# DEPARTMENT

# PLANS OF P

S

# S

## I-15; CORRI
## (ALPINE TO

LEN

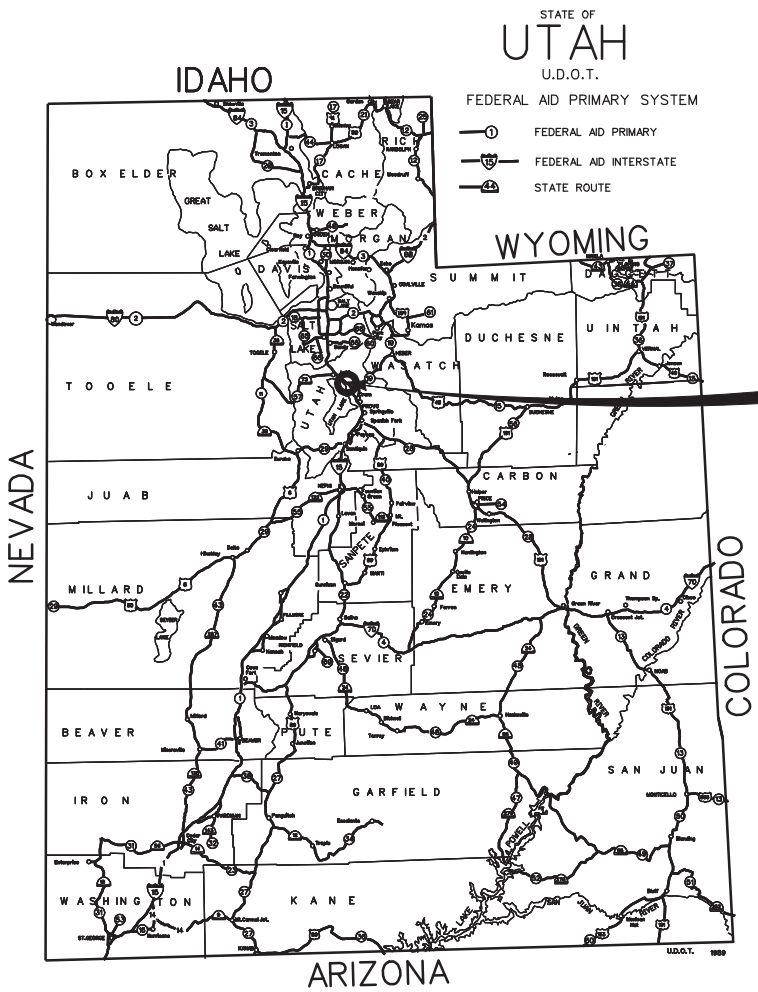


SP-15-6(52)241

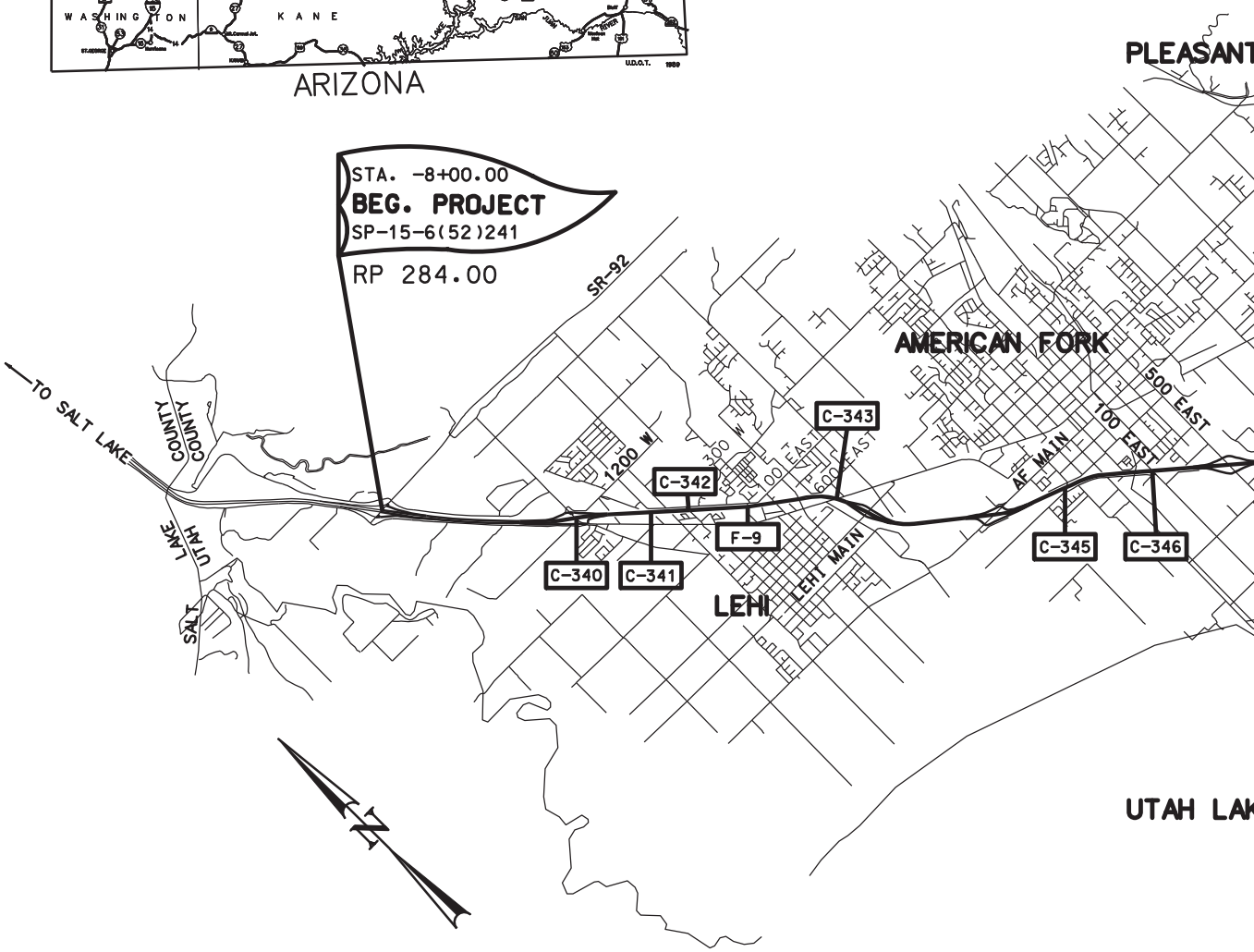


DGN File:IP_PWPdms\1715\4433-01-title.dgn

02-MAY-2005

| SHEET NO. |
| --- |
| 1 |

CSI INCH/POUND

# UTAH
# T OF TRANSPORTATION

## ROPOSED STATE ROAD

STATE PROJECT

## P-15-6(52)241

## OOR IN UTAH COUNTY
## UNIVERSITY PARKWAY)

UTAH COUNTY
WIDENING

NGTH 15.00 MILES

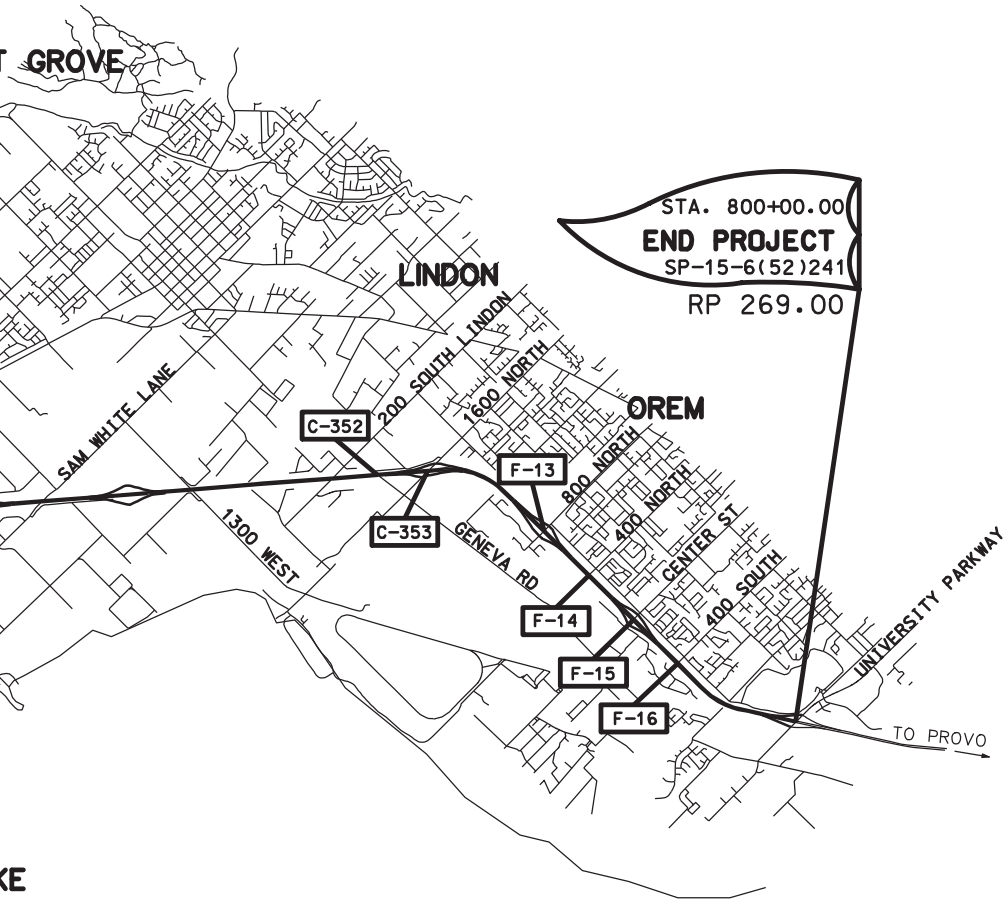


UTAH DEPARTMENT OF TRANSPORTATION

RECOMMENDED FOR APPROVAL _____ 2005

_____
PRECONSTRUCTION ENGINEER

RECOMMENDED FOR APPROVAL _____ 2005

_____
PROJECT MANAGER

APPROVAL _____ 2005

_____
REGION DIRECTOR

# TYPICAL

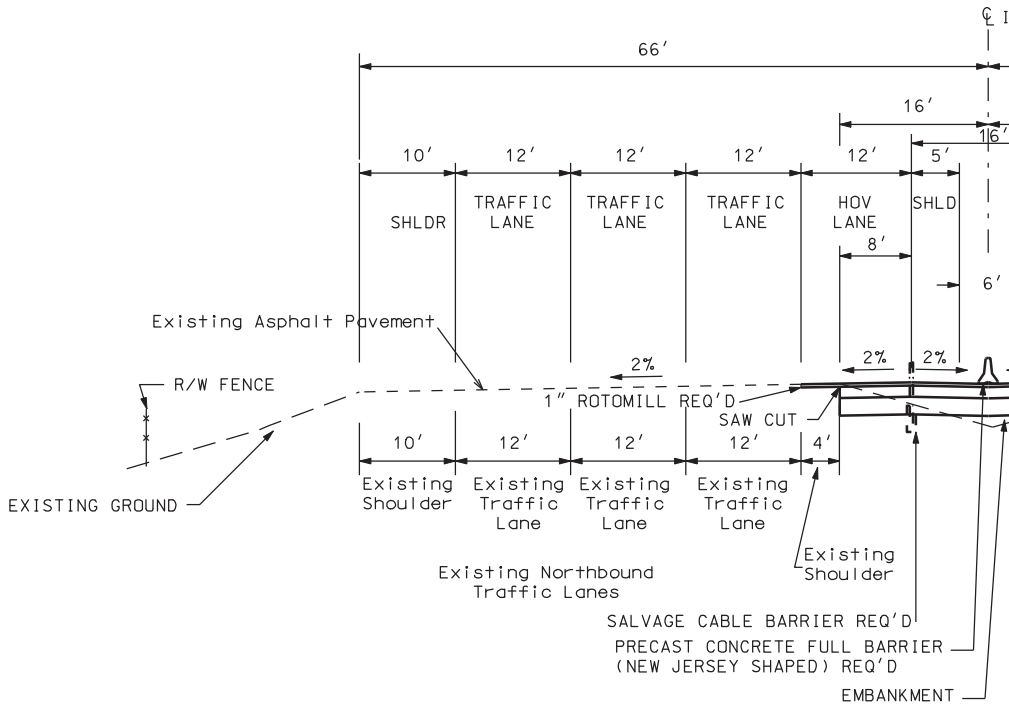


## I-15 TYPICAL

SEE TABLE 1 (TS-03
DESIGN SPEED

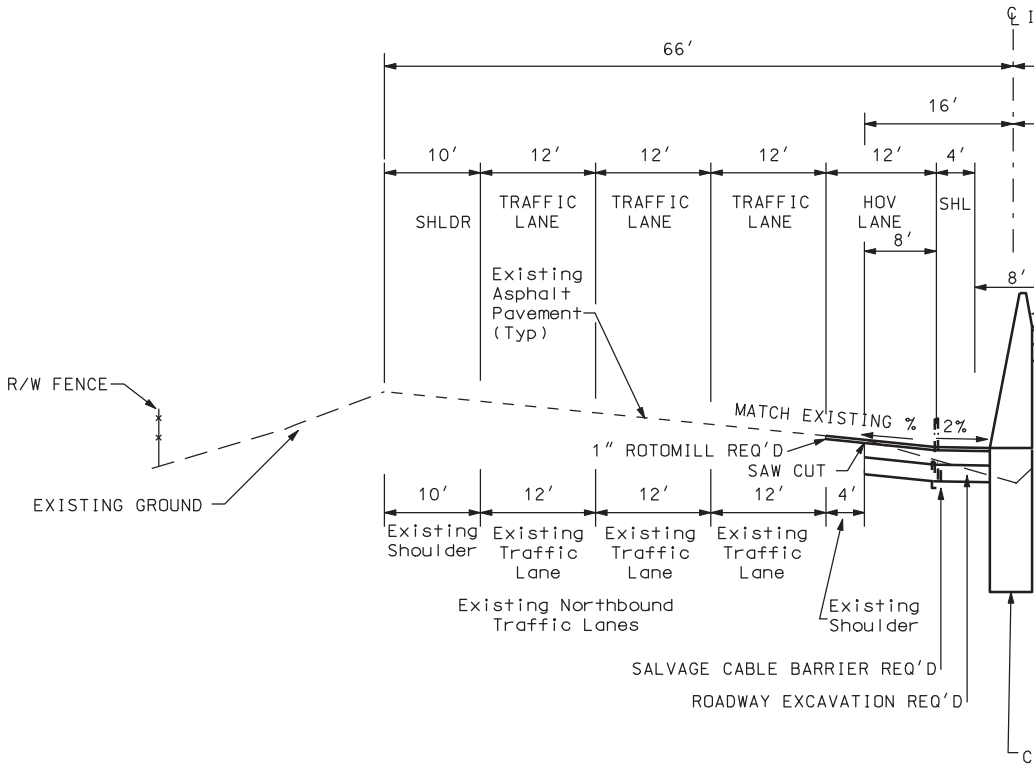


## I-15 TYPICAL

SUPERELEVA
SEE TABLE 1 (TS-03)
DESIGN SPEED

DGN File:IP_PWPdms11715\4433_TS-2.dgn

02-MAY-2005

# SECTIONS

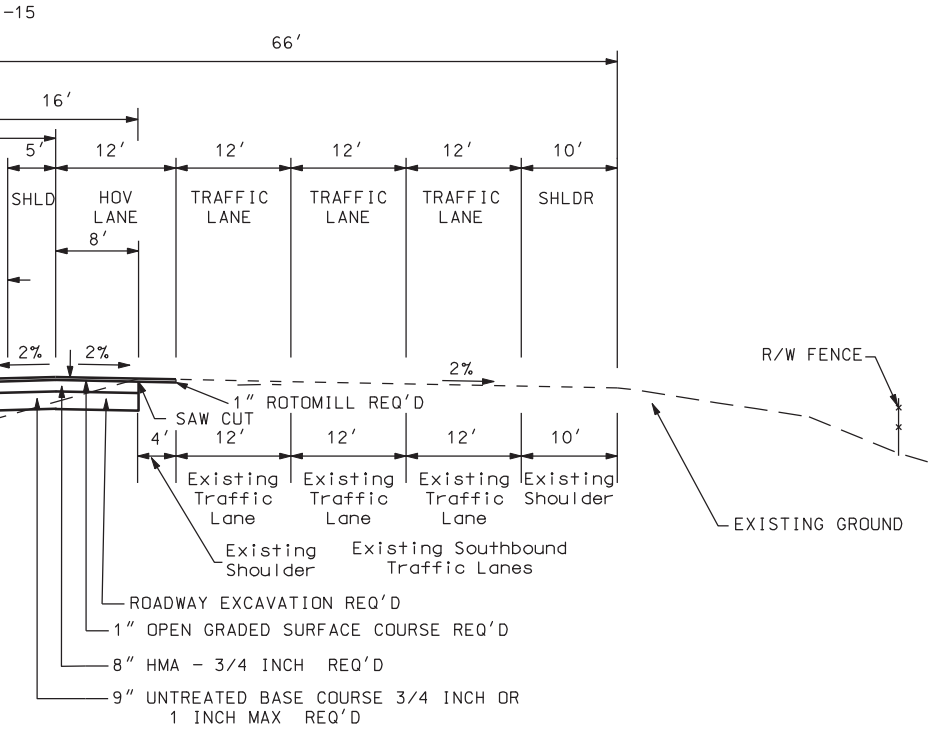


SECTION No.3

) FOR STATIONS
70 MPH

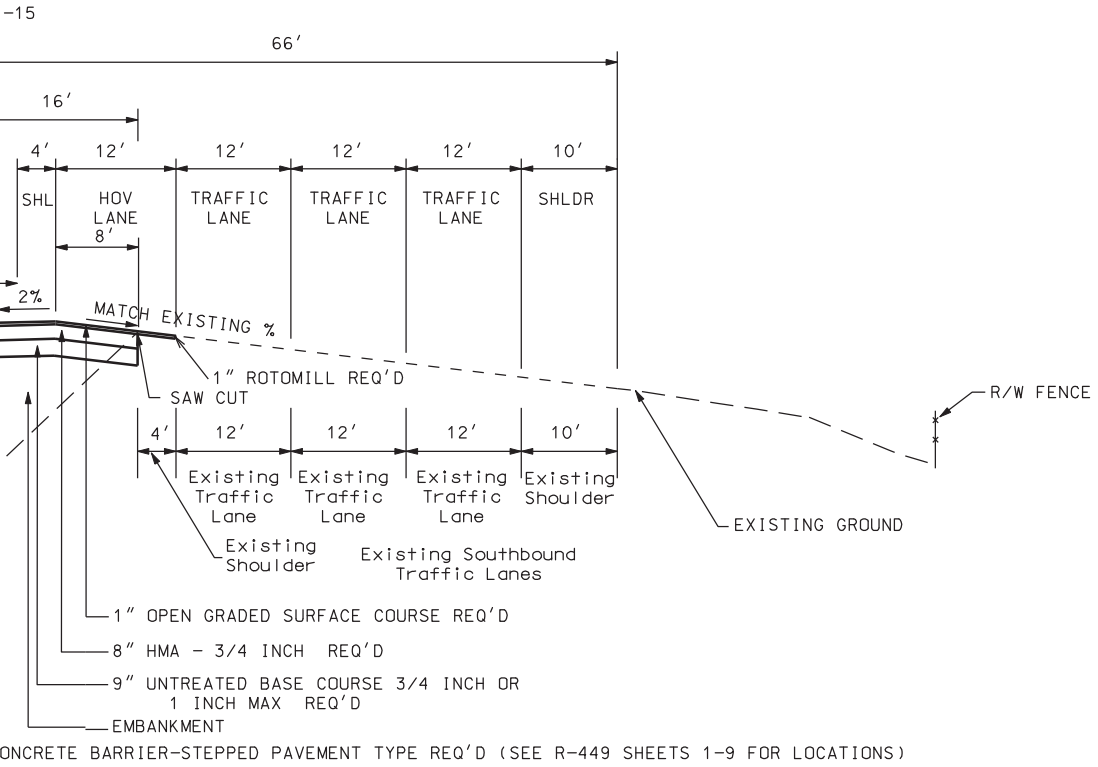


SECTION No.4

TION
FOR STATIONS
70 MPH

| NO. | DATE | DESIGN REV.BY | MAPS CORR.BY | PARCELS AFFECTED | REQUEST BY | REMARKS |
|---|---|---|---|---|---|---|
| | | | | | | |

ORIGINAL SUBMISSION FOR AUTHORIZATION

REVISIONS

UTAH DEPARTMENT OF TRANSPORTATION
REGION THREE
ROADWAY DESIGN

REVIEW
DATE
BY

DESIGN SMM 01-05 CHECK JAH 01-05
DRAWN SMM 01-05 CHECK JAH 01-05
QUANT. CHECK

APPROVAL RECOMM. DATE PROJECT DESIGN ENGINEER
APPROVED FOR USE BY UDOT DATE PRECONSTRUCTION ENGINEER

I-15: CORRIDOR
IN UTAH COUNTY
TYPICAL SECTION

PROJECT NUMBER SP-15-6(52)241

UTAH
COUNTY

SHEET NO. TS-02

# TYPICAL

| TYPICAL SECTION LOCATIONS | | | | | |
|---|---|---|---|---|---|
| TABLE 1 | | | | | |
| TYPICAL NUMBER | BEGIN STATION | END STATION | TYPICAL NUMBER | BEGIN STATION | END STATION |
| 1 | 010+00.00 | 021+10.00 | 4 | 296+98.00 | 317+45.00 |
| 2 | 021+10.00 | 070+74.00 | 3 | 317+45.00 | 332+95.16 |
| 1 | 070+74.00 | 076+34.00 | C-345 | 333+08.74 | 334+54.99 |
| 2 | 076+34.00 | 082+45.00 | 3 | 334+68.66 | 337+65.00 |
| TRANSITION | 082+45.00 | 094+82.00 | 4 | 337+65.00 | 356+97.00 |
| 4 | 094+82.00 | 096+59.00 | 3 | 356+97.00 | 373+75.64 |
| 3 | 096+59.00 | 101+06.37 | C-346 | 373+93.59 | 375+49.23 |
| C-340 | 101+23.38 | 103+14.62 | 3 | 375+67.43 | 580+47.49 |
| 3 | 103+31.73 | 103+99.00 | C-352 | 580+68.11 | 583+99.35 |
| 4 | 103+99.00 | 117+37.00 | 3 | 584+19.18 | 603+20.26 |
| 3 | 117+37.00 | 134+64.05 | C-353 | 603+41.47 | 605+55.91 |
| C-341 | 135+49.12 | 139+39.10 | 3 | 605+77.12 | 605+80.00 |
| 3 | 140+22.65 | 153+53.78 | 4 | 605+80.00 | 644+18.00 |
| C-342 | 153+72.90 | 155+27.89 | 3 | 644+18.00 | 662+19.72 |
| 3 | 155+46.92 | 177+37.00 | F-13 | 662+34.14 | 663+80.47 |
| 4 | 177+37.00 | 180+89.85 | 3 | 663+94.88 | 689+16.08 |
| F-9 | 181+03.57 | 182+17.90 | F-14 | 689+30.58 | 690+68.91 |
| 4 | 182+31.66 | 193+60.00 | 3 | 690+83.41 | 715+73.07 |
| 3 | 193+60.00 | 206+00.00 | F-15 | 715+87.58 | 717+25.91 |
| 4 | 206+00.00 | 219+78.86 | 3 | 717+40.41 | 743+77.26 |
| C-343 | 220+11.64 | 224+56.90 | F-16 | 742+49.16 | 743+63.49 |
| 4 | 224+88.05 | 235+05.00 | 3 | 743+77.26 | 754+58.00 |
| 3 | 235+05.00 | 238+25.00 | 4 | 754+58.00 | 778+10.00 |
| 4 | 238+25.00 | 266+98.00 | 3 | 778+10.00 | 799+13.00 |
| 3 | 266+98.00 | 296+98.00 | | | |

28-MAR-2005 DGN File: N:\Projects\4433_05\Sheet_Files\floodway_Design\4433_TS-3.dgn

# SECTIONS

| CAST-IN-PLACE CONSTANT SLOPE BARRIER | |
|---|---|
| TABLE 2 | |
| BEGIN STATION | END STATION |
| 108+40.00 | 112+80.00 |
| 182+60.00 | 193+60.00 |
| 206+00.00 | 210+00.00 |
| 216+80.00 | 219+55.00 |
| 225+40.00 | 232+40.00 |
| 240+20.00 | 244+80.00 |
| 256+20.00 | 259+00.00 |
| 262+20.00 | 266+00.00 |
| 299+20.00 | 301+40.00 |
| 313+80.00 | 316+80.00 |
| 338+80.00 | 342+20.00 |
| 351+20.00 | 352+40.00 |
| 606+00.00 | 611+20.00 |
| 637+00.00 | 641+40.00 |
| 757+40.00 | 760+20.00 |
| 761+00.00 | 764+40.00 |
| 770+20.00 | 772+13.00 |
| 773+10.00 | 773+40.00 |
| 775+40.00 | 777+00.00 |

NOTE: CAST-IN-PLACE CONSTANT SLOPE BARRIER TIES INTO CONCRETE BARRIER - STEPPED PAVEMENT TYPE

| NO. | DATE | DESIGN REV. BY | MAPS CORR. BY | PARCELS AFFECTED | REQUEST BY | REMARKS |
|---|---|---|---|---|---|---|
| | | | | | | ORIGINAL SUBMISSION FOR AUTHORIZATION |

DATE REVISIONS

UTAH DEPARTMENT OF TRANSPORTATION
REGION THREE
ROADWAY DESIGN

APPROVAL RECOMM. 2/5 DATE PROJECT DESIGN ENGINEER
APPROVED FOR USE BY UDOT 2/6 DATE PRECONSTRUCTION ENGINEER

DESIGN SMM 01-05 CHECK JAH 01-05 REVIEW
DRAWN SMM 01-05 CHECK JAH 01-05 DATE
QUANT. CHECK BY

I-15: CORRIDOR
IN UTAH COUNTY
TYPICAL SECTION

PROJECT NUMBER SP-15-6(52)241

UTAH
COUNTY

SHEET NO. TS-03

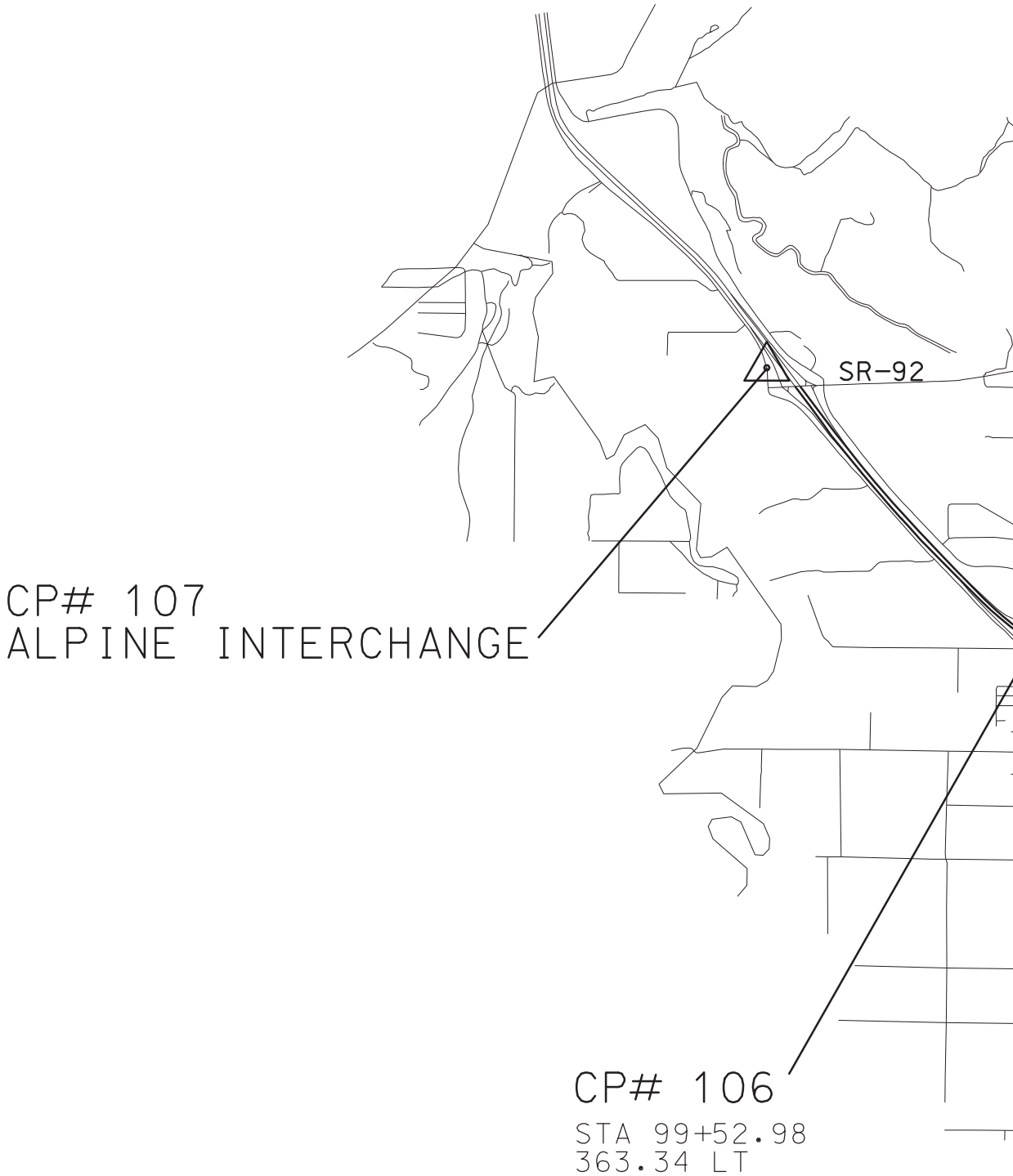


| CP # | NORTHING | EASTING | ELEVATION | TYP |
|---|---|---|---|---|
| 105 | 110141.648 | 185965.349 | 4506.737 | PK NAIL |
| 106 | 124030.856 | 172391.027 | 4519.120 | PK NAIL |
| 107 | 130733.548 | 165407.372 | 4569.400 | PK NAIL |

DGN File:IP_PWPcdms1715\DT-01.dgn
02-MAY-2005

# SURVEY CONTROL

CP# 105
STA 296+28.33
138.47 RT

| E |
|---|
| |
| |
| |

| NO. | DATE | DESIGN REV.BY | MAPS CORR.BY | PARCELS AFFECTED | REQUEST BY | REMARKS |
|---|---|---|---|---|---|---|
| | | | | | | |

ORIGINAL SUBMISSION FOR AUTHORIZATION

REVISIONS

UTAH DEPARTMENT OF TRANSPORTATION
REGION THREE
ROADWAY DESIGN

REVIEW

DESIGN SMM 01-05 CHECK JAH 01-05 DATE
DRAWN SMM 01-05 CHECK JAH 01-05 BY
QUANT. CHECK

APPROVAL RECOMM. DATE PROJECT DESIGN ENGINEER
APPROVED FOR USE BY UDOT DATE PRECONSTRUCTION ENGINEER

I-15: CORRIDOR
IN UTAH COUNTY
DETAIL SHEET

PROJECT NUMBER SP-15-6(52)241

UTAH
COUNTY

SHEET NO. DT-01

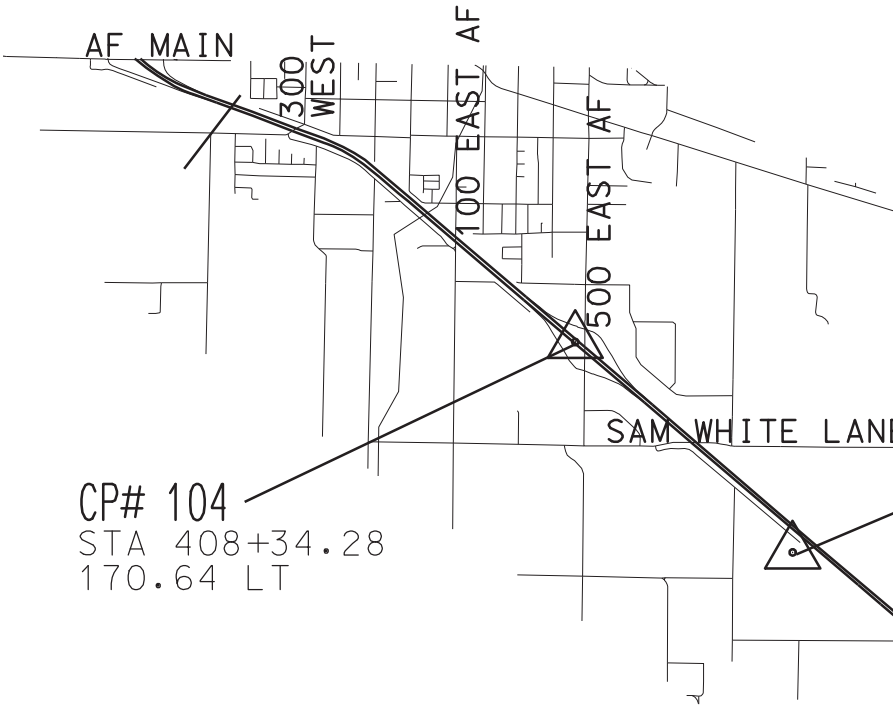


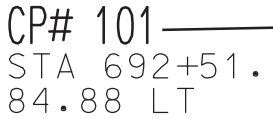


| CP # | NORTHING | EASTING | ELEVATION | T |
|---|---|---|---|---|
| 100 | 76106.143 | 212299.840 | 4506.418 | REBAR/PL |
| 101 | 83370.405 | 212133.229 | 4574.408 | PK NAIL |
| 102 | 91682.257 | 210340.048 | 4535.435 | REBAR/PL |
| 103 | 100000.128 | 199999.928 | 4489.537 | PK NAIL |
| 104 | 104385.772 | 195469.027 | 4509.401 | PK NAIL |

DGN File:IP_PWPdms1715\DT-02.dgn
02-MAY-2005

# SURVEY CONTROL

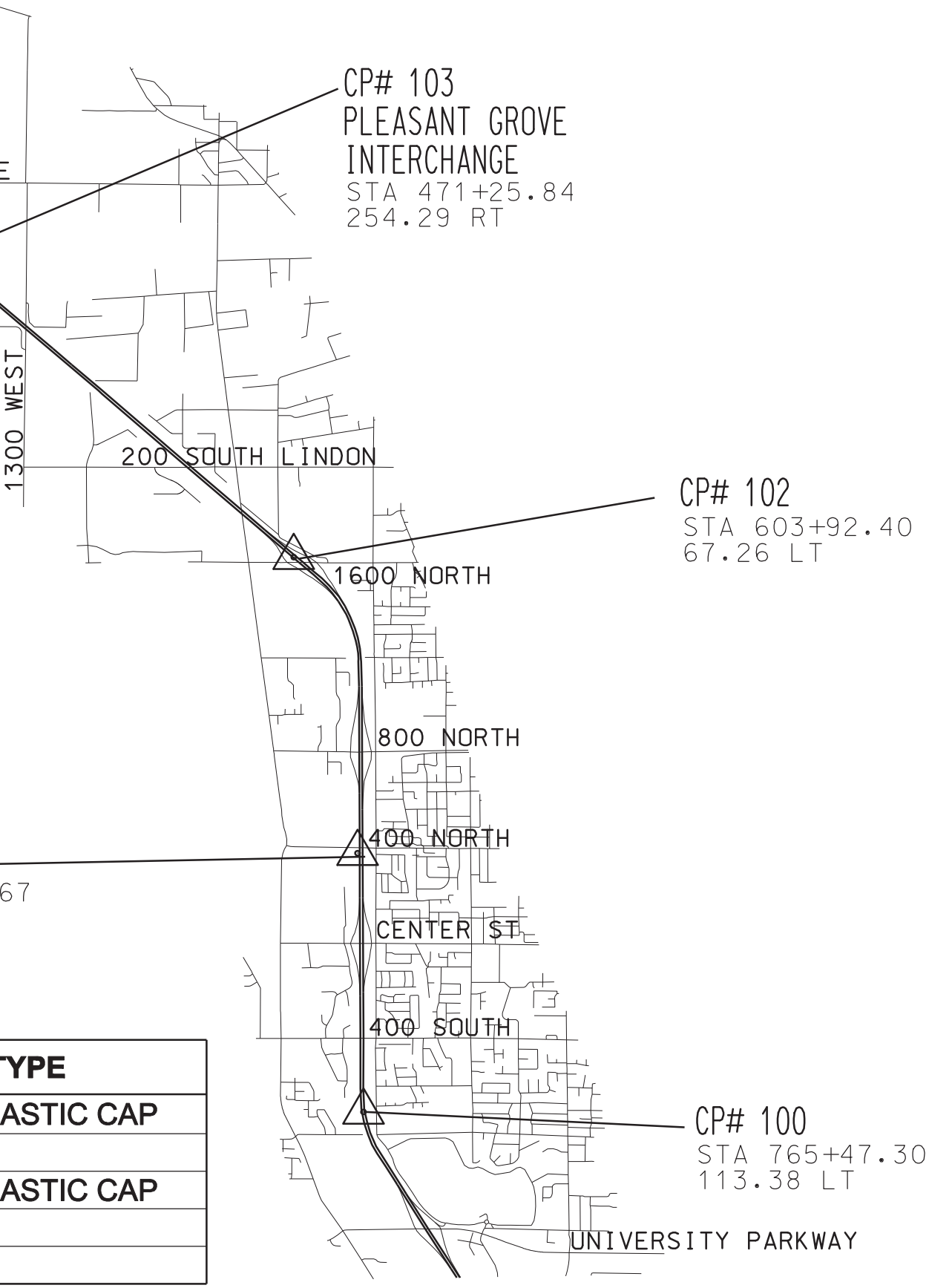


| TYPE |
|---|
| ASTIC CAP |
| |
| ASTIC CAP |
| |
| |

| NO. | DATE | DESIGN REV.BY | MAPS CORR.BY | PARCELS AFFECTED | REQUEST BY | REMARKS |
|---|---|---|---|---|---|---|
| | | ORIGINAL SUBMISSION FOR AUTHORIZATION | | | | |

REVISIONS

UTAH DEPARTMENT OF TRANSPORTATION
REGION THREE
ROADWAY DESIGN

REVIEW
DATE
BY

DESIGN SMM 01-05 CHECK JAH 01-05
DRAWN SMM 01-05 CHECK JAH 01-05
QUANT. CHECK

APPROVAL RECOMM. DATE PROJECT DESIGN ENGINEER
APPROVED FOR USE BY UDOT DATE PRECONSTRUCTION ENGINEER

I-15: CORRIDOR
IN UTAH COUNTY
DETAIL SHEET

PROJECT NUMBER SP-15-6(52)241

UTAH
COUNTY

SHEET NO. DT-02

Ⓐ PAVEMENT MARKING PAINT REQ'D (4" SOLID WHITE)

Ⓑ PAVEMENT MARKING PAINT REQ'D (4" SKIP WHITE)

Ⓒ PAVEMENT MARKING PAINT REQ'D (4" SOLID YELLOW)

Ⓓ PAVEMENT MARKING PAINT REQ'D (8" SOLID WHITE)

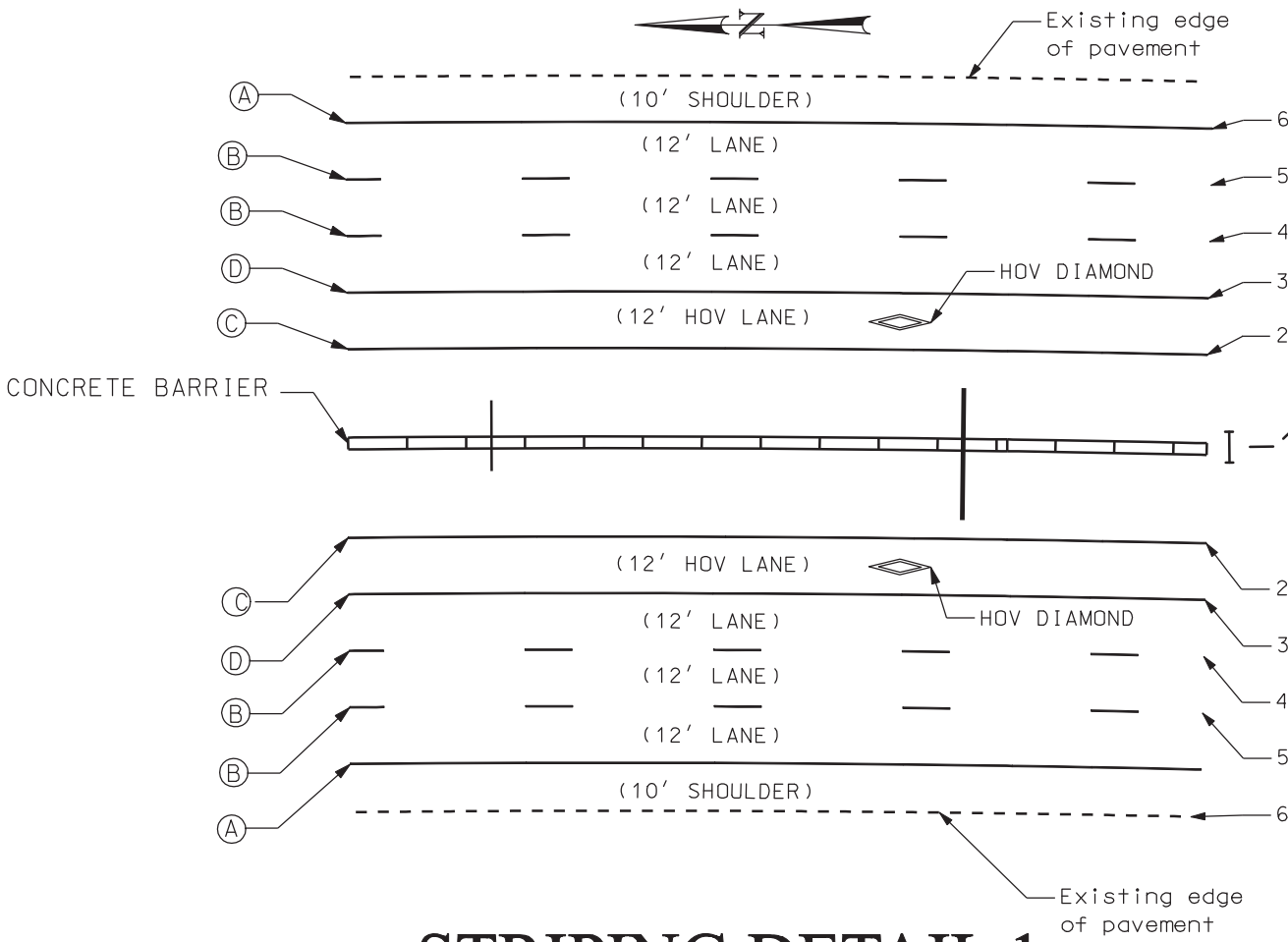


# STRIPING DETAIL 1

STA 10+00 TO 82+45
Tapers from 82+45 to 94+82

CONCRETE

NOTE: All dimensions are from centerline.

Taper from Detail 1 to Detail 2, Sta 82+45 to 94+82

See Sheet RD-0 for Paint Striping station -8+00 to 10+00

DGN File:IP_PWPdms11715\DT-03.dgn
02-MAY-2005

PAVEMENT MESSAGE (PREFORMED THERMOPLASTIC) REQ'D
HOV DIAMOND
SPACED EVERY 2640 FT

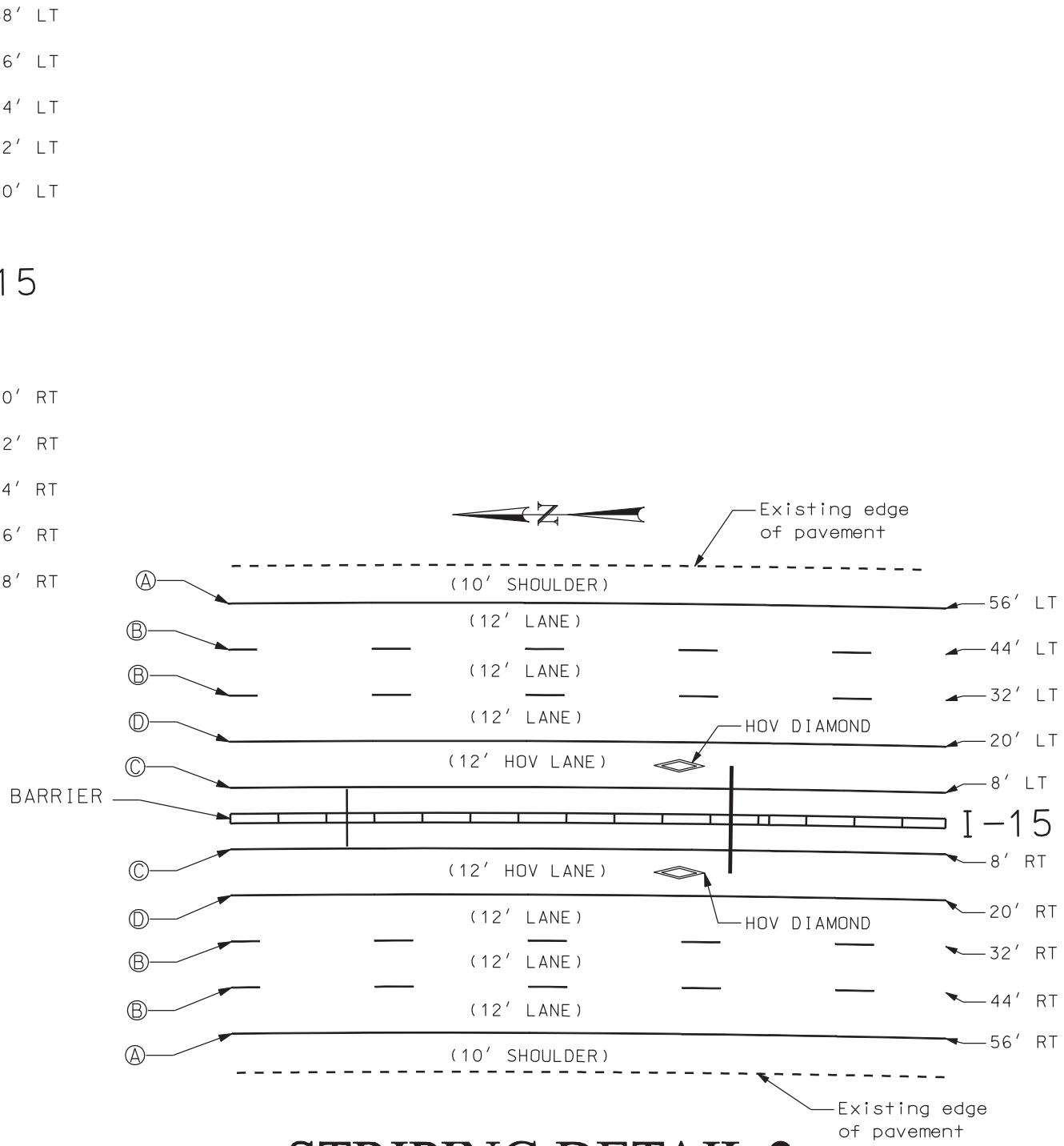


# STRIPING DETAIL 2

STA 94+82 TO 799+13

| NO. | DATE | DESIGN REV.BY | MAPS CORR.BY | PARCELS AFFECTED | REQUEST BY | REMARKS |
|---|---|---|---|---|---|---|
| | | ORIGINAL SUBMISSION FOR AUTHORIZATION | | | | |

REVISIONS

UTAH DEPARTMENT OF TRANSPORTATION
REGION THREE
ROADWAY DESIGN

DESIGN SMM 01-05 CHECK JAH 01-05 REVIEW
DRAWN SMM 01-05 CHECK JAH 01-05 DATE
QUANT. CHECK BY

APPROVAL RECOMM. DATE PROJECT DESIGN ENGINEER
APPROVED FOR USE BY UDOT DATE PRECONSTRUCTION ENGINEER

I-15: CORRIDOR
IN UTAH COUNTY
DETAIL SHEET

PROJECT NUMBER SP-15-6(52)241

UTAH
COUNTY

SHEET NO. DT-03

# RECONSTRUC

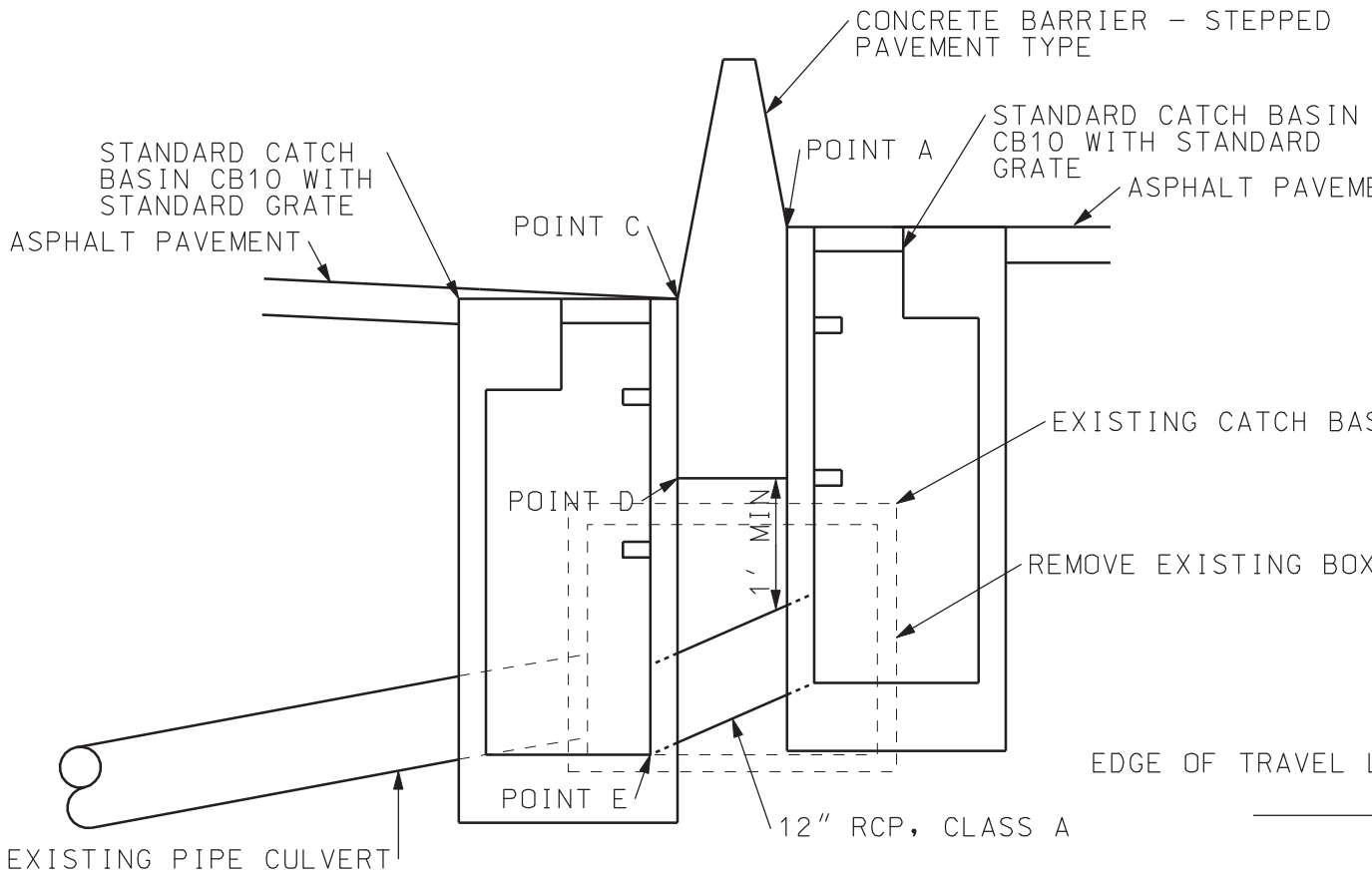


**SECTION B-B**

RECTANGULA

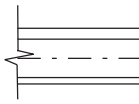

EDGE OF

# CT CATCH BASIN TYPE A

NOTE: Cut pipe flush with internal wall on Section B-B

ENT

SIN

CULVERT

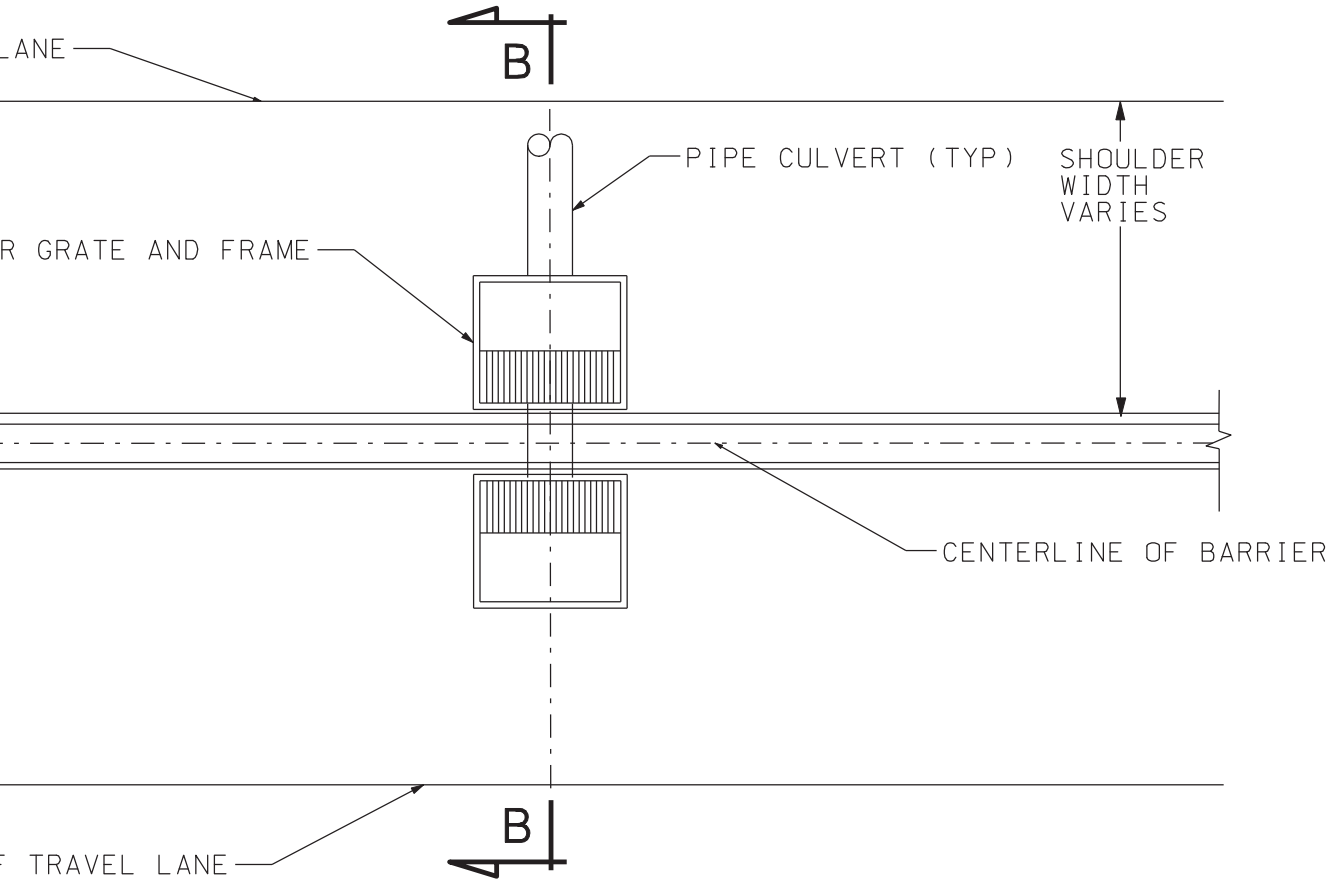


## PLAN LAYOUT

| NO. | DATE | DESIGN REV. BY | MAPS CORR. BY | PARCELS AFFECTED | REQUEST BY | REMARKS |
|---|---|---|---|---|---|---|
| | | ORIGINAL SUBMISSION FOR AUTHORIZATION | | | | |

REVISIONS

UTAH DEPARTMENT OF TRANSPORTATION
REGION THREE
ROADWAY DESIGN

REVIEW

DESIGN SMM 01-05 CHECK JAH 01-05 DATE
DRAWN SMM 01-05 CHECK JAH 01-05 DATE
QUANT. CHECK BY

APPROVAL RECOMM. DATE PROJECT DESIGN ENGINEER
APPROVED FOR USE BY UDOT DATE PRECONSTRUCTION ENGINEER

I-15; CORRIDOR
IN UTAH COUNTY
DETAIL SHEET

PROJECT NUMBER SP-15-6(52)241

UTAH
COUNTY

SHEET NO. DT-04

NOTES:

1. SEE ROADWAY PLAN SHEETS FOR SIGN LOCATIONS.

2. SEE STD DWG SN 7 & SN 11 FOR INSTALLATION DETAILS.

3. REFER TO FHWA STANDARD HIGHWAY SIGNS, 2004 EDITION FOR NEW LAYOUT STANDARDS FOR EXIT ONLY PANEL.

LEGEND:

| | |
|---|---|
| W/G | WHITE ON GREEN |
| BK/Y | BLACK ON YELLOW |
| BK/W | BLACK ON WHITE |
| W/BK | WHITE ON BLACK |
| BK/W/R | BLACK ON WHITE WITH RED |
| C | SERIES 'C' LETTERS |
| D | SERIES 'D' LETTERS |
| E | SERIES 'E' LETTERS |
| EM | SERIES 'EM' LETTERS |

SIGNING LEGEND:

10-2 ← SIGN NUMBER

SIGNING SHEET NUMBER

92-2 STA 737+00
(OVERHEAD SIGN STRUCTURE G-319C)
SIGN TYPE P-1, 134.5" X 156.0" REQ'D
W/G

02-MAY-2005 DGN File:IP_PWPdms11715\DT-06.dgn

NOTES:

1. SEE STD DWG PV6.

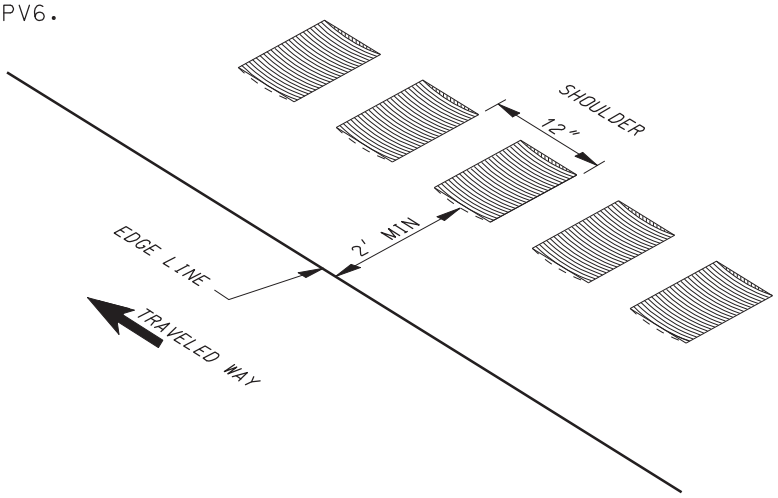


TYPICAL SHOULDER INSTALLATION
RIGHT SHOULDER DETAIL

94-1 STA 759+00
(OVERHEAD SIGN STRUCTURE, G-319D)
SIGN TYPE P-1, 146.5" X 156.0" REQ'D
W/G

/Y. SEE NOTE 3

| NO. | DATE | DESIGN REV.BY | MAPS CORR.BY | PARCELS AFFECTED | REQUEST BY | REMARKS |
|---|---|---|---|---|---|---|
| | | ORIGINAL SUBMISSION FOR AUTHORIZATION | | | | |

REVISIONS

UTAH DEPARTMENT OF TRANSPORTATION
REGION THREE
ROADWAY DESIGN

REVIEW

DESIGN SMM 01-05 CHECK JAH 01-05 DATE
DRAWN SMM 01-05 CHECK JAH 01-05 BY
QUANT. CHECK

APPROVAL RECOMM. DATE PROJECT DESIGN ENGINEER
APPROVED FOR USE BY UDOT DATE PRECONSTRUCTION ENGINEER

I-15: CORRIDOR
IN UTAH COUNTY
DETAIL SHEET

PROJECT NUMBER SP-15-6(52)241

UTAH
COUNTY

SHEET NO. DT-05

# STORM S

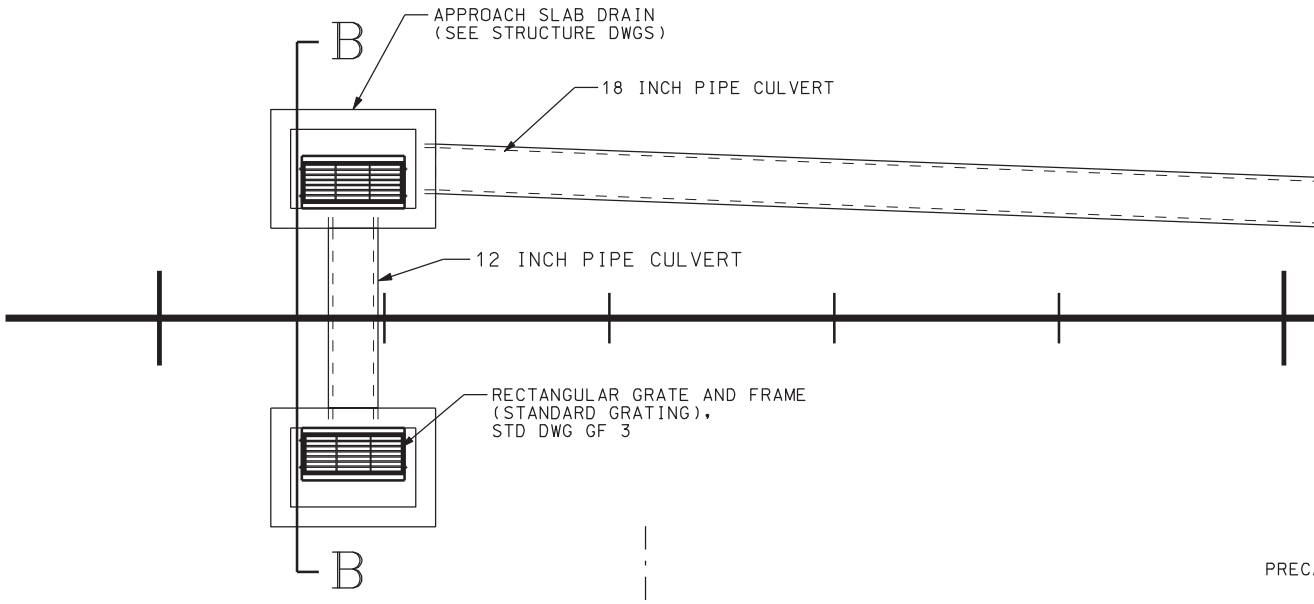


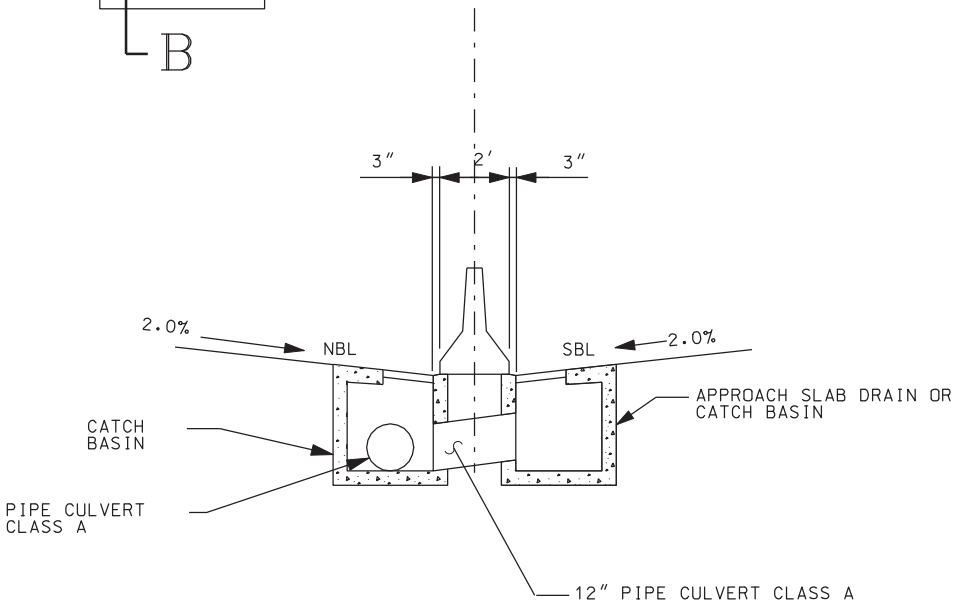


PREC

CB10 CAT

12

## SECTION B-B

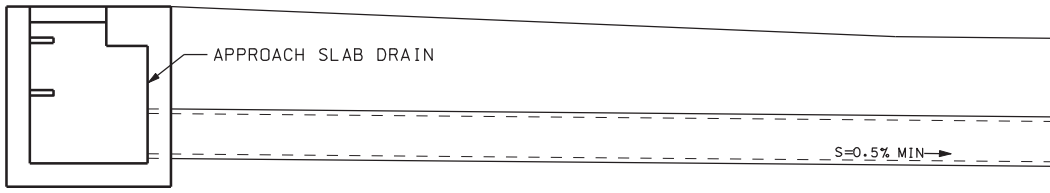


## GENERAL NOTES:

1. ALL DIMENSIONS ARE IN FEET UNLESS OTHERWISE NOTED.
2. MANHOLE BASE AND ALL SECTIONS SHALL BE PRECAST TO CONFORM TO ASTM C478.
3. BOX PLACEMENT SHOWN IN B-B MAY BE SKEWED.

DETAIL

DGN File:IP_PWPsdms1715\DT-06.dgn

02-MAY-2005

# SUMP DETAILS

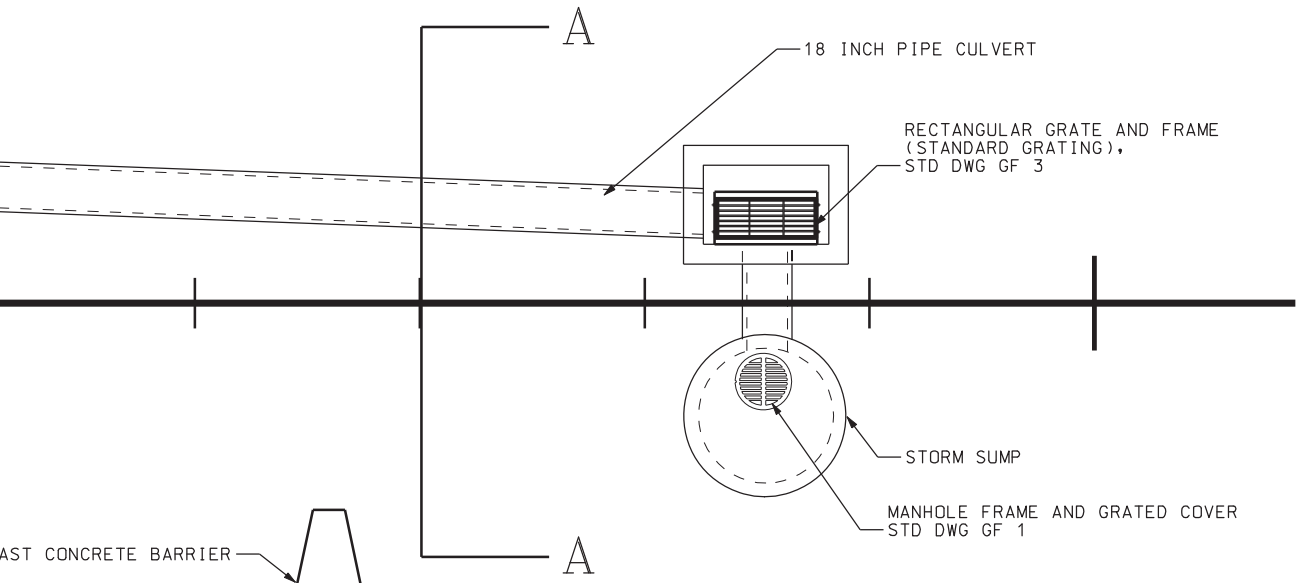


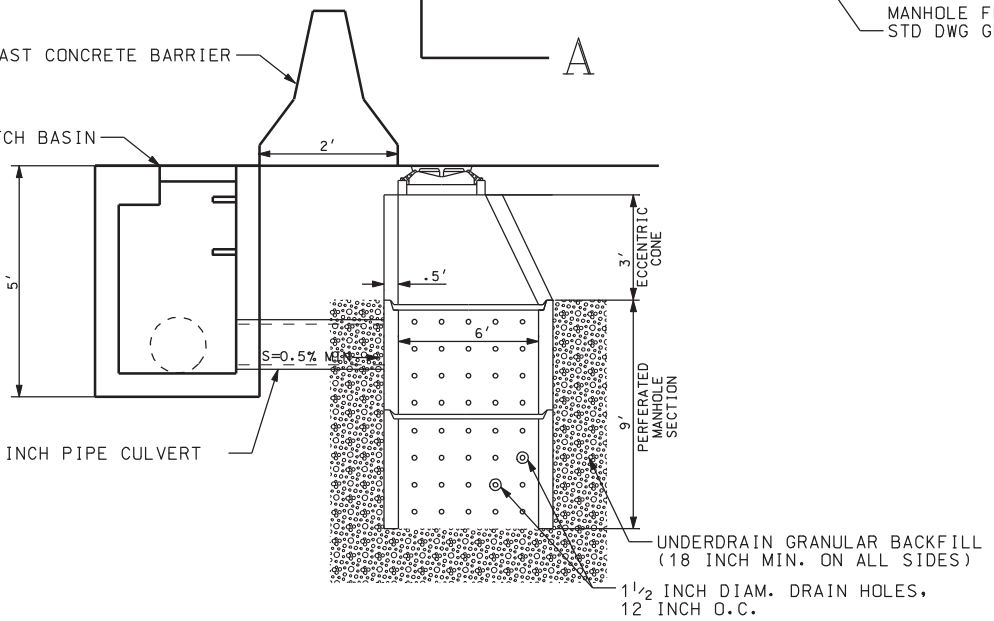


## SECTION A-A

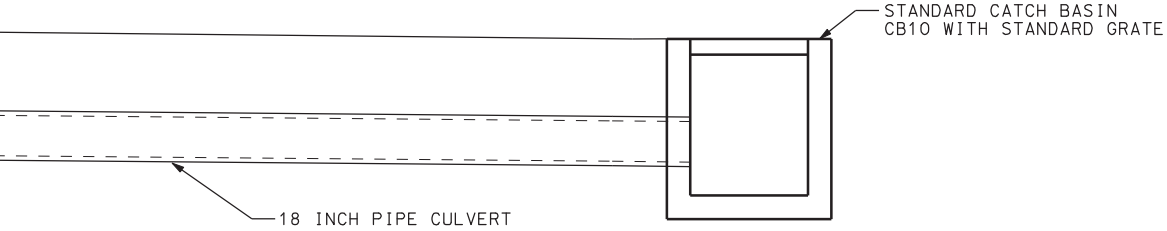


A

| NO. | DATE | DESIGN REV.BY | MAPS CORR.BY | PARCELS AFFECTED | REQUEST BY | REMARKS |
|---|---|---|---|---|---|---|
| | | ORIGINAL SUBMISSION FOR AUTHORIZATION | | | | |

REVISIONS

UTAH DEPARTMENT OF TRANSPORTATION
REGION THREE
ROADWAY DESIGN

REVIEW
DATE
BY

DESIGN SMM 01-05 CHECK JAH 01-05
DRAWN SMM 01-05 CHECK JAH 01-05
QUANT. CHECK

APPROVAL RECOMM. DATE PROJECT DESIGN ENGINEER
APPROVED FOR USE BY UDOT DATE PRECONSTRUCTION ENGINEER

I-15; CORRIDOR
IN UTAH COUNTY
DETAIL SHEET

PROJECT NUMBER SP-15-6(52)241

UTAH
COUNTY

SHEET NO. DT-06

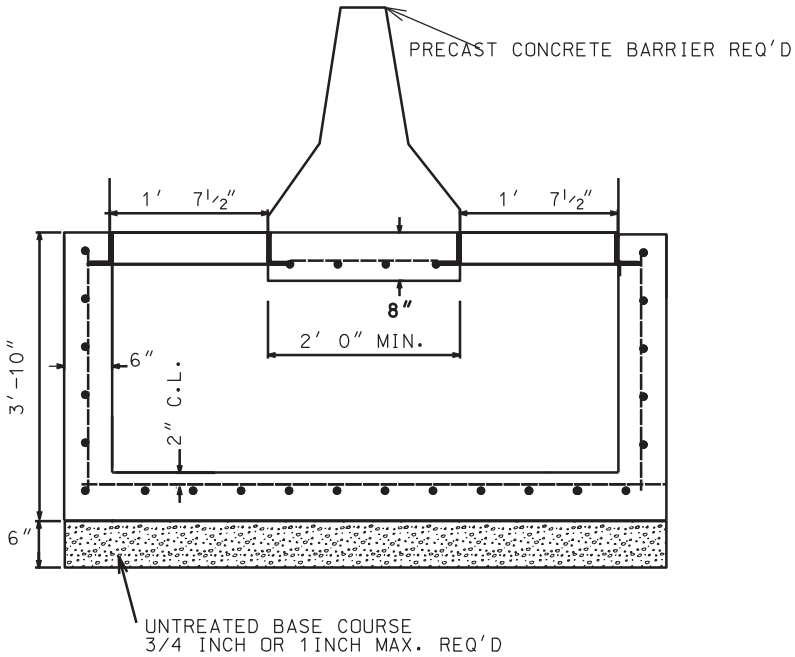


SECTION A-A

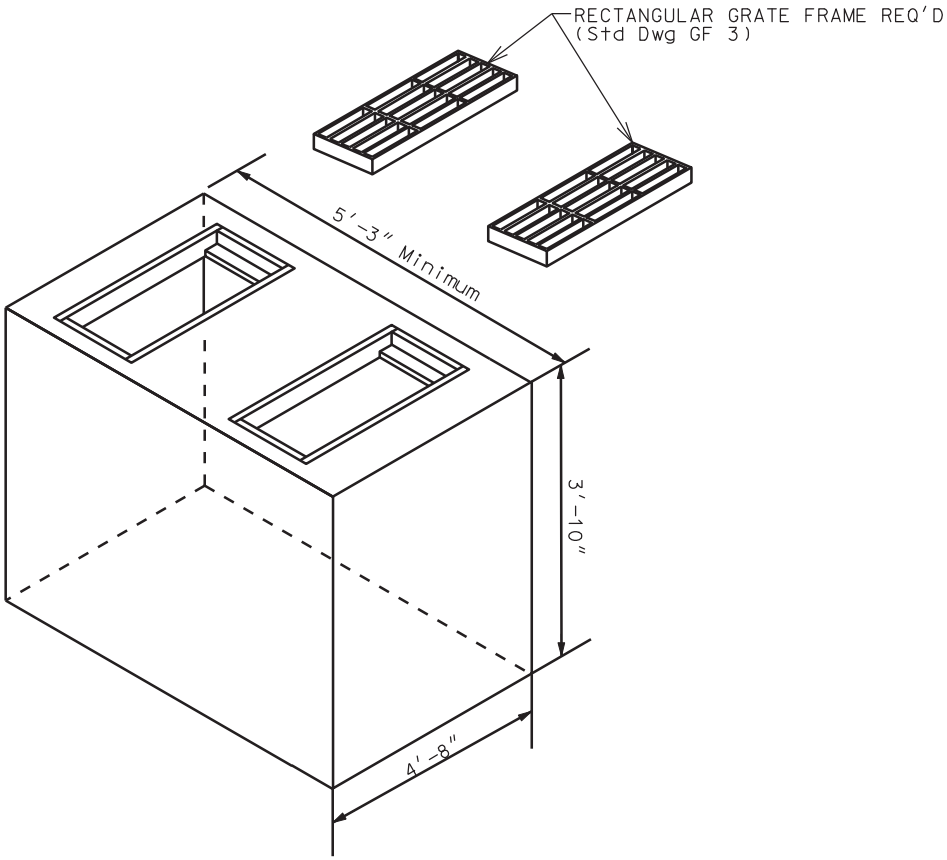


DGN File:IP_PWPsdms11715\DT-07.dgn
02-MAY-2005

GENERAL NOTES

1. COAT ALL REINFORCING STEEL DEFORMED BILLET-STEEL BARS CONFORMING TO AASHTO DESIGNATION M 31. GRADE 60.
2. USE TYPE II CEMENT (LOW ALKALI) UNLESS SPECIFIED OTHERWISE.
3. CHAMFER $^3/_4$" ALL EXPOSED CONCRETE CORNERS
4. USE CONCRETE CLASS AA(AE) FOR ALL CAST-IN-PLACE CONCRETE EXCEPT WHERE SPECIFIED OTHERWISE.
5. COVER TO REINFORCING 2".
6. USE STRUCTURAL CARBON STEEL FOR STRUCTURAL STEEL GRATING CONFORMING TO AASHTO DESIGNATION M 270. GRADE 36 (ASTM A 709. GRADE 36)
7. SEE STD DWG GF 3 FOR DRAWING OF FRAME AND GRATE COVER DETAIL.
8. ALL REINFORCING BARS TO BE # 4

DESIGN DATA

HS-20 OR INTERSTATE ALTERNATE LOADING IN ACCORDANCE WITH CURRENT AASHTO AND INTERIM SPECIFICATIONS.

CAST-IN-PLACE STRUCTURAL CONCRETE: fc = 1,400 psi. n = 8

REINFORCED STEEL: fs = 24,000 psi.

STRUCTURAL STEEL: fs = 20,000 psi.

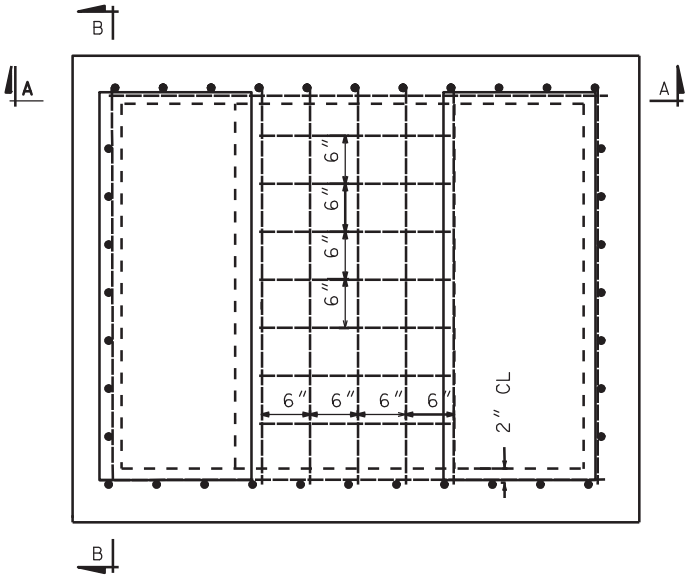


PLAN

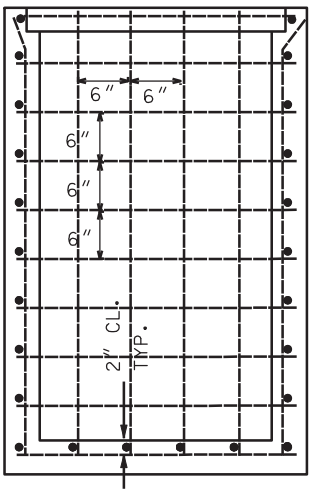


SECTION B-B

| NO. | DATE | DESIGN REV. BY | MAPS CORR. BY | PARCELS AFFECTED | REQUEST BY | REMARKS |
|---|---|---|---|---|---|---|
| | | ORIGINAL SUBMISSION FOR AUTHORIZATION | | | | |

REVISIONS

UTAH DEPARTMENT OF TRANSPORTATION
REGION THREE
ROADWAY DESIGN

DESIGN SMM 01-05 CHECK JAH 01-05 REVIEW
DRAWN SMM 01-05 CHECK JAH 01-05 DATE
QUANT. CHECK BY

APPROVAL RECOMM. DATE PROJECT DESIGN ENGINEER
APPROVED FOR USE BY UDOT DATE PRECONSTRUCTION ENGINEER

I-15; CORRIDOR
IN UTAH COUNTY
DETAIL SHEET

PROJECT NUMBER SP-15-6(52)241

UTAH
COUNTY

SHEET NO. DT-07

Ⓐ PAVEMENT MARKING PAINT REQ'D (4" SOILD YELLOW LINE)
Ⓑ PAVEMENT MARKING PAINT REQ'D (8" SOLID WHITE LINE)
Ⓒ PAVEMENT MARKING PAINT REQ'D (4" SKIP WHITE LINE)
Ⓓ PAVEMENT MARKING PAINT REQ'D (4" SOLID WHITE LINE)
Ⓔ PAVEMENT MARKING PAINT REQ'D (8" SOILD WHITE LI
Ⓕ PAVEMENT MARKING PAINT REQ'D (8" LANE DROP WHIT

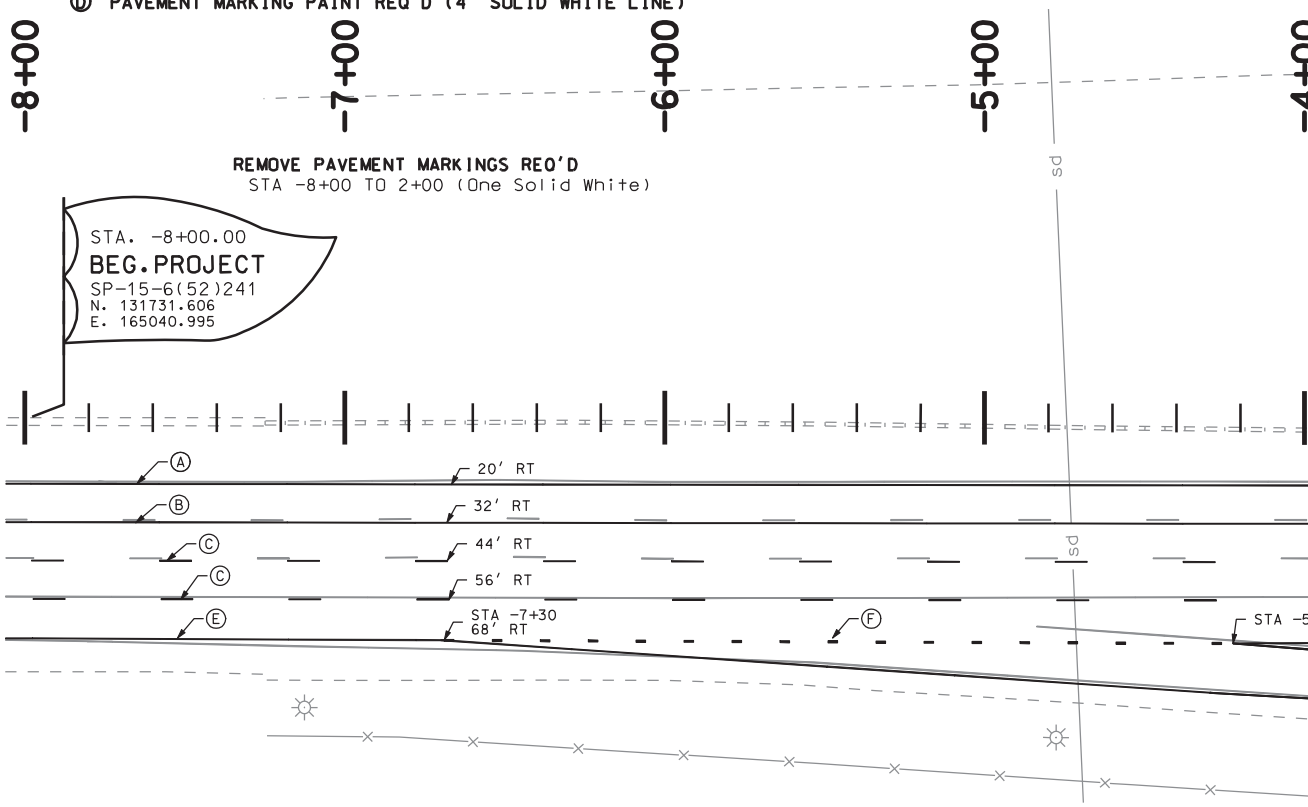


REMOVE PAVEMENT MARKINGS REQ'D
STA -8+00 TO 2+00 (One Solid White)

REMOVE PAVEMENT MARKINGS REQ'D
STA 2+00 to 16+60 (4 Solid, 4 Skip)

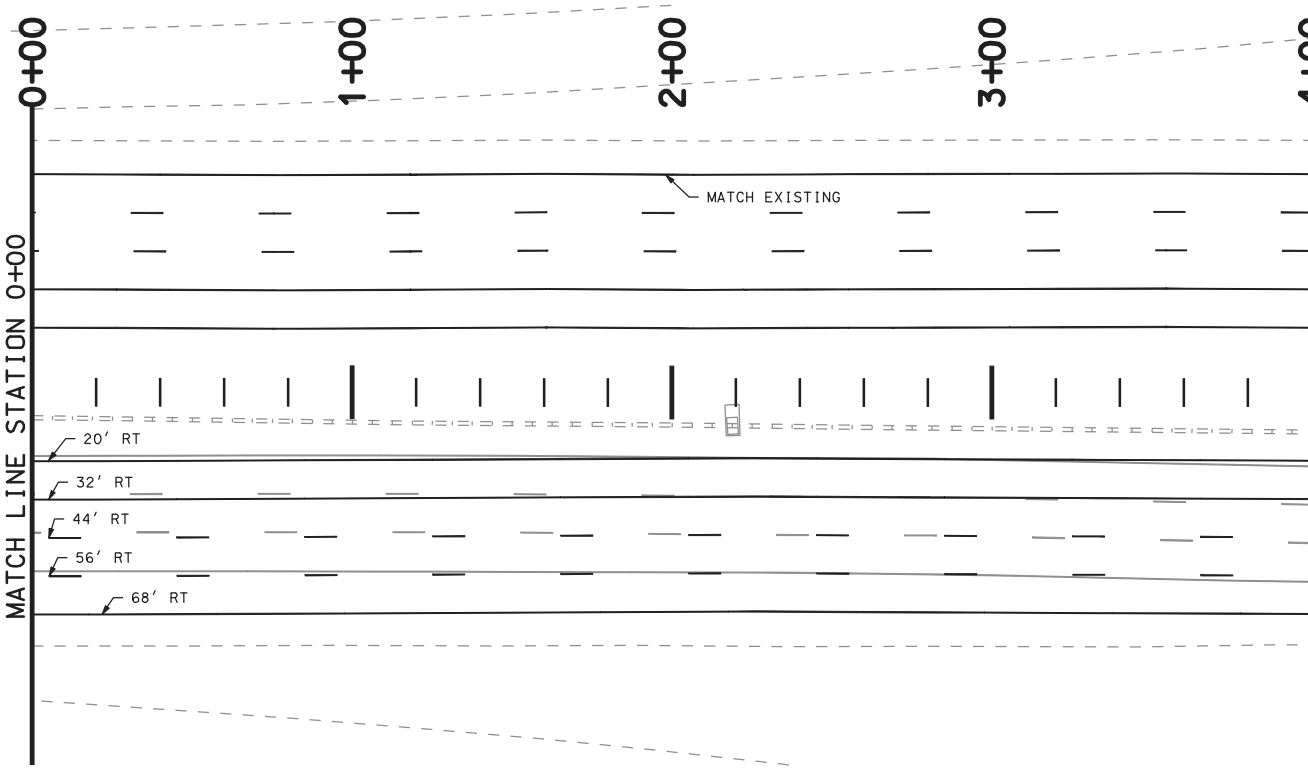


DGN File:IP_PWPsdms1715\RD-000.dgn

02-MAY-2005

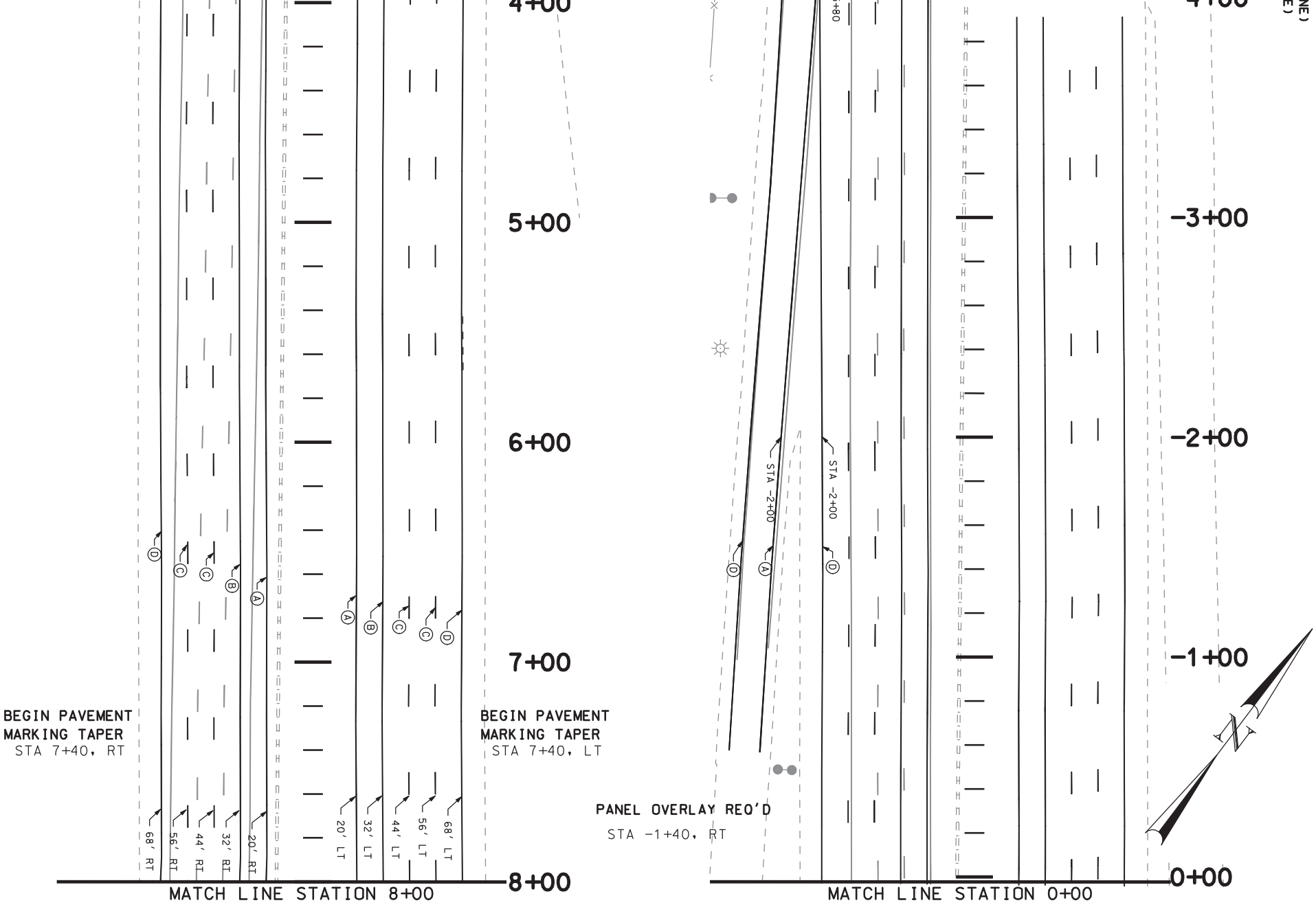


| | | | | | | |
|---|---|---|---|---|---|---|
| SHEET NO. RD-0 | UTAH COUNTY | I-15; CORRIDOR IN UTAH COUNTY PLAN SHEET | UTAH DEPARTMENT OF TRANSPORTATION<br>REGION THREE -- OREM CITY, UTAH<br>ROADWAY DESIGN | | | |
| | | PROJECT NUMBER SP-15-6(52)241 | APPROVAL RECOMM. DATE PROJECT DESIGN ENGINEER | DESIGN JAH 02-05 | CHECK SMM 02-05 | REVIEW |
| | | | APPROVED FOR USE BY UDOT DATE PRECONSTRUCTION ENGINEER | DRAWN JAH 02-05 | CHECK SMM 02-05 | DATE |
| | | | | QUANT. JAH 02-05 | CHECK SMM 02-05 | BY |

| NO. | DATE | DESIGN REV. BY | MAPS CORR. BY | PARCELS AFFECTED | REQUEST BY | REMARKS |
|---|---|---|---|---|---|---|
| | | ORIGINAL SUBMISSION FOR AUTHORIZATION | | | | |
| DATE | | REVISIONS | | | | |

SEE SHEET RD-00
MATCH LINE STATION 8+00.000

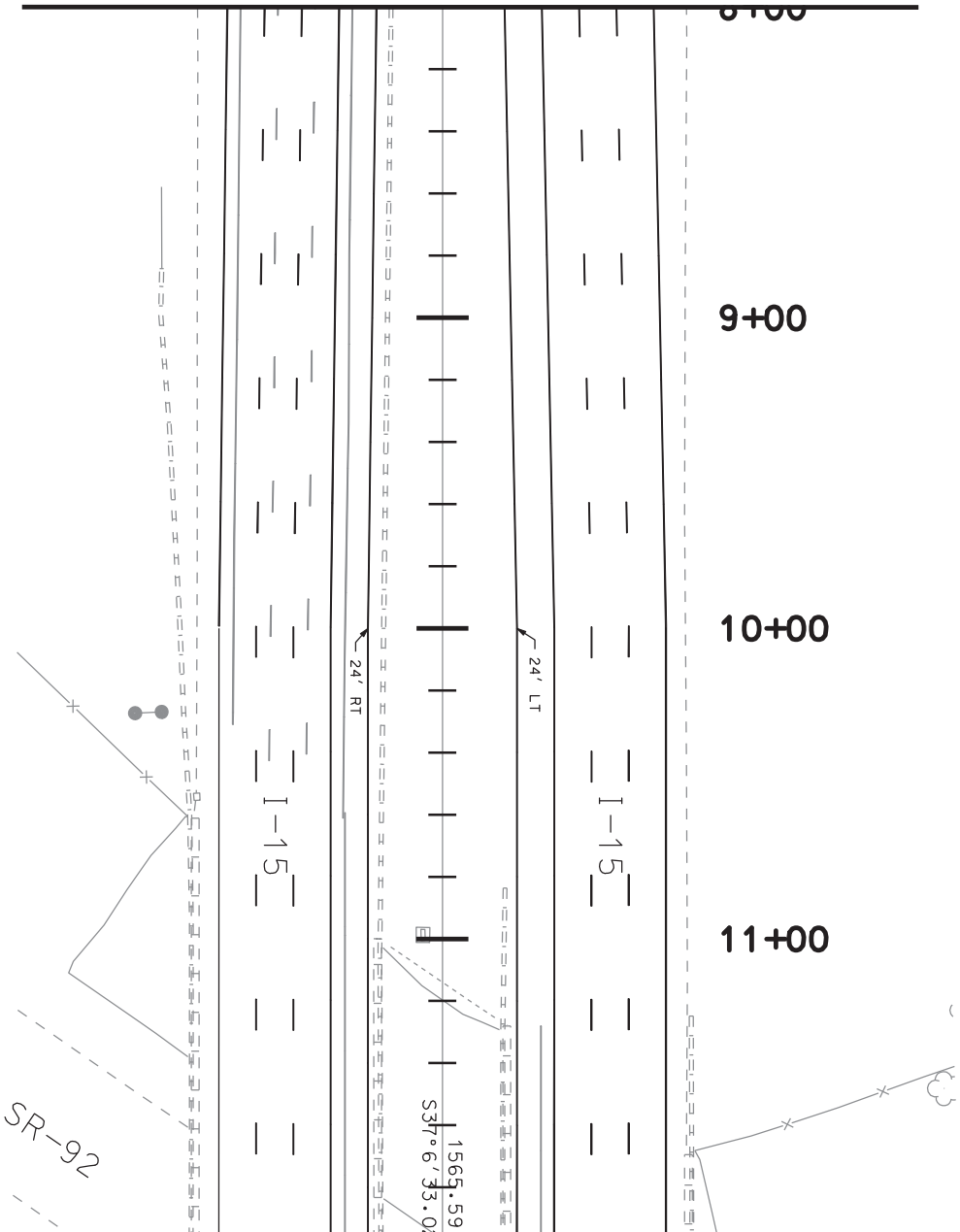


END PAVEMENT MARKING TAPER
STA 10+00, RT

RELOCATE SIGN REQ'D
STA 10+00 TO
STA 785+80, CL

1-1

TRUCKS - TRAILERS - RVS
AND ALL COMMERCIAL VEHICLES
OVER 12000 G.V.W.
PROHIBITED IN LEFT LANE

BEGIN PAVEMENT MARKING TAPER
STA 14+00, RT

END PAVEMENT MARKING TAPER
STA 10+00, LT

PRECAST CONCRETE FULL BARRIER
(NEW JERSEY SHAPE) REQ'D
STA 13+90, 20.0 LT TO
STA 53+17, 12.0 RT

BEGIN PAVEMENT MARKING TAPER
STA 14+00, LT

BEGIN PAVEMENT WIDENING
STA 13+88, 22.0 LT.

**BEGIN PAVEMENT WIDENING**

STA 13+60, 22.0 RT.

**PAVEMENT MARKING PAINT REQ'D.**

STA 14+00 TO 16+60
4" SOLID YELLOW, 24.0 TO 20.0 RT,
4" SKIP WHITE,
36.0 TO 32.0 LT,
48.0 TO 44.0 LT,
60.0 TO 56.0 RT
4" SOLID WHITE, 72.0 TO 68.0 RT

**END PAVEMENT MARKING TAPER**

STA 16+60, RT

**PAVEMENT MARKING PAINT REQ'D.**

STA 16+60 TO 817+14
4" SOLID YELLOW, 20.0 RT,
4" SKIP WHITE,
32.0 LT, 44.0 LT, 56.0 RT
4" SOLID WHITE, 68.0 RT

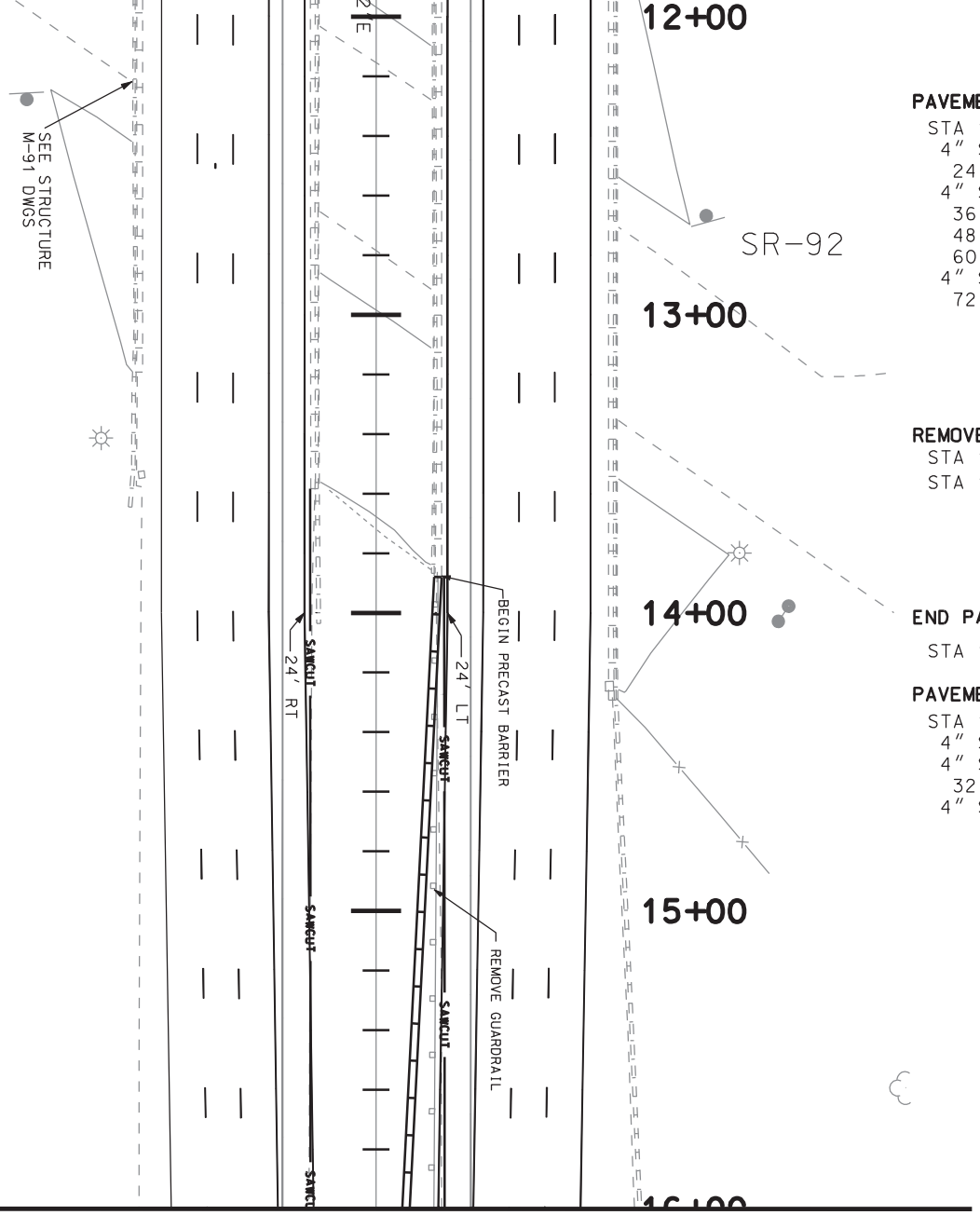


**PAVEMENT MARKING PAINT REQ'D.**

STA 14+00 TO 16+60
4" SOLID YELLOW,
24.0 TO 20.0 LT,
4" SKIP WHITE,
36.0 TO 32.0 LT,
48.0 TO 44.0 LT,
60.0 TO 56.0 LT
4" SOLID WHITE,
72.0 TO 68.0 LT

**REMOVE GUARDRAIL REQ'D**

STA 13+85, LT TO
STA 17+60, LT

**END PAVEMENT MARKING TAPER**

STA 16+60, LT

**PAVEMENT MARKING PAINT REQ'D.**

STA 16+60 TO 817+14
4" SOLID YELLOW, 20.0 LT,
4" SKIP WHITE,
32.0 LT, 44.0 LT, 56.0 LT
4" SOLID WHITE, 68.0 LT

MATCH LINE STATION 16+00.000
SEE SHEET RD2

| | | | | | | |
|---|---|---|---|---|---|---|
| SHEET NO. RD-1 | UTAH COUNTY | I-15; CORRIDOR IN UTAH COUNTY | UTAH DEPARTMENT OF TRANSPORTATION<br>REGION THREE -- OREM CITY, UTAH<br>ROADWAY DESIGN | | | |
| | | PLAN SHEET | APPROVAL RECOMM. ____ DATE ____ PROJECT DESIGN ENGINEER | DESIGN JAH 02-05 | CHECK SMM 02-05 | REVIEW |
| | | PROJECT NUMBER SP-15-6(52)241 | APPROVED FOR USE BY UDOT ____ DATE ____ PRECONSTRUCTION ENGINEER | DRAWN JAH 02-05 | CHECK SMM 02-05 | DATE ____ |
| | | | | QUANT. JAH 02-05 | CHECK SMM 02-05 | BY ____ |

| NO. | DATE | DESIGN REV. BY | MAPS CORR. BY | PARCELS AFFECTED | REQUEST BY | REMARKS |
|---|---|---|---|---|---|---|
| | | ORIGINAL SUBMISSION FOR AUTHORIZATION | | | | |

DATE REVISIONS

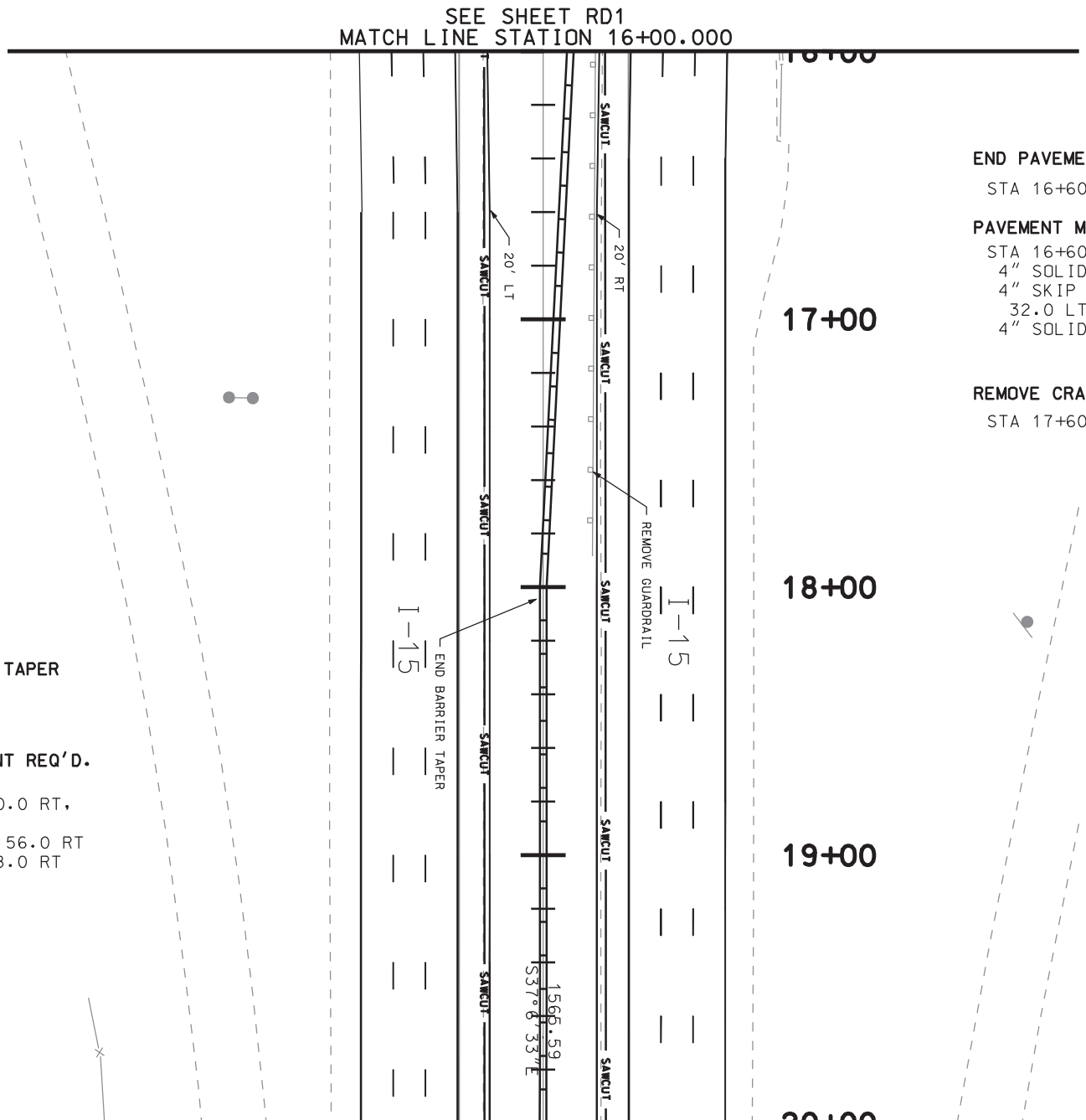


**END PAVEMENT MARKING TAPER**

STA 16+60, LT

**PAVEMENT MARKING PAINT REQ'D.**

STA 16+60 TO 817+14
4" SOLID YELLOW, 20.0 LT,
4" SKIP WHITE,
32.0 LT, 44.0 LT, 56.0 LT
4" SOLID WHITE, 68.0 LT

**REMOVE CRASH CUSHION REQ'D**

STA 17+60, LT

**END PAVEMENT MARKING TAPER**

STA 16+60, RT

**PAVEMENT MARKING PAINT REQ'D.**

STA 16+60 TO 817+14
4" SOLID YELLOW, 20.0 RT,
4" SKIP WHITE,
32.0 LT, 44.0 LT, 56.0 RT
4" SOLID WHITE, 68.0 RT

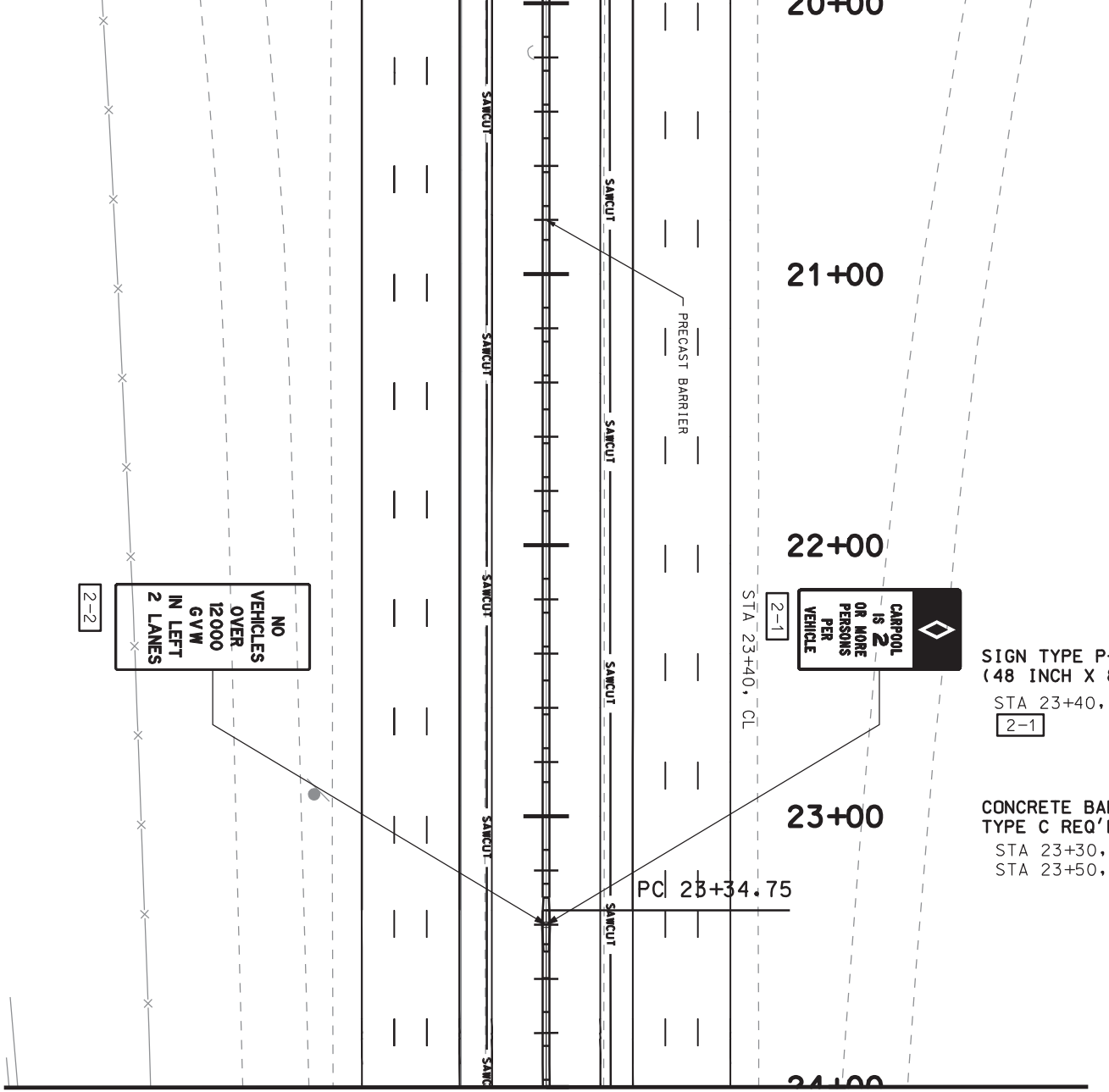


| | | | | | | |
|---|---|---|---|---|---|---|
| SHEET NO. RD-2 | UTAH COUNTY | I-15; CORRIDOR IN UTAH COUNTY | UTAH DEPARTMENT OF TRANSPORTATION<br>REGION THREE -- OREM CITY, UTAH<br>ROADWAY DESIGN | | | |
| | | PLAN SHEET | APPROVAL RECOMM. ____ DATE ____ PROJECT DESIGN ENGINEER | DESIGN JAH 02-05 | CHECK SMM 02-05 | REVIEW |
| | | PROJECT NUMBER SP-15-6(52)241 | APPROVED FOR USE BY UDOT ____ DATE ____ PRECONSTRUCTION ENGINEER | DRAWN JAH 02-05 | CHECK SMM 02-05 | DATE ____ |
| | | | | QUANT. JAH 02-05 | CHECK SMM 02-05 | BY ____ |

| NO. | DATE | DESIGN REV. BY | MAPS CORR. BY | PARCELS AFFECTED | REQUEST BY | REMARKS |
|---|---|---|---|---|---|---|
| | | ORIGINAL SUBMISSION FOR AUTHORIZATION | | | | |

DATE REVISIONS

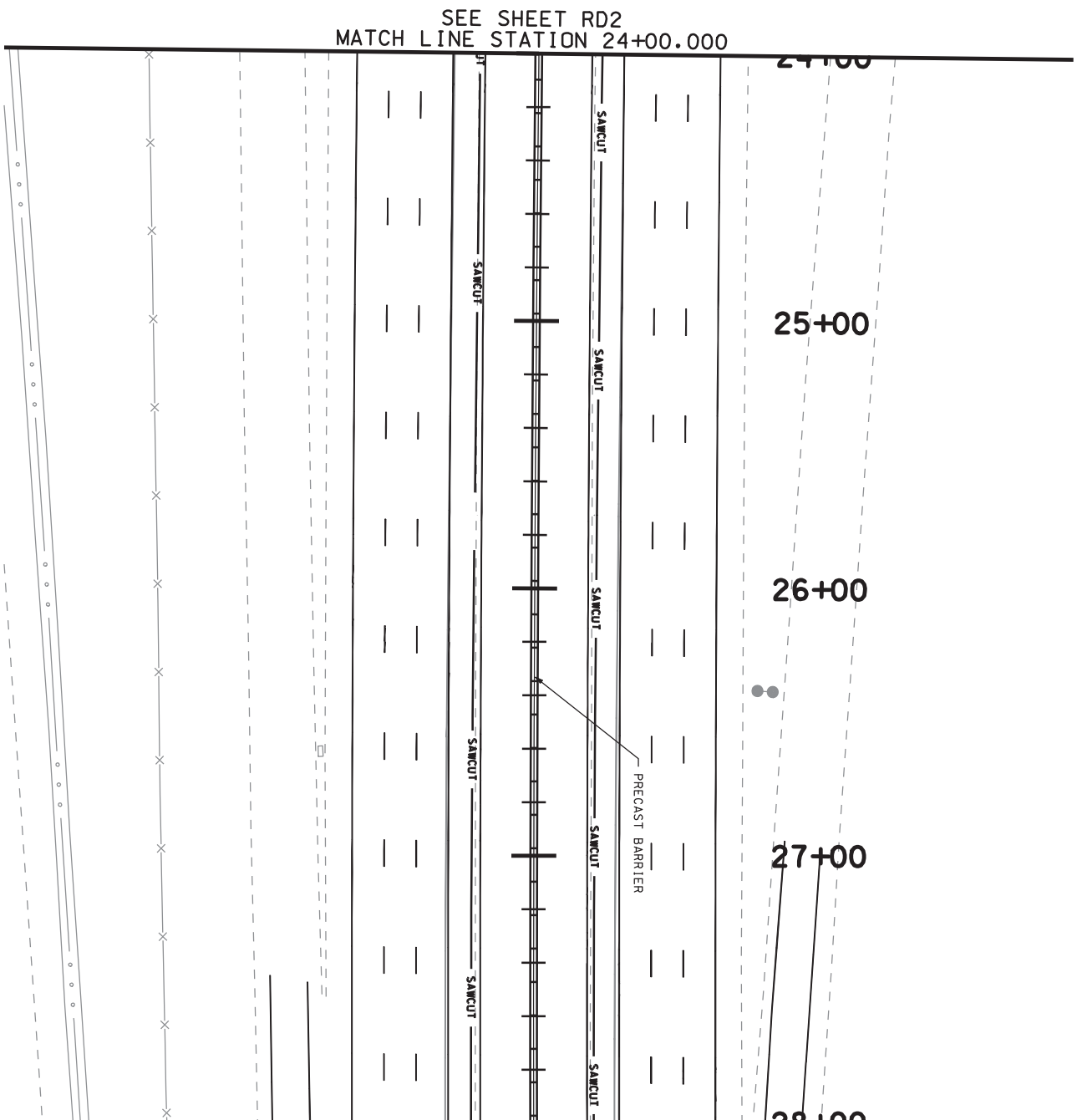
SEE SHEET RD2
MATCH LINE STATION 24+00.000
24+00
25+00
26+00
27+00
28+00
SAWCUT
SAWCUT
SAWCUT
SAWCUT
SAWCUT
SAWCUT
SAWCUT
PRECAST BARRIER

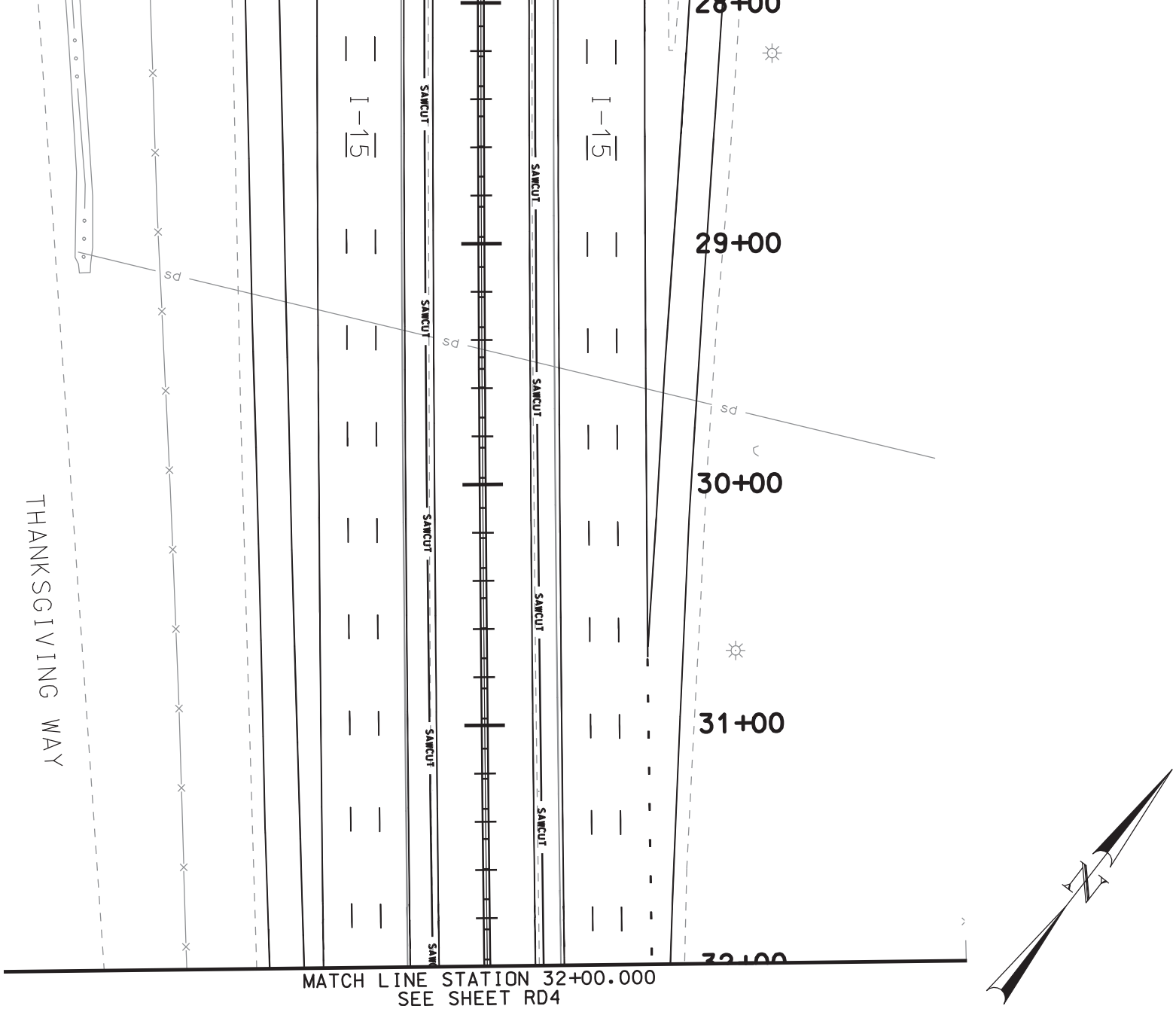


MATCH LINE STATION 32+00.000
SEE SHEET RD4

| | | | | | | |
|---|---|---|---|---|---|---|
| I-15; CORRIDOR | UTAH DEPARTMENT OF TRANSPORTATION | | | | | |
| IN UTAH COUNTY | REGION THREE -- OREM CITY, UTAH | | | | | |
| PLAN SHEET | ROADWAY DESIGN | | | | | |
| | APPROVAL RECOMM. ____ DATE ____ PROJECT DESIGN ENGINEER | DESIGN JAH 02-05 | CHECK SMM 02-05 | REVIEW | | |
| PROJECT NUMBER SP-15-6(52)241 | APPROVED FOR USE BY UDOT ____ DATE ____ PRECONSTRUCTION ENGINEER | DRAWN JAH 02-05 | CHECK SMM 02-05 | DATE ____ | | |
| | | QUANT. JAH 02-05 | CHECK SMM 02-05 | BY ____ | | |

| NO. | DATE | DESIGN REV. BY | MAPS CORR. BY | PARCELS AFFECTED | REQUEST BY | REMARKS |
|---|---|---|---|---|---|---|
| | | ORIGINAL SUBMISSION FOR AUTHORIZATION | | | | |
| | DATE | REVISIONS | | | | |

UTAH COUNTY

SHEET NO. RD-3

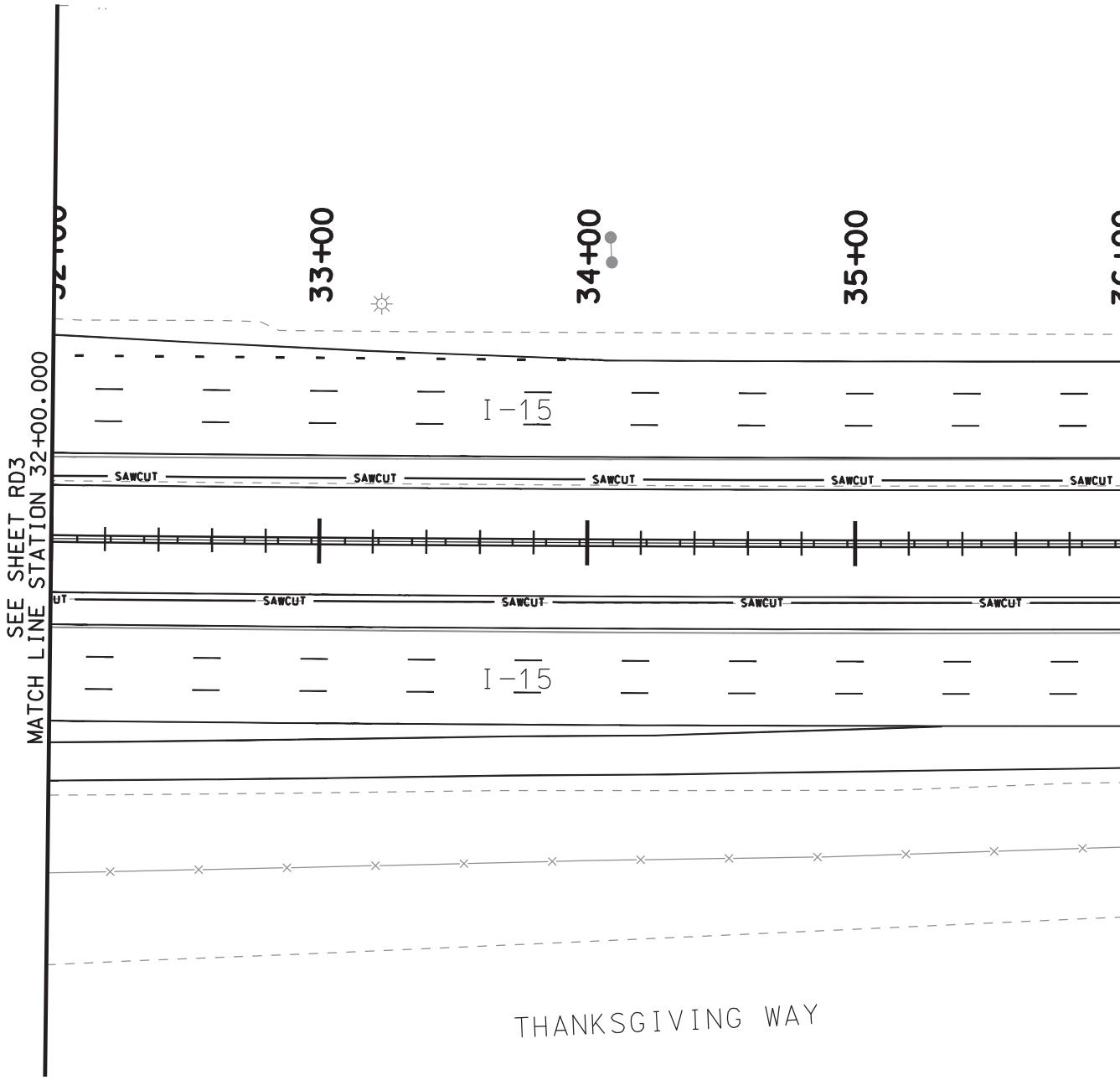
33+00
34+00
35+00
I-15
SAWCUT
SAWCUT
SAWCUT
SAWCUT
SAWCUT
SAWCUT
SAWCUT
SAWCUT
SAWCUT
I-15
SEE SHEET RD3
MATCH LINE STATION 32+00.000
THANKSGIVING WAY

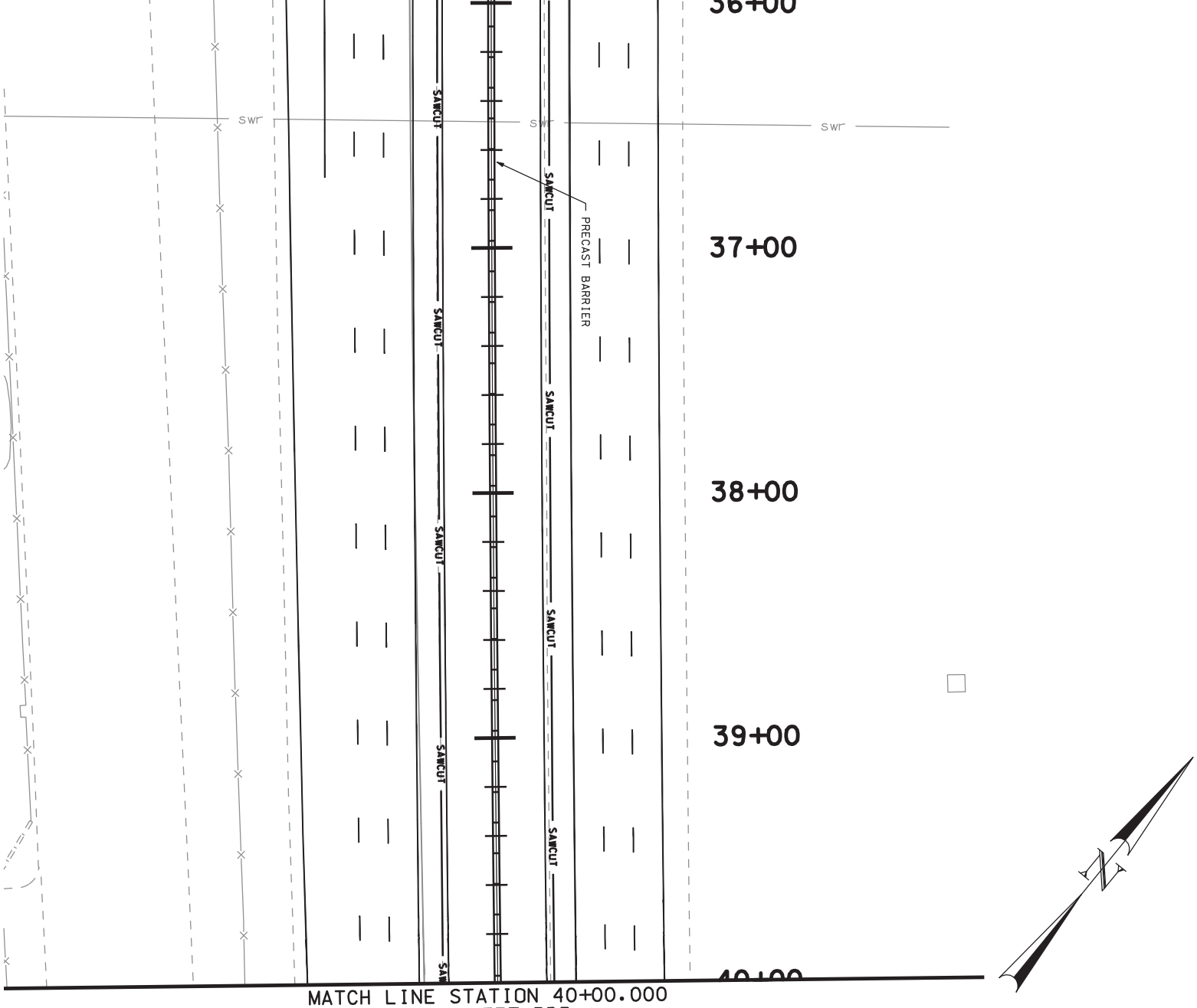


MATCH LINE STATION 40+00.000
SEE SHEET RD5

| | | | | | | |
|---|---|---|---|---|---|---|
| I-15; CORRIDOR | UTAH DEPARTMENT OF TRANSPORTATION | | | | | |
| IN UTAH COUNTY | REGION THREE -- OREM CITY, UTAH | | | | | |
| PLAN SHEET | ROADWAY DESIGN | | | | | |
| | APPROVAL RECOMM. ____ DATE ____ PROJECT DESIGN ENGINEER | DESIGN JAH 02-05 | CHECK SMM 02-05 | REVIEW | | |
| PROJECT NUMBER SP-15-6(52)241 | APPROVED FOR USE BY UDOT ____ DATE ____ PRECONSTRUCTION ENGINEER | DRAWN JAH 02-05 | CHECK SMM 02-05 | DATE ____ | | |
| | | QUANT. JAH 02-05 | CHECK SMM 02-05 | BY ____ | | |

| NO. | DATE | DESIGN REV. BY | MAPS CORR. BY | PARCELS AFFECTED | REQUEST BY | REMARKS |
|---|---|---|---|---|---|---|
| | | ORIGINAL SUBMISSION FOR AUTHORIZATION | | | | |
| DATE | | REVISIONS | | | | |

SHEET NO. RD-4

UTAH COUNTY

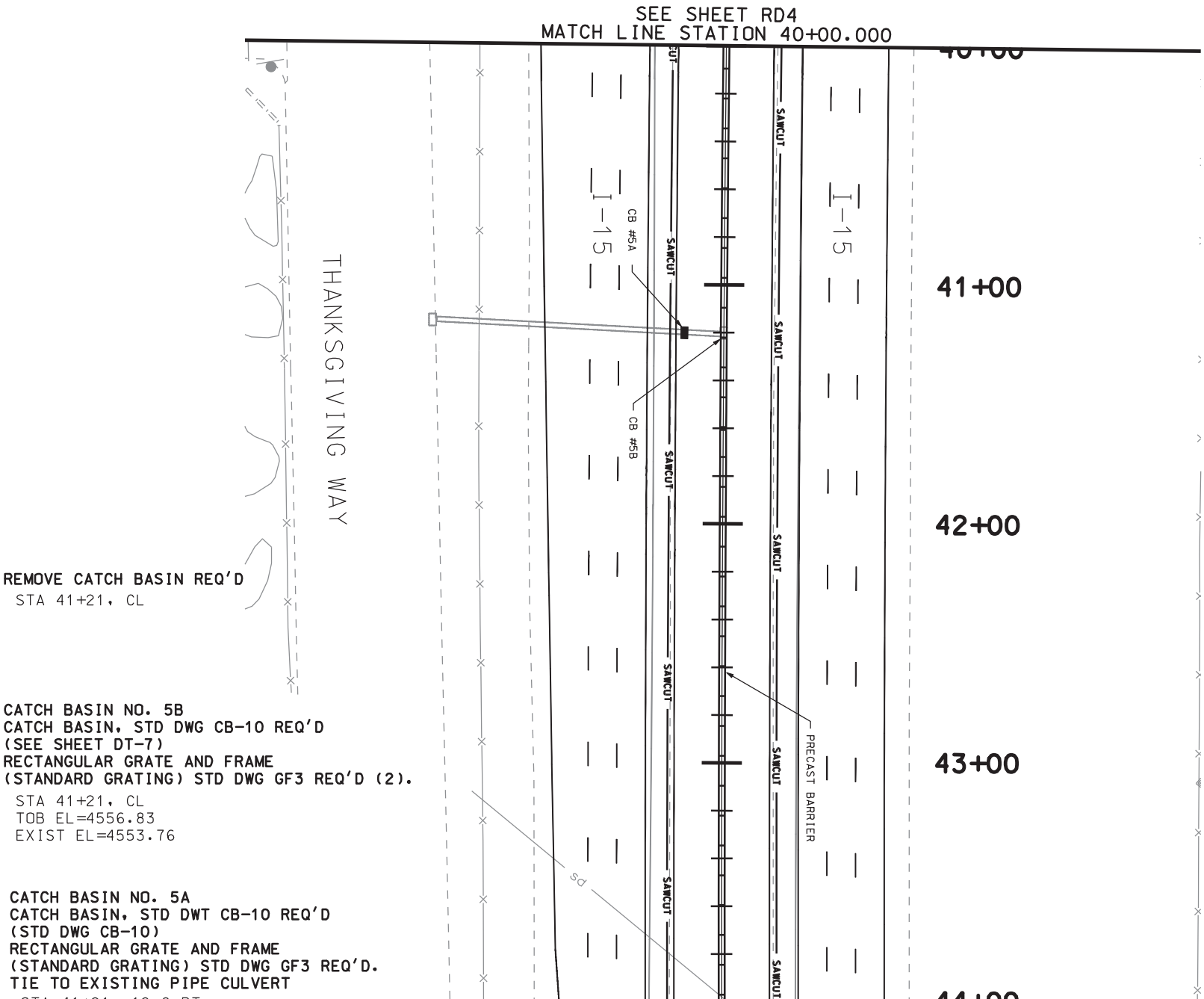


REMOVE CATCH BASIN REQ'D
STA 41+21, CL

CATCH BASIN NO. 5B
CATCH BASIN, STD DWG CB-10 REQ'D
(SEE SHEET DT-7)
RECTANGULAR GRATE AND FRAME
(STANDARD GRATING) STD DWG GF3 REQ'D (2).
STA 41+21, CL
TOB EL=4556.83
EXIST EL=4553.76

CATCH BASIN NO. 5A
CATCH BASIN, STD DWT CB-10 REQ'D
(STD DWG CB-10)
RECTANGULAR GRATE AND FRAME
(STANDARD GRATING) STD DWG GF3 REQ'D.
TIE TO EXISTING PIPE CULVERT

STA 41+21, 12.0 RT
COL A, LINE 1
TOB ELEV = 4556.35

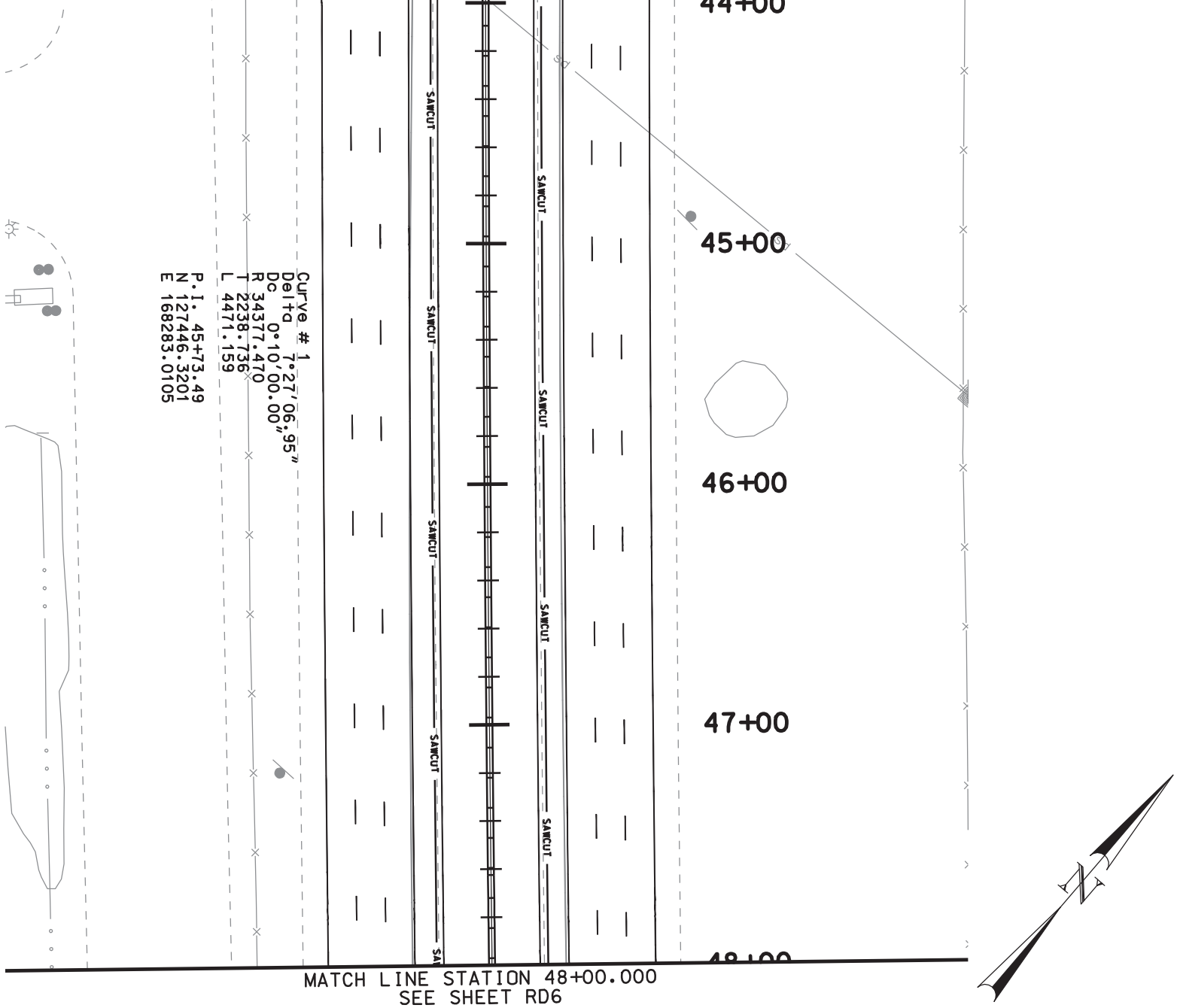


MATCH LINE STATION 48+00.000
SEE SHEET RD6

| | | | | | | |
|---|---|---|---|---|---|---|
| I-15; CORRIDOR | UTAH DEPARTMENT OF TRANSPORTATION | | | | | |
| IN UTAH COUNTY | REGION THREE -- OREM CITY, UTAH | | | | | |
| PLAN SHEET | ROADWAY DESIGN | | | | | |
| | APPROVAL RECOMM. ____ DATE ____ PROJECT DESIGN ENGINEER | DESIGN JAH 02-05 | CHECK SMM 02-05 | REVIEW | | |
| | APPROVED FOR USE BY UDOT ____ DATE ____ PRECONSTRUCTION ENGINEER | DRAWN JAH 02-05 | CHECK SMM 02-05 | DATE ____ | | |
| PROJECT NUMBER SP-15-6(52)241 | | QUANT. JAH 02-05 | CHECK SMM 02-05 | BY ____ | | |

| NO. | DATE | DESIGN REV. BY | MAPS CORR. BY | PARCELS AFFECTED | REQUEST BY | REMARKS |
|---|---|---|---|---|---|---|
| | | ORIGINAL SUBMISSION FOR AUTHORIZATION | | | | |
| | DATE | REVISIONS | | | | |

UTAH COUNTY

SHEET NO. RD-5

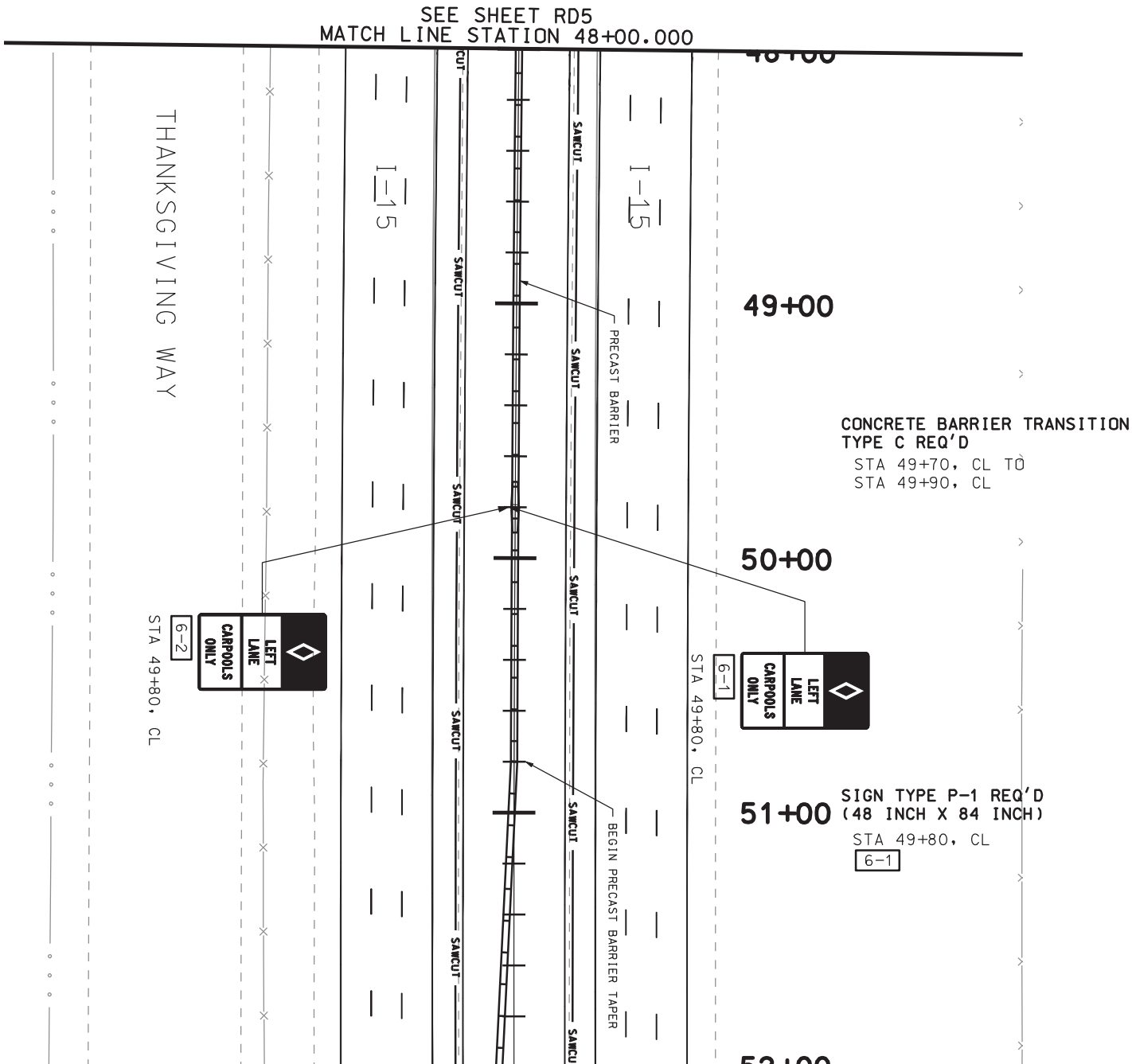
SEE SHEET RD5
MATCH LINE STATION 48+00.000
49+00
50+00
51+00
I-15
I-15
THANKSGIVING WAY
SAWCUT
PRECAST BARRIER
BEGIN PRECAST BARRIER TAPER
LEFT LANE CARPOOLS ONLY
6-1
STA 49+80, CL
6-2
STA 49+80, CL
CONCRETE BARRIER TRANSITION
TYPE C REQ'D
STA 49+70, CL TO
STA 49+90, CL
SIGN TYPE P-1 REQ'D
(48 INCH X 84 INCH)
STA 49+80, CL
6-1
SIGN TYPE P-1 REQ'D
(48 INCH X 84 INCH)
STA 49+80, CL
6-2

SIGN TYPE P-1 REQ'D
(42 INCH X 60 INCH)
STA 53+30, 12.0 RT
6-4

CATCH BASIN NO. 6B
CATCH BASIN, STD DWG CB-10 REQ'D
(STD DWG CB-10)
RECTANGULAR GRATE AND FRAME
(STANDARD GRATING) STD DWG GF3 REQ'D.
STA 53+19, 12.0 RT
COL A, LINE 1
TOB ELEV = 4541.25

CATCH BASIN NO. 6A
CATCH BASIN, DETAIL DWG DT-7 REQ'D
(SEE SHEET DT-7)
RECTANGULAR GRATE AND FRAME
(STANDARD GRATING) STD DWG GF3 REQ'D (2).
TIE TO EXISTING PIPE CULVERT
STA 53+19, CL
TOB EL=4541.74
EXIST EL=4538.34

REMOVE CATCH BASIN REQ'D
STA 53+19, CL

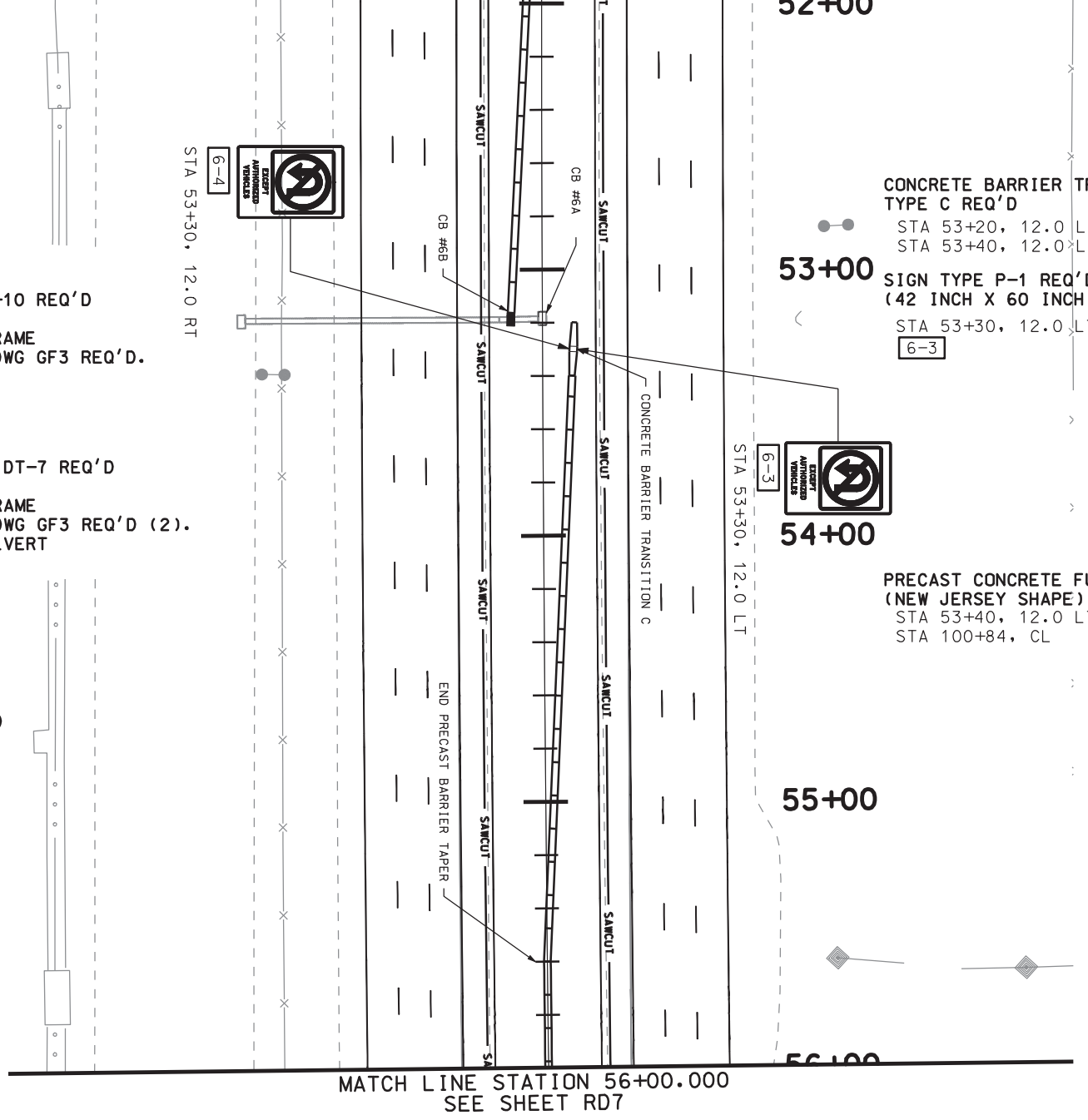


CONCRETE BARRIER TRANSITION
TYPE C REQ'D
STA 53+20, 12.0 LT TO
STA 53+40, 12.0 LT

SIGN TYPE P-1 REQ'D
(42 INCH X 60 INCH)
STA 53+30, 12.0 LT
6-3

PRECAST CONCRETE FULL BARRIER
(NEW JERSEY SHAPE) REQ'D
STA 53+40, 12.0 LT TO
STA 100+84, CL

MATCH LINE STATION 56+00.000
SEE SHEET RD7

| | | | | | |
|---|---|---|---|---|---|
| I-15; CORRIDOR | UTAH DEPARTMENT OF TRANSPORTATION | | | | |
| IN UTAH COUNTY | REGION THREE -- OREM CITY, UTAH | | | | |
| PLAN SHEET | ROADWAY DESIGN | | | | |
| | APPROVAL RECOMM. DATE / PROJECT DESIGN ENGINEER | DESIGN JAH 02-05 | CHECK SMM 02-05 | REVIEW | |
| | APPROVED FOR USE BY UDOT DATE / PRECONSTRUCTION ENGINEER | DRAWN JAH 02-05 | CHECK SMM 02-05 | DATE | |
| PROJECT NUMBER SP-15-6(52)241 | | QUANT. JAH 02-05 | CHECK SMM 02-05 | BY | |

| NO. | DATE | DESIGN REV. BY | MAPS CORR. BY | PARCELS AFFECTED | REQUEST BY | REMARKS |
|---|---|---|---|---|---|---|
| | | ORIGINAL SUBMISSION FOR AUTHORIZATION | | | | |
| | DATE | REVISIONS | | | | |

SHEET NO. RD-6
UTAH COUNTY

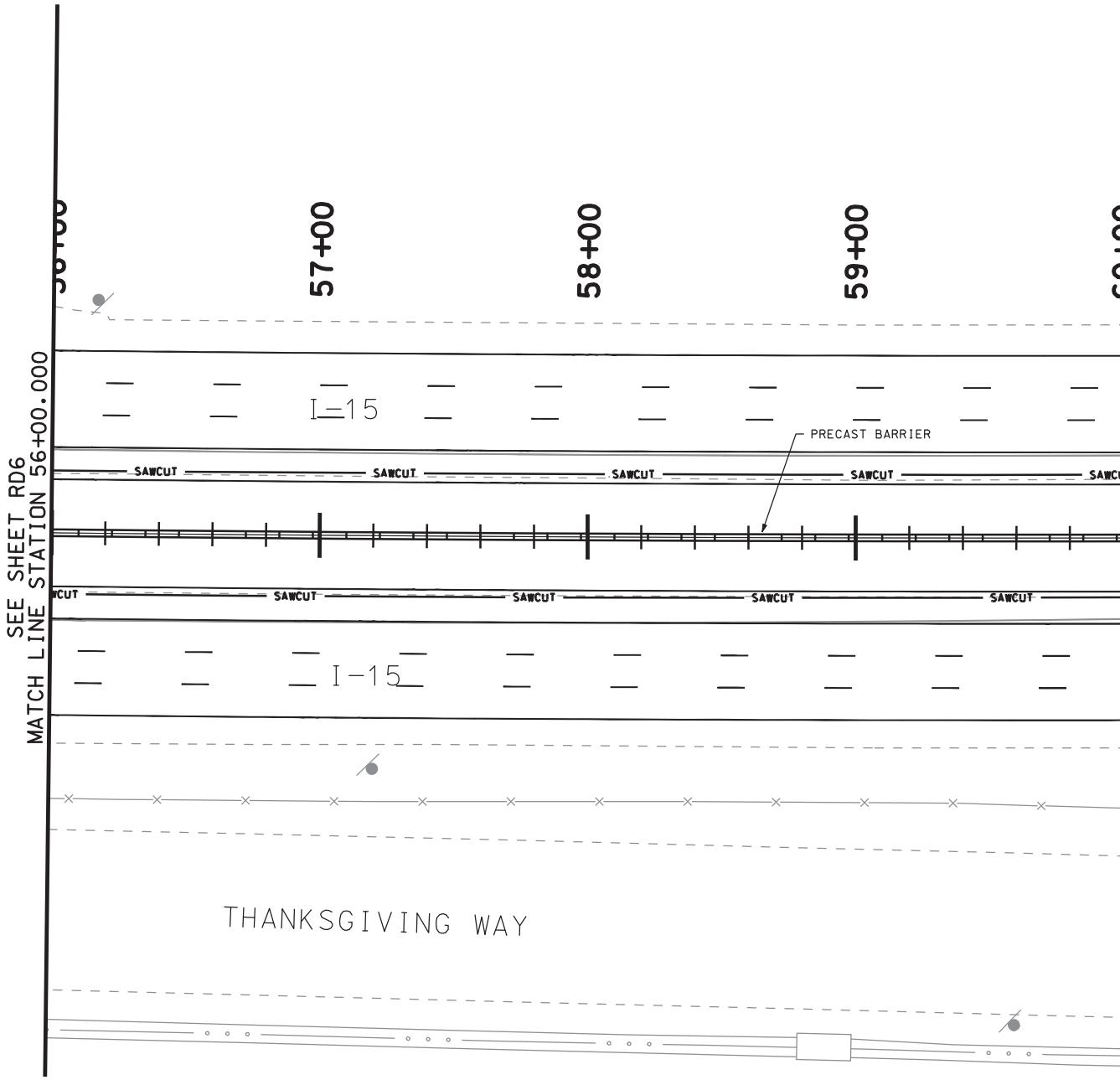


DGN File:IP_PWPsdms1715\RD-007.dgn

02-MAY-2005

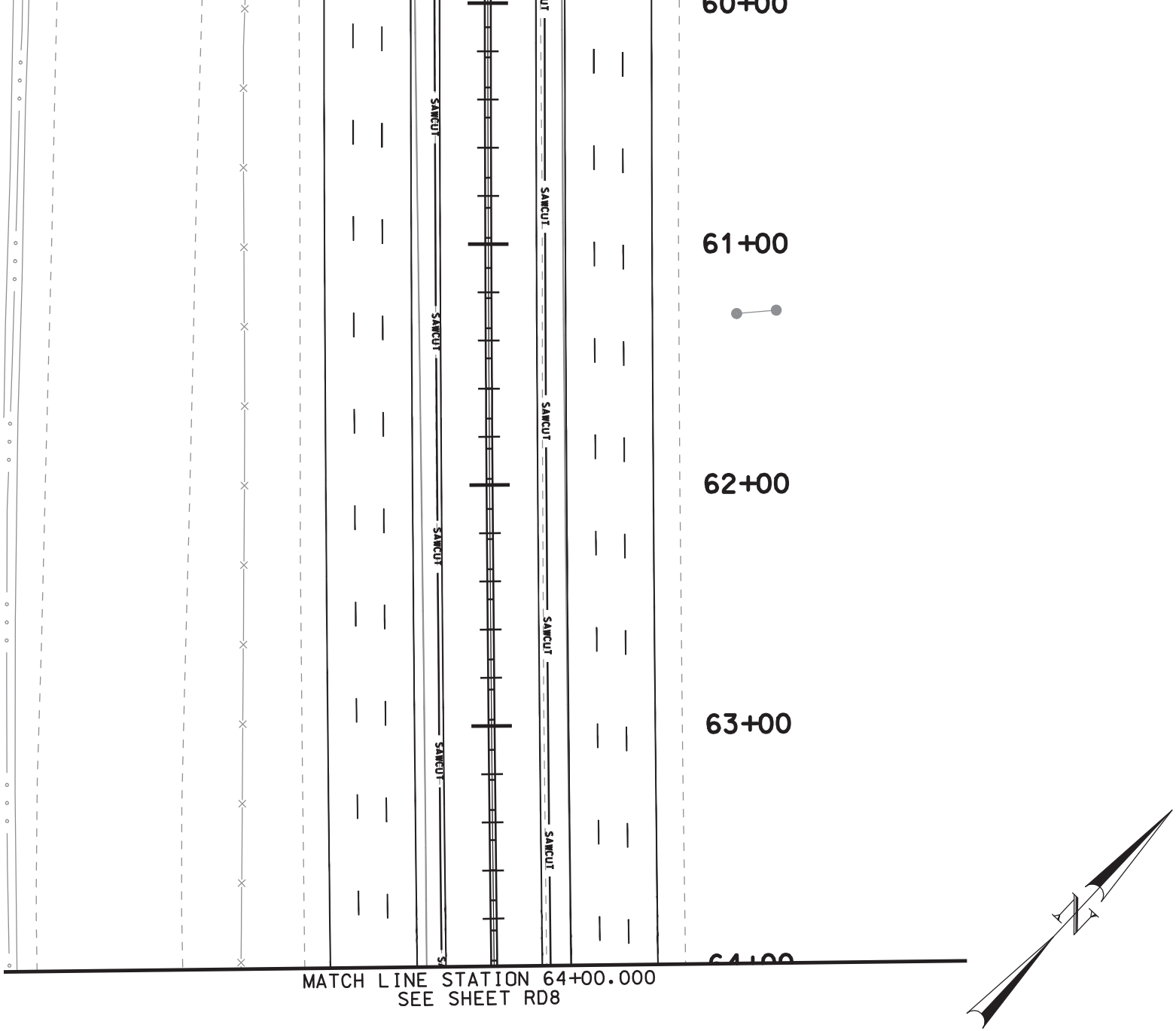


MATCH LINE STATION 64+00.000
SEE SHEET RD8

| | | | | | | |
|---|---|---|---|---|---|---|
| SHEET NO. RD-7 | UTAH COUNTY | I-15; CORRIDOR IN UTAH COUNTY | UTAH DEPARTMENT OF TRANSPORTATION<br>REGION THREE -- OREM CITY, UTAH<br>ROADWAY DESIGN | | | |
| | | PLAN SHEET | APPROVAL RECOMM. ____ DATE ____ PROJECT DESIGN ENGINEER | DESIGN JAH 02-05 | CHECK SMM 02-05 | REVIEW |
| | | PROJECT NUMBER SP-15-6(52)241 | APPROVED FOR USE BY UDOT ____ DATE ____ PRECONSTRUCTION ENGINEER | DRAWN JAH 02-05 | CHECK SMM 02-05 | DATE ____ |
| | | | | QUANT. JAH 02-05 | CHECK SMM 02-05 | BY ____ |

| NO. | DATE | DESIGN REV. BY | MAPS CORR. BY | PARCELS AFFECTED | REQUEST BY | REMARKS |
|---|---|---|---|---|---|---|
| | | ORIGINAL SUBMISSION FOR AUTHORIZATION | | | | |
| DATE | | REVISIONS | | | | |

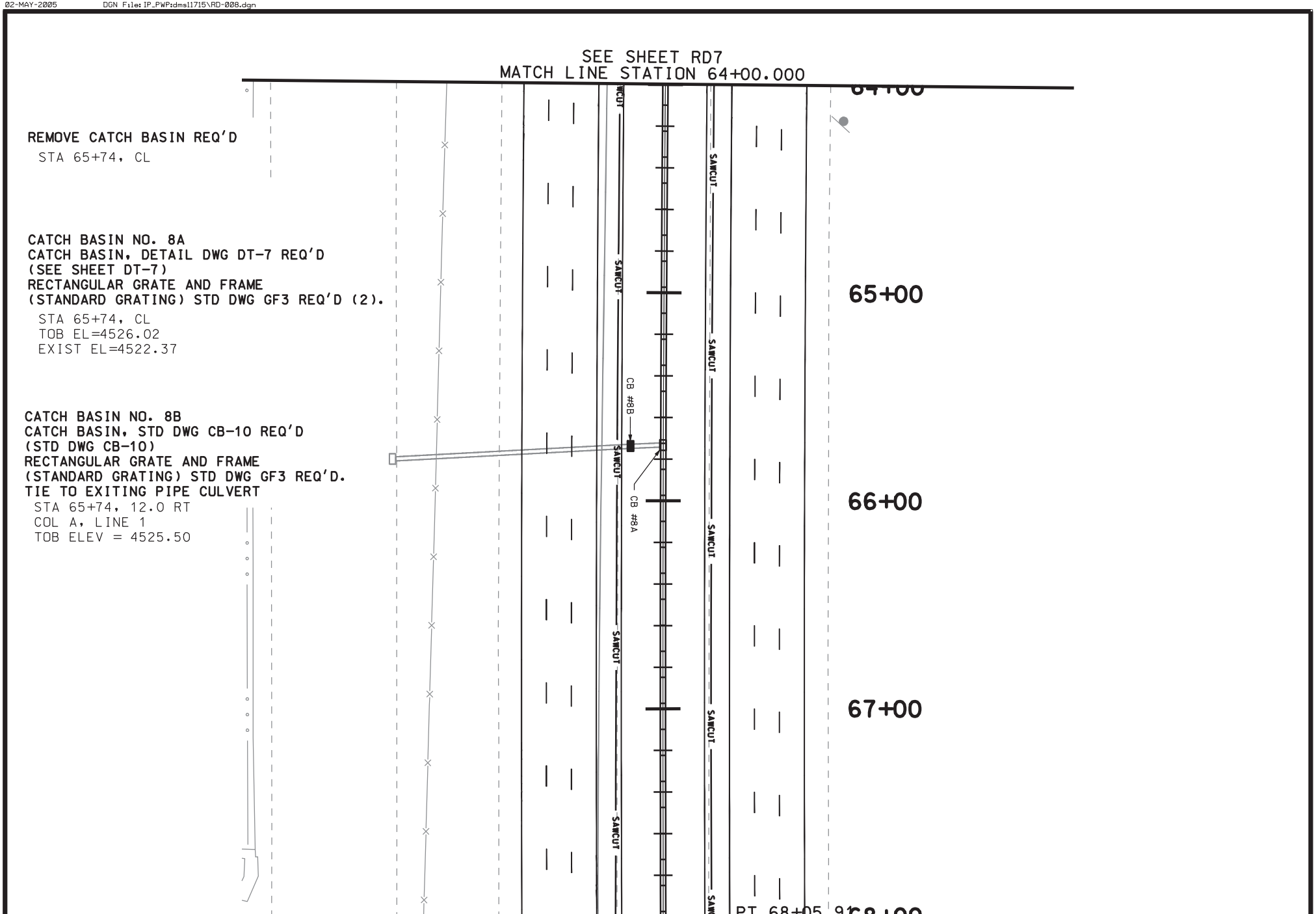
SEE SHEET RD7
MATCH LINE STATION 64+00.000
REMOVE CATCH BASIN REQ'D
STA 65+74, CL
CATCH BASIN NO. 8A
CATCH BASIN, DETAIL DWG DT-7 REQ'D
(SEE SHEET DT-7)
RECTANGULAR GRATE AND FRAME
(STANDARD GRATING) STD DWG GF3 REQ'D (2).
STA 65+74, CL
TOB EL=4526.02
EXIST EL=4522.37
CATCH BASIN NO. 8B
CATCH BASIN, STD DWG CB-10 REQ'D
(STD DWG CB-10)
RECTANGULAR GRATE AND FRAME
(STANDARD GRATING) STD DWG GF3 REQ'D.
TIE TO EXITING PIPE CULVERT
STA 65+74, 12.0 RT
COL A, LINE 1
TOB ELEV = 4525.50
SAWCUT
CB #8B
CB #8A
65+00
66+00
67+00
PT 68+05.91

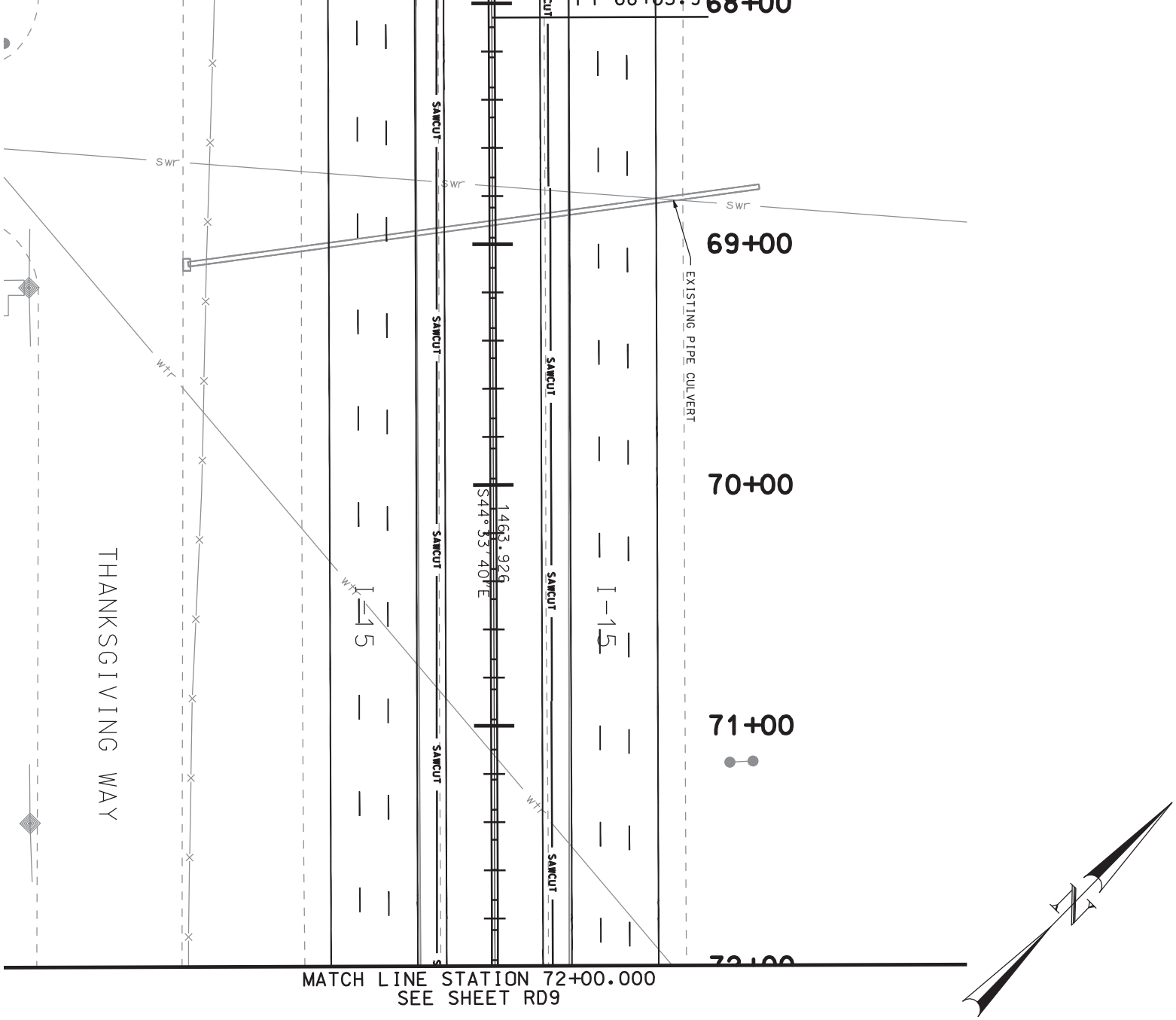


MATCH LINE STATION 72+00.000
SEE SHEET RD9

| | | | | | | |
|---|---|---|---|---|---|---|
| I-15; CORRIDOR | UTAH DEPARTMENT OF TRANSPORTATION | | | | | |
| IN UTAH COUNTY | REGION THREE -- OREM CITY, UTAH | | | | | |
| PLAN SHEET | ROADWAY DESIGN | | | | | |
| | APPROVAL RECOMM. DATE / PROJECT DESIGN ENGINEER | DESIGN JAH 02-05 | CHECK SMM 02-05 | REVIEW | | |
| PROJECT NUMBER SP-15-6(52)241 | APPROVED FOR USE BY UDOT DATE / PRECONSTRUCTION ENGINEER | DRAWN JAH 02-05 | CHECK SMM 02-05 | DATE | | |
| | | QUANT. JAH 02-05 | CHECK SMM 02-05 | BY | | |

| NO. | DATE | DESIGN REV. BY | MAPS CORR. BY | PARCELS AFFECTED | REQUEST BY | REMARKS |
|---|---|---|---|---|---|---|
| | | ORIGINAL SUBMISSION FOR AUTHORIZATION | | | | |
| | DATE | REVISIONS | | | | |

UTAH COUNTY

SHEET NO. RD-8

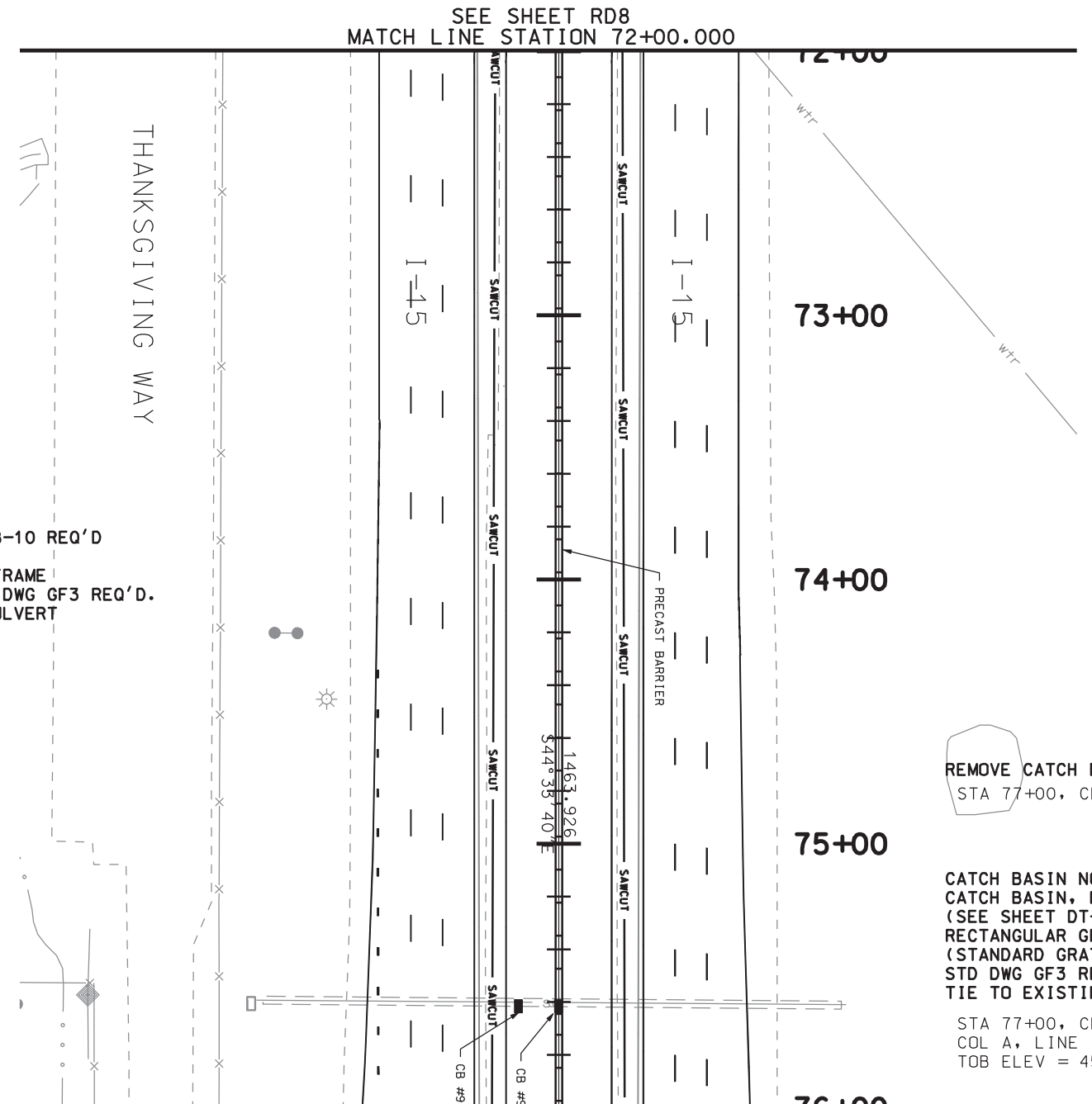


CATCH BASIN NO. 9A
CATCH BASIN, STD DWG CB-10 REQ'D
(STD DWG CB-10)
RECTANGULAR GRATE AND FRAME
(STANDARD GRATING) STD DWG GF3 REQ'D.
TIE TO EXISTING PIPE CULVERT

STA 77+00, 12 RT
COL A, LINE 1
TOB ELEV = 4517.24

REMOVE CATCH BASIN REQ'D
STA 77+00, CL

CATCH BASIN NO. 9B
CATCH BASIN, DETAIL DWG DT-7 REQ'D
(SEE SHEET DT-7)
RECTANGULAR GRATE AND FRAME
(STANDARD GRATING)
STD DWG GF3 REQ'D (2).
TIE TO EXISTING PIPE CULVERT

STA 77+00, CL
COL A, LINE 1
TOB ELEV = 4518.84

SIGN TYPE P-1 REQ'D
(48 INCH X 96 INCH)
STA 76+20, CL
9-2

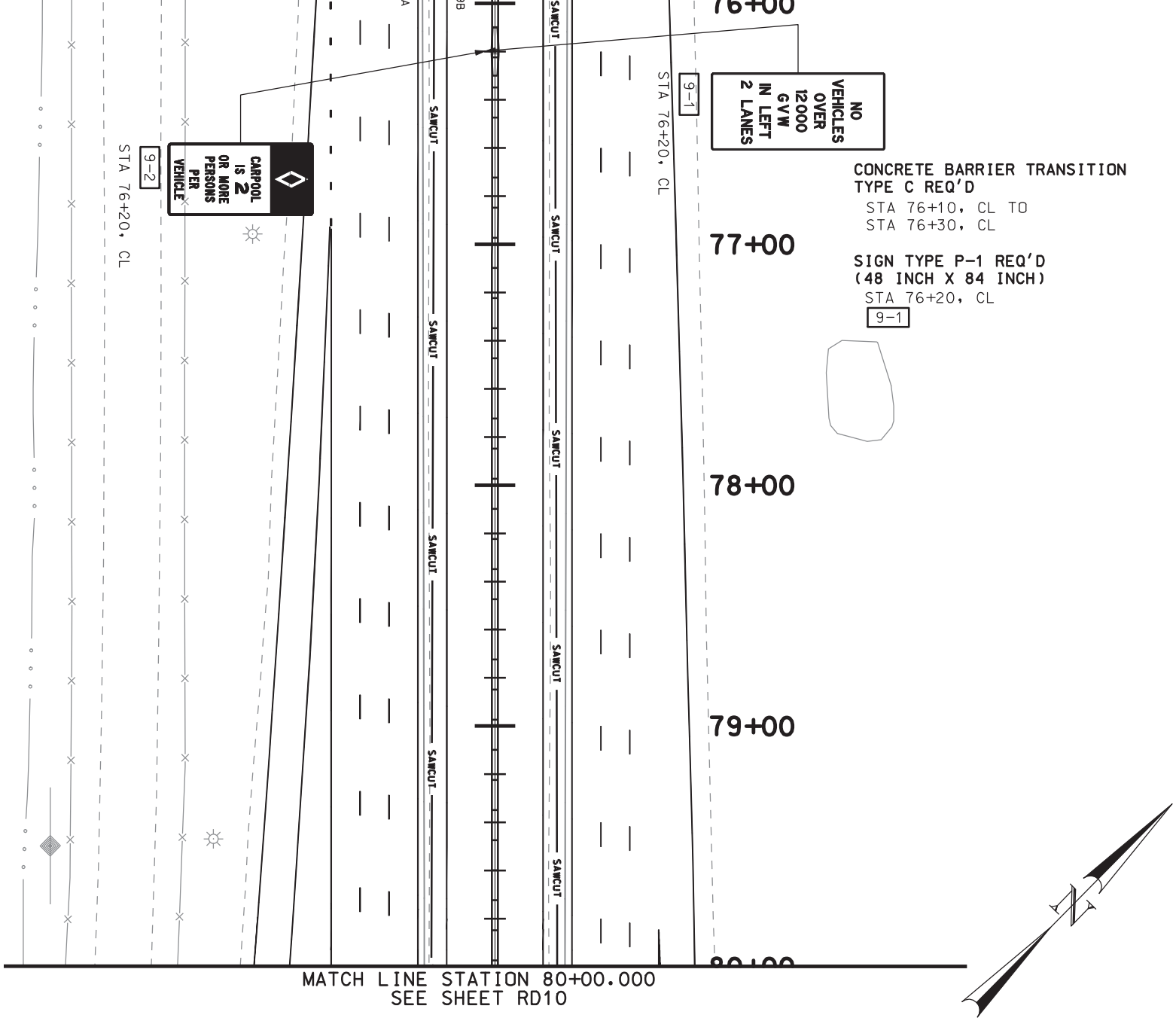


MATCH LINE STATION 80+00.000
SEE SHEET RD10

| | | | | | |
|---|---|---|---|---|---|
| I-15; CORRIDOR | UTAH DEPARTMENT OF TRANSPORTATION | | | | |
| IN UTAH COUNTY | REGION THREE -- OREM CITY, UTAH | | | | |
| PLAN SHEET | ROADWAY DESIGN | | | | |
| | APPROVAL RECOMM. DATE / PROJECT DESIGN ENGINEER | DESIGN JAH 02-05 | CHECK SMM 02-05 | REVIEW | |
| | APPROVED FOR USE BY UDOT DATE / PRECONSTRUCTION ENGINEER | DRAWN JAH 02-05 | CHECK SMM 02-05 | DATE | |
| PROJECT NUMBER SP-15-6(52)241 | | QUANT. JAH 02-05 | CHECK SMM 02-05 | BY | |

| NO. | DATE | DESIGN REV. BY | MAPS CORR. BY | PARCELS AFFECTED | REQUEST BY | REMARKS |
|---|---|---|---|---|---|---|
| | | ORIGINAL SUBMISSION FOR AUTHORIZATION | | | | |
| | DATE | REVISIONS | | | | |

UTAH COUNTY

SHEET NO. RD-9

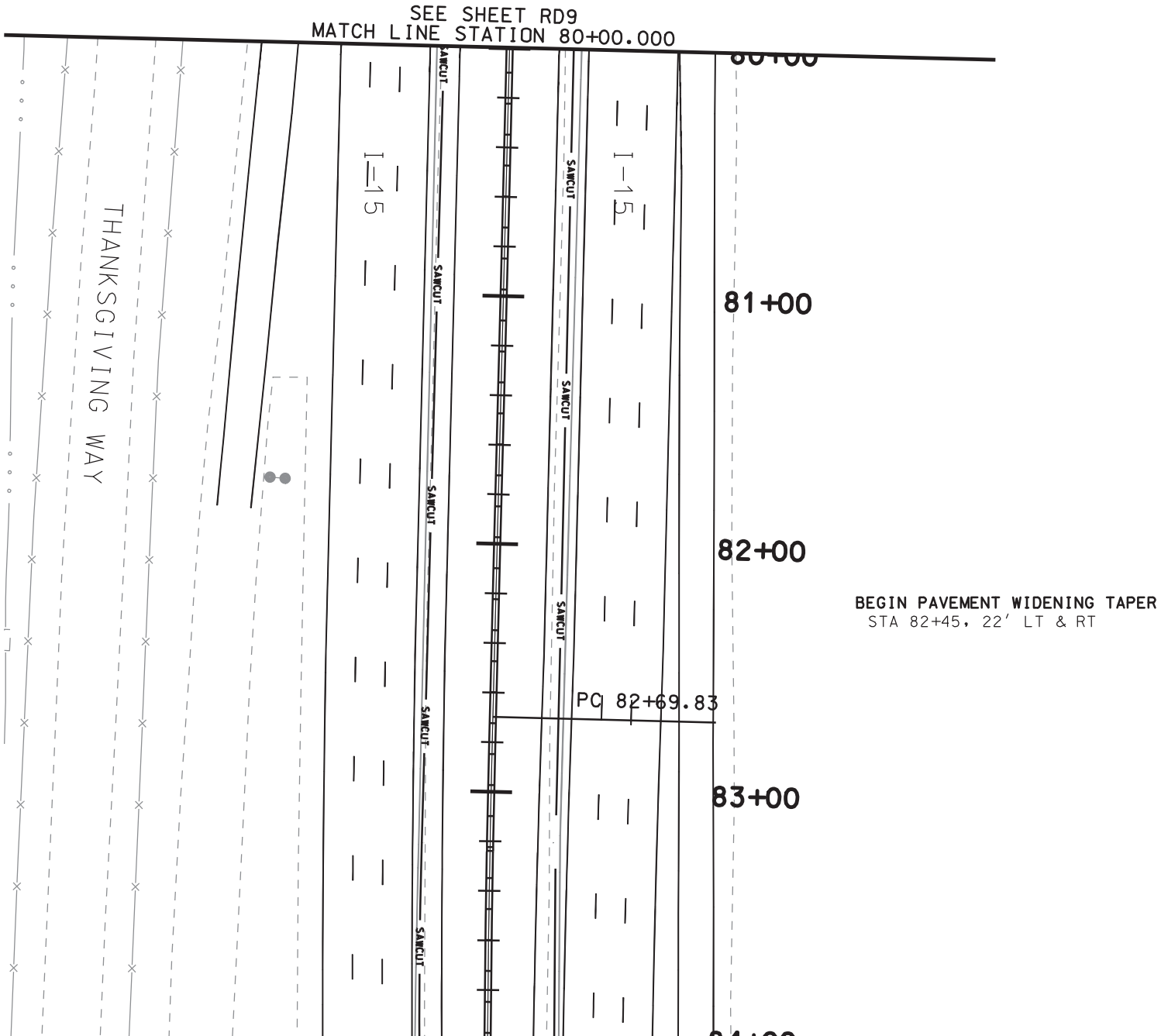
SEE SHEET RD9
MATCH LINE STATION 80+00.000
THANKSGIVING WAY
I-15
I-15
SAWCUT
SAWCUT
SAWCUT
SAWCUT
SAWCUT
SAWCUT
SAWCUT
SAWCUT
81+00
82+00
83+00
PC 82+69.83
BEGIN PAVEMENT WIDENING TAPER
STA 82+45, 22' LT & RT

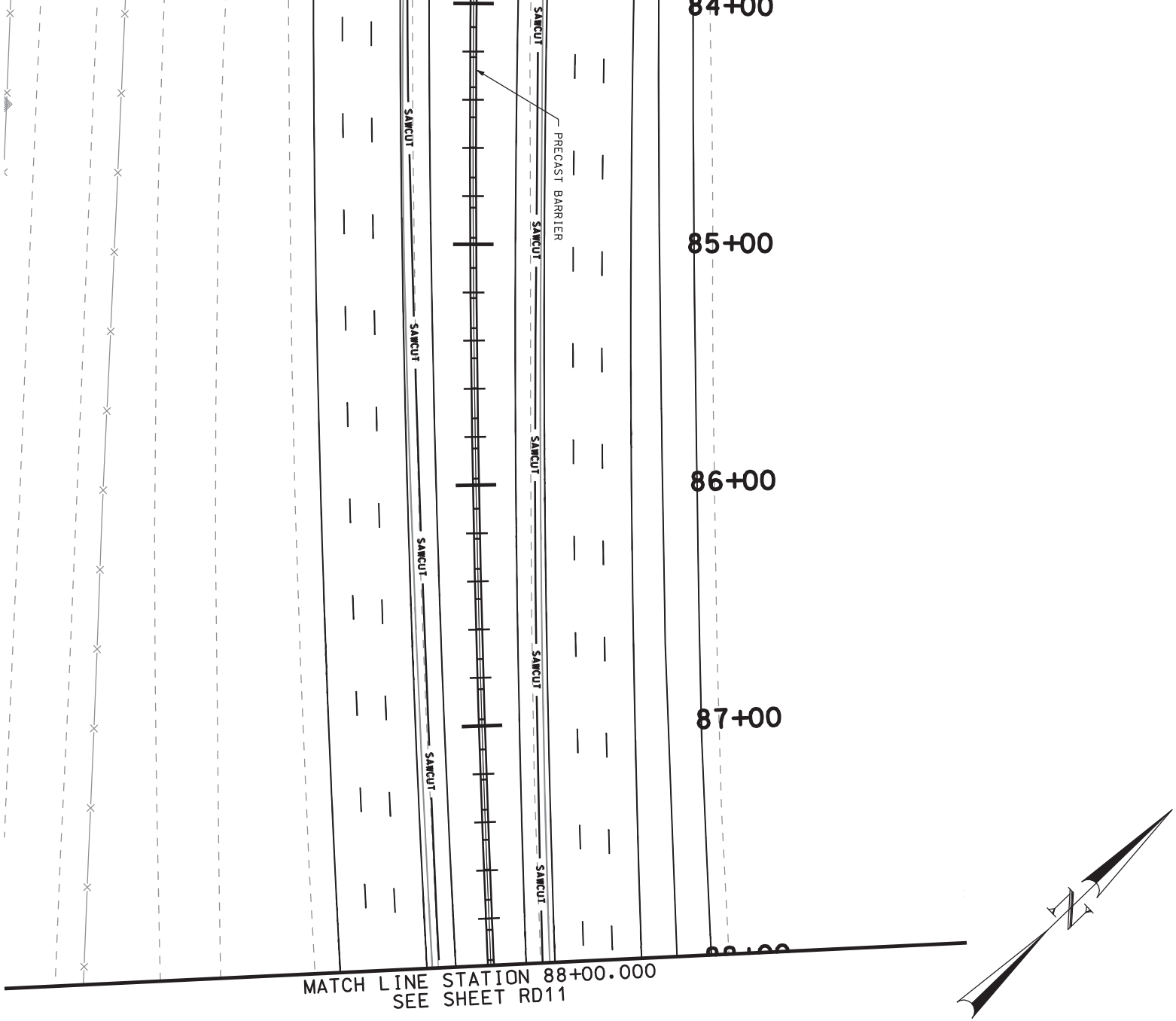


| | | | | | | |
|---|---|---|---|---|---|---|
| I-15; CORRIDOR | UTAH DEPARTMENT OF TRANSPORTATION | | | | | |
| IN UTAH COUNTY | REGION THREE -- OREM CITY, UTAH | | | | | |
| PLAN SHEET | ROADWAY DESIGN | | | | | |
| | APPROVAL RECOMM. DATE / PROJECT DESIGN ENGINEER | DESIGN JAH 02-05 | CHECK SMM 02-05 | REVIEW | | |
| PROJECT NUMBER SP-15-6(52)241 | APPROVED FOR USE BY UDOT DATE / PRECONSTRUCTION ENGINEER | DRAWN JAH 02-05 | CHECK SMM 02-05 | DATE | | |
| | | QUANT. JAH 02-05 | CHECK SMM 02-05 | BY | | |

| NO. | DATE | DESIGN REV. BY | MAPS CORR. BY | PARCELS AFFECTED | REQUEST BY | REMARKS |
|---|---|---|---|---|---|---|
| | | ORIGINAL SUBMISSION FOR AUTHORIZATION | | | | |
| | DATE | REVISIONS | | | | |

SHEET NO. RD-10

UTAH COUNTY

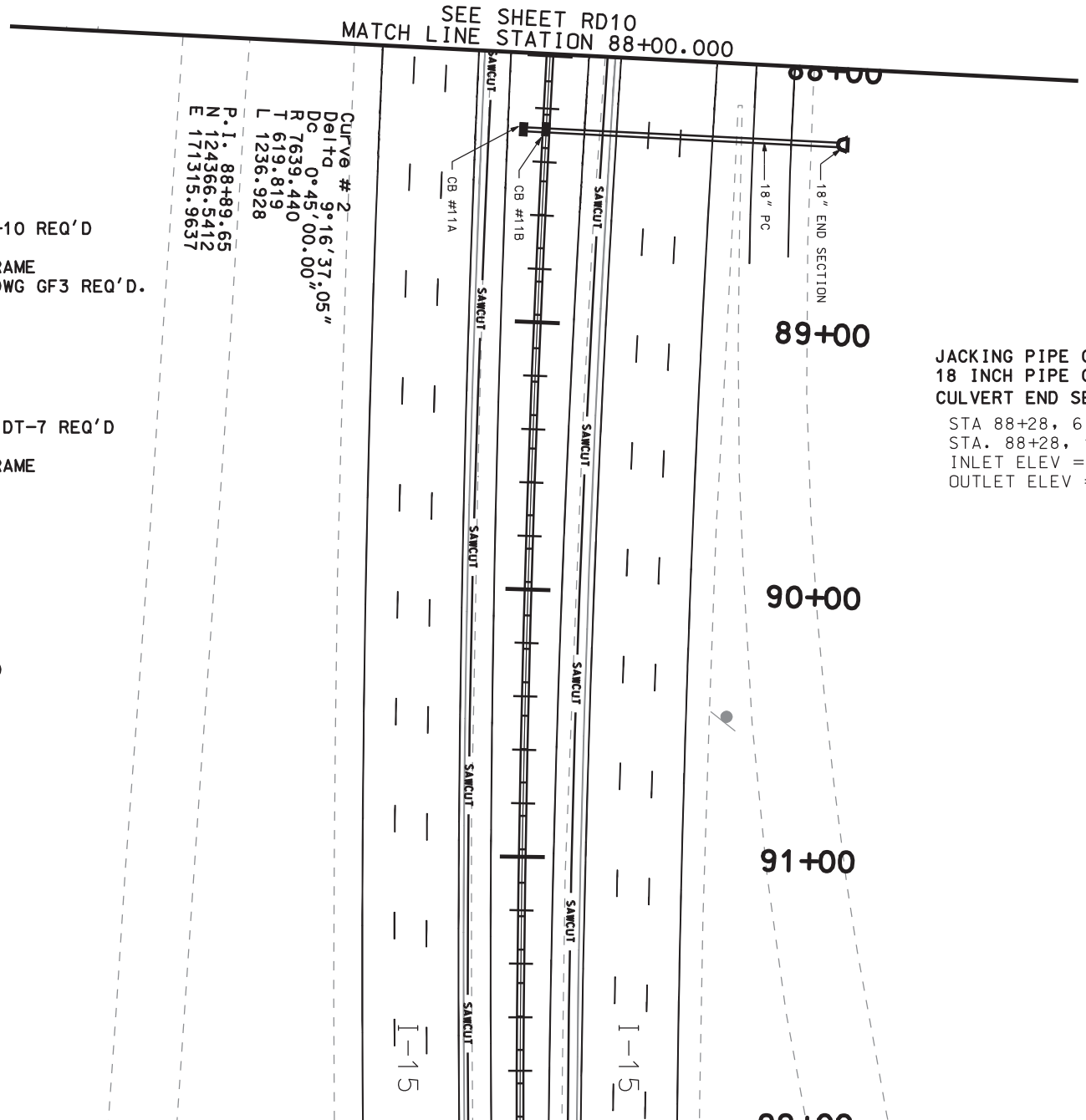


**CATCH BASIN NO. 11A**
**CATCH BASIN, STD DWG CB-10 REQ'D**
**(STD DWG CB-10)**
**RECTANGULAR GRATE AND FRAME**
**(STANDARD GRATING) STD DWG GF3 REQ'D.**
STA 88+28, 6.3 RT
COL A, LINE 1
TOB ELEV = 4520.65

**CATCH BASIN NO. 11B**
**CATCH BASIN, DETAIL DWG DT-7 REQ'D**
**(SEE SHEET DT-7)**
**RECTANGULAR GRATE AND FRAME**
**(STANDARD GRATING)**
**STD DWG GF3 REQ'D (2).**
STA 88+28, CL
COL A, LINE 1
TOB ELEV = 4520.90

**REMOVE CATCH BASIN REQ'D**
STA 88+28, CL

**JACKING PIPE CULVERT REQ'D**
**18 INCH PIPE CULVERT, CLASS A REQ'D.**
**CULVERT END SECTION 18 INCH REQ'D.**
STA 88+28, 6.3 RT TO
STA. 88+28, 110.0 LT
INLET ELEV = 4516.65
OUTLET ELEV = 4516.15

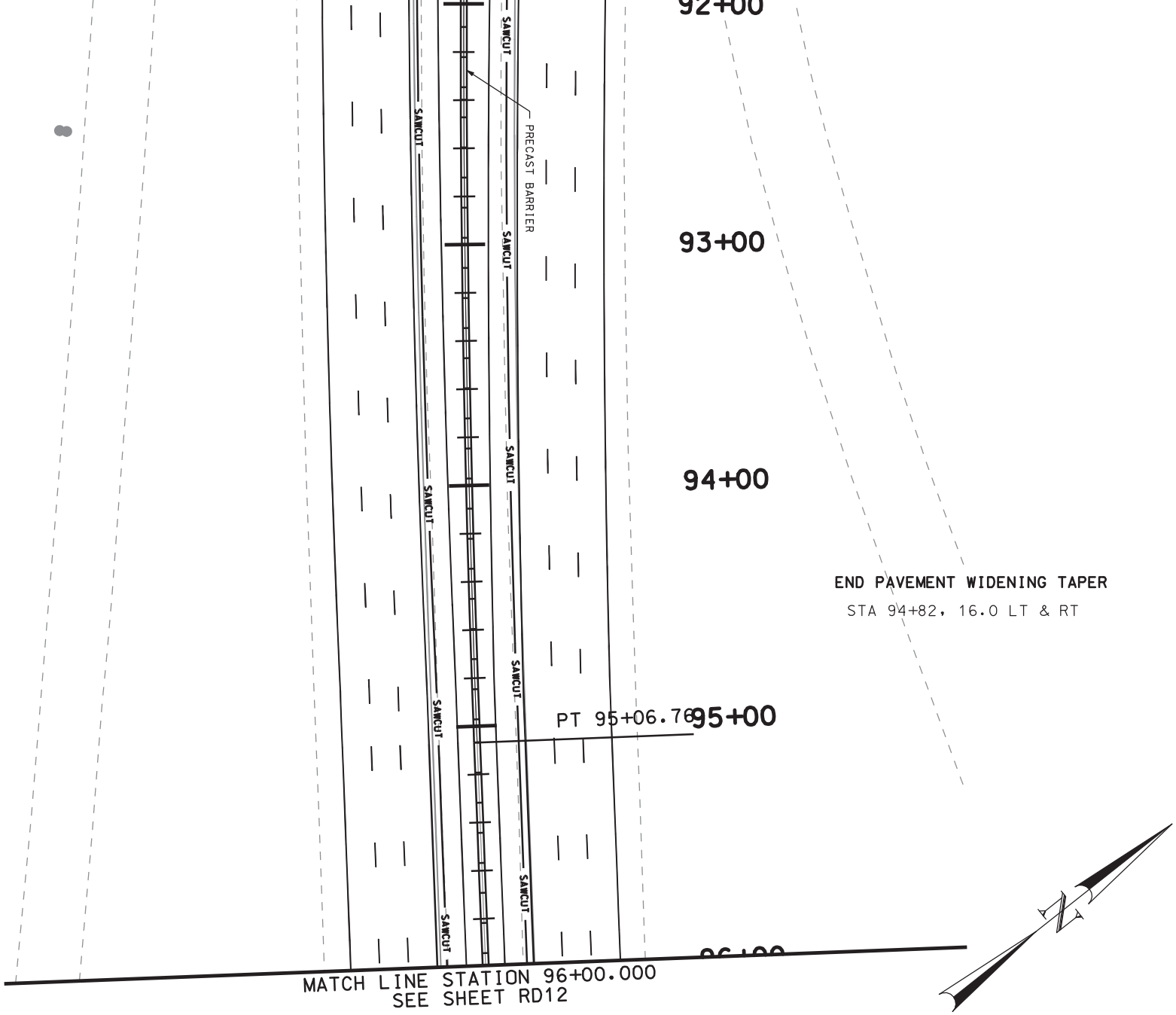


| | | | | | | |
|---|---|---|---|---|---|---|
| I-15; CORRIDOR | UTAH DEPARTMENT OF TRANSPORTATION | | | | | |
| IN UTAH COUNTY | REGION THREE -- OREM CITY, UTAH | | | | | |
| PLAN SHEET | ROADWAY DESIGN | | | | | |
| | APPROVAL RECOMM. ____ DATE ____ PROJECT DESIGN ENGINEER | DESIGN JAH 02-05 | CHECK SMM 02-05 | REVIEW | | |
| PROJECT NUMBER SP-15-6(52)241 | APPROVED FOR USE BY UDOT ____ DATE ____ PRECONSTRUCTION ENGINEER | DRAWN JAH 02-05 | CHECK SMM 02-05 | DATE ____ | | |
| | | QUANT. JAH 02-05 | CHECK SMM 02-05 | BY ____ | | |

| NO. | DATE | DESIGN REV. BY | MAPS CORR. BY | PARCELS AFFECTED | REQUEST BY | REMARKS |
|---|---|---|---|---|---|---|
| | | ORIGINAL SUBMISSION FOR AUTHORIZATION | | | | |
| DATE | | REVISIONS | | | | |

SHEET NO. RD-11

UTAH COUNTY

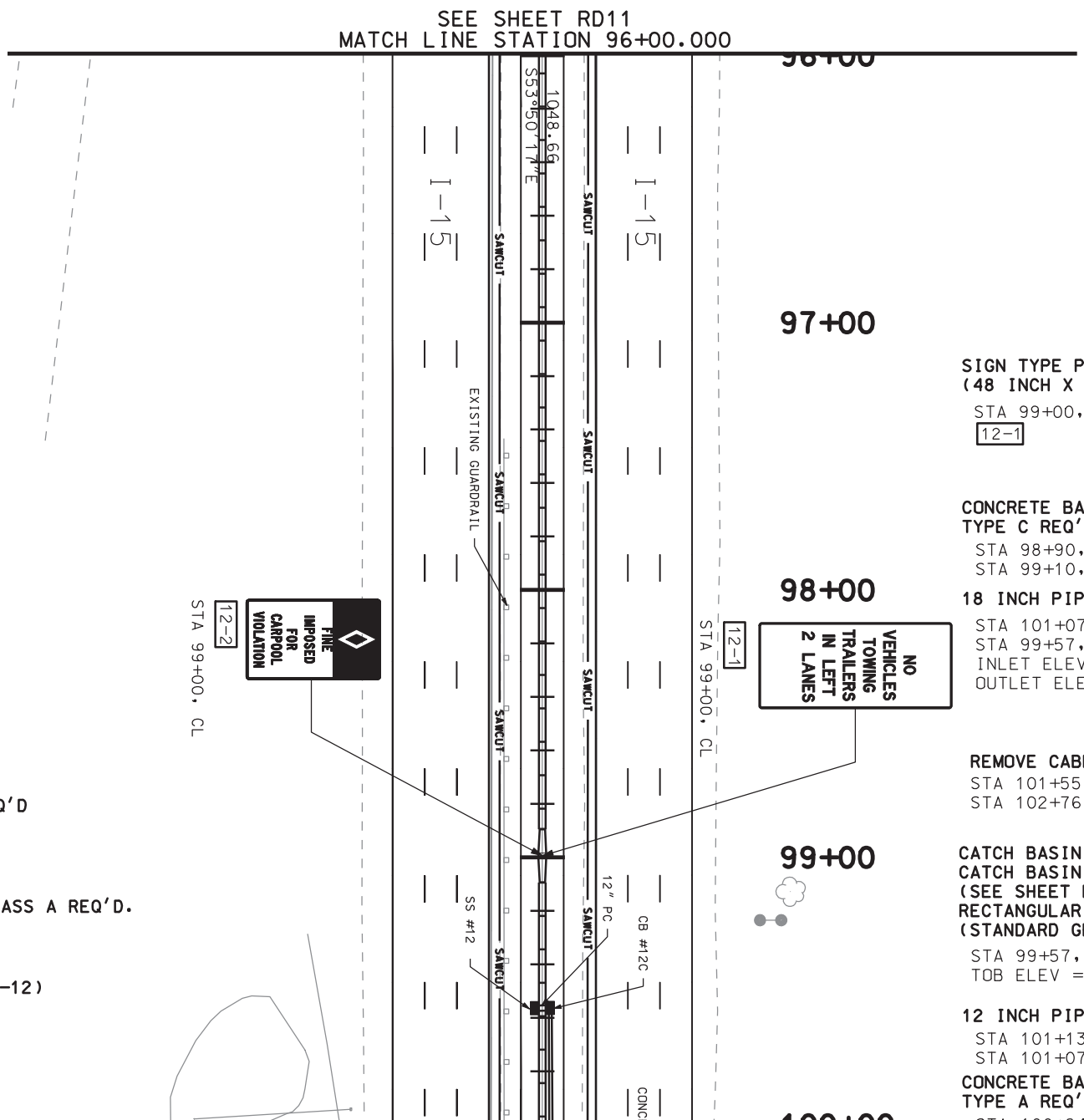


SIGN TYPE P-1 REQ'D
(48 INCH X 84 INCH)
STA 99+00, CL
12-1

CONCRETE BARRIER TRANSITION
TYPE C REQ'D
STA 98+90, CL TO
STA 99+10, CL

18 INCH PIPE CULVERT, CLASS A REQ'D.
STA 101+07, 3.5 LT TO
STA 99+57, 2.0 LT
INLET ELEV = 4529.60
OUTLET ELEV = 4528.40

REMOVE CABLE END SECTION REQ'D
STA 101+55 CL
STA 102+76 CL

CATCH BASIN NO. 12C
CATCH BASIN, STD DWG CB-10 REQ'D
(SEE SHEET DT-6)
RECTANGULAR GRATE AND FRAME
(STANDARD GRATING) STD DWG GF3 REQ'D.
STA 99+57, 2.0 LT
TOB ELEV = 4532.41

12 INCH PIPE CULVERT, CLASS A REQ'D.
STA 101+13, 3.5 RT TO
STA 101+07, 3.5 LT

CONCRETE BARRIER TRANSITION
TYPE A REQ'D

SIGN TYPE P-1 REQ'D
(48 INCH X 84 INCH)
STA 99+00, CL
12-2

REMOVE GUARDRAIL
STA 97+40, RT TO
STA 101+15, RT

REMOVE CRASH CUSHION REQ'D
STA 97+40, RT

12 INCH PIPE CULVERT, CLASS A REQ'D.
STA 99+57, 2.0 RT TO
STA 99+57, 2.0 LT

STORM SUMP REQ'D (NO. SS-12)
MANHOLE FRAME AND GRATED
COVER STD GF1 REQ'D.
(SEE SHEET DT-6)
STA 99+57, 2.0 RT
TOB ELEV = 4532.41

STA 100+84, CL TO
STA 101+06, CL

STA 103+32, CL TO
STA 103+52, CL

**PRECAST CONCRETE FULL BARRIER (NEW JERSEY SHAPE) REQ'D**

STA 103+52, CL TO
STA 108+20, CL

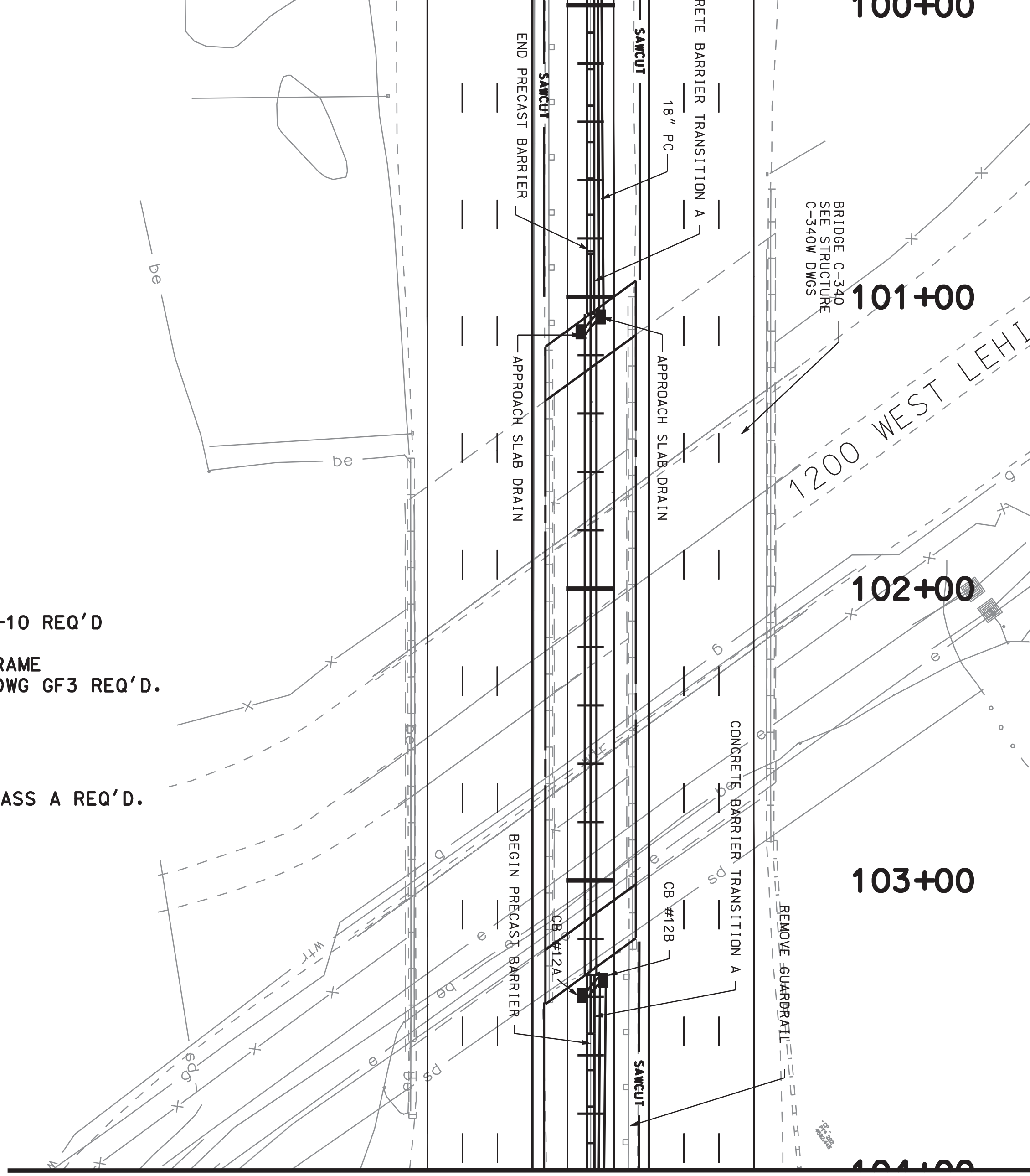


**CATCH BASIN NO. 12A**
**CATCH BASIN, STD DWG CB-10 REQ'D**
**(STD DWG CB-10)**
**RECTANGULAR GRATE AND FRAME**
**(STANDARD GRATING) STD DWG GF3 REQ'D.**

STA 103+40, 3.5 RT
COL A, LINE 1
TOB ELEV = 4534.36

**12 INCH PIPE CULVERT, CLASS A REQ'D.**

STA 103+40, 3.5 RT TO
STA 103+35, 3.5 LT

**CATCH BASIN NO. 12B**
**CATCH BASIN, STD DWG CB-10 REQ'D**
**(STD DWG CB-10)**
**RECTANGULAR GRATE AND FRAME**
**(STANDARD GRATING) STD DWG GF3 REQ'D.**

STA 103+35, 3.5 LT
COL A, LINE 1
TOB ELEV = 4534.39

**18 INCH PIPE CULVERT, CLASS A REQ'D.**

STA 103+35, 3.50 LT TO
STA 104+00, LT

**REMOVE GUARDRAIL REQ'D**

STA 103+20, LT TO
STA 104+00, LT

MATCH LINE STATION 104+00.000
SEE SHEET RD13

SHEET NO. RD-12 | UTAH COUNTY

I-15; CORRIDOR
IN UTAH COUNTY
PLAN SHEET
PROJECT NUMBER SP-15-6(52)241

UTAH DEPARTMENT OF TRANSPORTATION
REGION THREE -- OREM CITY, UTAH
ROADWAY DESIGN

| | | | | |
|---|---|---|---|---|
| APPROVAL RECOMM. DATE PROJECT DESIGN ENGINEER | DESIGN JAH 02-05 | CHECK SMM 02-05 | REVIEW |
| APPROVED FOR USE BY UDOT DATE PRECONSTRUCTION ENGINEER | DRAWN JAH 02-05 | CHECK SMM 02-05 | DATE |
| | QUANT. JAH 02-05 | CHECK SMM 02-05 | BY |

| NO. | DATE | DESIGN REV.BY | MAPS CORR.BY | PARCELS AFFECTED | REQUEST BY | REMARKS |
|---|---|---|---|---|---|---|
| | | ORIGINAL SUBMISSION FOR AUTHORIZATION | | | | |
| | DATE | REVISIONS | | | | |

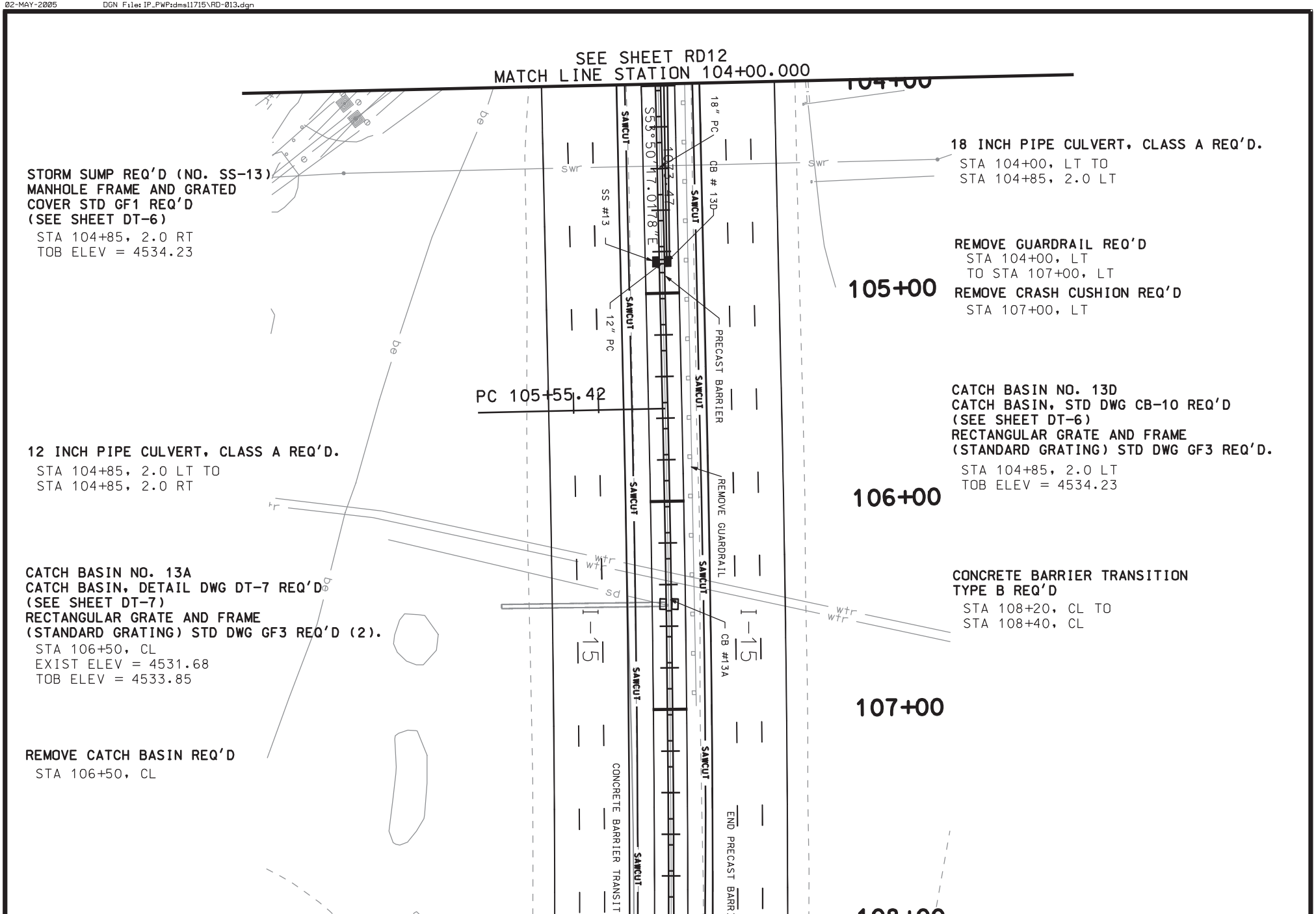
SEE SHEET RD12
MATCH LINE STATION 104+00.000
104+00
105+00
106+00
107+00
108+00
STORM SUMP REQ'D (NO. SS-13)
MANHOLE FRAME AND GRATED
COVER STD GF1 REQ'D
(SEE SHEET DT-6)
STA 104+85, 2.0 RT
TOB ELEV = 4534.23
12 INCH PIPE CULVERT, CLASS A REQ'D.
STA 104+85, 2.0 LT TO
STA 104+85, 2.0 RT
CATCH BASIN NO. 13A
CATCH BASIN, DETAIL DWG DT-7 REQ'D
(SEE SHEET DT-7)
RECTANGULAR GRATE AND FRAME
(STANDARD GRATING) STD DWG GF3 REQ'D (2).
STA 106+50, CL
EXIST ELEV = 4531.68
TOB ELEV = 4533.85
REMOVE CATCH BASIN REQ'D
STA 106+50, CL
18 INCH PIPE CULVERT, CLASS A REQ'D.
STA 104+00, LT TO
STA 104+85, 2.0 LT
REMOVE GUARDRAIL REQ'D
STA 104+00, LT
TO STA 107+00, LT
REMOVE CRASH CUSHION REQ'D
STA 107+00, LT
CATCH BASIN NO. 13D
CATCH BASIN, STD DWG CB-10 REQ'D
(SEE SHEET DT-6)
RECTANGULAR GRATE AND FRAME
(STANDARD GRATING) STD DWG GF3 REQ'D.
STA 104+85, 2.0 LT
TOB ELEV = 4534.23
CONCRETE BARRIER TRANSITION
TYPE B REQ'D
STA 108+20, CL TO
STA 108+40, CL
PC 105+55.42
S53°50'47.01"E
1073.47
18" PC
CB # 13D
SS #13
12" PC
PRECAST BARRIER
REMOVE GUARDRAIL
CB #13A
CONCRETE BARRIER TRANSITION
END PRECAST BARRIER
SAWCUT
I-15
swr
be
wtr
ps

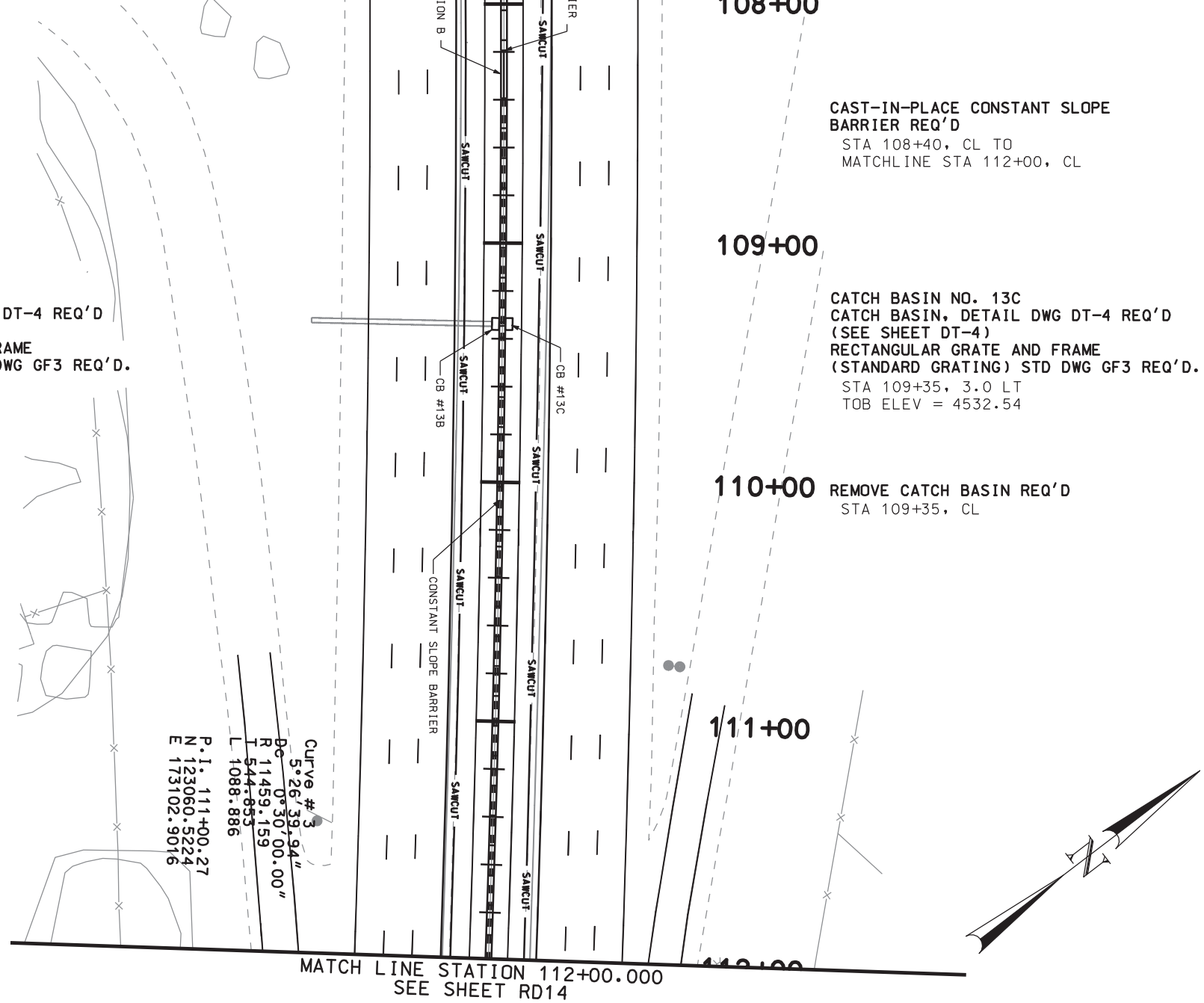


| | | | | | |
|---|---|---|---|---|---|
| I-15; CORRIDOR | UTAH DEPARTMENT OF TRANSPORTATION | | | | |
| IN UTAH COUNTY | REGION THREE -- OREM CITY, UTAH | | | | |
| PLAN SHEET | ROADWAY DESIGN | | | | |
| PROJECT NUMBER SP-15-6(52)241 | APPROVAL RECOMM. ____ DATE ____ PROJECT DESIGN ENGINEER | DESIGN JAH 02-05 | CHECK SMM 02-05 | REVIEW | |
| | APPROVED FOR USE BY UDOT ____ DATE ____ PRECONSTRUCTION ENGINEER | DRAWN JAH 02-05 | CHECK SMM 02-05 | DATE ____ | |
| | | QUANT. JAH 02-05 | CHECK SMM 02-05 | BY ____ | |

| NO. | DATE | DESIGN REV. BY | MAPS CORR. BY | PARCELS AFFECTED | REQUEST BY | REMARKS |
|---|---|---|---|---|---|---|
| | | ORIGINAL SUBMISSION FOR AUTHORIZATION | | | | |
| DATE | | REVISIONS | | | | |

SHEET NO. RD-13

UTAH COUNTY

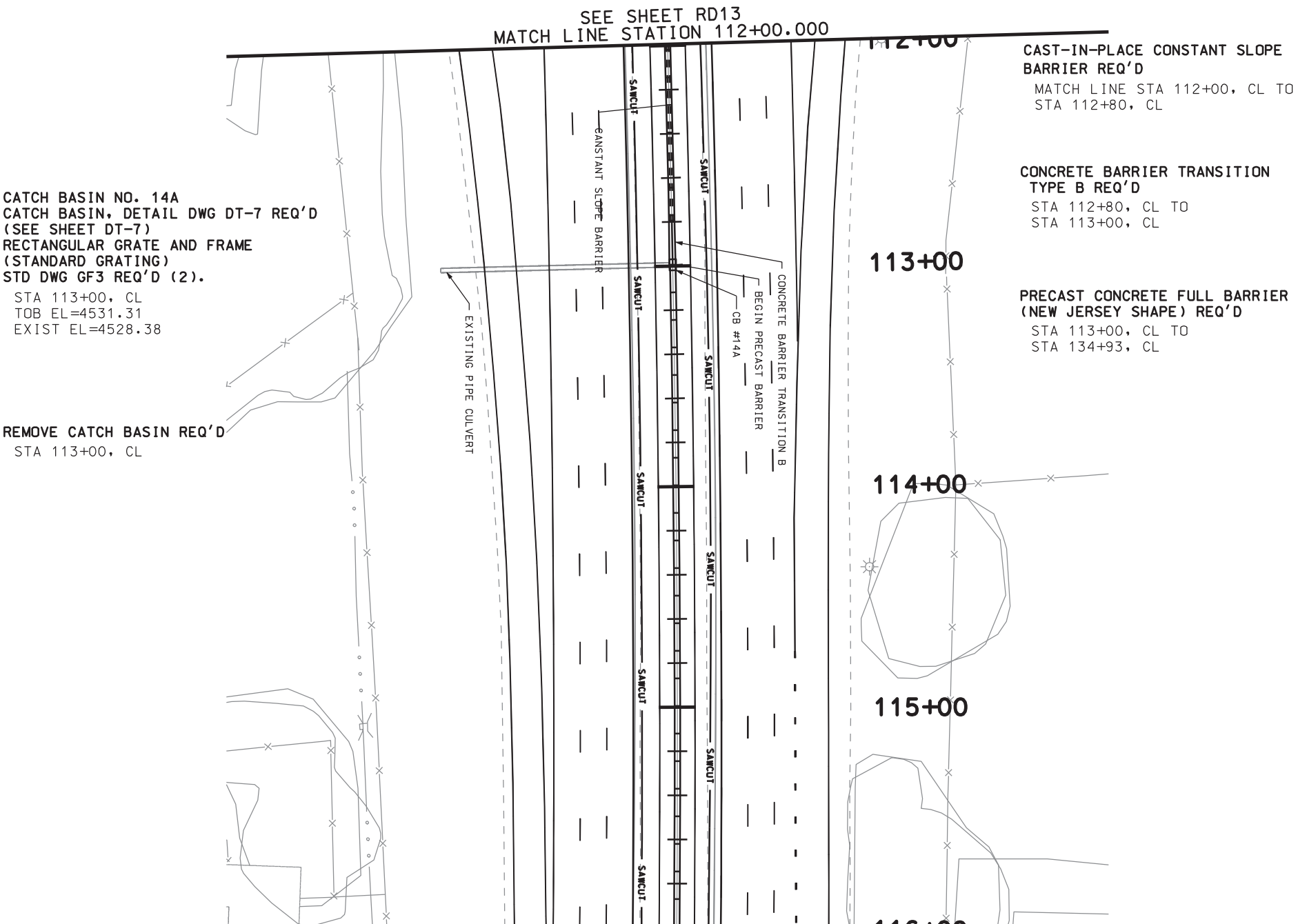
SEE SHEET RD13
MATCH LINE STATION 112+00.000
CAST-IN-PLACE CONSTANT SLOPE BARRIER REQ'D
MATCH LINE STA 112+00, CL TO STA 112+80, CL
CONCRETE BARRIER TRANSITION TYPE B REQ'D
STA 112+80, CL TO STA 113+00, CL
PRECAST CONCRETE FULL BARRIER (NEW JERSEY SHAPE) REQ'D
STA 113+00, CL TO STA 134+93, CL
CATCH BASIN NO. 14A
CATCH BASIN, DETAIL DWG DT-7 REQ'D
(SEE SHEET DT-7)
RECTANGULAR GRATE AND FRAME
(STANDARD GRATING)
STD DWG GF3 REQ'D (2).
STA 113+00, CL
TOB EL=4531.31
EXIST EL=4528.38
REMOVE CATCH BASIN REQ'D
STA 113+00, CL
CONSTANT SLOPE BARRIER
EXISTING PIPE CULVERT
CONCRETE BARRIER TRANSITION B
BEGIN PRECAST BARRIER
CB #14A
SAWCUT
113+00
114+00
115+00

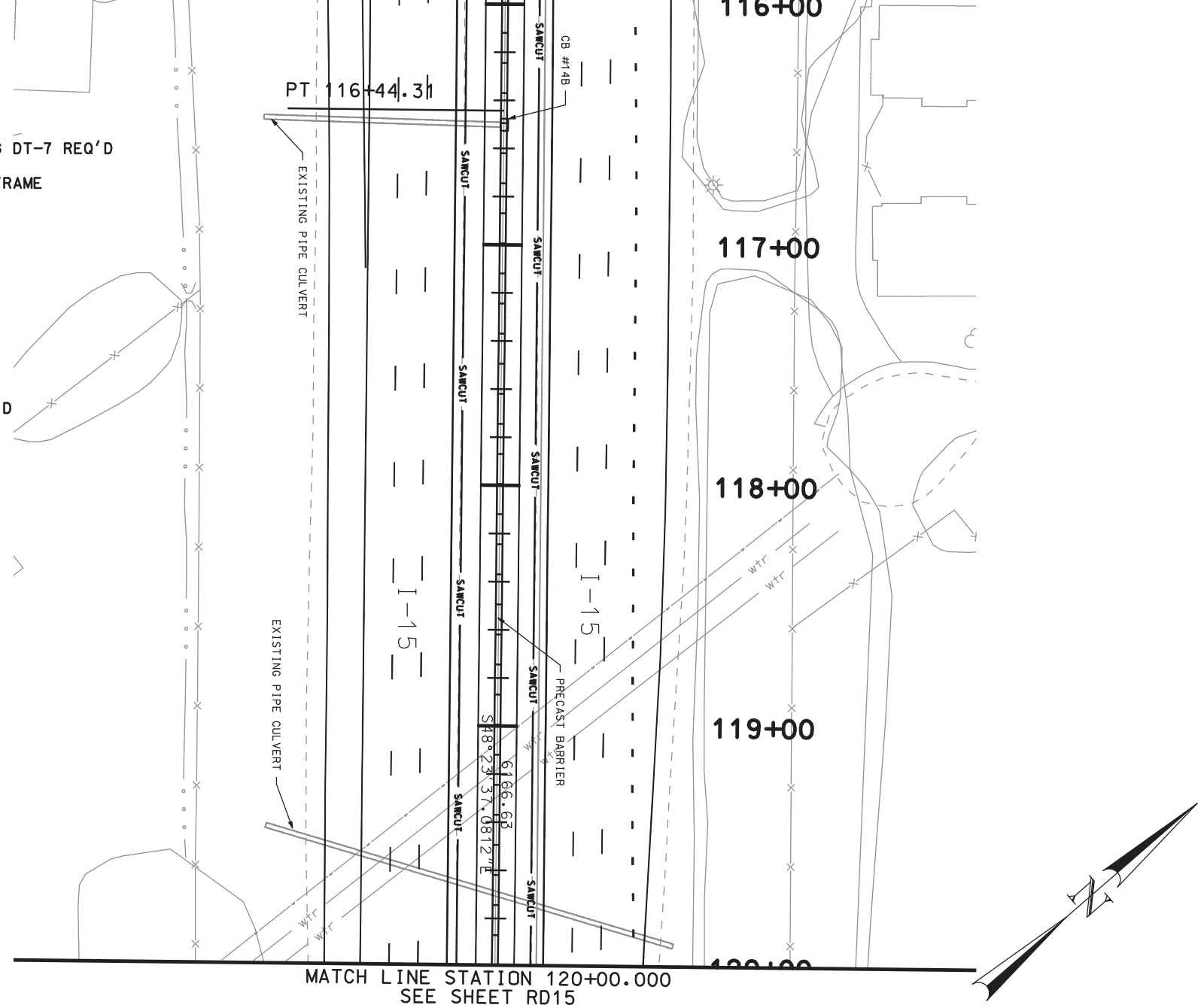


CATCH BASIN NO. 14B
CATCH BASIN, DETAIL DWG DT-7 REQ'D
(SEE SHEET DT-7)
RECTANGULAR GRATE AND FRAME
(STANDARD GRATING)
STD DWG GF3 REQ'D (2).
STA 116+50, CL
TOB EL=4530.6
EXIST EL=4527.7

REMOVE CATCH BASIN REQ'D
STA 116+50, CL

| | | | | | |
|---|---|---|---|---|---|
| I-15; CORRIDOR | UTAH DEPARTMENT OF TRANSPORTATION | | | | |
| IN UTAH COUNTY | REGION THREE -- OREM CITY, UTAH | | | | |
| PLAN SHEET | ROADWAY DESIGN | | | | |
| | APPROVAL RECOMM. DATE PROJECT DESIGN ENGINEER | DESIGN JAH 02-05 | CHECK SMM 02-05 | REVIEW | |
| | | DRAWN JAH 02-05 | CHECK SMM 02-05 | DATE | |
| PROJECT NUMBER SP-15-6(52)241 | APPROVED FOR USE BY UDOT DATE PRECONSTRUCTION ENGINEER | QUANT. JAH 02-05 | CHECK SMM 02-05 | BY | |

| NO. | DATE | DESIGN REV. BY | MAPS CORR. BY | PARCELS AFFECTED | REQUEST BY | REMARKS |
|---|---|---|---|---|---|---|
| | | ORIGINAL SUBMISSION FOR AUTHORIZATION | | | | |
| | DATE | REVISIONS | | | | |

UTAH COUNTY

SHEET NO. RD-14

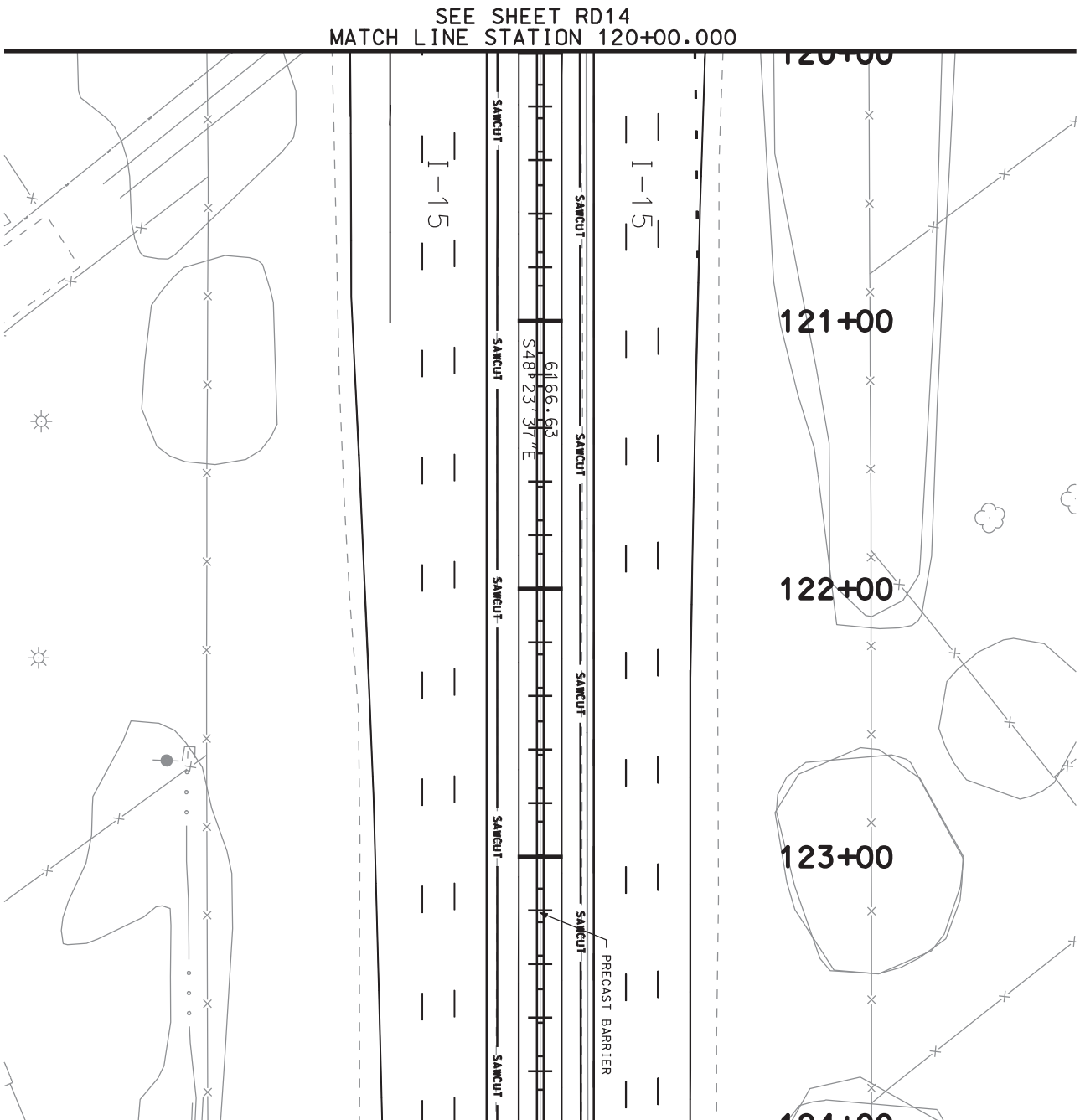
SEE SHEET RD14
MATCH LINE STATION 120+00.000
120+00
121+00
122+00
123+00
124+00
I-15
I-15
SAWCUT
SAWCUT
SAWCUT
SAWCUT
SAWCUT
SAWCUT
SAWCUT
SAWCUT
6166.63
S48°23'37"E
PRECAST BARRIER

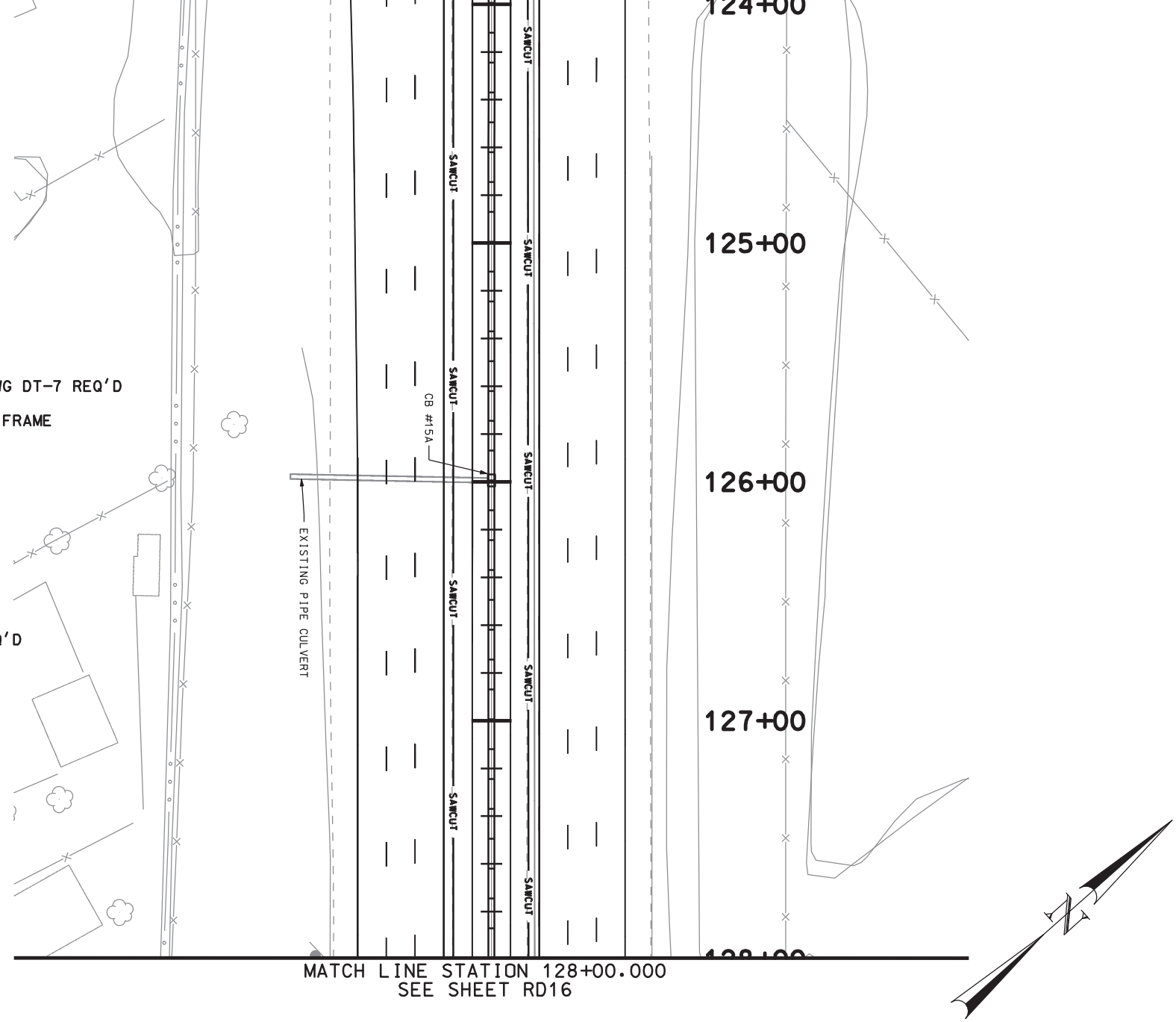


CATCH BASIN NO. 15A
CATCH BASIN, DETAIL DWG DT-7 REQ'D
(SEE SHEET DT-7)
RECTANGULAR GRATE AND FRAME
(STANDARD GRATING)
STD DWG GF3 REQ'D (2).
STA 126+00, CL
TOB EL=4548.9
EXIST EL=4545.1

REMOVE CATCH BASIN REQ'D
STA 126+00, CL

MATCH LINE STATION 128+00.000
SEE SHEET RD16

| | | | | | | |
|---|---|---|---|---|---|---|
| SHEET NO. RD-15 | UTAH COUNTY | I-15; CORRIDOR IN UTAH COUNTY PLAN SHEET | UTAH DEPARTMENT OF TRANSPORTATION<br>REGION THREE -- OREM CITY, UTAH<br>ROADWAY DESIGN | | | |
| | | PROJECT NUMBER SP-15-6(52)241 | APPROVAL RECOMM. DATE PROJECT DESIGN ENGINEER | DESIGN JAH 02-05 | CHECK SMM 02-05 | REVIEW |
| | | | APPROVED FOR USE BY UDOT DATE PRECONSTRUCTION ENGINEER | DRAWN JAH 02-05 | CHECK SMM 02-05 | DATE |
| | | | | QUANT. JAH 02-05 | CHECK SMM 02-05 | BY |

| NO. | DATE | DESIGN REV. BY | MAPS CORR. BY | PARCELS AFFECTED | REQUEST BY | REMARKS |
|---|---|---|---|---|---|---|
| | | ORIGINAL SUBMISSION FOR AUTHORIZATION | | | | |
| DATE | | REVISIONS | | | | |

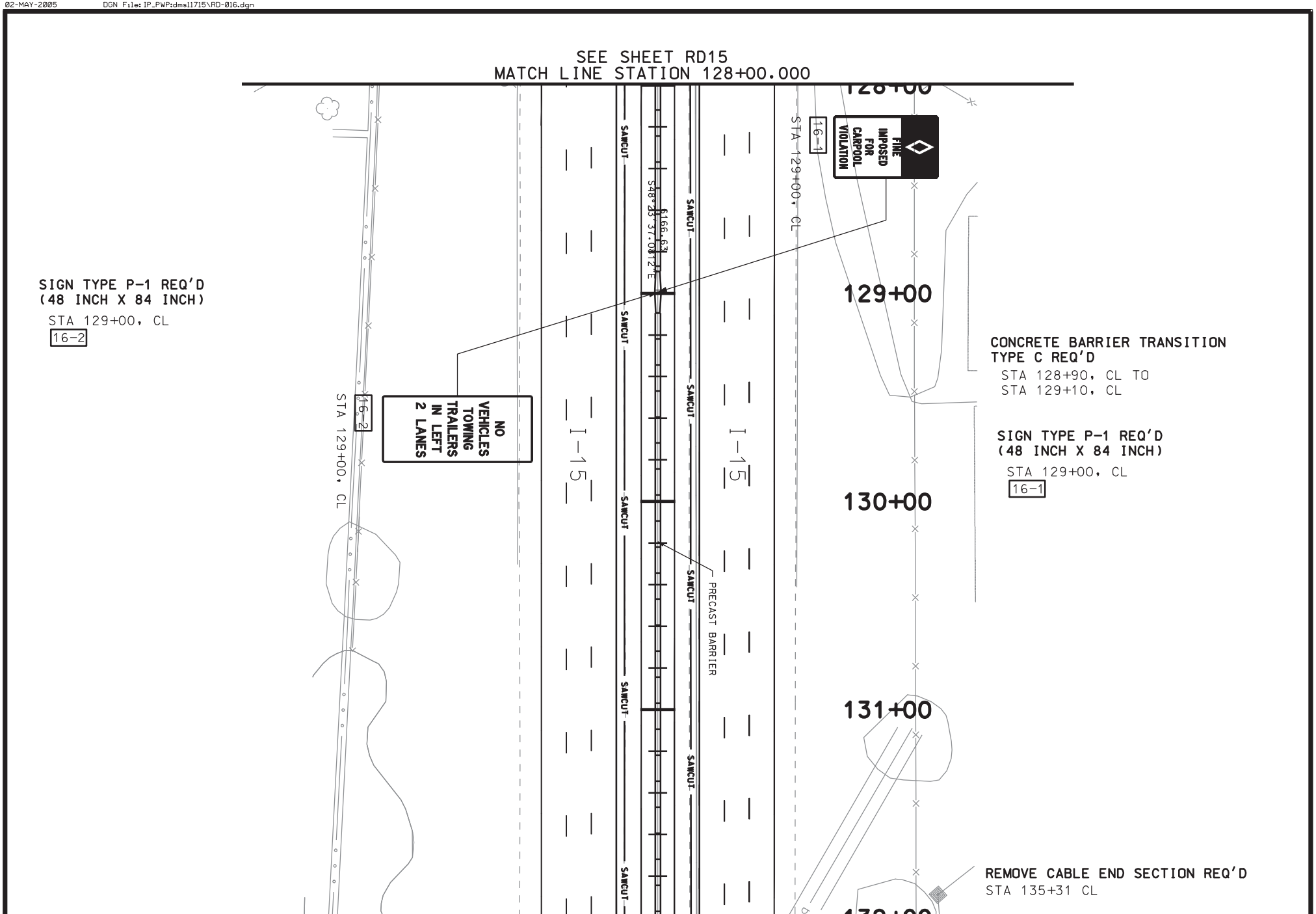
SEE SHEET RD15
MATCH LINE STATION 128+00.000
128+00
129+00
130+00
131+00
FINE IMPOSED FOR CARPOOL VIOLATION
16-1
STA 129+00, CL
SIGN TYPE P-1 REQ'D
(48 INCH X 84 INCH)
STA 129+00, CL
16-2
CONCRETE BARRIER TRANSITION
TYPE C REQ'D
STA 128+90, CL TO
STA 129+10, CL
SIGN TYPE P-1 REQ'D
(48 INCH X 84 INCH)
STA 129+00, CL
16-1
NO VEHICLES TOWING TRAILERS IN LEFT 2 LANES
16-2
STA 129+00, CL
I-15
I-15
SAWCUT
S48°23'37.0812"E
6166.631 FT
PRECAST BARRIER
REMOVE CABLE END SECTION REQ'D
STA 135+31 CL

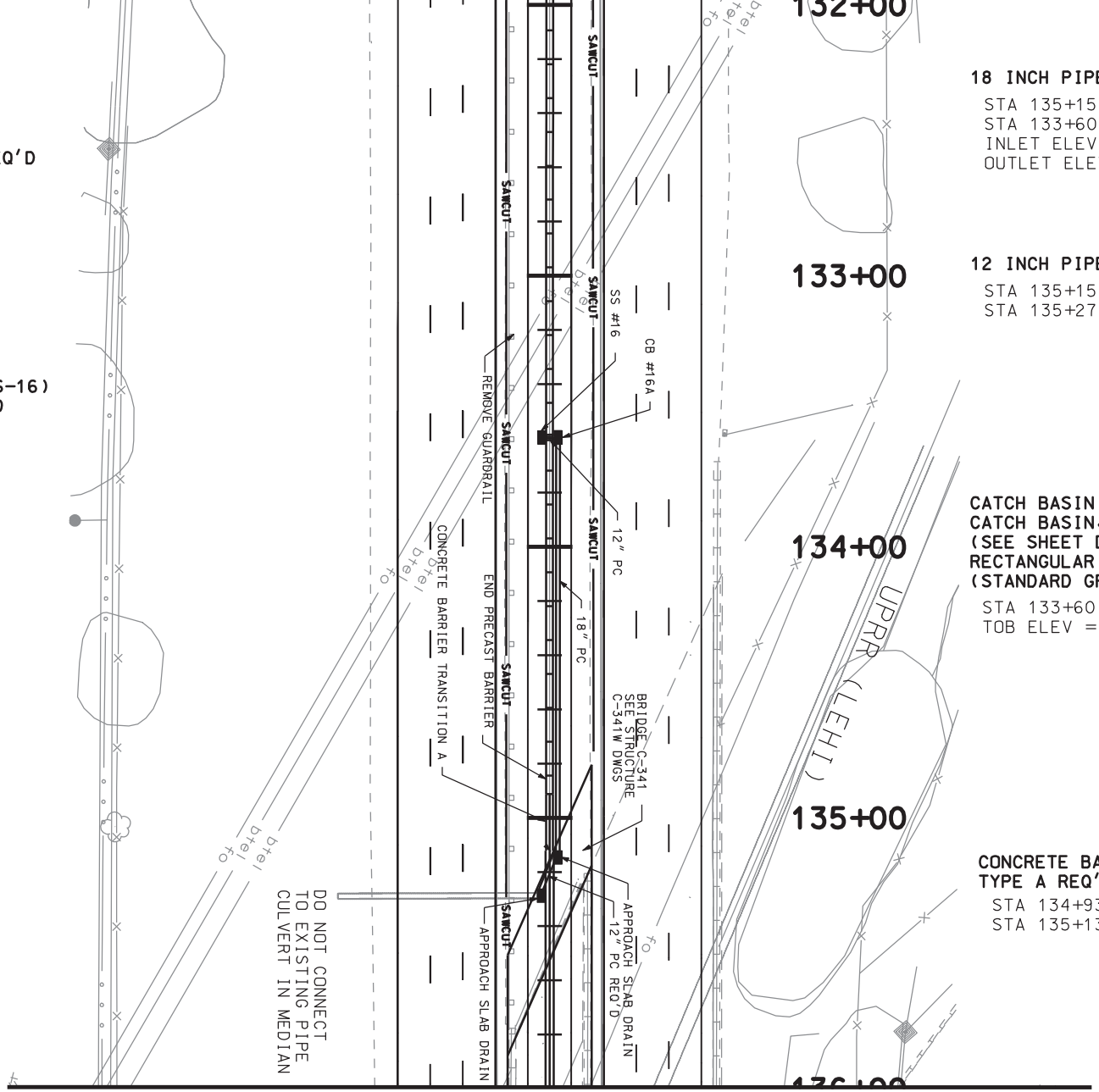


**REMOVE GUARDRAIL REQ'D**
STA 132+03 RT TO
STA 135+78 RT

**REMOVE CRASH CUSHION REQ'D**
STA 135+78 RT

**STORM SUMP REQ'D (NO. SS-16)**
**MANHOLE FRAME AND GRATED**
**COVER STD GF1 REQ'D**
**(SEE SHEET DT-6)**
STA 133+60, 2.0 RT
TOB ELEV = 4569.80

**12 INCH PIPE CULVERT,**
**CLASS A REQ'D.**
STA 133+60, 2.0 LT TO
STA 133+60, 2.0 RT

**18 INCH PIPE CULVERT, CLASS A REQ'D.**
STA 135+15, 3.5 LT TO
STA 133+60, 2.0 LT
INLET ELEV = 4569.7
OUTLET ELEV = 4566.8

**12 INCH PIPE CULVERT, CLASS A REQ'D.**
STA 135+15, 3.5 LT TO
STA 135+27, 3.5 RT

**CATCH BASIN NO. 16A**
**CATCH BASIN, STD DWG CB-10 REQ'D**
**(SEE SHEET DT-6)**
**RECTANGULAR GRATE AND FRAME**
**(STANDARD GRATING) STD DWG GF3 REQ'D.**
STA 133+60, 2.0 LT
TOB ELEV = 4569.80

**CONCRETE BARRIER TRANSITION**
**TYPE A REQ'D**
STA 134+93, CL TO
STA 135+13, CL

| | | | | | |
|---|---|---|---|---|---|
| I-15; CORRIDOR | UTAH DEPARTMENT OF TRANSPORTATION | | | | |
| IN UTAH COUNTY | REGION THREE -- OREM CITY, UTAH | | | | |
| PLAN SHEET | ROADWAY DESIGN | | | | |
| | APPROVAL RECOMM. ____ DATE ____ PROJECT DESIGN ENGINEER | DESIGN JAH 02-05 | CHECK SMM 02-05 | REVIEW | |
| | APPROVED FOR USE BY UDOT ____ DATE ____ PRECONSTRUCTION ENGINEER | DRAWN JAH 02-05 | CHECK SMM 02-05 | DATE ____ | |
| PROJECT NUMBER SP-15-6(52)241 | | QUANT. JAH 02-05 | CHECK SMM 02-05 | BY ____ | |

| NO. | DATE | DESIGN REV. BY | MAPS CORR. BY | PARCELS AFFECTED | REQUEST BY | REMARKS |
|---|---|---|---|---|---|---|
| | | ORIGINAL SUBMISSION FOR AUTHORIZATION | | | | |
| DATE | | REVISIONS | | | | |

UTAH COUNTY

SHEET NO. RD-16

SEE SHEET RD16
MATCH LINE STATION 136+00.000

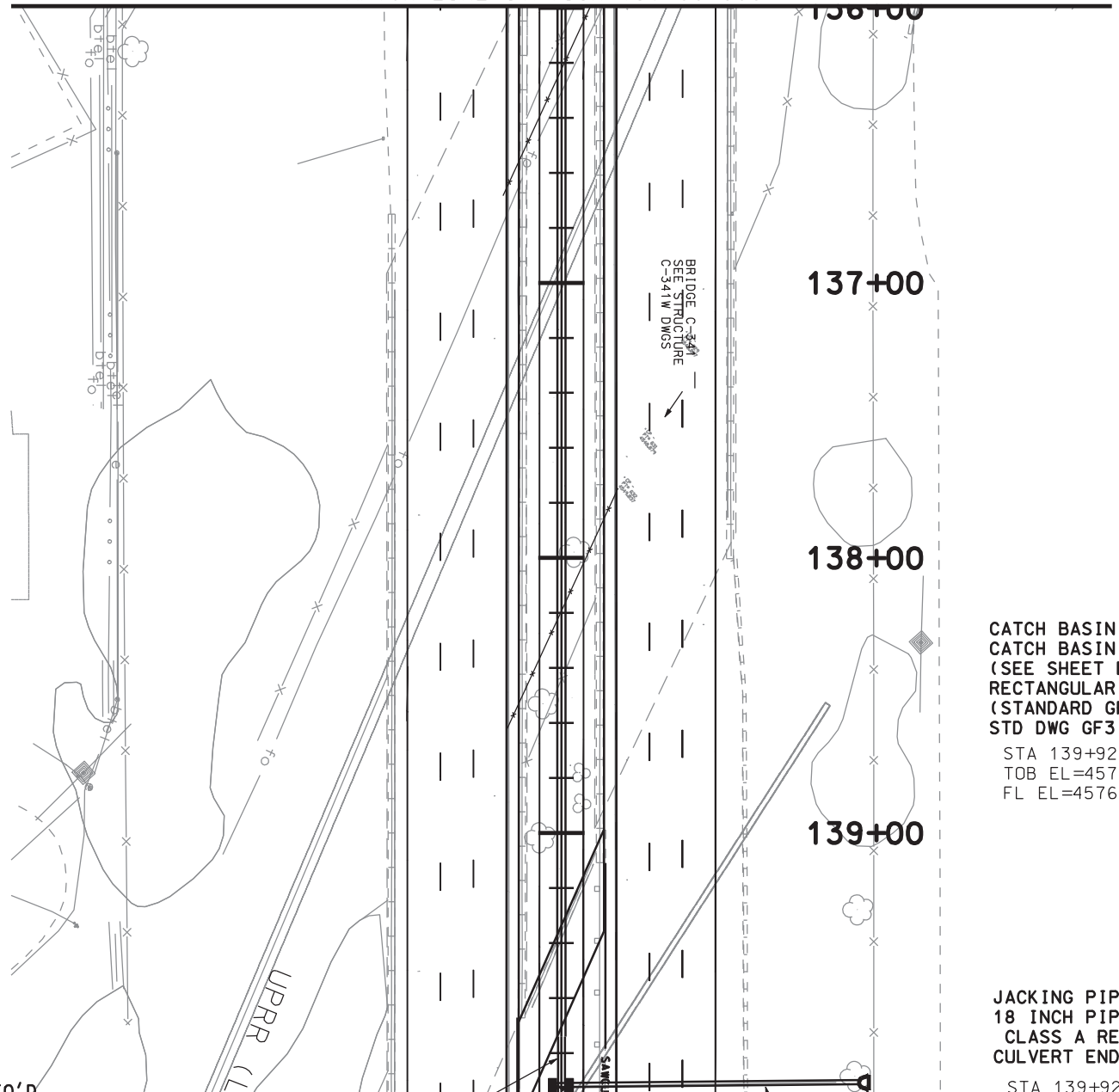


CATCH BASIN NO. 17A
CATCH BASIN, DETAIL DWG DT-7 REQ'D
(SEE SHEET DT-7)
RECTANGULAR GRATE AND FRAME
(STANDARD GRATING)
STD DWG GF3 REQ'D (2).

STA 139+92, CL
TOB EL=4579.90
FL EL=4576.90

JACKING PIPE CULVERT REQ'D
18 INCH PIPE CULVERT,
CLASS A REQ'D.
CULVERT END SECTION 18 INCH REQ'D.

STA 139+92, CL TO

CLEARING AND GRUBBING REQ'D

STA 140+22, 89 RT TO
STA 137+70, 56 LT

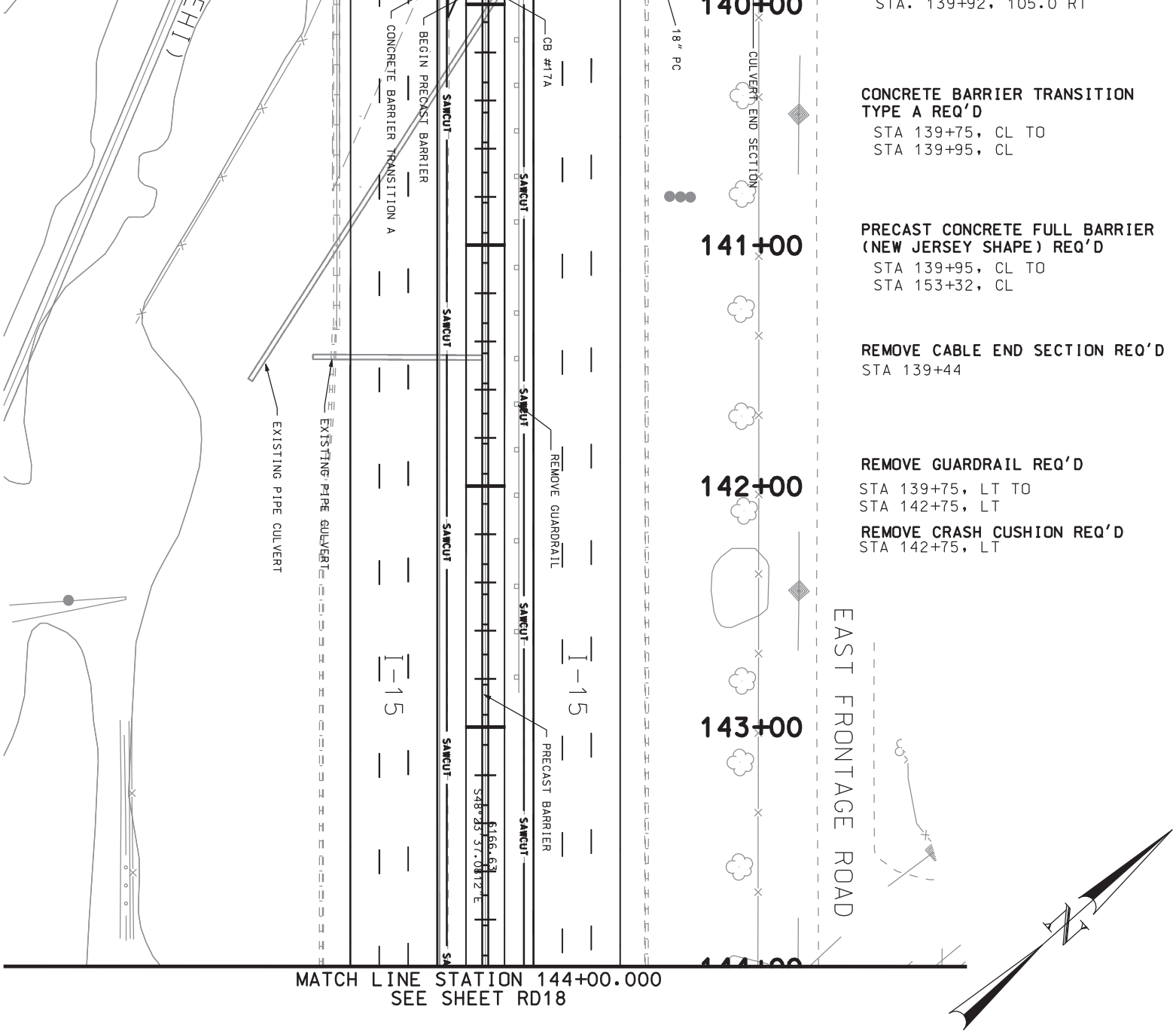


STA. 139+92, 105.0 RT

**CONCRETE BARRIER TRANSITION TYPE A REQ'D**
STA 139+75, CL TO
STA 139+95, CL

**PRECAST CONCRETE FULL BARRIER (NEW JERSEY SHAPE) REQ'D**
STA 139+95, CL TO
STA 153+32, CL

**REMOVE CABLE END SECTION REQ'D**
STA 139+44

**REMOVE GUARDRAIL REQ'D**
STA 139+75, LT TO
STA 142+75, LT

**REMOVE CRASH CUSHION REQ'D**
STA 142+75, LT

MATCH LINE STATION 144+00.000
SEE SHEET RD18

| | | | | | | |
|---|---|---|---|---|---|---|
| I-15; CORRIDOR | UTAH DEPARTMENT OF TRANSPORTATION | | | | | |
| IN UTAH COUNTY | REGION THREE -- OREM CITY, UTAH | | | | | |
| PLAN SHEET | ROADWAY DESIGN | | | | | |
| | APPROVAL RECOMM. DATE / PROJECT DESIGN ENGINEER | DESIGN JAH 02-05 | CHECK SMM 02-05 | REVIEW | | |
| PROJECT NUMBER SP-15-6(52)241 | APPROVED FOR USE BY UDOT DATE / PRECONSTRUCTION ENGINEER | DRAWN JAH 02-05 | CHECK SMM 02-05 | DATE | | |
| | | QUANT. JAH 02-05 | CHECK SMM 02-05 | BY | | |

| NO. | DATE | DESIGN REV. BY | MAPS CORR. BY | PARCELS AFFECTED | REQUEST BY | REMARKS |
|---|---|---|---|---|---|---|
| | | ORIGINAL SUBMISSION FOR AUTHORIZATION | | | | |
| DATE | | REVISIONS | | | | |

UTAH COUNTY

SHEET NO. RD-17

SEE SHEET RD17
MATCH LINE STATION 144+00.000

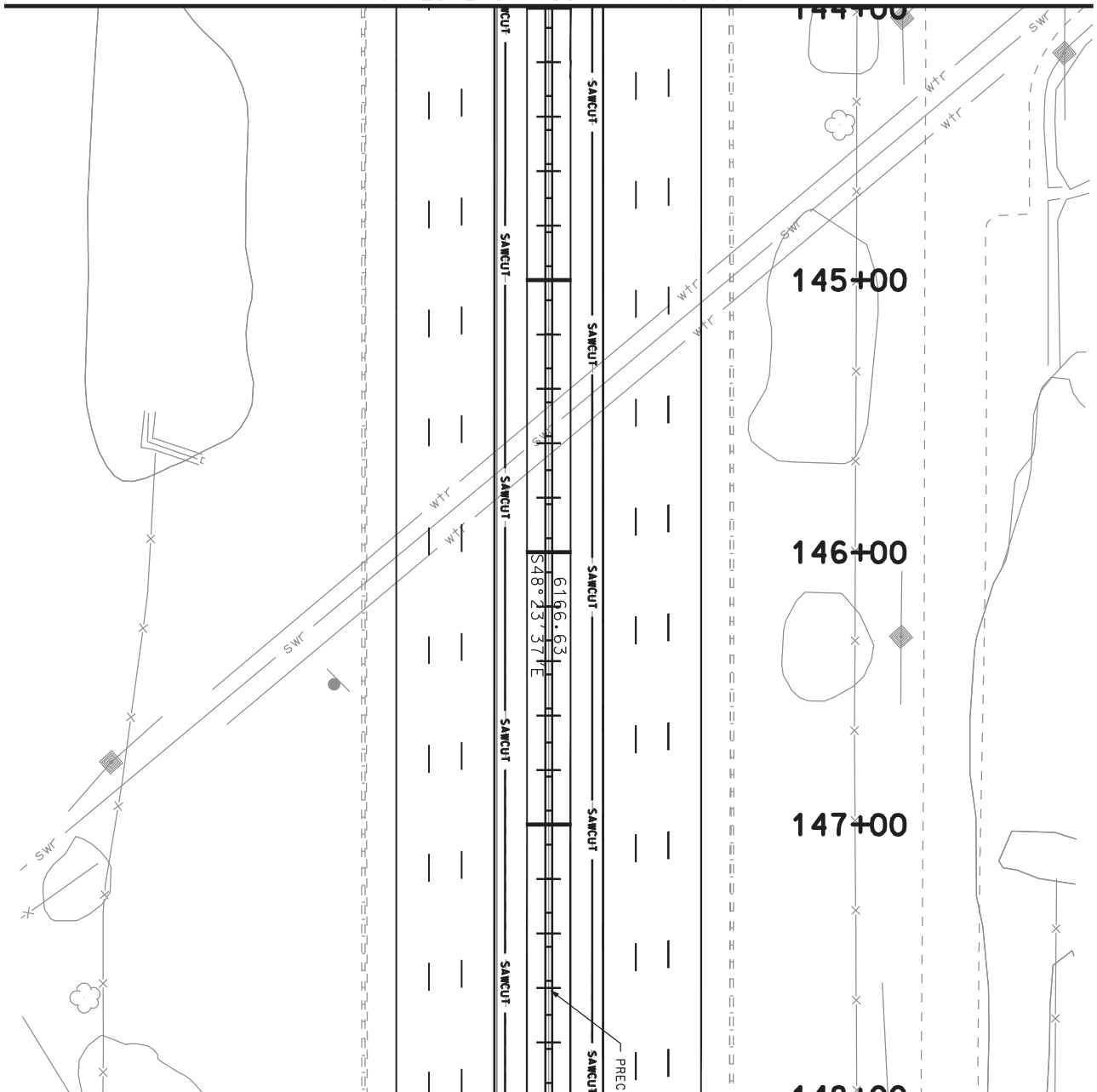

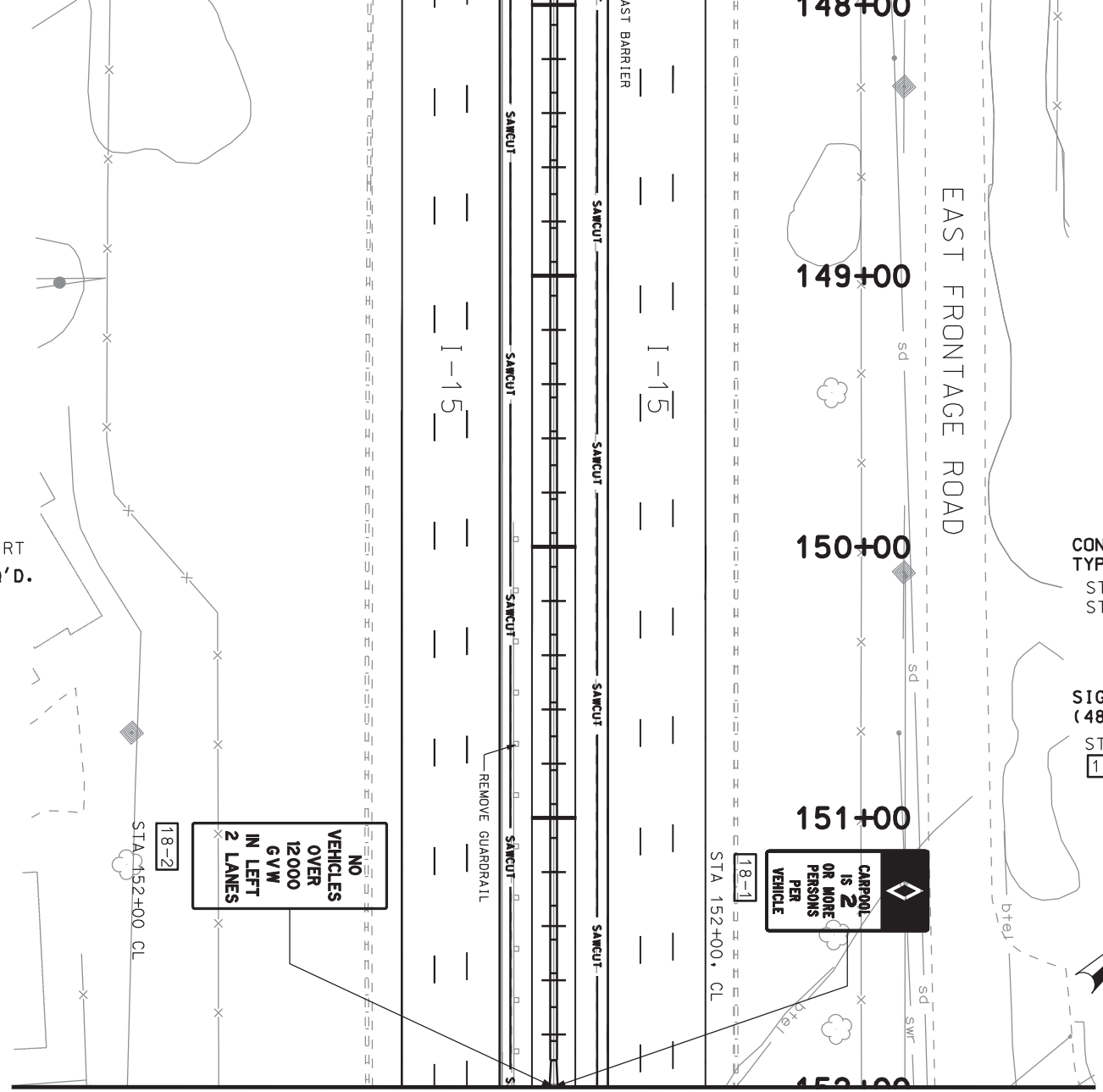


**REMOVE GUARDRAIL REQ'D.**
STA. 149+95, RT TO
MATCH LINE STA 152+00, RT

**REMOVE CRASH CUSHION REQ'D.**
STA. 149+95, RT

**SIGN TYPE P-1 REQ'D**
**(48 INCH X 84 INCH)**
STA 152+00, CL
18-2

**CONCRETE BARRIER TRANSITION**
**TYPE C REQ'D**
STA 151+90, CL TO
STA 152+10, CL

**SIGN TYPE P-1 REQ'D**
**(48 INCH X 96 INCH)**
STA 152+00, CL
18-1

MATCH LINE STATION 152+00.000
SEE SHEET RD19

| | | | | | |
|---|---|---|---|---|---|
| I-15; CORRIDOR | UTAH DEPARTMENT OF TRANSPORTATION | | | | |
| IN UTAH COUNTY | REGION THREE -- OREM CITY, UTAH | | | | |
| PLAN SHEET | ROADWAY DESIGN | | | | |
| | APPROVAL RECOMM. ____ DATE ____ PROJECT DESIGN ENGINEER | DESIGN JAH 02-05 | CHECK SMM 02-05 | REVIEW | |
| | APPROVED FOR USE BY UDOT ____ DATE ____ PRECONSTRUCTION ENGINEER | DRAWN JAH 02-05 | CHECK SMM 02-05 | DATE ____ | |
| PROJECT NUMBER SP-15-6(52)241 | | QUANT. JAH 02-05 | CHECK SMM 02-05 | BY ____ | |

| NO. | DATE | DESIGN REV.BY | MAPS CORR.BY | PARCELS AFFECTED | REQUEST BY | REMARKS |
|---|---|---|---|---|---|---|
| | | ORIGINAL SUBMISSION FOR AUTHORIZATION | | | | |
| DATE | | REVISIONS | | | | |

UTAH COUNTY

SHEET NO. RD-18

SEE SHEET RD18
MATCH LINE STATION 152+00.000

**REMOVE GUARDRAIL REQ'D.**
MATCH LINE STA. 152+00, RT TO
STA. 153+65, RT

**CATCH BASIN NO. 19A**
**CATCH BASIN, DETAIL DWG DT-7 REQ'D**
**(SEE SHEET DT-7)**
**RECTANGULAR GRATE AND FRAME**
**(STANDARD GRATING)**
**STD DWG GF3 REQ'D (2)**
STA 153+49, CL
TOB ELEV = 4581.54
FL ELEV = 4578.54

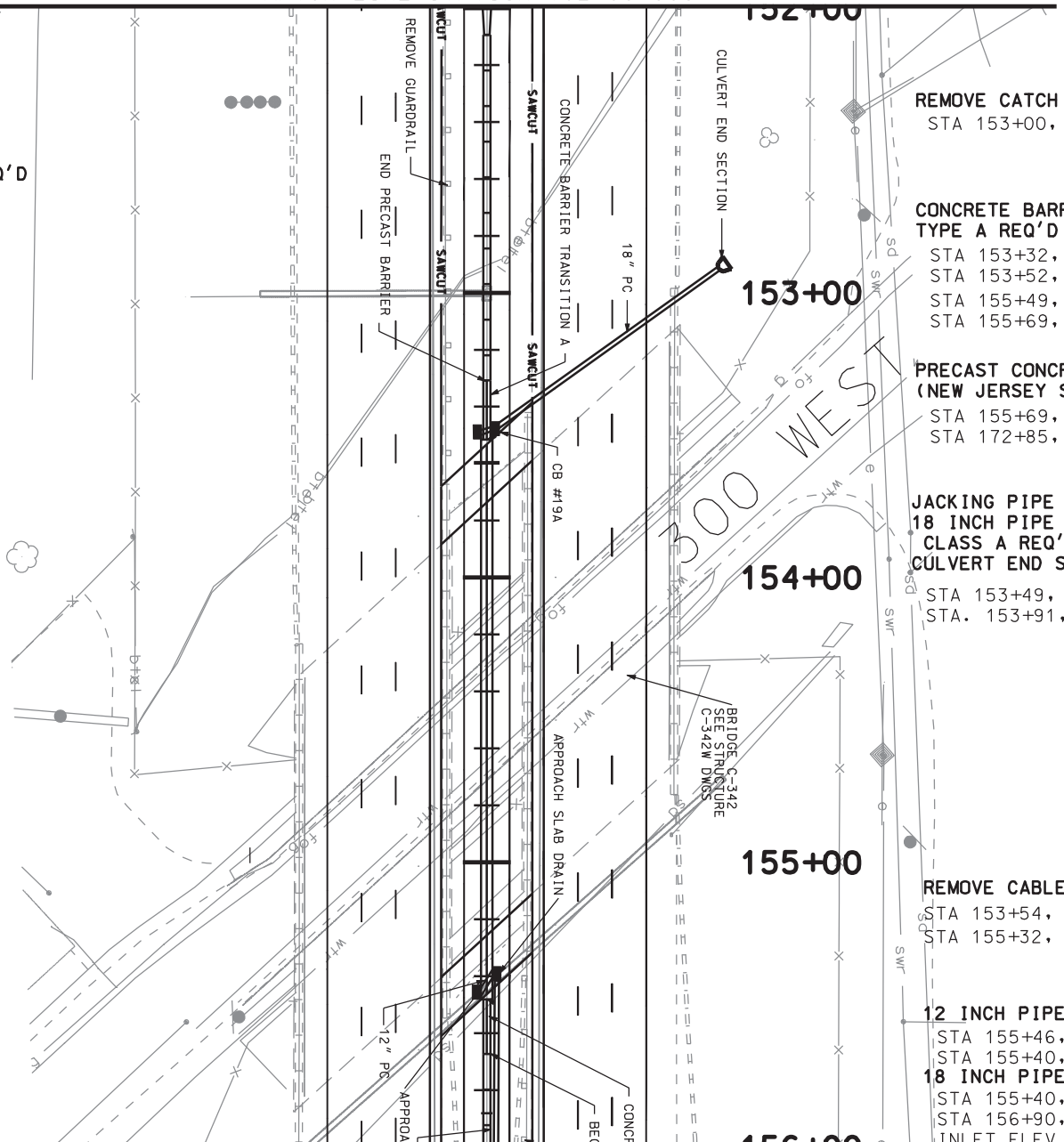


**REMOVE CATCH BASIN REQ'D**
STA 153+00, CL

**CONCRETE BARRIER TRANSITION**
**TYPE A REQ'D**
STA 153+32, CL TO
STA 153+52, CL
STA 155+49, CL TO
STA 155+69, CL

**PRECAST CONCRETE FULL BARRIER**
**(NEW JERSEY SHAPE) REQ'D**
STA 155+69, CL TO
STA 172+85, CL

**JACKING PIPE CULVERT REQ'D**
**18 INCH PIPE CULVERT,**
**CLASS A REQ'D.**
**CULVERT END SECTION 18 INCH REQ'D.**
STA 153+49, CL TO
STA. 153+91, 100.0 LT

**REMOVE CABLE END SECTION REQ'D**
STA 153+54, CL
STA 155+32, CL

**12 INCH PIPE CULVERT, CLASS A REQ'D.**
STA 155+46, 3.5 RT TO
STA 155+40, 3.5 LT
**18 INCH PIPE CULVERT, CLASS A REQ'D.**
STA 155+40, 3.5 LT TO
STA 156+90, 2.0 LT
INLET ELEV = 4575.80

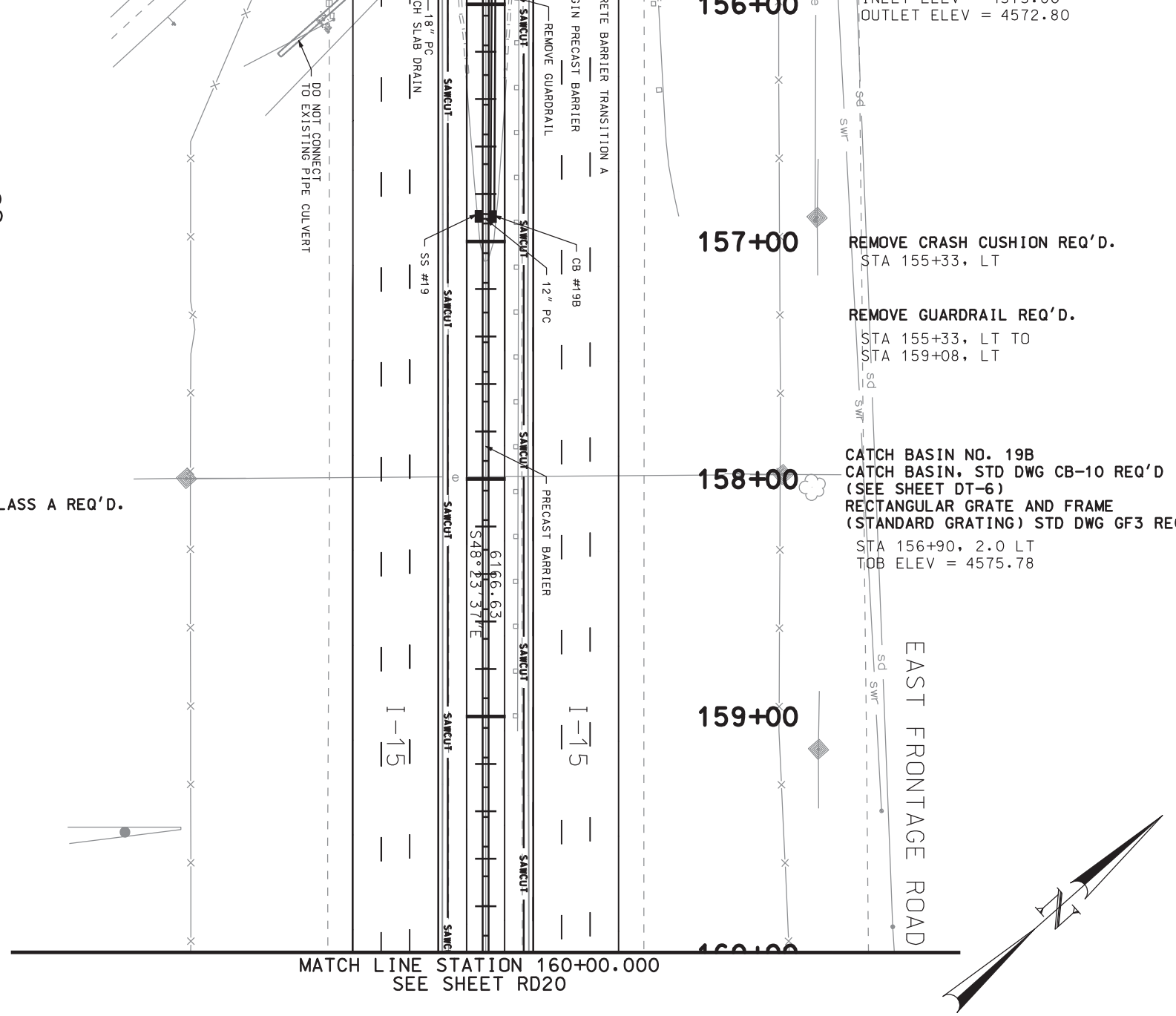


MATCH LINE STATION 160+00.000
SEE SHEET RD20

| | | | | | |
|---|---|---|---|---|---|
| I-15; CORRIDOR | UTAH DEPARTMENT OF TRANSPORTATION | | | | |
| IN UTAH COUNTY | REGION THREE -- OREM CITY, UTAH | | | | |
| PLAN SHEET | ROADWAY DESIGN | | | | |
| | APPROVAL RECOMM. DATE / PROJECT DESIGN ENGINEER | DESIGN JAH 02-05 | CHECK SMM 02-05 | REVIEW | |
| | APPROVED FOR USE BY UDOT DATE / PRECONSTRUCTION ENGINEER | DRAWN JAH 02-05 | CHECK SMM 02-05 | DATE | |
| PROJECT NUMBER SP-15-6(52)241 | | QUANT. JAH 02-05 | CHECK SMM 02-05 | BY | |

| NO. | DATE | DESIGN REV. BY | MAPS CORR. BY | PARCELS AFFECTED | REQUEST BY | REMARKS |
|---|---|---|---|---|---|---|
| | | ORIGINAL SUBMISSION FOR AUTHORIZATION | | | | |

DATE REVISIONS

UTAH COUNTY

SHEET NO. RD-19

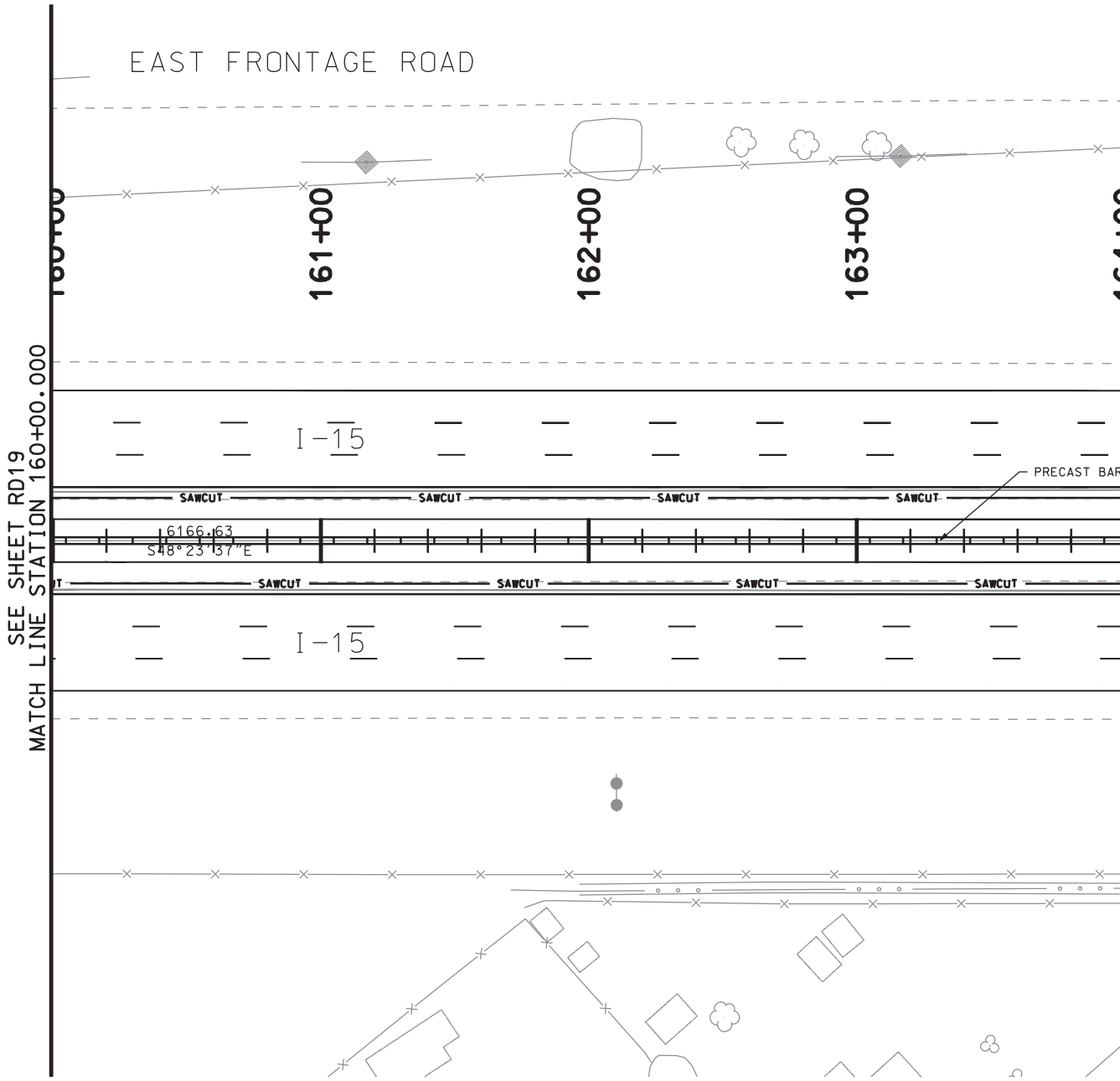


DGN File:IP_PWPsdms1715\RD-020.dgn

02-MAY-2005

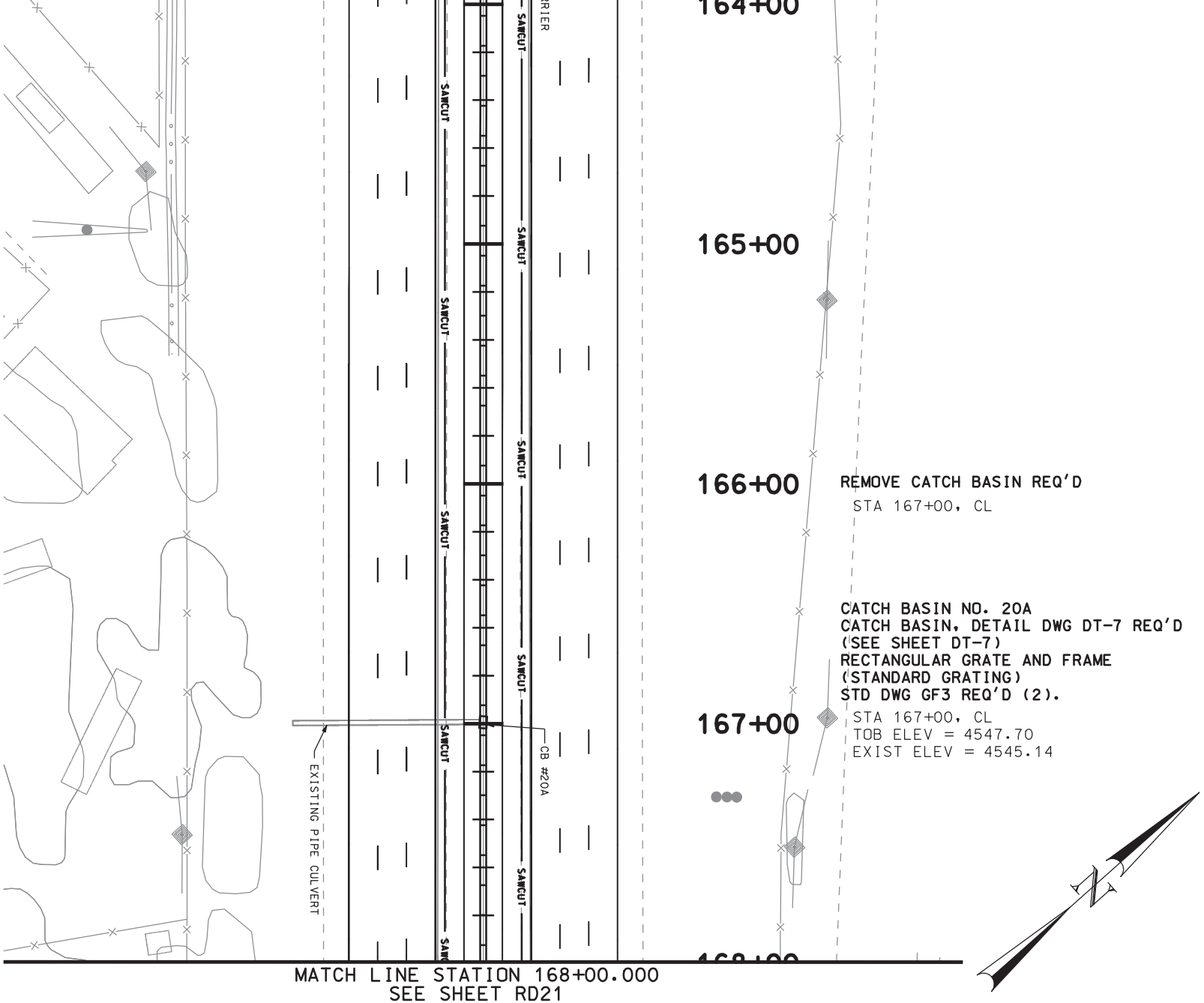


| | | | | | |
|---|---|---|---|---|---|
| I-15; CORRIDOR | UTAH DEPARTMENT OF TRANSPORTATION | | | | |
| IN UTAH COUNTY | REGION THREE -- OREM CITY, UTAH | | | | |
| PLAN SHEET | ROADWAY DESIGN | | | | |
| | APPROVAL RECOMM. DATE / PROJECT DESIGN ENGINEER | DESIGN JAH 02-05 | CHECK SMM 02-05 | REVIEW | |
| | APPROVED FOR USE BY UDOT DATE / PRECONSTRUCTION ENGINEER | DRAWN JAH 02-05 | CHECK SMM 02-05 | DATE | |
| PROJECT NUMBER SP-15-6(52)241 | | QUANT. JAH 02-05 | CHECK SMM 02-05 | BY | |

| NO. | DATE | DESIGN REV. BY | MAPS CORR. BY | PARCELS AFFECTED | REQUEST BY | REMARKS |
|---|---|---|---|---|---|---|
| | | ORIGINAL SUBMISSION FOR AUTHORIZATION | | | | |
| | DATE | REVISIONS | | | | |

UTAH COUNTY

SHEET NO. RD-20

SEE SHEET RD20
MATCH LINE STATION 168+00.000

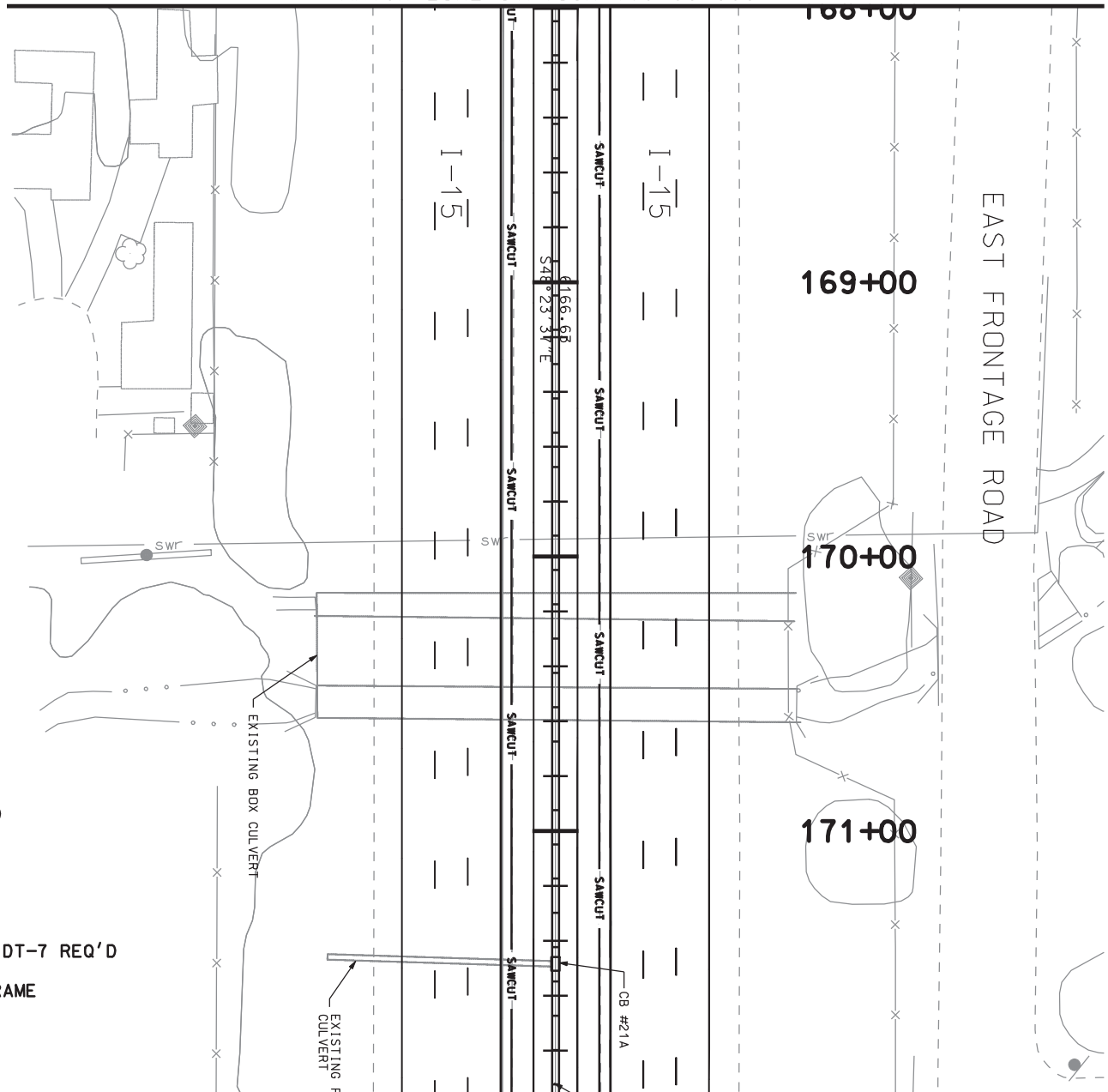


**REMOVE CATCH BASIN REQ'D**
STA 171+49, CL

**CATCH BASIN NO. 21A**
**CATCH BASIN, DETAIL DWG DT-7 REQ'D**
**(SEE SHEET DT-7)**
**RECTANGULAR GRATE AND FRAME**
**(STANDARD GRATING)**
**STD DWG GF3 REQ'D (2).**
STA 171+49, CL
TOB ELEV = 4543.40
EXIST ELEV = 4539.80

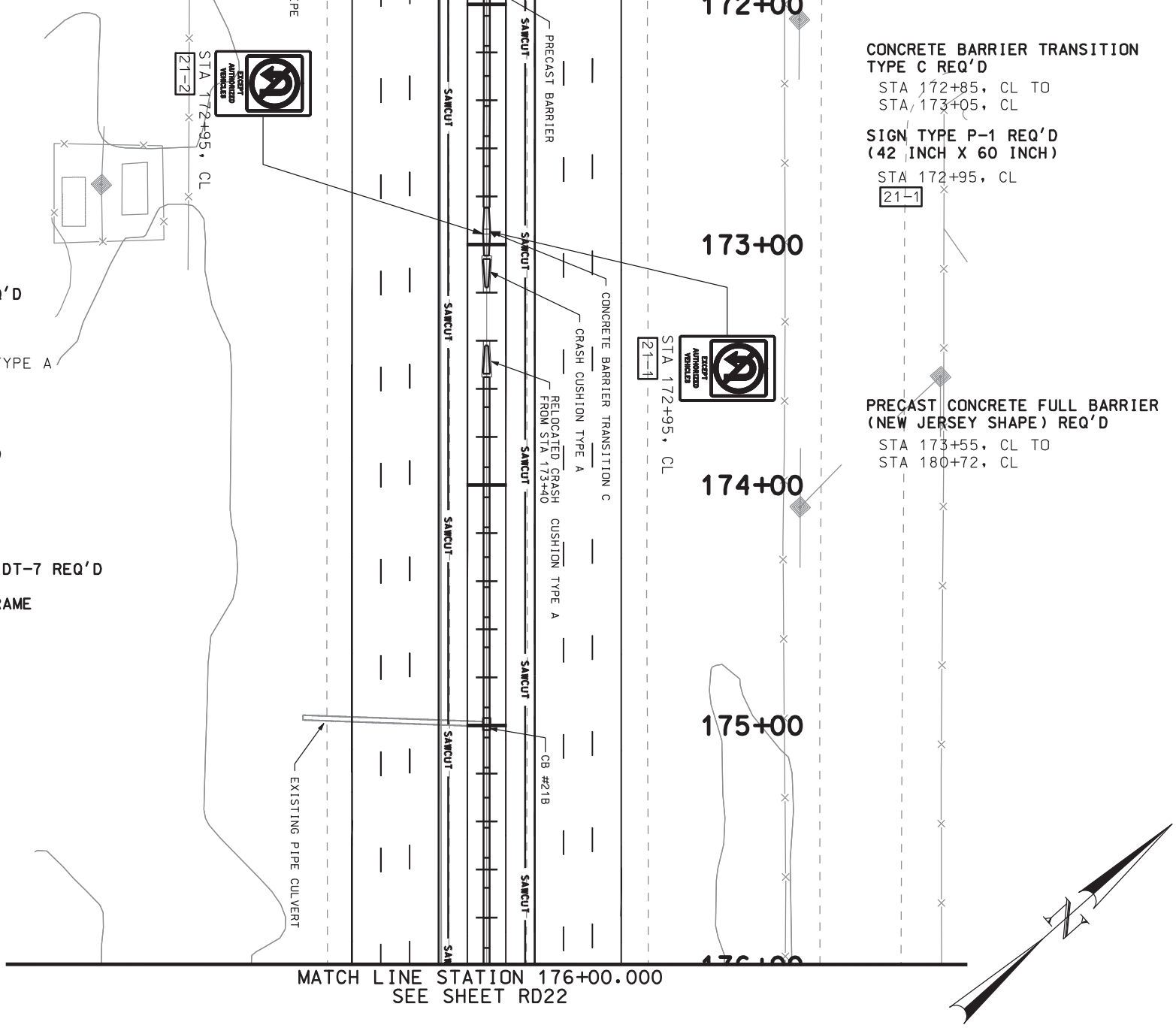


| | | | |
|---|---|---|---|
| I-15; CORRIDOR | UTAH DEPARTMENT OF TRANSPORTATION | | |
| IN UTAH COUNTY | REGION THREE -- OREM CITY, UTAH | | |
| PLAN SHEET | ROADWAY DESIGN | | |
| PROJECT NUMBER SP-15-6(52)241 | APPROVAL RECOMM. DATE / PROJECT DESIGN ENGINEER | DESIGN JAH 02-05 | CHECK SMM 02-05 |
| | APPROVED FOR USE BY UDOT DATE / PRECONSTRUCTION ENGINEER | DRAWN JAH 02-05 | CHECK SMM 02-05 |
| | | QUANT. JAH 02-05 | CHECK SMM 02-05 |

REVIEW
DATE
BY

| NO. | DATE | DESIGN REV. BY | MAPS CORR. BY | PARCELS AFFECTED | REQUEST BY | REMARKS |
|---|---|---|---|---|---|---|
| | | ORIGINAL SUBMISSION FOR AUTHORIZATION | | | | |

DATE REVISIONS

UTAH COUNTY

SHEET NO. RD-21

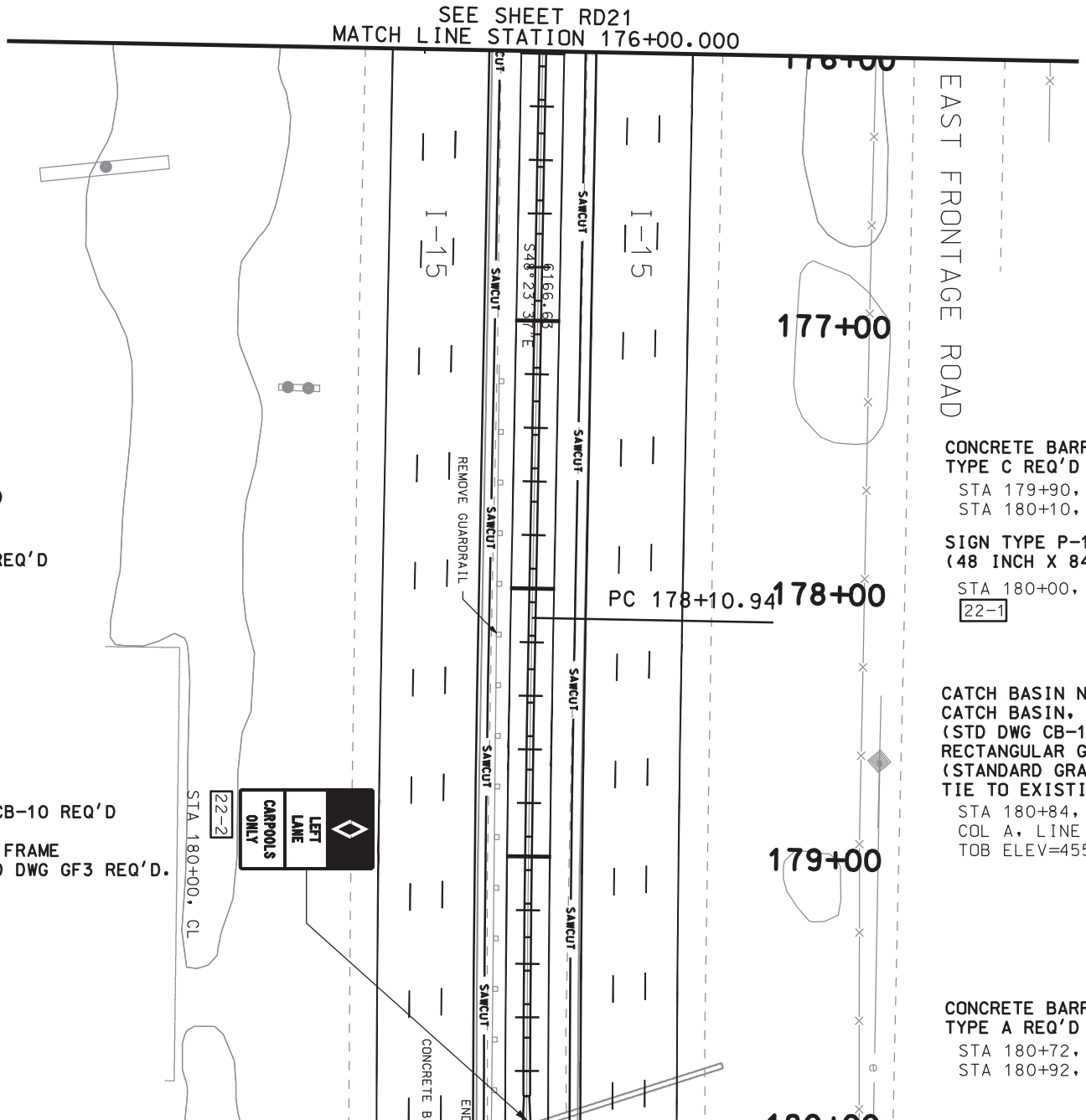


REMOVE GUARDRAIL REQ'D
STA 177+10, RT TO
STA 180+85, RT

REMOVE CRASH CUSHION REQ'D
STA 177+10, RT

SIGN TYPE P-1 REQ'D
(48 INCH X 84 INCH)
STA 180+00, CL
22-2

CATCH BASIN NO. 22A
CATCH BASIN, STD DWG CB-10 REQ'D
(STD DWG CB-10)
RECTANGULAR GRATE AND FRAME
(STANDARD GRATING) STD DWG GF3 REQ'D.
STA 180+84, 3.5 RT
COL A, LINE 1
TOB ELEV=4554.51

CONCRETE BARRIER TRANSITION
TYPE C REQ'D
STA 179+90, CL TO
STA 180+10, CL

SIGN TYPE P-1 REQ'D
(48 INCH X 84 INCH)
STA 180+00, CL
22-1

CATCH BASIN NO. 22B
CATCH BASIN, STD DWG CB-10 REQ'D
(STD DWG CB-10)
RECTANGULAR GRATE AND FRAME
(STANDARD GRATING) STD DWG GF3 REQ'D.
TIE TO EXISTING PIPE CULVERT
STA 180+84, 3.5 LT
COL A, LINE 1
TOB ELEV=4554.87

CONCRETE BARRIER TRANSITION
TYPE A REQ'D
STA 180+72, CL TO
STA 180+92, CL

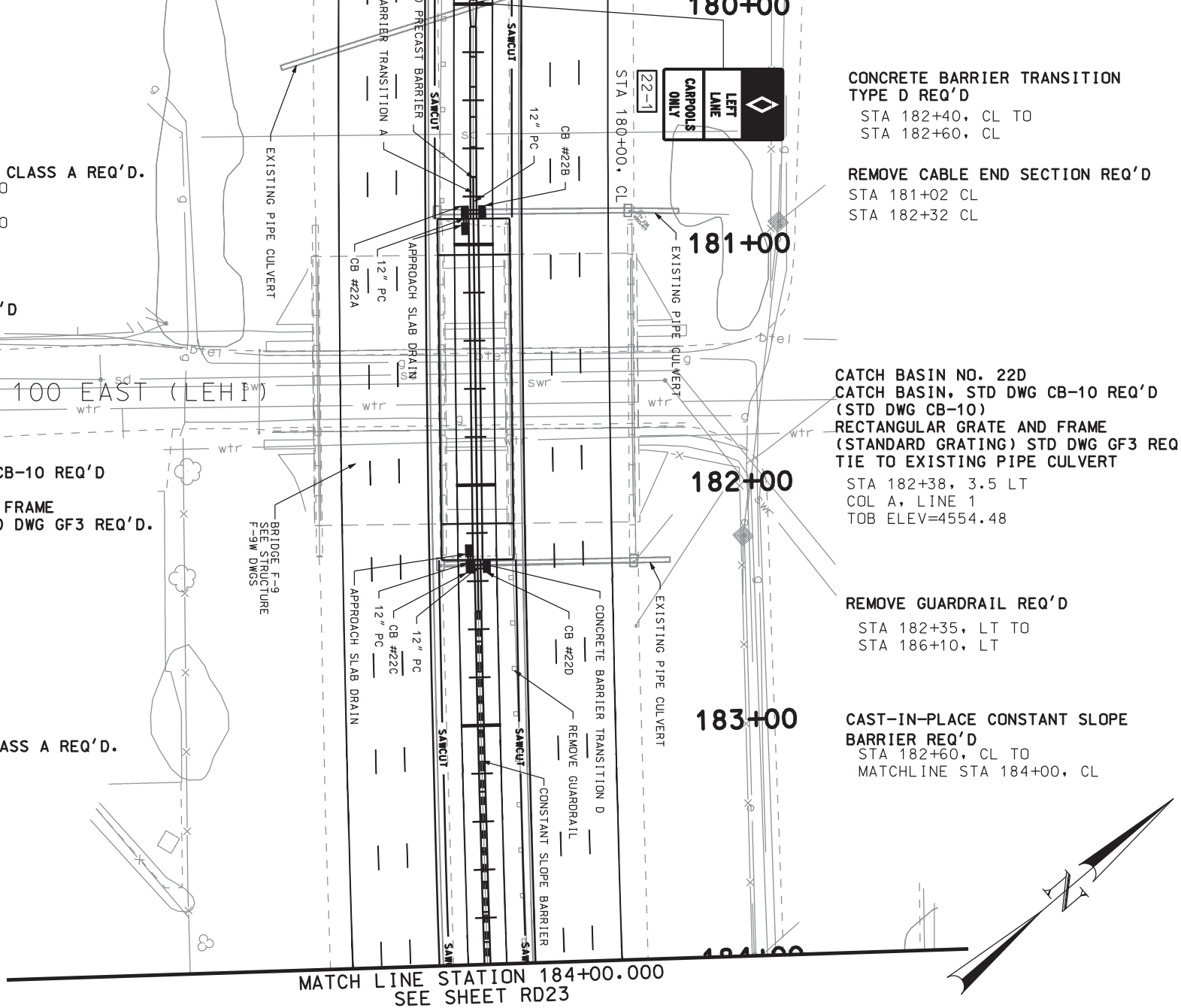


| | | | |
|---|---|---|---|
| SHEET NO. RD-22 | UTAH COUNTY | I-15; CORRIDOR IN UTAH COUNTY | UTAH DEPARTMENT OF TRANSPORTATION |
| | | PLAN SHEET | REGION THREE -- OREM CITY, UTAH |
| | | PROJECT NUMBER SP-15-6(52)241 | ROADWAY DESIGN |

APPROVAL RECOMM. DATE PROJECT DESIGN ENGINEER

APPROVED FOR USE BY UDOT DATE PRECONSTRUCTION ENGINEER

| | | | |
|---|---|---|---|
| DESIGN JAH 02-05 | CHECK SMM 02-05 | REVIEW | |
| DRAWN JAH 02-05 | CHECK SMM 02-05 | DATE | |
| QUANT. JAH 02-05 | CHECK SMM 02-05 | BY | |

| NO. | DATE | DESIGN REV. BY | MAPS CORR. BY | PARCELS AFFECTED | REQUEST BY | REMARKS |
|---|---|---|---|---|---|---|
| | | ORIGINAL SUBMISSION FOR AUTHORIZATION | | | | |

DATE REVISIONS

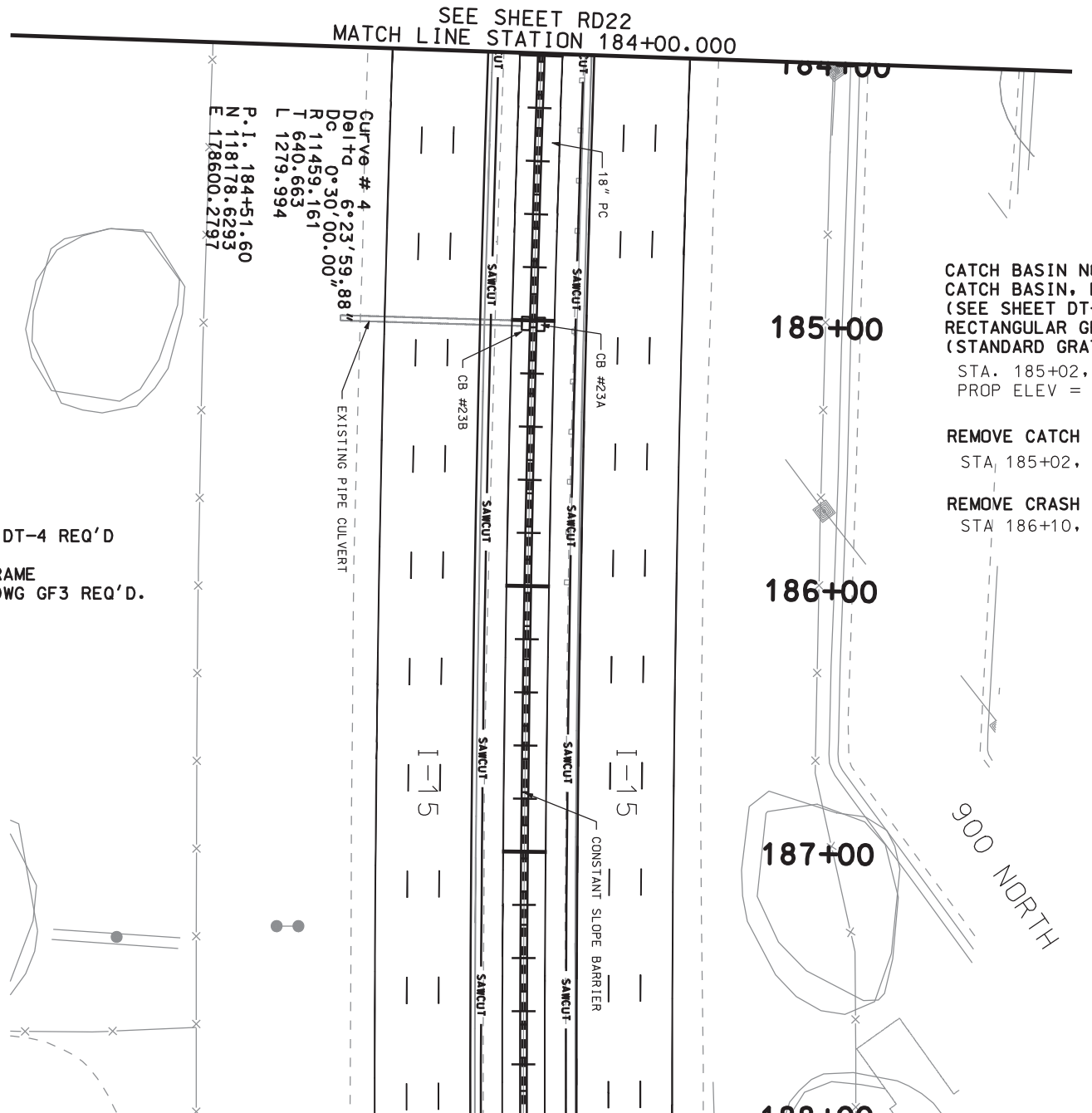


CATCH BASIN NO. 23A
CATCH BASIN, DETAIL DWG DT-4 REQ'D
(SEE SHEET DT-4)
RECTANGULAR GRATE AND FRAME
(STANDARD GRATING) STD DWG GF3 REQ'D.
STA. 185+02, 3.5 LT
PROP ELEV = 4551.21

REMOVE CATCH BASIN REQ'D
STA 185+02, CL

REMOVE CRASH CUSHION REQ'D
STA 186+10, LT

CATCH BASIN NO. 23B
CATCH BASIN, DETAIL DWG DT-4 REQ'D
(SEE SHEET DT-4)
RECTANGULAR GRATE AND FRAME
(STANDARD GRATING) STD DWG GF3 REQ'D.
STA. 185+02, 3.5 RT
TOB ELEV = 4551.21

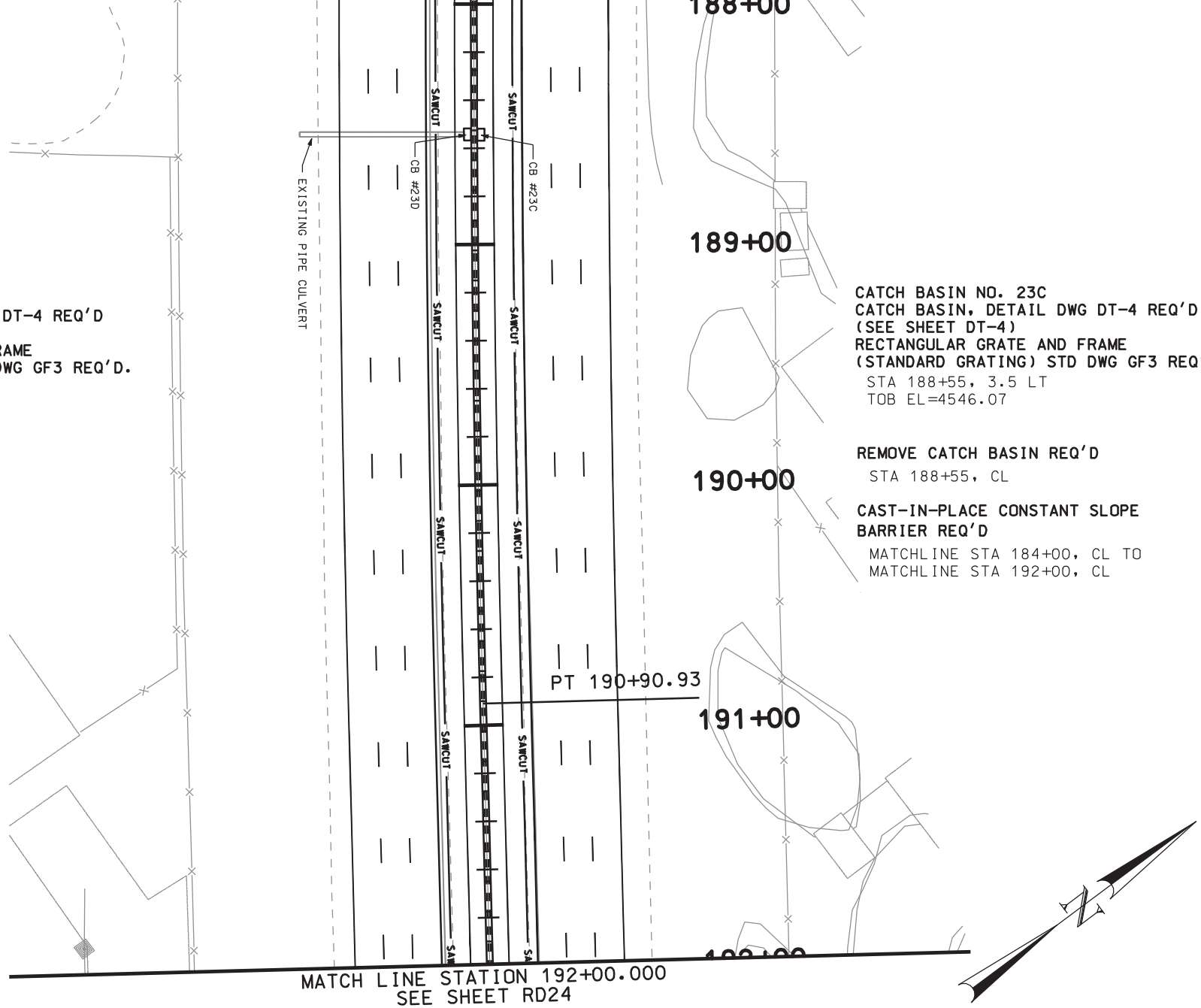


| | | | | | | |
|---|---|---|---|---|---|---|
| SHEET NO. RD-23 | UTAH COUNTY | I-15; CORRIDOR IN UTAH COUNTY | UTAH DEPARTMENT OF TRANSPORTATION<br>REGION THREE -- OREM CITY, UTAH<br>ROADWAY DESIGN | | | |
| | | PLAN SHEET | APPROVAL RECOMM. ____ DATE ____ PROJECT DESIGN ENGINEER | DESIGN JAH 02-05 | CHECK SMM 02-05 | REVIEW |
| | | PROJECT NUMBER SP-15-6(52)241 | APPROVED FOR USE BY UDOT ____ DATE ____ PRECONSTRUCTION ENGINEER | DRAWN JAH 02-05 | CHECK SMM 02-05 | DATE ____ |
| | | | | QUANT. JAH 02-05 | CHECK SMM 02-05 | BY ____ |

| NO. | DATE | DESIGN REV. BY | MAPS CORR. BY | PARCELS AFFECTED | REQUEST BY | REMARKS |
|---|---|---|---|---|---|---|
| | | ORIGINAL SUBMISSION FOR AUTHORIZATION | | | | |
| | DATE | REVISIONS | | | | |

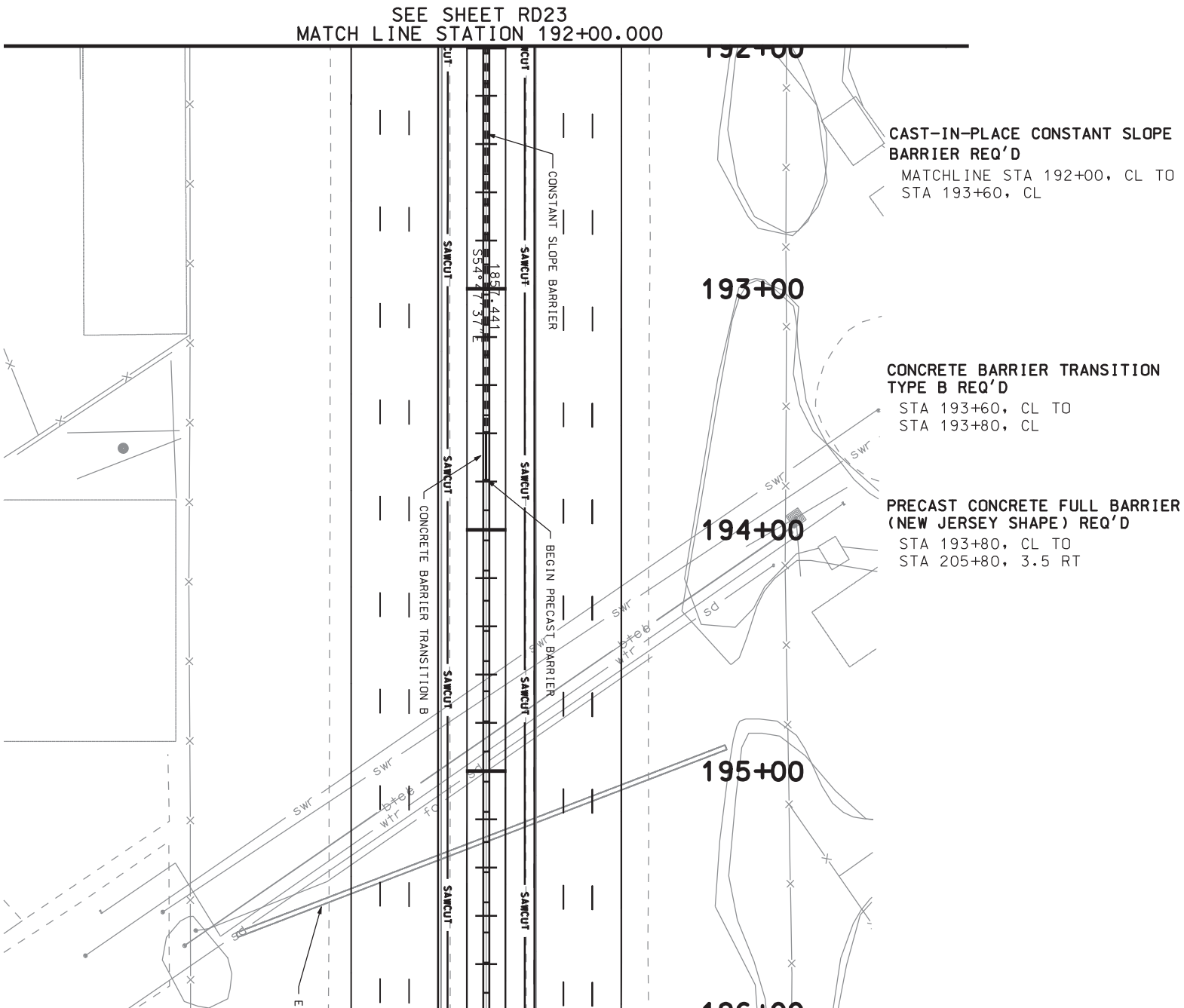
SEE SHEET RD23
MATCH LINE STATION 192+00.000
192+00
193+00
194+00
195+00
CAST-IN-PLACE CONSTANT SLOPE BARRIER REQ'D
MATCHLINE STA 192+00, CL TO STA 193+60, CL
CONCRETE BARRIER TRANSITION TYPE B REQ'D
STA 193+60, CL TO STA 193+80, CL
PRECAST CONCRETE FULL BARRIER (NEW JERSEY SHAPE) REQ'D
STA 193+80, CL TO STA 205+80, 3.5 RT
CONSTANT SLOPE BARRIER
BEGIN PRECAST BARRIER
CONCRETE BARRIER TRANSITION B
SAWCUT
S54°17'37"E
185.441
swr
wtr
ps

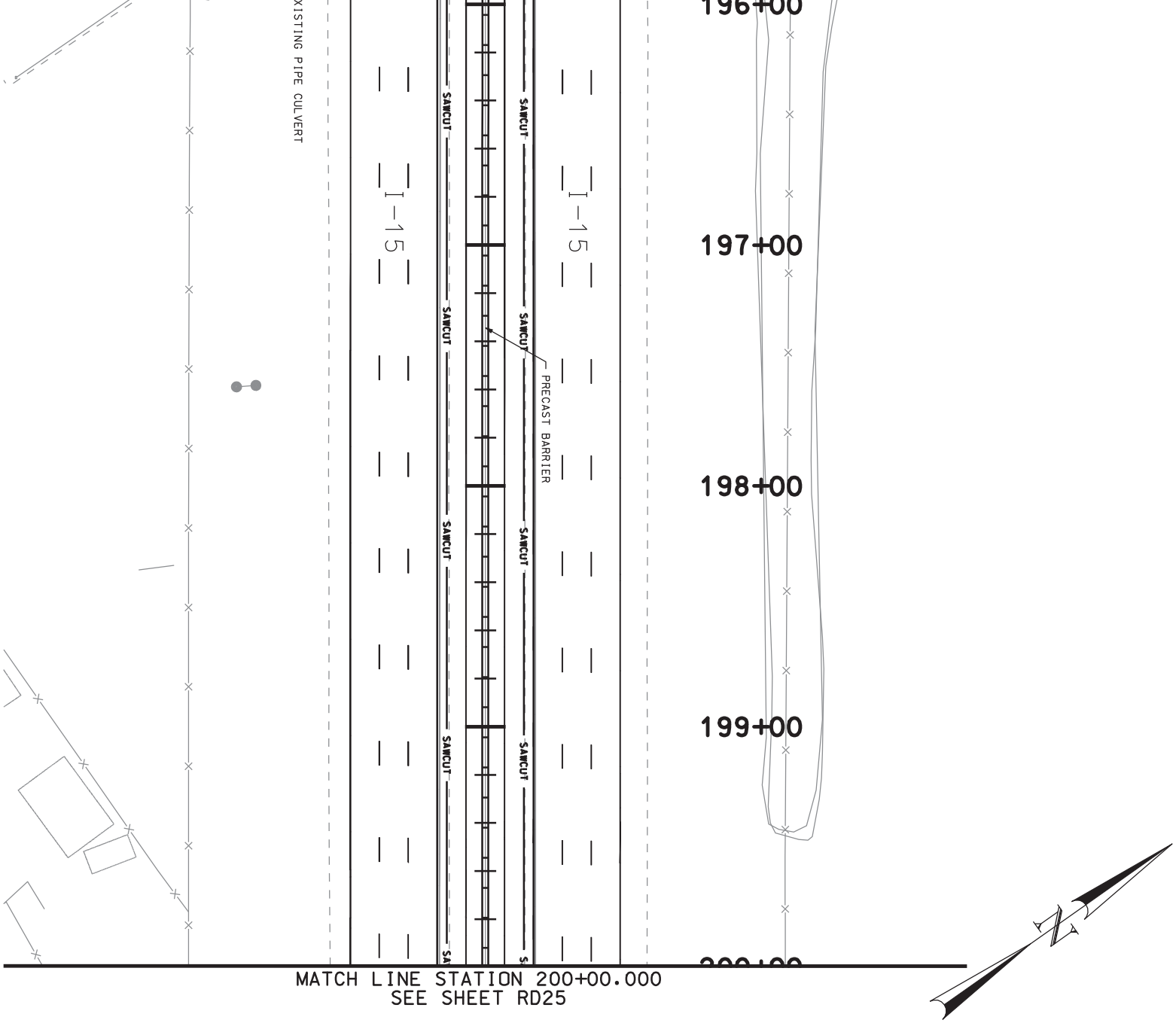


MATCH LINE STATION 200+00.000
SEE SHEET RD25

| | | | | | | |
|---|---|---|---|---|---|---|
| I-15; CORRIDOR | UTAH DEPARTMENT OF TRANSPORTATION | | | | | |
| IN UTAH COUNTY | REGION THREE -- OREM CITY, UTAH | | | | | |
| PLAN SHEET | ROADWAY DESIGN | | | | | |
| | APPROVAL RECOMM. ____ DATE ____ PROJECT DESIGN ENGINEER | DESIGN JAH 02-05 | CHECK SMM 02-05 | REVIEW | | |
| PROJECT NUMBER SP-15-6(52)241 | APPROVED FOR USE BY UDOT ____ DATE ____ PRECONSTRUCTION ENGINEER | DRAWN JAH 02-05 | CHECK SMM 02-05 | DATE ____ | | |
| | | QUANT. JAH 02-05 | CHECK SMM 02-05 | BY ____ | | |

| NO. | DATE | DESIGN REV. BY | MAPS CORR. BY | PARCELS AFFECTED | REQUEST BY | REMARKS |
|---|---|---|---|---|---|---|
| | | ORIGINAL SUBMISSION FOR AUTHORIZATION | | | | |
| DATE | | REVISIONS | | | | |

UTAH COUNTY

SHEET NO. RD-24

SEE SHEET RD24
MATCH LINE STATION 200+00.000

CATCH BASIN NO. 25A
CATCH BASIN, DETAIL DWG DT-7 REQ'D
(SEE SHEET DT-7)
RECTANGULAR GRATE AND FRAME
(STANDARD GRATING) STD DWG GF3 REQ'D (2).
STA 200+06, CL
TOB EL=4526.71
EXIST EL=4523.54

REMOVE CATCH BASIN REQ'D
STA 200+06, CL

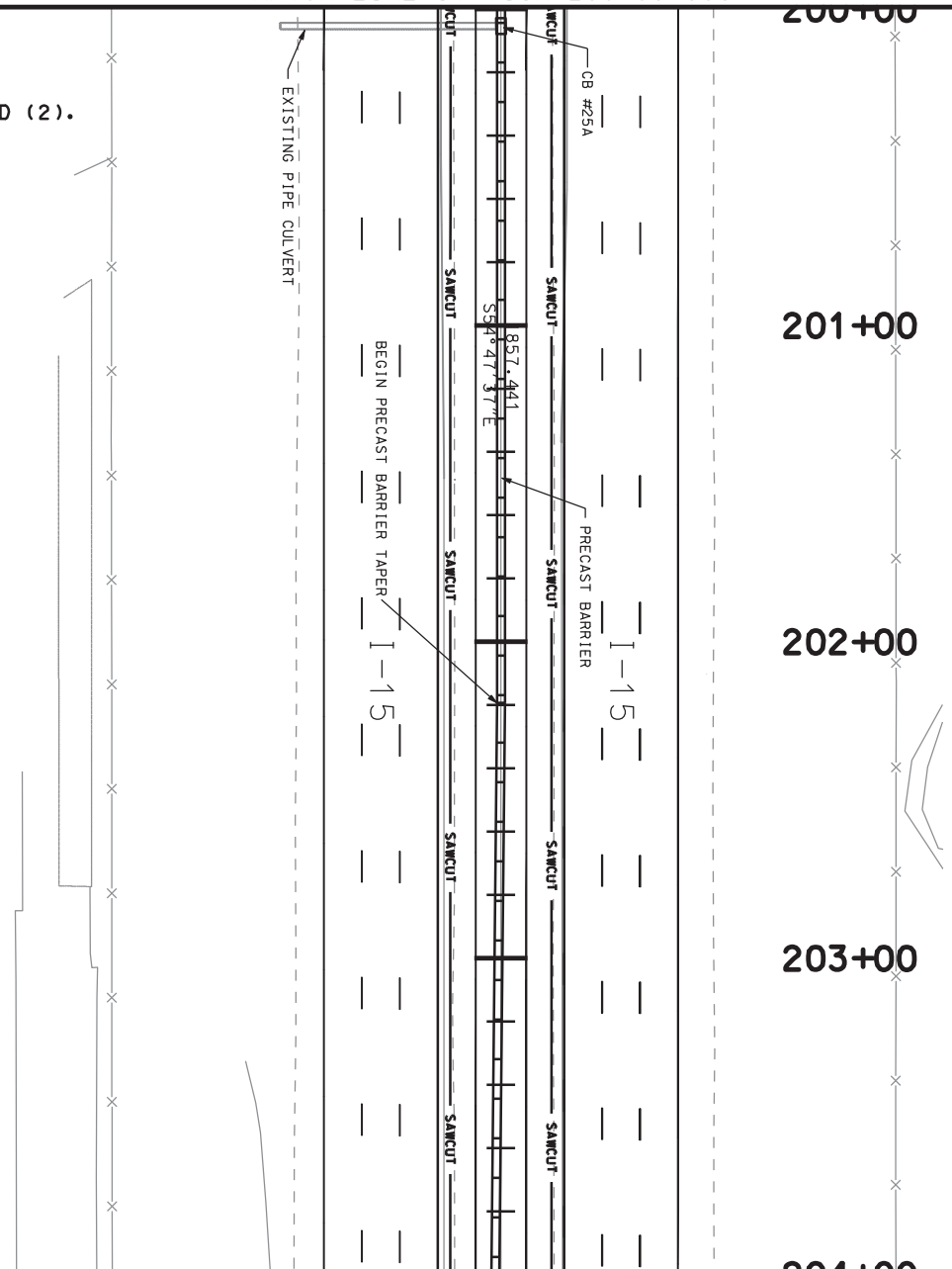


REMOVE PRECAST CONCRETE BARRIER REQ'D
STA 205+10, CL TO
STA 206+00, CL

REMOVE CRASH CUSHION REQ'D
(SAND BARREL ARRAY)
STA 205+12, CL
STA 206+00, CL

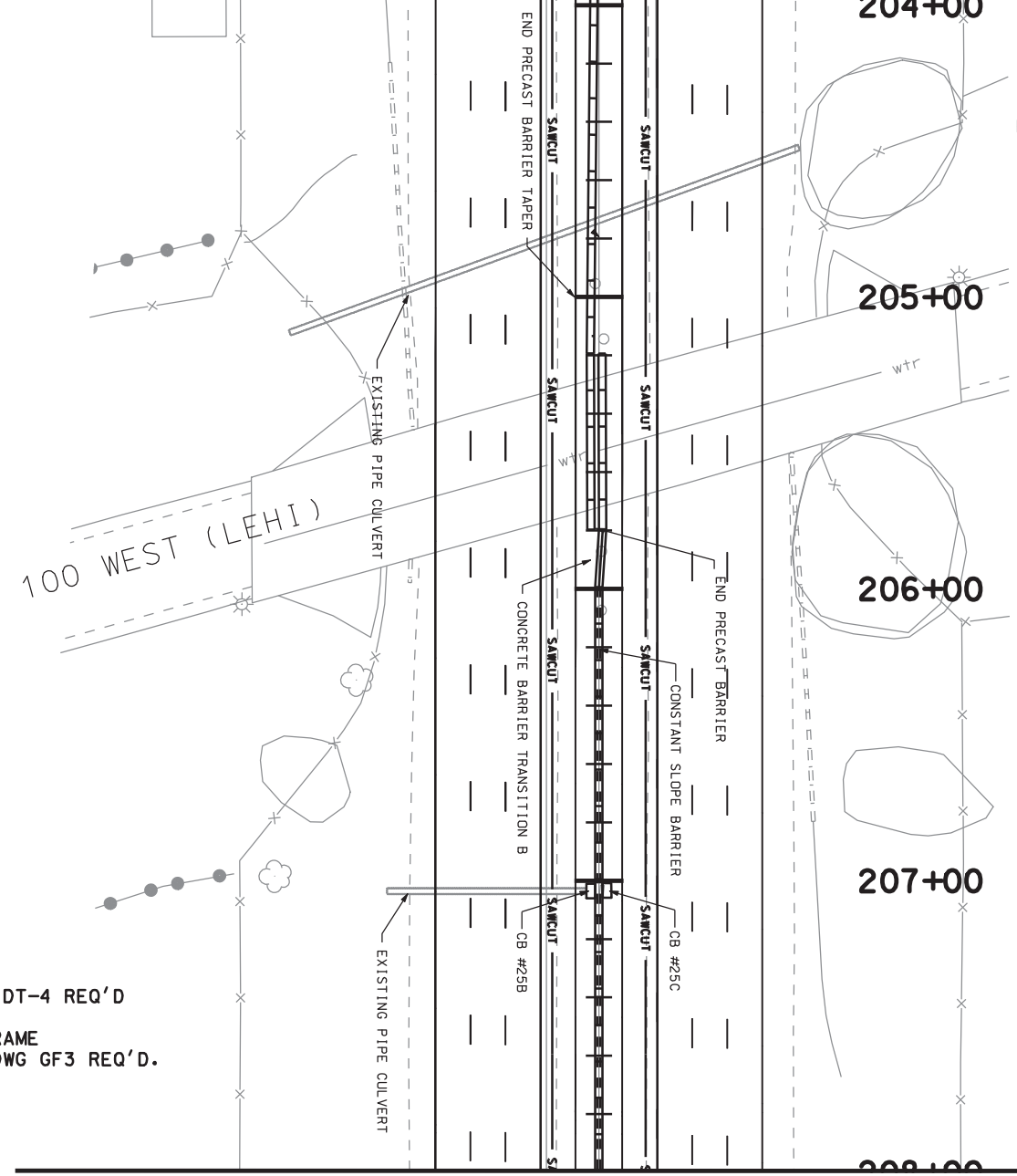


**PRECAST CONCRETE FULL BARRIER (NEW JERSEY SHAPE) REQ'D**
STA 205+20, 3.5 LT TO
STA 205+80, 3.5 LT

**CONCRETE BARRIER TRANSITION TYPE B REQ'D**
STA 205+80, 3.5 LT TO
STA 206+00, CL

**CAST-IN-PLACE CONSTANT SLOPE BARRIER REQ'D**
STA 206+00, CL TO
MATCHLINE STA 208+00, CL

**CATCH BASIN NO. 25C**
**CATCH BASIN, DETAIL DWG DT-4 REQ'D**
**(SEE SHEET DT-4)**
**RECTANGULAR GRATE AND FRAME**
**(STANDARD GRATING) STD DWG GF3 REQ'D.**
STA 207+04, 3.5 LT
TOB EL=4519.72

**REMOVE CATCH BASIN REQ'D**
STA 207+04, CL

**CATCH BASIN NO. 25B**
**CATCH BASIN, DETAIL DWG DT-4 REQ'D**
**(SEE SHEET DT-4)**
**RECTANGULAR GRATE AND FRAME**
**(STANDARD GRATING) STD DWG GF3 REQ'D.**
STA 207+04, 3.5 RT
TOB EL=4520.18

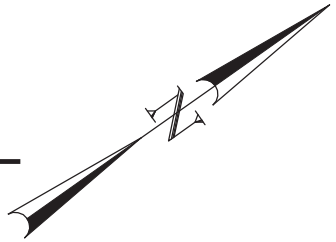

| | | | | | |
|---|---|---|---|---|---|
| SHEET NO. RD-25 | UTAH COUNTY | I-15; CORRIDOR IN UTAH COUNTY | UTAH DEPARTMENT OF TRANSPORTATION<br>REGION THREE -- OREM CITY, UTAH<br>ROADWAY DESIGN | | |
| | | PLAN SHEET | APPROVAL RECOMM. ____ DATE ____ PROJECT DESIGN ENGINEER | DESIGN JAH 02-05 | CHECK SMM 02-05 | REVIEW |
| | | PROJECT NUMBER SP-15-6(52)241 | APPROVED FOR USE BY UDOT ____ DATE ____ PRECONSTRUCTION ENGINEER | DRAWN JAH 02-05 | CHECK SMM 02-05 | DATE ____ |
| | | | | QUANT. JAH 02-05 | CHECK SMM 02-05 | BY ____ |

| NO. | DATE | DESIGN REV. BY | MAPS CORR. BY | PARCELS AFFECTED | REQUEST BY | REMARKS |
|---|---|---|---|---|---|---|
| | | ORIGINAL SUBMISSION FOR AUTHORIZATION | | | | |
| | DATE | REVISIONS | | | | |

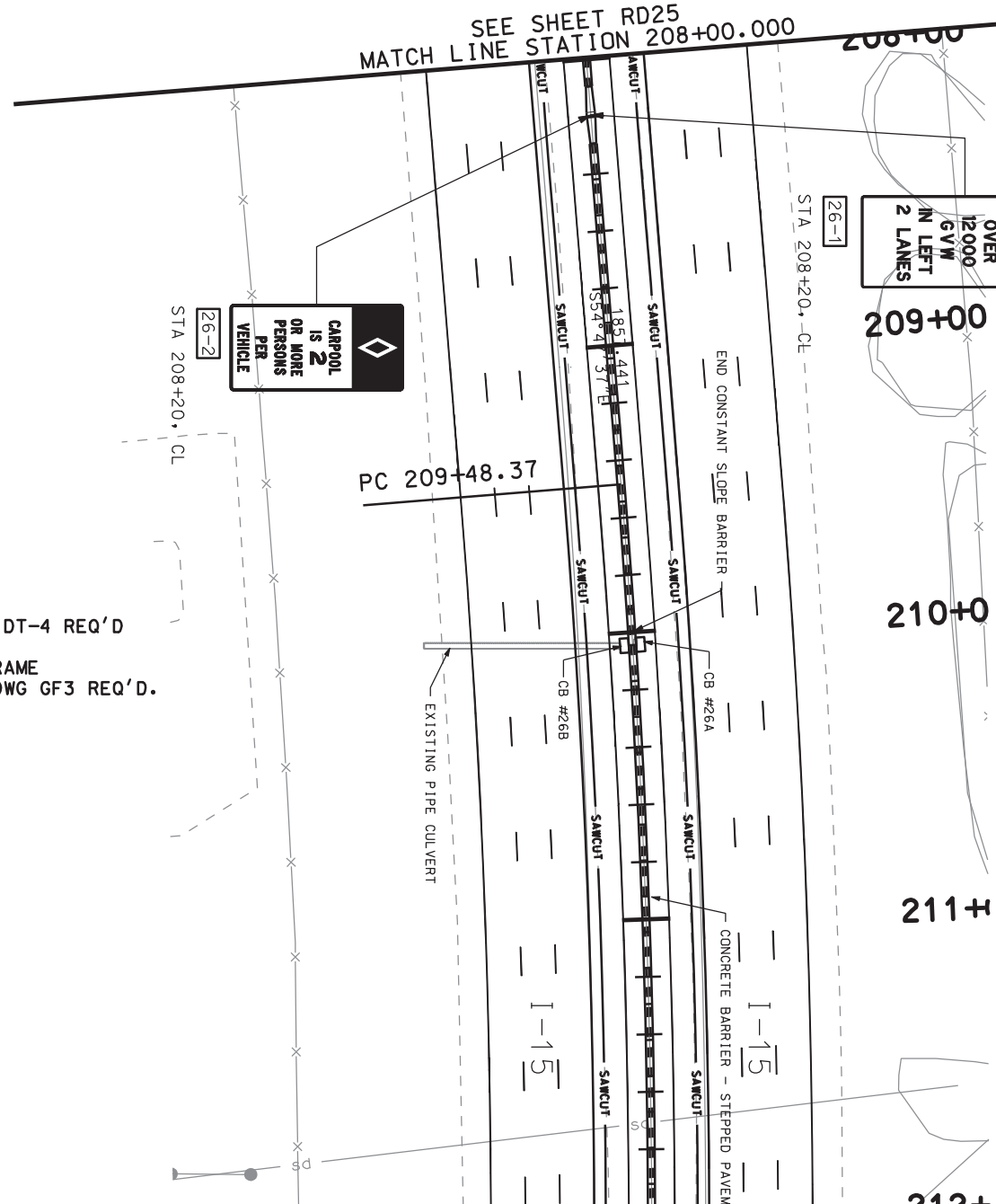
SEE SHEET RD25
MATCH LINE STATION 208+00.000
208+00
SIGN TYPE P-1 REQ'D
(48 INCH X 84 INCH)
STA 208+20, CL
26-1
NO VEHICLES OVER 12000 GVW IN LEFT 2 LANES
26-1
STA 208+20, CL
SIGN TYPE P-1 REQ'D
(48 INCH X 96 INCH)
STA 208+20, CL
26-2
CARPOOL IS 2 OR MORE PERSONS PER VEHICLE
26-2
STA 208+20, CL
209+00
CONCRETE BARRIER TRANSITION
TYPE C REQ'D
STA 208+10, CL TO
STA 208+30, CL
CAST-IN-PLACE CONSTANT SLOPE
BARRIER REQ'D
MATCHLINE STA 208+00, CL TO
STA 210+00, CL
CONCRETE BARRIER - STEPPED PAVEMENT
TYPE REQ'D
(SEE R-449 WALL A)
STA 210+00, CL TO
MATCHLINE STA 216+00, CL
210+0
CATCH BASIN NO. 26A
CATCH BASIN, DETAIL DWG DT-4 REQ'D
(SEE SHEET DT-4)
RECTANGULAR GRATE AND FRAME
(STANDARD GRATING) STD DWG GF3 REQ'D.
STA 210+05, 3.5 LT
TOB EL=4521.66
211+
REMOVE CATCH BASIN REQ'D
STA 210+05, CL
212+
CATCH BASIN NO. 26B
CATCH BASIN, DETAIL DWG DT-4 REQ'D
(SEE SHEET DT-4)
RECTANGULAR GRATE AND FRAME
(STANDARD GRATING) STD DWG GF3 REQ'D.
STA 210+05, 3.5 RT
TOB EL=4522.78
PC 209+48.37
S54°41'37"E
185.441
END CONSTANT SLOPE BARRIER
CB #26A
CB #26B
EXISTING PIPE CULVERT
CONCRETE BARRIER - STEPPED PAVEMENT
I-15
I-15
SAWCUT
sd

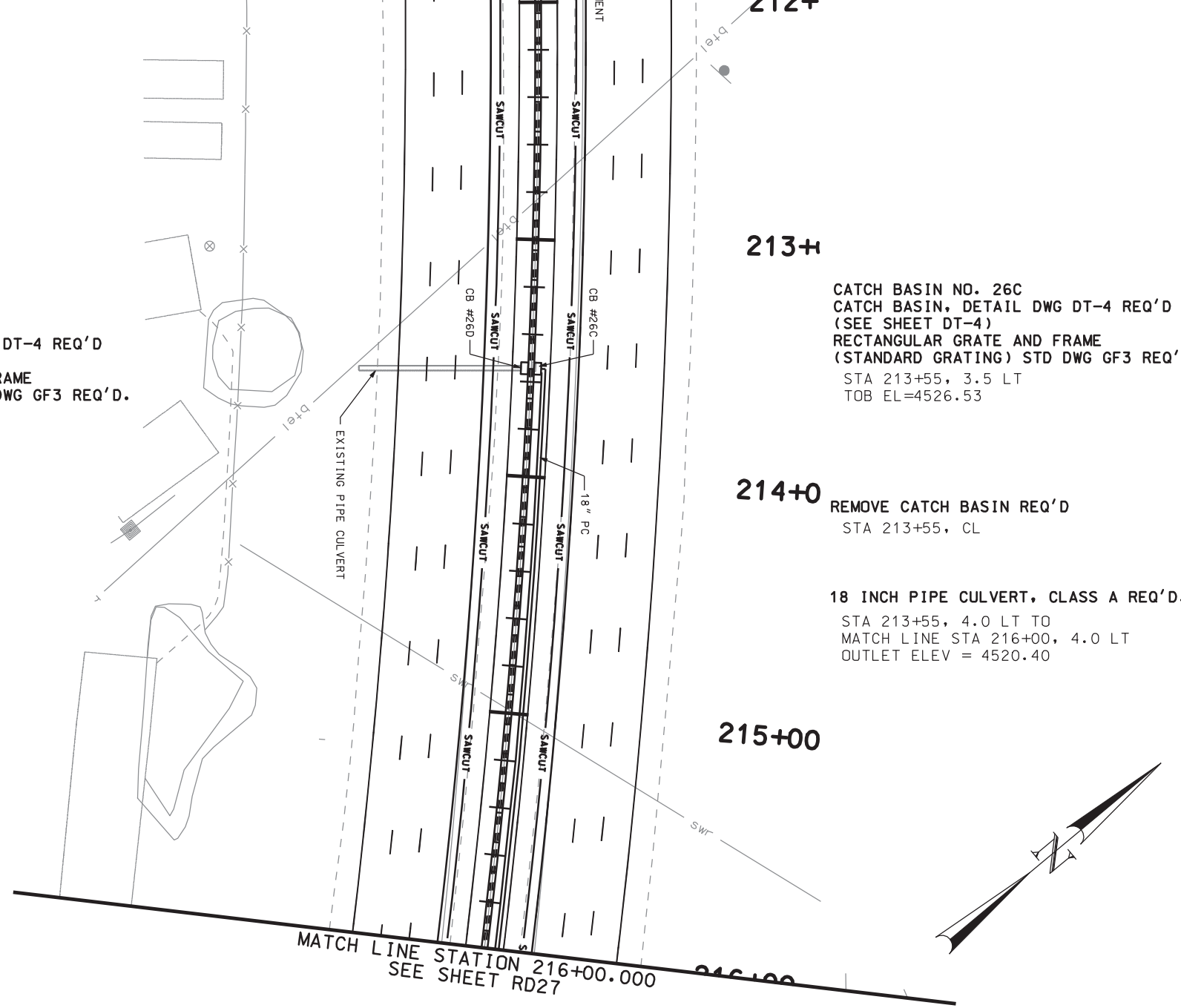


**CATCH BASIN NO. 26D**
**CATCH BASIN, DETAIL DWG DT-4 REQ'D**
**(SEE SHEET DT-4)**
**RECTANGULAR GRATE AND FRAME**
**(STANDARD GRATING) STD DWG GF3 REQ'D.**
STA 213+55, 3.5 RT
TOB EL=4527.79

**CATCH BASIN NO. 26C**
**CATCH BASIN, DETAIL DWG DT-4 REQ'D**
**(SEE SHEET DT-4)**
**RECTANGULAR GRATE AND FRAME**
**(STANDARD GRATING) STD DWG GF3 REQ'D.**
STA 213+55, 3.5 LT
TOB EL=4526.53

**REMOVE CATCH BASIN REQ'D**
STA 213+55, CL

**18 INCH PIPE CULVERT, CLASS A REQ'D.**
STA 213+55, 4.0 LT TO
MATCH LINE STA 216+00, 4.0 LT
OUTLET ELEV = 4520.40

SHEET NO. RD-26

UTAH COUNTY

I-15; CORRIDOR
IN UTAH COUNTY
PLAN SHEET

PROJECT NUMBER SP-15-6(52)241

UTAH DEPARTMENT OF TRANSPORTATION
REGION THREE -- OREM CITY, UTAH
ROADWAY DESIGN

APPROVAL RECOMM. DATE PROJECT DESIGN ENGINEER
APPROVED FOR USE BY UDOT DATE PRECONSTRUCTION ENGINEER

DESIGN JAH 02-05 CHECK SMM 02-05 REVIEW
DRAWN JAH 02-05 CHECK SMM 02-05 DATE
QUANT. JAH 02-05 CHECK SMM 02-05 BY

| NO. | DATE | DESIGN REV. BY | MAPS CORR. BY | PARCELS AFFECTED | REQUEST BY | REMARKS |
|---|---|---|---|---|---|---|
| | | ORIGINAL SUBMISSION FOR AUTHORIZATION | | | | |

DATE REVISIONS

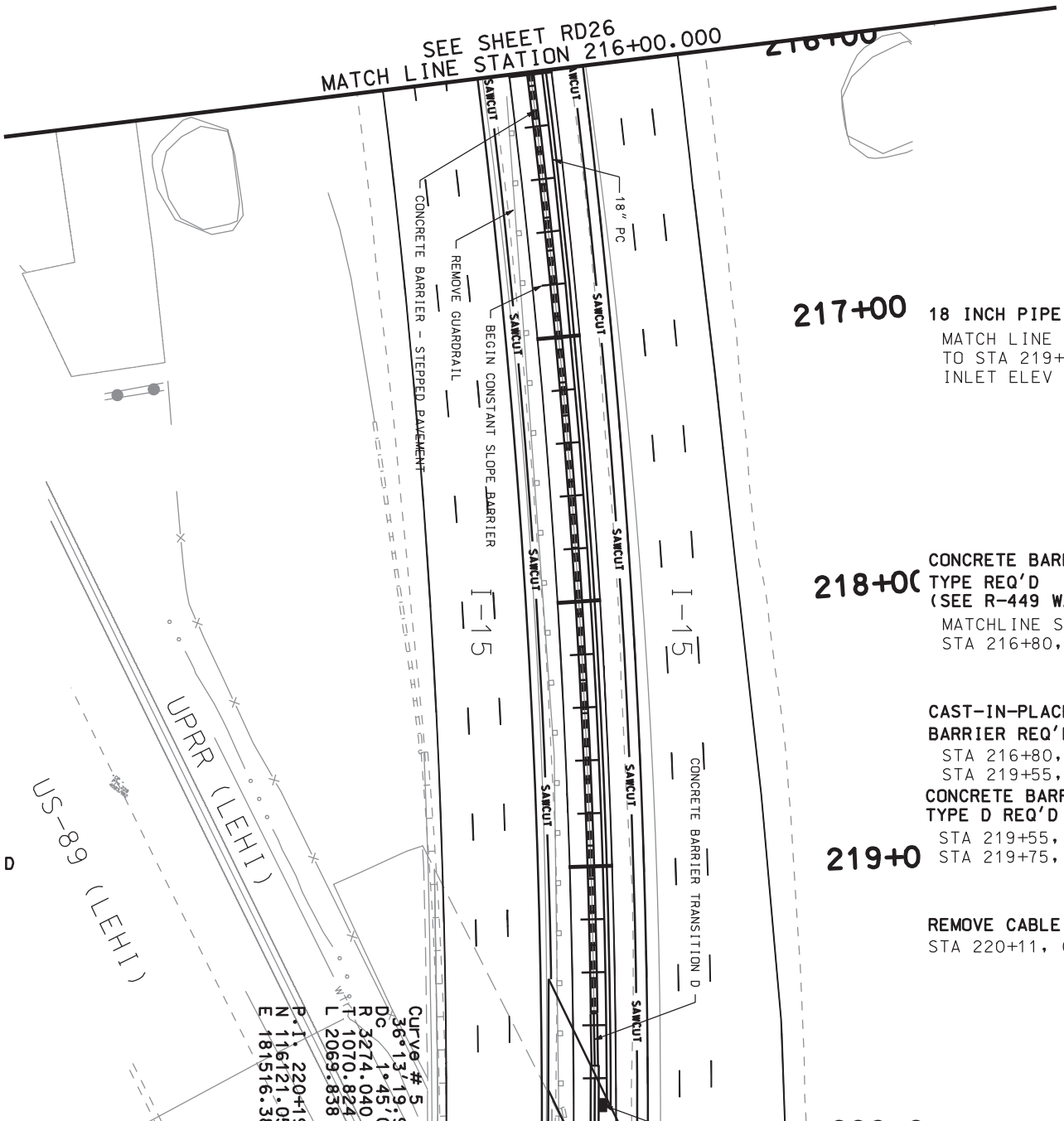


**217+00** **18 INCH PIPE CULVERT, CLASS A REQ'D**
MATCH LINE STA. 216+00, 3.5 LT
TO STA 219+90, 4.0 LT
INLET ELEV = 4532.60

**218+00** **CONCRETE BARRIER - STEPPED PAVEMENT TYPE REQ'D (SEE R-449 WALL A)**
MATCHLINE STA 216+00, CL TO
STA 216+80, CL

**CAST-IN-PLACE CONSTANT SLOPE BARRIER REQ'D**
STA 216+80, CL TO
STA 219+55, CL

**CONCRETE BARRIER TRANSITION TYPE D REQ'D**
**219+0** STA 219+55, CL TO
STA 219+75, CL

**REMOVE CABLE END SECTION REQ'D**
STA 220+11, CL

**REMOVE CRASH CUSHION REQ'D**
STA 216+20, RT

**REMOVE GUARDRAIL REQ'D**
STA 216+20, RT TO
STA 219+95, RT

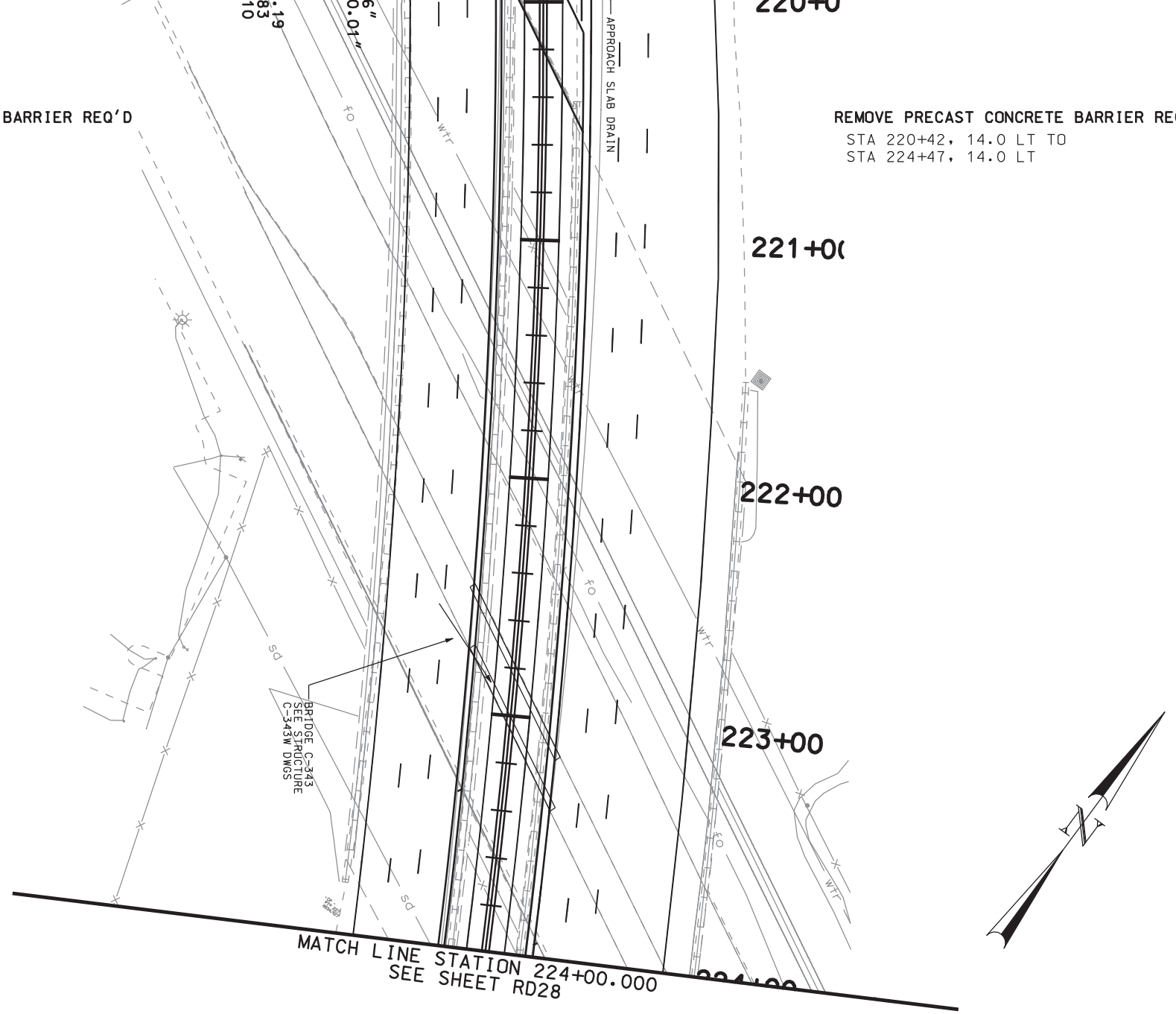


| | | | | | | |
|---|---|---|---|---|---|---|
| I-15; CORRIDOR | UTAH DEPARTMENT OF TRANSPORTATION | | | | | |
| IN UTAH COUNTY | REGION THREE -- OREM CITY, UTAH | | | | | |
| PLAN SHEET | ROADWAY DESIGN | | | | | |
| PROJECT NUMBER SP-15-6(52)241 | APPROVAL RECOMM. DATE / PROJECT DESIGN ENGINEER | DESIGN JAH 02-05 | CHECK SMM 02-05 | REVIEW | | |
| | APPROVED FOR USE BY UDOT DATE / PRECONSTRUCTION ENGINEER | DRAWN JAH 02-05 | CHECK SMM 02-05 | DATE | | |
| | | QUANT. JAH 02-05 | CHECK SMM 02-05 | BY | | |

| NO. | DATE | DESIGN REV. BY | MAPS CORR. BY | PARCELS AFFECTED | REQUEST BY | REMARKS |
|---|---|---|---|---|---|---|
| | | ORIGINAL SUBMISSION FOR AUTHORIZATION | | | | |
| | DATE | REVISIONS | | | | |

SHEET NO. RD-27

UTAH COUNTY

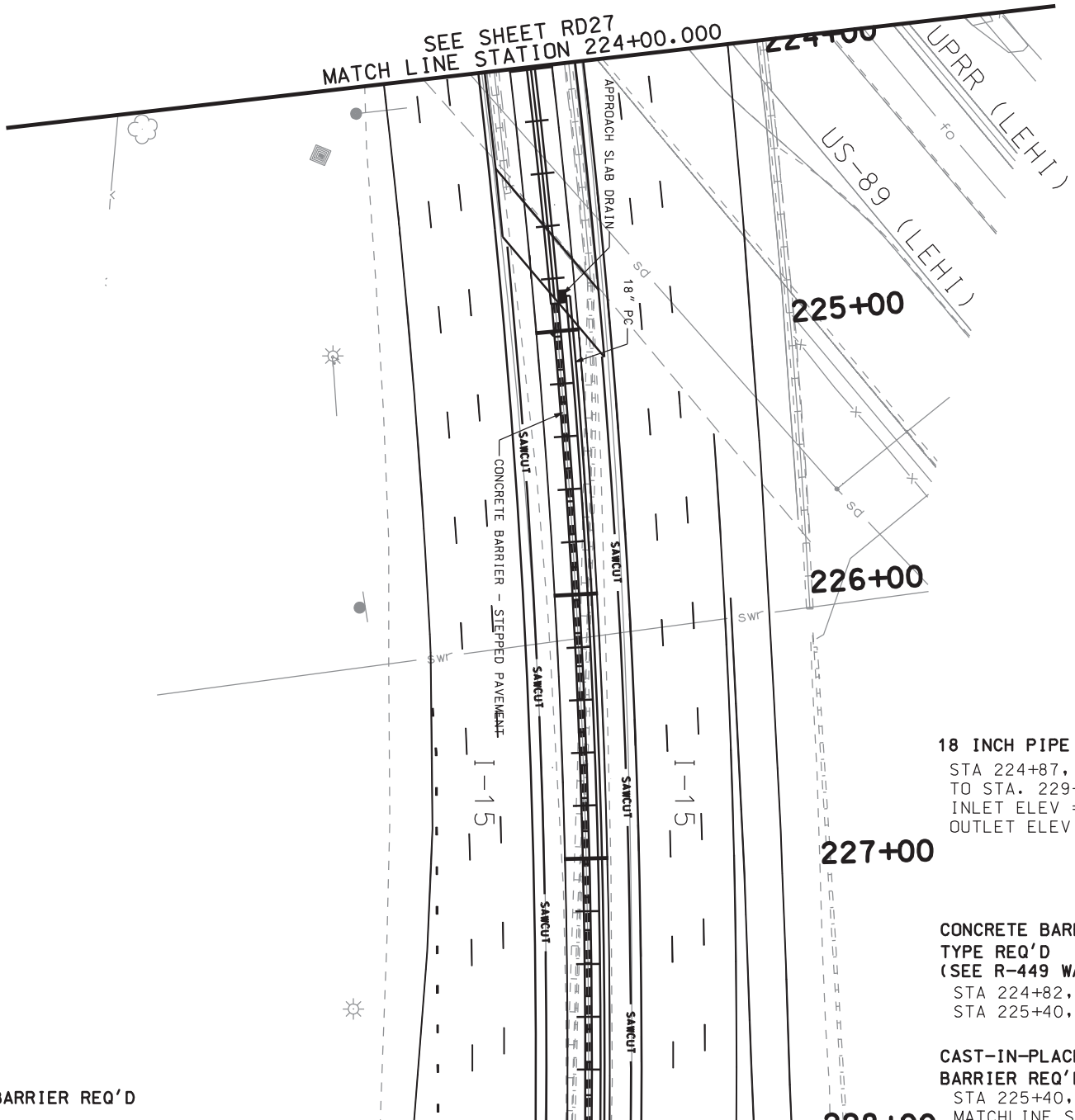


**18 INCH PIPE CULVERT, CLASS A REQ'D**
STA 224+87, 3.5 LT
TO STA. 229+04, 3.5 LT
INLET ELEV = 4532.98
OUTLET ELEV = 4522.78

**CONCRETE BARRIER - STEPPED PAVEMENT TYPE REQ'D**
**(SEE R-449 WALL B)**
STA 224+82, CL TO
STA 225+40, CL

**CAST-IN-PLACE CONSTANT SLOPE BARRIER REQ'D**
STA 225+40, CL TO
MATCHLINE STA 232+00, CL

**REMOVE PRECAST CONCRETE BARRIER REQ'D**
STA 224+83, 12.6 LT TO

STA 224+85, 12.6 LT 18
MATCHLINE STA 232+00, RT

228+00

MATCHLINE STA 232+00, CL

CATCH BASIN NO. 28A
CATCH BASIN, DETAIL DWG DT-4 REQ'D
(SEE SHEET DT-4)
RECTANGULAR GRATE AND FRAME
(STANDARD GRATING) STD DWG GF3 REQ'D.
STA 229+00, 3.5 RT
TOB EL=4531.36

229+00

CATCH BASIN NO. 28B
CATCH BASIN, DETAIL DWG DT-4 REQ'D
(SEE SHEET DT-4)
RECTANGULAR GRATE AND FRAME
(STANDARD GRATING) STD DWG GF3 REQ'D.
STA 229+04, 3.5 LT
TOB EL=4530.50

EXISTING PIPE CULVERT

CB #28A

CB #28B

SAWCUT

PT 230+18.21

230+00

REMOVE CATCH BASIN REQ'D
STA 229+04, CL

EXISTING CONCRETE BARRIER

231+00

MATCH LINE STATION 232+00.000
SEE SHEET RD29

| | | | | | | |
|---|---|---|---|---|---|---|
| SHEET NO. RD-28 | UTAH COUNTY | I-15; CORRIDOR IN UTAH COUNTY PLAN SHEET | UTAH DEPARTMENT OF TRANSPORTATION<br>REGION THREE -- OREM CITY, UTAH<br>ROADWAY DESIGN | | | |
| | | PROJECT NUMBER SP-15-6(52)241 | APPROVAL RECOMM. DATE PROJECT DESIGN ENGINEER | DESIGN JAH 02-05 | CHECK SMM 02-05 | REVIEW |
| | | | APPROVED FOR USE BY UDOT DATE PRECONSTRUCTION ENGINEER | DRAWN JAH 02-05 | CHECK SMM 02-05 | DATE |
| | | | | QUANT. JAH 02-05 | CHECK SMM 02-05 | BY |

| NO. | DATE | DESIGN REV. BY | MAPS CORR. BY | PARCELS AFFECTED | REQUEST BY | REMARKS |
|---|---|---|---|---|---|---|
| | | ORIGINAL SUBMISSION FOR AUTHORIZATION | | | | |
| DATE | | REVISIONS | | | | |

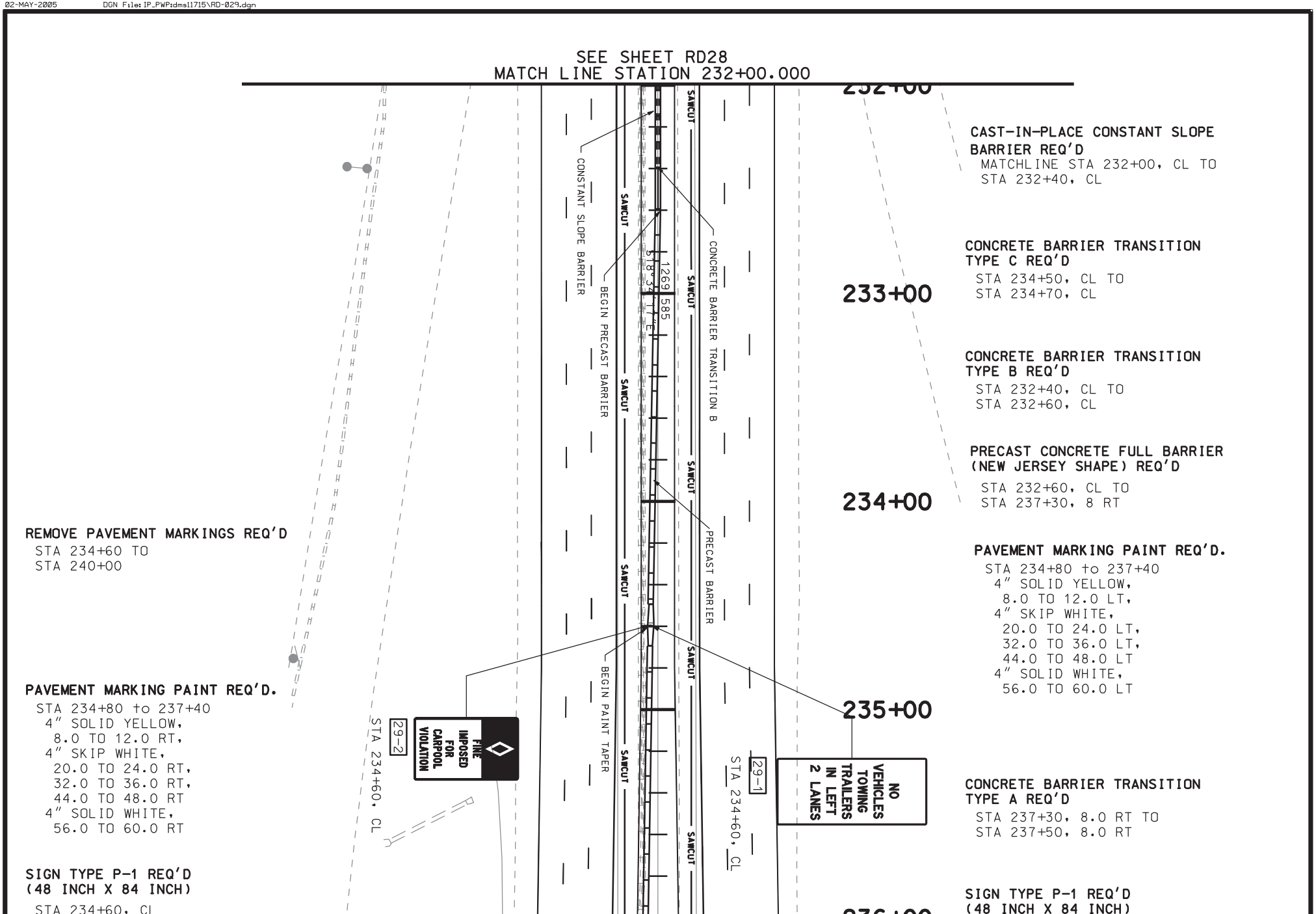
SEE SHEET RD28
MATCH LINE STATION 232+00.000
232+00
233+00
234+00
235+00
CAST-IN-PLACE CONSTANT SLOPE BARRIER REQ'D
MATCHLINE STA 232+00, CL TO STA 232+40, CL
CONCRETE BARRIER TRANSITION TYPE C REQ'D
STA 234+50, CL TO STA 234+70, CL
CONCRETE BARRIER TRANSITION TYPE B REQ'D
STA 232+40, CL TO STA 232+60, CL
PRECAST CONCRETE FULL BARRIER (NEW JERSEY SHAPE) REQ'D
STA 232+60, CL TO STA 237+30, 8 RT
PAVEMENT MARKING PAINT REQ'D.
STA 234+80 to 237+40
4" SOLID YELLOW,
8.0 TO 12.0 LT,
4" SKIP WHITE,
20.0 TO 24.0 LT,
32.0 TO 36.0 LT,
44.0 TO 48.0 LT
4" SOLID WHITE,
56.0 TO 60.0 LT
CONCRETE BARRIER TRANSITION TYPE A REQ'D
STA 237+30, 8.0 RT TO STA 237+50, 8.0 RT
SIGN TYPE P-1 REQ'D (48 INCH X 84 INCH)
STA 234+60, CL
REMOVE PAVEMENT MARKINGS REQ'D
STA 234+60 TO STA 240+00
PAVEMENT MARKING PAINT REQ'D.
STA 234+80 to 237+40
4" SOLID YELLOW,
8.0 TO 12.0 RT,
4" SKIP WHITE,
20.0 TO 24.0 RT,
32.0 TO 36.0 RT,
44.0 TO 48.0 RT
4" SOLID WHITE,
56.0 TO 60.0 RT
CONCRETE BARRIER TRANSITION B
PRECAST BARRIER
CONSTANT SLOPE BARRIER
BEGIN PRECAST BARRIER
BEGIN PAINT TAPER
SAWCUT
S18°34'17"E
1269
585
29-1
STA 234+60, CL
NO VEHICLES TOWING TRAILERS IN LEFT 2 LANES
29-2
STA 234+60, CL
FINE IMPOSED FOR CARPOOL VIOLATION

29-2

**REMOVE PRECAST CONCRETE BARRIER REQ'D**
MATCHLINE STA 232+00, RT
TO STA 237+43, 8.5 RT

**REMOVE CATCH BASIN REQ'D**
STA 237+05, CL

**CATCH BASIN NO. 29A**
**CATCH BASIN, DETAIL DWG DT-7 REQ'D**
**(SEE SHEET DT-7)**
**RECTANGULAR GRATE AND FRAME**
**(STANDARD GRATING)**
**STD DWG GF3 REQ'D (2).**
**TIE TO EXISTING PIPE CULVERT**
STA 237+05, CL
TOB EL=4521.50
EXIST EL=4519.98

**PAVEMENT MARKING PAINT REQ'D.**
STA 234+80 to 237+40
4" SOLID YELLOW,
12.0 RT,
4" SKIP WHITE,
24.0 RT,
36.0 RT,
48.0 RT
4" SOLID WHITE,
60.0 RT

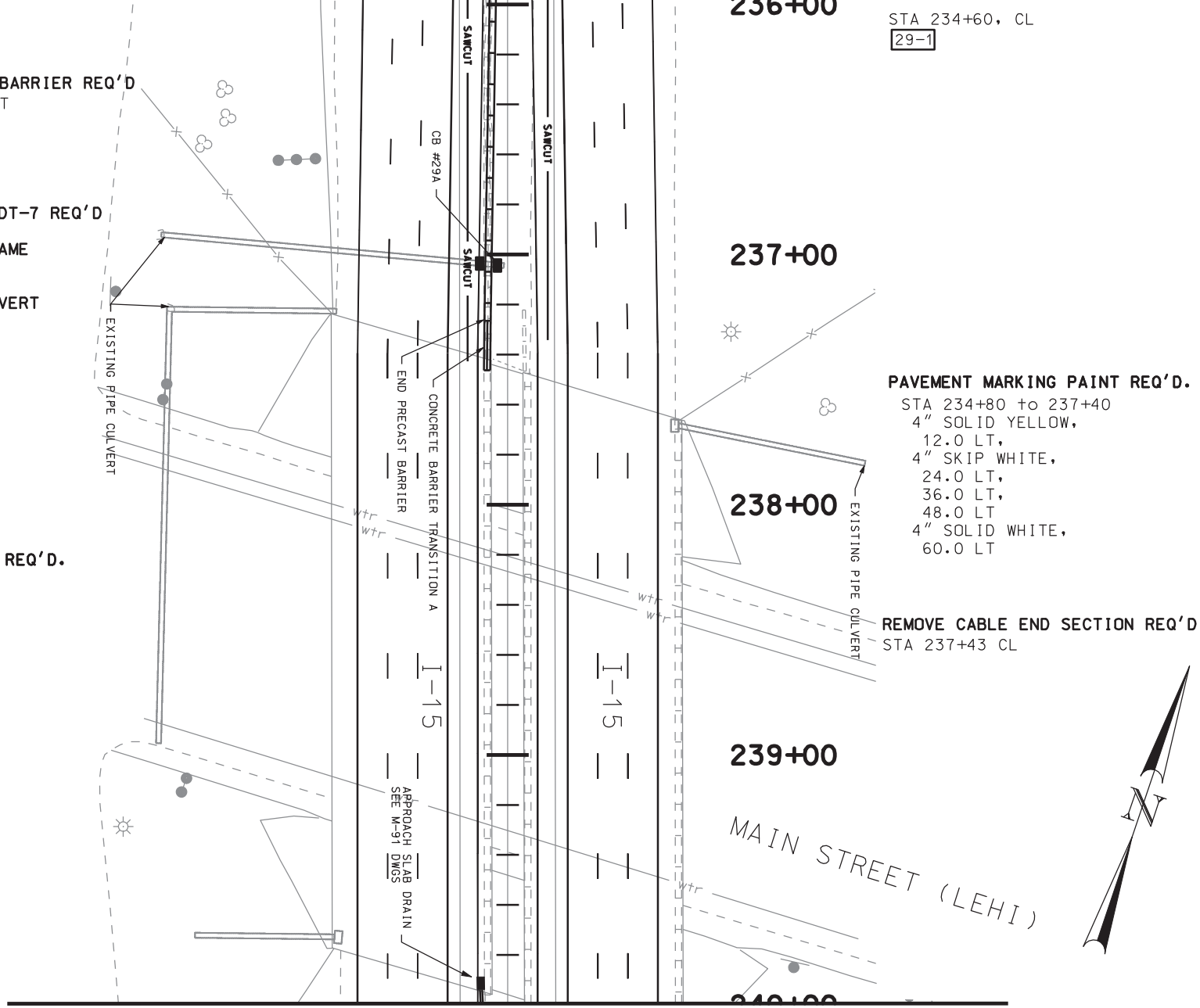


**PAVEMENT MARKING PAINT REQ'D.**
STA 234+80 to 237+40
4" SOLID YELLOW,
12.0 LT,
4" SKIP WHITE,
24.0 LT,
36.0 LT,
48.0 LT
4" SOLID WHITE,
60.0 LT

**REMOVE CABLE END SECTION REQ'D**
STA 237+43 CL

MATCH LINE STATION 240+00.000
SEE SHEET RD30

| | | | | | | |
|---|---|---|---|---|---|---|
| SHEET NO. RD-29 | UTAH COUNTY | I-15; CORRIDOR IN UTAH COUNTY PLAN SHEET | UTAH DEPARTMENT OF TRANSPORTATION<br>REGION THREE -- OREM CITY, UTAH<br>ROADWAY DESIGN | | | |
| | | PROJECT NUMBER SP-15-6(52)241 | APPROVAL RECOMM. DATE PROJECT DESIGN ENGINEER | DESIGN JAH 02-05 | CHECK SMM 02-05 | REVIEW |
| | | | APPROVED FOR USE BY UDOT DATE PRECONSTRUCTION ENGINEER | DRAWN JAH 02-05 | CHECK SMM 02-05 | DATE |
| | | | | QUANT. JAH 02-05 | CHECK SMM 02-05 | BY |

| NO. | DATE | DESIGN REV. BY | MAPS CORR. BY | PARCELS AFFECTED | REQUEST BY | REMARKS |
|---|---|---|---|---|---|---|
| | | ORIGINAL SUBMISSION FOR AUTHORIZATION | | | | |
| DATE | | REVISIONS | | | | |

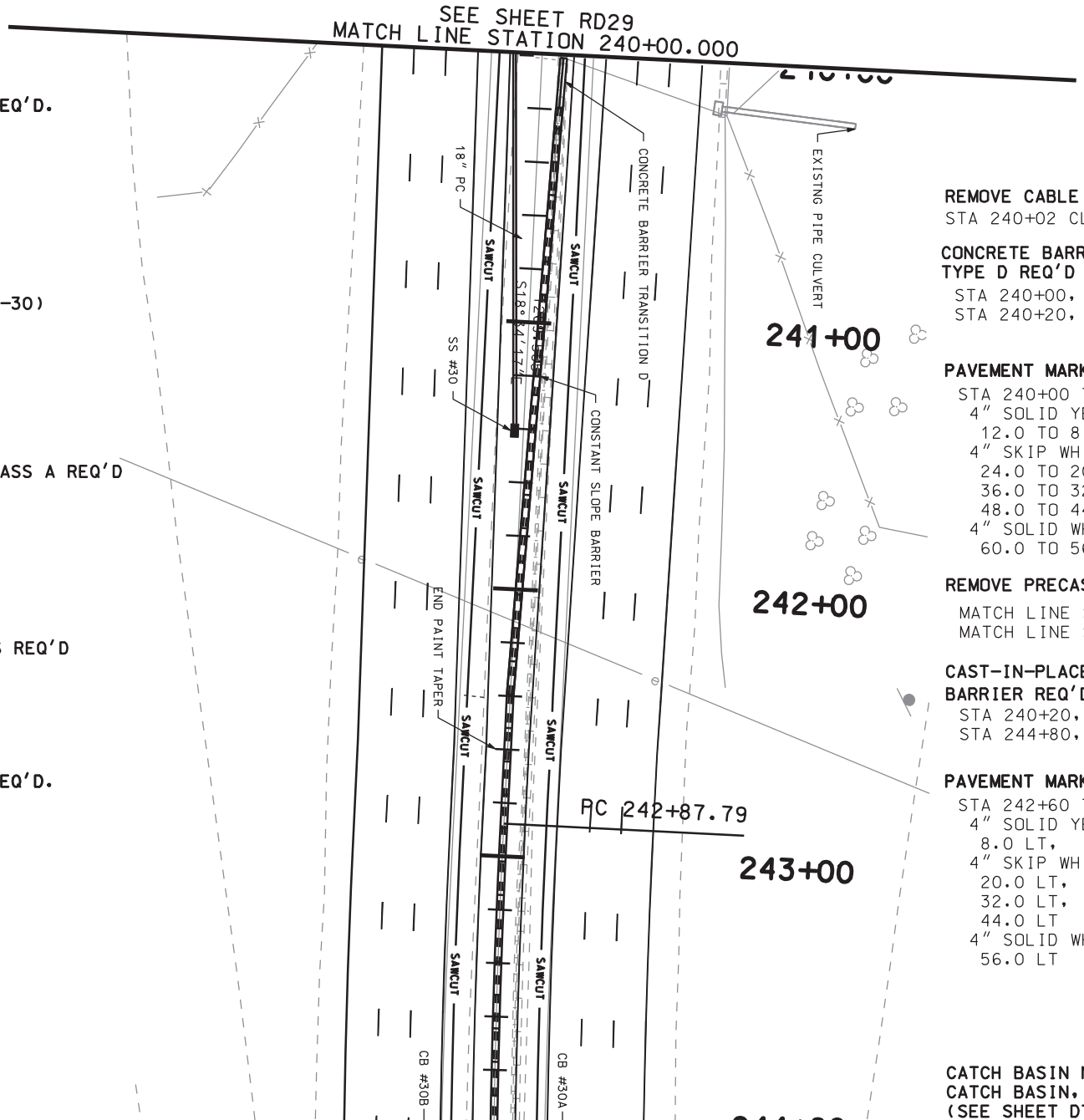


**PAVEMENT MARKING PAINT REQ'D.**
STA 240+00 TO 242+60
4" SOLID YELLOW,
12.0 TO 8.0 RT,
4" SKIP WHITE,
24.0 TO 20.0 RT,
36.0 TO 32.0 RT,
48.0 TO 44.0 RT
4" SOLID WHITE,
60.0 TO 56.0 RT

**STORM SUMP REQ'D (NO. SS-30)**
**MANHOLE FRAME AND GRATED**
**COVER STD GF1 REQ'D**
**(SEE SHEET DT-6)**
STA 241+40, 2.0 RT
TOB ELEV = 4512.67

**18 INCH PIPE CULVERT, CLASS A REQ'D**
STA 239+92, 3.5 RT TO
STA 241+40, 2.0 RT
INLET ELEV = 4515.68
OUTLET ELEV = 4509.67

**REMOVE PAVEMENT MARKINGS REQ'D**
STA 240+00 TO
STA 242+60

**PAVEMENT MARKING PAINT REQ'D.**
STA 242+60 TO 800+00
4" SOLID YELLOW,
8.0 RT,
4" SKIP WHITE,
20.0 RT,
32.0 RT,
44.0 RT
4" SOLID WHITE,
56.0 RT

**REMOVE CABLE END SECTION REQ'D**
STA 240+02 CL

**CONCRETE BARRIER TRANSITION**
**TYPE D REQ'D**
STA 240+00, CL TO
STA 240+20, CL

**PAVEMENT MARKING PAINT REQ'D.**
STA 240+00 TO 242+60
4" SOLID YELLOW,
12.0 TO 8.0 LT,
4" SKIP WHITE,
24.0 TO 20.0 LT,
36.0 TO 32.0 LT,
48.0 TO 44.0 LT
4" SOLID WHITE,
60.0 TO 56.0 LT

**REMOVE PRECAST CONCRETE BARRIER REQ'D**
MATCH LINE STA 240+00, 8 LT TO
MATCH LINE STA 248+00, 8 LT

**CAST-IN-PLACE CONSTANT SLOPE**
**BARRIER REQ'D**
STA 240+20, CL TO
STA 244+80, CL

**PAVEMENT MARKING PAINT REQ'D.**
STA 242+60 TO 800+00
4" SOLID YELLOW,
8.0 LT,
4" SKIP WHITE,
20.0 LT,
32.0 LT,
44.0 LT
4" SOLID WHITE,
56.0 LT

**CATCH BASIN NO. 30A**
**CATCH BASIN, DETAIL DWG DT-4 REQ'D**
**(SEE SHEET DT-4)**

CATCH BASIN NO. 30B
CATCH BASIN, DETAIL DWG DT-4 REQ'D
(SEE SHEET DT-4)
RECTANGULAR GRATE AND FRAME
(STANDARD GRATING) STD DWG GF3 REQ'D.
STA 244+05, 3.5 RT
TOB EL=4507.42

244+00

RECTANGULAR GRATE AND FRAME
(STANDARD GRATING) STD DWG GF3 REQ'D.
STA 244+05, 3.5 LT
TOB EL=4508.40

REMOVE CATCH BASIN REQ'D
STA 244+05 CL

245+00

CONCRETE BARRIER - STEPPED PAVEMENT
TYPE REQ'D
(SEE R-449 WALL C)
STA 244+80, CL TO
MATCH LINE STA 248+00, CL

246+00

CATCH BASIN NO. 30C
CATCH BASIN, DETAIL DWG DT-4 REQ'D
(SEE SHEET DT-4)
RECTANGULAR GRATE AND FRAME
(STANDARD GRATING) STD DWG GF3 REQ'D.
STA 247+56, 3.5 LT
PROP EL=4501.84

247+00

REMOVE CATCH BASIN REQ'D
STA 247+56, CL

CATCH BASIN NO. 30D
CATCH BASIN, DETAIL DWG DT-4 REQ'D
(SEE SHEET DT-4)
RECTANGULAR GRATE AND FRAME
(STANDARD GRATING) STD DWG GF3 REQ'D.
STA 247+56, 3.5 RT
TOB EL=4500.56

EXISTING PIPE CULVERT
EXISTING PIPE CULVERT
BEGIN CONCRETE BARRIER
I-15
I-15
SAWCUT
CB #30D
CB # 30C
SD
SD
MATCH LINE STATION 248+00.000
SEE SHEET RD31

| | | | | | | |
|---|---|---|---|---|---|---|
| SHEET NO. RD-30 | UTAH COUNTY | I-15; CORRIDOR IN UTAH COUNTY PLAN SHEET | UTAH DEPARTMENT OF TRANSPORTATION<br>REGION THREE -- OREM CITY, UTAH<br>ROADWAY DESIGN | | | |
| | | PROJECT NUMBER SP-15-6(52)241 | APPROVAL RECOMM. DATE PROJECT DESIGN ENGINEER | DESIGN JAH 02-05 | CHECK SMM 02-05 | REVIEW |
| | | | APPROVED FOR USE BY UDOT DATE PRECONSTRUCTION ENGINEER | DRAWN JAH 02-05 | CHECK SMM 02-05 | DATE |
| | | | | QUANT. JAH 02-05 | CHECK SMM 02-05 | BY |

| NO. | DATE | DESIGN REV.BY | MAPS CORR.BY | PARCELS AFFECTED | REQUEST BY | REMARKS |
|---|---|---|---|---|---|---|
| | | ORIGINAL SUBMISSION FOR AUTHORIZATION | | | | |
| DATE | | REVISIONS | | | | |

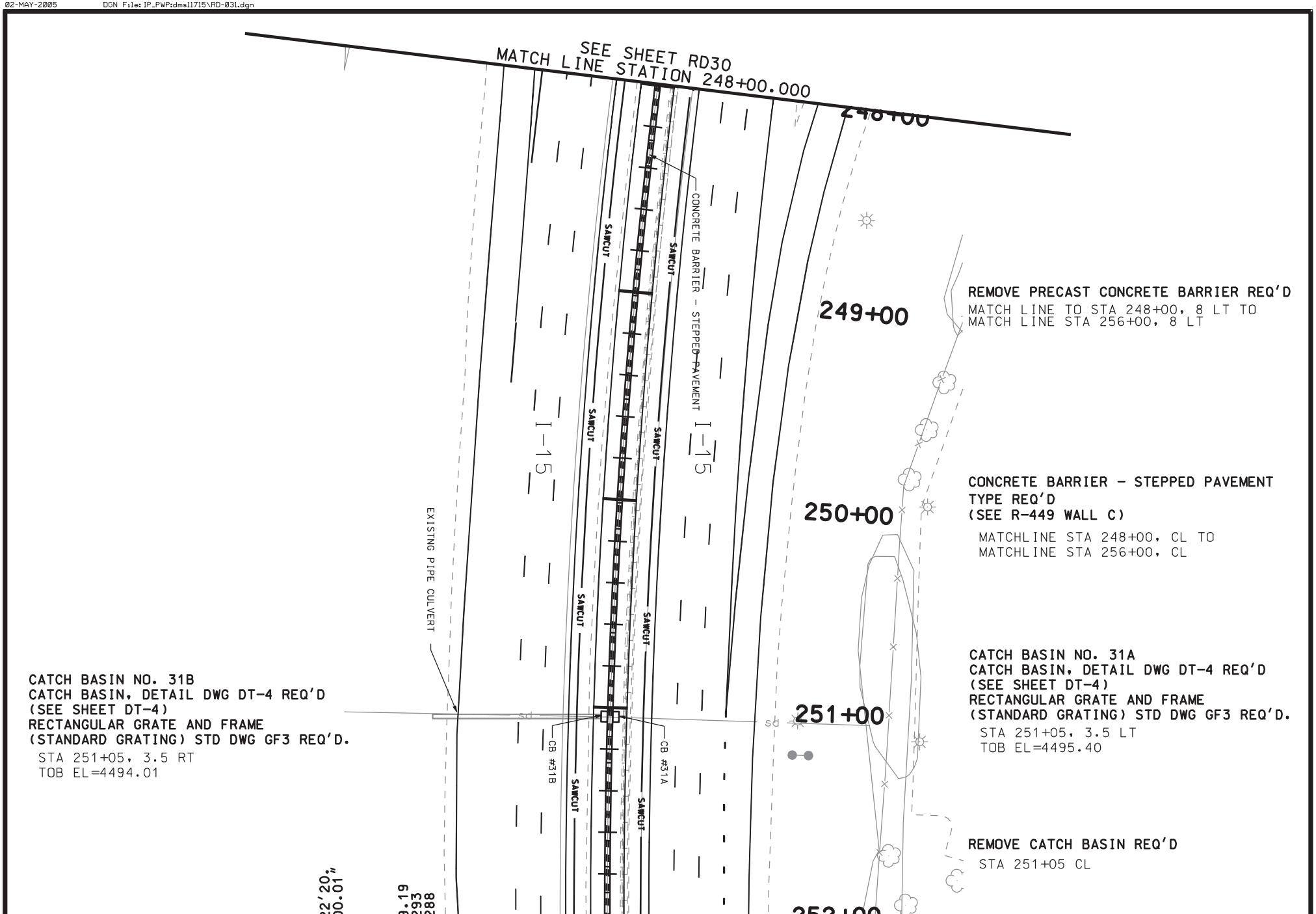
SEE SHEET RD30
MATCH LINE STATION 248+00.000
248+00
249+00
250+00
251+00
252+00
CONCRETE BARRIER - STEPPED PAVEMENT
SAWCUT
I-15
EXISTING PIPE CULVERT
CB #31B
CB #31A
sd
REMOVE PRECAST CONCRETE BARRIER REQ'D
MATCH LINE TO STA 248+00, 8 LT TO
MATCH LINE STA 256+00, 8 LT
CONCRETE BARRIER - STEPPED PAVEMENT
TYPE REQ'D
(SEE R-449 WALL C)
MATCHLINE STA 248+00, CL TO
MATCHLINE STA 256+00, CL
CATCH BASIN NO. 31A
CATCH BASIN, DETAIL DWG DT-4 REQ'D
(SEE SHEET DT-4)
RECTANGULAR GRATE AND FRAME
(STANDARD GRATING) STD DWG GF3 REQ'D.
STA 251+05, 3.5 LT
TOB EL=4495.40
REMOVE CATCH BASIN REQ'D
STA 251+05 CL
CATCH BASIN NO. 31B
CATCH BASIN, DETAIL DWG DT-4 REQ'D
(SEE SHEET DT-4)
RECTANGULAR GRATE AND FRAME
(STANDARD GRATING) STD DWG GF3 REQ'D.
STA 251+05, 3.5 RT
TOB EL=4494.01

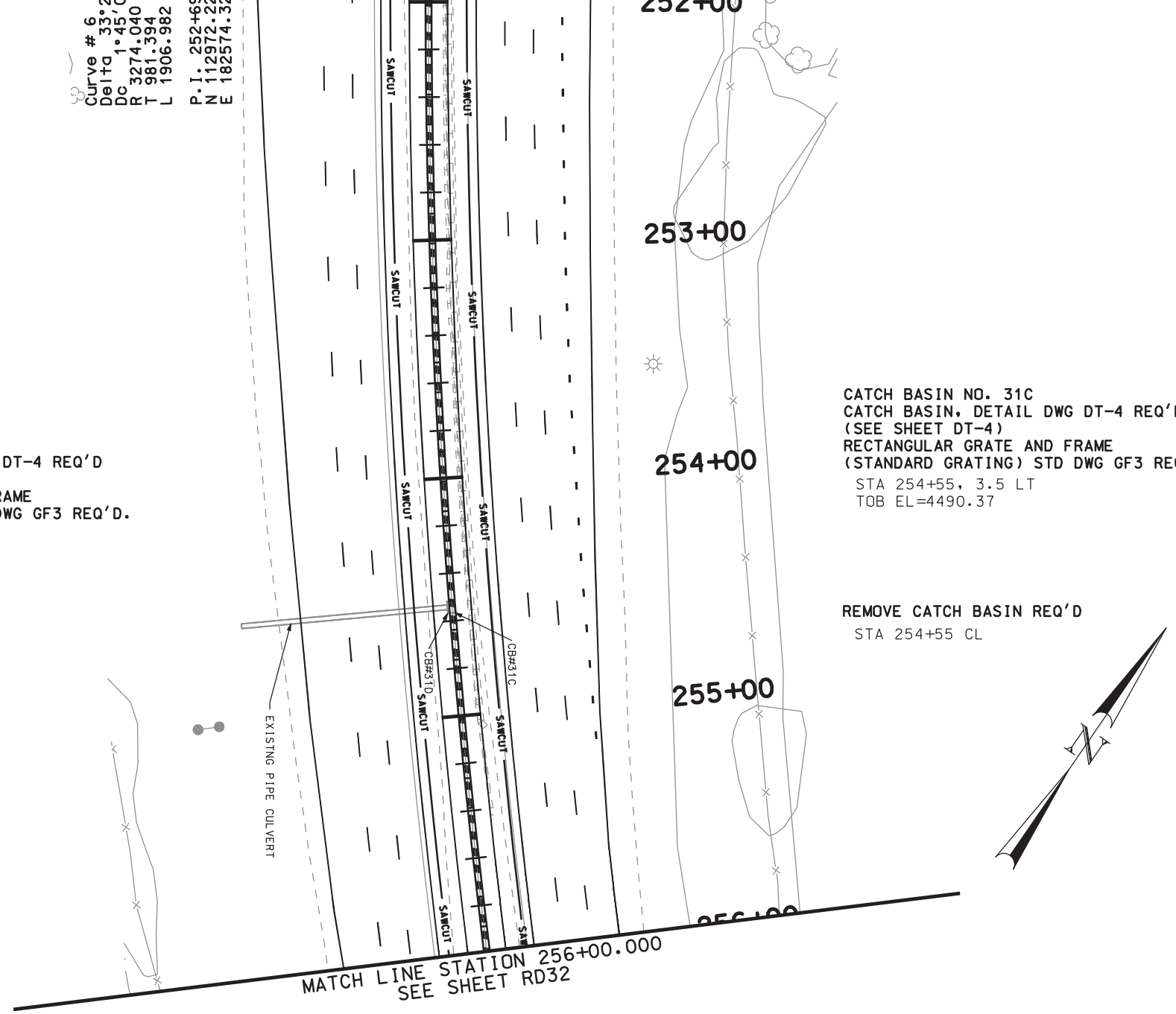


| | | | | | |
|---|---|---|---|---|---|
| I-15; CORRIDOR | UTAH DEPARTMENT OF TRANSPORTATION | | | | |
| IN UTAH COUNTY | REGION THREE -- OREM CITY, UTAH | | | | |
| PLAN SHEET | ROADWAY DESIGN | | | | |
| PROJECT NUMBER SP-15-6(52)241 | APPROVAL RECOMM. DATE / PROJECT DESIGN ENGINEER | DESIGN JAH 02-05 | CHECK SMM 02-05 | REVIEW | |
| | APPROVED FOR USE BY UDOT DATE / PRECONSTRUCTION ENGINEER | DRAWN JAH 02-05 | CHECK SMM 02-05 | DATE | |
| | | QUANT. JAH 02-05 | CHECK SMM 02-05 | BY | |

| NO. | DATE | DESIGN REV.BY | MAPS CORR.BY | PARCELS AFFECTED | REQUEST BY | REMARKS |
|---|---|---|---|---|---|---|
| | | ORIGINAL SUBMISSION FOR AUTHORIZATION | | | | |
| DATE | | REVISIONS | | | | |

UTAH COUNTY

SHEET NO. RD-31

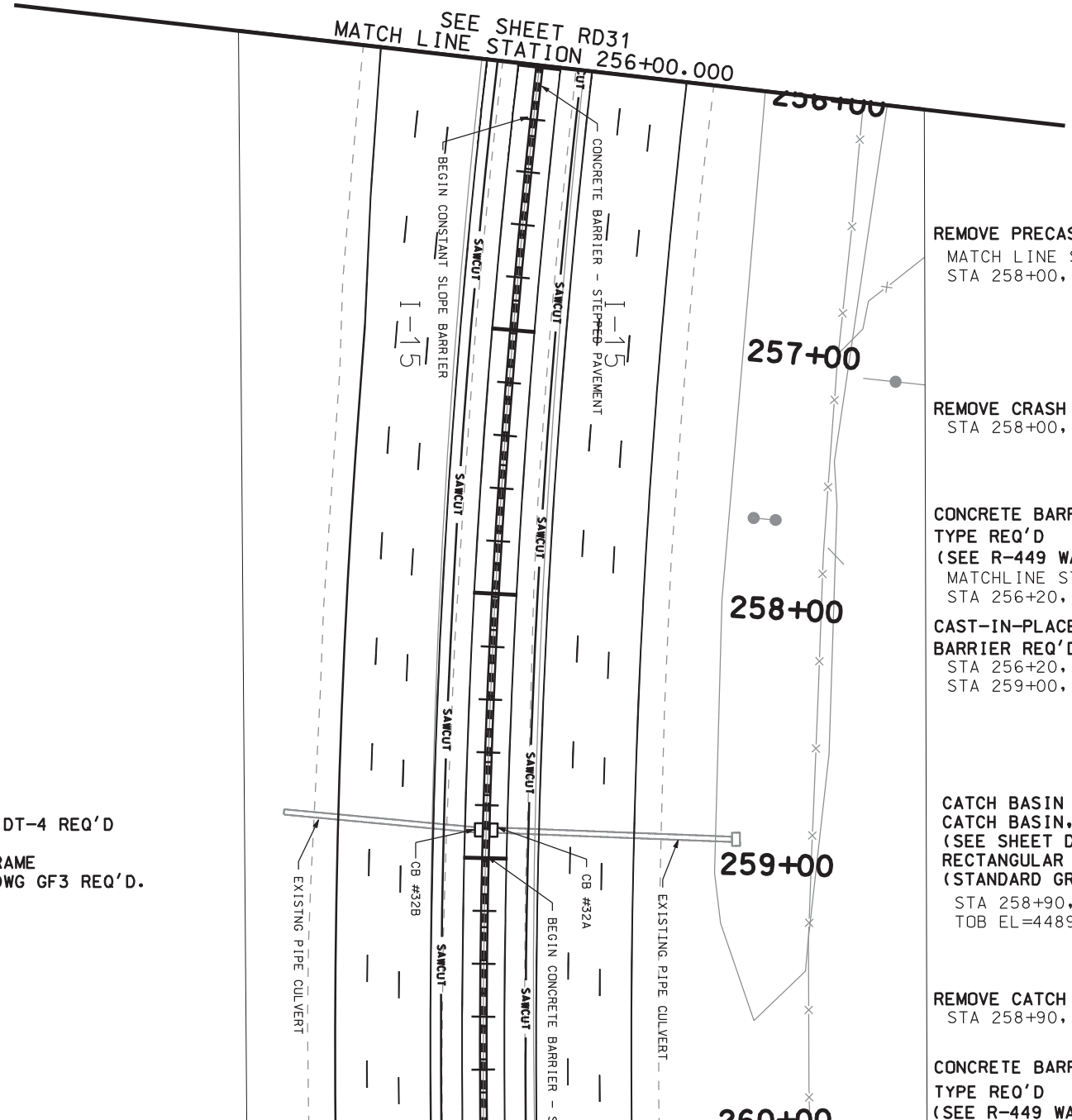


REMOVE PRECAST CONCRETE BARRIER REQ'D
MATCH LINE STA 256+00, 8 LT TO
STA 258+00, 8 LT

REMOVE CRASH CUSHION REQ'D
STA 258+00, LT

CONCRETE BARRIER - STEPPED PAVEMENT
TYPE REQ'D
(SEE R-449 WALL C)
MATCHLINE STA 256+00, CL TO
STA 256+20, CL

CAST-IN-PLACE CONTANT SLOPE
BARRIER REQ'D
STA 256+20, CL TO
STA 259+00, CL

CATCH BASIN NO. 32B
CATCH BASIN, DETAIL DWG DT-4 REQ'D
(SEE SHEET DT-4)
RECTANGULAR GRATE AND FRAME
(STANDARD GRATING) STD DWG GF3 REQ'D.
STA 258+90, 3.5 RT
TOB EL=4488.13

CATCH BASIN NO. 32A
CATCH BASIN, DETAIL DWG DT-4 REQ'D
(SEE SHEET DT-4)
RECTANGULAR GRATE AND FRAME
(STANDARD GRATING) STD DWG GF3 REQ'D.
STA 258+90, 3.5 LT
TOB EL=4489.24

REMOVE CATCH BASIN REQ'D
STA 258+90, CL

CONCRETE BARRIER - STEPPED PAVEMENT
TYPE REQ'D
(SEE R-449 WALL D)

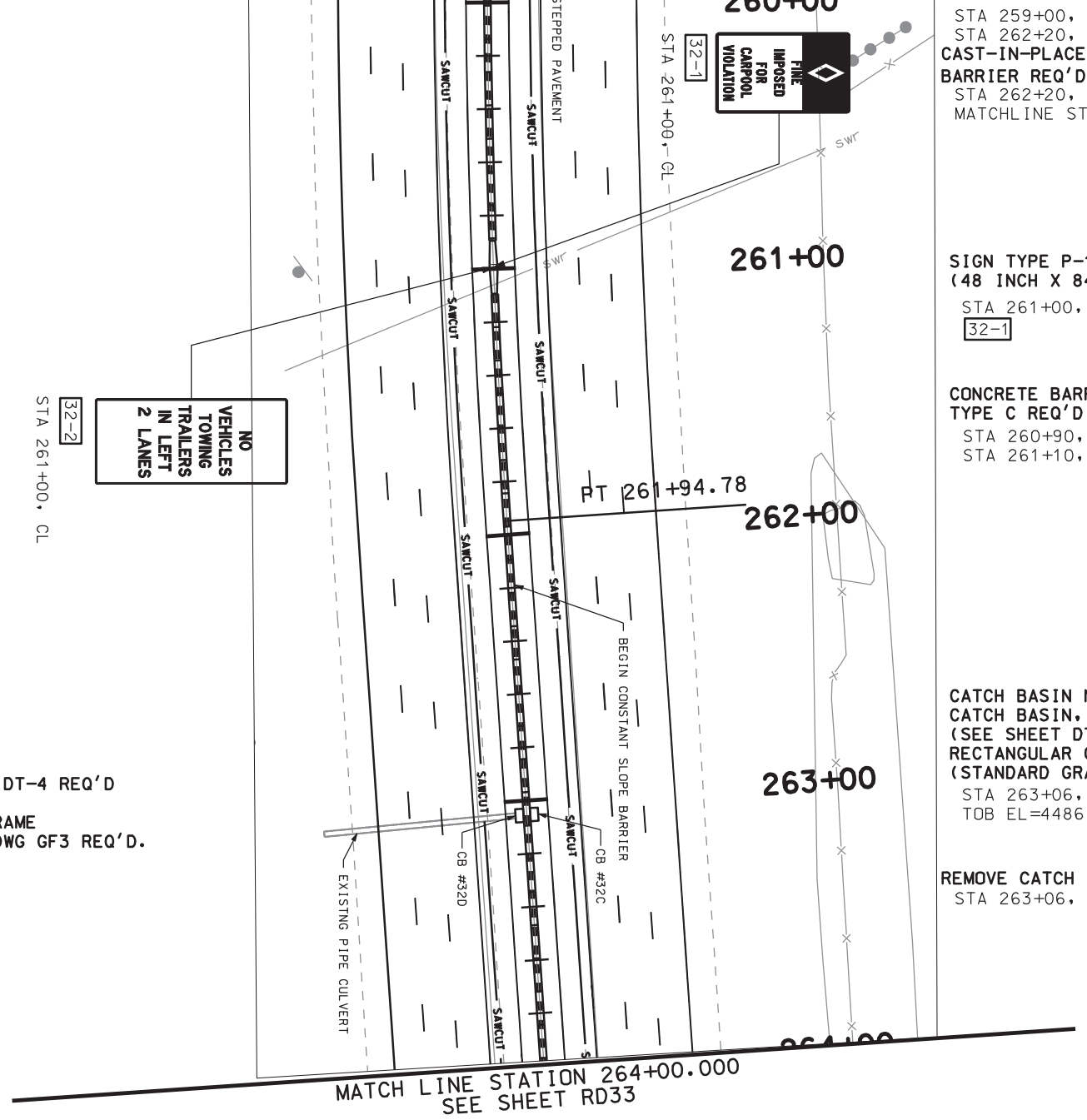


STA 259+00, CL TO
STA 262+20, CL
**CAST-IN-PLACE CONTANT SLOPE BARRIER REQ'D**
STA 262+20, CL TO
MATCHLINE STA 264+00, CL

**SIGN TYPE P-1 REQ'D (48 INCH X 84 INCH)**
STA 261+00, CL
32-1

**CONCRETE BARRIER TRANSITION TYPE C REQ'D**
STA 260+90, CL TO
STA 261+10, CL

**SIGN TYPE P-1 REQ'D (48 INCH X 84 INCH)**
STA 261+00, CL
32-2

**CATCH BASIN NO. 32C**
**CATCH BASIN, DETAIL DWG DT-4 REQ'D (SEE SHEET DT-4)**
**RECTANGULAR GRATE AND FRAME (STANDARD GRATING) STD DWG GF3 REQ'D.**
STA 263+06, 3.5 LT
TOB EL=4486.36

**CATCH BASIN NO. 32D**
**CATCH BASIN, DETAIL DWG DT-4 REQ'D (SEE SHEET DT-4)**
**RECTANGULAR GRATE AND FRAME (STANDARD GRATING) STD DWG GF3 REQ'D.**
STA 263+06, 3.5 RT
TOB EL=4485.56

**REMOVE CATCH BASIN REQ'D**
STA 263+06, CL

| | | | | | | |
|---|---|---|---|---|---|---|
| SHEET NO. RD-32 | UTAH COUNTY | I-15; CORRIDOR IN UTAH COUNTY | UTAH DEPARTMENT OF TRANSPORTATION<br>REGION THREE -- OREM CITY, UTAH<br>ROADWAY DESIGN | | | |
| | | PLAN SHEET | APPROVAL RECOMM. ____ DATE ____ PROJECT DESIGN ENGINEER | DESIGN JAH 02-05 | CHECK SMM 02-05 | REVIEW |
| | | PROJECT NUMBER SP-15-6(52)241 | APPROVED FOR USE BY UDOT ____ DATE ____ PRECONSTRUCTION ENGINEER | DRAWN JAH 02-05 | CHECK SMM 02-05 | DATE ____ |
| | | | | QUANT. JAH 02-05 | CHECK SMM 02-05 | BY ____ |

| NO. | DATE | DESIGN REV. BY | MAPS CORR. BY | PARCELS AFFECTED | REQUEST BY | REMARKS |
|---|---|---|---|---|---|---|
| | | ORIGINAL SUBMISSION FOR AUTHORIZATION | | | | |
| | DATE | REVISIONS | | | | |

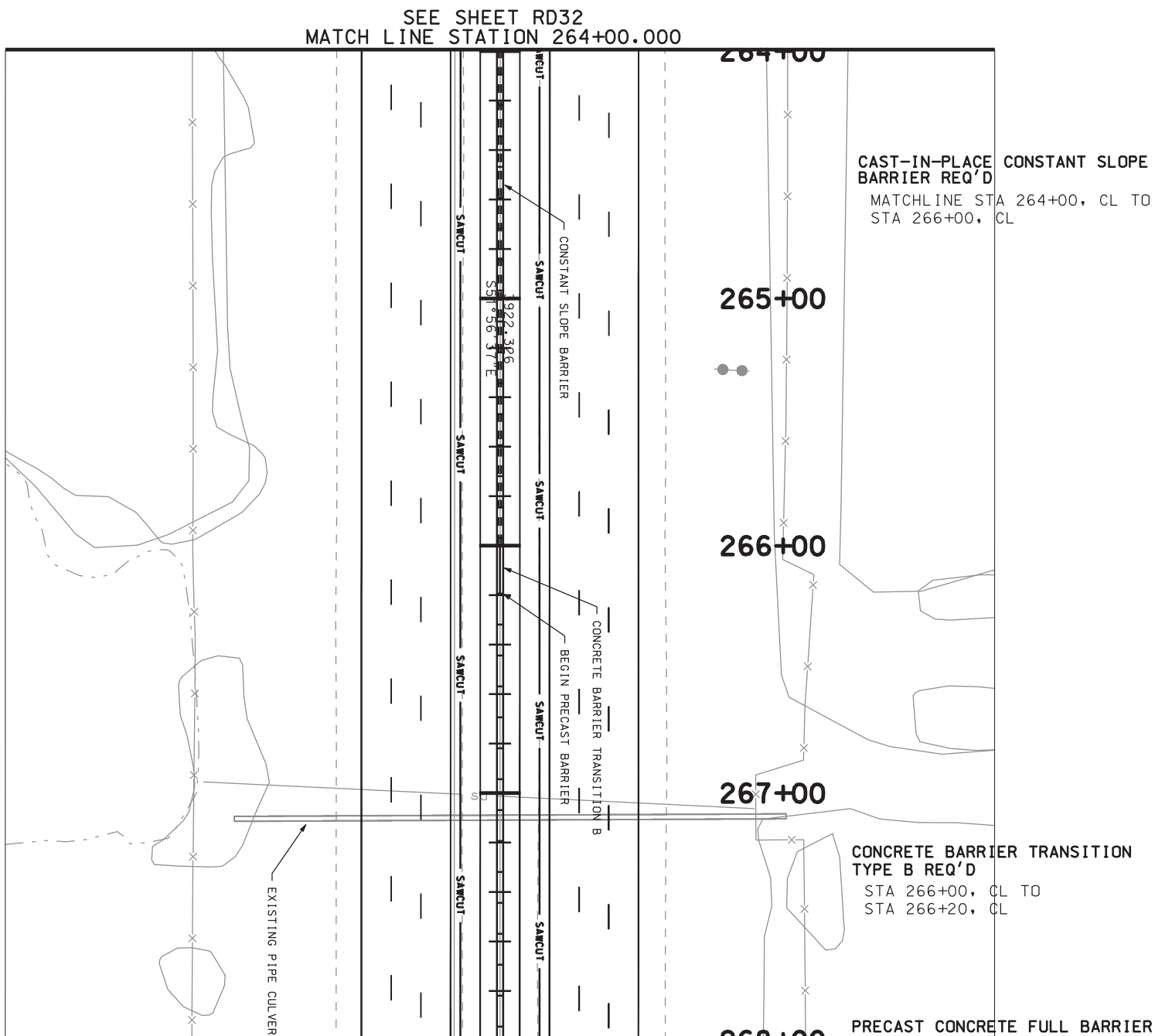
SEE SHEET RD32
MATCH LINE STATION 264+00.000
264+00
265+00
266+00
267+00
CAST-IN-PLACE CONSTANT SLOPE BARRIER REQ'D
MATCHLINE STA 264+00, CL TO STA 266+00, CL
CONCRETE BARRIER TRANSITION TYPE B REQ'D
STA 266+00, CL TO STA 266+20, CL
PRECAST CONCRETE FULL BARRIER
CONSTANT SLOPE BARRIER
CONCRETE BARRIER TRANSITION B
BEGIN PRECAST BARRIER
EXISTING PIPE CULVER
SAWCUT
S50°56'37"E
922.386

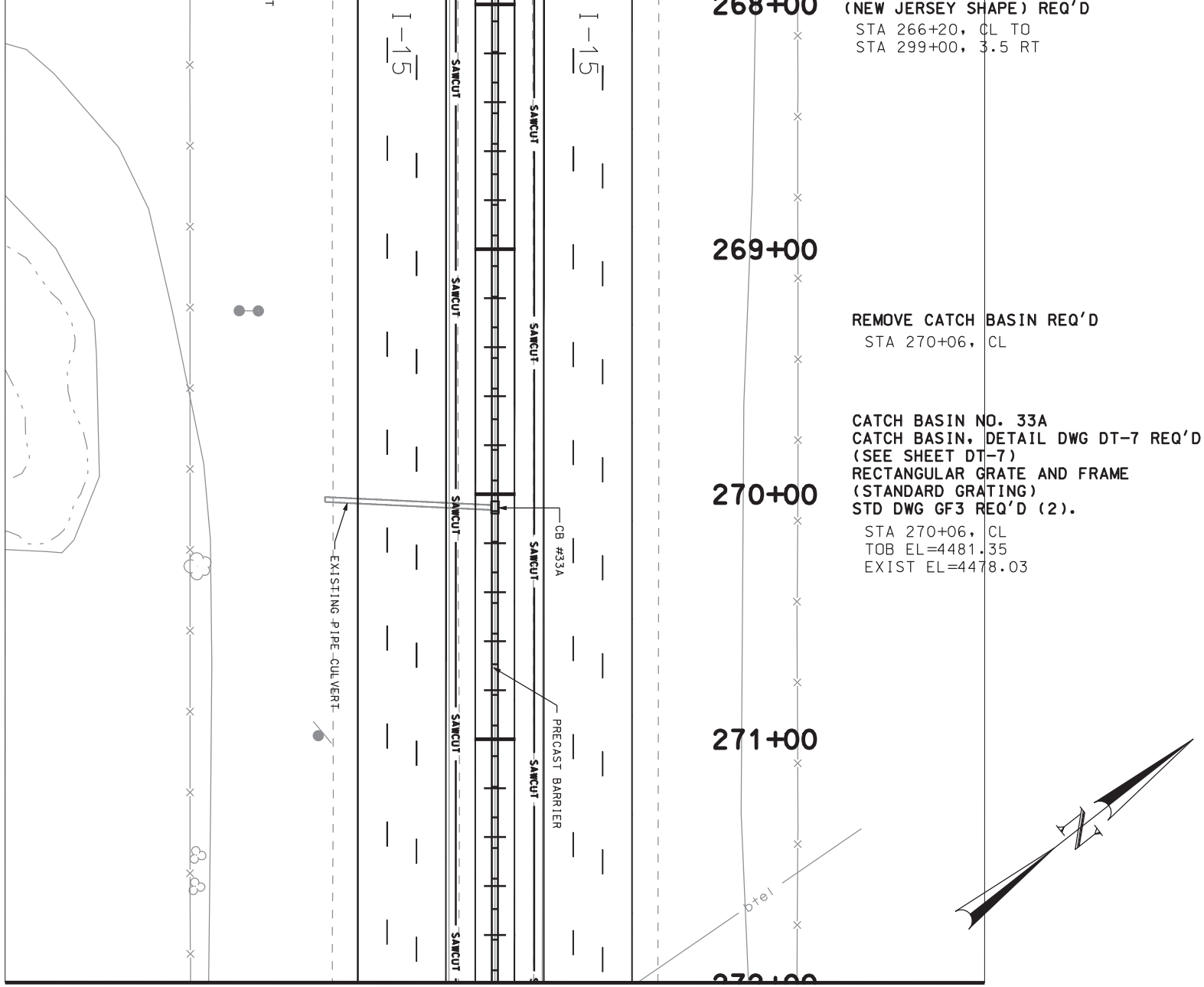


MATCH LINE STATION 272+00.000
SEE SHEET RD34

| | | | | | | |
|---|---|---|---|---|---|---|
| I-15; CORRIDOR | UTAH DEPARTMENT OF TRANSPORTATION | | | | | |
| IN UTAH COUNTY | REGION THREE -- OREM CITY, UTAH | | | | | |
| PLAN SHEET | ROADWAY DESIGN | | | | | |
| | APPROVAL RECOMM. DATE / PROJECT DESIGN ENGINEER | DESIGN JAH 02-05 | CHECK SMM 02-05 | REVIEW | | |
| | APPROVED FOR USE BY UDOT DATE / PRECONSTRUCTION ENGINEER | DRAWN JAH 02-05 | CHECK SMM 02-05 | DATE | | |
| PROJECT NUMBER SP-15-6(52)241 | | QUANT. JAH 02-05 | CHECK SMM 02-05 | BY | | |

| NO. | DATE | DESIGN REV. BY | MAPS CORR. BY | PARCELS AFFECTED | REQUEST BY | REMARKS |
|---|---|---|---|---|---|---|
| | | ORIGINAL SUBMISSION FOR AUTHORIZATION | | | | |
| | DATE | REVISIONS | | | | |

UTAH COUNTY

SHEET NO. RD-33

SEE SHEET RD33
MATCH LINE STATION 272+00.000

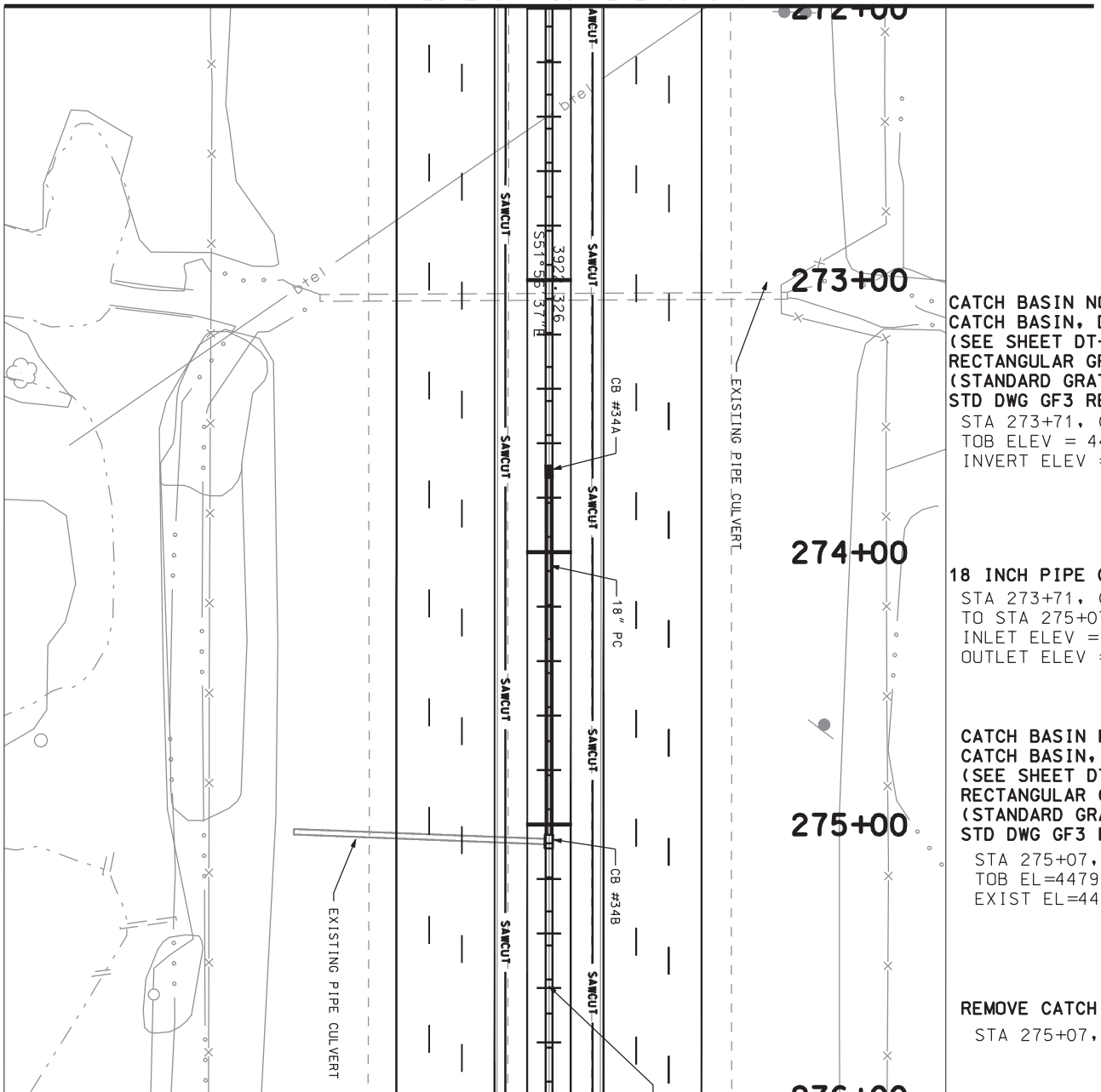


**CATCH BASIN NO. 34A**
**CATCH BASIN, DETAIL DWG DT-7 REQ'D**
**(SEE SHEET DT-7)**
**RECTANGULAR GRATE AND FRAME**
**(STANDARD GRATING)**
**STD DWG GF3 REQ'D (2).**
STA 273+71, CL
TOB ELEV = 4479.84
INVERT ELEV = 4476.44

**18 INCH PIPE CULVERT, CLASS A REQ'D**
STA 273+71, CL
TO STA 275+07, CL
INLET ELEV = 4476.84
OUTLET ELEV = 4475.90

**CATCH BASIN NO. 34B**
**CATCH BASIN, DETAIL DWG DT-7 REQ'D**
**(SEE SHEET DT-7)**
**RECTANGULAR GRATE AND FRAME**
**(STANDARD GRATING)**
**STD DWG GF3 REQ'D (2).**
STA 275+07, CL
TOB EL=4479.95
EXIST EL=4476.46

**REMOVE CATCH BASIN REQ'D**
STA 275+07, CL

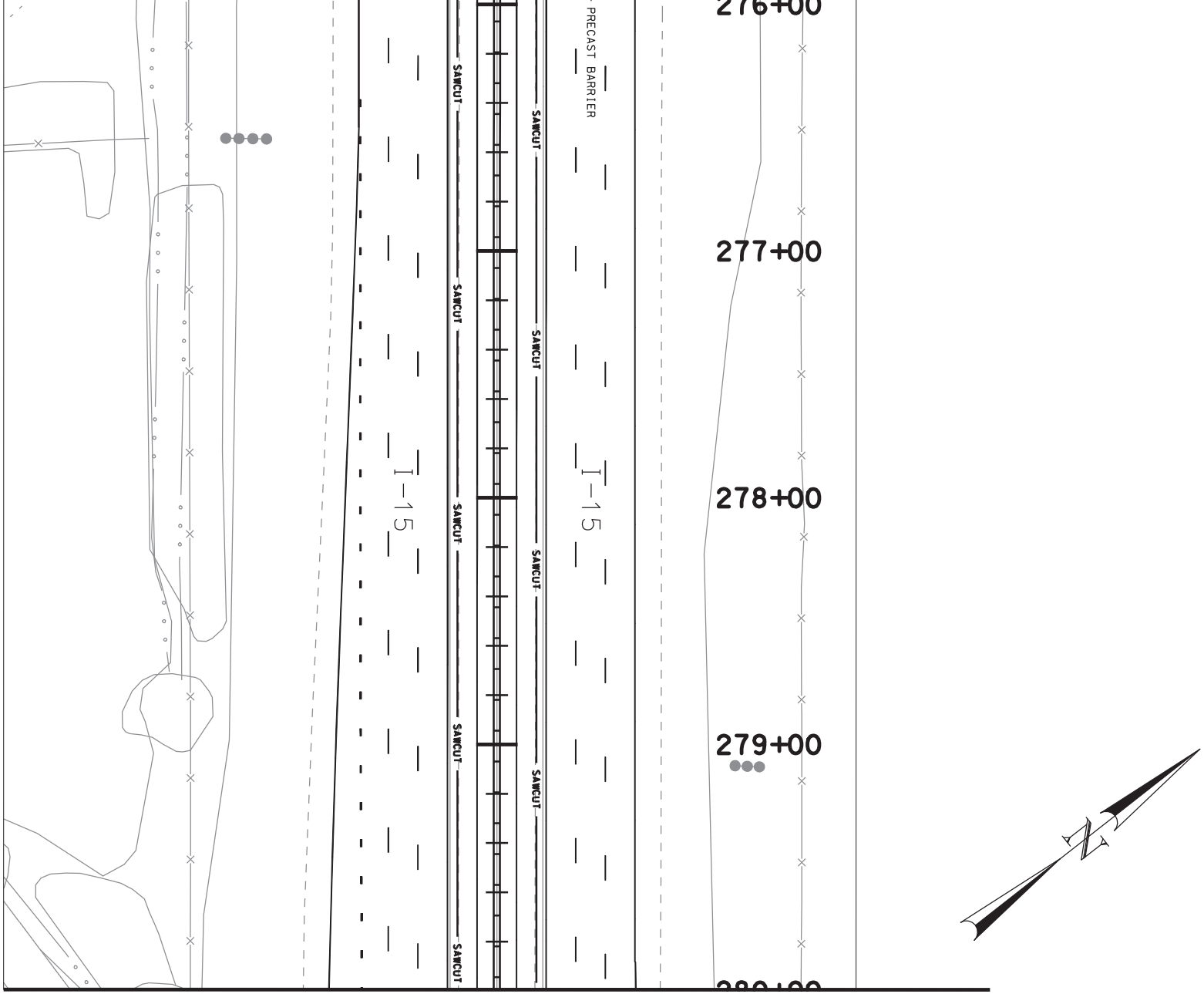


MATCH LINE STATION 280+00.000
SEE SHEET RD35

| | | | | | | |
|---|---|---|---|---|---|---|
| I-15; CORRIDOR | UTAH DEPARTMENT OF TRANSPORTATION | | | | | |
| IN UTAH COUNTY | REGION THREE -- OREM CITY, UTAH | | | | | |
| PLAN SHEET | ROADWAY DESIGN | | | | | |
| | APPROVAL RECOMM. ____ DATE ____ PROJECT DESIGN ENGINEER | DESIGN JAH 02-05 | CHECK SMM 02-05 | REVIEW | | |
| PROJECT NUMBER SP-15-6(52)241 | APPROVED FOR USE BY UDOT ____ DATE ____ PRECONSTRUCTION ENGINEER | DRAWN JAH 02-05 | CHECK SMM 02-05 | DATE ____ | | |
| | | QUANT. JAH 02-05 | CHECK SMM 02-05 | BY ____ | | |

| NO. | DATE | DESIGN REV. BY | MAPS CORR. BY | PARCELS AFFECTED | REQUEST BY | REMARKS |
|---|---|---|---|---|---|---|
| | | ORIGINAL SUBMISSION FOR AUTHORIZATION | | | | |
| | DATE | REVISIONS | | | | |

UTAH COUNTY

SHEET NO. RD-34

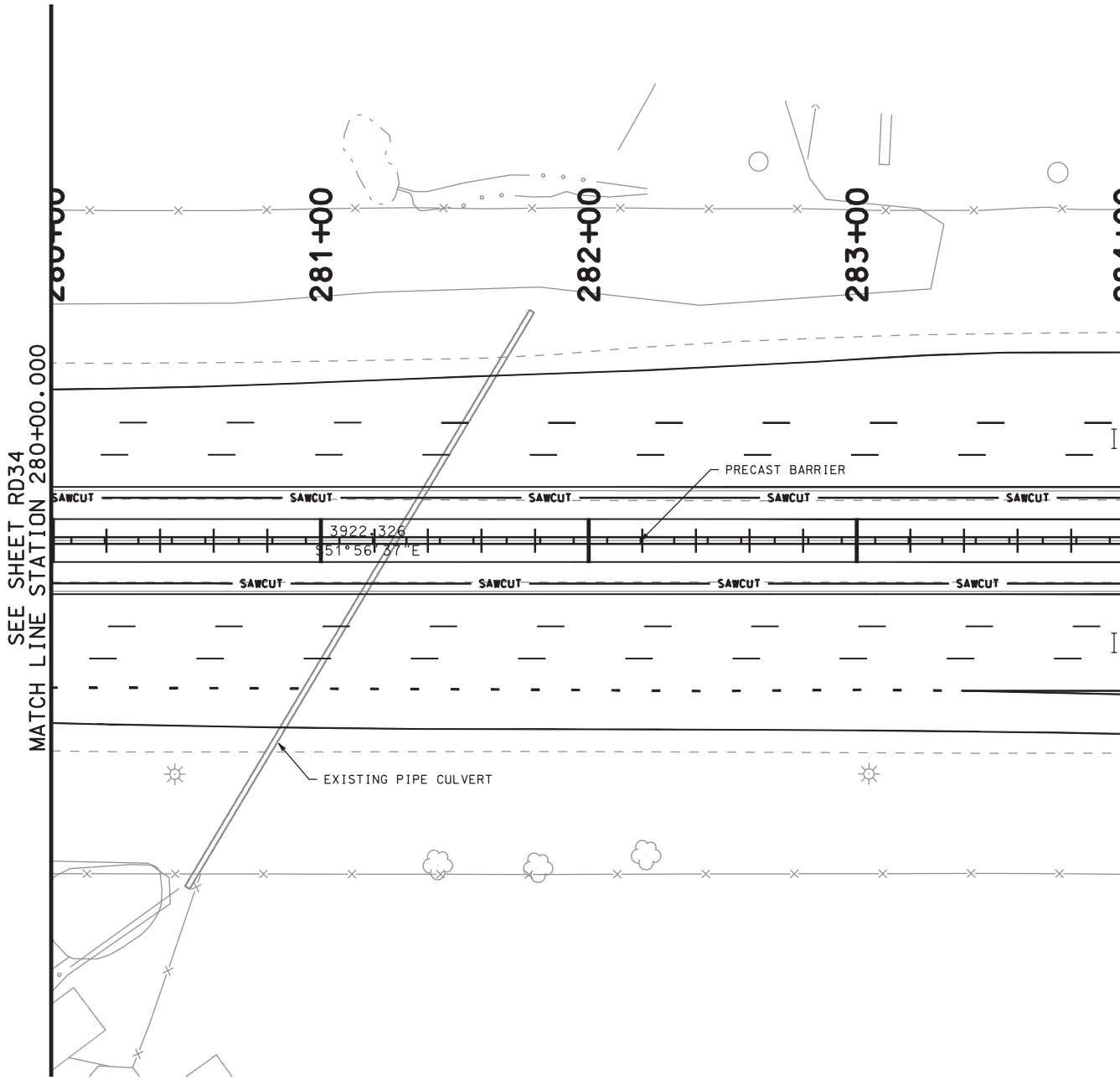
280+00
281+00
282+00
283+00
SEE SHEET RD34
MATCH LINE STATION 280+00.000
PRECAST BARRIER
SAWCUT
3922.326
S51°56'37"E
EXISTING PIPE CULVERT

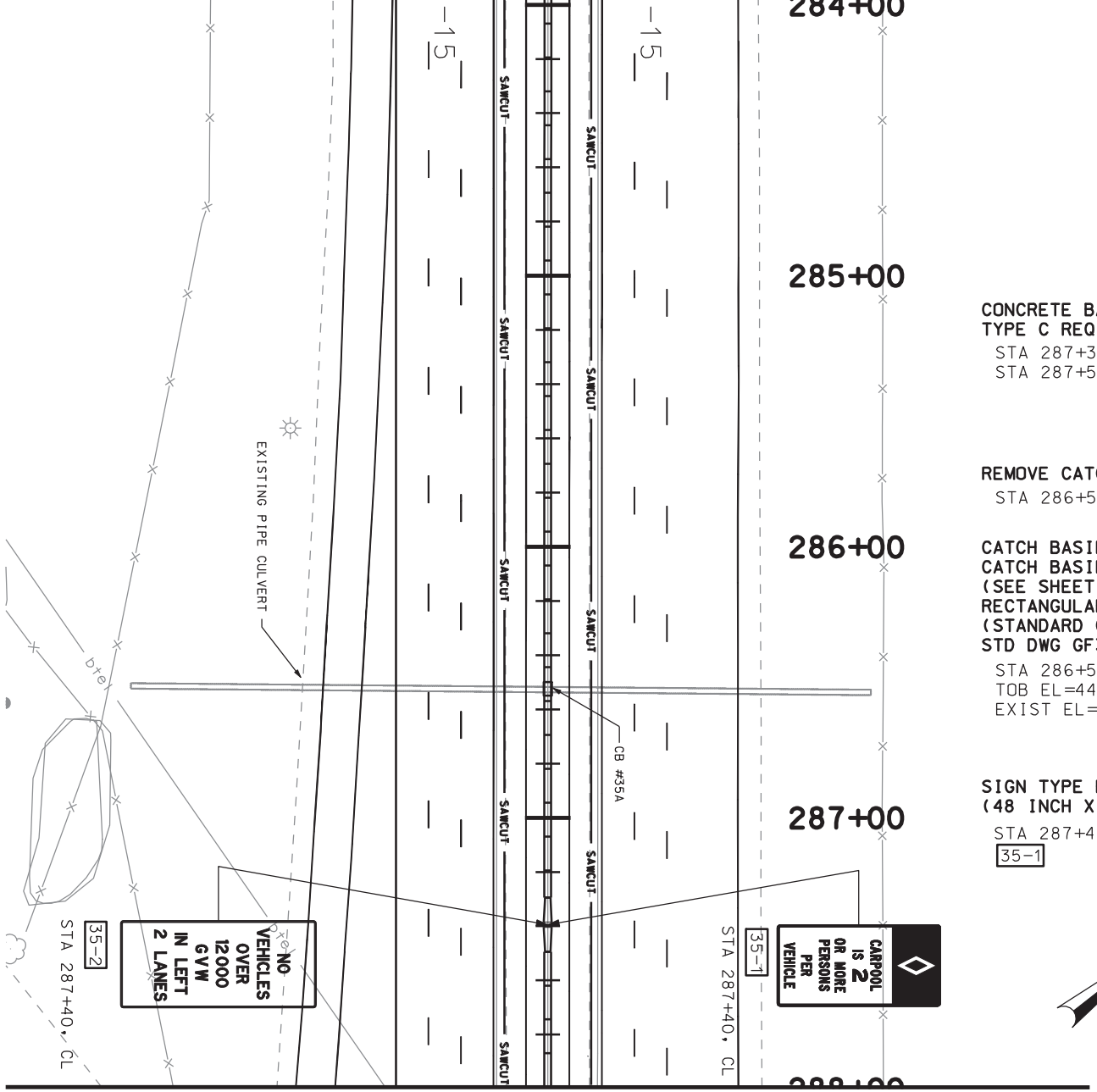


CONCRETE BARRIER TRANSITION
TYPE C REQ'D
STA 287+30, CL TO
STA 287+50, CL

REMOVE CATCH BASIN REQ'D
STA 286+53, CL

CATCH BASIN NO. 35A
CATCH BASIN, DETAIL DWG DT-7 REQ'D
(SEE SHEET DT-7)
RECTANGULAR GRATE AND FRAME
(STANDARD GRATING)
STD DWG GF3 REQ'D (2).
STA 286+53, CL
TOB EL=4484.15
EXIST EL=4480.53

SIGN TYPE P-1 REQ'D
(48 INCH X 96 INCH)
STA 287+40, CL
35-1

SIGN TYPE P-1 REQ'D
(48 INCH X 84 INCH)
STA 287+40, CL
35-2

MATCH LINE STATION 288+00.000
SEE SHEET RD36

| | | | | | | |
|---|---|---|---|---|---|---|
| SHEET NO. RD-35 | UTAH COUNTY | I-15; CORRIDOR IN UTAH COUNTY | UTAH DEPARTMENT OF TRANSPORTATION<br>REGION THREE -- OREM CITY, UTAH<br>ROADWAY DESIGN | | | |
| | | PLAN SHEET | APPROVAL RECOMM. DATE / PROJECT DESIGN ENGINEER | DESIGN JAH 02-05 | CHECK SMM 02-05 | REVIEW |
| | | PROJECT NUMBER SP-15-6(52)241 | APPROVED FOR USE BY UDOT DATE / PRECONSTRUCTION ENGINEER | DRAWN JAH 02-05 | CHECK SMM 02-05 | DATE |
| | | | | QUANT. JAH 02-05 | CHECK SMM 02-05 | BY |

| NO. | DATE | DESIGN REV. BY | MAPS CORR. BY | PARCELS AFFECTED | REQUEST BY | REMARKS |
|---|---|---|---|---|---|---|
| | | ORIGINAL SUBMISSION FOR AUTHORIZATION | | | | |

DATE REVISIONS

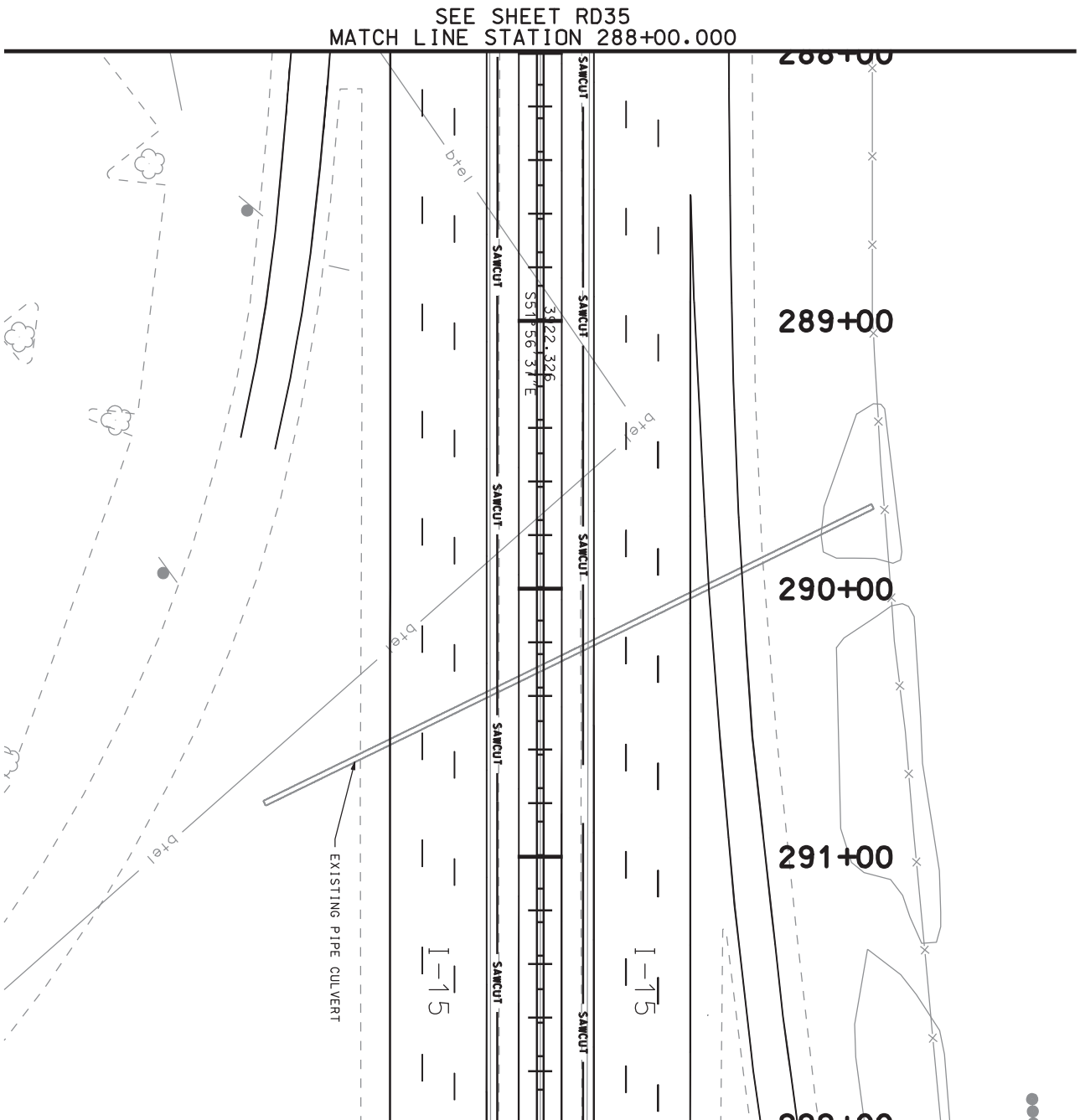
SEE SHEET RD35
MATCH LINE STATION 288+00.000
288+00
289+00
290+00
291+00
292+00
SAWCUT
SAWCUT
SAWCUT
SAWCUT
SAWCUT
SAWCUT
SAWCUT
SAWCUT
I-15
I-15
S51°56'37"E
3122.326
btel
btel
btel
btel
EXISTING PIPE CULVERT

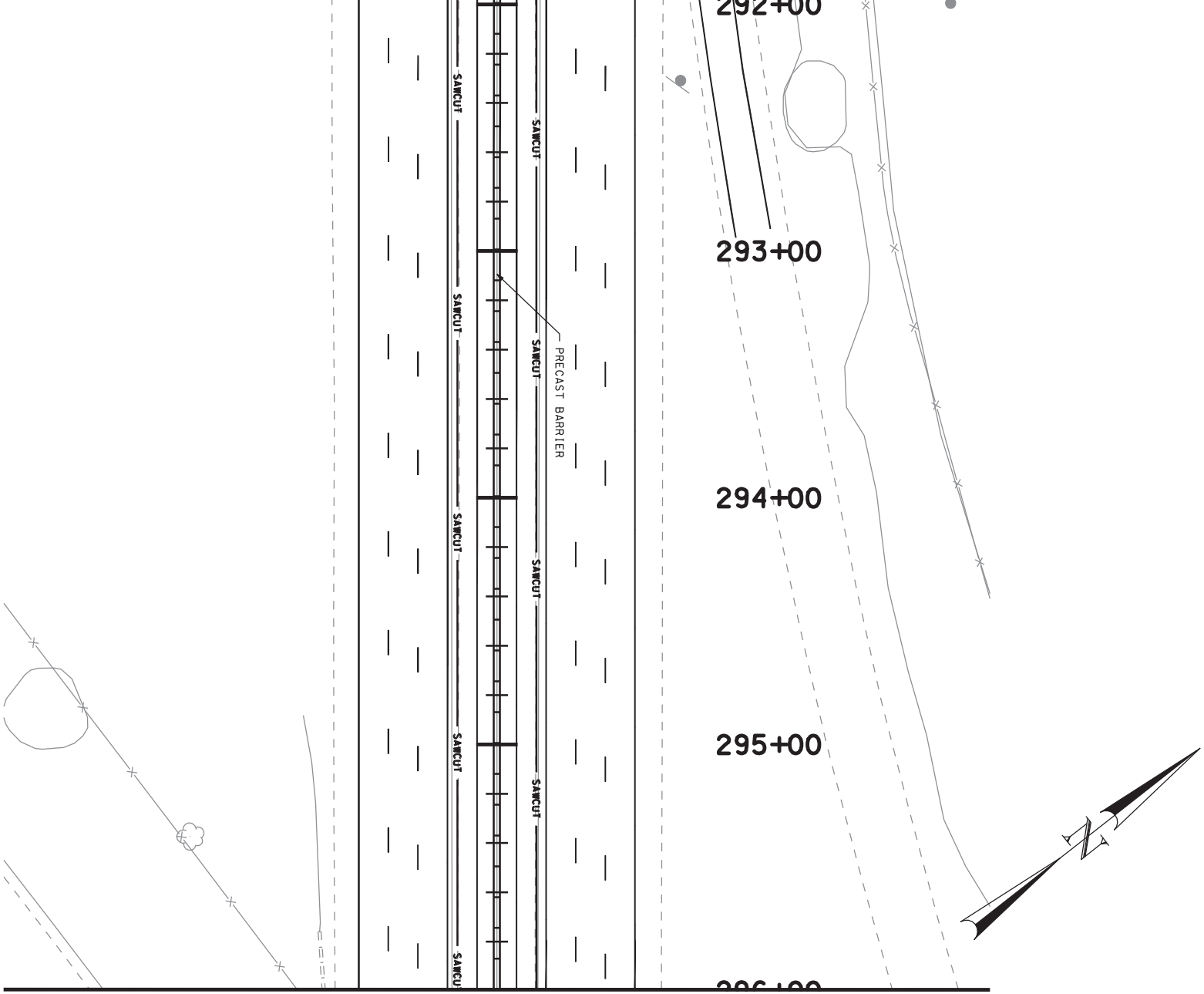


MATCH LINE STATION 296+00.000
SEE SHEET RD37

| | | | | | | |
|---|---|---|---|---|---|---|
| SHEET NO. RD-36 | UTAH COUNTY | I-15; CORRIDOR IN UTAH COUNTY | UTAH DEPARTMENT OF TRANSPORTATION<br>REGION THREE -- OREM CITY, UTAH<br>ROADWAY DESIGN | | | |
| | | PLAN SHEET | APPROVAL RECOMM. ____ DATE ____ PROJECT DESIGN ENGINEER | DESIGN JAH 02-05 | CHECK SMM 02-05 | REVIEW |
| | | PROJECT NUMBER SP-15-6(52)241 | APPROVED FOR USE BY UDOT ____ DATE ____ PRECONSTRUCTION ENGINEER | DRAWN JAH 02-05 | CHECK SMM 02-05 | DATE ____ |
| | | | | QUANT. JAH 02-05 | CHECK SMM 02-05 | BY ____ |

| NO. | DATE | DESIGN REV. BY | MAPS CORR. BY | PARCELS AFFECTED | REQUEST BY | REMARKS |
|---|---|---|---|---|---|---|
| | | ORIGINAL SUBMISSION FOR AUTHORIZATION | | | | |
| | DATE | REVISIONS | | | | |

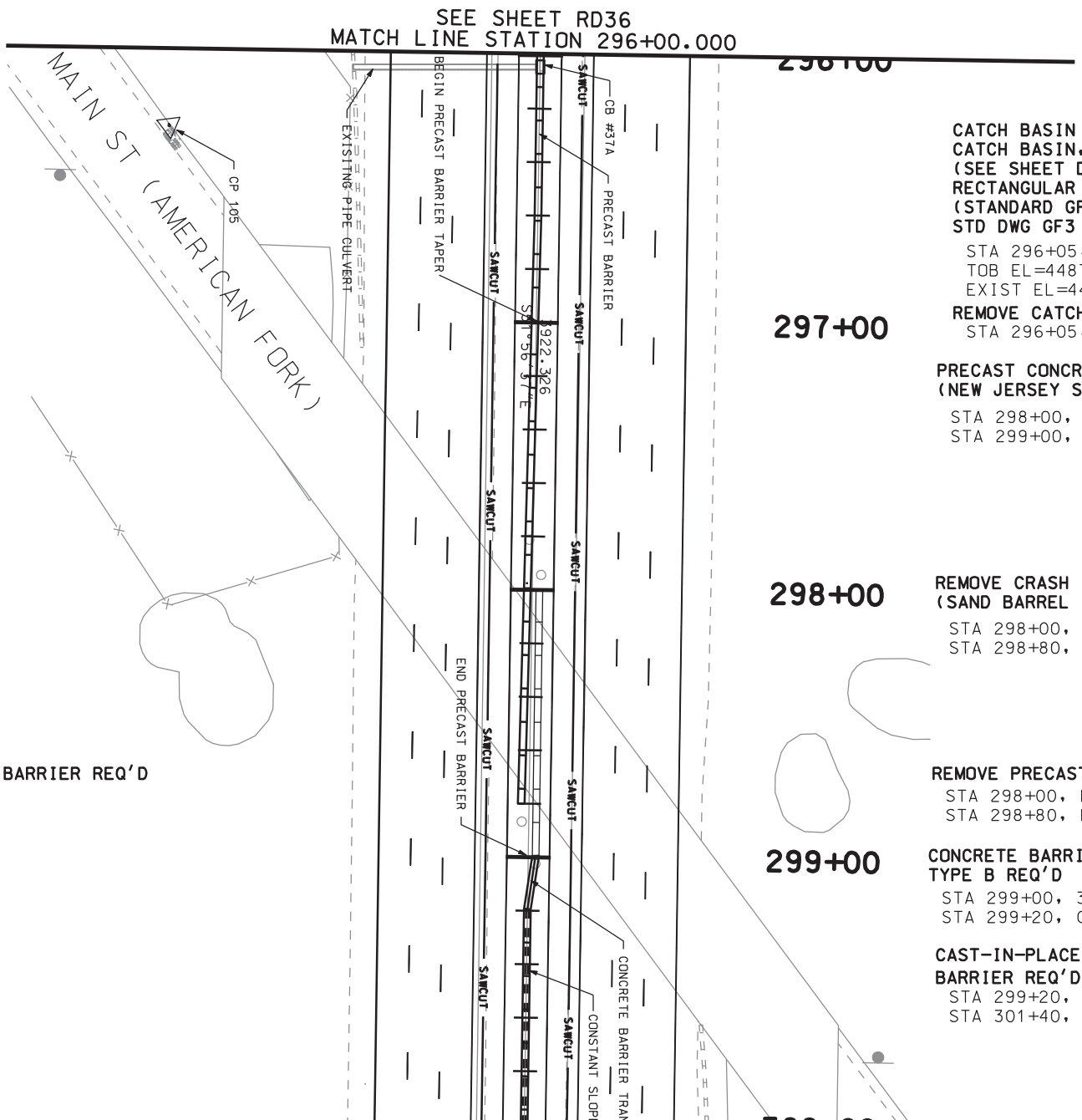


CATCH BASIN NO. 37A
CATCH BASIN, DETAIL DWG DT-7 REQ'D
(SEE SHEET DT-7)
RECTANGULAR GRATE AND FRAME
(STANDARD GRATING)
STD DWG GF3 REQ'D (2).
STA 296+05, CL
TOB EL=4487.99
EXIST EL=4485.14

REMOVE CATCH BASIN REQ'D
STA 296+05, CL

PRECAST CONCRETE FULL BARRIER
(NEW JERSEY SHAPE) REQ'D
STA 298+00, 3.5 LT TO
STA 299+00, 3.5 LT

REMOVE CRASH CUSHION REQ'D
(SAND BARREL ARRAY)
STA 298+00, CL
STA 298+80, CL

REMOVE PRECAST CONCRETE BARRIER REQ'D
STA 298+00, RT TO
STA 298+80, RT

REMOVE PRECAST CONCRETE BARRIER REQ'D
STA 298+00, LT TO
STA 298+80, LT

CONCRETE BARRIER TRANSITION
TYPE B REQ'D
STA 299+00, 3.5 LT TO
STA 299+20, CL

CAST-IN-PLACE CONSTANT SLOPE
BARRIER REQ'D
STA 299+20, CL TO
STA 301+40, CL

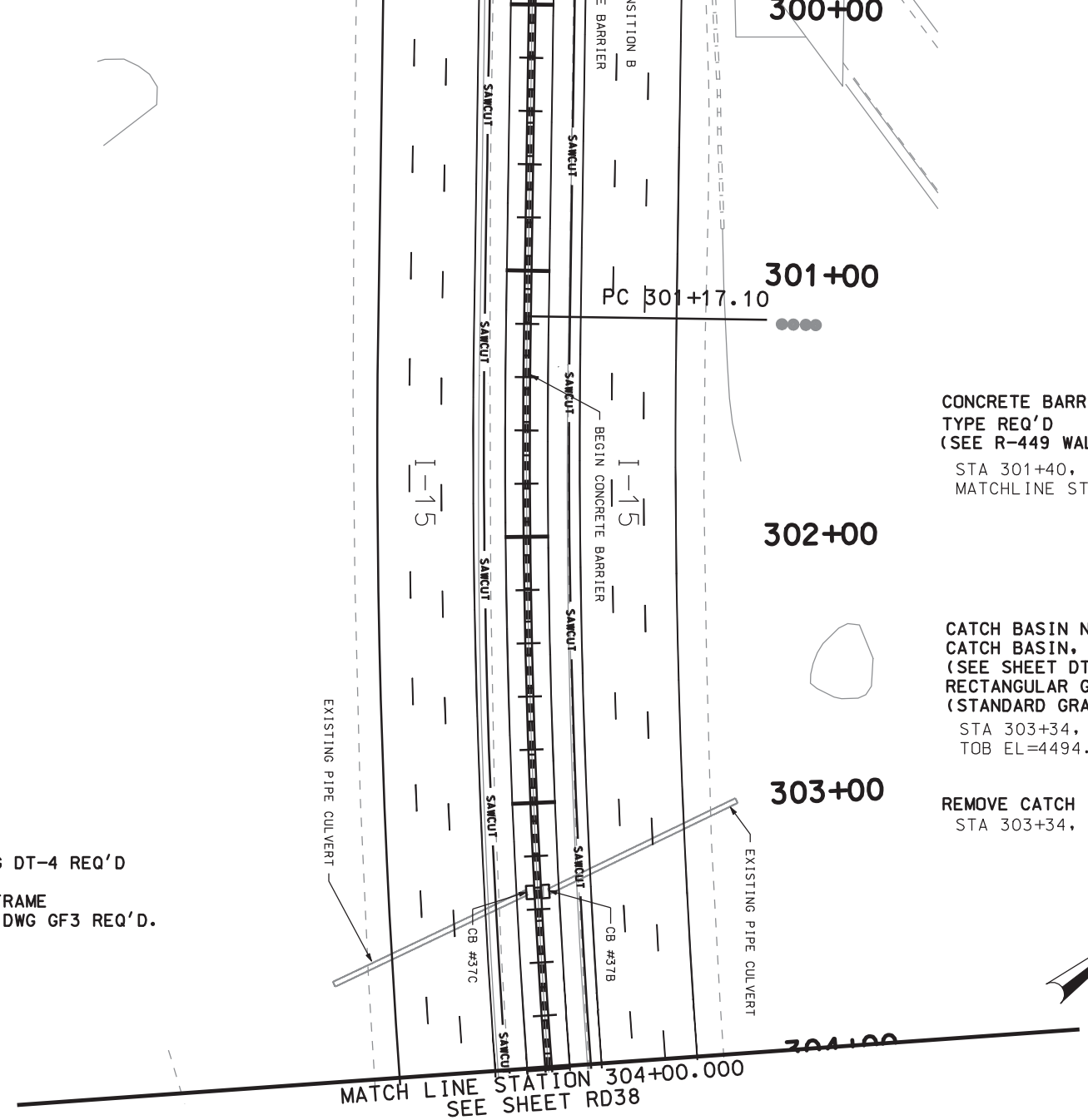


**CONCRETE BARRIER - STEPPED PAVEMENT TYPE REQ'D (SEE R-449 WALL E)**

STA 301+40, CL TO
MATCHLINE STA 304+00, CL

**CATCH BASIN NO. 37B**
**CATCH BASIN, DETAIL DWG DT-4 REQ'D (SEE SHEET DT-4)**
**RECTANGULAR GRATE AND FRAME (STANDARD GRATING) STD DWG GF3 REQ'D.**

STA 303+34, 3.5 LT
TOB EL=4494.40

**REMOVE CATCH BASIN REQ'D**

STA 303+34, CL

**CATCH BASIN NO. 37C**
**CATCH BASIN, DETAIL DWG DT-4 REQ'D (SEE SHEET DT-4)**
**RECTANGULAR GRATE AND FRAME (STANDARD GRATING) STD DWG GF3 REQ'D.**

STA 303+34, 3.5 RT
TOB EL=4494.12

| | | | | | |
|---|---|---|---|---|---|
| SHEET NO. RD-37 | UTAH COUNTY | I-15; CORRIDOR IN UTAH COUNTY | UTAH DEPARTMENT OF TRANSPORTATION<br>REGION THREE -- OREM CITY, UTAH<br>ROADWAY DESIGN | | |
| | | PLAN SHEET | APPROVAL RECOMM. DATE PROJECT DESIGN ENGINEER | DESIGN JAH 02-05 / CHECK SMM 02-05 | REVIEW |
| | | PROJECT NUMBER SP-15-6(52)241 | APPROVED FOR USE BY UDOT DATE PRECONSTRUCTION ENGINEER | DRAWN JAH 02-05 / CHECK SMM 02-05 | DATE |
| | | | | QUANT. JAH 02-05 / CHECK SMM 02-05 | BY |

| NO. | DATE | DESIGN REV. BY | MAPS CORR. BY | PARCELS AFFECTED | REQUEST BY | REMARKS |
|---|---|---|---|---|---|---|
| | | ORIGINAL SUBMISSION FOR AUTHORIZATION | | | | |

DATE REVISIONS

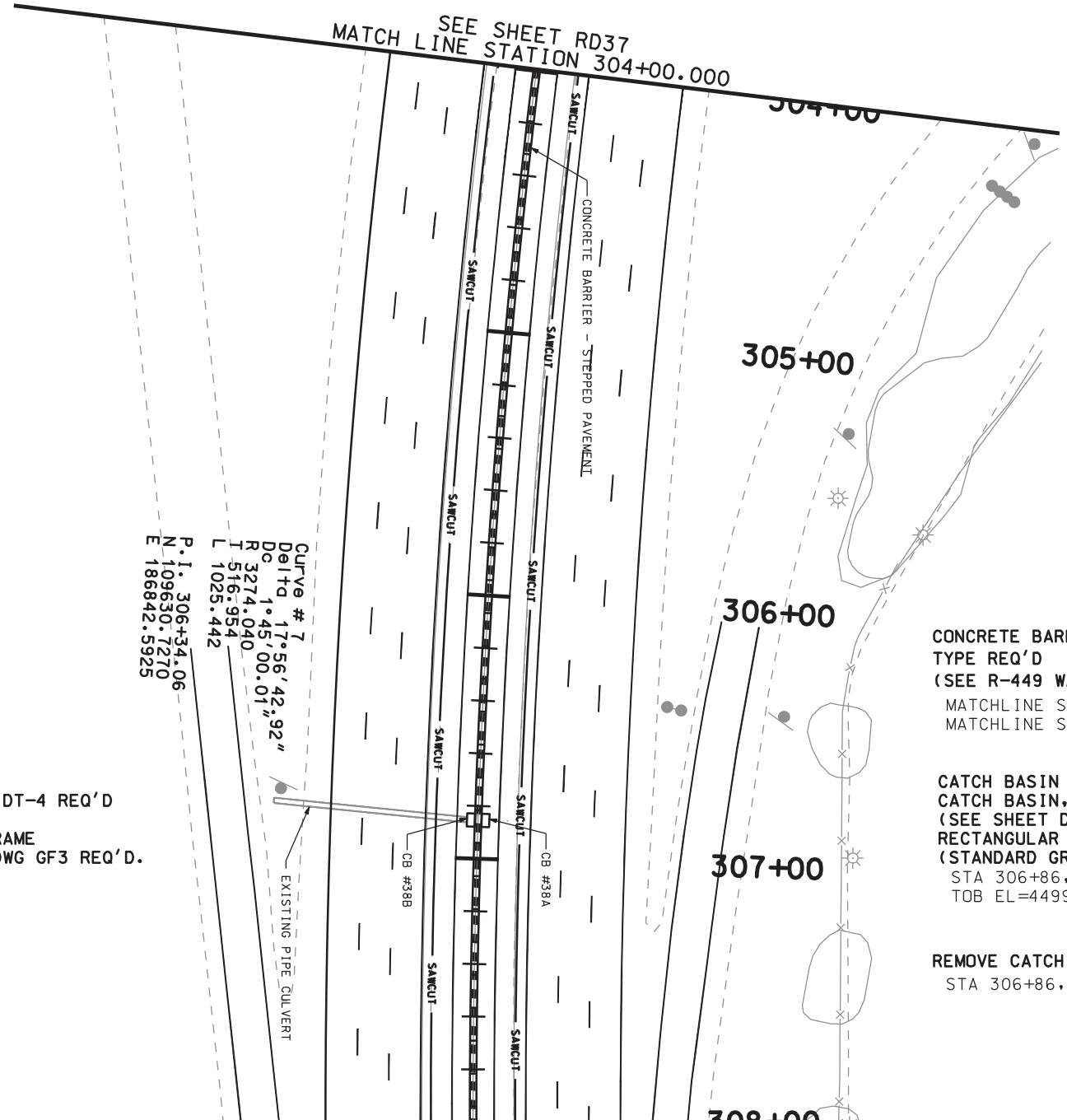


CONCRETE BARRIER - STEPPED PAVEMENT
TYPE REQ'D
(SEE R-449 WALL E)
MATCHLINE STA 304+00, CL TO
MATCHLINE STA 312+00, CL

CATCH BASIN NO. 38A
CATCH BASIN, DETAIL DWG DT-4 REQ'D
(SEE SHEET DT-4)
RECTANGULAR GRATE AND FRAME
(STANDARD GRATING) STD DWG GF3 REQ'D.
STA 306+86, 3.5 LT
TOB EL=4499.76

REMOVE CATCH BASIN REQ'D
STA 306+86, CL

CATCH BASIN NO. 38B
CATCH BASIN, DETAIL DWG DT-4 REQ'D
(SEE SHEET DT-4)
RECTANGULAR GRATE AND FRAME
(STANDARD GRATING) STD DWG GF3 REQ'D.
STA 306+86, 3.5 RT
TOB EL=4497.26

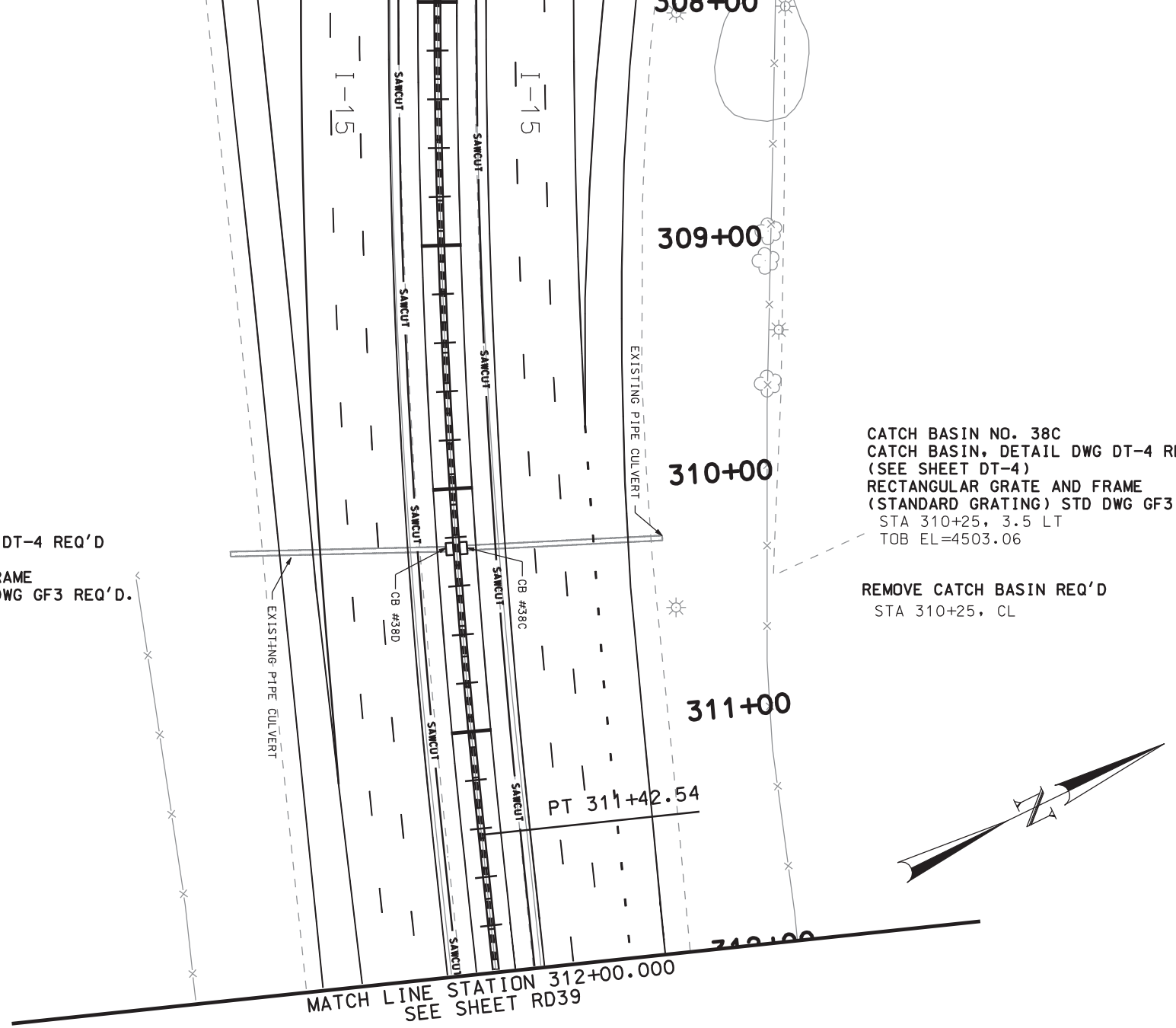


| | | | | | |
|---|---|---|---|---|---|
| I-15; CORRIDOR | UTAH DEPARTMENT OF TRANSPORTATION | | | | |
| IN UTAH COUNTY | REGION THREE -- OREM CITY, UTAH | | | | |
| PLAN SHEET | ROADWAY DESIGN | | | | |
| PROJECT NUMBER SP-15-6(52)241 | APPROVAL RECOMM. DATE / PROJECT DESIGN ENGINEER | DESIGN JAH 02-05 | CHECK SMM 02-05 | REVIEW | |
| | APPROVED FOR USE BY UDOT DATE / PRECONSTRUCTION ENGINEER | DRAWN JAH 02-05 | CHECK SMM 02-05 | DATE | |
| | | QUANT. JAH 02-05 | CHECK SMM 02-05 | BY | |

| NO. | DATE | DESIGN REV. BY | MAPS CORR. BY | PARCELS AFFECTED | REQUEST BY | REMARKS |
|---|---|---|---|---|---|---|
| | | ORIGINAL SUBMISSION FOR AUTHORIZATION | | | | |
| DATE | | REVISIONS | | | | |

SHEET NO. RD-38

UTAH COUNTY

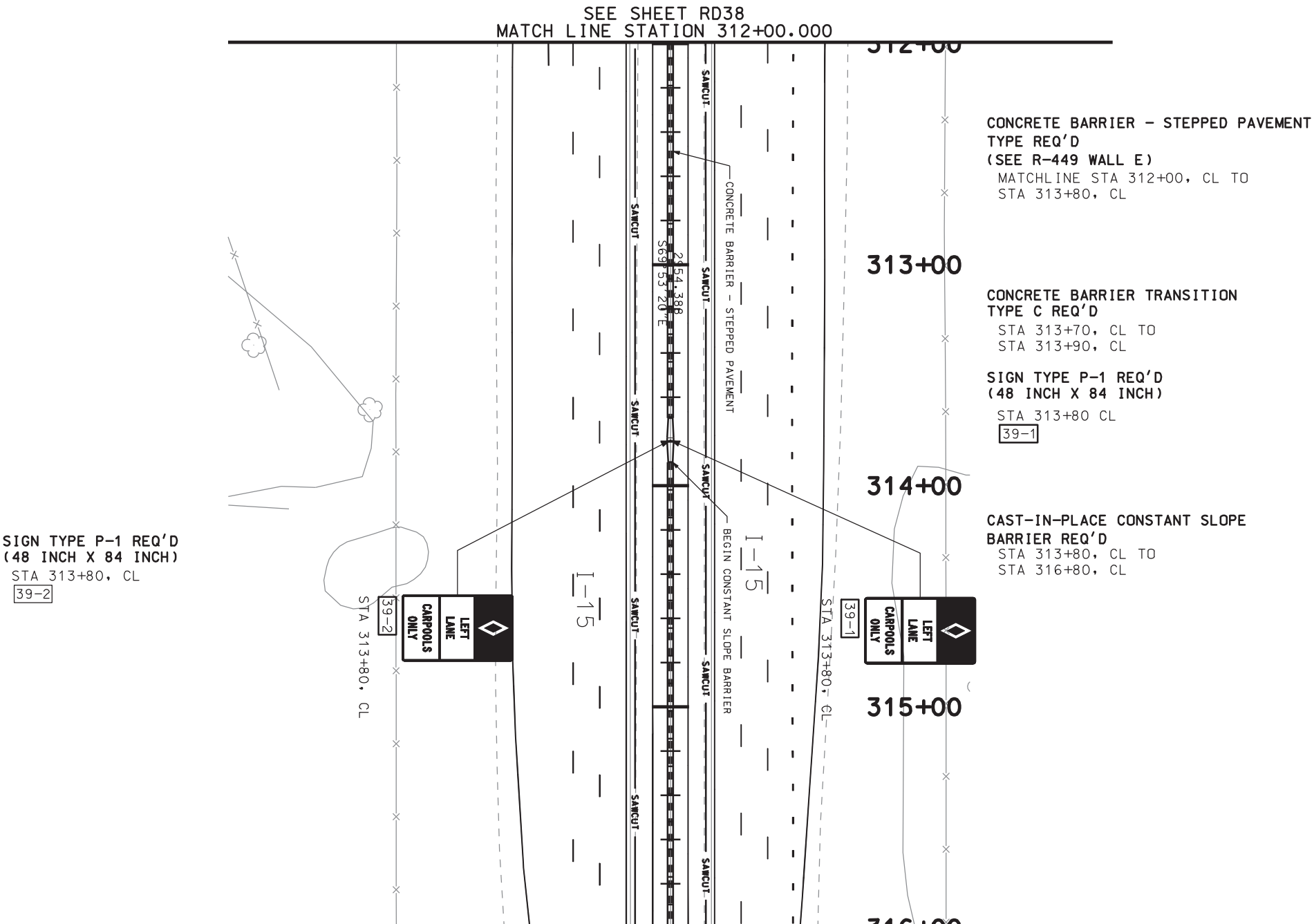
SEE SHEET RD38
MATCH LINE STATION 312+00.000
312+00
313+00
314+00
315+00
316+00
CONCRETE BARRIER - STEPPED PAVEMENT
TYPE REQ'D
(SEE R-449 WALL E)
MATCHLINE STA 312+00, CL TO
STA 313+80, CL
CONCRETE BARRIER TRANSITION
TYPE C REQ'D
STA 313+70, CL TO
STA 313+90, CL
SIGN TYPE P-1 REQ'D
(48 INCH X 84 INCH)
STA 313+80 CL
39-1
CAST-IN-PLACE CONSTANT SLOPE
BARRIER REQ'D
STA 313+80, CL TO
STA 316+80, CL
SIGN TYPE P-1 REQ'D
(48 INCH X 84 INCH)
STA 313+80, CL
39-2
CONCRETE BARRIER - STEPPED PAVEMENT
BEGIN CONSTANT SLOPE BARRIER
S69°53'20"E
254.388
I-15
I-15
SAWCUT
LEFT LANE CARPOOLS ONLY
STA 313+80, CL
39-1
STA 313+80, CL
39-2

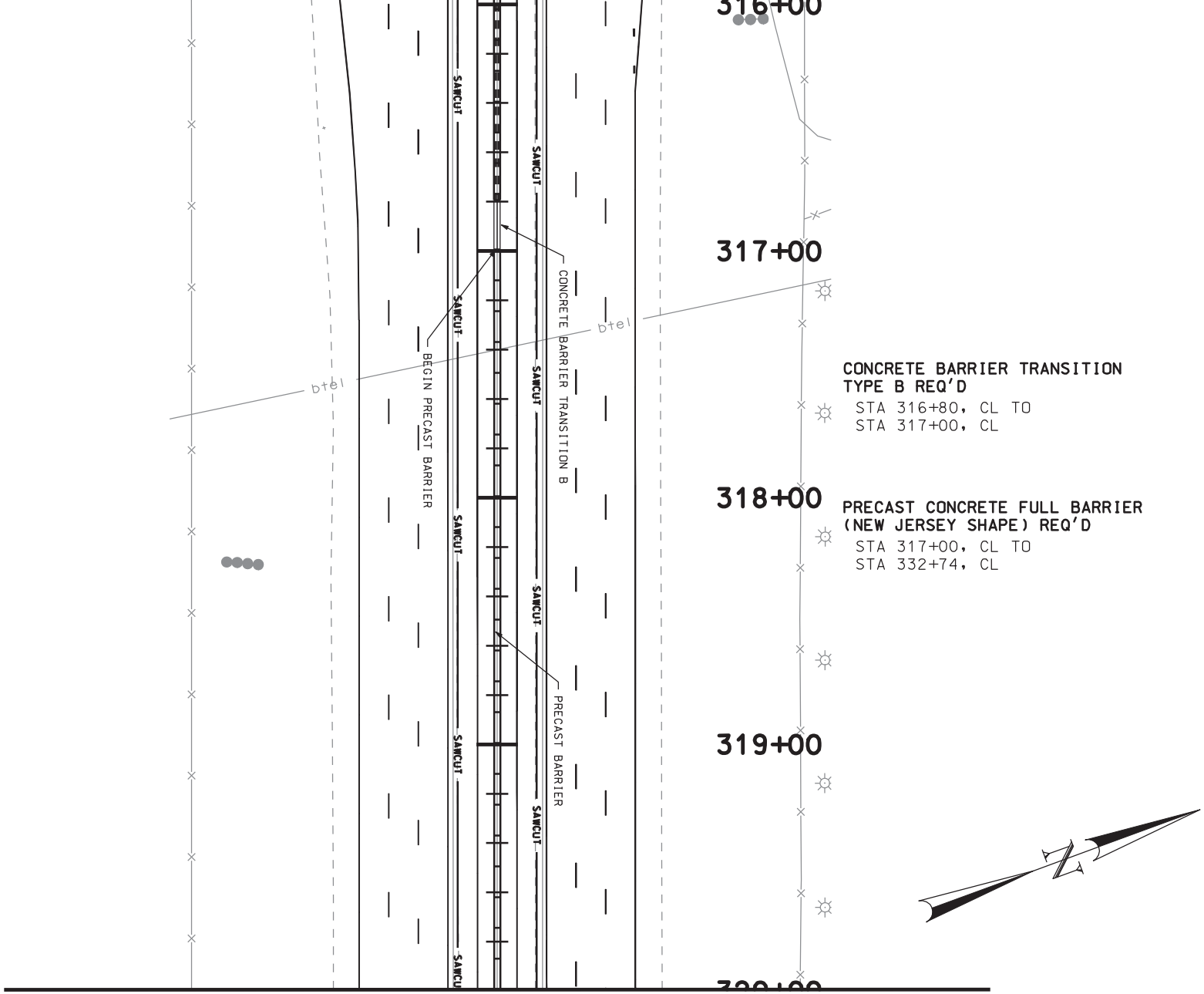


MATCH LINE STATION 320+00.000
SEE SHEET RD40

SHEET NO. RD-39

UTAH COUNTY

I-15; CORRIDOR
IN UTAH COUNTY
PLAN SHEET

PROJECT NUMBER SP-15-6(52)241

UTAH DEPARTMENT OF TRANSPORTATION
REGION THREE -- OREM CITY, UTAH
ROADWAY DESIGN

APPROVAL RECOMM. ____ DATE ____ PROJECT DESIGN ENGINEER
APPROVED FOR USE BY UDOT ____ DATE ____ PRECONSTRUCTION ENGINEER

| | | | |
|---|---|---|---|
| DESIGN JAH 02-05 | CHECK SMM 02-05 | REVIEW | |
| DRAWN JAH 02-05 | CHECK SMM 02-05 | DATE | |
| QUANT. JAH 02-05 | CHECK SMM 02-05 | BY | |

| NO. | DATE | DESIGN REV. BY | MAPS CORR. BY | PARCELS AFFECTED | REQUEST BY | REMARKS |
|---|---|---|---|---|---|---|
| | | ORIGINAL SUBMISSION FOR AUTHORIZATION | | | | |

DATE REVISIONS

SEE SHEET RD39
MATCH LINE STATION 320+00.000

**CATCH BASIN NO. 40A**
**CATCH BASIN, DETAIL DWG DT-7 REQ'D**
**(SEE SHEET DT-7)**
**RECTANGULAR GRATE AND FRAME**
**(STANDARD GRATING) STD DWG GF3 REQ'D (2).**

STA 320+70, CL
TOB EL=4510.227
EXIST EL=4505.30

**REMOVE CATCH BASIN REQ'D**

STA 320+70, CL

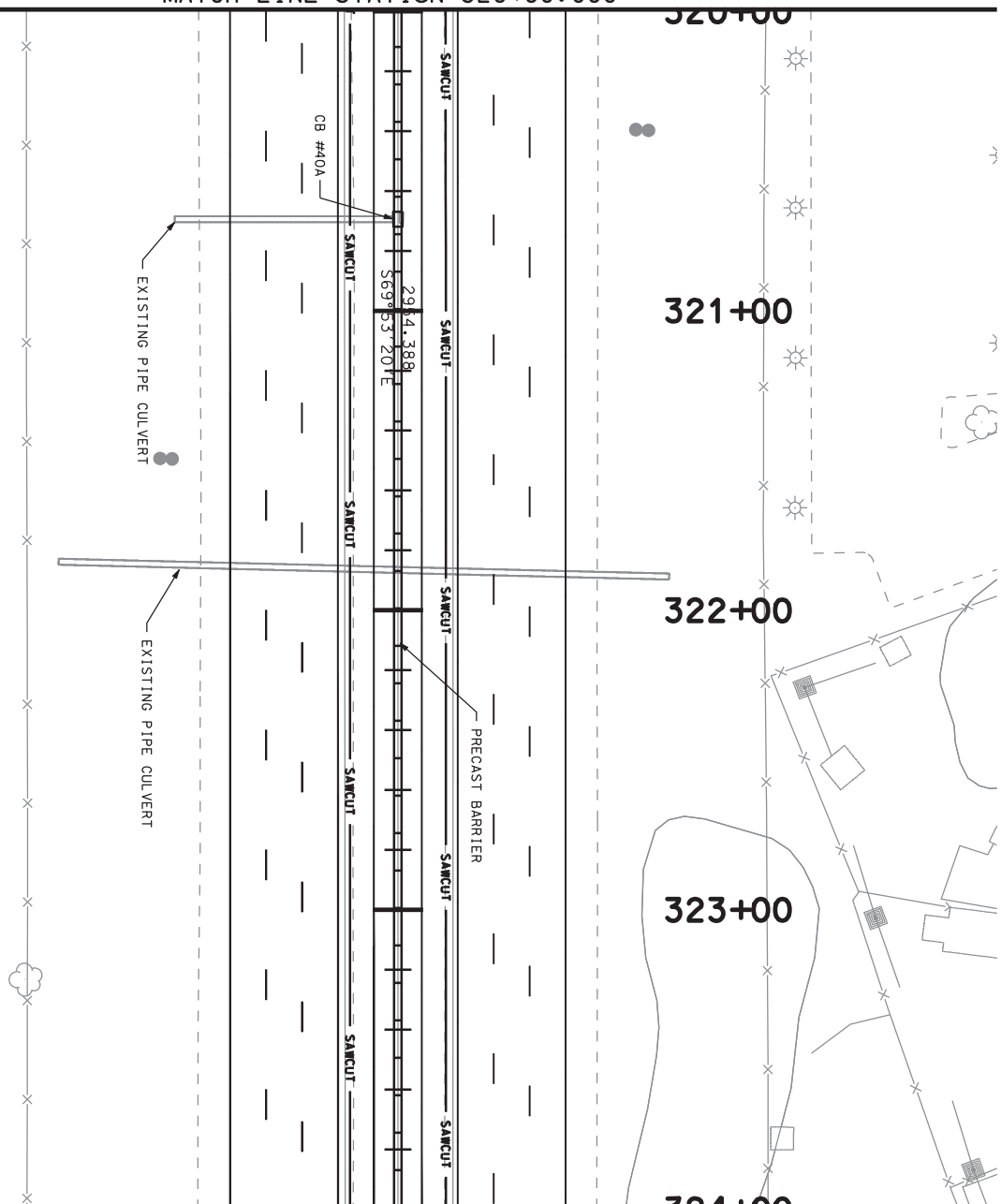

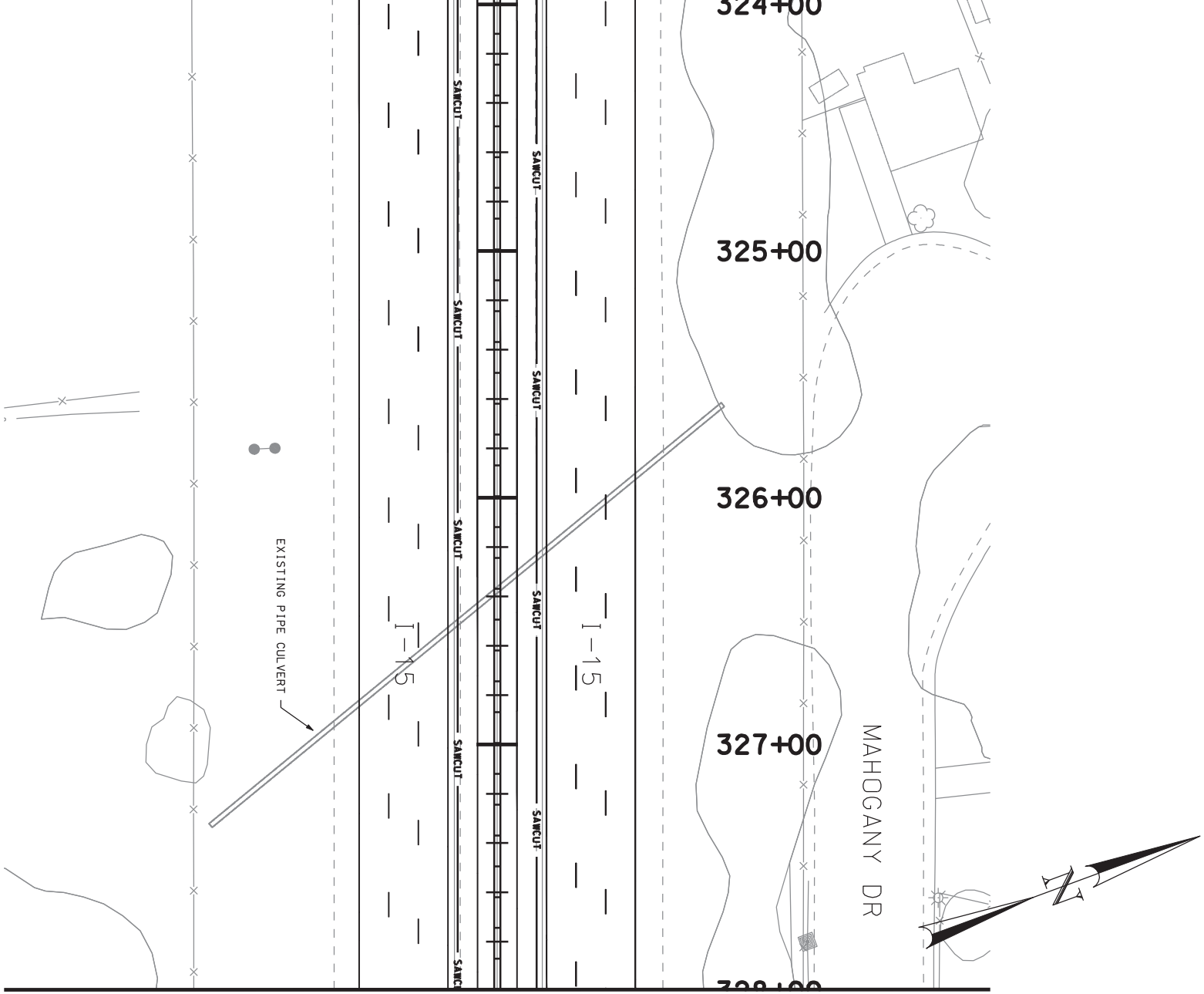


MATCH LINE STATION 328+00.000
SEE SHEET RD41

| | | | | | | |
|---|---|---|---|---|---|---|
| I-15; CORRIDOR | UTAH DEPARTMENT OF TRANSPORTATION | | | | | |
| IN UTAH COUNTY | REGION THREE -- OREM CITY, UTAH | | | | | |
| PLAN SHEET | ROADWAY DESIGN | | | | | |
| | APPROVAL RECOMM. ____ DATE ____ PROJECT DESIGN ENGINEER | DESIGN JAH 02-05 | CHECK SMM 02-05 | REVIEW | | |
| PROJECT NUMBER SP-15-6(52)241 | APPROVED FOR USE BY UDOT ____ DATE ____ PRECONSTRUCTION ENGINEER | DRAWN JAH 02-05 | CHECK SMM 02-05 | DATE ____ | | |
| | | QUANT. JAH 02-05 | CHECK SMM 02-05 | BY ____ | | |

| NO. | DATE | DESIGN REV. BY | MAPS CORR. BY | PARCELS AFFECTED | REQUEST BY | REMARKS |
|---|---|---|---|---|---|---|
| | | ORIGINAL SUBMISSION FOR AUTHORIZATION | | | | |
| | DATE | REVISIONS | | | | |

UTAH COUNTY

SHEET NO. RD-40

SEE SHEET RD40
MATCH LINE STATION 328+00.000

**REMOVE CRASH CUSHION REQ'D**
STA 329+10, RT

**REMOVE GUARDRAIL REQ'D**
STA 329+10, RT TO
STA 332+85, RT

**STORM SUMP REQ'D (NO. SS-41)**
**MANHOLE FRAME AND GRATED**
**COVER STD GF1 REQ'D**
**(SEE SHEET DT-6)**
STA 331+46, 2.0 RT
TOB ELEV = 4532.40

**12 INCH PIPE CULVERT, CLASS A REQ'D.**
STA 331+46, 2.0 LT TO
STA 331+46, 2.0 RT

**12 INCH PIPE CULVERT, CLASS A REQ'D**
STA 332+96, 2.1 RT TO
STA. 333+01, 2.0 LT

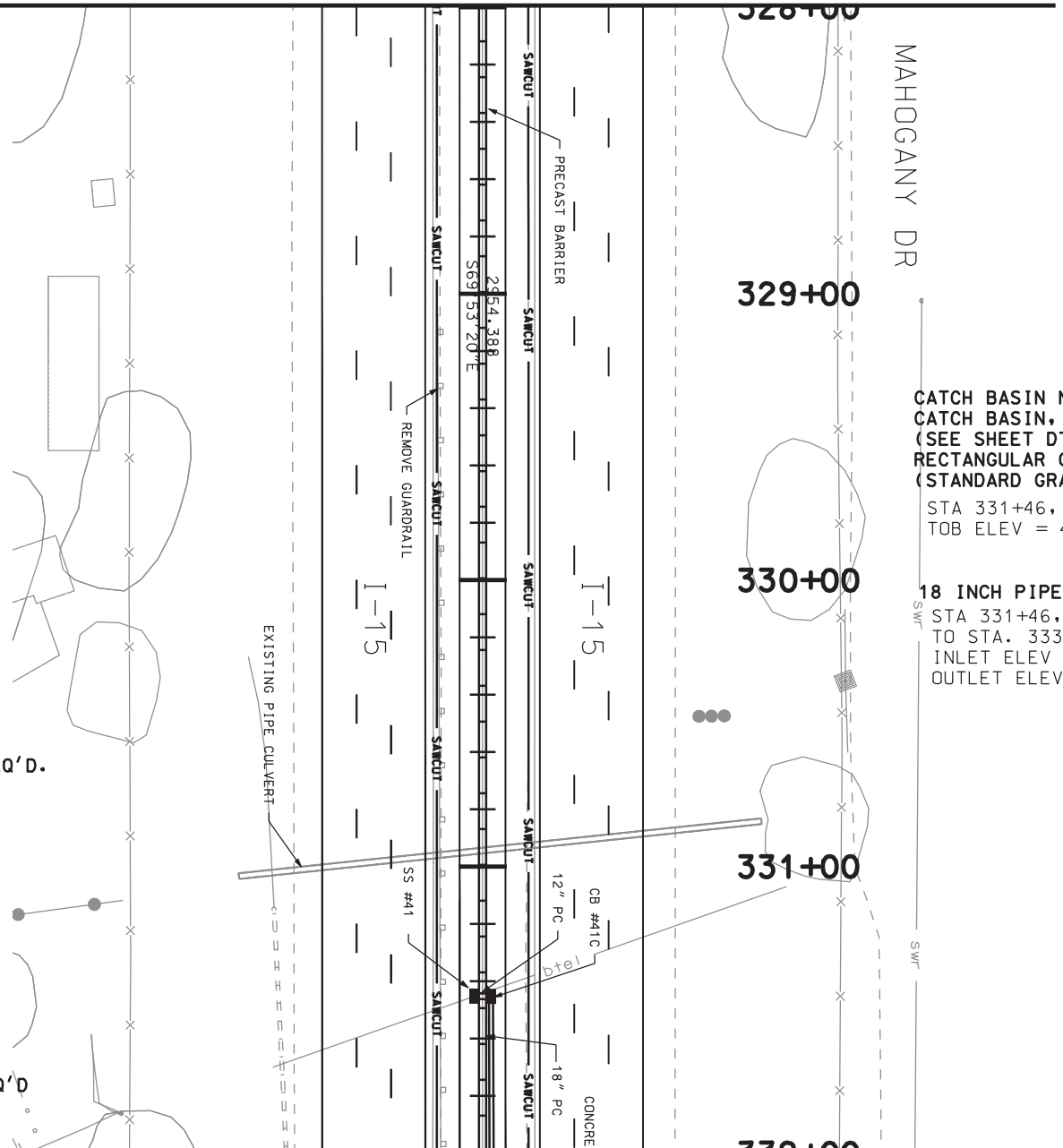


**CATCH BASIN NO. 41C**
**CATCH BASIN, STD DWG CB-10 REQ'D**
**(SEE SHEET DT-6)**
**RECTANGULAR GRATE AND FRAME**
**(STANDARD GRATING) STD DWG GF3 REQ'D.**
STA 331+46, 2.0 LT
TOB ELEV = 4532.40

**18 INCH PIPE CULVERT, CLASS A REQ'D**
STA 331+46, 2.0 LT
TO STA. 333+01, 3.5 LT
INLET ELEV = 4530.68
OUTLET ELEV = 4529.40

**REMOVE CABLE END SECTION REQ'D**
STA 332+95 CL
STA 334+75 CL

**CATCH BASIN NO. 41A**
**CATCH BASIN, STD DWG CB-10 REQ'D**
**(STD DWG CB-10)**
**RECTANGULAR GRATE AND FRAME**
**(STANDARD GRATING) STD DWG GF3 REQ'D.**
STA 334+72, 3.5 RT
COL A, LINE 1
TOB ELEV = 4534.20

**12 INCH PIPE CULVERT, CLASS A REQ'D**
STA 334+72, 3.5 RT
TO STA. 334+77, 3.5 LT

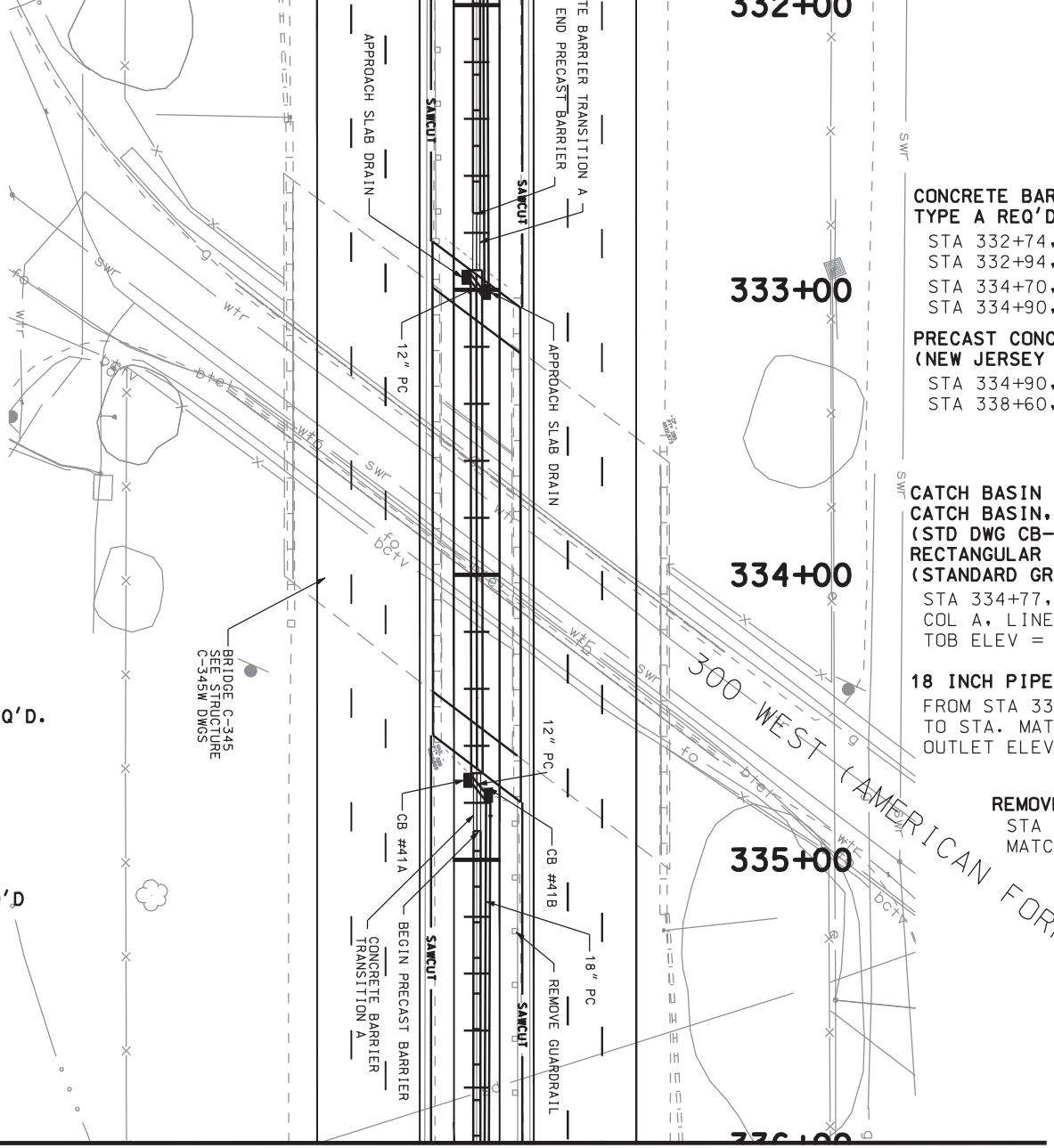


**CONCRETE BARRIER TRANSITION**
**TYPE A REQ'D**
STA 332+74, CL TO
STA 332+94, CL
STA 334+70, CL TO
STA 334+90, CL

**PRECAST CONCRETE FULL BARRIER**
**(NEW JERSEY SHAPE) REQ'D**
STA 334+90, CL TO
STA 338+60, CL

**CATCH BASIN NO. 41B**
**CATCH BASIN, STD DWG CB-10 REQ'D**
**(STD DWG CB-10)**
**RECTANGULAR GRATE AND FRAME**
**(STANDARD GRATING) STD DWG GF3 REQ'D.**
STA 334+77, 3.5 LT
COL A, LINE 1
TOB ELEV = 4534.04

**18 INCH PIPE CULVERT, CLASS A REQ'D**
FROM STA 334+77, 3.5 LT
TO STA. MATCH LINE STA 336+00
OUTLET ELEV = 4531.10

**REMOVE GUARDRAIL REQ'D**
STA 334+80, LT TO
MATCH LINE STA 336+00, LT

MATCH LINE STATION 336+00.000
SEE SHEET RD42

N

| | | | | | | |
|---|---|---|---|---|---|---|
| I-15; CORRIDOR | UTAH DEPARTMENT OF TRANSPORTATION | | | | | |
| IN UTAH COUNTY | REGION THREE -- OREM CITY, UTAH | | | | | |
| PLAN SHEET | ROADWAY DESIGN | | | | | |
| PROJECT NUMBER SP-15-6(52)241 | APPROVAL RECOMM. DATE / PROJECT DESIGN ENGINEER | DESIGN JAH 02-05 | CHECK SMM 02-05 | REVIEW | | |
| | APPROVED FOR USE BY UDOT DATE / PRECONSTRUCTION ENGINEER | DRAWN JAH 02-05 | CHECK SMM 02-05 | DATE | | |
| | | QUANT. JAH 02-05 | CHECK SMM 02-05 | BY | | |

| NO. | DATE | DESIGN REV. BY | MAPS CORR. BY | PARCELS AFFECTED | REQUEST BY | REMARKS |
|---|---|---|---|---|---|---|
| | | ORIGINAL SUBMISSION FOR AUTHORIZATION | | | | |
| DATE | | REVISIONS | | | | |

SHEET NO. RD-41
UTAH COUNTY

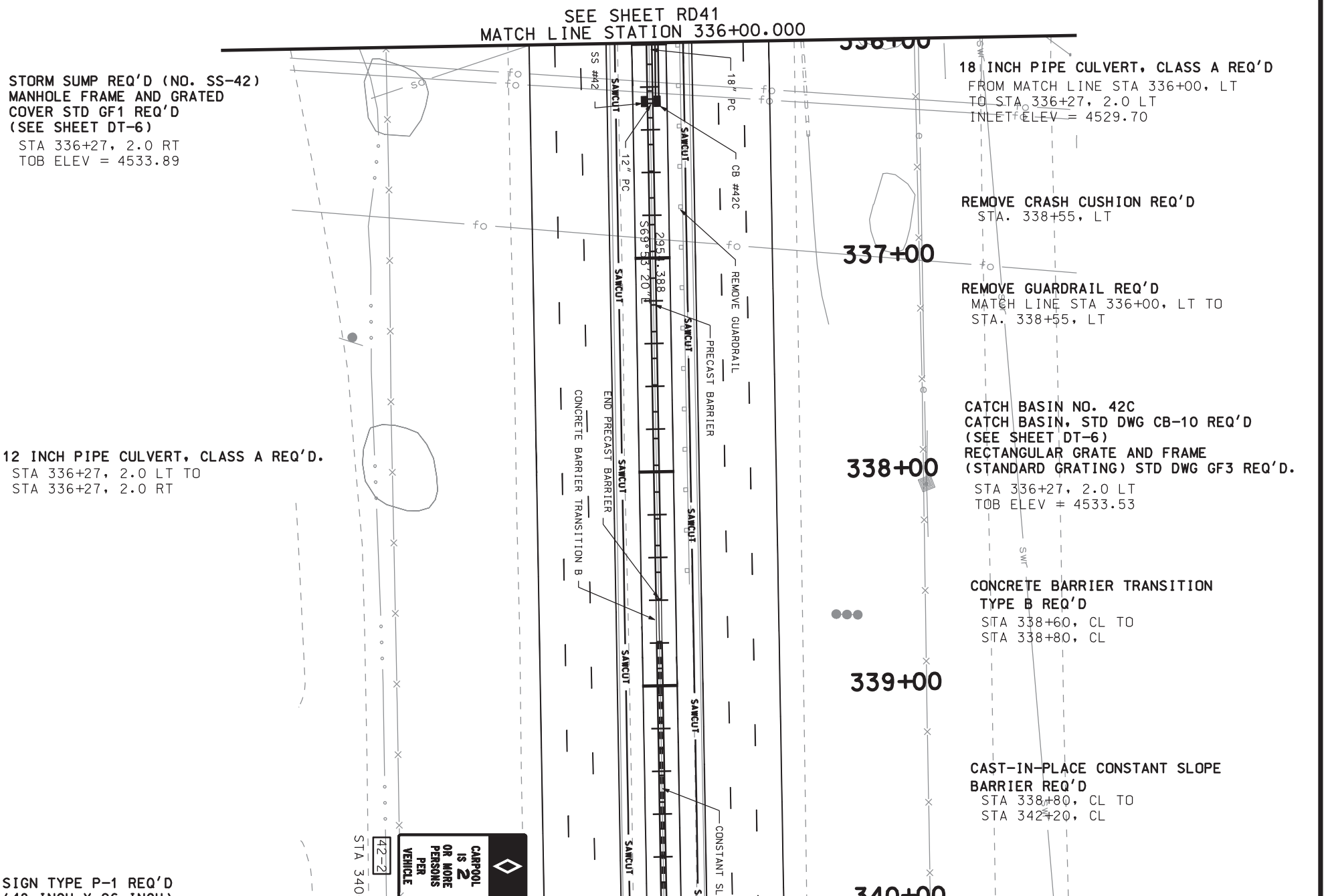
SEE SHEET RD41
MATCH LINE STATION 336+00.000
STORM SUMP REQ'D (NO. SS-42)
MANHOLE FRAME AND GRATED
COVER STD GF1 REQ'D
(SEE SHEET DT-6)
STA 336+27, 2.0 RT
TOB ELEV = 4533.89
12 INCH PIPE CULVERT, CLASS A REQ'D.
STA 336+27, 2.0 LT TO
STA 336+27, 2.0 RT
SIGN TYPE P-1 REQ'D
(42 INCH X 36 INCH)
STA 340+00, 2.0 LT
42-2
CARPOOL IS 2 OR MORE PERSONS PER VEHICLE
SS #42
12" PC
18" PC
CB #42C
REMOVE GUARDRAIL
PRECAST BARRIER
CONCRETE BARRIER TRANSITION B
END PRECAST BARRIER
CONSTANT SL
SAWCUT
S69°55'20"E
295.388 ft
336+00
337+00
338+00
339+00
340+00
18 INCH PIPE CULVERT, CLASS A REQ'D
FROM MATCH LINE STA 336+00, LT
TO STA 336+27, 2.0 LT
INLET ELEV = 4529.70
REMOVE CRASH CUSHION REQ'D
STA. 338+55, LT
REMOVE GUARDRAIL REQ'D
MATCH LINE STA 336+00, LT TO
STA. 338+55, LT
CATCH BASIN NO. 42C
CATCH BASIN, STD DWG CB-10 REQ'D
(SEE SHEET DT-6)
RECTANGULAR GRATE AND FRAME
(STANDARD GRATING) STD DWG GF3 REQ'D.
STA 336+27, 2.0 LT
TOB ELEV = 4533.53
CONCRETE BARRIER TRANSITION
TYPE B REQ'D
STA 338+60, CL TO
STA 338+80, CL
CAST-IN-PLACE CONSTANT SLOPE
BARRIER REQ'D
STA 338+80, CL TO
STA 342+20, CL

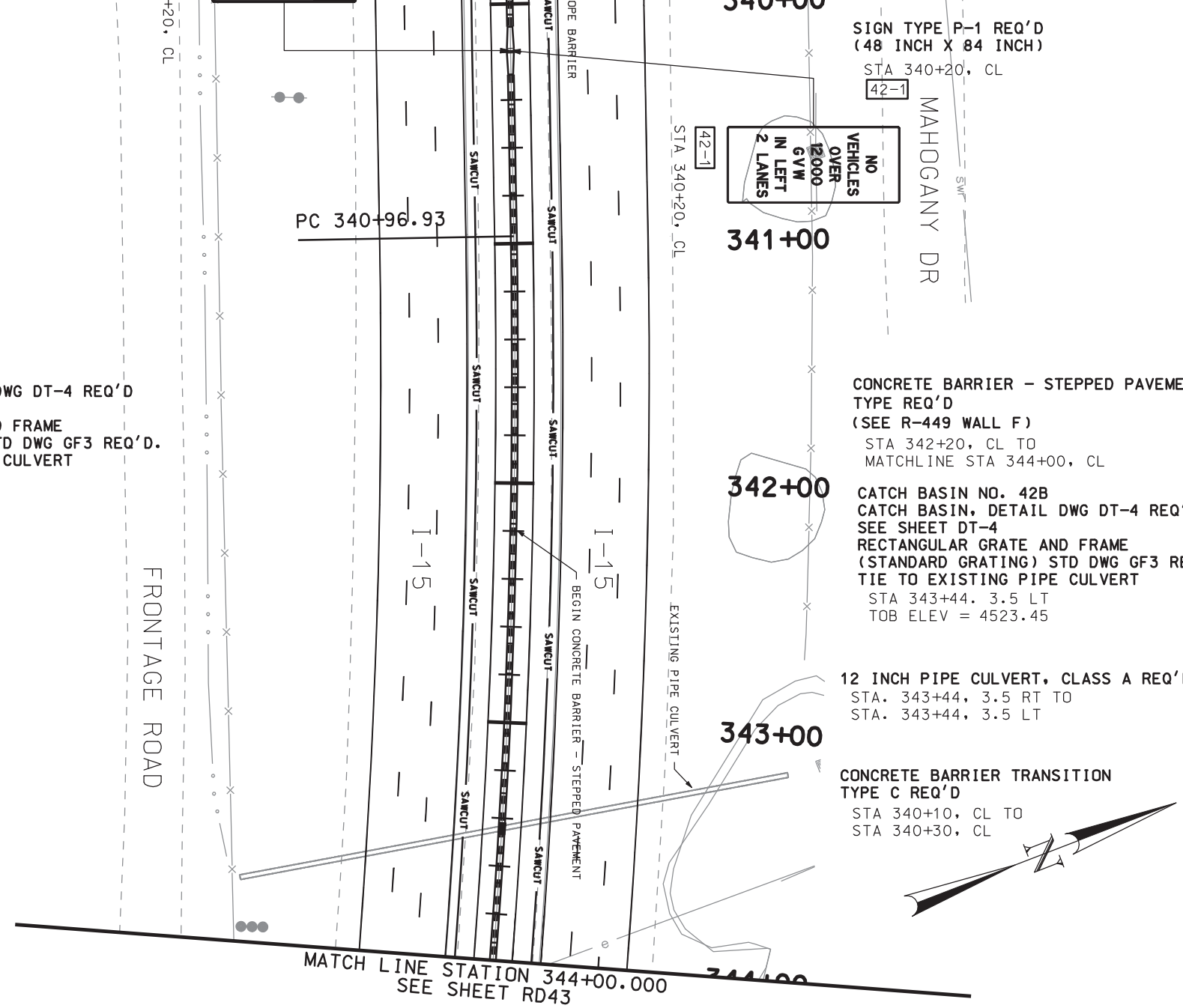


| | | | |
|---|---|---|---|
| I-15; CORRIDOR | UTAH DEPARTMENT OF TRANSPORTATION | | |
| IN UTAH COUNTY | REGION THREE -- OREM CITY, UTAH | | |
| PLAN SHEET | ROADWAY DESIGN | | |
| PROJECT NUMBER SP-15-6(52)241 | APPROVAL RECOMM. ____ DATE ____ PROJECT DESIGN ENGINEER | DESIGN JAH 02-05 | CHECK SMM 02-05 |
| | APPROVED FOR USE BY UDOT ____ DATE ____ PRECONSTRUCTION ENGINEER | DRAWN JAH 02-05 | CHECK SMM 02-05 |
| | | QUANT. JAH 02-05 | CHECK SMM 02-05 |

REVIEW
DATE ____
BY ____

| NO. | DATE | DESIGN REV. BY | MAPS CORR. BY | PARCELS AFFECTED | REQUEST BY | REMARKS |
|---|---|---|---|---|---|---|
| | | ORIGINAL SUBMISSION FOR AUTHORIZATION | | | | |

DATE REVISIONS

UTAH COUNTY

SHEET NO. RD-42

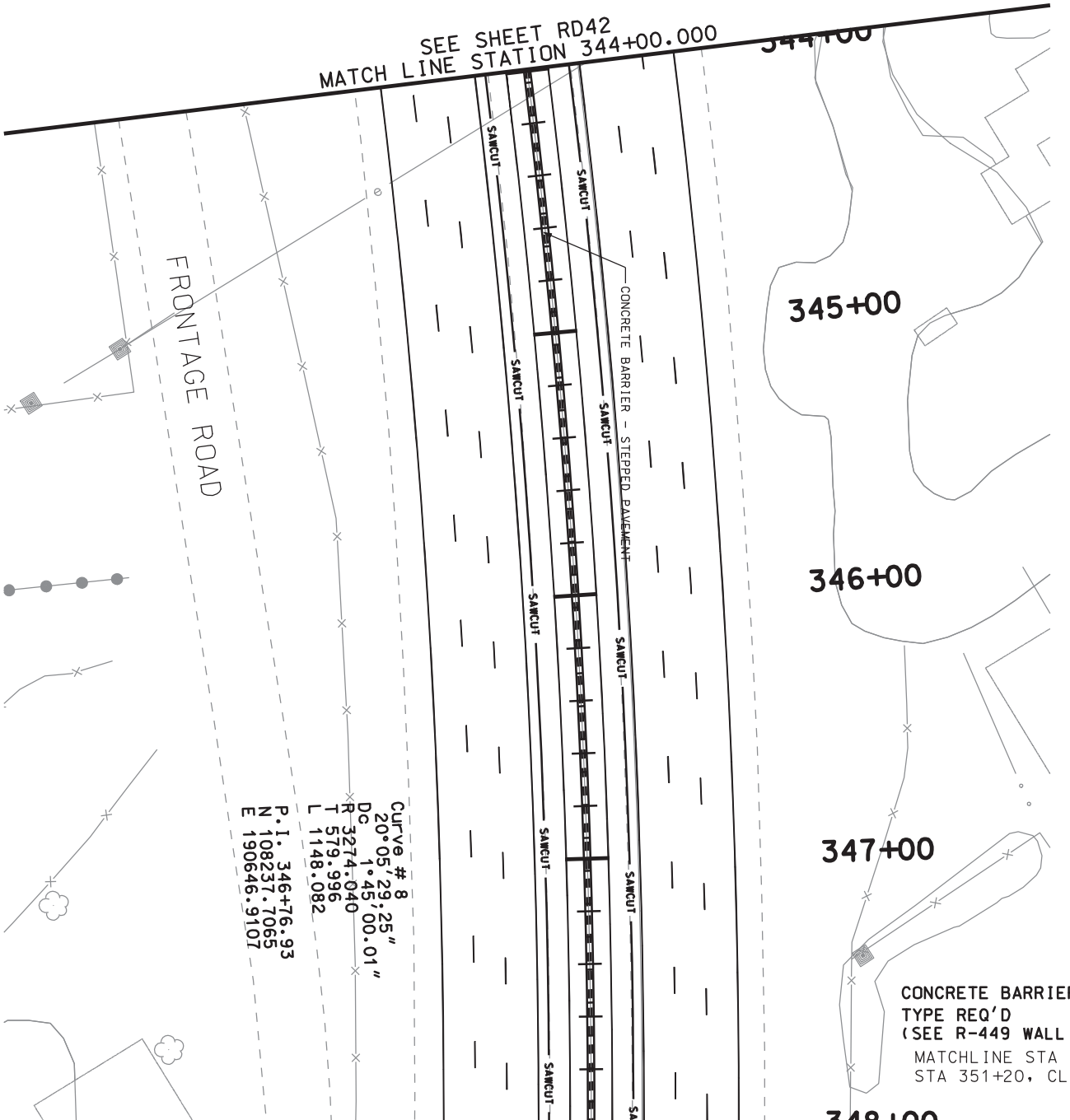
SEE SHEET RD42
MATCH LINE STATION 344+00.000
344+00
345+00
346+00
347+00
348+00
FRONTAGE ROAD
SAWCUT
CONCRETE BARRIER - STEPPED PAVEMENT
Curve # 8
20°05'29.25"
Dc 1°45'00.01"
R 3274.040
T 579.996
L 1148.082
P.I. 346+76.93
N 108237.7065
E 190646.9107
CONCRETE BARRIER - STEPPED PAVEMENT
TYPE REQ'D
(SEE R-449 WALL F)
MATCHLINE STA 344+00, CL TO
STA 351+20, CL

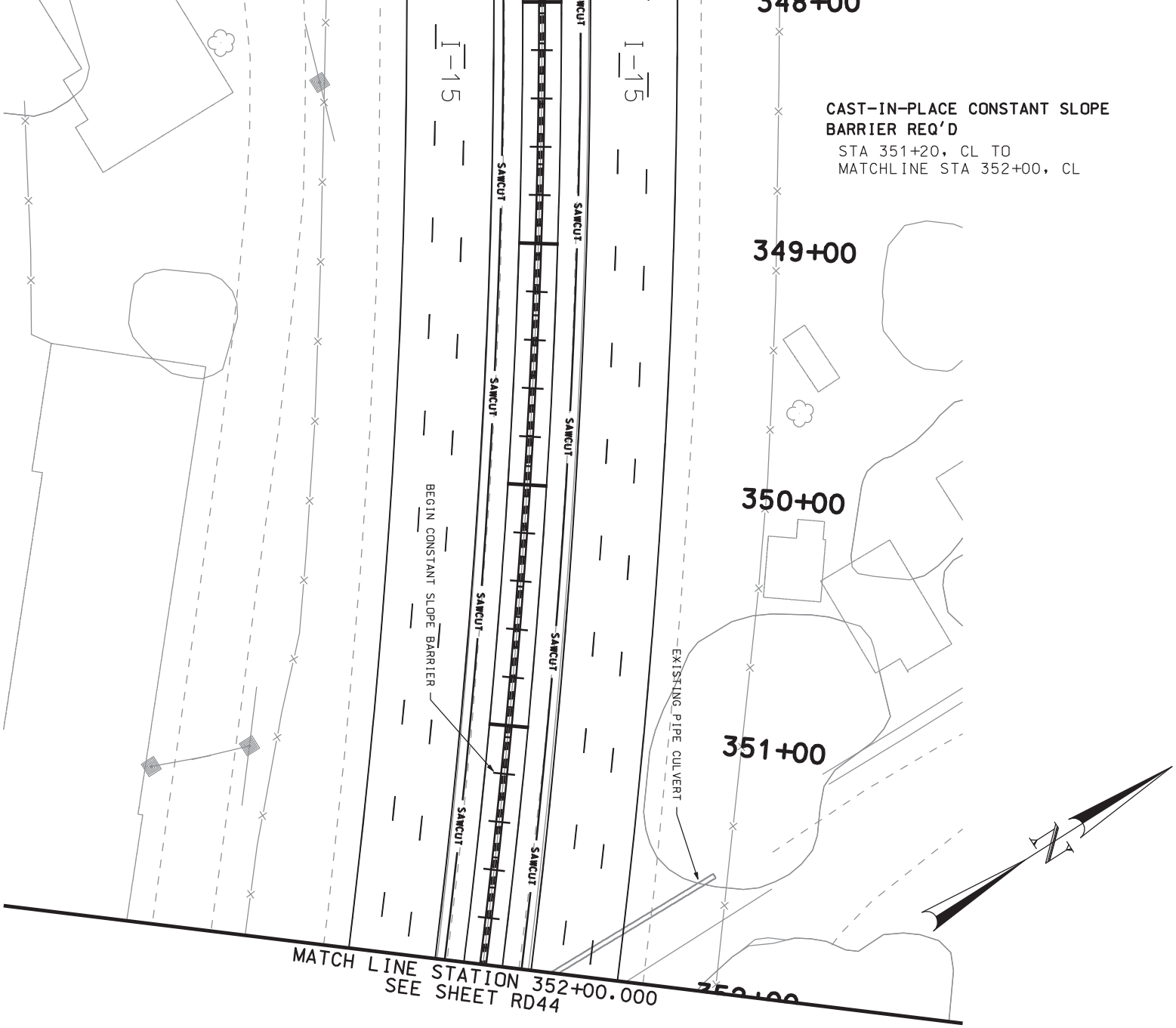


| | | | | | | |
|---|---|---|---|---|---|---|
| I-15; CORRIDOR | UTAH DEPARTMENT OF TRANSPORTATION | | | | | |
| IN UTAH COUNTY | REGION THREE -- OREM CITY, UTAH | | | | | |
| PLAN SHEET | ROADWAY DESIGN | | | | | |
| | APPROVAL RECOMM. DATE / PROJECT DESIGN ENGINEER | DESIGN JAH 02-05 | CHECK SMM 02-05 | REVIEW | | |
| PROJECT NUMBER SP-15-6(52)241 | APPROVED FOR USE BY UDOT DATE / PRECONSTRUCTION ENGINEER | DRAWN JAH 02-05 | CHECK SMM 02-05 | DATE | | |
| | | QUANT. JAH 02-05 | CHECK SMM 02-05 | BY | | |

| NO. | DATE | DESIGN REV. BY | MAPS CORR. BY | PARCELS AFFECTED | REQUEST BY | REMARKS |
|---|---|---|---|---|---|---|
| | | ORIGINAL SUBMISSION FOR AUTHORIZATION | | | | |
| | DATE | REVISIONS | | | | |

UTAH COUNTY

SHEET NO. RD-43

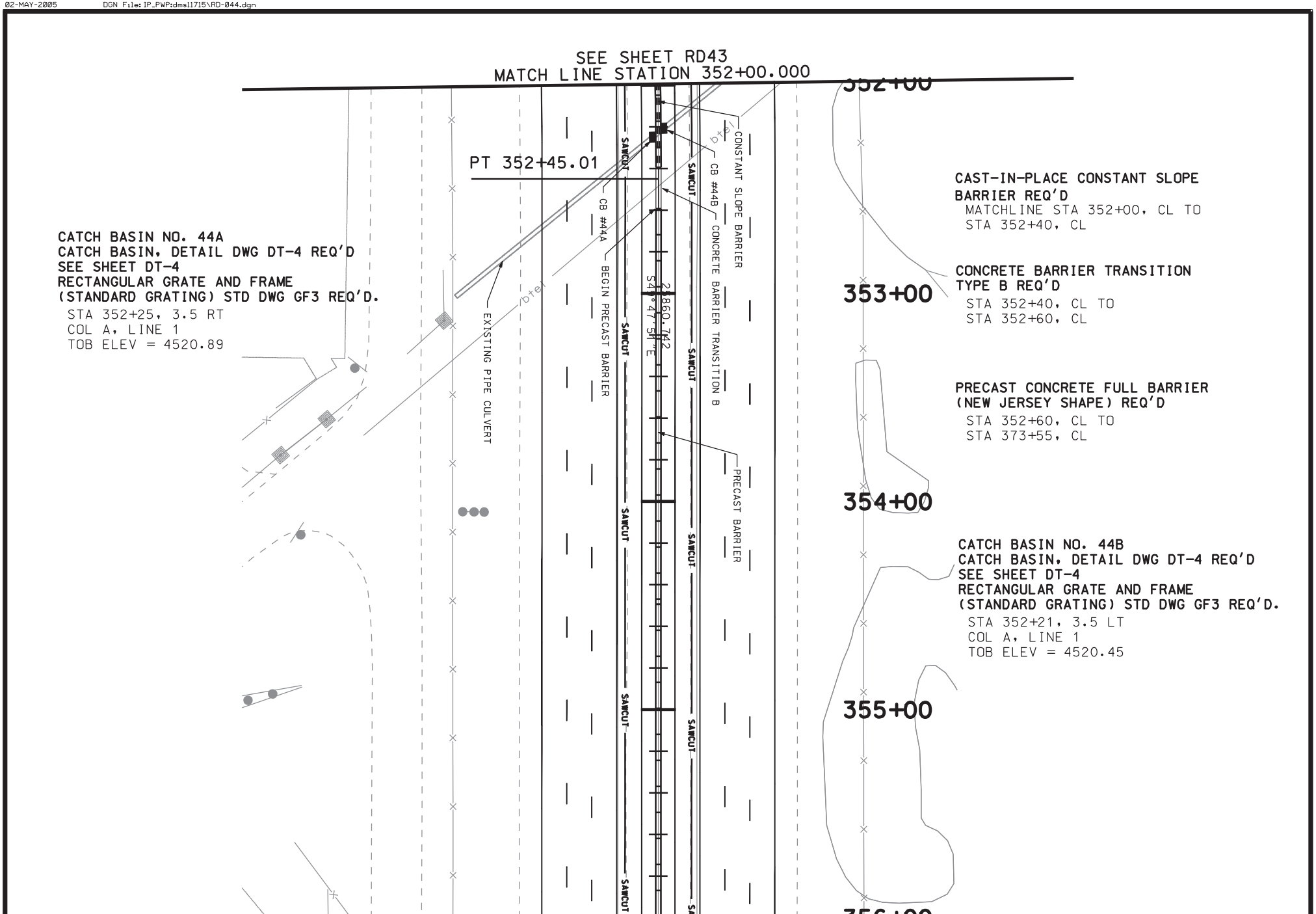
SEE SHEET RD43
MATCH LINE STATION 352+00.000
352+00
PT 352+45.01
CONSTANT SLOPE BARRIER
CB #44B
CONCRETE BARRIER TRANSITION B
CB #44A
BEGIN PRECAST BARRIER
EXISTING PIPE CULVERT
PRECAST BARRIER
SAWCUT
S49°47'51"E
21860.742
353+00
354+00
355+00
356+00
CAST-IN-PLACE CONSTANT SLOPE BARRIER REQ'D
MATCHLINE STA 352+00, CL TO STA 352+40, CL
CONCRETE BARRIER TRANSITION TYPE B REQ'D
STA 352+40, CL TO STA 352+60, CL
PRECAST CONCRETE FULL BARRIER (NEW JERSEY SHAPE) REQ'D
STA 352+60, CL TO STA 373+55, CL
CATCH BASIN NO. 44A
CATCH BASIN, DETAIL DWG DT-4 REQ'D
SEE SHEET DT-4
RECTANGULAR GRATE AND FRAME
(STANDARD GRATING) STD DWG GF3 REQ'D.
STA 352+25, 3.5 RT
COL A, LINE 1
TOB ELEV = 4520.89
CATCH BASIN NO. 44B
CATCH BASIN, DETAIL DWG DT-4 REQ'D
SEE SHEET DT-4
RECTANGULAR GRATE AND FRAME
(STANDARD GRATING) STD DWG GF3 REQ'D.
STA 352+21, 3.5 LT
COL A, LINE 1
TOB ELEV = 4520.45

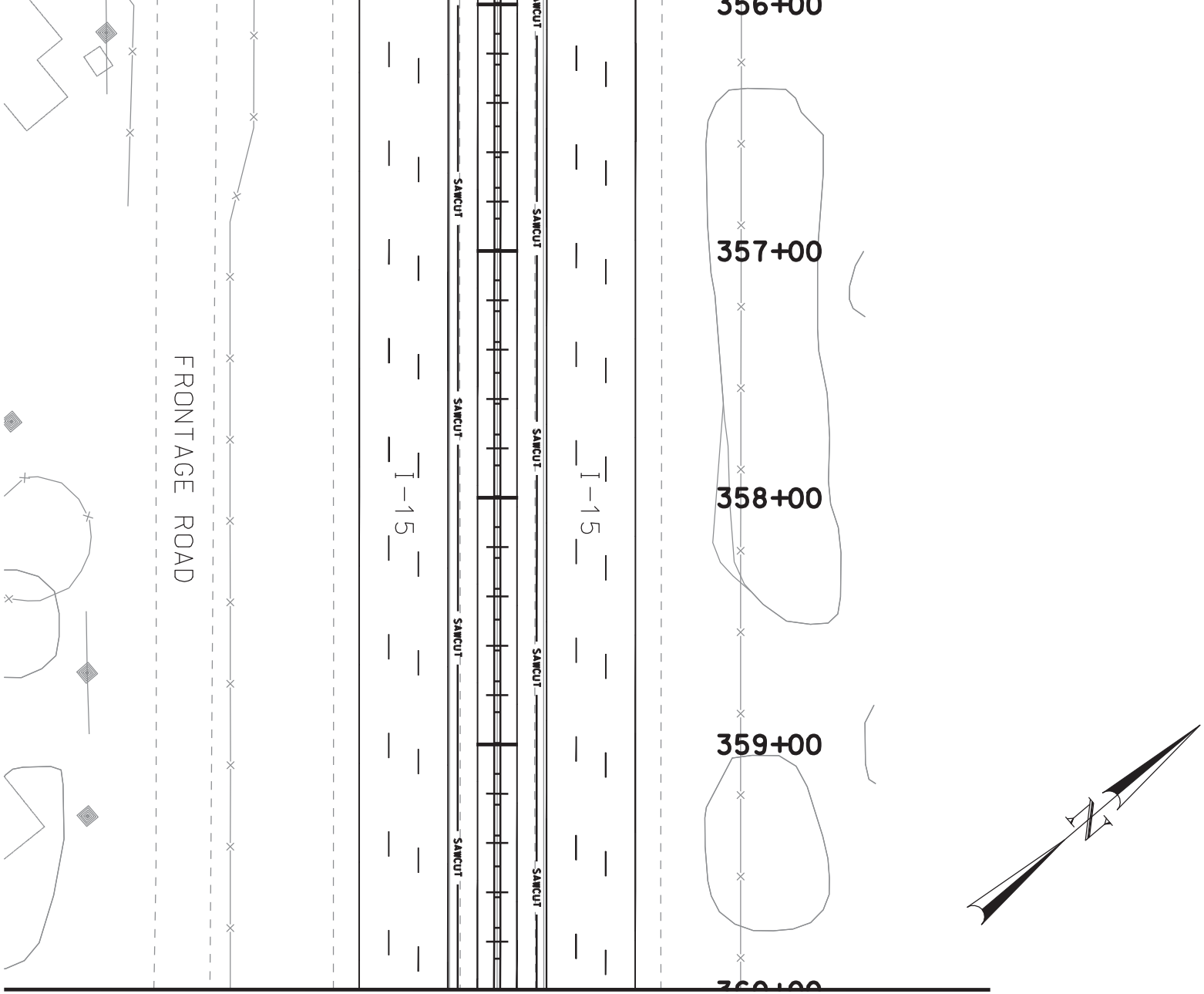


MATCH LINE STATION 360+00.000
SEE SHEET RD45

| | | | | | | |
|---|---|---|---|---|---|---|
| I-15; CORRIDOR | UTAH DEPARTMENT OF TRANSPORTATION | | | | | |
| IN UTAH COUNTY | REGION THREE -- OREM CITY, UTAH | | | | | |
| PLAN SHEET | ROADWAY DESIGN | | | | | |
| | APPROVAL RECOMM. ____ DATE ____ PROJECT DESIGN ENGINEER | DESIGN JAH 02-05 | CHECK SMM 02-05 | REVIEW | | |
| PROJECT NUMBER SP-15-6(52)241 | APPROVED FOR USE BY UDOT ____ DATE ____ PRECONSTRUCTION ENGINEER | DRAWN JAH 02-05 | CHECK SMM 02-05 | DATE ____ | | |
| | | QUANT. JAH 02-05 | CHECK SMM 02-05 | BY ____ | | |

| NO. | DATE | DESIGN REV. BY | MAPS CORR. BY | PARCELS AFFECTED | REQUEST BY | REMARKS |
|---|---|---|---|---|---|---|
| | | ORIGINAL SUBMISSION FOR AUTHORIZATION | | | | |
| | DATE | REVISIONS | | | | |

UTAH COUNTY

SHEET NO. RD-44

SEE SHEET RD44
MATCH LINE STATION 360+00.000

**CATCH BASIN NO. 45A**
**CATCH BASIN, DETAIL DWG DT-7 REQ'D**
**(SEE SHEET DT-7)**
**RECTANGULAR GRATE AND FRAME**
**(STANDARD GRATING) STD DWG GF3 REQ'D (2)**
STA 360+60, CL
COL A, LINE 1
TOB ELEV = 4517.82

**REMOVE CATCH BASIN REQ'D**
STA 360+60, CL

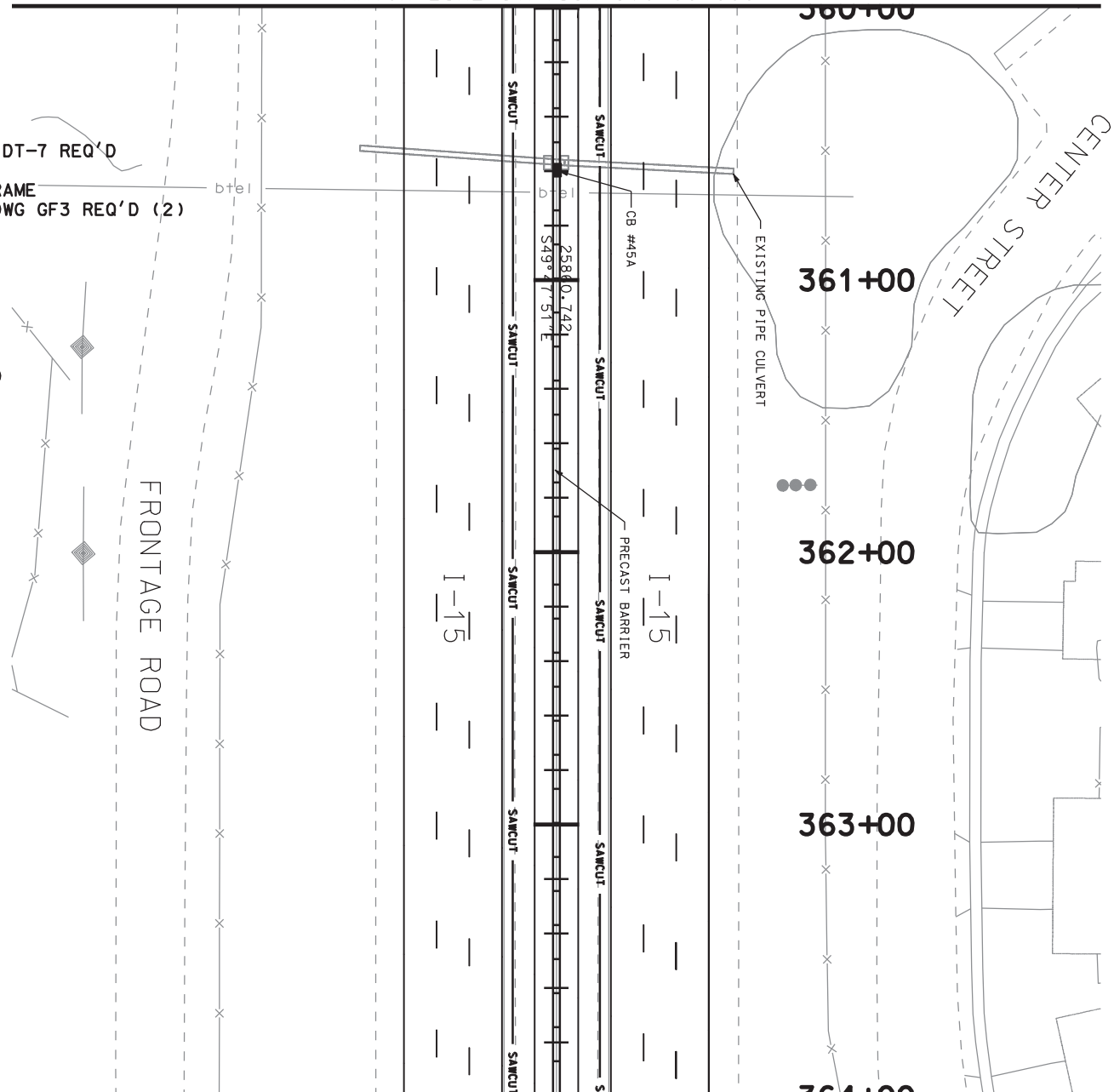

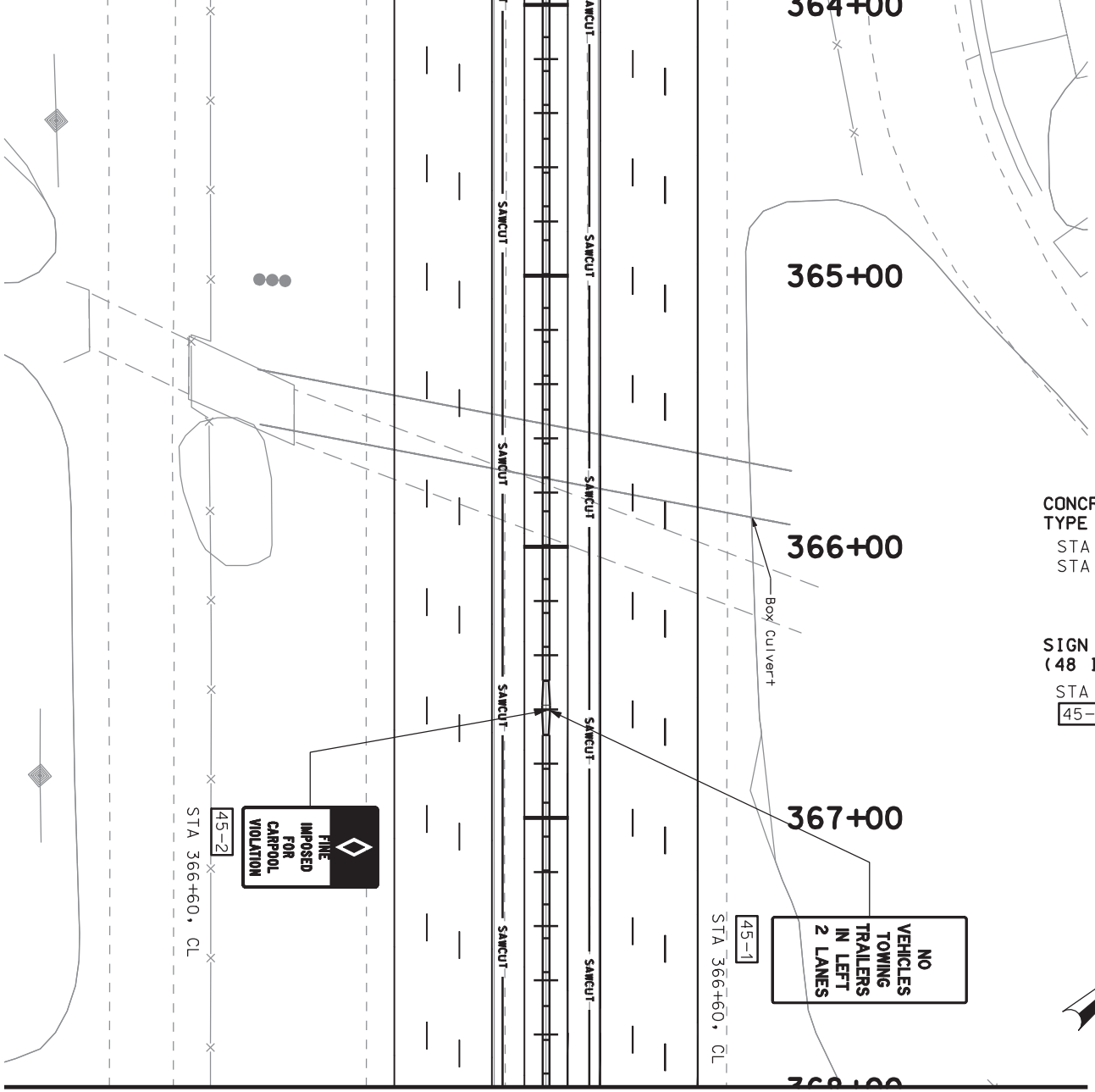


MATCH LINE STATION 368+00.000
SEE SHEET RD46

| | | | | | | |
|---|---|---|---|---|---|---|
| SHEET NO. RD-45 | UTAH COUNTY | I-15; CORRIDOR IN UTAH COUNTY | UTAH DEPARTMENT OF TRANSPORTATION<br>REGION THREE -- OREM CITY, UTAH<br>ROADWAY DESIGN | | | |
| | | PLAN SHEET | APPROVAL RECOMM. DATE / PROJECT DESIGN ENGINEER | DESIGN JAH 02-05 | CHECK SMM 02-05 | REVIEW |
| | | PROJECT NUMBER SP-15-6(52)241 | APPROVED FOR USE BY UDOT DATE / PRECONSTRUCTION ENGINEER | DRAWN JAH 02-05 | CHECK SMM 02-05 | DATE |
| | | | | QUANT. JAH 02-05 | CHECK SMM 02-05 | BY |

| NO. | DATE | DESIGN REV. BY | MAPS CORR. BY | PARCELS AFFECTED | REQUEST BY | REMARKS |
|---|---|---|---|---|---|---|
| | | ORIGINAL SUBMISSION FOR AUTHORIZATION | | | | |

DATE REVISIONS

SEE SHEET RD45
MATCH LINE STATION 368+00.000

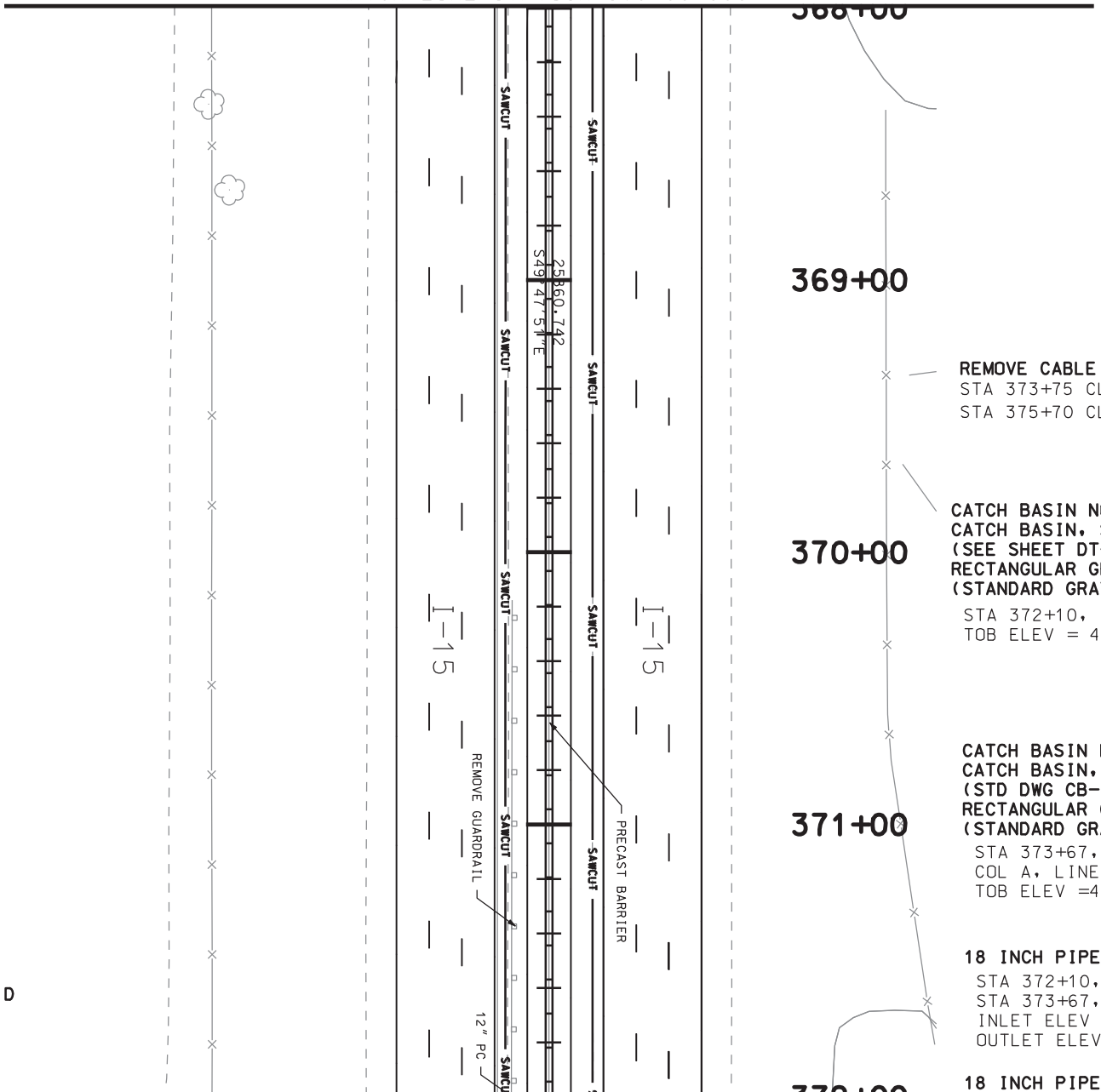


**REMOVE CABLE END SECTION REQ'D**
STA 373+75 CL
STA 375+70 CL

**CATCH BASIN NO. 46C**
**CATCH BASIN, STD DWG CB-10 REQ'D**
**(SEE SHEET DT-6)**
**RECTANGULAR GRATE AND FRAME**
**(STANDARD GRATING) STD DWG GF3 REQ'D.**
STA 372+10, 2.0 LT
TOB ELEV = 4528.91

**CATCH BASIN NO. 46B**
**CATCH BASIN, STD DWG CB-10 REQ'D**
**(STD DWG CB-10)**
**RECTANGULAR GRATE AND FRAME**
**(STANDARD GRATING) STD DWG GF3 REQ'D.**
STA 373+67, 2.4 LT
COL A, LINE 1
TOB ELEV =4529.05

**18 INCH PIPE CULVERT, CLASS A REQ'D**
STA 372+10, 2.0 LT TO
STA 373+67, 2.4 LT
INLET ELEV = 4525.80
OUTLET ELEV = 4525.05

**18 INCH PIPE CULVERT, CLASS A REQ'D**

**REMOVE GUARDRAIL REQ'D**
STA 370+10, RT TO
STA 373+85, RT

**REMOVE CRASH CUSHION REQ'D**
STA 370+10, RT

**CATCH BASIN NO. 46A**
**CATCH BASIN, STD DWG CB-10 REQ'D**
**(STD DWG CB-10)**
**RECTANGULAR GRATE AND FRAME**
**(STANDARD GRATING) STD DWG GF3 REQ'D.**
STA 373+72, 1.8 RT
COL A, LINE 1
TOB ELEV =4529.36

**STORM SUMP REQ'D (NO. SS-46)**
**MANHOLE FRAME AND GRATED**
**COVER STD GF1 REQ'D**
**(SEE SHEET DT-6)**
STA 372+10, 2.0 RT
TOB ELEV = 4528.91

**12 INCH PIPE CULVERT, CLASS A REQ'D.**
STA 372+10, 2.0 LT TO
STA 372+10, 2.0 RT

**12 INCH PIPE CULVERT, CLASS A REQ'D**
FROM STA 373+72, 1.8 RT
TO STA 373+67, 2.4 LT

**12 INCH PIPE CULVERT, CLASS A REQ'D**
FROM STA 375+66, 3.5 RT
TO STA 375+60, 3.5 LT

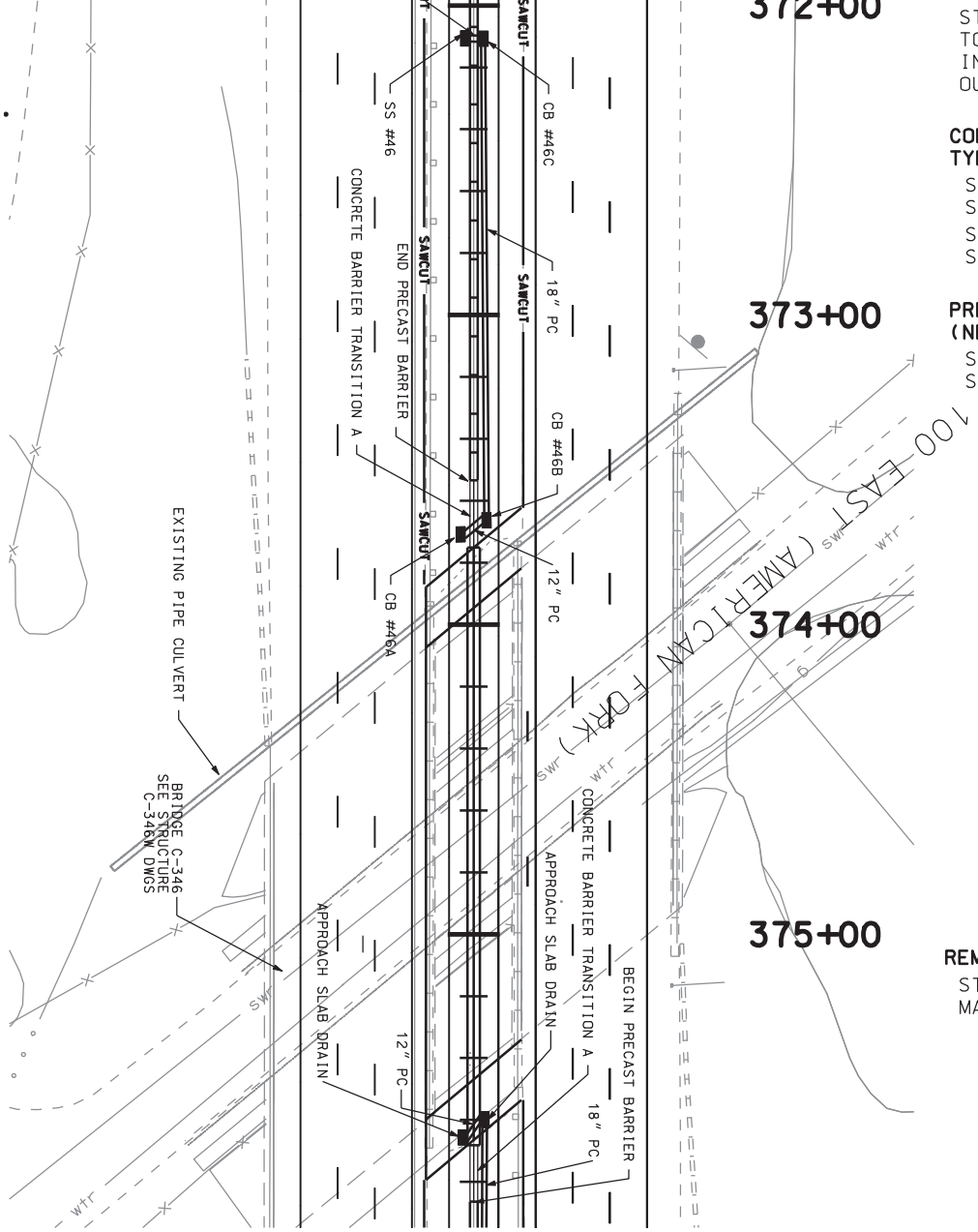


STA 375+60, 3.5 LT
TO MATCH LINE STA 376+00,
INLET ELEV = 4524.2
OUTLET ELEV = 4522.6

**CONCRETE BARRIER TRANSITION**
**TYPE A REQ'D**
STA 373+55, CL TO
STA 373+75, CL
STA 375+69, CL TO
STA 375+89, CL

**PRECAST CONCRETE FULL BARRIER**
**(NEW JERSEY SHAPE) REQ'D**
STA 375+89, CL TO
STA 410+40, 3.5 RT

**REMOVE GUARDRAIL REQ'D**
STA 375+55, LT TO
MATCH LINE STA 376+00,

MATCH LINE STATION 376+00.000
SEE SHEET RD47

| | | | | | |
|---|---|---|---|---|---|
| I-15; CORRIDOR | UTAH DEPARTMENT OF TRANSPORTATION | | | | |
| IN UTAH COUNTY | REGION THREE -- OREM CITY, UTAH | | | | |
| PLAN SHEET | ROADWAY DESIGN | | | | |
| | APPROVAL RECOMM. DATE / PROJECT DESIGN ENGINEER | DESIGN JAH 02-05 | CHECK SMM 02-05 | REVIEW | |
| | APPROVED FOR USE BY UDOT DATE / PRECONSTRUCTION ENGINEER | DRAWN JAH 02-05 | CHECK SMM 02-05 | DATE | |
| PROJECT NUMBER SP-15-6(52)241 | | QUANT. JAH 02-05 | CHECK SMM 02-05 | BY | |

| NO. | DATE | DESIGN REV. BY | MAPS CORR. BY | PARCELS AFFECTED | REQUEST BY | REMARKS |
|---|---|---|---|---|---|---|
| | | ORIGINAL SUBMISSION FOR AUTHORIZATION | | | | |
| DATE | | REVISIONS | | | | |

SHEET NO. RD-46
UTAH COUNTY

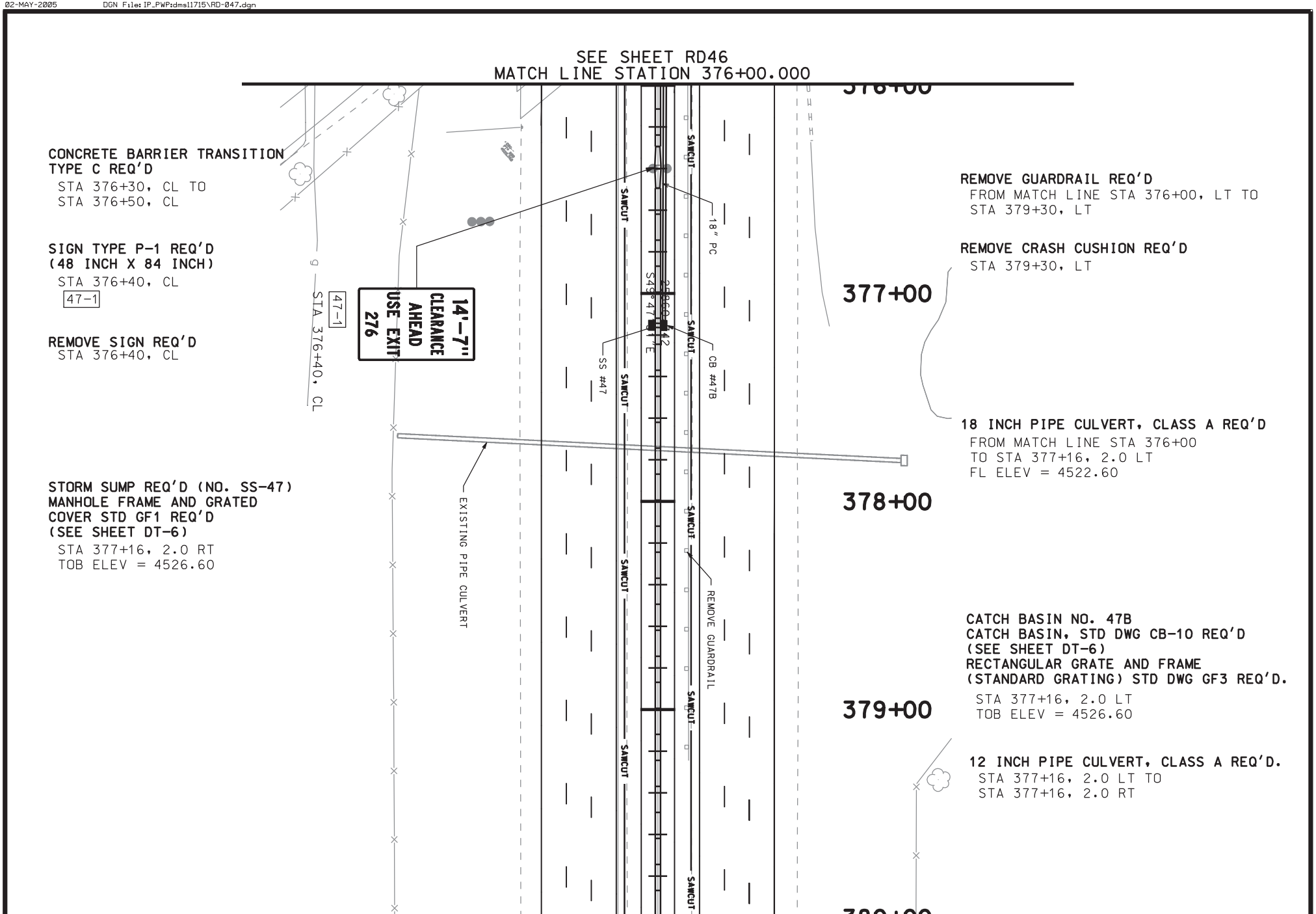
SEE SHEET RD46
MATCH LINE STATION 376+00.000
376+00
377+00
378+00
379+00
380+00
CONCRETE BARRIER TRANSITION
TYPE C REQ'D
STA 376+30, CL TO
STA 376+50, CL
SIGN TYPE P-1 REQ'D
(48 INCH X 84 INCH)
STA 376+40, CL
47-1
REMOVE SIGN REQ'D
STA 376+40, CL
STA 376+40, CL
47-1
14'-7"
CLEARANCE
AHEAD
USE EXIT
276
STORM SUMP REQ'D (NO. SS-47)
MANHOLE FRAME AND GRATED
COVER STD GF1 REQ'D
(SEE SHEET DT-6)
STA 377+16, 2.0 RT
TOB ELEV = 4526.60
EXISTING PIPE CULVERT
SAWCUT
18" PC
SS #47
CB #47B
REMOVE GUARDRAIL
REMOVE GUARDRAIL REQ'D
FROM MATCH LINE STA 376+00, LT TO
STA 379+30, LT
REMOVE CRASH CUSHION REQ'D
STA 379+30, LT
18 INCH PIPE CULVERT, CLASS A REQ'D
FROM MATCH LINE STA 376+00
TO STA 377+16, 2.0 LT
FL ELEV = 4522.60
CATCH BASIN NO. 47B
CATCH BASIN, STD DWG CB-10 REQ'D
(SEE SHEET DT-6)
RECTANGULAR GRATE AND FRAME
(STANDARD GRATING) STD DWG GF3 REQ'D.
STA 377+16, 2.0 LT
TOB ELEV = 4526.60
12 INCH PIPE CULVERT, CLASS A REQ'D.
STA 377+16, 2.0 LT TO
STA 377+16, 2.0 RT

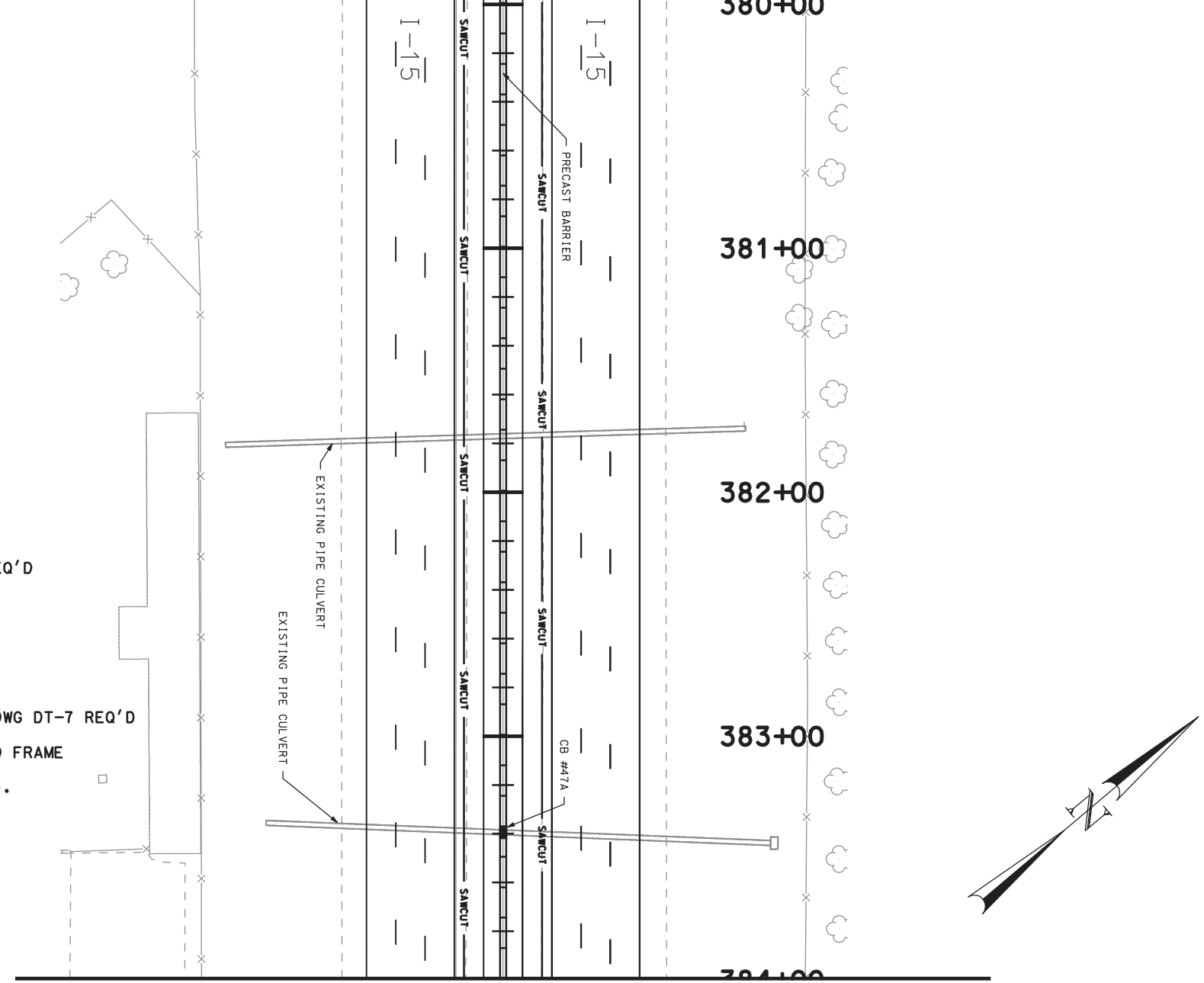


REMOVE CATCH BASIN REQ'D
STA 383+40, CL

CATCH BASIN NO. 47A
CATCH BASIN, DETAIL DWG DT-7 REQ'D
(SEE SHEET DT-7)
RECTANGULAR GRATE AND FRAME
(STANDARD GRATING)
STD DWG GF3 REQ'D (2).
STA 383+40, CL
TOB ELEV =4512.78

MATCH LINE STATION 384+00.000
SEE SHEET RD48

| | | | | | |
|---|---|---|---|---|---|
| I-15; CORRIDOR | UTAH DEPARTMENT OF TRANSPORTATION | | | | |
| IN UTAH COUNTY | REGION THREE -- OREM CITY, UTAH | | | | |
| PLAN SHEET | ROADWAY DESIGN | | | | |
| | APPROVAL RECOMM. DATE / PROJECT DESIGN ENGINEER | DESIGN JAH 02-05 | CHECK SMM 02-05 | REVIEW | |
| | APPROVED FOR USE BY UDOT DATE / PRECONSTRUCTION ENGINEER | DRAWN JAH 02-05 | CHECK SMM 02-05 | DATE | |
| PROJECT NUMBER SP-15-6(52)241 | | QUANT. JAH 02-05 | CHECK SMM 02-05 | BY | |

| NO. | DATE | DESIGN REV. BY | MAPS CORR. BY | PARCELS AFFECTED | REQUEST BY | REMARKS |
|---|---|---|---|---|---|---|
| | | ORIGINAL SUBMISSION FOR AUTHORIZATION | | | | |
| | DATE | REVISIONS | | | | |

UTAH COUNTY

SHEET NO. RD-47

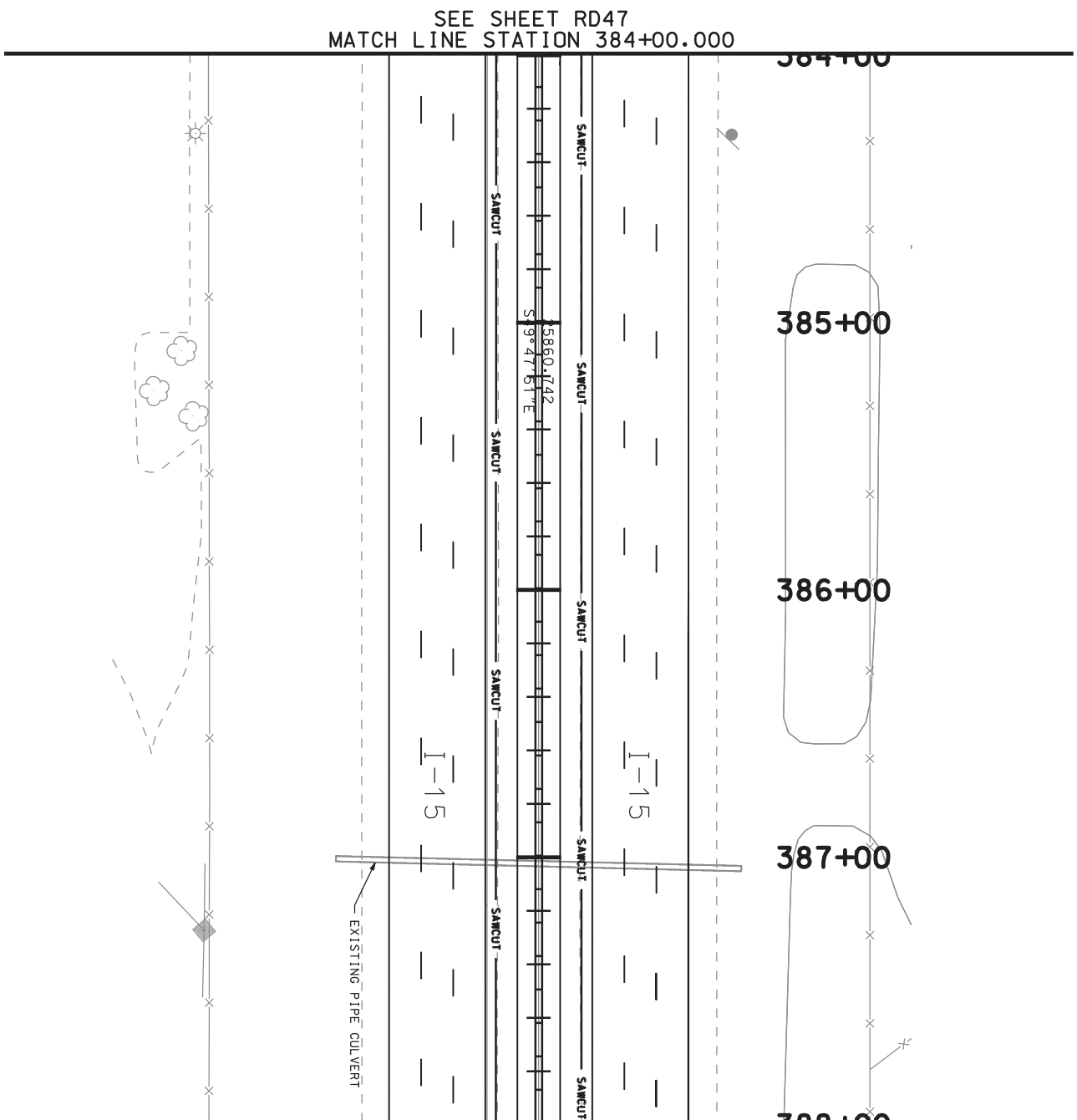
SEE SHEET RD47
MATCH LINE STATION 384+00.000
384+00
385+00
386+00
387+00
388+00
SAWCUT
SAWCUT
SAWCUT
SAWCUT
SAWCUT
SAWCUT
SAWCUT
SAWCUT
I-15
I-15
S19°47'51"E
15860.742
EXISTING PIPE CULVERT

STORM SUMP REQ'D (NO. SS-48)
MANHOLE FRAME AND GRATED
COVER STD GF1 REQ'D
(SEE SHEET DT-6)
STA 390+00, 2.0 RT
TOB ELEV = 4506.59

12 INCH PIPE CULVERT, CLASS A REQ'D.
STA 390+00, 2.0 LT TO
STA 390+00, 2.0 RT

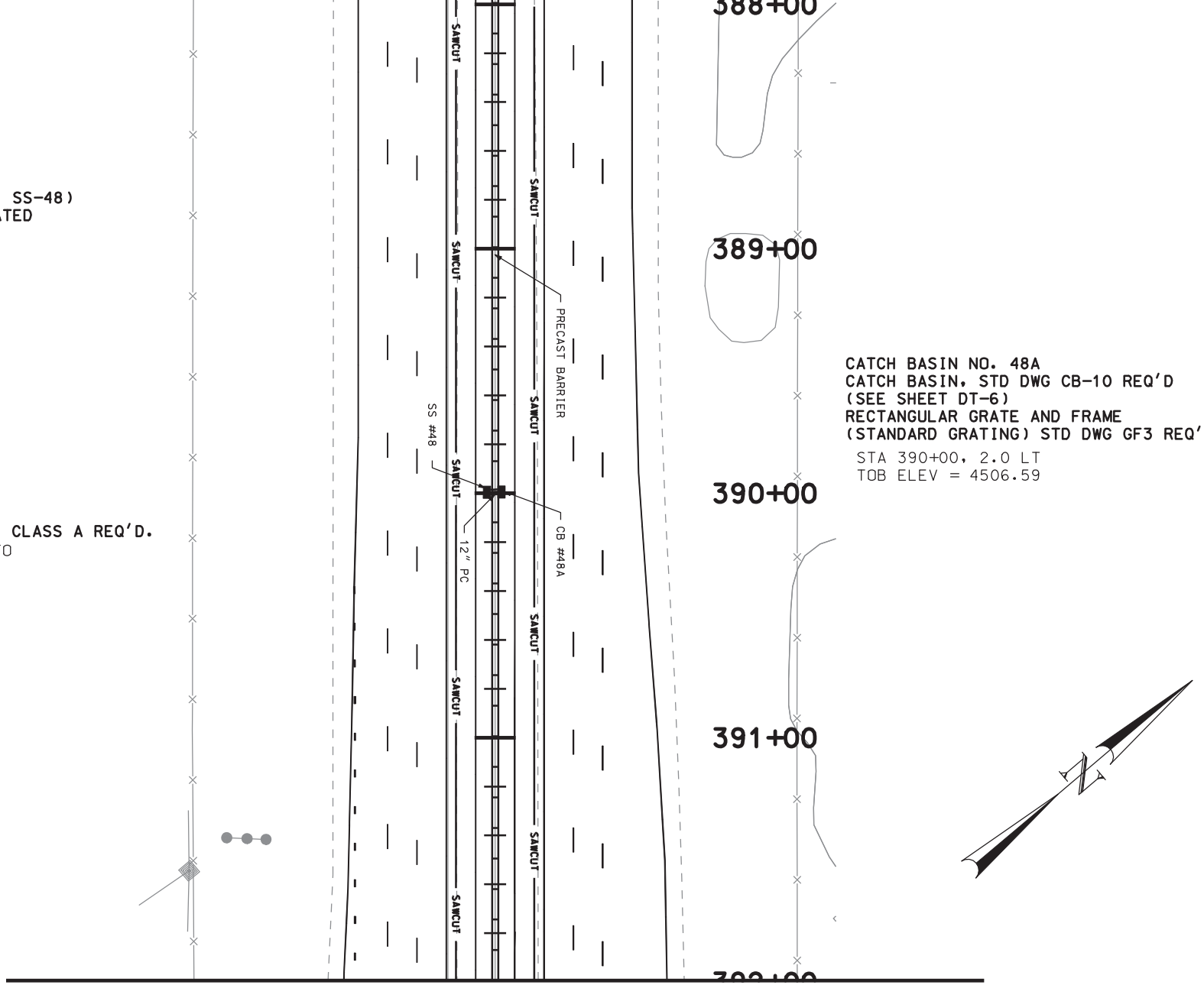


CATCH BASIN NO. 48A
CATCH BASIN, STD DWG CB-10 REQ'D
(SEE SHEET DT-6)
RECTANGULAR GRATE AND FRAME
(STANDARD GRATING) STD DWG GF3 REQ'D.
STA 390+00, 2.0 LT
TOB ELEV = 4506.59

MATCH LINE STATION 392+00.000
SEE SHEET RD49

SHEET NO. RD-48

UTAH COUNTY

I-15; CORRIDOR
IN UTAH COUNTY
PLAN SHEET

PROJECT NUMBER SP-15-6(52)241

UTAH DEPARTMENT OF TRANSPORTATION
REGION THREE -- OREM CITY, UTAH
ROADWAY DESIGN

APPROVAL RECOMM. ____ DATE ____ PROJECT DESIGN ENGINEER
APPROVED FOR USE BY UDOT ____ DATE ____ PRECONSTRUCTION ENGINEER

DESIGN JAH 02-05 CHECK SMM 02-05 REVIEW
DRAWN JAH 02-05 CHECK SMM 02-05 DATE ____
QUANT. JAH 02-05 CHECK SMM 02-05 BY ____

| NO. | DATE | DESIGN REV. BY | MAPS CORR. BY | PARCELS AFFECTED | REQUEST BY | REMARKS |
|---|---|---|---|---|---|---|
| | | ORIGINAL SUBMISSION FOR AUTHORIZATION | | | | |

DATE REVISIONS

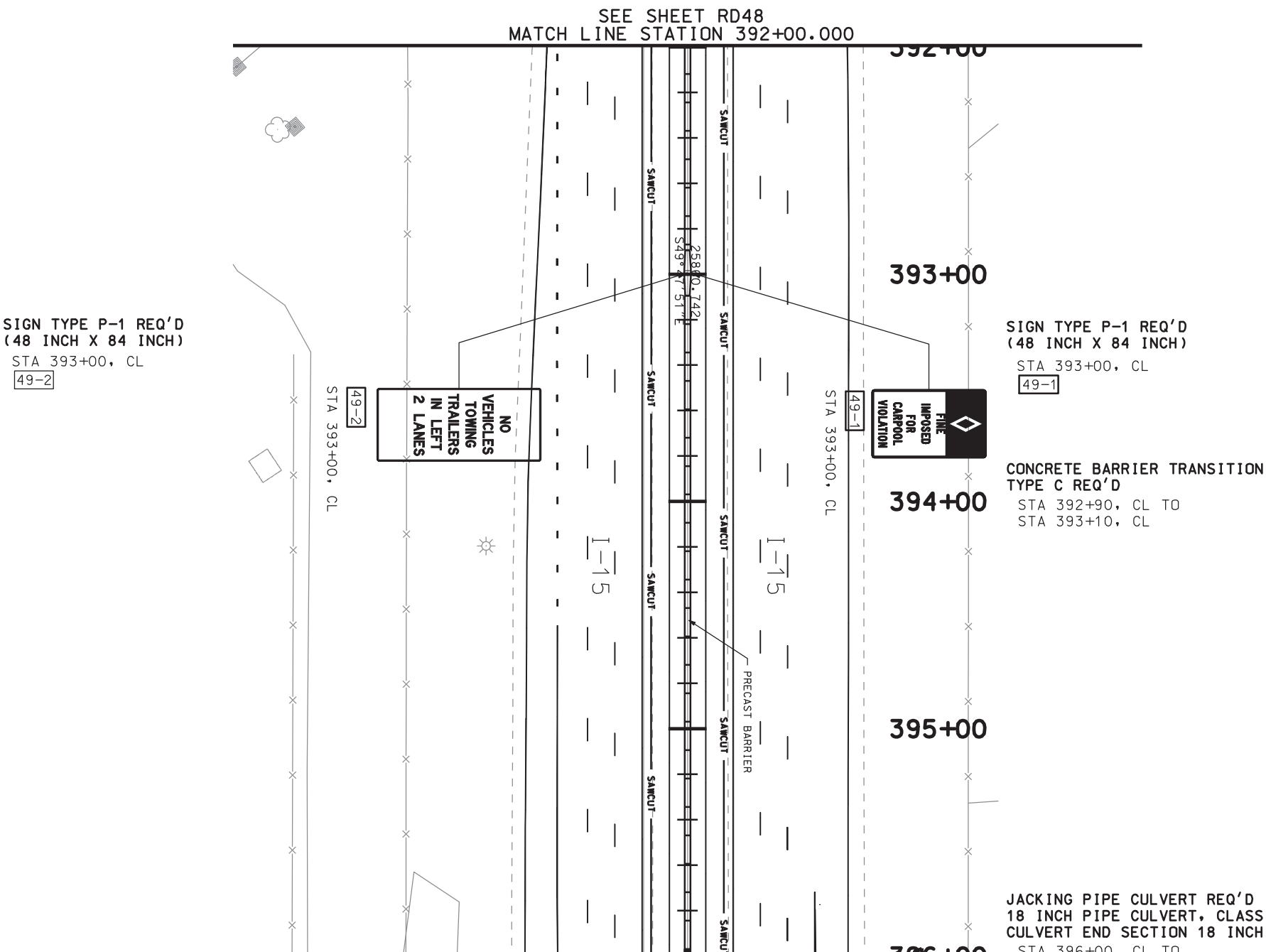
SEE SHEET RD48
MATCH LINE STATION 392+00.000
392+00
393+00
394+00
395+00
SIGN TYPE P-1 REQ'D
(48 INCH X 84 INCH)
STA 393+00, CL
49-2
SIGN TYPE P-1 REQ'D
(48 INCH X 84 INCH)
STA 393+00, CL
49-1
CONCRETE BARRIER TRANSITION
TYPE C REQ'D
STA 392+90, CL TO
STA 393+10, CL
JACKING PIPE CULVERT REQ'D
18 INCH PIPE CULVERT, CLASS A REQ'D.
CULVERT END SECTION 18 INCH REQ'D.
NO VEHICLES TOWING TRAILERS IN LEFT 2 LANES
FINE IMPOSED FOR CARPOOL VIOLATION
SAWCUT
PRECAST BARRIER
I-15
S49°27'51"E
25800.742

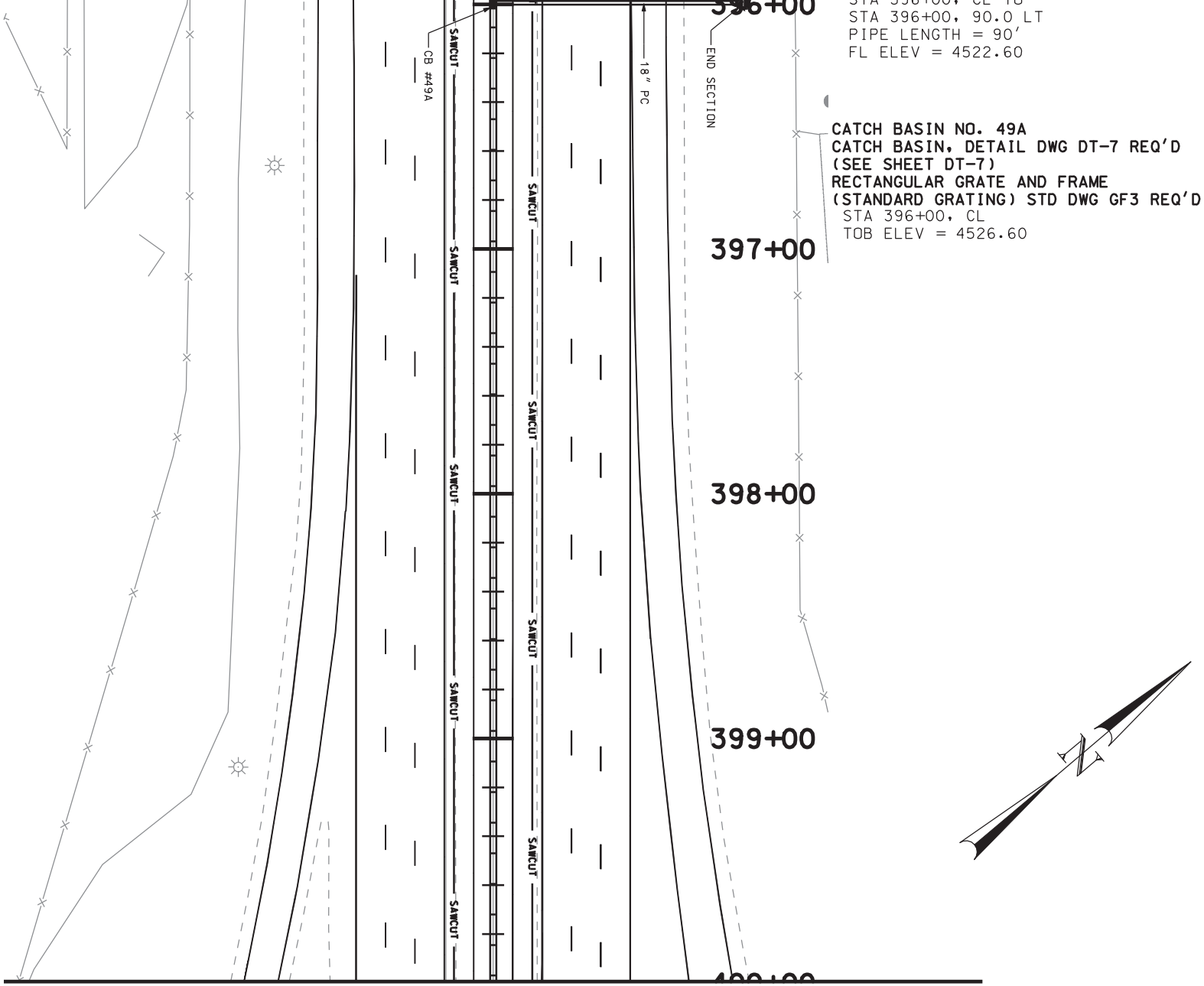


MATCH LINE STATION 400+00.000
SEE SHEET RD50

| | | | | | |
|---|---|---|---|---|---|
| I-15; CORRIDOR | UTAH DEPARTMENT OF TRANSPORTATION | | | | |
| IN UTAH COUNTY | REGION THREE -- OREM CITY, UTAH | | | | |
| PLAN SHEET | ROADWAY DESIGN | | | | |
| PROJECT NUMBER SP-15-6(52)241 | APPROVAL RECOMM. DATE / PROJECT DESIGN ENGINEER | DESIGN JAH 02-05 | CHECK SMM 02-05 | REVIEW | |
| | APPROVED FOR USE BY UDOT DATE / PRECONSTRUCTION ENGINEER | DRAWN JAH 02-05 | CHECK SMM 02-05 | DATE | |
| | | QUANT. JAH 02-05 | CHECK SMM 02-05 | BY | |

| NO. | DATE | DESIGN REV. BY | MAPS CORR. BY | PARCELS AFFECTED | REQUEST BY | REMARKS |
|---|---|---|---|---|---|---|
| | | ORIGINAL SUBMISSION FOR AUTHORIZATION | | | | |
| DATE | | REVISIONS | | | | |

SHEET NO. RD-49
UTAH COUNTY

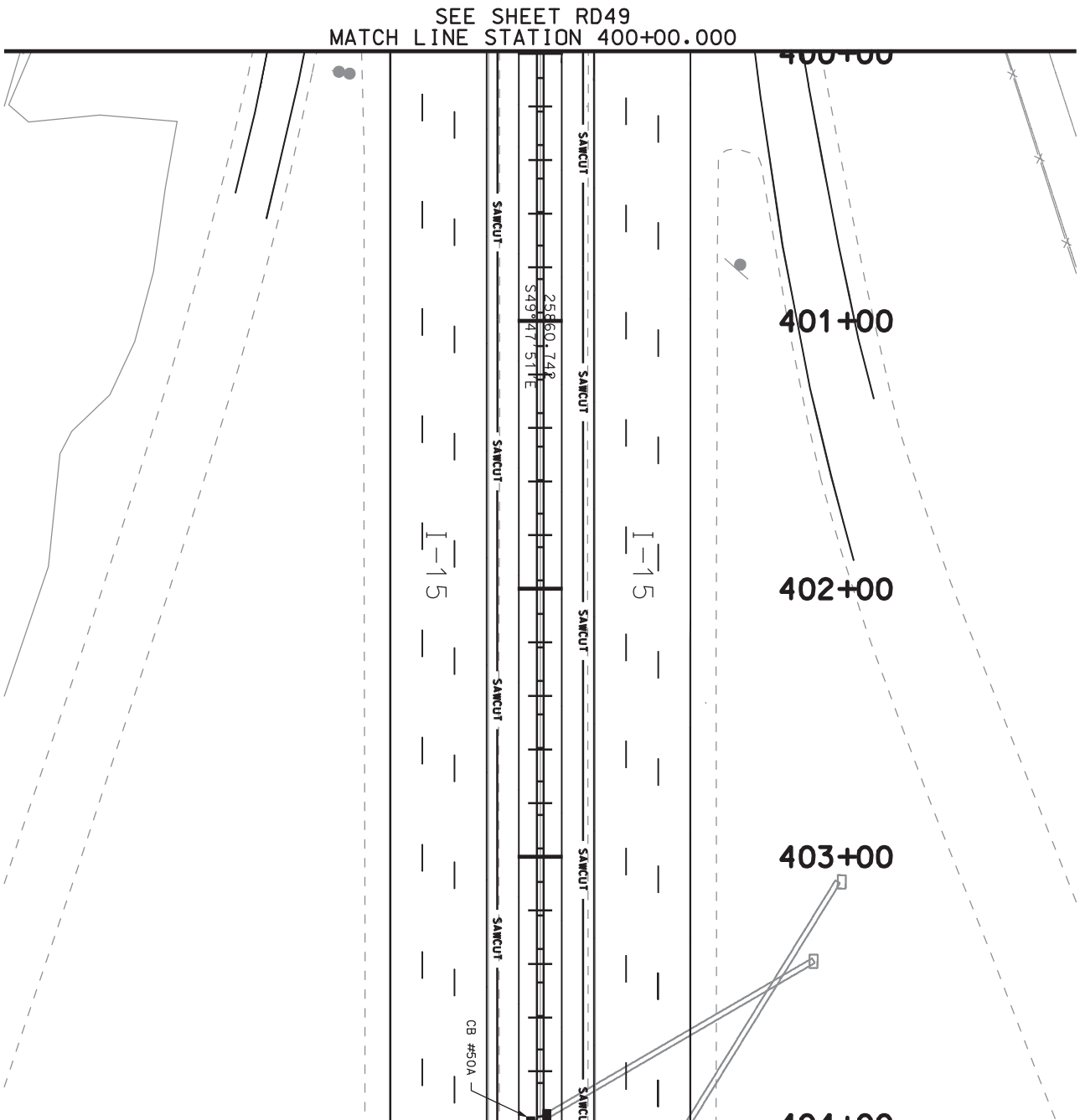
SEE SHEET RD49
MATCH LINE STATION 400+00.000
400+00
401+00
402+00
403+00
404+00
SAWCUT
SAWCUT
SAWCUT
SAWCUT
SAWCUT
SAWCUT
SAWCUT
SAWCUT
I-15
I-15
2580.74R
S49°47'51"E
CB #50A

CATCH BASIN NO. 50A
CATCH BASIN, DETAIL DWG DT-7 REQ'D
(SEE SHEET DT-7)
RECTANGULAR GRATE AND FRAME
(STANDARD GRATING) STD DWG GF3 REQ'D (2).
TIE TO EXISTING PIPE CULVERT

STA 402+00, CL
TOB ELEV = 4498.92

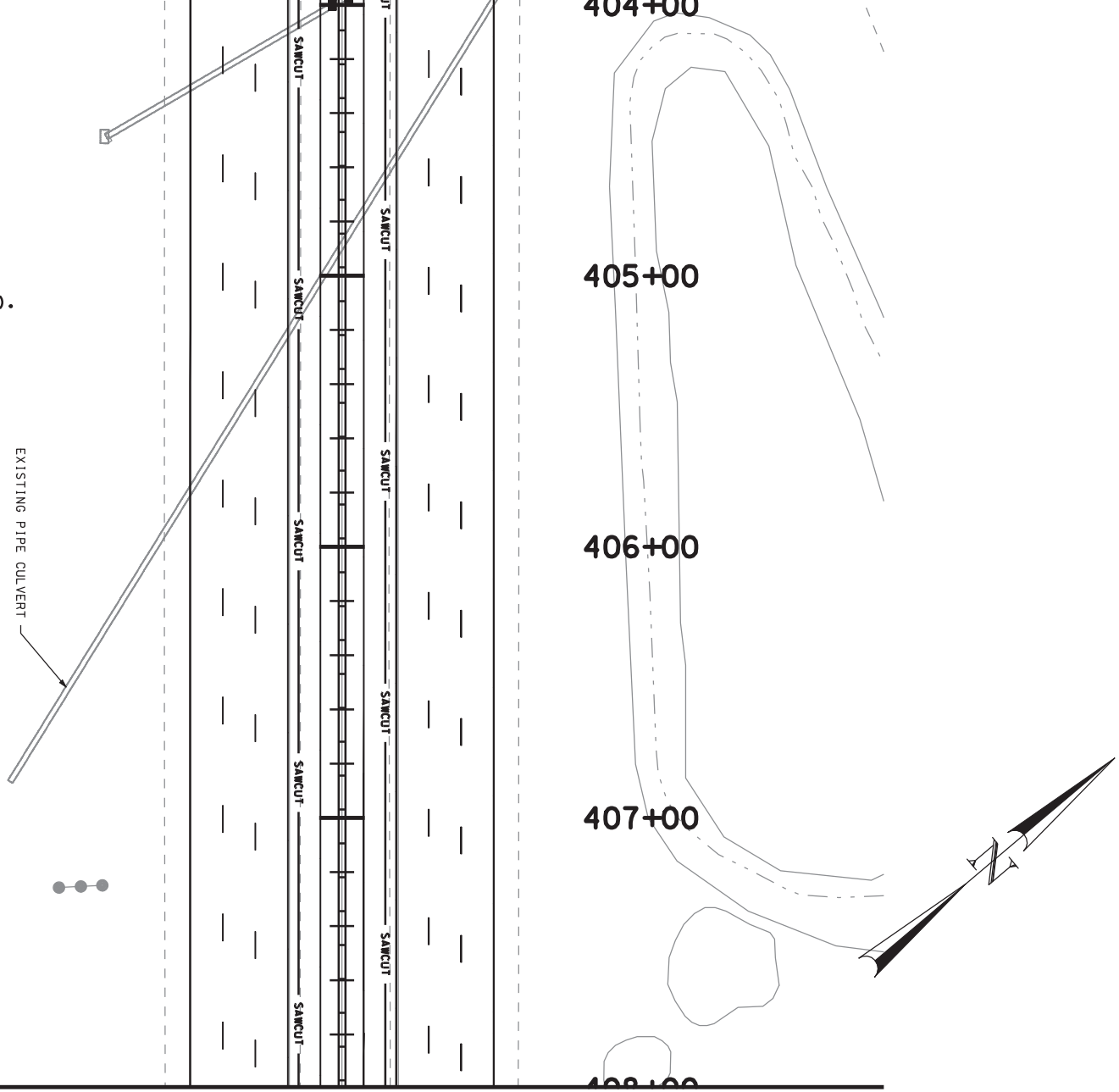


MATCH LINE STATION 408+00.000
SEE SHEET RD51

| | | | | | | |
|---|---|---|---|---|---|---|
| SHEET NO. RD-50 | UTAH COUNTY | I-15; CORRIDOR IN UTAH COUNTY PLAN SHEET | UTAH DEPARTMENT OF TRANSPORTATION<br>REGION THREE -- OREM CITY, UTAH<br>ROADWAY DESIGN | | | |
| | | PROJECT NUMBER SP-15-6(52)241 | APPROVAL RECOMM. ____ DATE ____ PROJECT DESIGN ENGINEER | DESIGN JAH 02-05 | CHECK SMM 02-05 | REVIEW |
| | | | APPROVED FOR USE BY UDOT ____ DATE ____ PRECONSTRUCTION ENGINEER | DRAWN JAH 02-05 | CHECK SMM 02-05 | DATE ____ |
| | | | | QUANT. JAH 02-05 | CHECK SMM 02-05 | BY ____ |

| NO. | DATE | DESIGN REV. BY | MAPS CORR. BY | PARCELS AFFECTED | REQUEST BY | REMARKS |
|---|---|---|---|---|---|---|
| | | ORIGINAL SUBMISSION FOR AUTHORIZATION | | | | |
| | DATE | REVISIONS | | | | |

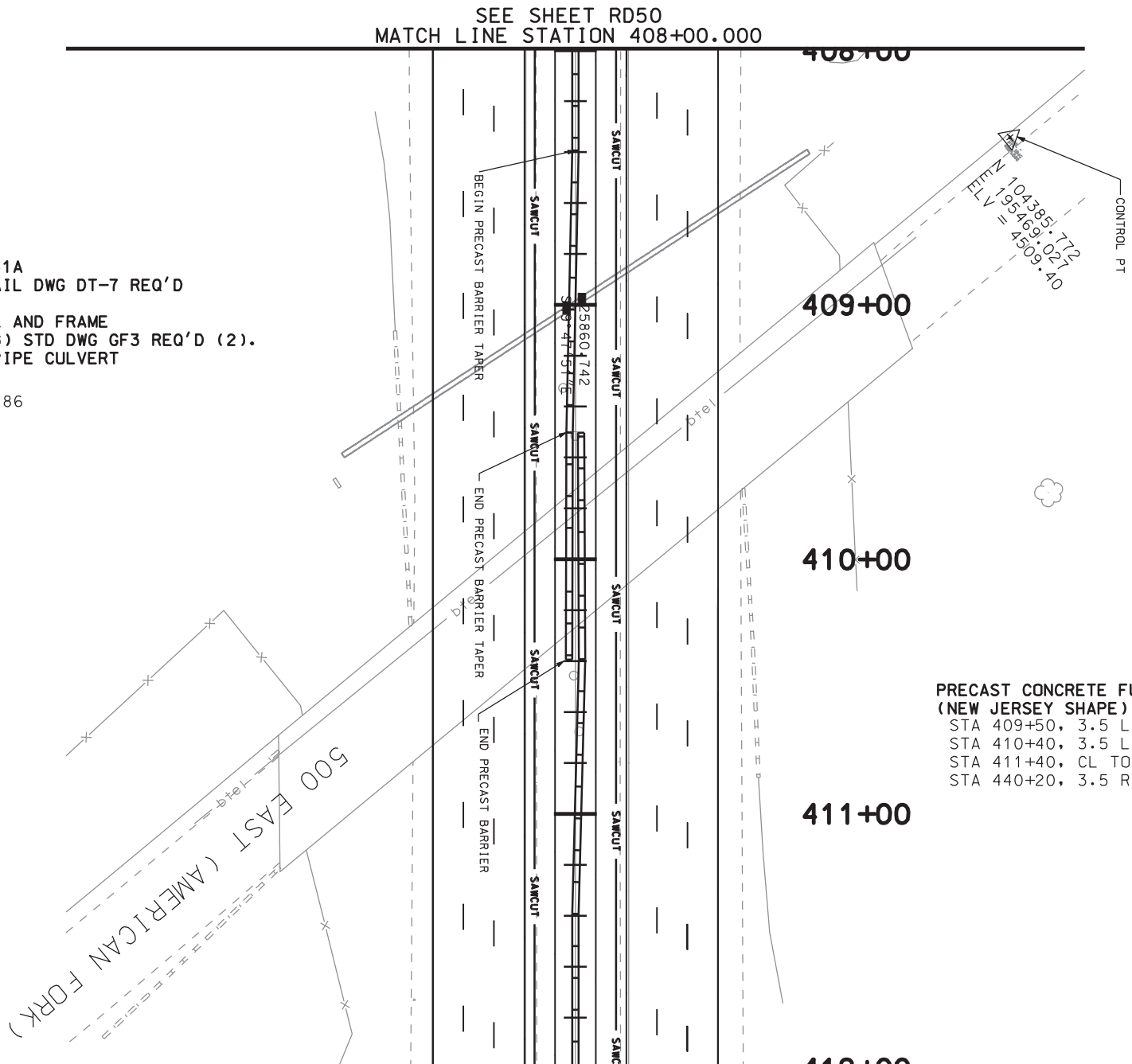


CATCH BASIN NO. 51A
CATCH BASIN, DETAIL DWG DT-7 REQ'D
(SEE SHEET DT-7)
RECTANGULAR GRATE AND FRAME
(STANDARD GRATING) STD DWG GF3 REQ'D (2).
TIE TO EXISTING PIPE CULVERT
STA 409+00, CL
TOB ELEV = 4494.86

PRECAST CONCRETE FULL BARRIER
(NEW JERSEY SHAPE) REQ'D
STA 409+50, 3.5 LT TO
STA 410+40, 3.5 LT TO
STA 411+40, CL TO
STA 440+20, 3.5 RT

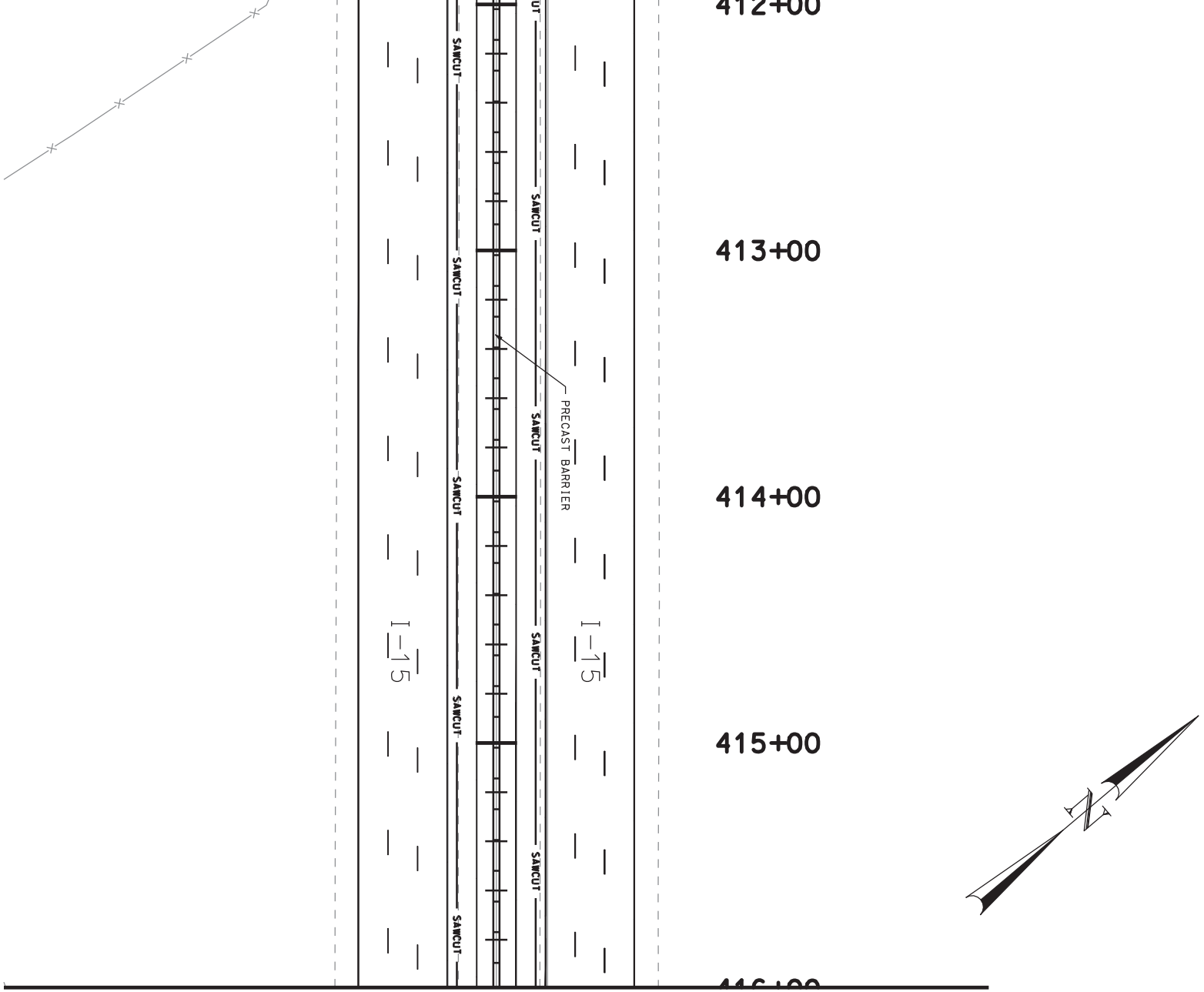


MATCH LINE STATION 416+00.000
SEE SHEET RD52

| | | | | | |
|---|---|---|---|---|---|
| I-15; CORRIDOR | UTAH DEPARTMENT OF TRANSPORTATION | | | | |
| IN UTAH COUNTY | REGION THREE -- OREM CITY, UTAH | | | | |
| PLAN SHEET | ROADWAY DESIGN | | | | |
| | APPROVAL RECOMM. ____ DATE ____ PROJECT DESIGN ENGINEER | DESIGN JAH 02-05 | CHECK SMM 02-05 | REVIEW | |
| PROJECT NUMBER SP-15-6(52)241 | APPROVED FOR USE BY UDOT ____ DATE ____ PRECONSTRUCTION ENGINEER | DRAWN JAH 02-05 | CHECK SMM 02-05 | DATE ____ | |
| | | QUANT. JAH 02-05 | CHECK SMM 02-05 | BY ____ | |

| NO. | DATE | DESIGN REV. BY | MAPS CORR. BY | PARCELS AFFECTED | REQUEST BY | REMARKS |
|---|---|---|---|---|---|---|
| | | ORIGINAL SUBMISSION FOR AUTHORIZATION | | | | |
| | DATE | REVISIONS | | | | |

SHEET NO. RD-51

UTAH COUNTY

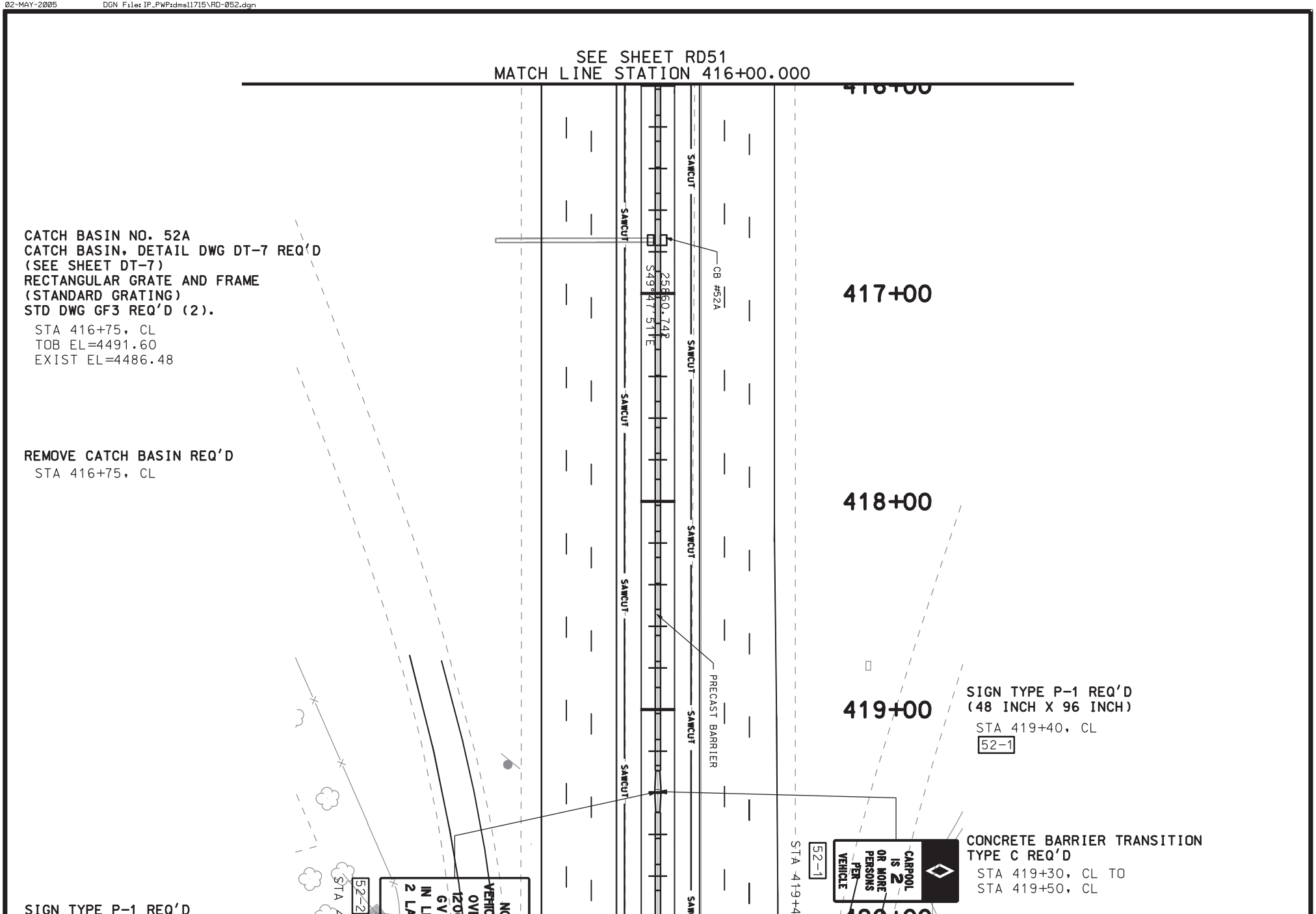
SEE SHEET RD51
MATCH LINE STATION 416+00.000
416+00
417+00
418+00
419+00
CATCH BASIN NO. 52A
CATCH BASIN, DETAIL DWG DT-7 REQ'D
(SEE SHEET DT-7)
RECTANGULAR GRATE AND FRAME
(STANDARD GRATING)
STD DWG GF3 REQ'D (2).
STA 416+75, CL
TOB EL=4491.60
EXIST EL=4486.48
REMOVE CATCH BASIN REQ'D
STA 416+75, CL
CB #52A
25860.74R
S49°47'51"E
SAWCUT
PRECAST BARRIER
SIGN TYPE P-1 REQ'D
(48 INCH X 96 INCH)
STA 419+40, CL
52-1
CONCRETE BARRIER TRANSITION
TYPE C REQ'D
STA 419+30, CL TO
STA 419+50, CL
CARPOOL IS 2 OR MORE PERSONS PER VEHICLE
STA 419+40
SIGN TYPE P-1 REQ'D
52-2

(48 INCH X 84 INCH)
STA 419+40, CL
52-2

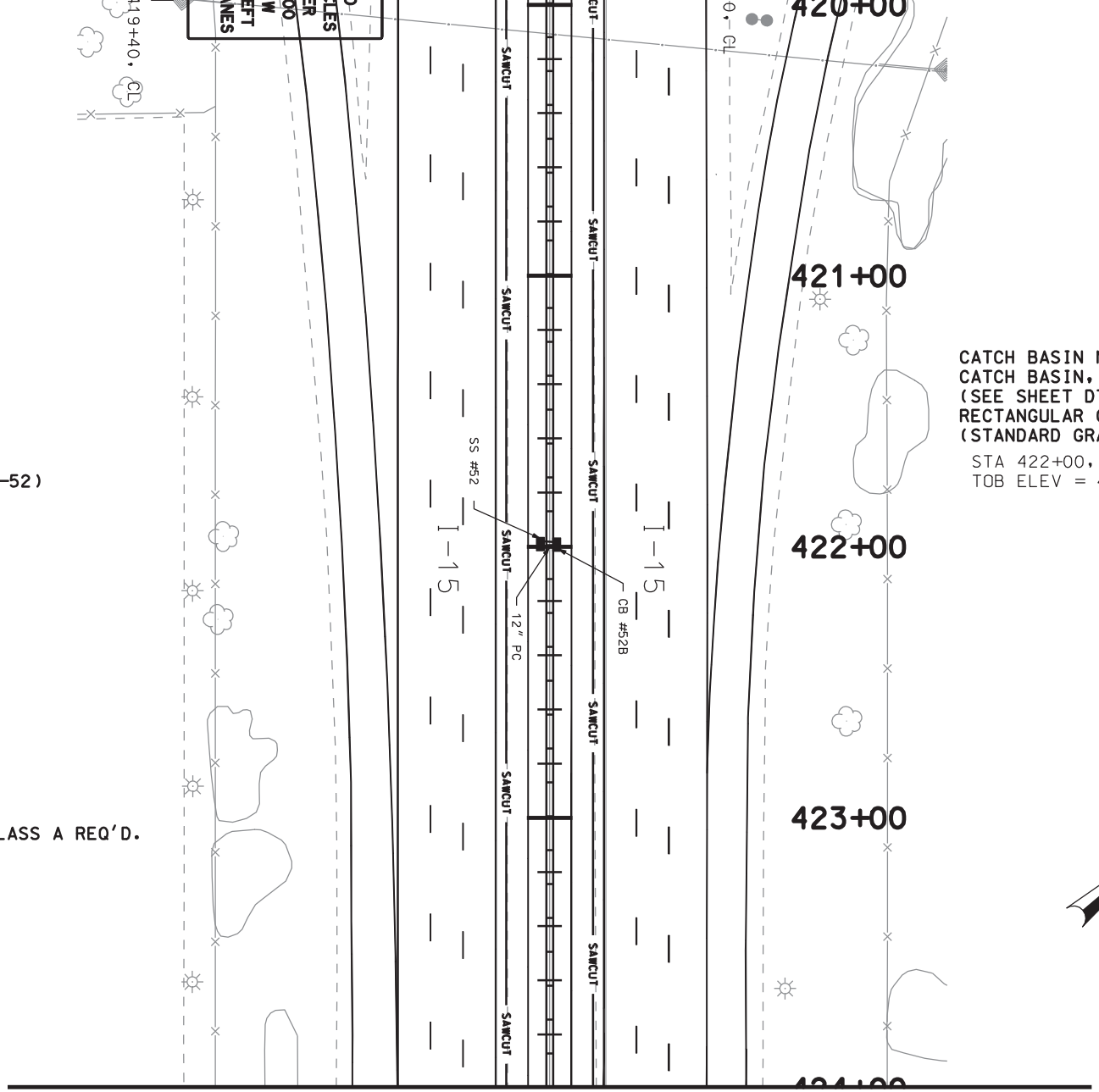


CATCH BASIN NO. 52B
CATCH BASIN, STD DWG CB-10 REQ'D
(SEE SHEET DT-6)
RECTANGULAR GRATE AND FRAME
(STANDARD GRATING) STD DWG GF3 REQ'D.
STA 422+00, 2.0 LT
TOB ELEV = 4489.11

STORM SUMP REQ'D (NO. SS-52)
MANHOLE FRAME AND GRATED
COVER STD GF1 REQ'D
(SEE SHEET DT-6)
STA 422+00, 2.0 RT
TOB ELEV = 4489.11

12 INCH PIPE CULVERT, CLASS A REQ'D.
STA 422+00, 2.0 LT TO
STA 422+00, 2.0 RT

MATCH LINE STATION 424+00.000
SEE SHEET RD53

SHEET NO. RD-52
UTAH COUNTY

I-15; CORRIDOR
IN UTAH COUNTY
PLAN SHEET

PROJECT NUMBER SP-15-6(52)241

UTAH DEPARTMENT OF TRANSPORTATION
REGION THREE -- OREM CITY, UTAH
ROADWAY DESIGN

APPROVAL RECOMM. DATE PROJECT DESIGN ENGINEER
APPROVED FOR USE BY UDOT DATE PRECONSTRUCTION ENGINEER

DESIGN JAH 02-05 CHECK SMM 02-05 REVIEW
DRAWN JAH 02-05 CHECK SMM 02-05 DATE
QUANT. JAH 02-05 CHECK SMM 02-05 BY

| NO. | DATE | DESIGN REV. BY | MAPS CORR. BY | PARCELS AFFECTED | REQUEST BY | REMARKS |
|---|---|---|---|---|---|---|
| | | ORIGINAL SUBMISSION FOR AUTHORIZATION | | | | |

DATE REVISIONS

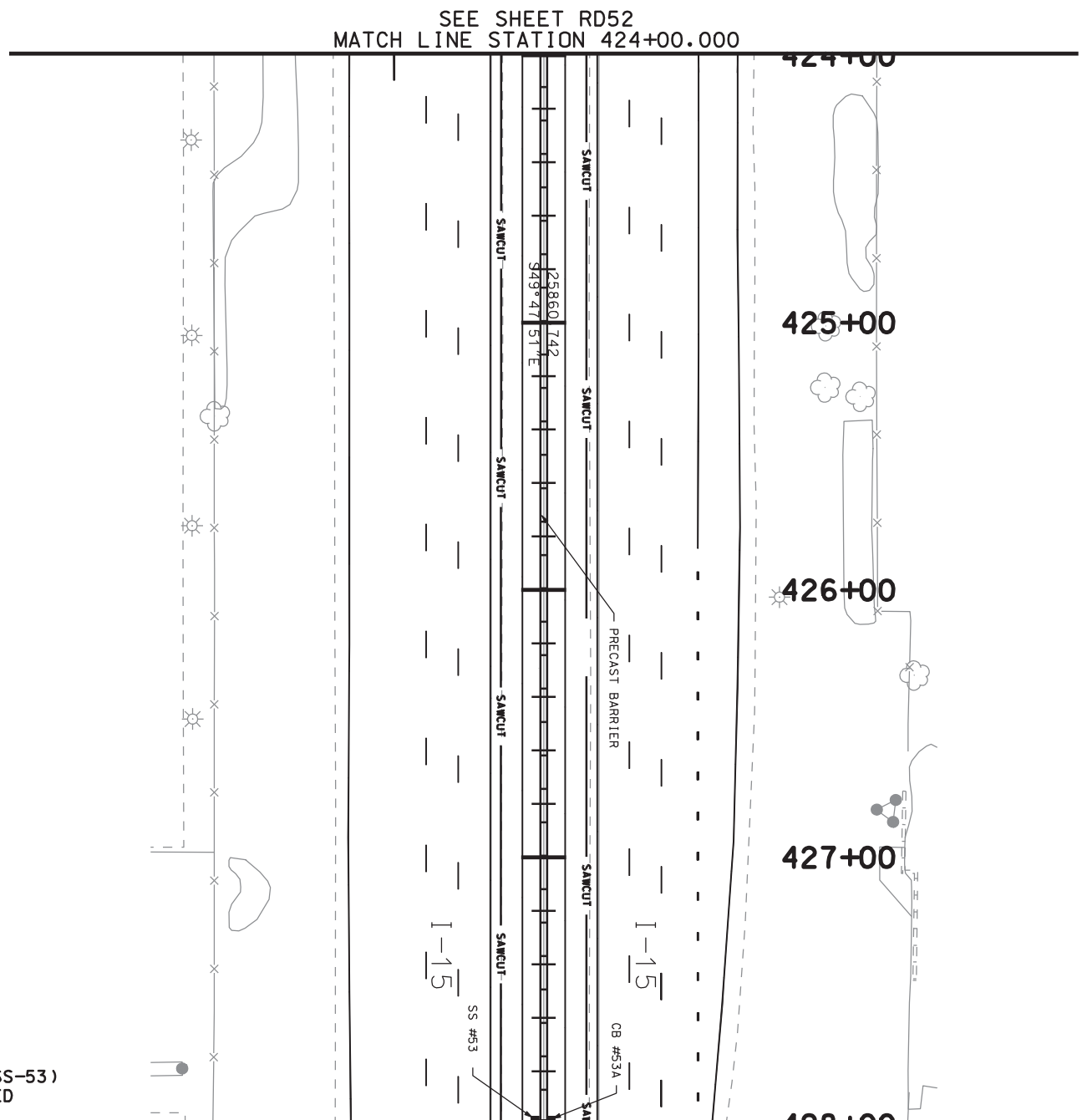


STORM SUMP REQ'D (NO. SS-53)
MANHOLE FRAME AND GRATED
COVER STD GF1 REQ'D

(SEE SHEET DT-6)
STA 428+00, 2.0 RT
TOB ELEV = 4485.26

12 INCH PIPE CULVERT, CLASS A REQ'D.
STA 428+00, 2.0 LT TO
STA 428+00, 2.0 RT

RELOCATE SIGN REQ'D
STA 428+60, CL

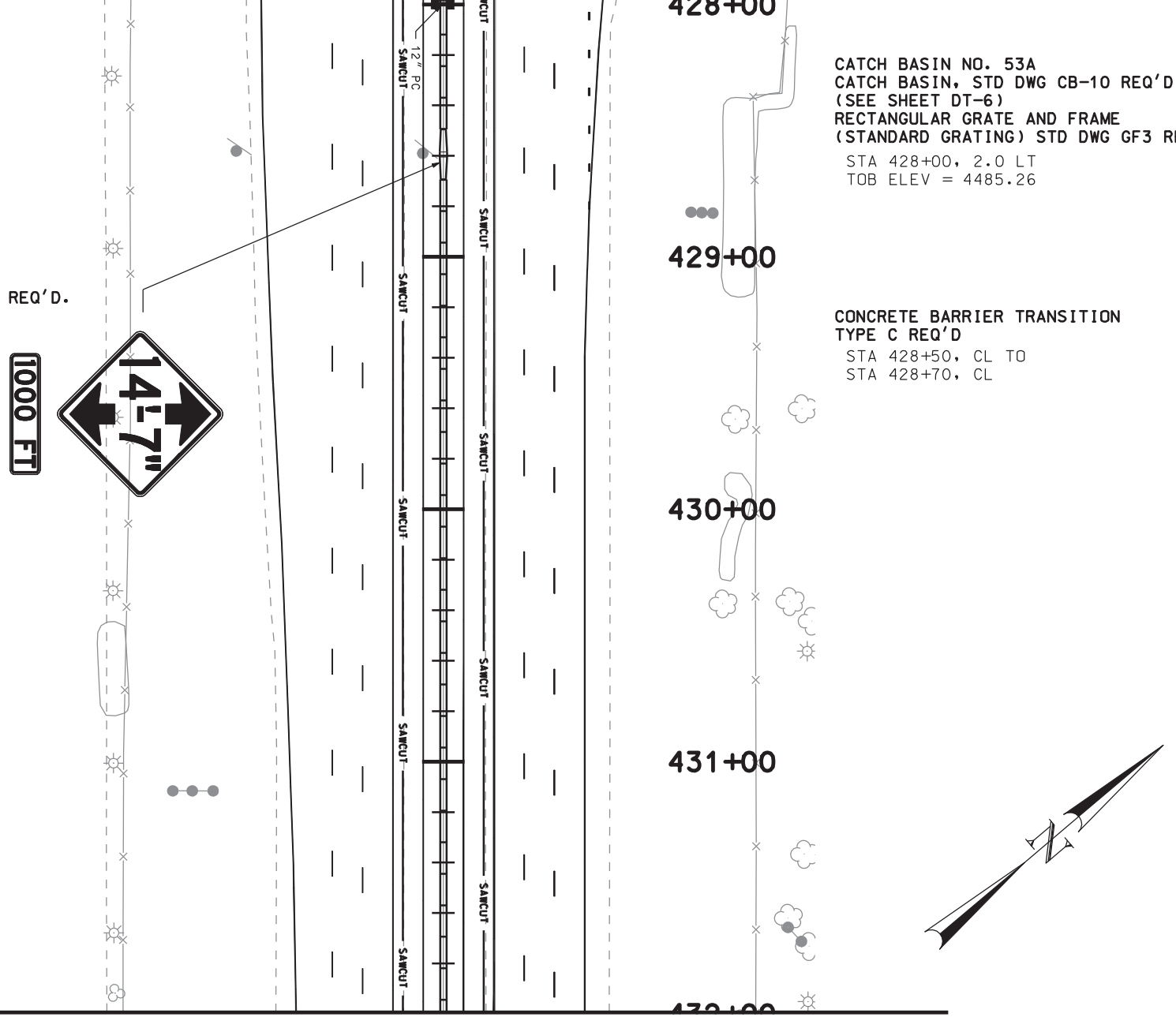


CATCH BASIN NO. 53A
CATCH BASIN, STD DWG CB-10 REQ'D
(SEE SHEET DT-6)
RECTANGULAR GRATE AND FRAME
(STANDARD GRATING) STD DWG GF3 REQ'D.
STA 428+00, 2.0 LT
TOB ELEV = 4485.26

CONCRETE BARRIER TRANSITION
TYPE C REQ'D
STA 428+50, CL TO
STA 428+70, CL

MATCH LINE STATION 432+00.000
SEE SHEET RD54

| | | | | | |
|---|---|---|---|---|---|
| I-15; CORRIDOR | UTAH DEPARTMENT OF TRANSPORTATION | | | | |
| IN UTAH COUNTY | REGION THREE -- OREM CITY, UTAH | | | | |
| PLAN SHEET | ROADWAY DESIGN | | | | |
| PROJECT NUMBER SP-15-6(52)241 | APPROVAL RECOMM. ____ DATE ____ PROJECT DESIGN ENGINEER | DESIGN JAH 02-05 | CHECK SMM 02-05 | REVIEW | |
| | APPROVED FOR USE BY UDOT ____ DATE ____ PRECONSTRUCTION ENGINEER | DRAWN JAH 02-05 | CHECK SMM 02-05 | DATE ____ | |
| | | QUANT. JAH 02-05 | CHECK SMM 02-05 | BY ____ | |

| NO. | DATE | DESIGN REV. BY | MAPS CORR. BY | PARCELS AFFECTED | REQUEST BY | REMARKS |
|---|---|---|---|---|---|---|
| | | ORIGINAL SUBMISSION FOR AUTHORIZATION | | | | |
| | DATE | REVISIONS | | | | |

UTAH COUNTY

SHEET NO. RD-53

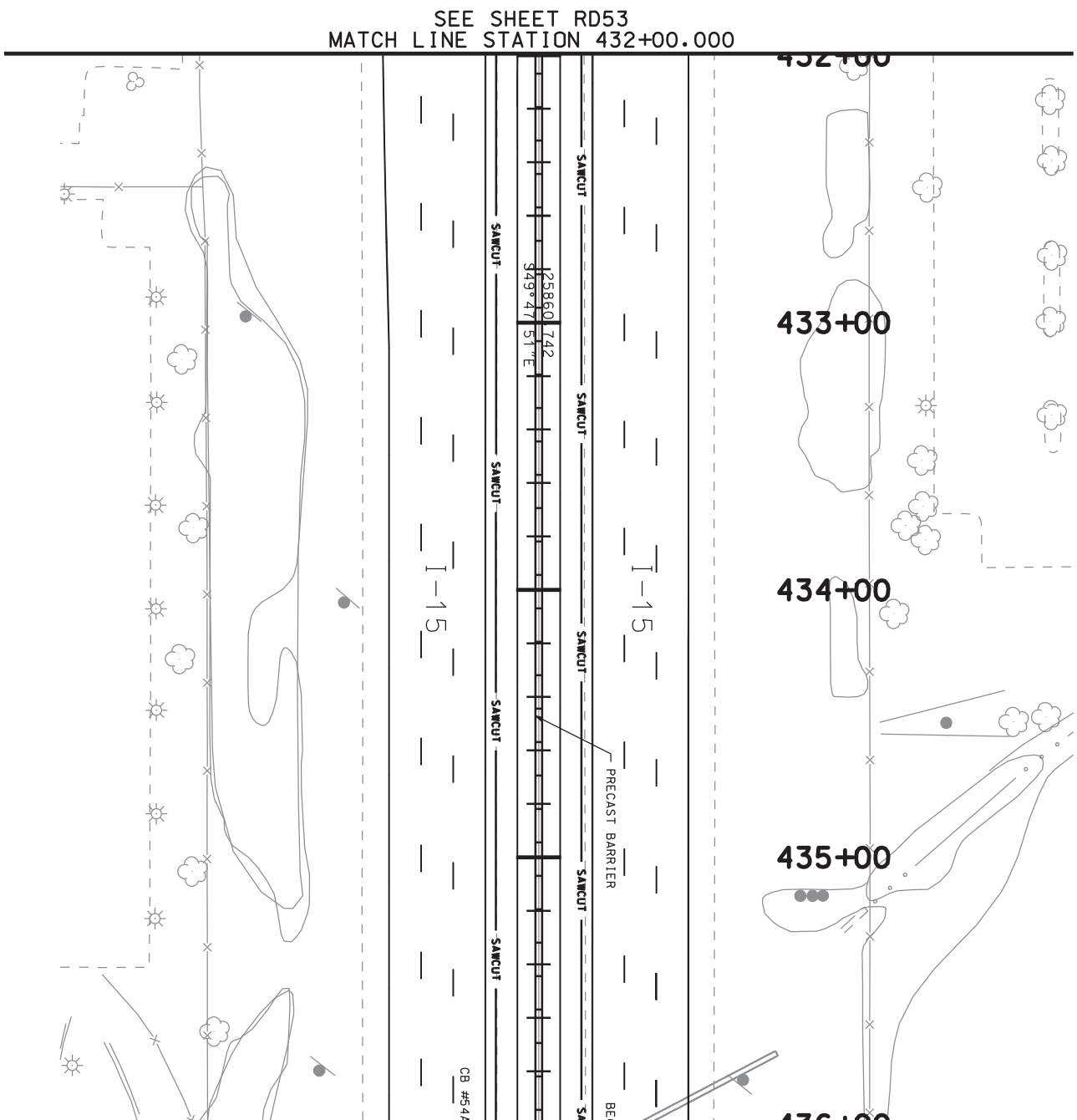
SEE SHEET RD53
MATCH LINE STATION 432+00.000
432+00
433+00
434+00
435+00
436+00
I-15
I-15
SAWCUT
SAWCUT
SAWCUT
SAWCUT
SAWCUT
SAWCUT
SAWCUT
SAWCUT
PRECAST BARRIER
BE
CB #54
125860.742
S49°47'51"E

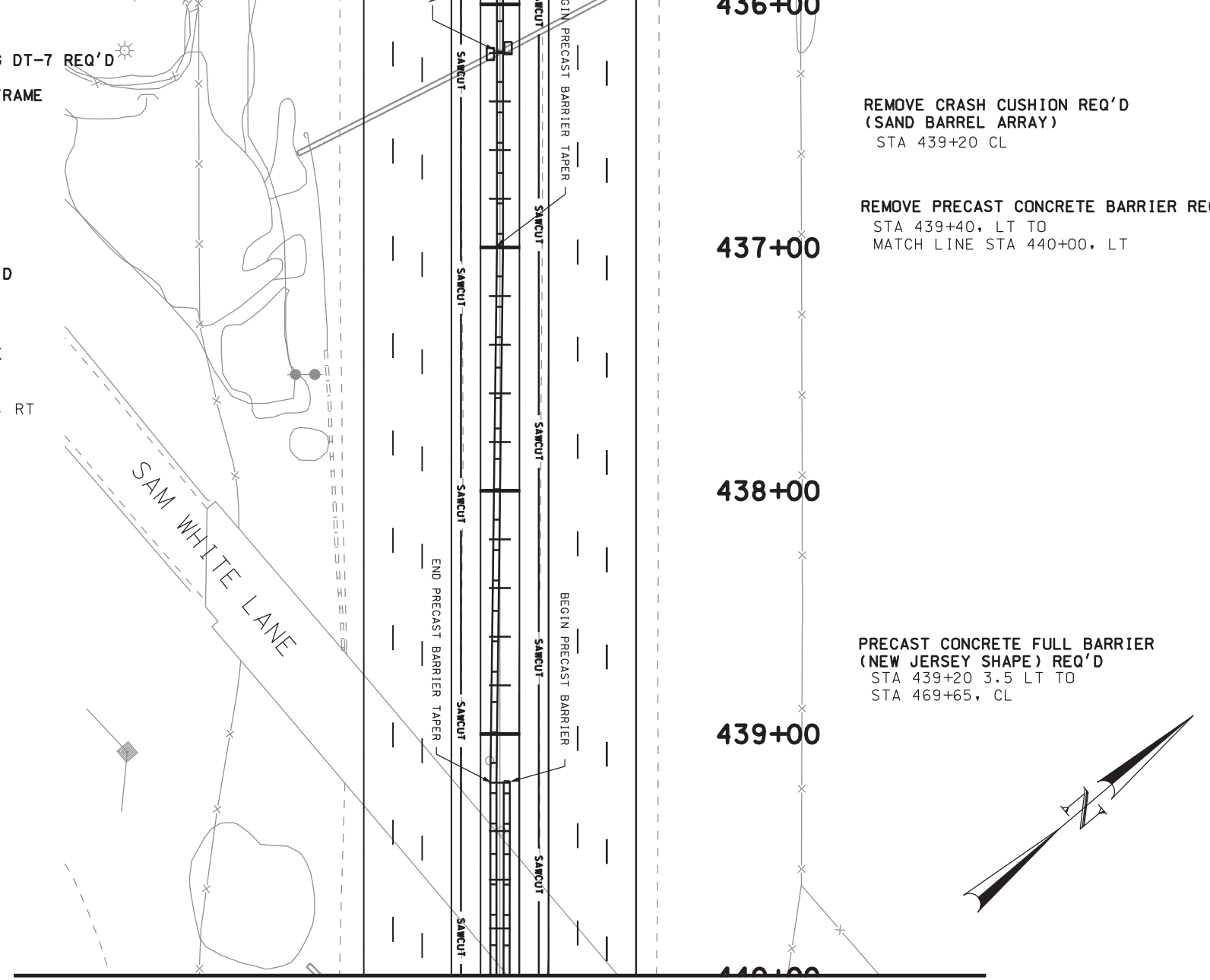


MATCH LINE STATION 440+00.000
SEE SHEET RD55

| | | | | | |
|---|---|---|---|---|---|
| SHEET NO. RD-54 | UTAH COUNTY | I-15; CORRIDOR IN UTAH COUNTY | UTAH DEPARTMENT OF TRANSPORTATION<br>REGION THREE -- OREM CITY, UTAH<br>ROADWAY DESIGN | | |
| | | PLAN SHEET | APPROVAL RECOMM. ____ DATE ____ PROJECT DESIGN ENGINEER | DESIGN JAH 02-05 | CHECK SMM 02-05 | REVIEW |
| | | PROJECT NUMBER SP-15-6(52)241 | APPROVED FOR USE BY UDOT ____ DATE ____ PRECONSTRUCTION ENGINEER | DRAWN JAH 02-05 | CHECK SMM 02-05 | DATE ____ |
| | | | | QUANT. JAH 02-05 | CHECK SMM 02-05 | BY ____ |

| NO. | DATE | DESIGN REV. BY | MAPS CORR. BY | PARCELS AFFECTED | REQUEST BY | REMARKS |
|---|---|---|---|---|---|---|
| | | ORIGINAL SUBMISSION FOR AUTHORIZATION | | | | |
| DATE | | REVISIONS | | | | |

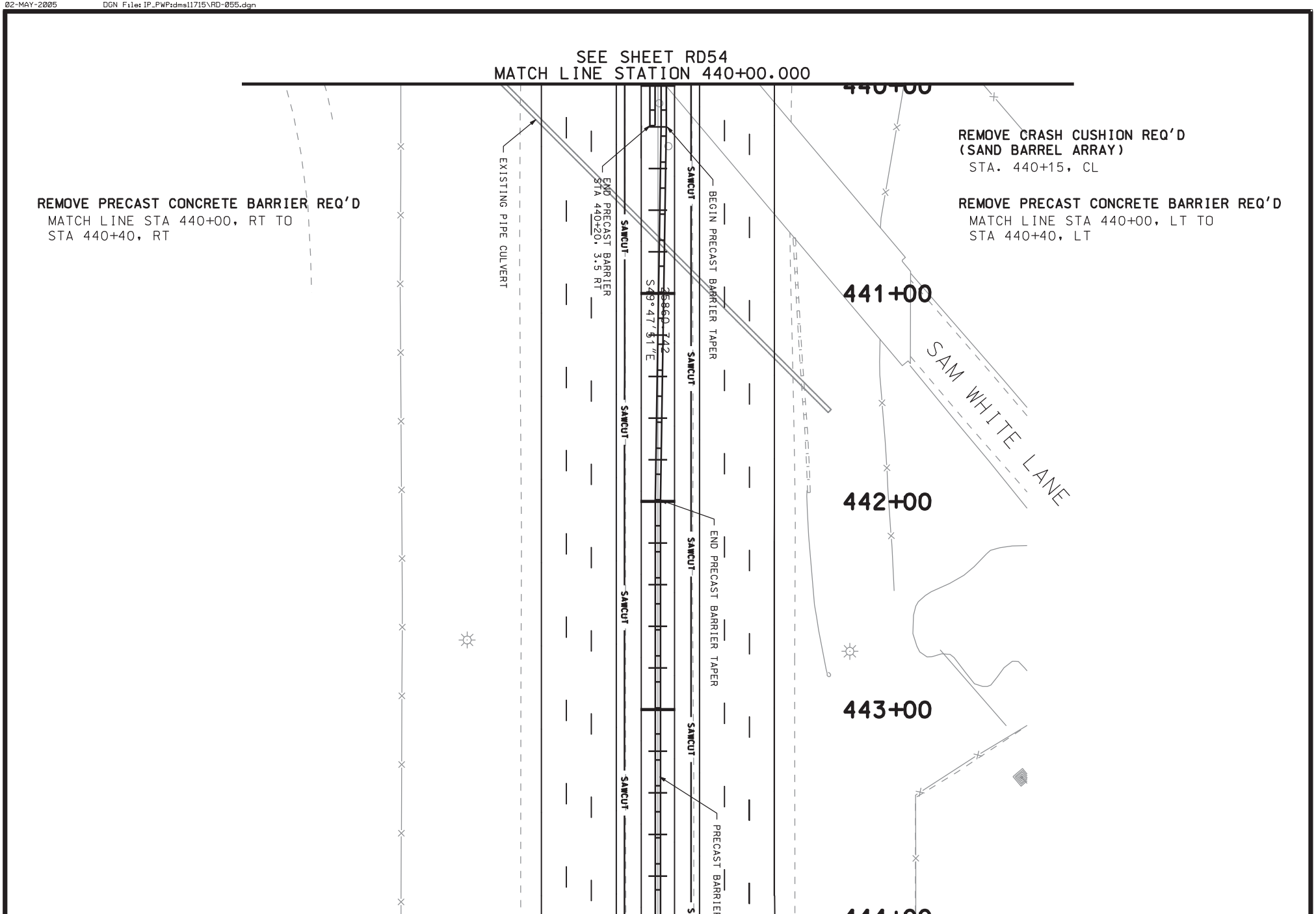
SEE SHEET RD54
MATCH LINE STATION 440+00.000
440+00
REMOVE CRASH CUSHION REQ'D
(SAND BARREL ARRAY)
STA. 440+15, CL
REMOVE PRECAST CONCRETE BARRIER REQ'D
MATCH LINE STA 440+00, LT TO
STA 440+40, LT
REMOVE PRECAST CONCRETE BARRIER REQ'D
MATCH LINE STA 440+00, RT TO
STA 440+40, RT
EXISTING PIPE CULVERT
END PRECAST BARRIER
STA 440+20, 3.5 RT
BEGIN PRECAST BARRIER TAPER
SAWCUT
S49° 47' 31"E
441+00
SAM WHITE LANE
442+00
END PRECAST BARRIER TAPER
443+00
PRECAST BARRIER

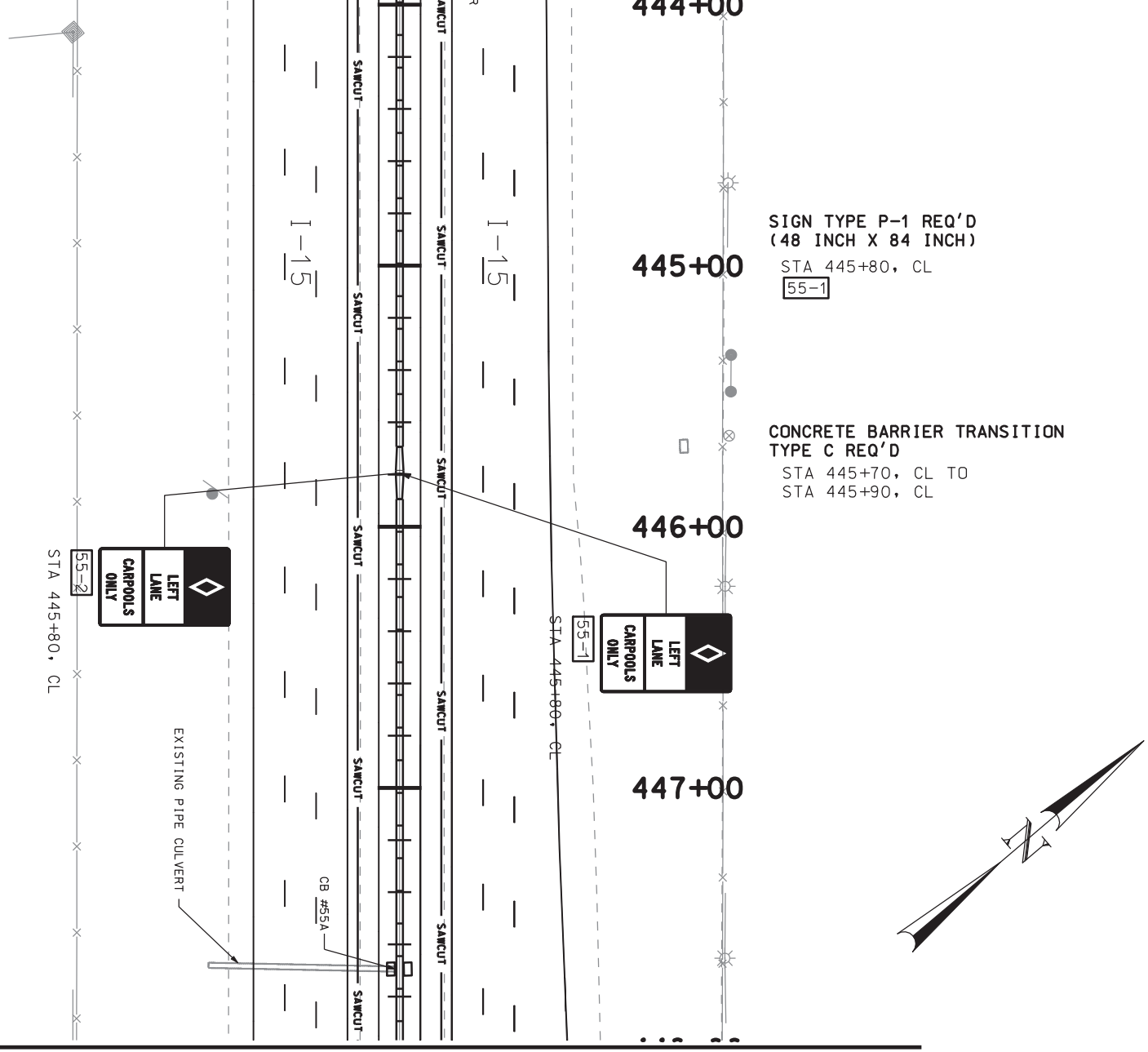


SIGN TYPE P-1 REQ'D
(48 INCH X 84 INCH)
STA 445+80, CL
55-2

REMOVE CATCH BASIN REQ'D
STA 447+70, CL

CATCH BASIN NO. 55A
CATCH BASIN, DETAIL DWG DT-7 REQ'D
(SEE SHEET DT-7)
RECTANGULAR GRATE AND FRAME
(STANDARD GRATING)
STD DWG GF3 REQ'D (2).
STA 447+70, CL
TOB EL=4475.00
EXIST EL=4469.30

MATCH LINE STATION 448+00.000
SEE SHEET RD56

| | | | | | | |
|---|---|---|---|---|---|---|
| SHEET NO. RD-55 | UTAH COUNTY | I-15; CORRIDOR IN UTAH COUNTY | UTAH DEPARTMENT OF TRANSPORTATION | | | |
| | | PLAN SHEET | REGION THREE -- OREM CITY, UTAH | | | |
| | | | ROADWAY DESIGN | | | |
| | | PROJECT NUMBER SP-15-6(52)241 | APPROVAL RECOMM. DATE PROJECT DESIGN ENGINEER | DESIGN JAH 02-05 | CHECK SMM 02-05 | REVIEW |
| | | | APPROVED FOR USE BY UDOT DATE PRECONSTRUCTION ENGINEER | DRAWN JAH 02-05 | CHECK SMM 02-05 | DATE |
| | | | | QUANT. JAH 02-05 | CHECK SMM 02-05 | BY |

| NO. | DATE | DESIGN REV. BY | MAPS CORR. BY | PARCELS AFFECTED | REQUEST BY | REMARKS |
|---|---|---|---|---|---|---|
| | | ORIGINAL SUBMISSION FOR AUTHORIZATION | | | | |
| | DATE | REVISIONS | | | | |

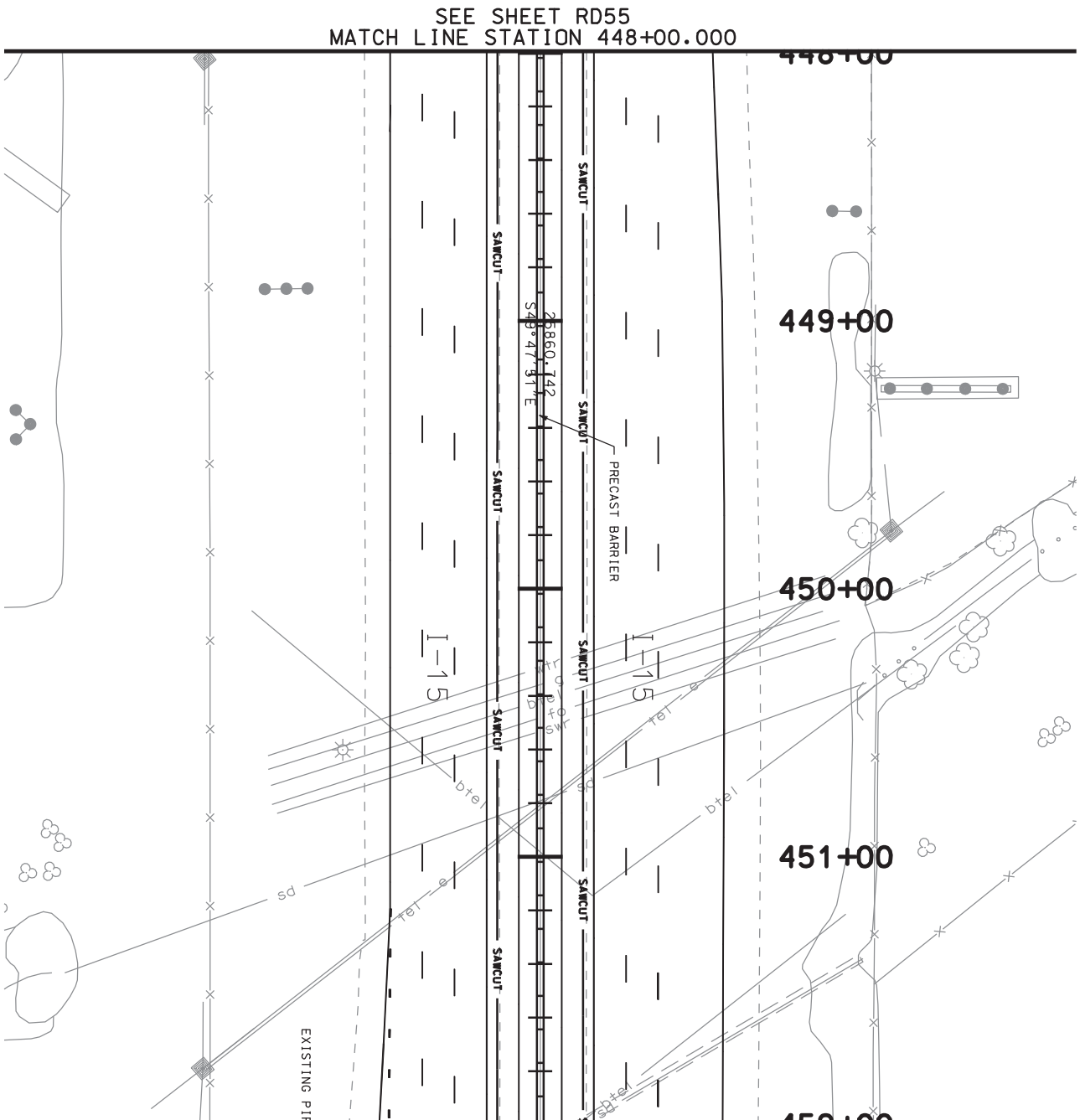
SEE SHEET RD55
MATCH LINE STATION 448+00.000
448+00
449+00
450+00
451+00
452+00
SAWCUT
SAWCUT
SAWCUT
SAWCUT
SAWCUT
SAWCUT
SAWCUT
SAWCUT
PRECAST BARRIER
25860.742
S49°47'31"E
I-15
I-15
bte
bte
bte
ps
ps
ps
tel
tel
tel
EXISTING PIPE

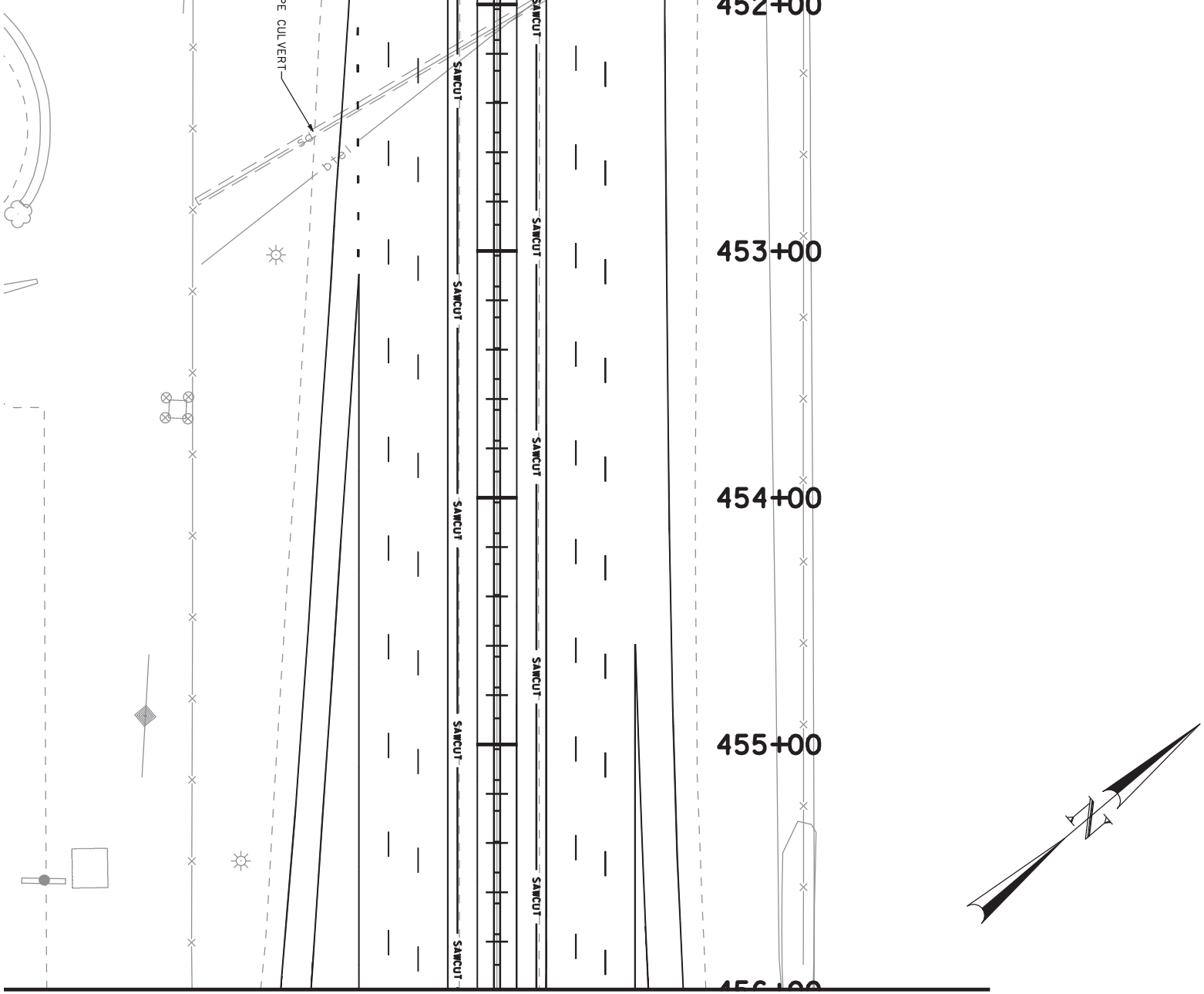


MATCH LINE STATION 456+00.000
SEE SHEET RD57

| | | | | | | |
|---|---|---|---|---|---|---|
| SHEET NO. RD-56 | UTAH COUNTY | I-15; CORRIDOR IN UTAH COUNTY | UTAH DEPARTMENT OF TRANSPORTATION<br>REGION THREE -- OREM CITY, UTAH<br>ROADWAY DESIGN | | | |
| | | PLAN SHEET | APPROVAL RECOMM. ____ DATE ____ PROJECT DESIGN ENGINEER | DESIGN JAH 02-05 | CHECK SMM 02-05 | REVIEW |
| | | PROJECT NUMBER SP-15-6(52)241 | APPROVED FOR USE BY UDOT ____ DATE ____ PRECONSTRUCTION ENGINEER | DRAWN JAH 02-05 | CHECK SMM 02-05 | DATE ____ |
| | | | | QUANT. JAH 02-05 | CHECK SMM 02-05 | BY ____ |

| NO. | DATE | DESIGN REV. BY | MAPS CORR. BY | PARCELS AFFECTED | REQUEST BY | REMARKS |
|---|---|---|---|---|---|---|
| | | ORIGINAL SUBMISSION FOR AUTHORIZATION | | | | |
| | DATE | REVISIONS | | | | |

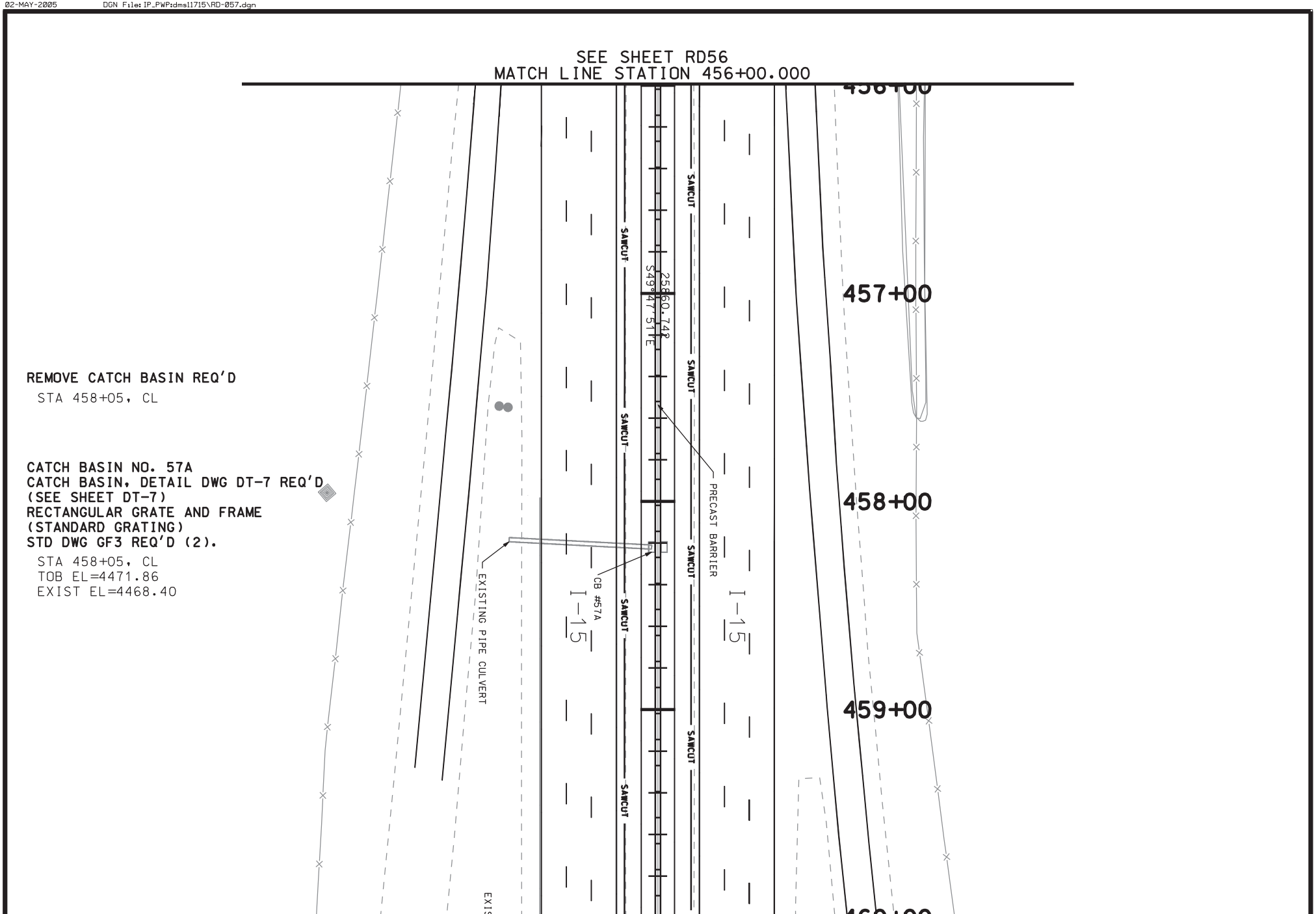
SEE SHEET RD56
MATCH LINE STATION 456+00.000
456+00
457+00
458+00
459+00
460+00
REMOVE CATCH BASIN REQ'D
STA 458+05, CL
CATCH BASIN NO. 57A
CATCH BASIN, DETAIL DWG DT-7 REQ'D
(SEE SHEET DT-7)
RECTANGULAR GRATE AND FRAME
(STANDARD GRATING)
STD DWG GF3 REQ'D (2).
STA 458+05, CL
TOB EL=4471.86
EXIST EL=4468.40
SAWCUT
PRECAST BARRIER
I-15
CB #57A
EXISTING PIPE CULVERT
S49°47'51"E
25860.74R

REMOVE CATCH BASIN REQ'D
STA 460+90, CL

CATCH BASIN NO. 57B
CATCH BASIN, DETAIL DWG DT-7 REQ'D
(SEE SHEET DT-7)
RECTANGULAR GRATE AND FRAME
(STANDARD GRATING)
STD DWG GF3 REQ'D (2).
STA 460+90, CL
TOB EL=4471.20
EXIST EL=4465.80

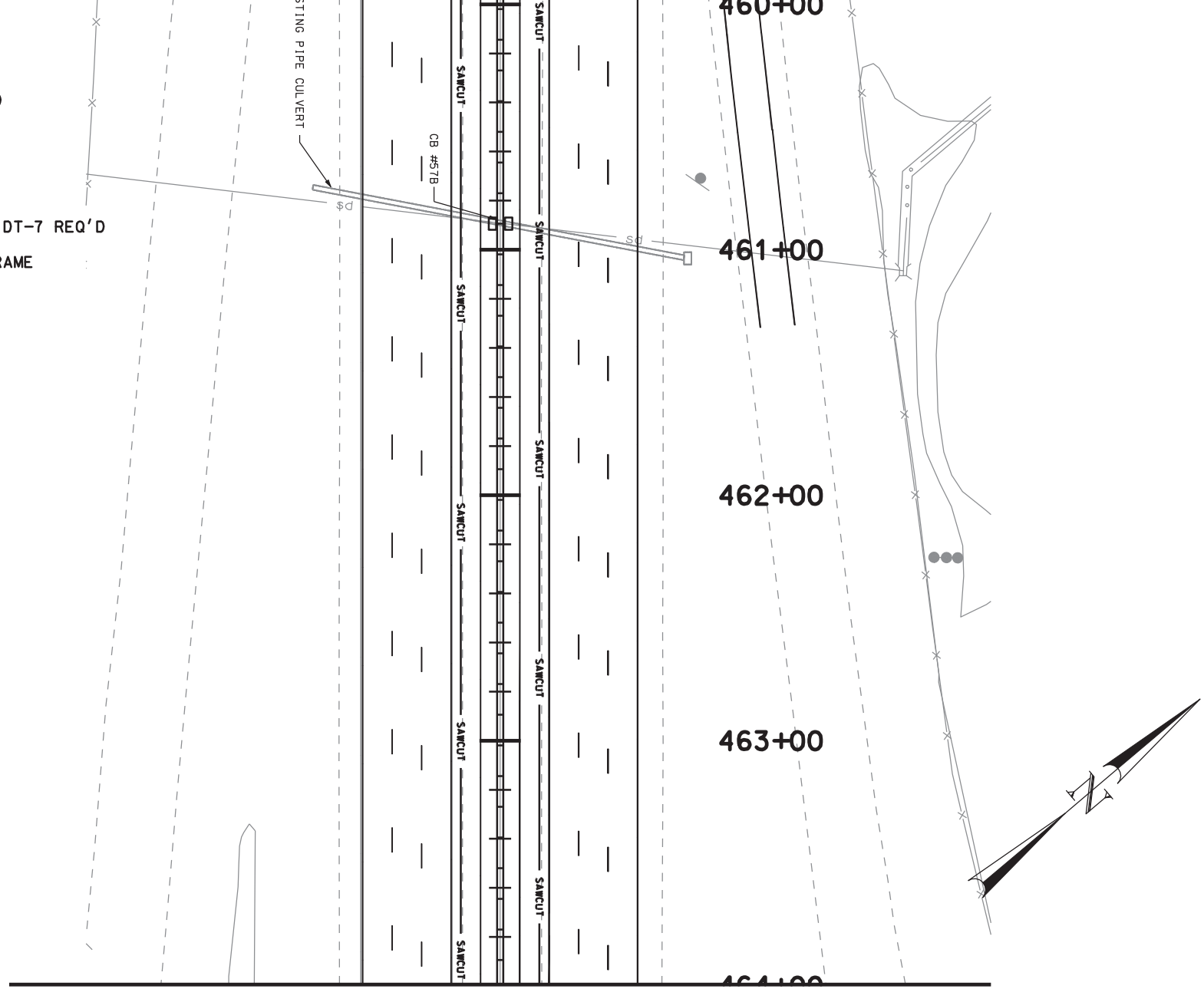


MATCH LINE STATION 464+00.000
SEE SHEET RD58

| | | | | | | |
|---|---|---|---|---|---|---|
| SHEET NO. RD-57 | UTAH COUNTY | I-15; CORRIDOR IN UTAH COUNTY PLAN SHEET | UTAH DEPARTMENT OF TRANSPORTATION<br>REGION THREE -- OREM CITY, UTAH<br>ROADWAY DESIGN | | | |
| | | PROJECT NUMBER SP-15-6(52)241 | APPROVAL RECOMM. DATE PROJECT DESIGN ENGINEER | DESIGN JAH 02-05 | CHECK SMM 02-05 | REVIEW |
| | | | APPROVED FOR USE BY UDOT DATE PRECONSTRUCTION ENGINEER | DRAWN JAH 02-05 | CHECK SMM 02-05 | DATE |
| | | | | QUANT. JAH 02-05 | CHECK SMM 02-05 | BY |

| NO. | DATE | DESIGN REV. BY | MAPS CORR. BY | PARCELS AFFECTED | REQUEST BY | REMARKS |
|---|---|---|---|---|---|---|
| | | ORIGINAL SUBMISSION FOR AUTHORIZATION | | | | |
| | DATE | REVISIONS | | | | |

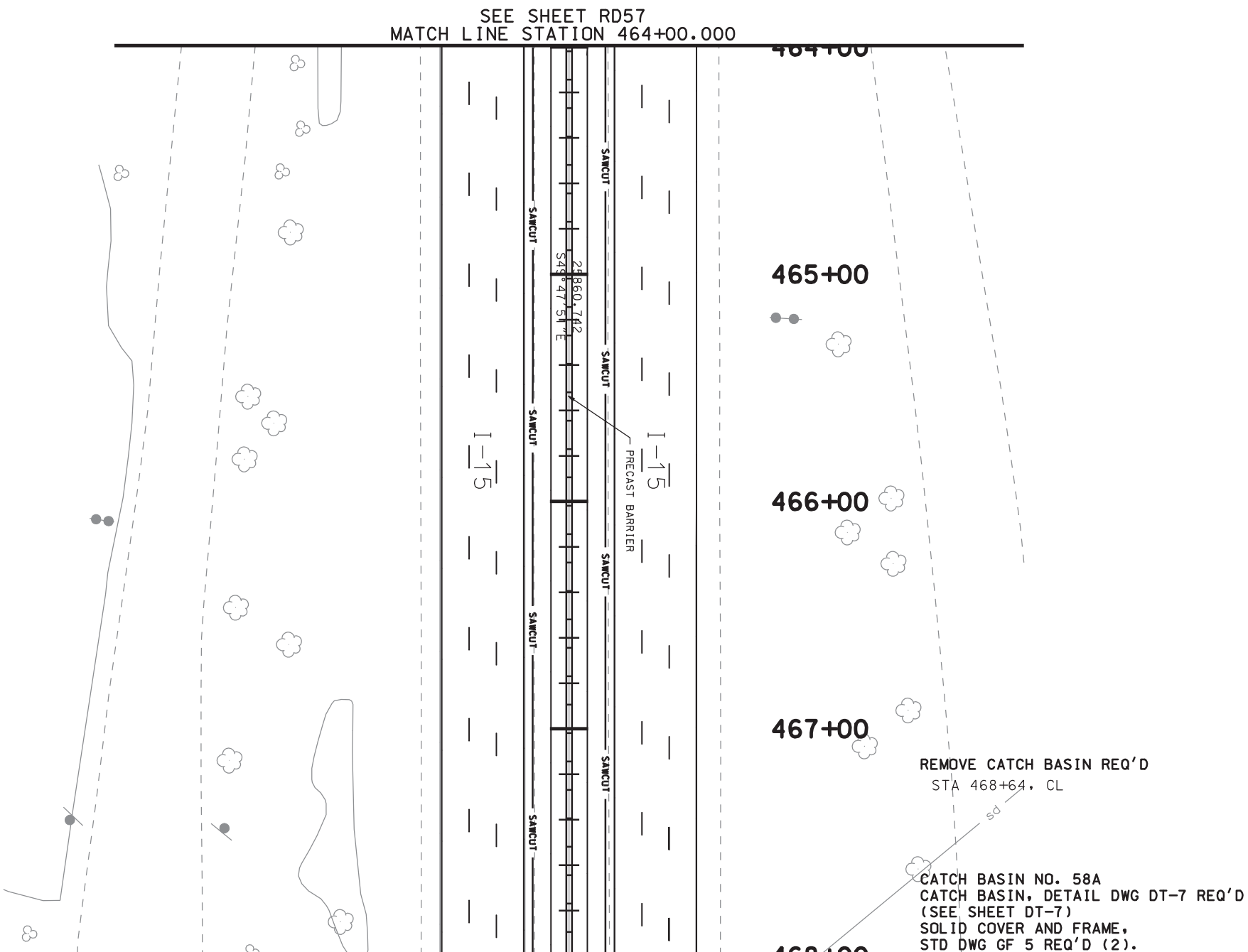
SEE SHEET RD57
MATCH LINE STATION 464+00.000
464+00
465+00
466+00
467+00
I-15
I-15
SAWCUT
SAWCUT
SAWCUT
SAWCUT
SAWCUT
SAWCUT
SAWCUT
SAWCUT
21860.742
S49°47'51"E
PRECAST BARRIER
REMOVE CATCH BASIN REQ'D
STA 468+64, CL
ps
CATCH BASIN NO. 58A
CATCH BASIN, DETAIL DWG DT-7 REQ'D
(SEE SHEET DT-7)
SOLID COVER AND FRAME,
STD DWG GF 5 REQ'D (2).

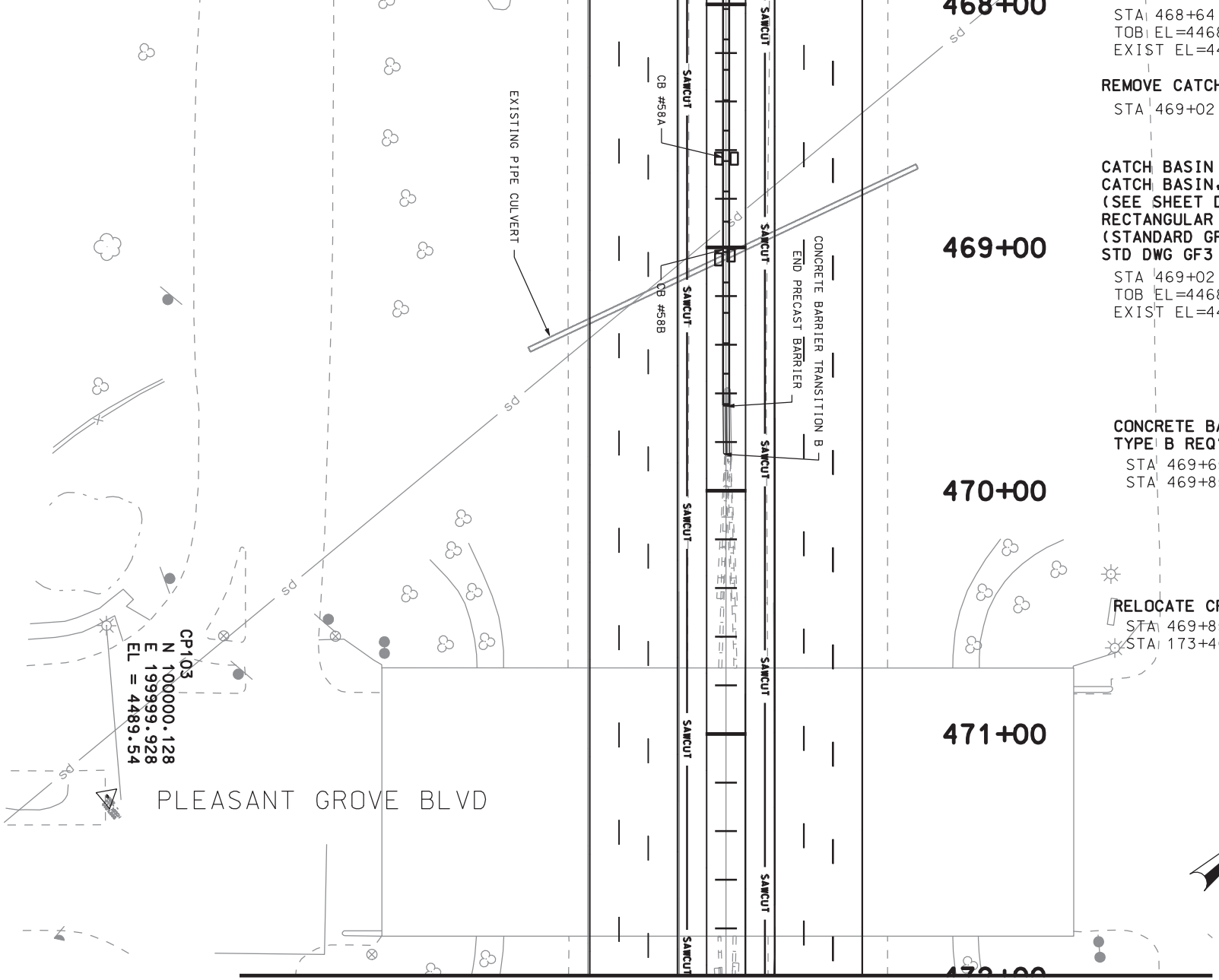


MATCH LINE STATION 472+00.000
SEE SHEET RD59

| | | | | | |
|---|---|---|---|---|---|
| I-15; CORRIDOR | UTAH DEPARTMENT OF TRANSPORTATION | | | | |
| IN UTAH COUNTY | REGION THREE -- OREM CITY, UTAH | | | | |
| PLAN SHEET | ROADWAY DESIGN | | | | |
| | APPROVAL RECOMM. ____ DATE ____ PROJECT DESIGN ENGINEER | DESIGN JAH 02-05 | CHECK SMM 02-05 | REVIEW | |
| PROJECT NUMBER SP-15-6(52)241 | APPROVED FOR USE BY UDOT ____ DATE ____ PRECONSTRUCTION ENGINEER | DRAWN JAH 02-05 | CHECK SMM 02-05 | DATE ____ | |
| | | QUANT. JAH 02-05 | CHECK SMM 02-05 | BY ____ | |

| NO. | DATE | DESIGN REV. BY | MAPS CORR. BY | PARCELS AFFECTED | REQUEST BY | REMARKS |
|---|---|---|---|---|---|---|
| | | ORIGINAL SUBMISSION FOR AUTHORIZATION | | | | |
| DATE | | REVISIONS | | | | |

SHEET NO. RD-58
UTAH COUNTY

SEE SHEET RD58
MATCH LINE STATION 472+00.000

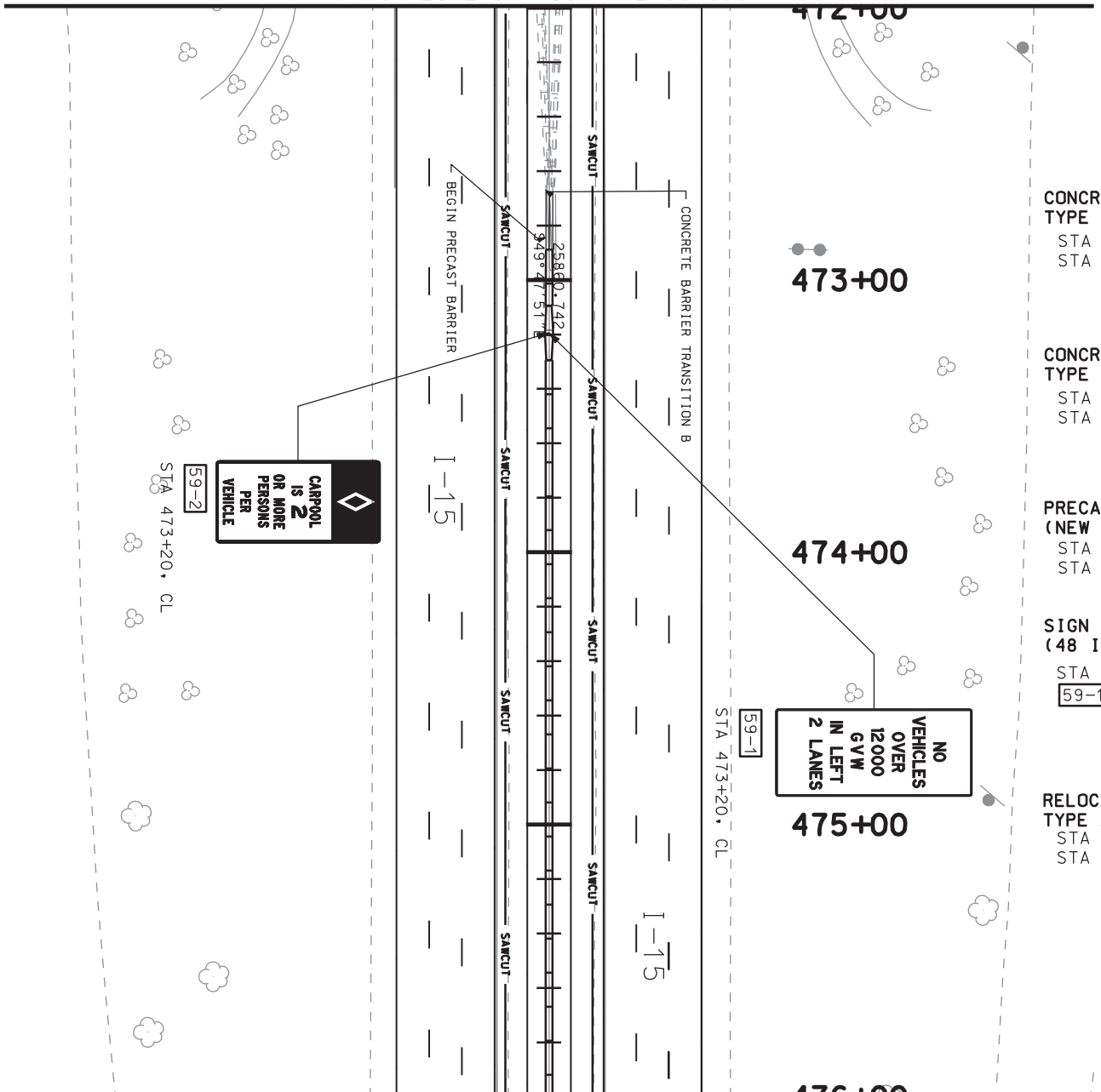


CONCRETE BARRIER TRANSITION TYPE C REQ'D
STA 473+10, CL TO
STA 473+30, CL

CONCRETE BARRIER TRANSITION TYPE B REQ'D
STA 472+70, CL TO
STA 472+90, CL

PRECAST CONCRETE FULL BARRIER (NEW JERSEY SHAPE) REQ'D
STA 472+90, CL TO
STA 504+00, 3.5 RT

SIGN TYPE P-1 REQ'D (48 INCH X 84 INCH)
STA 473+20, CL
59-1

RELOCATE CRASH CUSHION TYPE A REQ'D
STA 472+70, CL TO
STA 534+20, CL

SIGN TYPE P-1 REQ'D (48 INCH X 96 INCH)
STA 473+20, CL
59-2

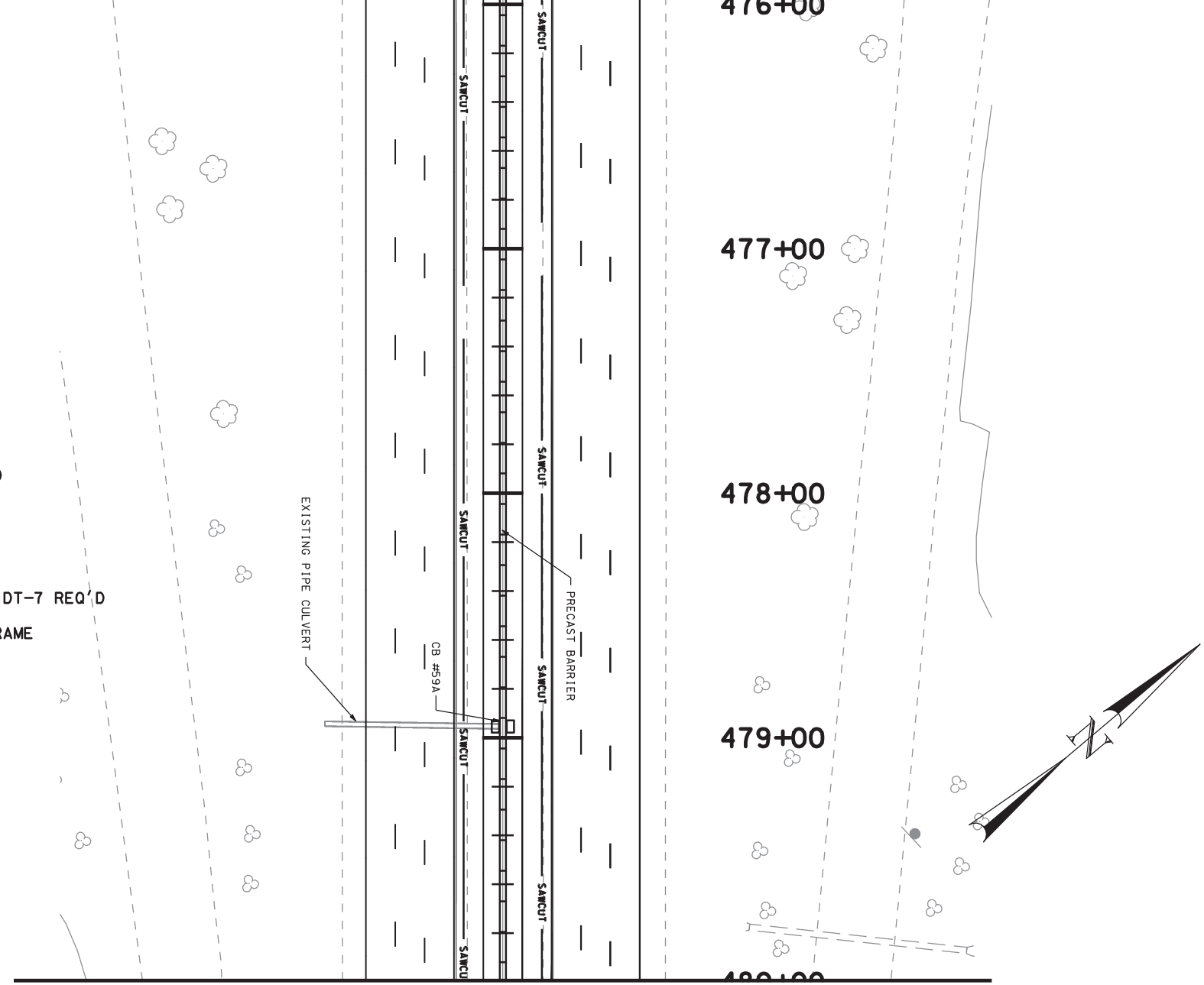


**REMOVE CATCH BASIN REQ'D**
STA 478+96, CL

**CATCH BASIN NO. 59A**
**CATCH BASIN, DETAIL DWG DT-7 REQ'D**
**(SEE SHEET DT-7)**
**RECTANGULAR GRATE AND FRAME**
**(STANDARD GRATING)**
**STD DWG GF3 REQ'D (2).**
STA 478+96, CL
TOB EL=4463.60
EXIST EL=4461.00

MATCH LINE STATION 480+00.000
SEE SHEET RD60

| | | | | | | |
|---|---|---|---|---|---|---|
| SHEET NO. RD-59 | UTAH COUNTY | I-15; CORRIDOR IN UTAH COUNTY | UTAH DEPARTMENT OF TRANSPORTATION | | | |
| | | | REGION THREE -- OREM CITY, UTAH | | | |
| | | PLAN SHEET | ROADWAY DESIGN | | | |
| | | | APPROVAL RECOMM. DATE / PROJECT DESIGN ENGINEER | DESIGN JAH 02-05 | CHECK SMM 02-05 | REVIEW |
| | | PROJECT NUMBER SP-15-6(52)241 | APPROVED FOR USE BY UDOT DATE / PRECONSTRUCTION ENGINEER | DRAWN JAH 02-05 | CHECK SMM 02-05 | DATE |
| | | | | QUANT. JAH 02-05 | CHECK SMM 02-05 | BY |

| NO. | DATE | DESIGN REV. BY | MAPS CORR. BY | PARCELS AFFECTED | REQUEST BY | REMARKS |
|---|---|---|---|---|---|---|
| | | ORIGINAL SUBMISSION FOR AUTHORIZATION | | | | |
| DATE | | REVISIONS | | | | |

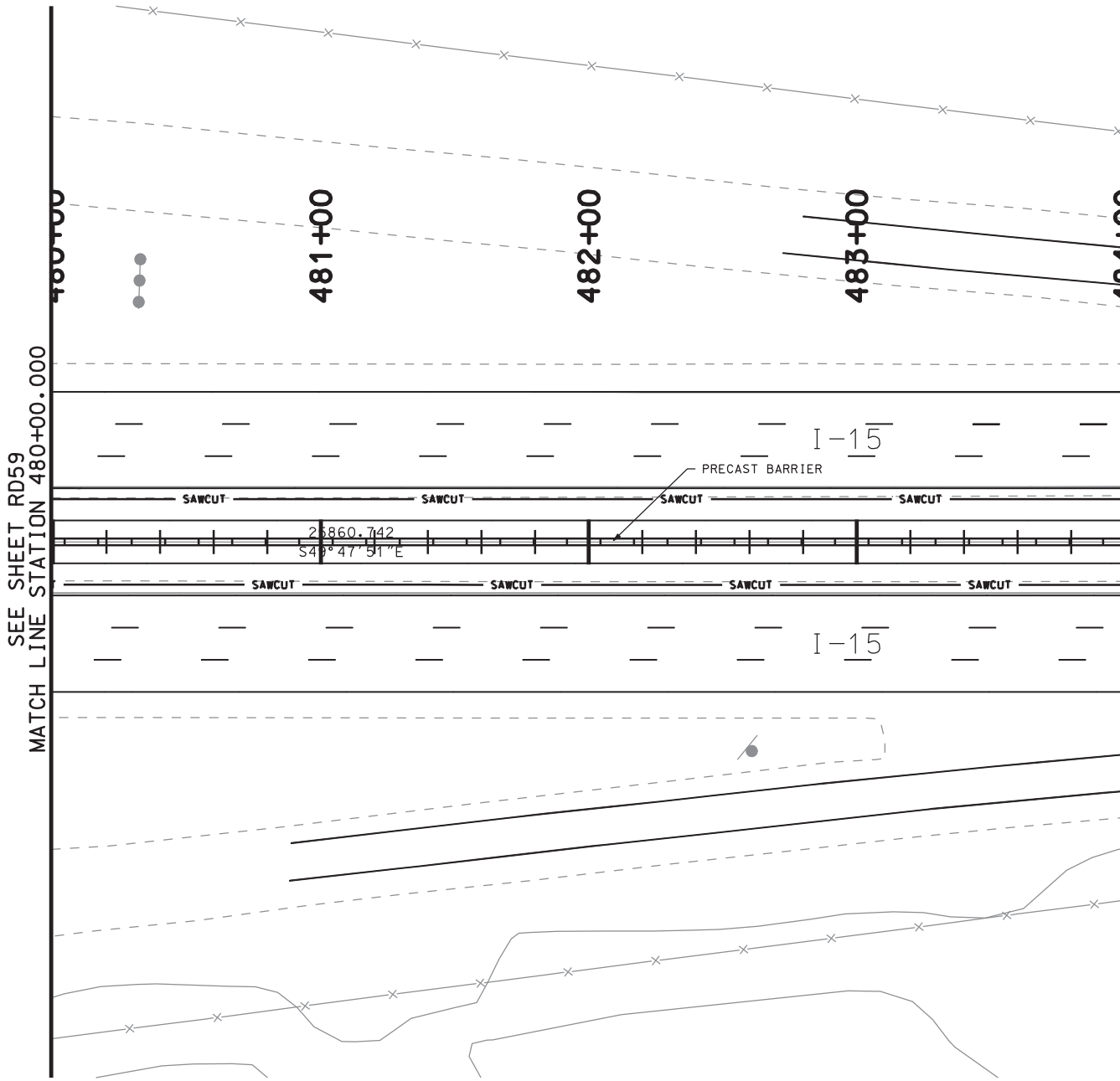


DGN File:IP_PWPsdms1715\RD-060.dgn

02-MAY-2005

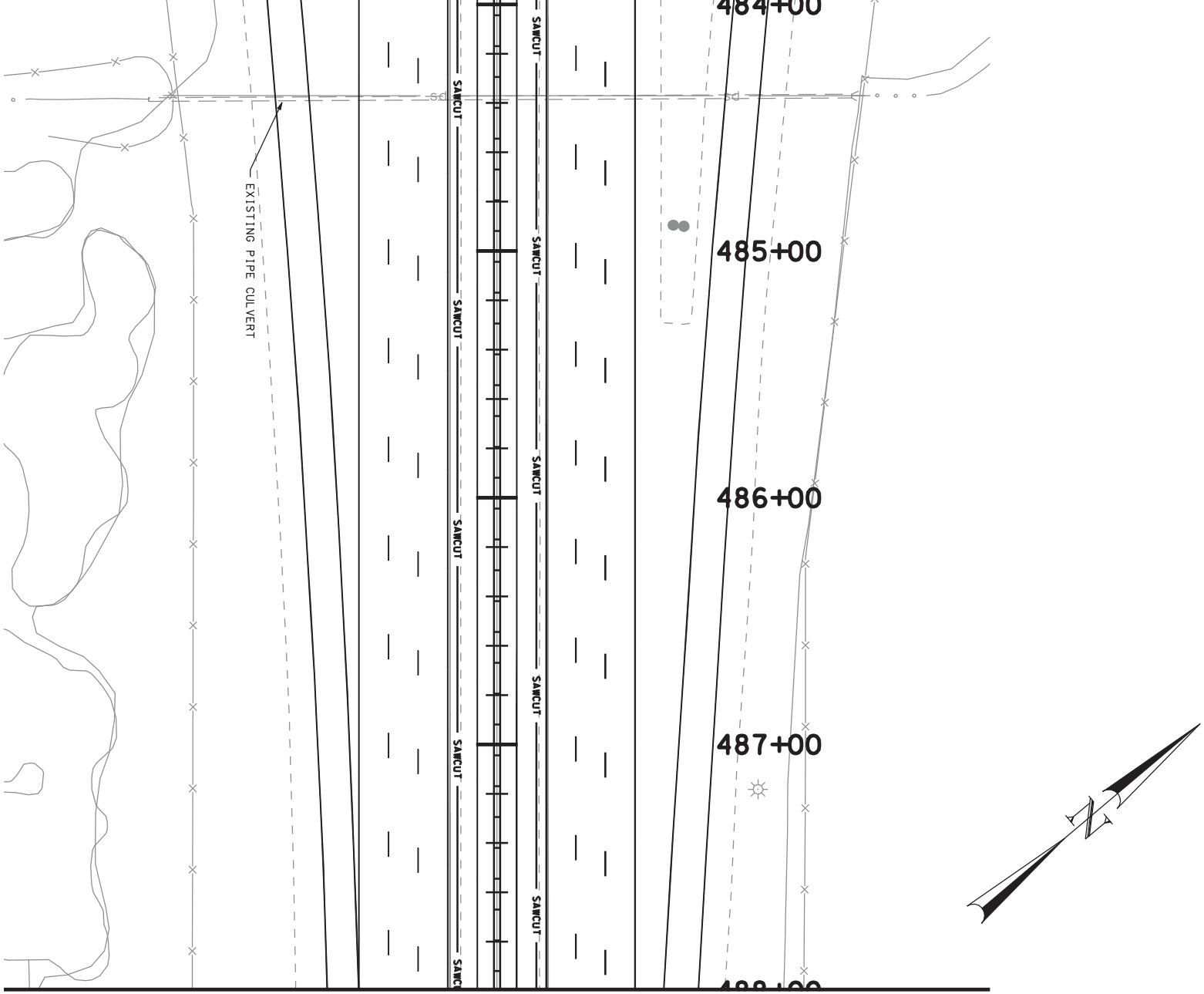


MATCH LINE STATION 488+00.000
SEE SHEET RD61

| | | | | | | |
|---|---|---|---|---|---|---|
| I-15; CORRIDOR | UTAH DEPARTMENT OF TRANSPORTATION | | | | | |
| IN UTAH COUNTY | REGION THREE -- OREM CITY, UTAH | | | | | |
| PLAN SHEET | ROADWAY DESIGN | | | | | |
| | APPROVAL RECOMM. ____ DATE ____ PROJECT DESIGN ENGINEER | DESIGN JAH 02-05 | CHECK SMM 02-05 | REVIEW | | |
| PROJECT NUMBER SP-15-6(52)241 | APPROVED FOR USE BY UDOT ____ DATE ____ PRECONSTRUCTION ENGINEER | DRAWN JAH 02-05 | CHECK SMM 02-05 | DATE ____ | | |
| | | QUANT. JAH 02-05 | CHECK SMM 02-05 | BY ____ | | |

| NO. | DATE | DESIGN REV. BY | MAPS CORR. BY | PARCELS AFFECTED | REQUEST BY | REMARKS |
|---|---|---|---|---|---|---|
| | | ORIGINAL SUBMISSION FOR AUTHORIZATION | | | | |
| | DATE | REVISIONS | | | | |

UTAH COUNTY

SHEET NO. RD-60

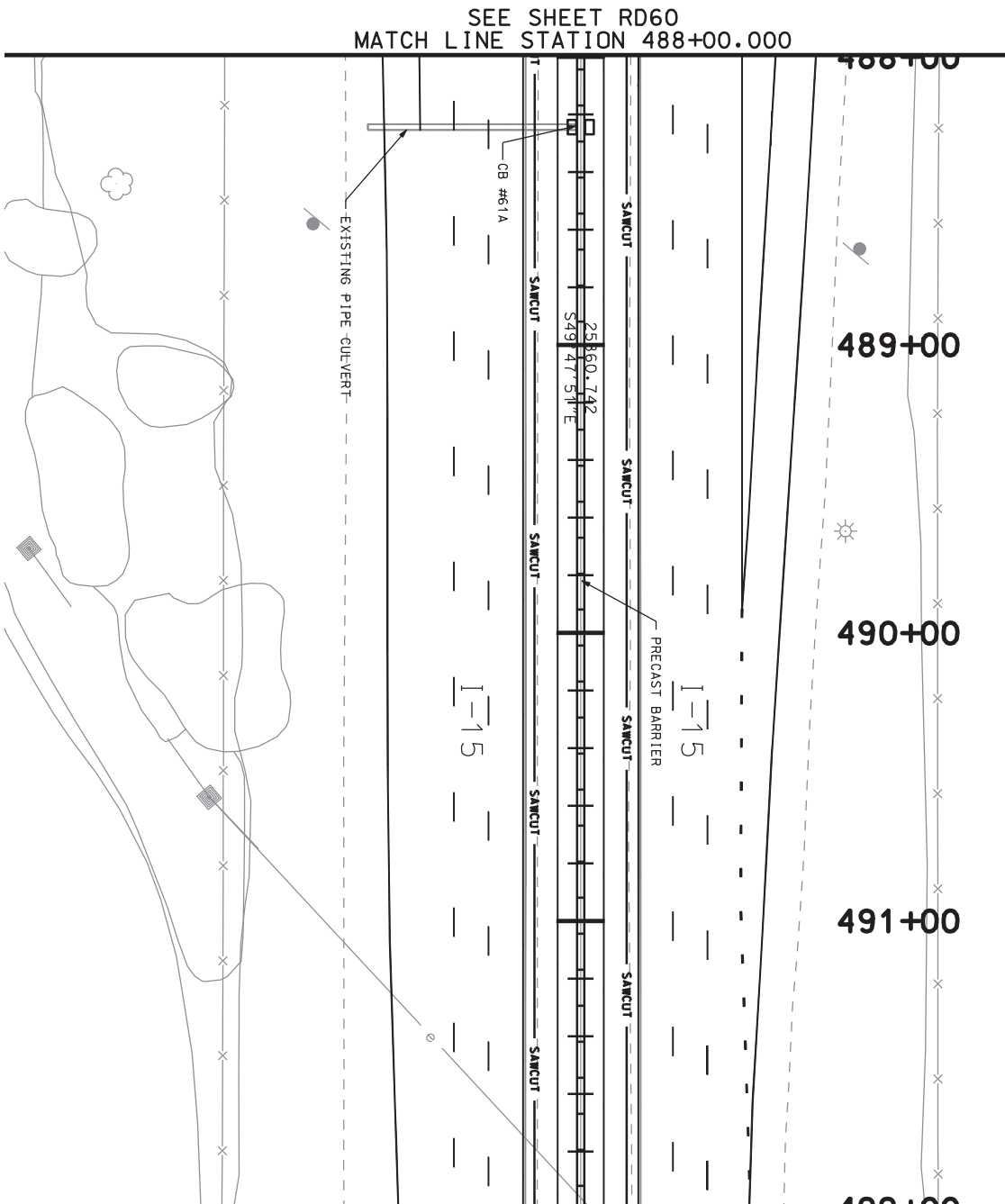


CATCH BASIN NO. 61A
CATCH BASIN, DETAIL DWG DT-7 REQ'D
(SEE SHEET DT-7)
RECTANGULAR GRATE AND FRAME
(STANDARD GRATING)
STD DWG GF3 REQ'D (2).

STA 488+25, CL
TOB EL=4458.70
EXIST EL=4456.10

REMOVE CATCH BASIN REQ'D

STA 488+25, CL

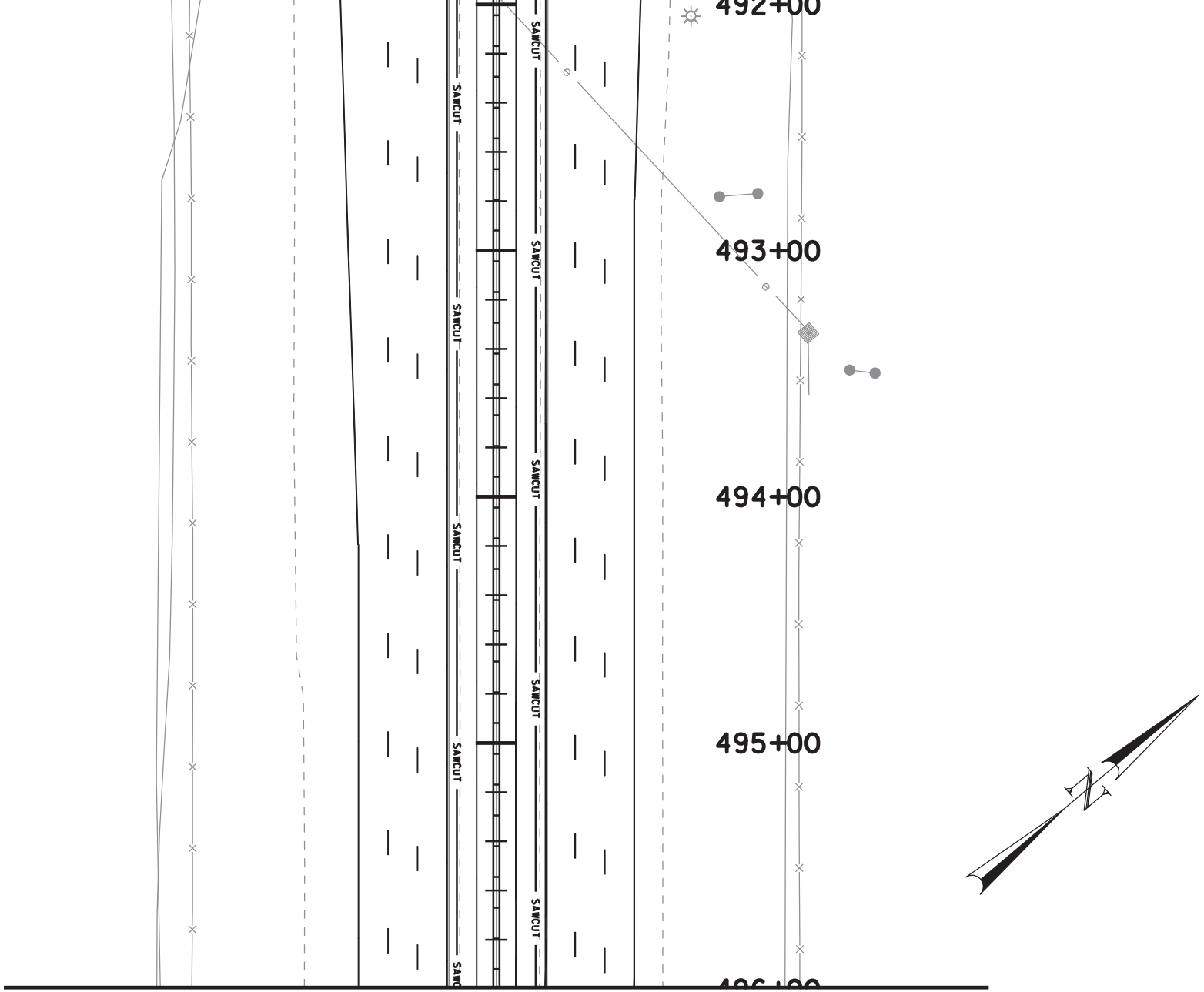


MATCH LINE STATION 496+00.000
SEE SHEET RD62

| | | | | | | |
|---|---|---|---|---|---|---|
| SHEET NO. RD-61 | UTAH COUNTY | I-15; CORRIDOR IN UTAH COUNTY | UTAH DEPARTMENT OF TRANSPORTATION<br>REGION THREE -- OREM CITY, UTAH<br>ROADWAY DESIGN | | | |
| | | PLAN SHEET | APPROVAL RECOMM. ____ DATE ____ PROJECT DESIGN ENGINEER | DESIGN JAH 02-05 | CHECK SMM 02-05 | REVIEW |
| | | PROJECT NUMBER SP-15-6(52)241 | APPROVED FOR USE BY UDOT ____ DATE ____ PRECONSTRUCTION ENGINEER | DRAWN JAH 02-05 | CHECK SMM 02-05 | DATE ____ |
| | | | | QUANT. JAH 02-05 | CHECK SMM 02-05 | BY ____ |

| NO. | DATE | DESIGN REV. BY | MAPS CORR. BY | PARCELS AFFECTED | REQUEST BY | REMARKS |
|---|---|---|---|---|---|---|
| | | ORIGINAL SUBMISSION FOR AUTHORIZATION | | | | |
| | DATE | REVISIONS | | | | |

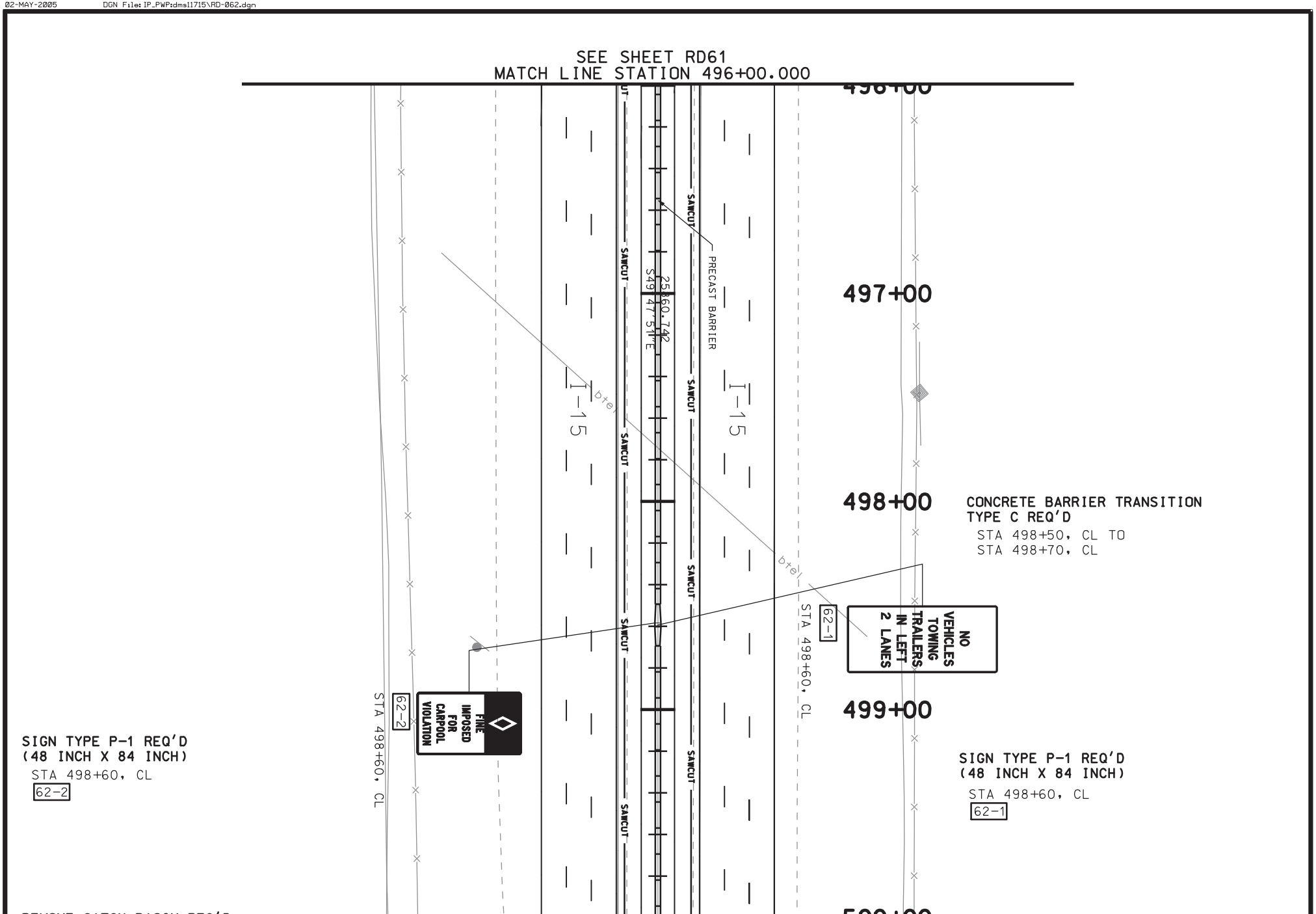
SEE SHEET RD61
MATCH LINE STATION 496+00.000
496+00
497+00
498+00
499+00
500+00
I-15
I-15
PRECAST BARRIER
SAWCUT
S49°47'51"E
2560.742
btel
STA 498+60, CL
62-1
NO VEHICLES TOWING TRAILERS IN LEFT 2 LANES
CONCRETE BARRIER TRANSITION TYPE C REQ'D
STA 498+50, CL TO
STA 498+70, CL
SIGN TYPE P-1 REQ'D
(48 INCH X 84 INCH)
STA 498+60, CL
62-1
FINE IMPOSED FOR CARPOOL VIOLATION
62-2
STA 498+60, CL
SIGN TYPE P-1 REQ'D
(48 INCH X 84 INCH)
STA 498+60, CL
62-2

REMOVE CATCH BASIN REQ'D
STA 500+96, CL

CATCH BASIN NO. 62A
CATCH BASIN, DETAIL DWG DT-7 REQ'D
(SEE SHEET DT-7)
RECTANGULAR GRATE AND FRAME
(STANDARD GRATING)
STD DWG GF3 REQ'D (2).
STA 500+96, CL
TOB EL=4451.60
EXIST EL=4448.99

CATCH BASIN NO. 62B
CATCH BASIN, DETAIL DWG DT-7 REQ'D

(SEE SHEET DT-7)
RECTANGULAR GRATE AND FRAME
(STANDARD GRATING)
STD DWG GF3 REQ'D (2).
STA 501+91, CL
TOB ELEV = 4451.30

18 INCH PIPE CULVERT,
CLASS A REQ'D
STA 500+96, CL
TO STA 501+91, CL
OUTLET ELEV = 4497.00
INLET ELEV = 4448.30

REMOVE PRECAST CONCRETE
BARRIER REQ'D
STA 503+00, RT TO
MATCH LINE STA 504+00, RT

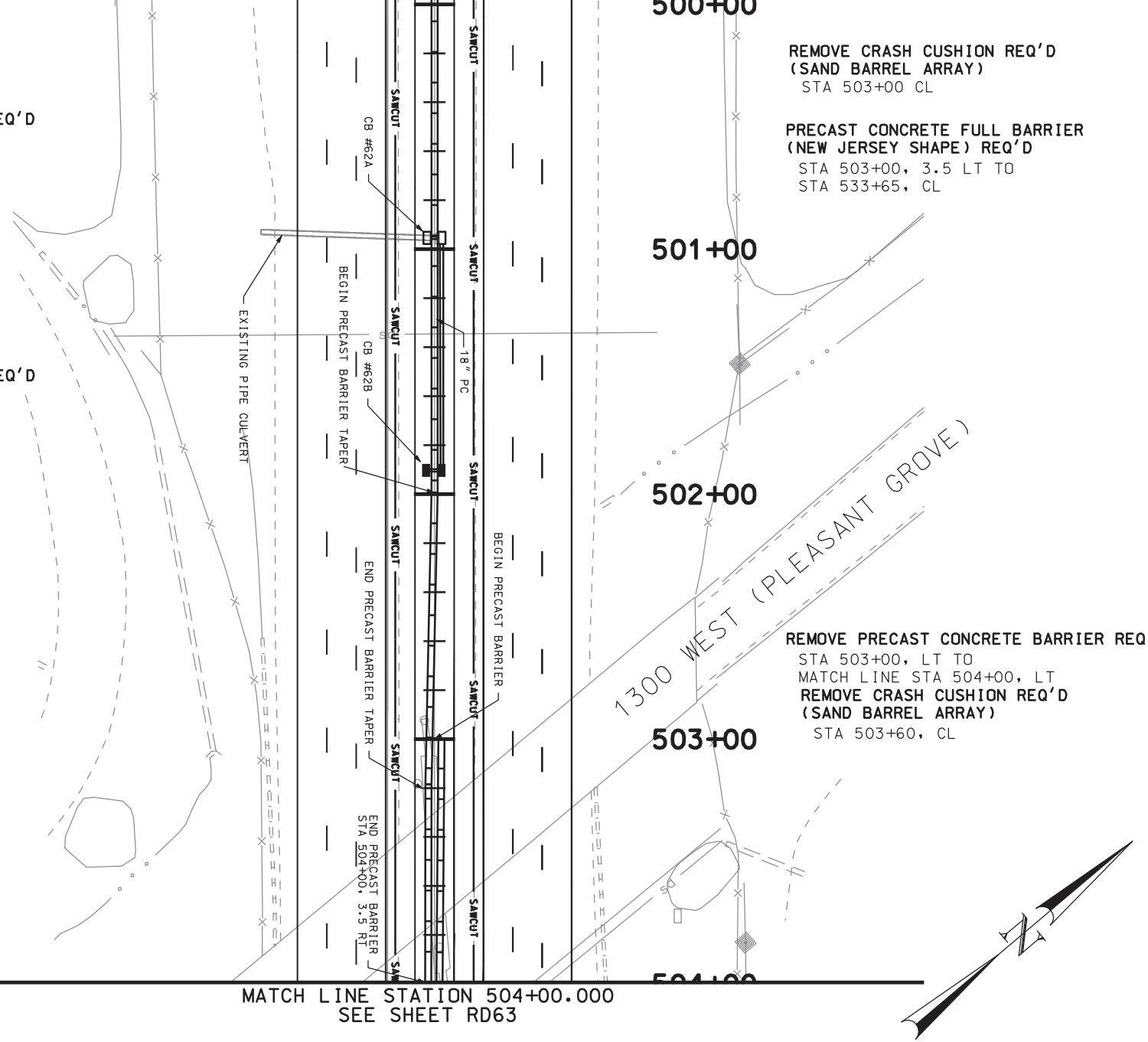


REMOVE CRASH CUSHION REQ'D
(SAND BARREL ARRAY)
STA 503+00 CL

PRECAST CONCRETE FULL BARRIER
(NEW JERSEY SHAPE) REQ'D
STA 503+00, 3.5 LT TO
STA 533+65, CL

REMOVE PRECAST CONCRETE BARRIER REQ'D
STA 503+00, LT TO
MATCH LINE STA 504+00, LT
REMOVE CRASH CUSHION REQ'D
(SAND BARREL ARRAY)
STA 503+60, CL

MATCH LINE STATION 504+00.000
SEE SHEET RD63

SHEET NO. RD-62
UTAH COUNTY

I-15; CORRIDOR
IN UTAH COUNTY
PLAN SHEET

PROJECT NUMBER SP-15-6(52)241

UTAH DEPARTMENT OF TRANSPORTATION
REGION THREE -- OREM CITY, UTAH
ROADWAY DESIGN

APPROVAL RECOMM. DATE PROJECT DESIGN ENGINEER
APPROVED FOR USE BY UDOT DATE PRECONSTRUCTION ENGINEER

DESIGN JAH 02-05 CHECK SMM 02-05 REVIEW
DRAWN JAH 02-05 CHECK SMM 02-05 DATE
QUANT. JAH 02-05 CHECK SMM 02-05 BY

| NO. | DATE | DESIGN REV. BY | MAPS CORR. BY | PARCELS AFFECTED | REQUEST BY | REMARKS |
|---|---|---|---|---|---|---|
| | | ORIGINAL SUBMISSION FOR AUTHORIZATION | | | | |

DATE REVISIONS

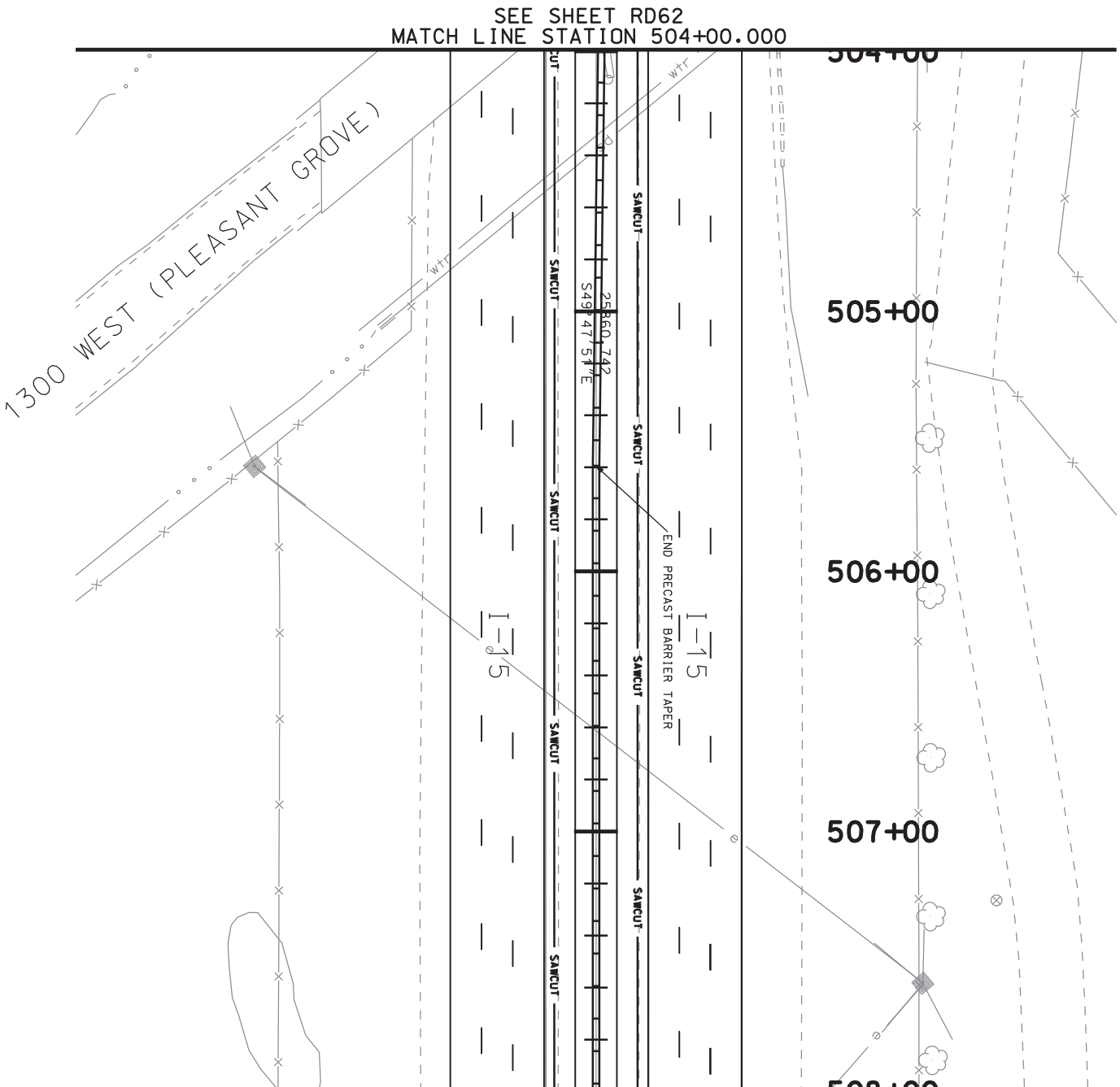
SEE SHEET RD62
MATCH LINE STATION 504+00.000
504+00
505+00
506+00
507+00
508+00
1300 WEST (PLEASANT GROVE)
I-15
I-15
END PRECAST BARRIER TAPER
S49°47'51"E
2560.742
SAWCUT
SAWCUT
SAWCUT
SAWCUT
SAWCUT
SAWCUT
SAWCUT
SAWCUT
WTR
WTR

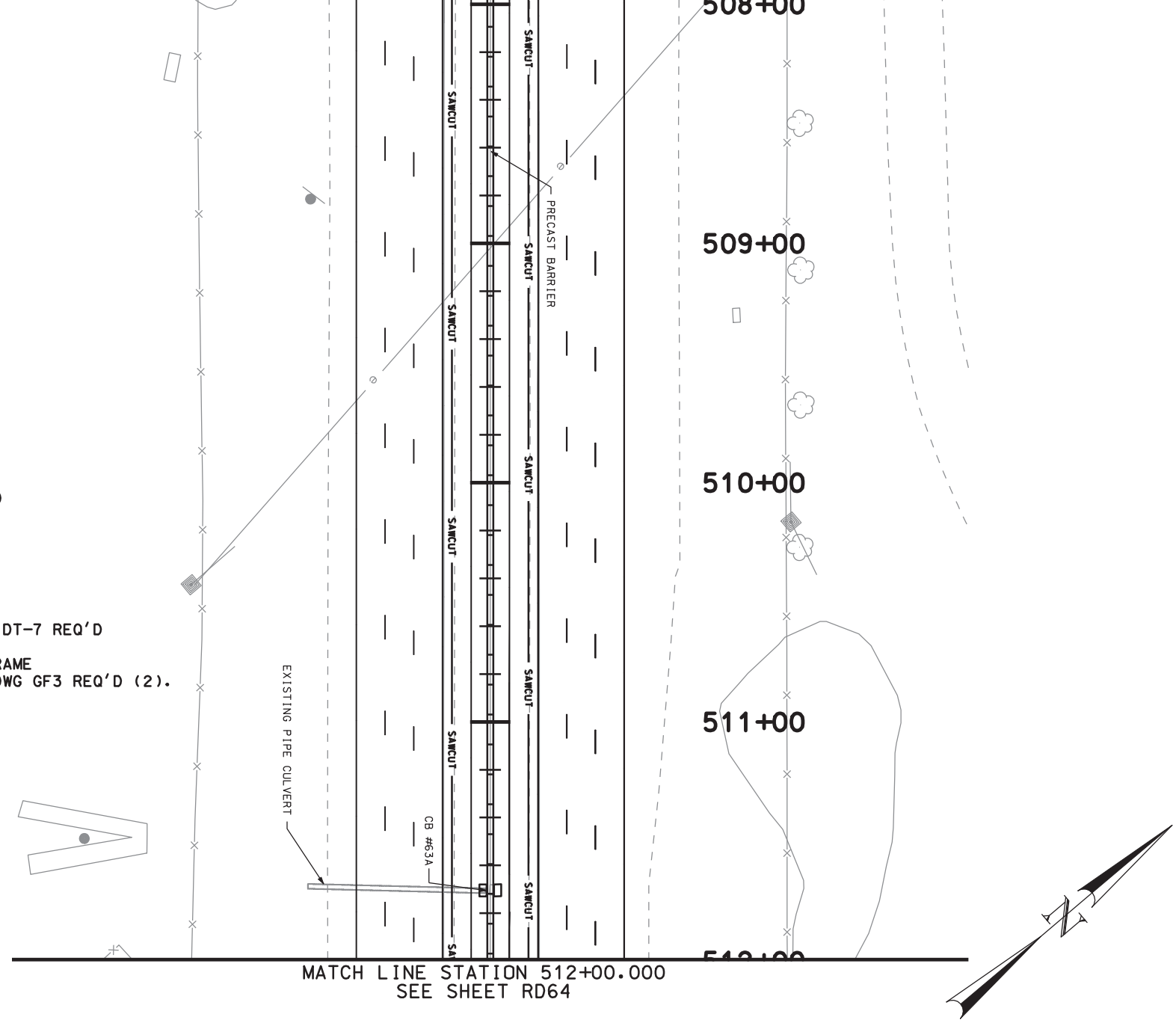


**REMOVE CATCH BASIN REQ'D**
STA 511+71, CL

**CATCH BASIN NO. 63A**
**CATCH BASIN, DETAIL DWG DT-7 REQ'D**
**(SEE SHEET DT-7)**
**RECTANGULAR GRATE AND FRAME**
**(STANDARD GRATING) STD DWG GF3 REQ'D (2).**
STA 511+71, CL
TOB EL=4454.30
EXIST EL=4451.50

| | | | | | | |
|---|---|---|---|---|---|---|
| SHEET NO. RD-63 | UTAH COUNTY | I-15; CORRIDOR IN UTAH COUNTY | UTAH DEPARTMENT OF TRANSPORTATION<br>REGION THREE -- OREM CITY, UTAH<br>ROADWAY DESIGN | | | |
| | | PLAN SHEET | APPROVAL RECOMM. DATE / PROJECT DESIGN ENGINEER | DESIGN JAH 02-05 | CHECK SMM 02-05 | REVIEW |
| | | PROJECT NUMBER SP-15-6(52)241 | APPROVED FOR USE BY UDOT DATE / PRECONSTRUCTION ENGINEER | DRAWN JAH 02-05 | CHECK SMM 02-05 | DATE |
| | | | | QUANT. JAH 02-05 | CHECK SMM 02-05 | BY |

| NO. | DATE | DESIGN REV. BY | MAPS CORR. BY | PARCELS AFFECTED | REQUEST BY | REMARKS |
|---|---|---|---|---|---|---|
| | | ORIGINAL SUBMISSION FOR AUTHORIZATION | | | | |

DATE REVISIONS

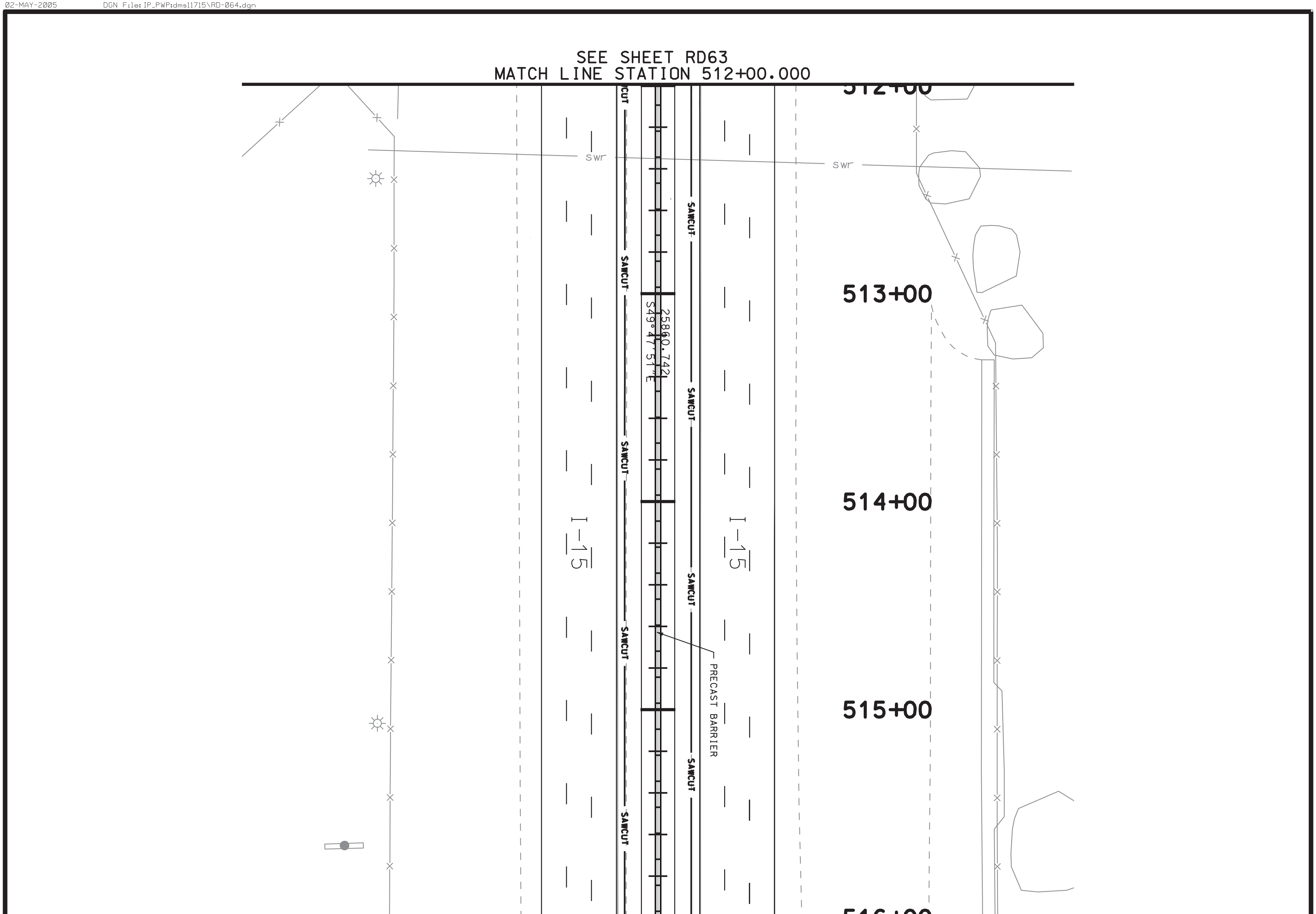
SEE SHEET RD63
MATCH LINE STATION 512+00.000
513+00
514+00
515+00
I-15
I-15
SAWCUT
25860.742
S49°47'51"E
PRECAST BARRIER
swr

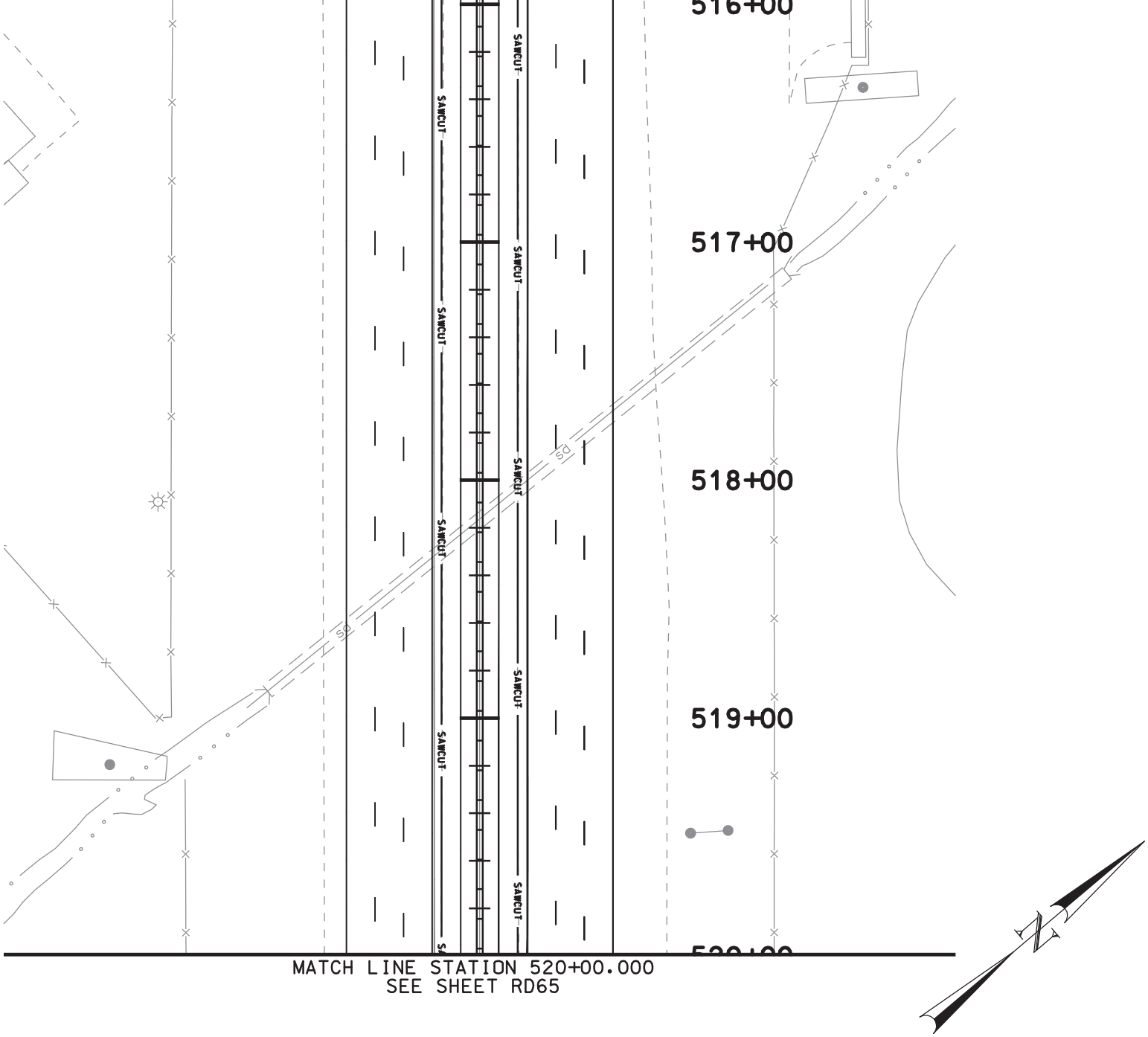


MATCH LINE STATION 520+00.000
SEE SHEET RD65

| | | | | | |
|---|---|---|---|---|---|
| SHEET NO. RD-64 | UTAH COUNTY | I-15; CORRIDOR IN UTAH COUNTY | UTAH DEPARTMENT OF TRANSPORTATION<br>REGION THREE -- OREM CITY, UTAH<br>ROADWAY DESIGN | | |
| | | PLAN SHEET | APPROVAL RECOMM. ____ DATE ____ PROJECT DESIGN ENGINEER | DESIGN JAH 02-05 | CHECK SMM 02-05 | REVIEW |
| | | PROJECT NUMBER SP-15-6(52)241 | APPROVED FOR USE BY UDOT ____ DATE ____ PRECONSTRUCTION ENGINEER | DRAWN JAH 02-05 | CHECK SMM 02-05 | DATE ____ |
| | | | | QUANT. JAH 02-05 | CHECK SMM 02-05 | BY ____ |

| NO. | DATE | DESIGN REV. BY | MAPS CORR. BY | PARCELS AFFECTED | REQUEST BY | REMARKS |
|---|---|---|---|---|---|---|
| | | ORIGINAL SUBMISSION FOR AUTHORIZATION | | | | |
| | DATE | REVISIONS | | | | |

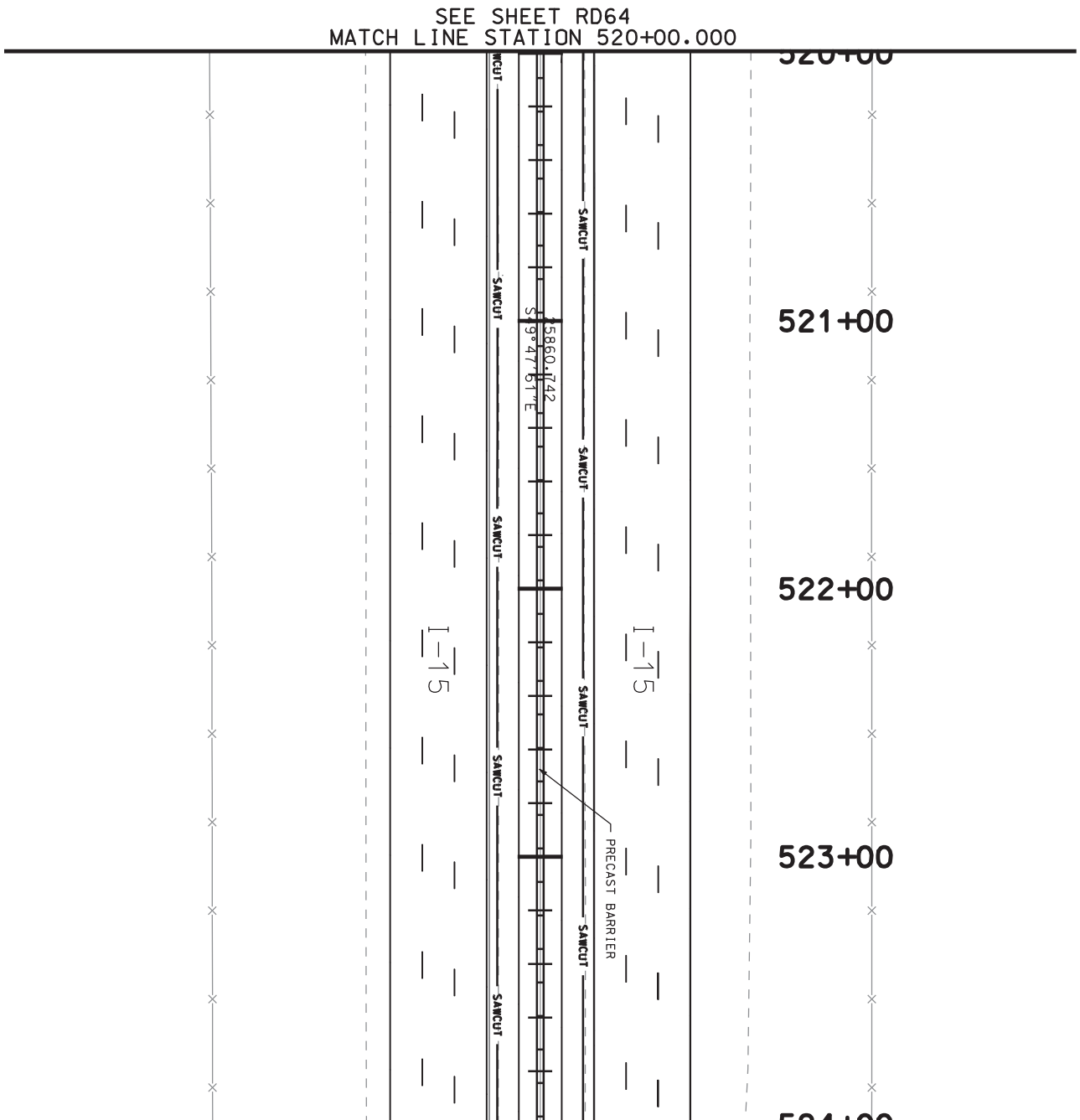
SEE SHEET RD64
MATCH LINE STATION 520+00.000
520+00
521+00
522+00
523+00
524+00
SAWCUT
SAWCUT
SAWCUT
SAWCUT
SAWCUT
SAWCUT
SAWCUT
SAWCUT
I-15
I-15
PRECAST BARRIER
S19°47'01"E
15860.742

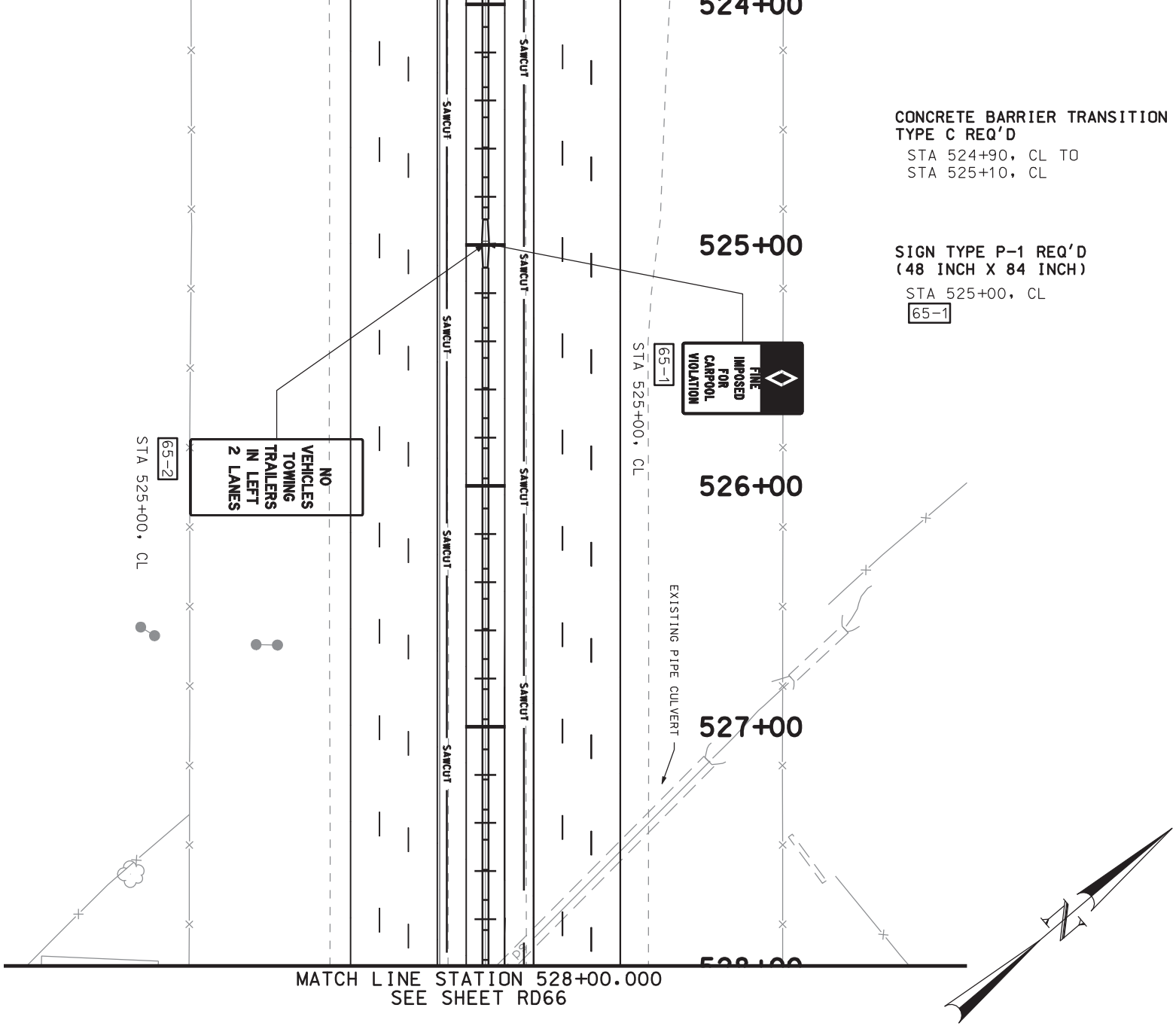


| | | | | | | |
|---|---|---|---|---|---|---|
| I-15; CORRIDOR | UTAH DEPARTMENT OF TRANSPORTATION | | | | | |
| IN UTAH COUNTY | REGION THREE -- OREM CITY, UTAH | | | | | |
| PLAN SHEET | ROADWAY DESIGN | | | | | |
| | APPROVAL RECOMM. DATE / PROJECT DESIGN ENGINEER | DESIGN JAH 02-05 | CHECK SMM 02-05 | REVIEW | | |
| | APPROVED FOR USE BY UDOT DATE / PRECONSTRUCTION ENGINEER | DRAWN JAH 02-05 | CHECK SMM 02-05 | DATE | | |
| PROJECT NUMBER SP-15-6(52)241 | | QUANT. JAH 02-05 | CHECK SMM 02-05 | BY | | |

| NO. | DATE | DESIGN REV. BY | MAPS CORR. BY | PARCELS AFFECTED | REQUEST BY | REMARKS |
|---|---|---|---|---|---|---|
| | | ORIGINAL SUBMISSION FOR AUTHORIZATION | | | | |
| DATE | | REVISIONS | | | | |

SHEET NO. RD-65

UTAH COUNTY

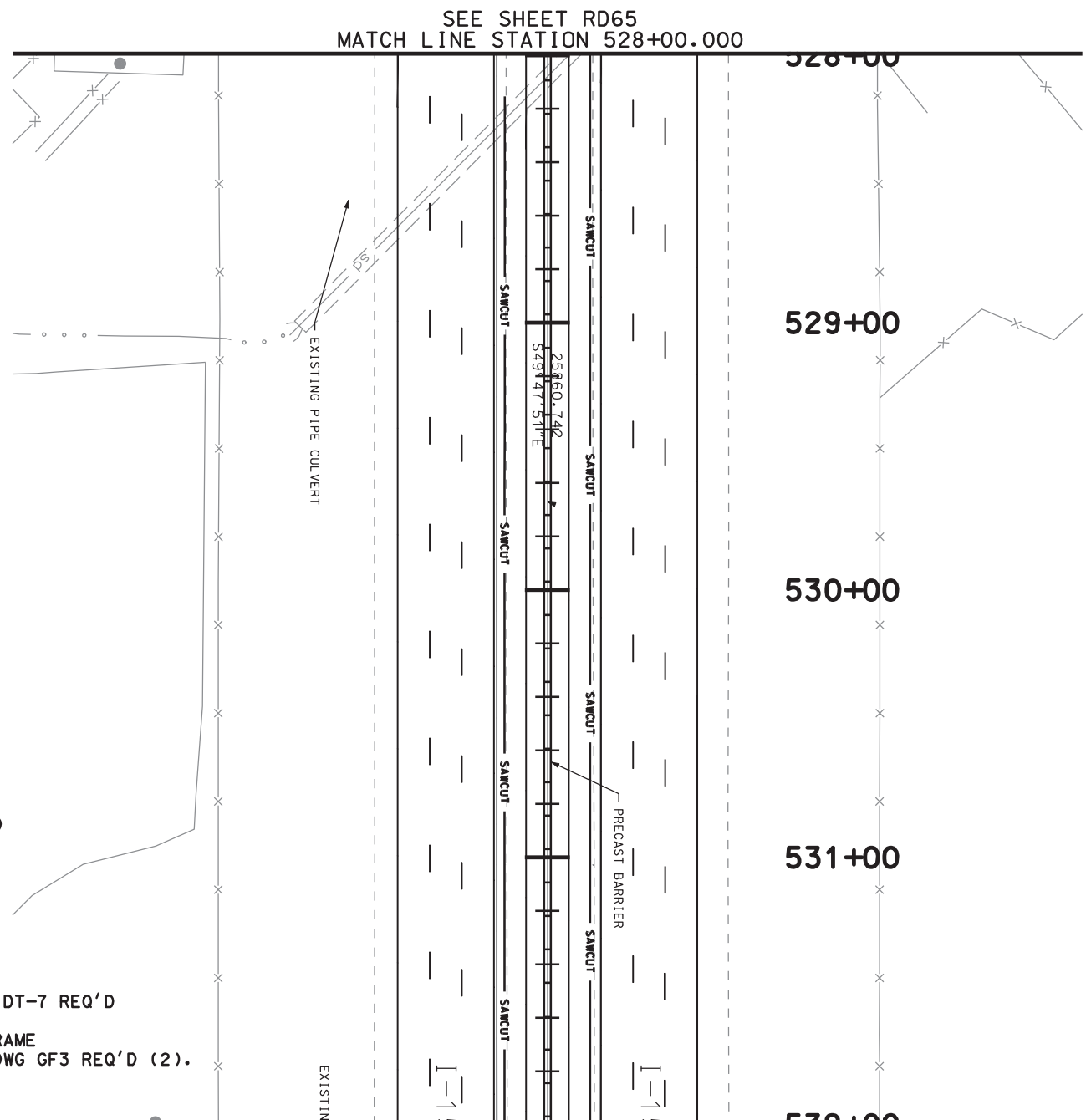


REMOVE CATCH BASIN REQ'D
STA 532+68, CL

CATCH BASIN NO. 66A
CATCH BASIN, DETAIL DWG DT-7 REQ'D
(SEE SHEET DT-7)
RECTANGULAR GRATE AND FRAME
(STANDARD GRATING) STD DWG GF3 REQ'D (2).
STA 532+68, CL
TOB EL=4454.20

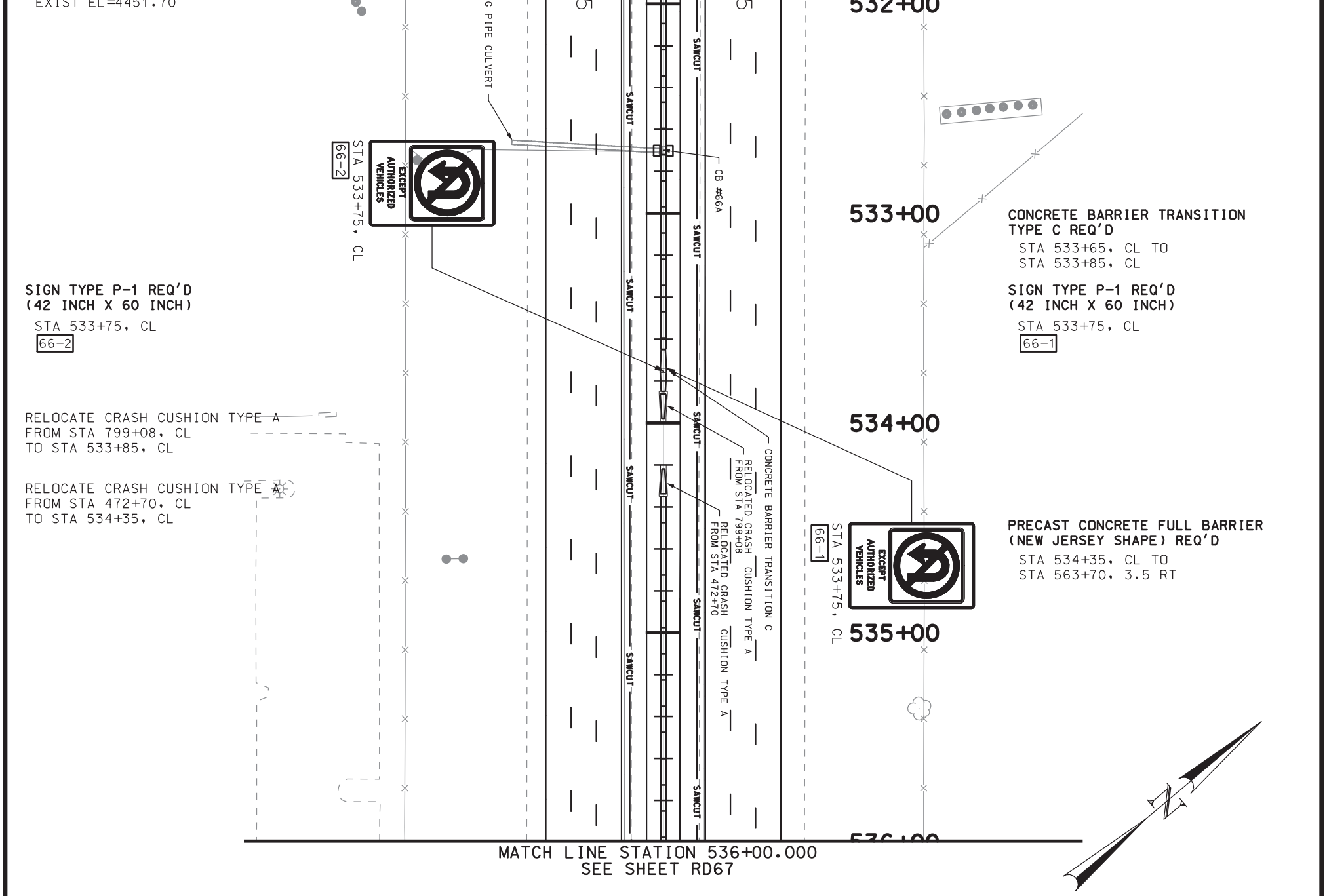


| | | | | | | |
|---|---|---|---|---|---|---|
| I-15; CORRIDOR | UTAH DEPARTMENT OF TRANSPORTATION | | | | | |
| IN UTAH COUNTY | REGION THREE -- OREM CITY, UTAH | | | | | |
| PLAN SHEET | ROADWAY DESIGN | | | | | |
| | APPROVAL RECOMM. DATE / PROJECT DESIGN ENGINEER | DESIGN JAH 02-05 | CHECK SMM 02-05 | REVIEW | | |
| PROJECT NUMBER SP-15-6(52)241 | APPROVED FOR USE BY UDOT DATE / PRECONSTRUCTION ENGINEER | DRAWN JAH 02-05 | CHECK SMM 02-05 | DATE | | |
| | | QUANT. JAH 02-05 | CHECK SMM 02-05 | BY | | |

| NO. | DATE | DESIGN REV. BY | MAPS CORR. BY | PARCELS AFFECTED | REQUEST BY | REMARKS |
|---|---|---|---|---|---|---|
| | | ORIGINAL SUBMISSION FOR AUTHORIZATION | | | | |

DATE REVISIONS

UTAH COUNTY

SHEET NO. RD-66

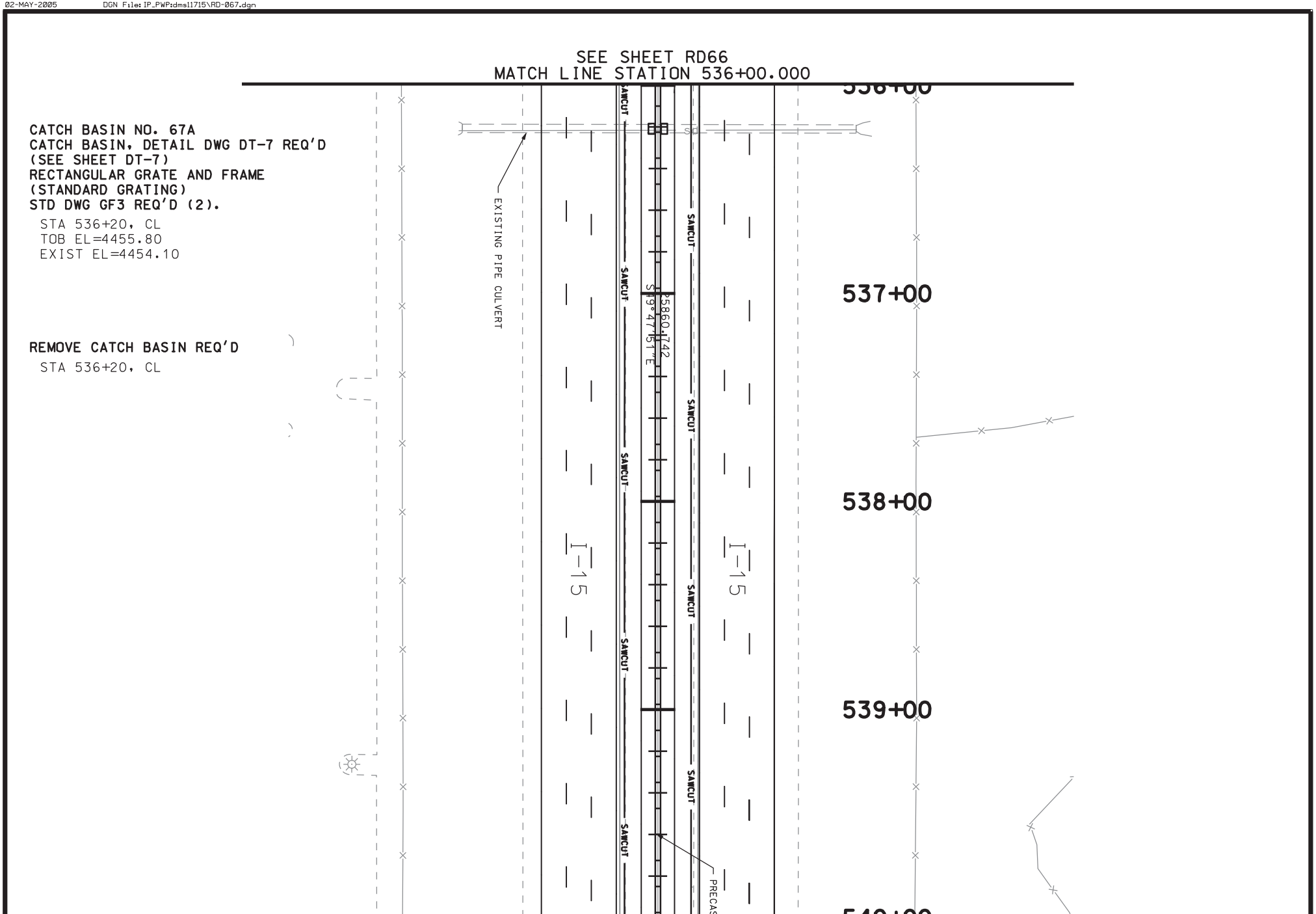
SEE SHEET RD66
MATCH LINE STATION 536+00.000
CATCH BASIN NO. 67A
CATCH BASIN, DETAIL DWG DT-7 REQ'D
(SEE SHEET DT-7)
RECTANGULAR GRATE AND FRAME
(STANDARD GRATING)
STD DWG GF3 REQ'D (2).
STA 536+20, CL
TOB EL=4455.80
EXIST EL=4454.10
REMOVE CATCH BASIN REQ'D
STA 536+20, CL
EXISTING PIPE CULVERT
SAWCUT
S19°47'51"E
25860.742
I-15
PRECAST
537+00
538+00
539+00

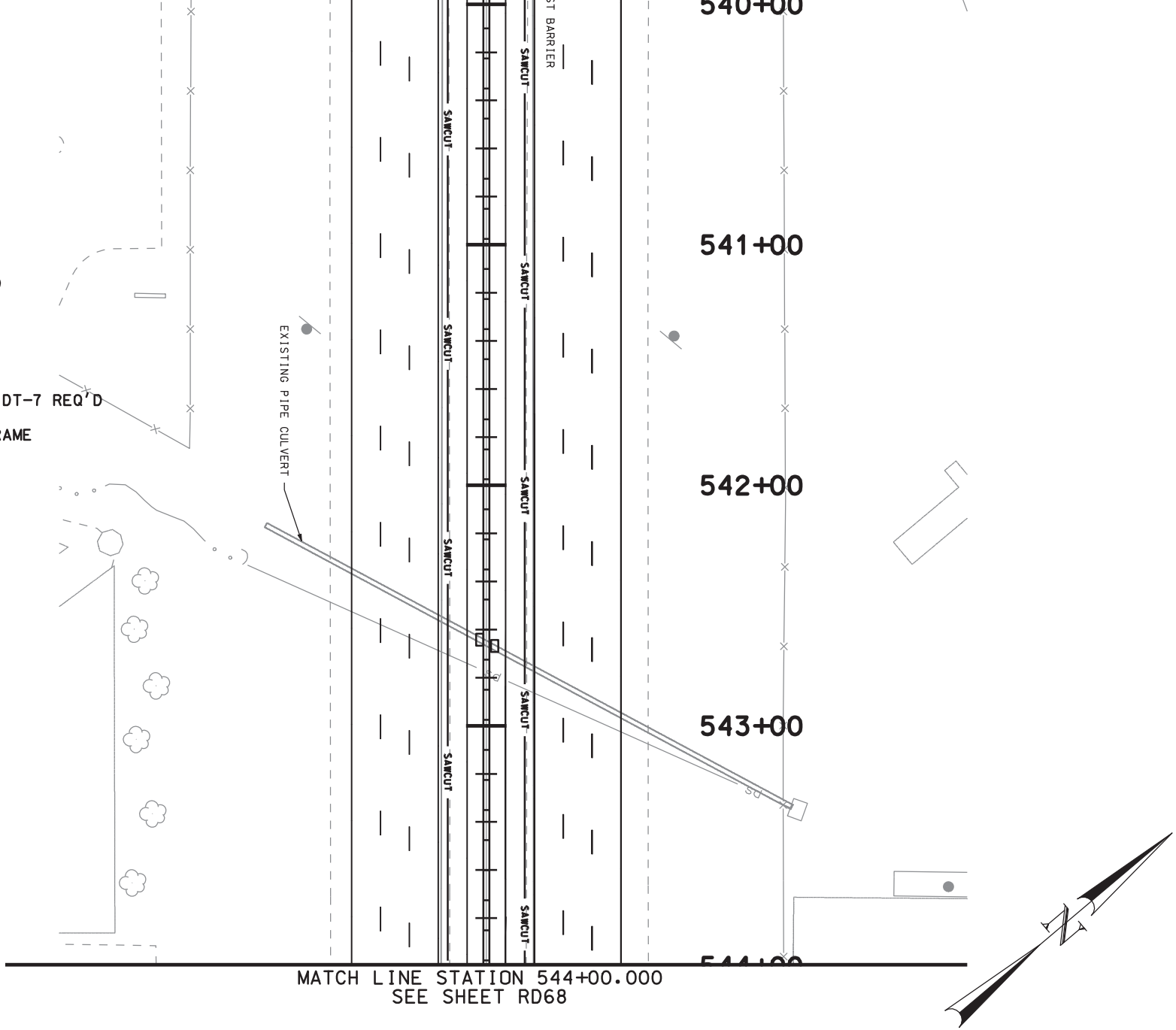


**REMOVE CATCH BASIN REQ'D**
STA 542+65, CL

**CATCH BASIN NO. 67B**
**CATCH BASIN, DETAIL DWG DT-7 REQ'D**
**(SEE SHEET DT-7)**
**RECTANGULAR GRATE AND FRAME**
**(STANDARD GRATING)**
**STD DWG GF3 REQ'D (2).**
STA 542+65, CL
TOB EL=4461.26
EXIST EL=4458.84

MATCH LINE STATION 544+00.000
SEE SHEET RD68

SHEET NO. RD-67

UTAH COUNTY

I-15; CORRIDOR
IN UTAH COUNTY
PLAN SHEET

PROJECT NUMBER SP-15-6(52)241

UTAH DEPARTMENT OF TRANSPORTATION
REGION THREE -- OREM CITY, UTAH
ROADWAY DESIGN

APPROVAL RECOMM. ____ DATE ____ PROJECT DESIGN ENGINEER
APPROVED FOR USE BY UDOT ____ DATE ____ PRECONSTRUCTION ENGINEER

DESIGN JAH 02-05 CHECK SMM 02-05 REVIEW
DRAWN JAH 02-05 CHECK SMM 02-05 DATE ____
QUANT. JAH 02-05 CHECK SMM 02-05 BY ____

| NO. | DATE | DESIGN REV. BY | MAPS CORR. BY | PARCELS AFFECTED | REQUEST BY | REMARKS |
|---|---|---|---|---|---|---|
| | | ORIGINAL SUBMISSION FOR AUTHORIZATION | | | | |

DATE REVISIONS

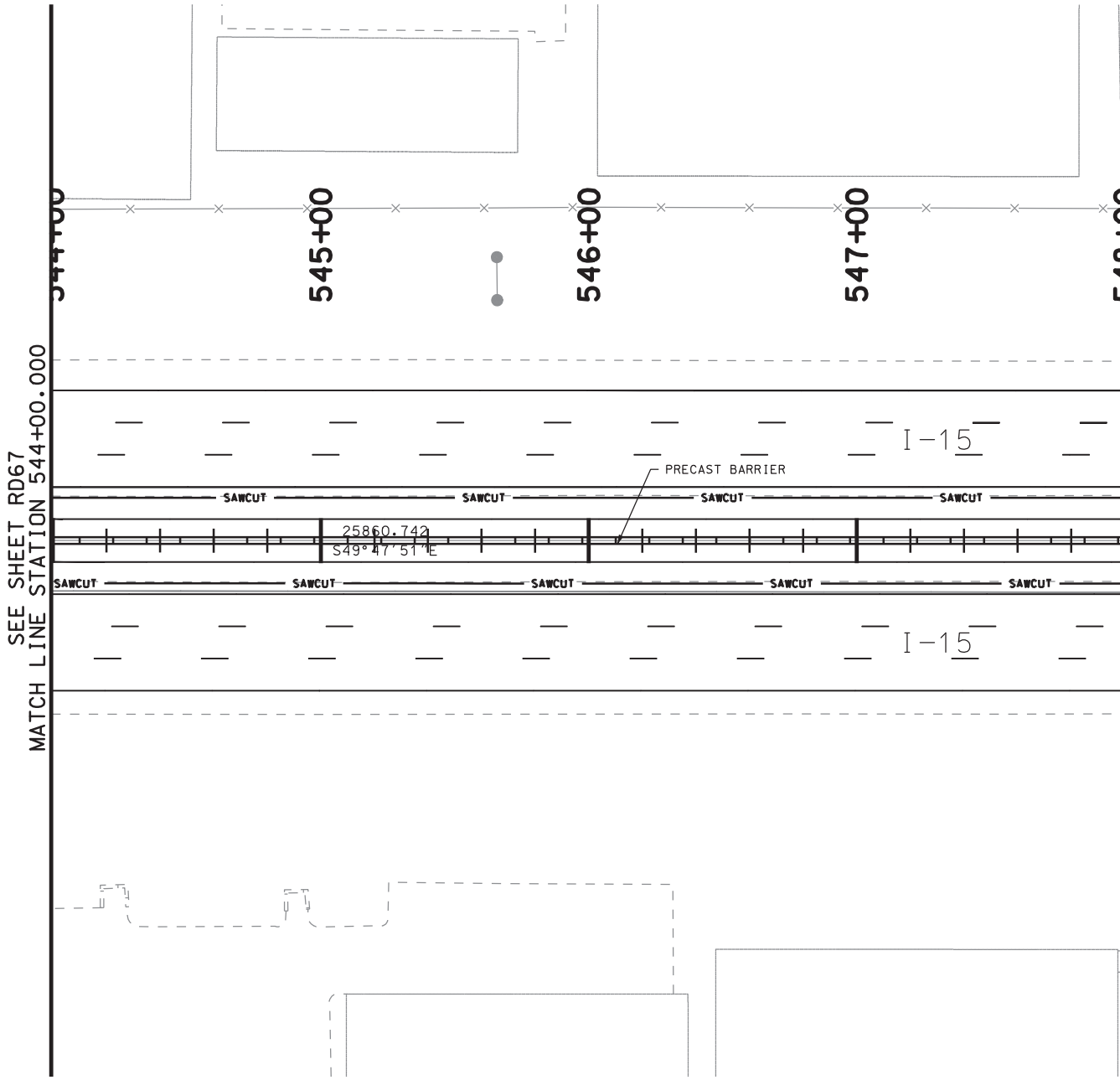


DGN File:IP_PWpdms11715\RD-068.dgn

02-MAY-2005

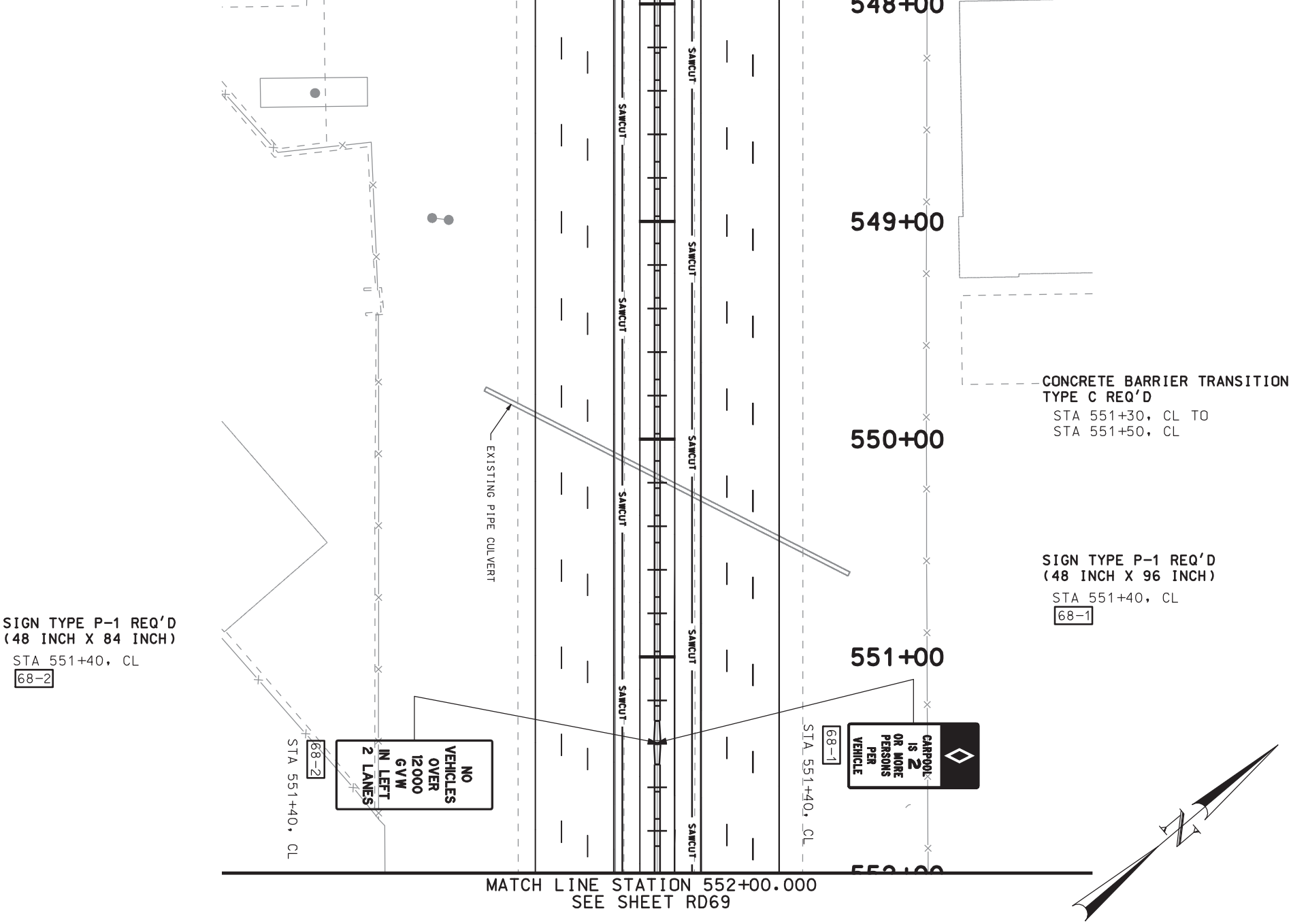


| | | | | | |
|---|---|---|---|---|---|
| I-15; CORRIDOR | UTAH DEPARTMENT OF TRANSPORTATION | | | | |
| IN UTAH COUNTY | REGION THREE -- OREM CITY, UTAH | | | | |
| PLAN SHEET | ROADWAY DESIGN | | | | |
| | APPROVAL RECOMM. ____ DATE ____ PROJECT DESIGN ENGINEER | DESIGN JAH 02-05 | CHECK SMM 02-05 | REVIEW | |
| | | DRAWN JAH 02-05 | CHECK SMM 02-05 | DATE ____ | |
| PROJECT NUMBER SP-15-6(52)241 | APPROVED FOR USE BY UDOT ____ DATE ____ PRECONSTRUCTION ENGINEER | QUANT. JAH 02-05 | CHECK SMM 02-05 | BY ____ | |

| NO. | DATE | DESIGN REV. BY | MAPS CORR. BY | PARCELS AFFECTED | REQUEST BY | REMARKS |
|---|---|---|---|---|---|---|
| | | ORIGINAL SUBMISSION FOR AUTHORIZATION | | | | |
| | DATE | REVISIONS | | | | |

UTAH COUNTY

SHEET NO. RD-68

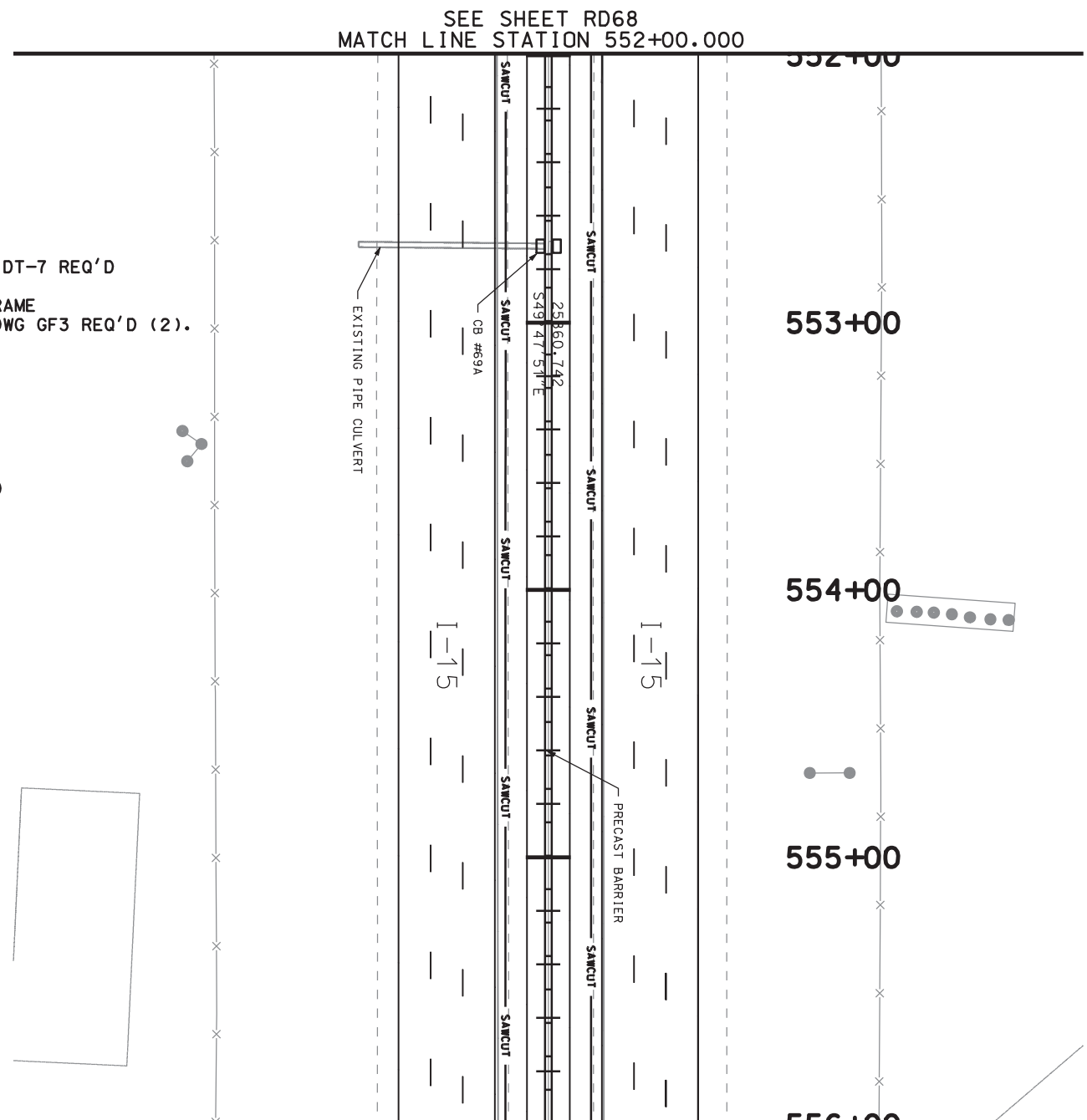


CATCH BASIN NO. 69A
CATCH BASIN, DETAIL DWG DT-7 REQ'D
(SEE SHEET DT-7)
RECTANGULAR GRATE AND FRAME
(STANDARD GRATING) STD DWG GF3 REQ'D (2).
STA 552+72, CL
TOB EL=4469.70
EXIST EL=4466.90

REMOVE CATCH BASIN REQ'D
STA 552+72, CL

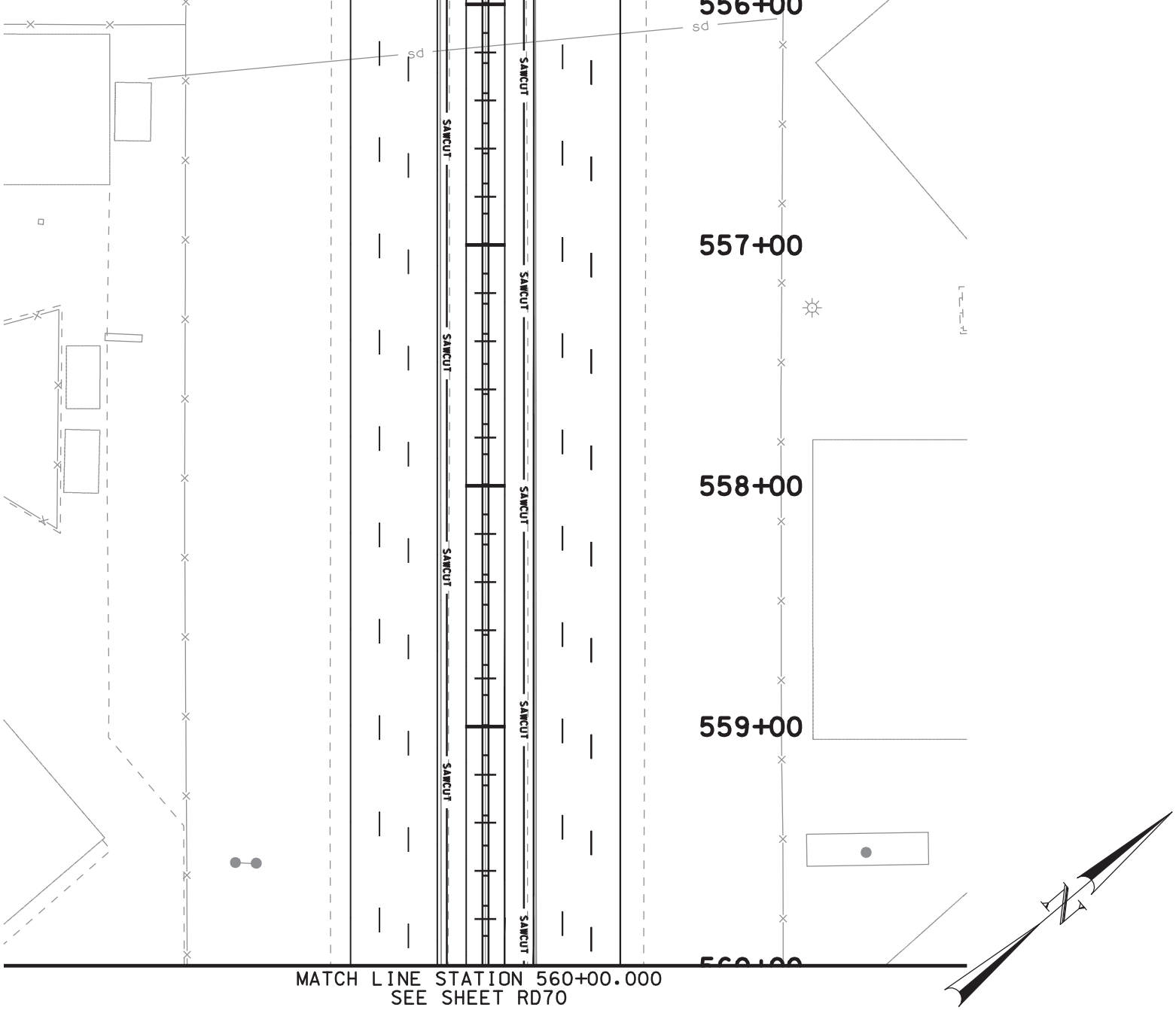


MATCH LINE STATION 560+00.000
SEE SHEET RD70

| | | | | | | |
|---|---|---|---|---|---|---|
| I-15; CORRIDOR | UTAH DEPARTMENT OF TRANSPORTATION | | | | | |
| IN UTAH COUNTY | REGION THREE -- OREM CITY, UTAH | | | | | |
| PLAN SHEET | ROADWAY DESIGN | | | | | |
| | APPROVAL RECOMM. ____ DATE ____ PROJECT DESIGN ENGINEER | DESIGN JAH 02-05 | CHECK SMM 02-05 | REVIEW | | |
| PROJECT NUMBER SP-15-6(52)241 | APPROVED FOR USE BY UDOT ____ DATE ____ PRECONSTRUCTION ENGINEER | DRAWN JAH 02-05 | CHECK SMM 02-05 | DATE ____ | | |
| | | QUANT. JAH 02-05 | CHECK SMM 02-05 | BY ____ | | |

| NO. | DATE | DESIGN REV. BY | MAPS CORR. BY | PARCELS AFFECTED | REQUEST BY | REMARKS |
|---|---|---|---|---|---|---|
| | | ORIGINAL SUBMISSION FOR AUTHORIZATION | | | | |
| DATE | | REVISIONS | | | | |

UTAH COUNTY

SHEET NO. RD-69

SEE SHEET RD69
MATCH LINE STATION 560+00.000

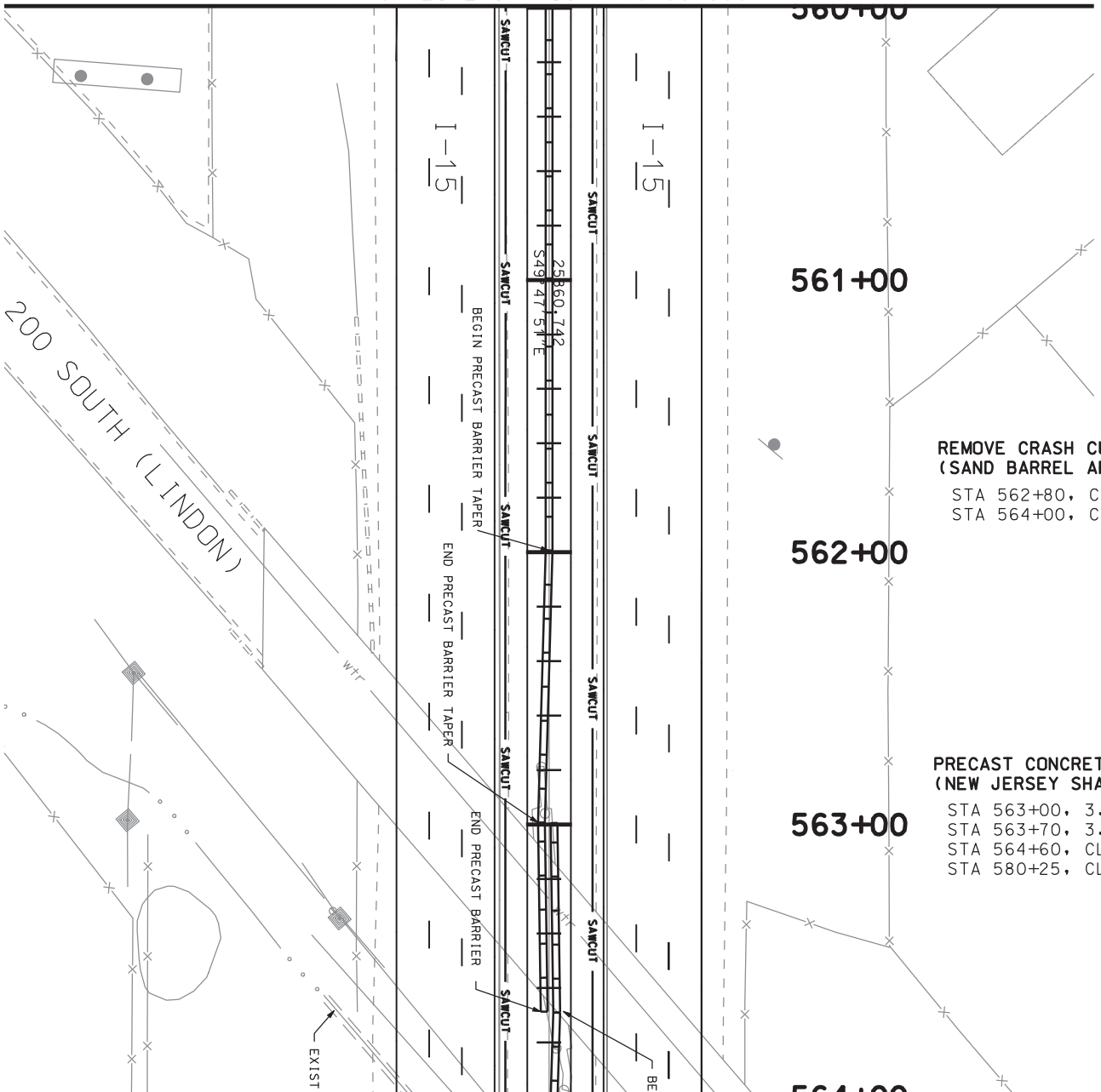

CATCH BASIN NO. 70A
CATCH BASIN, DETAIL DWG DT-7 REQ'D
(SEE SHEET DT-7)
RECTANGULAR GRATE AND FRAME
(STANDARD GRATING)
STD DWG GF3 REQ'D (2).

STA 564+63, CL
TOB EL=4483.10
EXIST EL=4480.60

REMOVE PRECAST CONCRETE
BARRIER REQ'D
STA 563+00, RT TO
STA 563+80, RT

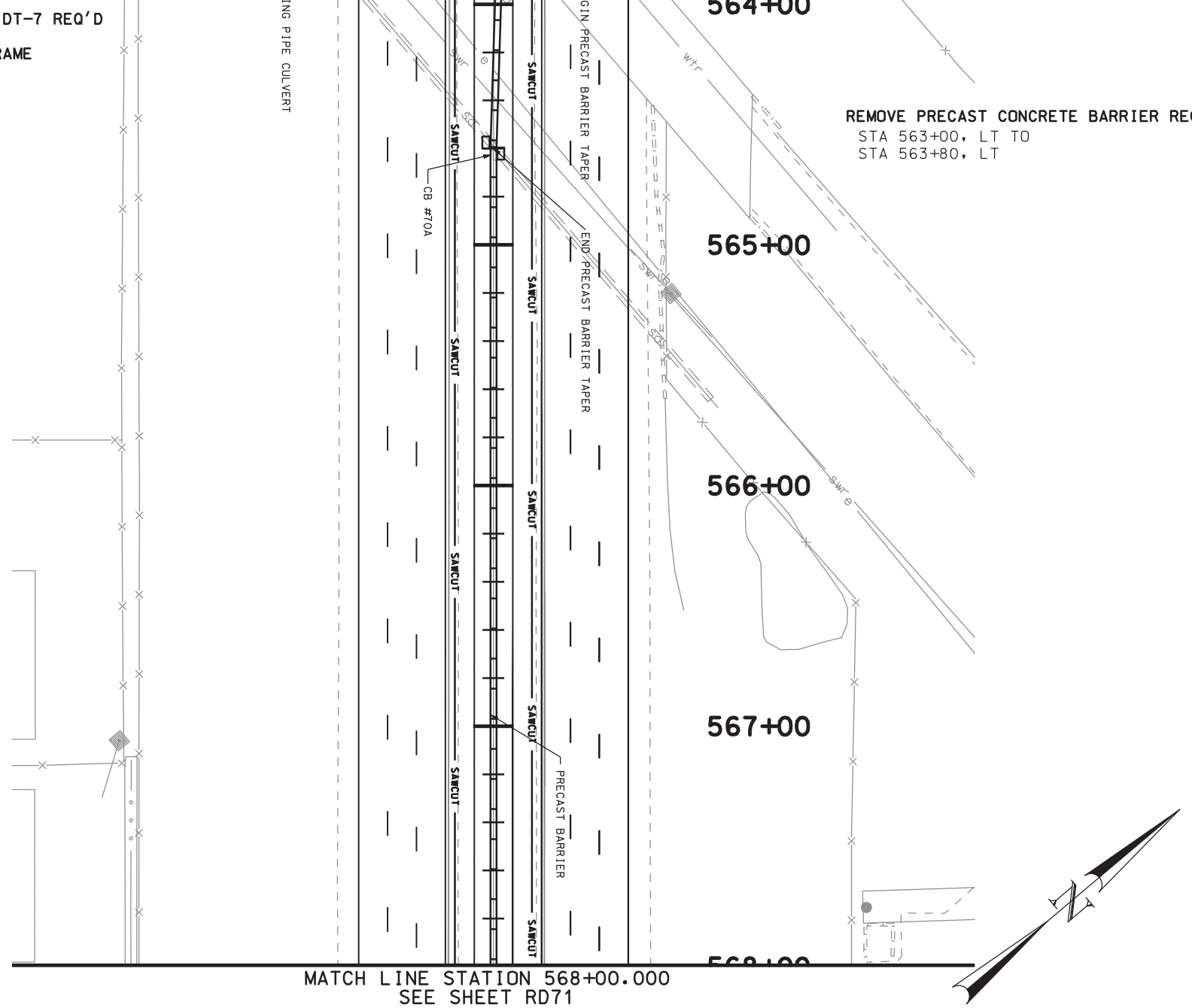


MATCH LINE STATION 568+00.000
SEE SHEET RD71

| | | | | | | |
|---|---|---|---|---|---|---|
| I-15; CORRIDOR | UTAH DEPARTMENT OF TRANSPORTATION | | | | | |
| IN UTAH COUNTY | REGION THREE -- OREM CITY, UTAH | | | | | |
| PLAN SHEET | ROADWAY DESIGN | | | | | |
| | APPROVAL RECOMM. ____ DATE ____ PROJECT DESIGN ENGINEER | DESIGN JAH 02-05 | CHECK SMM 02-05 | REVIEW | | |
| PROJECT NUMBER SP-15-6(52)241 | APPROVED FOR USE BY UDOT ____ DATE ____ PRECONSTRUCTION ENGINEER | DRAWN JAH 02-05 | CHECK SMM 02-05 | DATE ____ | | |
| | | QUANT. JAH 02-05 | CHECK SMM 02-05 | BY ____ | | |

| NO. | DATE | DESIGN REV. BY | MAPS CORR. BY | PARCELS AFFECTED | REQUEST BY | REMARKS |
|---|---|---|---|---|---|---|
| | | ORIGINAL SUBMISSION FOR AUTHORIZATION | | | | |
| | DATE | REVISIONS | | | | |

UTAH COUNTY

SHEET NO. RD-70

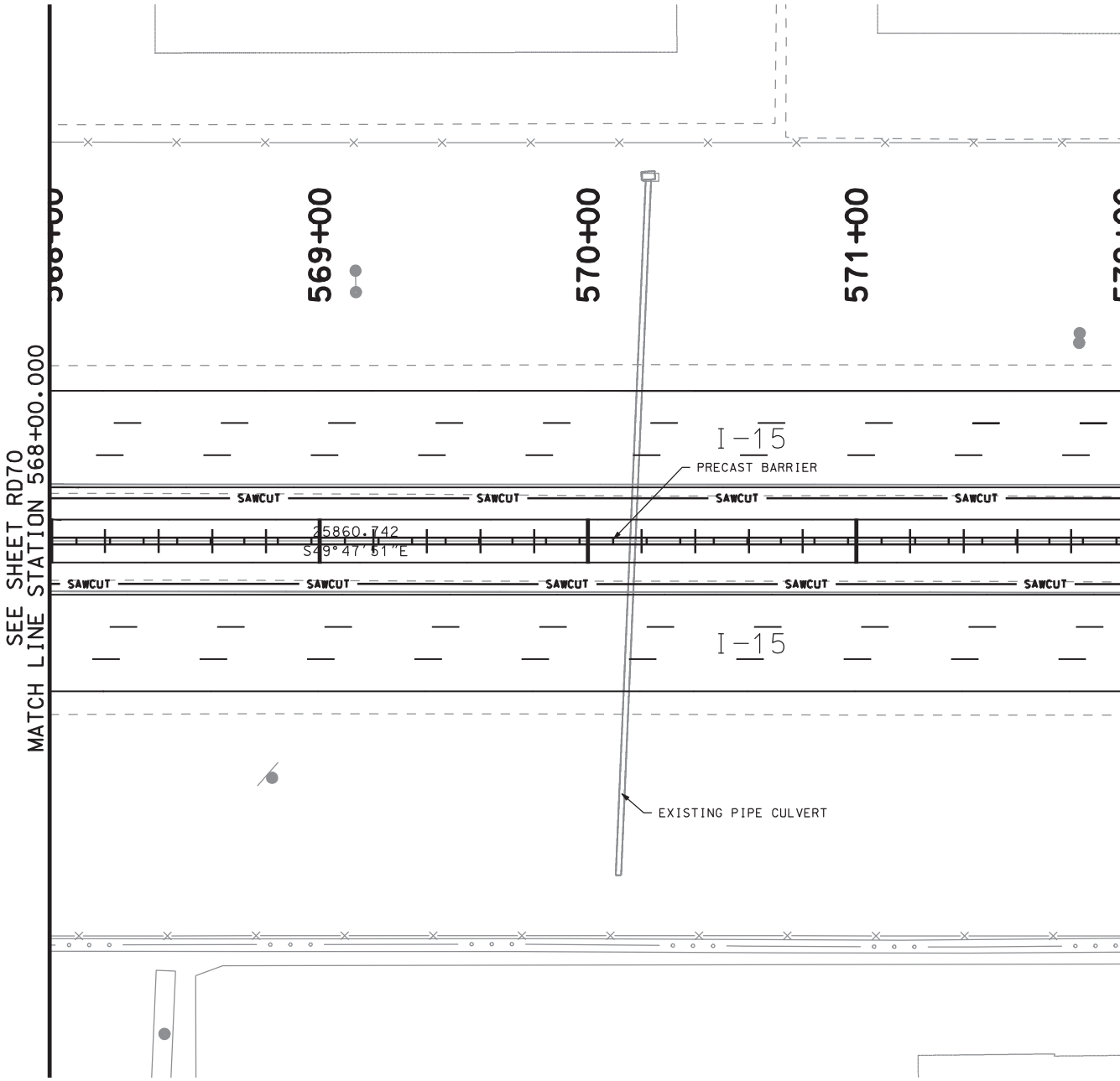


DGN File:IP_PWPsdms1715\RD-071.dgn

02-MAY-2005

REMOVE CATCH BASIN REQ'D
STA 574+76, CL

CATCH BASIN NO. 71A
CATCH BASIN, DETAIL DWG DT-7 REQ'D
(SEE SHEET DT-7)
RECTANGULAR GRATE AND FRAME
(STANDARD GRATING)
STD DWG GF3 REQ'D (2).
STA 574+76, CL
TOB EL=4510.70
EXIST EL=4508.30

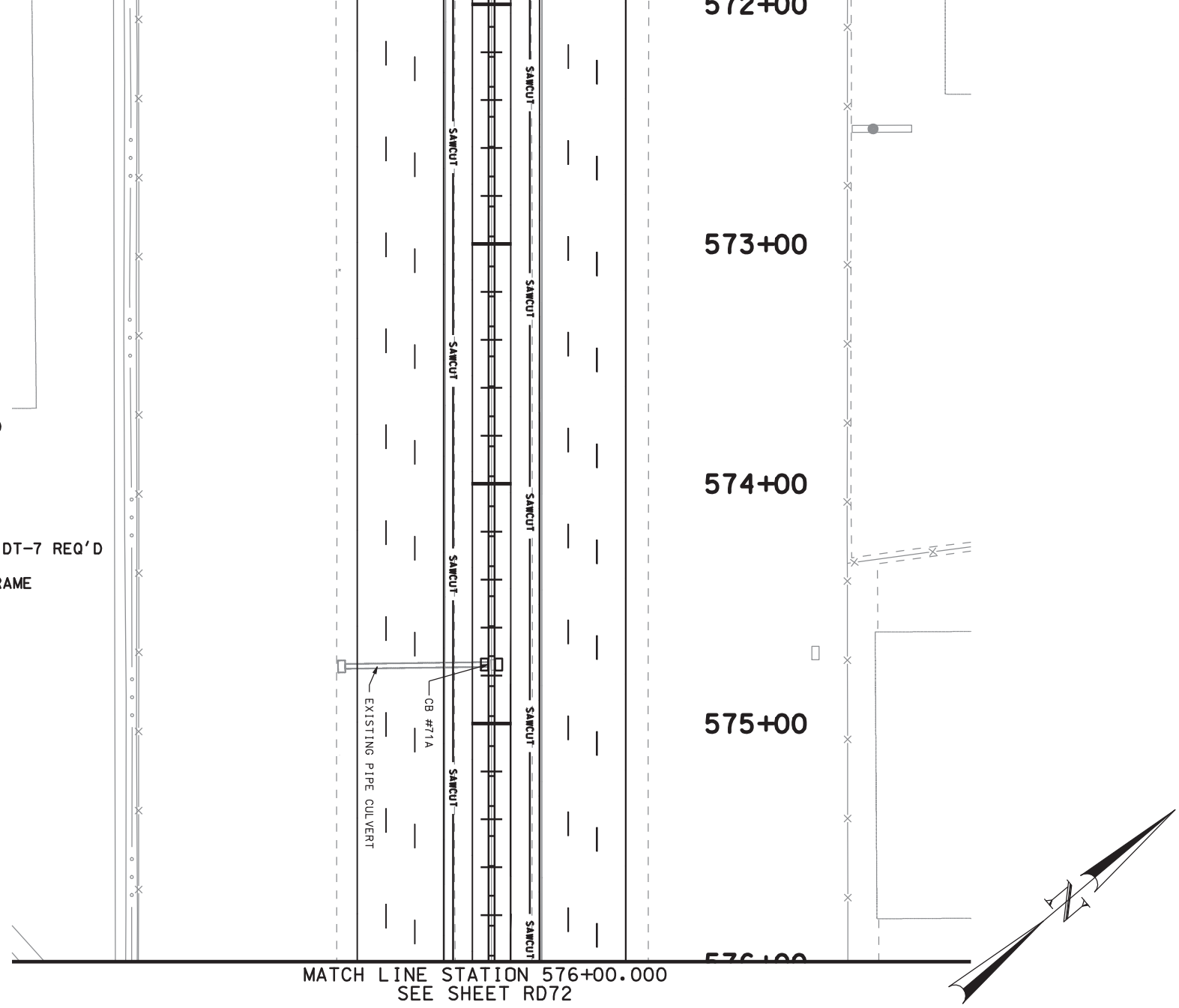


MATCH LINE STATION 576+00.000
SEE SHEET RD72

| | | | | | | |
|---|---|---|---|---|---|---|
| SHEET NO. RD-71 | UTAH COUNTY | I-15; CORRIDOR IN UTAH COUNTY PLAN SHEET | UTAH DEPARTMENT OF TRANSPORTATION<br>REGION THREE -- OREM CITY, UTAH<br>ROADWAY DESIGN | | | |
| | | PROJECT NUMBER SP-15-6(52)241 | APPROVAL RECOMM. DATE / PROJECT DESIGN ENGINEER | DESIGN JAH 02-05 | CHECK SMM 02-05 | REVIEW |
| | | | APPROVED FOR USE BY UDOT DATE / PRECONSTRUCTION ENGINEER | DRAWN JAH 02-05 | CHECK SMM 02-05 | DATE |
| | | | | QUANT. JAH 02-05 | CHECK SMM 02-05 | BY |

| NO. | DATE | DESIGN REV. BY | MAPS CORR. BY | PARCELS AFFECTED | REQUEST BY | REMARKS |
|---|---|---|---|---|---|---|
| | | ORIGINAL SUBMISSION FOR AUTHORIZATION | | | | |
| | DATE | REVISIONS | | | | |

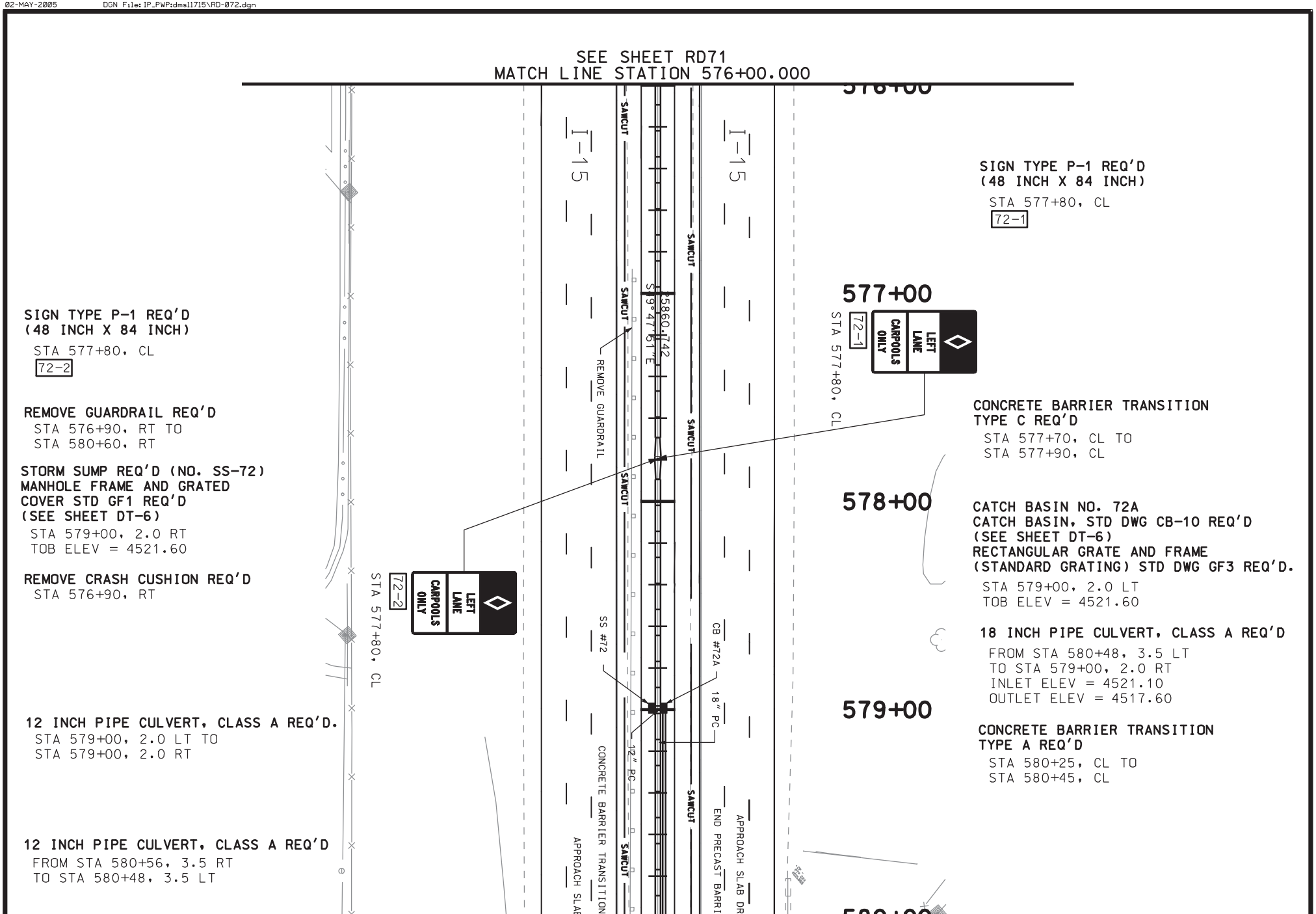
SEE SHEET RD71
MATCH LINE STATION 576+00.000
576+00
577+00
578+00
579+00
580+00
I-15
I-15
SAWCUT
SAWCUT
SAWCUT
SAWCUT
SAWCUT
SAWCUT
S19°47'51"E
5860.742
REMOVE GUARDRAIL
SS #72
CB #72A
18" PC
12" PC
CONCRETE BARRIER TRANSITION
APPROACH SLAB DR
END PRECAST BARRI
LEFT LANE CARPOOLS ONLY
72-1
STA 577+80, CL
LEFT LANE CARPOOLS ONLY
72-2
STA 577+80, CL
SIGN TYPE P-1 REQ'D
(48 INCH X 84 INCH)
STA 577+80, CL
72-1
CONCRETE BARRIER TRANSITION
TYPE C REQ'D
STA 577+70, CL TO
STA 577+90, CL
CATCH BASIN NO. 72A
CATCH BASIN, STD DWG CB-10 REQ'D
(SEE SHEET DT-6)
RECTANGULAR GRATE AND FRAME
(STANDARD GRATING) STD DWG GF3 REQ'D.
STA 579+00, 2.0 LT
TOB ELEV = 4521.60
18 INCH PIPE CULVERT, CLASS A REQ'D
FROM STA 580+48, 3.5 LT
TO STA 579+00, 2.0 RT
INLET ELEV = 4521.10
OUTLET ELEV = 4517.60
CONCRETE BARRIER TRANSITION
TYPE A REQ'D
STA 580+25, CL TO
STA 580+45, CL
SIGN TYPE P-1 REQ'D
(48 INCH X 84 INCH)
STA 577+80, CL
72-2
REMOVE GUARDRAIL REQ'D
STA 576+90, RT TO
STA 580+60, RT
STORM SUMP REQ'D (NO. SS-72)
MANHOLE FRAME AND GRATED
COVER STD GF1 REQ'D
(SEE SHEET DT-6)
STA 579+00, 2.0 RT
TOB ELEV = 4521.60
REMOVE CRASH CUSHION REQ'D
STA 576+90, RT
12 INCH PIPE CULVERT, CLASS A REQ'D.
STA 579+00, 2.0 LT TO
STA 579+00, 2.0 RT
12 INCH PIPE CULVERT, CLASS A REQ'D
FROM STA 580+56, 3.5 RT
TO STA 580+48, 3.5 LT

**REMOVE CABLE END SECTION REQ'D**
STA 580+62 CL
STA 583+97 CL

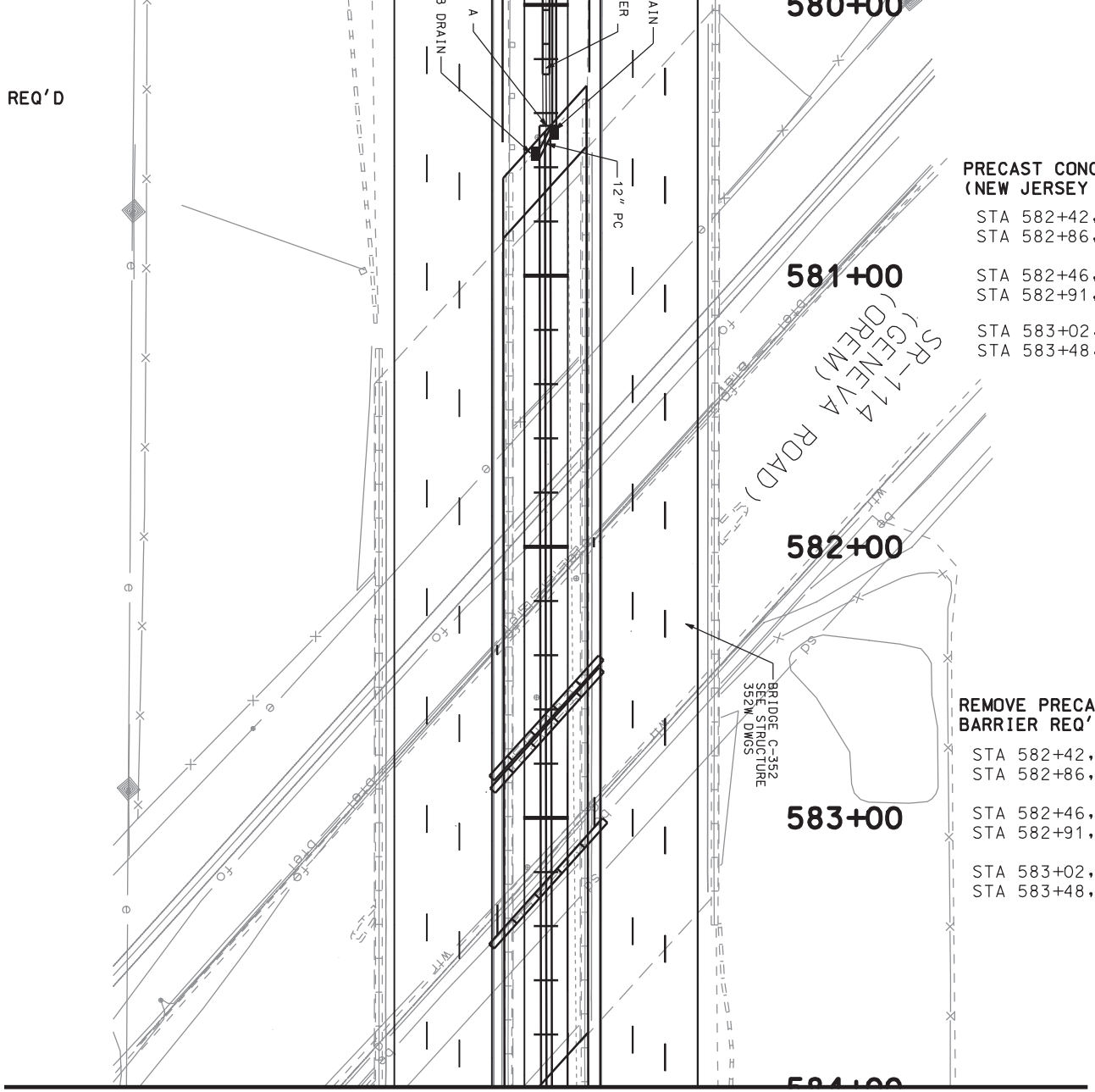


**PRECAST CONCRETE FULL BARRIER (NEW JERSEY SHAPE) REQ'D**

STA 582+42, 20.3 LT TO
STA 582+86, 20.0 RT

STA 582+46, 20.5 LT TO
STA 582+91, 19.7 RT

STA 583+02, 21.8 LT TO
STA 583+48, 20.1 RT

**REMOVE PRECAST CONCRETE BARRIER REQ'D**

STA 582+42, 20.3 LT TO
STA 582+86, 20.0 RT

STA 582+46, 20.5 LT TO
STA 582+91, 19.7 RT

STA 583+02, 21.8 LT TO
STA 583+48, 20.1 RT

MATCH LINE STATION 584+00.000
SEE SHEET RD73

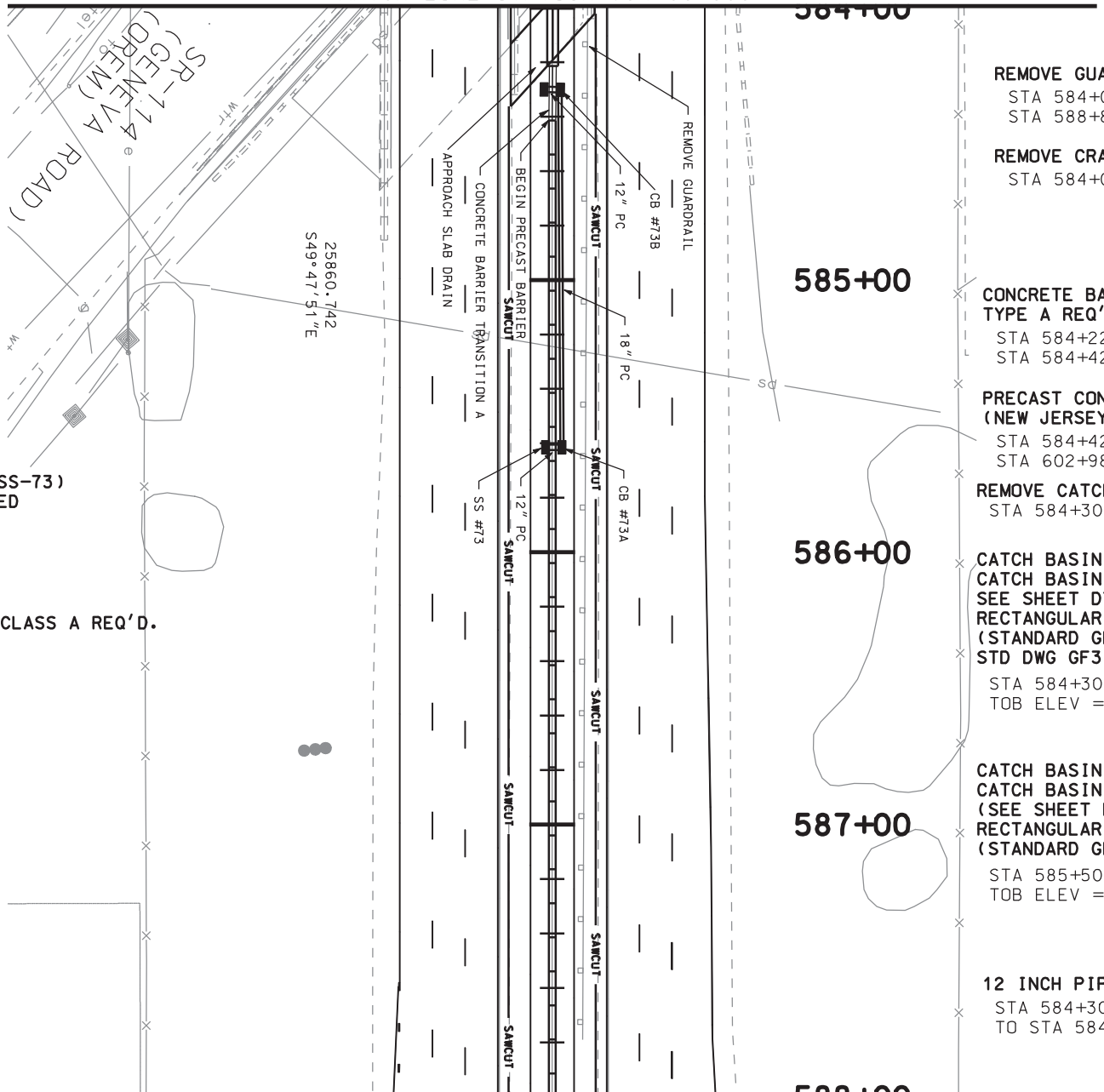
SEE SHEET RD72
MATCH LINE STATION 584+00.000
584+00
585+00
586+00
587+00
588+00
SR-114
(GENEVA ROAD)
(OREM)
25860.742
S49°47'51"E
REMOVE GUARDRAIL
CB #73B
12" PC
18" PC
CB #73A
12" PC
SS #73
CONCRETE BARRIER TRANSITION A
APPROACH SLAB DRAIN
BEGIN PRECAST BARRIER
SAWCUT
REMOVE GUARDRAIL REQ'D
STA 584+03, LT TO
STA 588+80, LT
REMOVE CRASH CUSHION REQ'D
STA 584+03, LT
CONCRETE BARRIER TRANSITION
TYPE A REQ'D
STA 584+22, CL TO
STA 584+42, CL
PRECAST CONCRETE FULL BARRIER
(NEW JERSEY SHAPE) REQ'D
STA 584+42, CL TO
STA 602+98, CL
REMOVE CATCH BASIN REQ'D
STA 584+30, CL
CATCH BASIN NO. 73B
CATCH BASIN, DETAIL DWG DT-7 REQ'D
SEE SHEET DT-7
RECTANGULAR GRATE AND FRAME
(STANDARD GRATING)
STD DWG GF3 REQ'D (2).
STA 584+30, CL
TOB ELEV = 4527.38
CATCH BASIN NO. 73A
CATCH BASIN, STD DWG CB-10 REQ'D
(SEE SHEET DT-6)
RECTANGULAR GRATE AND FRAME
(STANDARD GRATING) STD DWG GF3 REQ'D.
STA 585+50, 2.0 LT
TOB ELEV = 4527.19
12 INCH PIPE CULVERT, CLASS A REQ'D
STA 584+30, 3.5 RT
TO STA 584+30, 3.5 LT
STORM SUMP REQ'D (NO. SS-73)
MANHOLE FRAME AND GRATED
COVER STD GF1 REQ'D
(SEE SHEET DT-6)
STA 585+50, 2.0 RT
TOB ELEV = 4527.19
12 INCH PIPE CULVERT, CLASS A REQ'D.
STA 585+50, 2.0 LT TO
STA 585+50, 2.0 RT

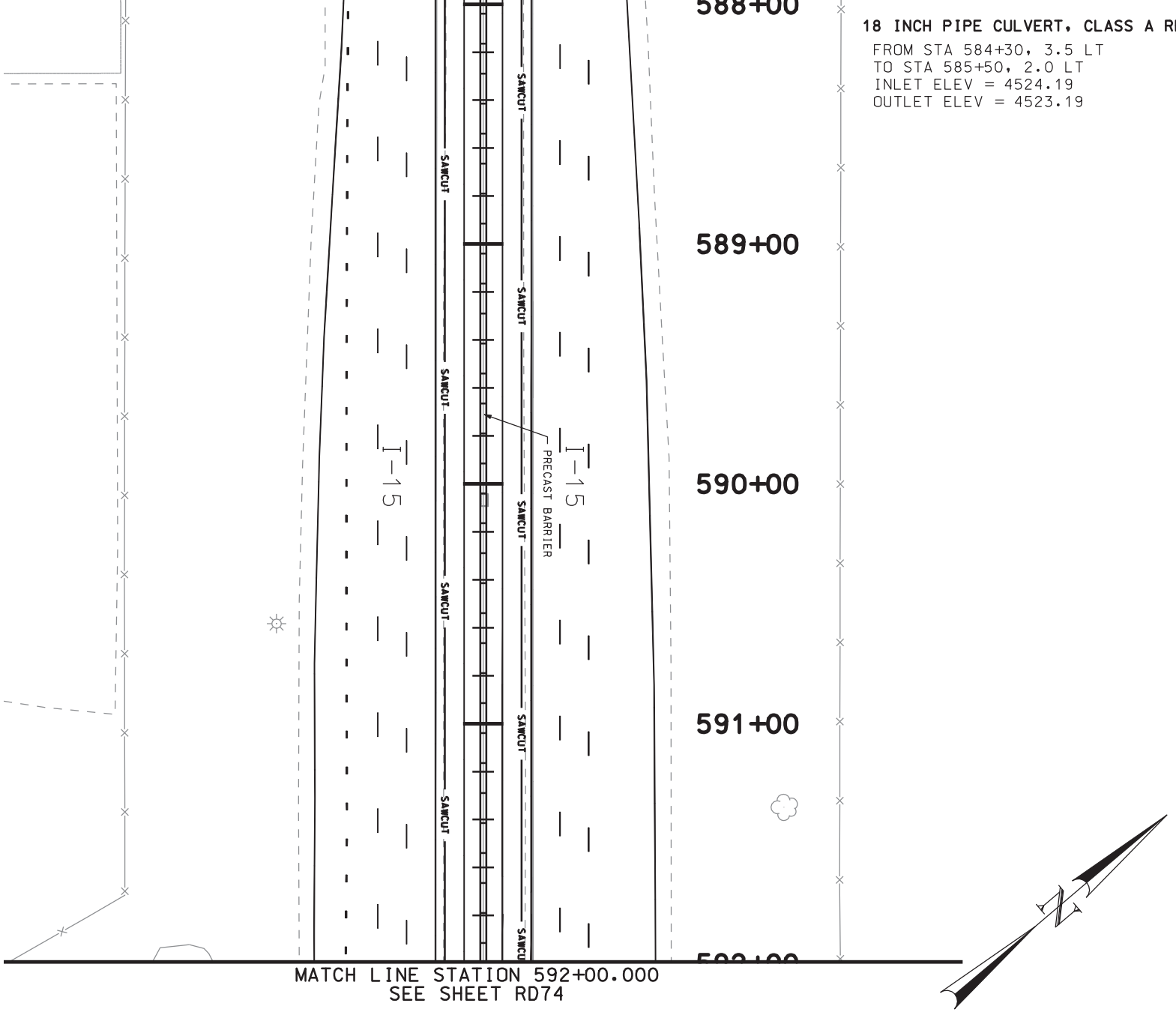


**18 INCH PIPE CULVERT, CLASS A REQ'D**

FROM STA 584+30, 3.5 LT
TO STA 585+50, 2.0 LT
INLET ELEV = 4524.19
OUTLET ELEV = 4523.19

MATCH LINE STATION 592+00.000
SEE SHEET RD74

| | | | | | |
|---|---|---|---|---|---|
| SHEET NO. RD-73 | UTAH COUNTY | I-15; CORRIDOR IN UTAH COUNTY | UTAH DEPARTMENT OF TRANSPORTATION<br>REGION THREE -- OREM CITY, UTAH<br>ROADWAY DESIGN | | |
| | | PLAN SHEET | APPROVAL RECOMM. ____ DATE ____ PROJECT DESIGN ENGINEER | DESIGN JAH 02-05 | CHECK SMM 02-05 | REVIEW |
| | | PROJECT NUMBER SP-15-6(52)241 | APPROVED FOR USE BY UDOT ____ DATE ____ PRECONSTRUCTION ENGINEER | DRAWN JAH 02-05 | CHECK SMM 02-05 | DATE ____ |
| | | | | QUANT. JAH 02-05 | CHECK SMM 02-05 | BY ____ |

| NO. | DATE | DESIGN REV. BY | MAPS CORR. BY | PARCELS AFFECTED | REQUEST BY | REMARKS |
|---|---|---|---|---|---|---|
| | | ORIGINAL SUBMISSION FOR AUTHORIZATION | | | | |
| | DATE | REVISIONS | | | | |

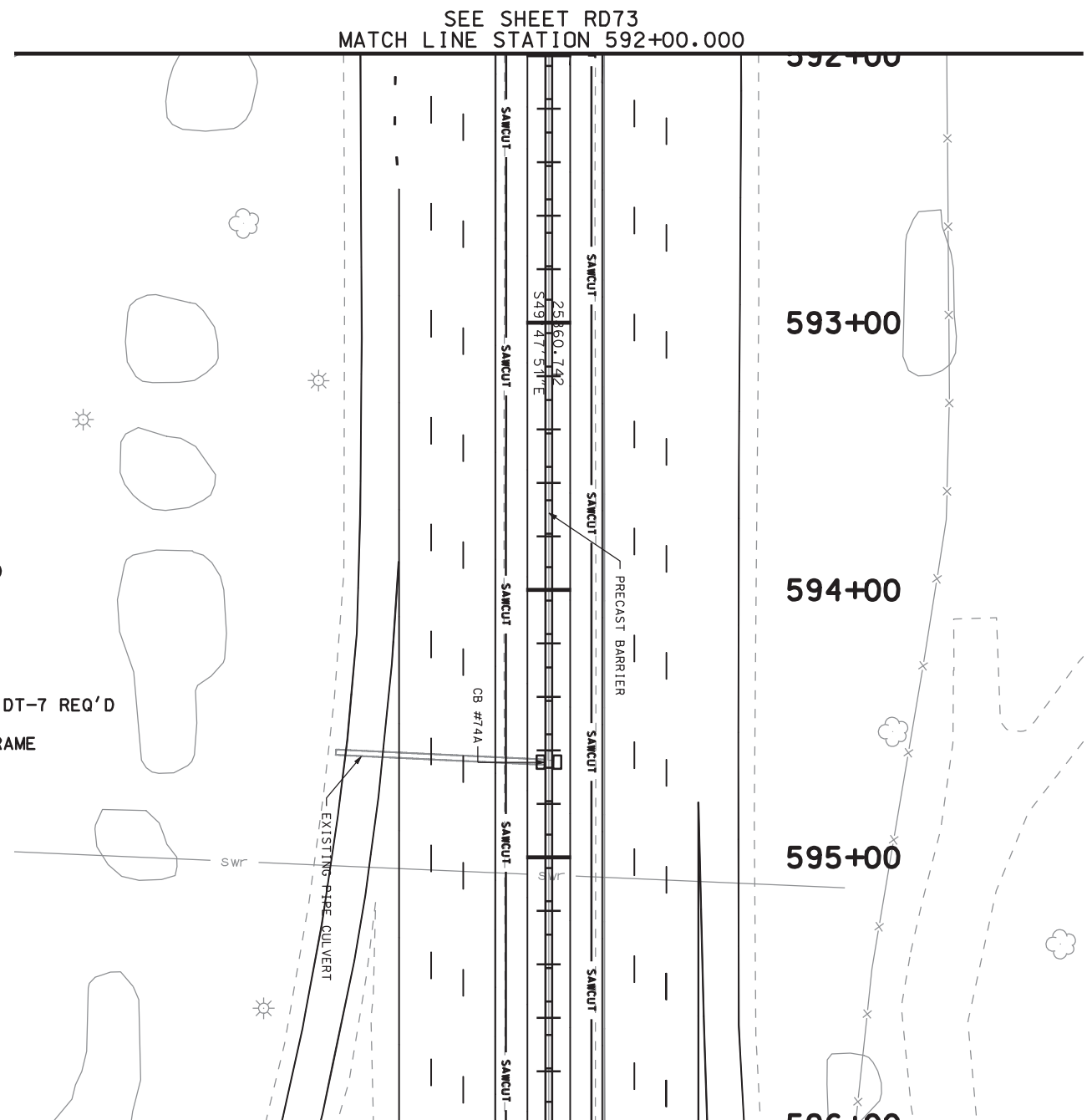


REMOVE CATCH BASIN REQ'D
STA 594+65, CL

CATCH BASIN NO. 74A
CATCH BASIN, DETAIL DWG DT-7 REQ'D
(SEE SHEET DT-7)
RECTANGULAR GRATE AND FRAME
(STANDARD GRATING)
STD DWG GF3 REQ'D (2).
STA 594+65, CL
TOB EL=4522.10
EXIST EL=4519.60

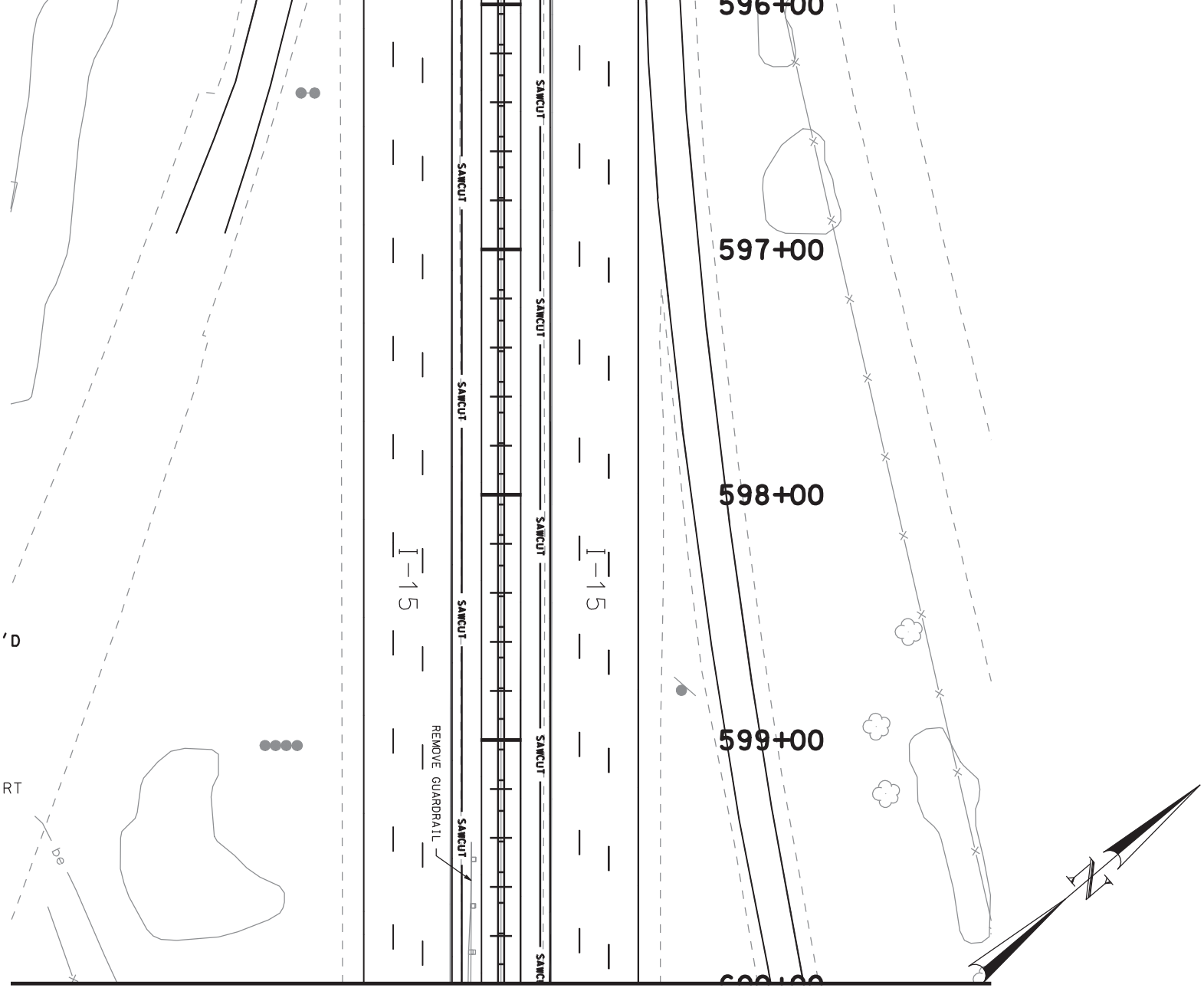


**REMOVE CRASH CUSHION REQ'D**
STA 599+60, RT

**REMOVE GUARDRAIL REQ'D**
STA 599+60, RT TO
MATCH LINE STA 600+00, RT

MATCH LINE STATION 600+00.000
SEE SHEET RD75

| | | | | | | |
|---|---|---|---|---|---|---|
| SHEET NO. RD-74 | UTAH COUNTY | I-15; CORRIDOR IN UTAH COUNTY PLAN SHEET | UTAH DEPARTMENT OF TRANSPORTATION<br>REGION THREE -- OREM CITY, UTAH<br>ROADWAY DESIGN | | | |
| | | PROJECT NUMBER SP-15-6(52)241 | APPROVAL RECOMM. DATE PROJECT DESIGN ENGINEER | DESIGN JAH 02-05 | CHECK SMM 02-05 | REVIEW |
| | | | APPROVED FOR USE BY UDOT DATE PRECONSTRUCTION ENGINEER | DRAWN JAH 02-05 | CHECK SMM 02-05 | DATE |
| | | | | QUANT. JAH 02-05 | CHECK SMM 02-05 | BY |

| NO. | DATE | DESIGN REV. BY | MAPS CORR. BY | PARCELS AFFECTED | REQUEST BY | REMARKS |
|---|---|---|---|---|---|---|
| | | ORIGINAL SUBMISSION FOR AUTHORIZATION | | | | |

DATE REVISIONS

SEE SHEET RD74
MATCH LINE STATION 600+00.000

**REMOVE GUARDRAIL REQ'D**
MATCH LINE STA 600+00, RT TO
STA 603+05, RT

**SIGN TYPE P-1 REQ'D**
**(48 INCH X 96 INCH)**
STA 601+00, CL
75-2

**STORM SUMP REQ'D (SS-75)**
**MANHOLE FRAME AND GRATED**
**COVER STD GF1 REQ'D**
**(SEE SHEET DT-6)**

STA 601+70, 2.0 RT
TOB ELEV = 4532.40

**12 INCH PIPE CULVERT, CLASS A REQ'D.**
STA 601+70, 2.0 LT TO
STA 601+70, 2.0 RT

STA 603+10, 3.5 RT TO
STA 603+13, 3.5 LT

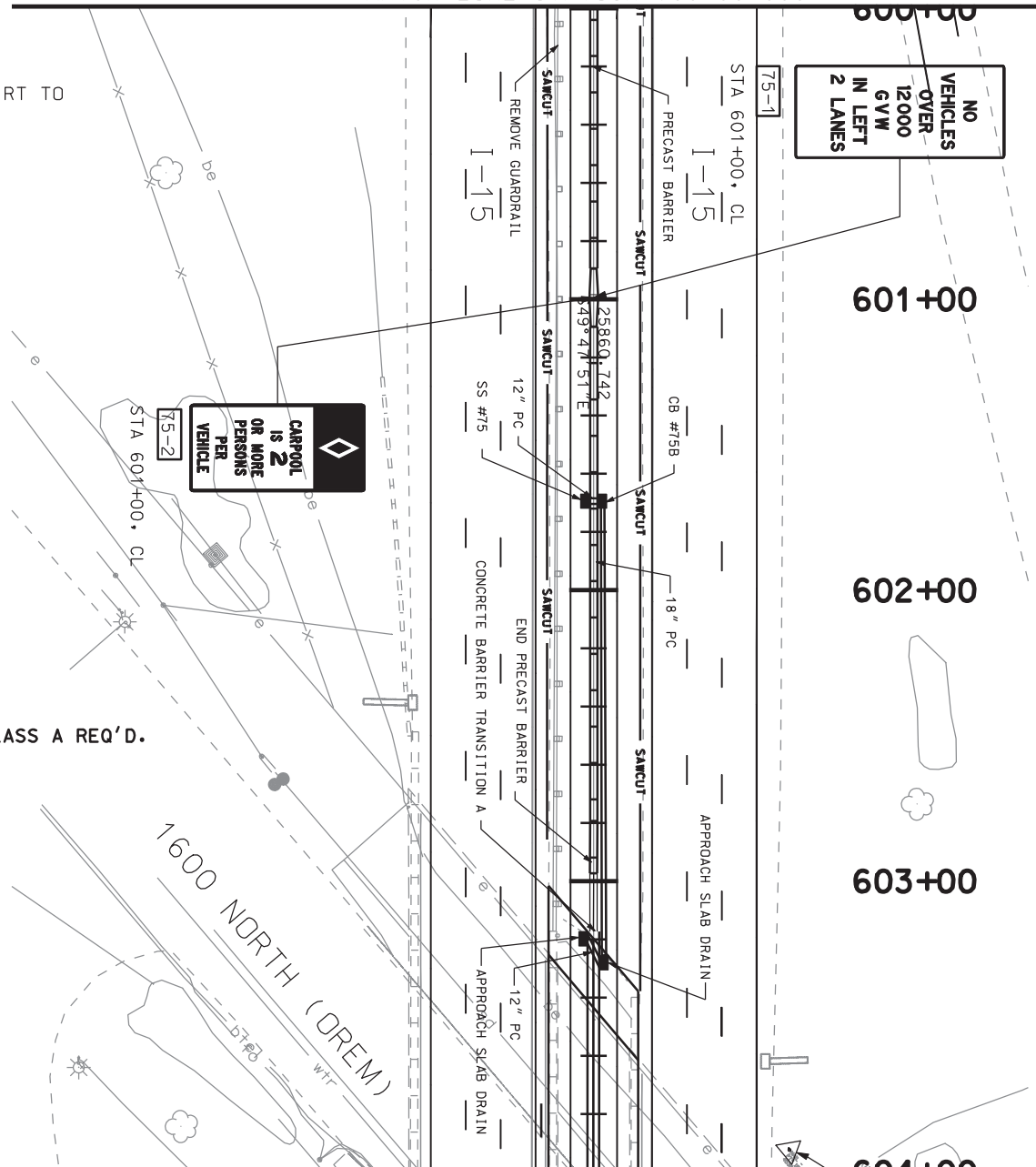


**SIGN TYPE P-1 REQ'D**
**(48 INCH X 84 INCH)**
STA 601+00, CL
75-1

**CONCRETE BARRIER TRANSITION**
**TYPE C REQ'D**
STA 600+90, CL TO
STA 601+10, CL

**CATCH BASIN NO. 75B**
**CATCH BASIN, STD DWG CB-10 REQ'D**
**SEE SHEET DT-6**
**RECTANGULAR GRATE AND FRAME**
**(STANDARD GRATING) STD DWG GF3 REQ'D.**
STA 601+70, 2.0 LT
TOB ELEV = 4532.40

**18 INCH PIPE CULVERT, CLASS A REQ'D**
STA 603+30, 3.5 LT
TO STA 601+70, 2.0 LT
INLET ELEV = 4531.50
OUTLET ELEV = 4528.40

**CONCRETE BARRIER TRANSITION**
**TYPE A REQ'D**
STA 602+98, CL TO
STA 603+18, CL

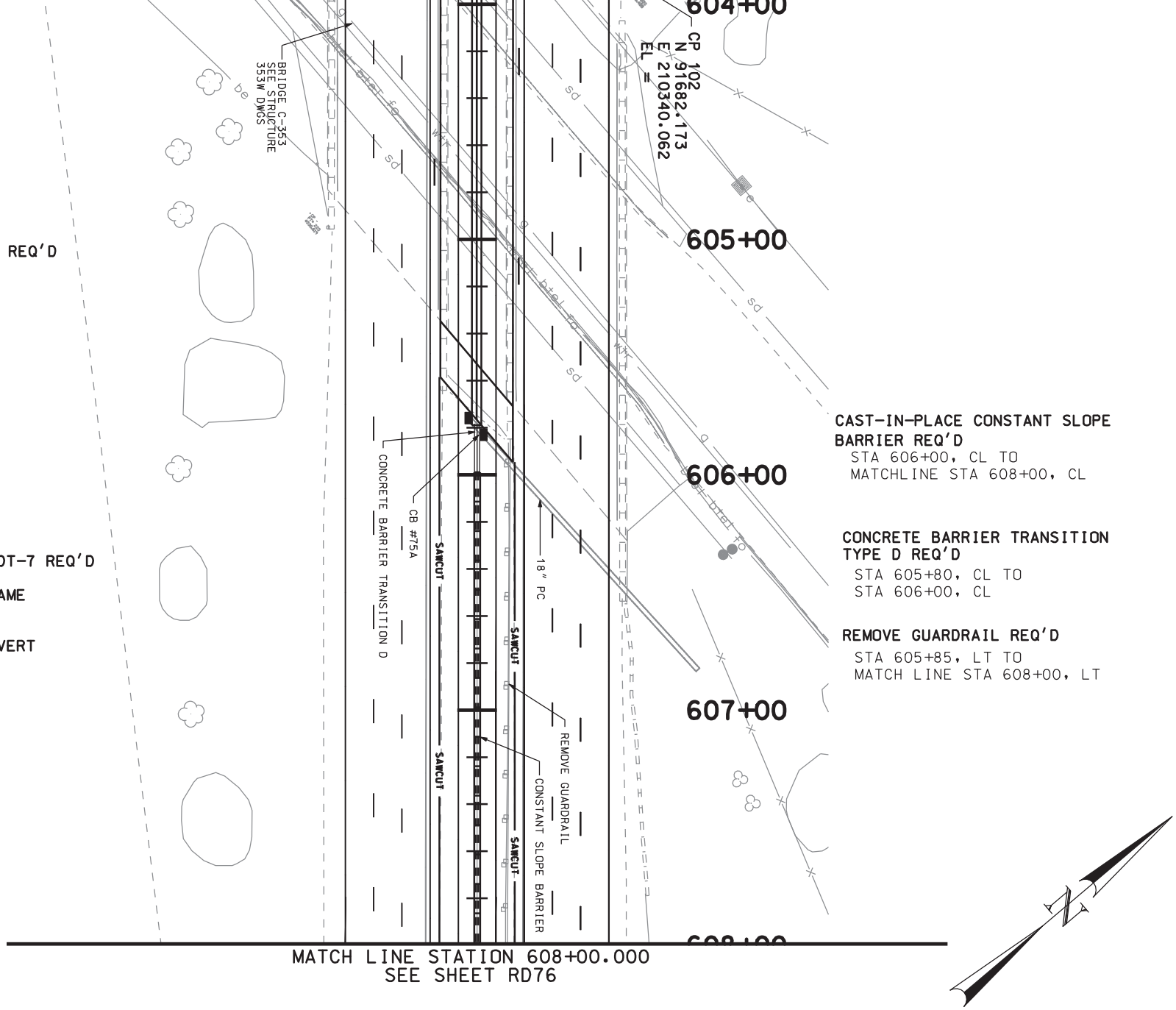


**REMOVE CABLE END SECTION REQ'D**
STA 603+22
STA 605+82

**CATCH BASIN NO. 75A**
**CATCH BASIN, DETAIL DWG DT-7 REQ'D**
**(SEE SHEET DT-7)**
**RECTANGULAR GRATE AND FRAME**
**(STANDARD GRATING)**
**STD DWG GF3 REQ'D (2).**
**TIE TO EXISTING PIPE CULVERT**
STA 605+77, 3.5 RT
COL A, LINE 1
TOB ELEV = 4540.30

**CAST-IN-PLACE CONSTANT SLOPE BARRIER REQ'D**
STA 606+00, CL TO
MATCHLINE STA 608+00, CL

**CONCRETE BARRIER TRANSITION TYPE D REQ'D**
STA 605+80, CL TO
STA 606+00, CL

**REMOVE GUARDRAIL REQ'D**
STA 605+85, LT TO
MATCH LINE STA 608+00, LT

| | | | | | | |
|---|---|---|---|---|---|---|
| SHEET NO. RD-75 | UTAH COUNTY | I-15; CORRIDOR IN UTAH COUNTY | UTAH DEPARTMENT OF TRANSPORTATION<br>REGION THREE -- OREM CITY, UTAH<br>ROADWAY DESIGN | | | |
| | | PLAN SHEET | APPROVAL RECOMM. ____ DATE ____ PROJECT DESIGN ENGINEER | DESIGN JAH 02-05 | CHECK SMM 02-05 | REVIEW |
| | | PROJECT NUMBER SP-15-6(52)241 | APPROVED FOR USE BY UDOT ____ DATE ____ PRECONSTRUCTION ENGINEER | DRAWN JAH 02-05 | CHECK SMM 02-05 | DATE ____ |
| | | | | QUANT. JAH 02-05 | CHECK SMM 02-05 | BY ____ |

| NO. | DATE | DESIGN REV. BY | MAPS CORR. BY | PARCELS AFFECTED | REQUEST BY | REMARKS |
|---|---|---|---|---|---|---|
| | | ORIGINAL SUBMISSION FOR AUTHORIZATION | | | | |
| | DATE | REVISIONS | | | | |

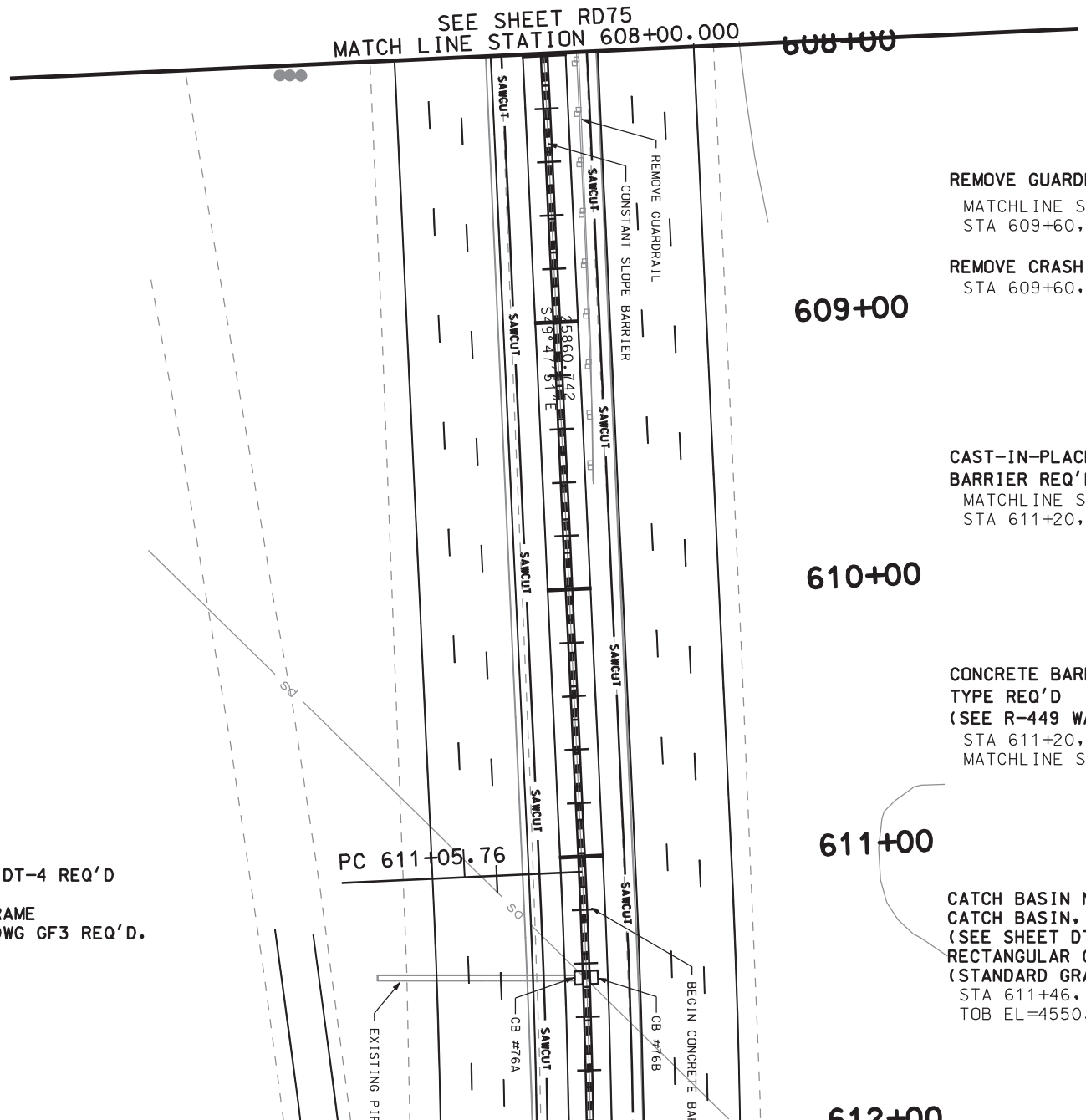


**REMOVE GUARDRAIL REQ'D**
MATCHLINE STA 608+00, LT TO
STA 609+60, LT

**REMOVE CRASH CUSHION REQ'D**
STA 609+60, LT

**CAST-IN-PLACE CONSTANT SLOPE BARRIER REQ'D**
MATCHLINE STA 608+00, CL TO
STA 611+20, CL

**CONCRETE BARRIER - STEPPED PAVEMENT TYPE REQ'D**
**(SEE R-449 WALL G)**
STA 611+20, CL TO
MATCHLINE STA 616+00, CL

**CATCH BASIN NO. 76B**
**CATCH BASIN, DETAIL DWG DT-4 REQ'D**
**(SEE SHEET DT-4)**
**RECTANGULAR GRATE AND FRAME**
**(STANDARD GRATING) STD DWG GF3 REQ'D.**
STA 611+46, 3.5 LT
TOB EL=4550.20

**CATCH BASIN NO. 76A**
**CATCH BASIN, DETAIL DWG DT-4 REQ'D**
**(SEE SHEET DT-4)**
**RECTANGULAR GRATE AND FRAME**
**(STANDARD GRATING) STD DWG GF3 REQ'D.**
STA 611+46, 3.5 RT
TOB EL=4551.40

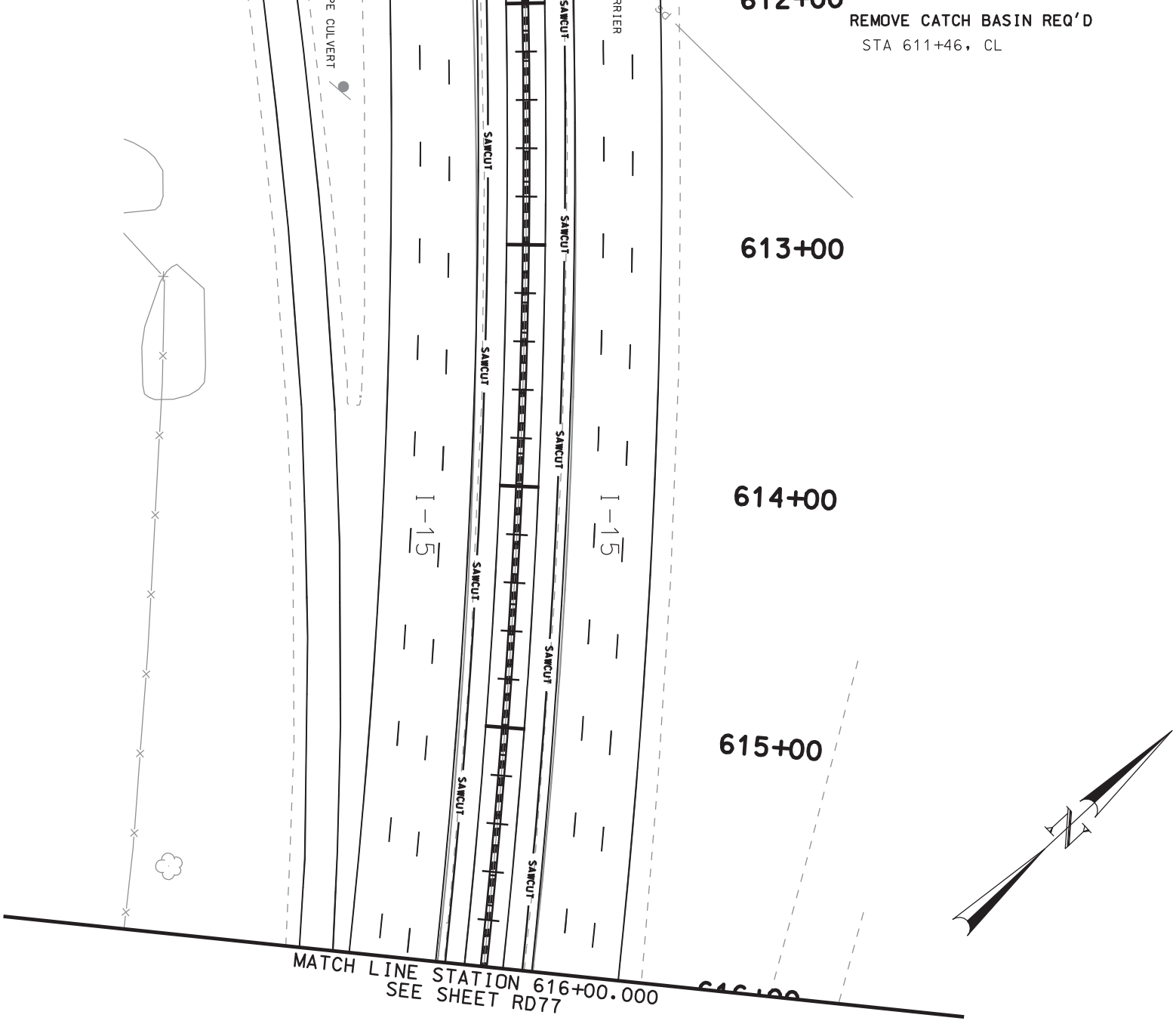


| | | | | | | |
|---|---|---|---|---|---|---|
| I-15; CORRIDOR | UTAH DEPARTMENT OF TRANSPORTATION | | | | | |
| IN UTAH COUNTY | REGION THREE -- OREM CITY, UTAH | | | | | |
| PLAN SHEET | ROADWAY DESIGN | | | | | |
| | APPROVAL RECOMM. DATE / PROJECT DESIGN ENGINEER | DESIGN JAH 02-05 | CHECK SMM 02-05 | REVIEW | | |
| PROJECT NUMBER SP-15-6(52)241 | APPROVED FOR USE BY UDOT DATE / PRECONSTRUCTION ENGINEER | DRAWN JAH 02-05 | CHECK SMM 02-05 | DATE | | |
| | | QUANT. JAH 02-05 | CHECK SMM 02-05 | BY | | |

| NO. | DATE | DESIGN REV. BY | MAPS CORR. BY | PARCELS AFFECTED | REQUEST BY | REMARKS |
|---|---|---|---|---|---|---|
| | | ORIGINAL SUBMISSION FOR AUTHORIZATION | | | | |
| | DATE | REVISIONS | | | | |

UTAH COUNTY

SHEET NO. RD-76

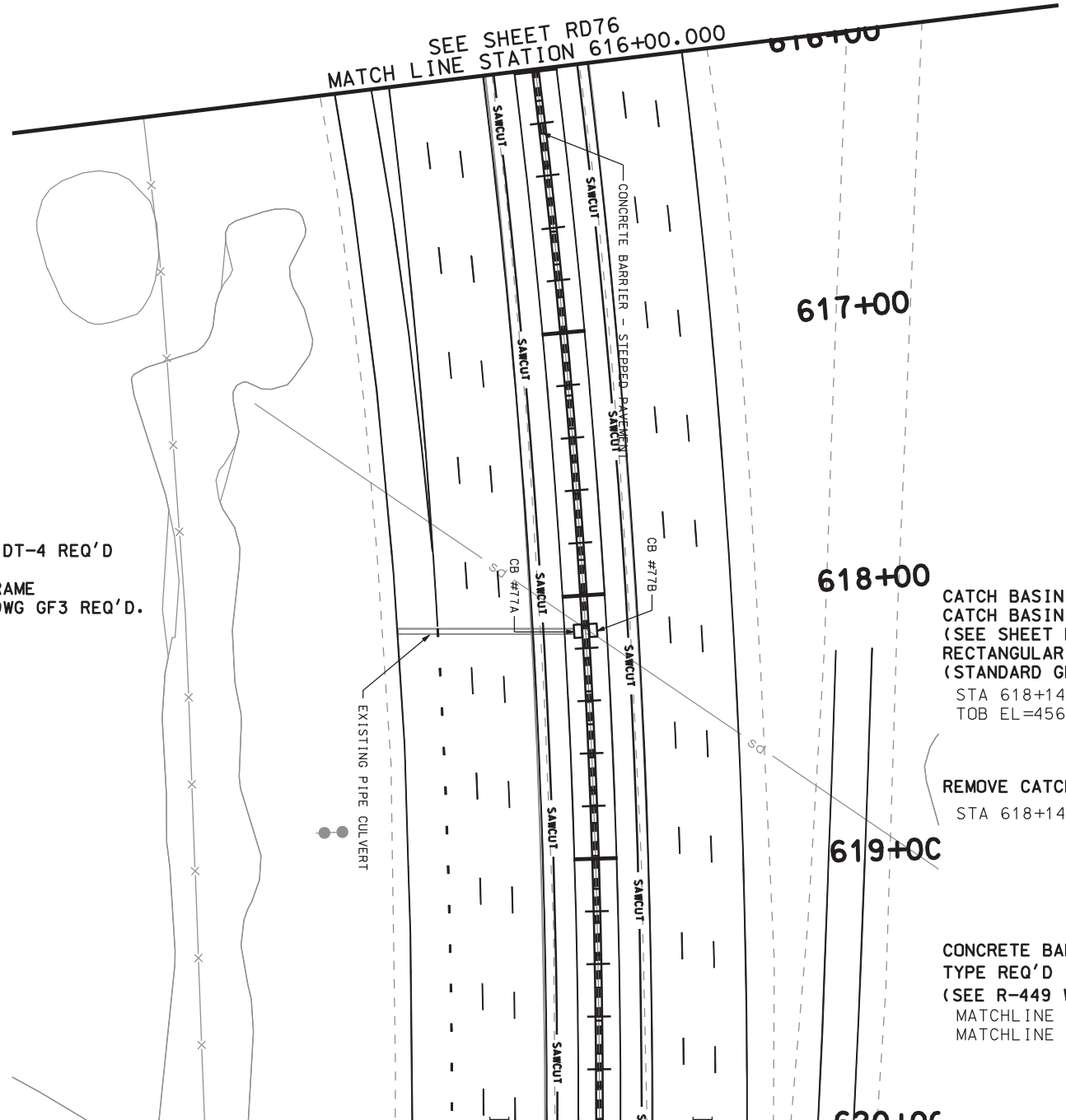


CATCH BASIN NO. 77A
CATCH BASIN, DETAIL DWG DT-4 REQ'D
(SEE SHEET DT-4)
RECTANGULAR GRATE AND FRAME
(STANDARD GRATING) STD DWG GF3 REQ'D.
STA 618+14, 3.5 RT
TOB EL=4564.10

CATCH BASIN NO. 77B
CATCH BASIN, DETAIL DWG DT-4 REQ'D
(SEE SHEET DT-4)
RECTANGULAR GRATE AND FRAME
(STANDARD GRATING) STD DWG GF3 REQ'D.
STA 618+14, 3.5 LT
TOB EL=4562.60

REMOVE CATCH BASIN REQ'D
STA 618+14, CL

CONCRETE BARRIER - STEPPED PAVEMENT
TYPE REQ'D
(SEE R-449 WALL G)
MATCHLINE STA 616+00, CL TO
MATCHLINE STA 624+00, CL

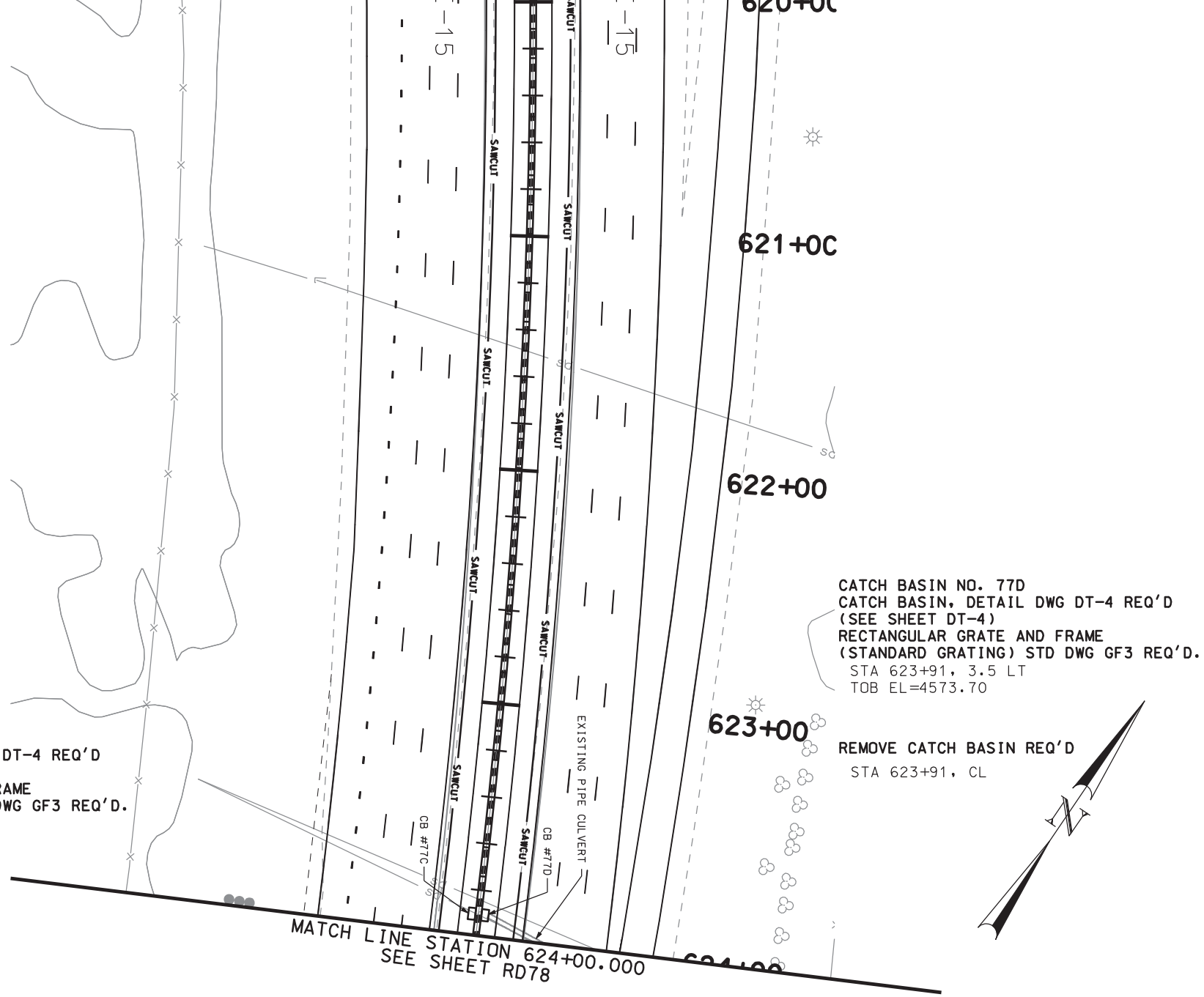


| | | | | | | | |
|---|---|---|---|---|---|---|---|
| SHEET NO. RD-77 | UTAH COUNTY | I-15; CORRIDOR IN UTAH COUNTY PLAN SHEET | UTAH DEPARTMENT OF TRANSPORTATION<br>REGION THREE -- OREM CITY, UTAH<br>ROADWAY DESIGN | | | | |
| | | PROJECT NUMBER SP-15-6(52)241 | APPROVAL RECOMM. DATE / PROJECT DESIGN ENGINEER | DESIGN JAH 02-05 | CHECK SMM 02-05 | REVIEW | |
| | | | APPROVED FOR USE BY UDOT DATE / PRECONSTRUCTION ENGINEER | DRAWN JAH 02-05 | CHECK SMM 02-05 | DATE | |
| | | | | QUANT. JAH 02-05 | CHECK SMM 02-05 | BY | |

| NO. | DATE | DESIGN REV. BY | MAPS CORR. BY | PARCELS AFFECTED | REQUEST BY | REMARKS |
|---|---|---|---|---|---|---|
| | | ORIGINAL SUBMISSION FOR AUTHORIZATION | | | | |
| | DATE | REVISIONS | | | | |

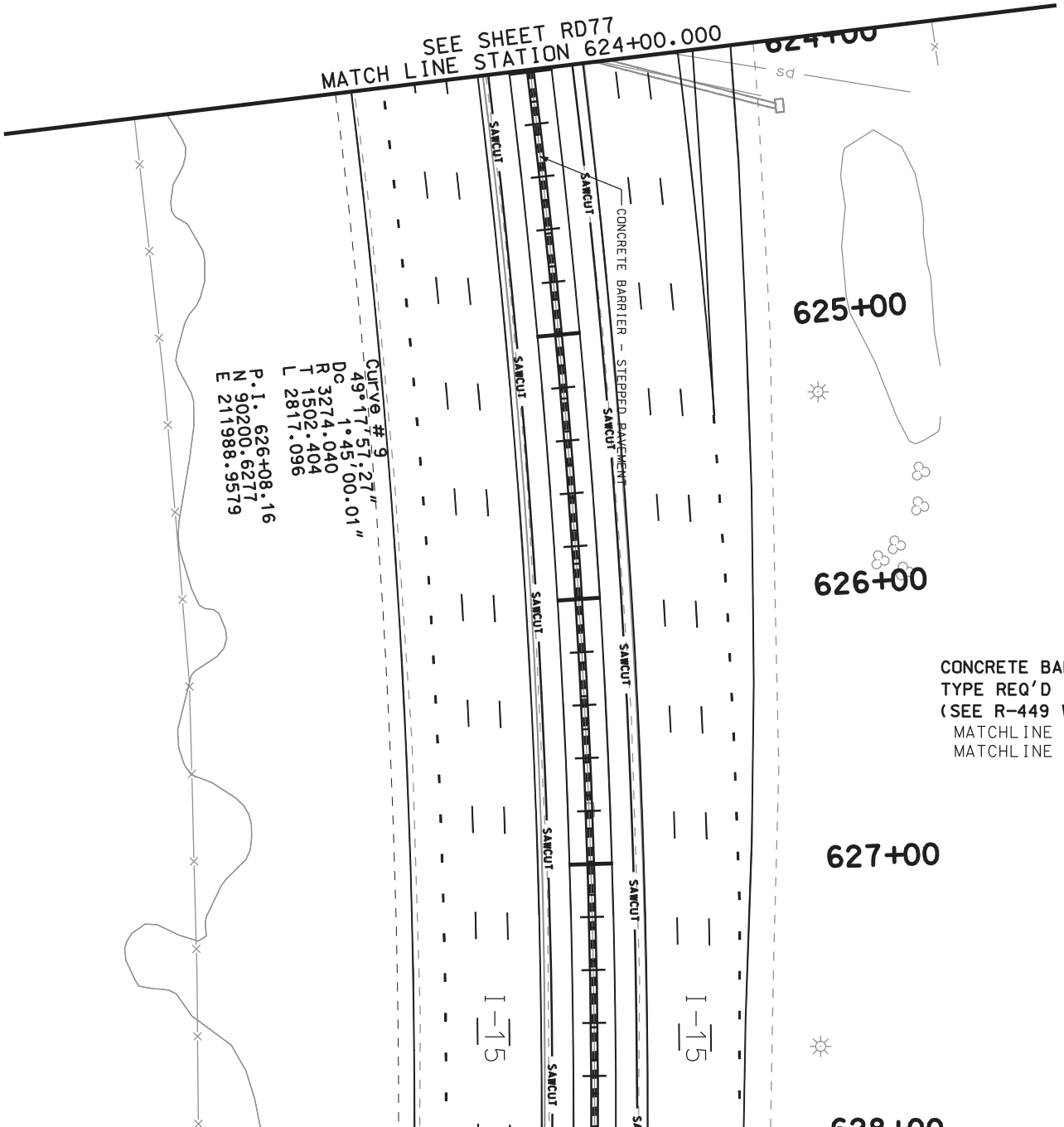


CONCRETE BARRIER - STEPPED PAVEMENT
TYPE REQ'D
(SEE R-449 WALL G)
MATCHLINE STA 624+00, CL TO
MATCHLINE STA 632+00, CL

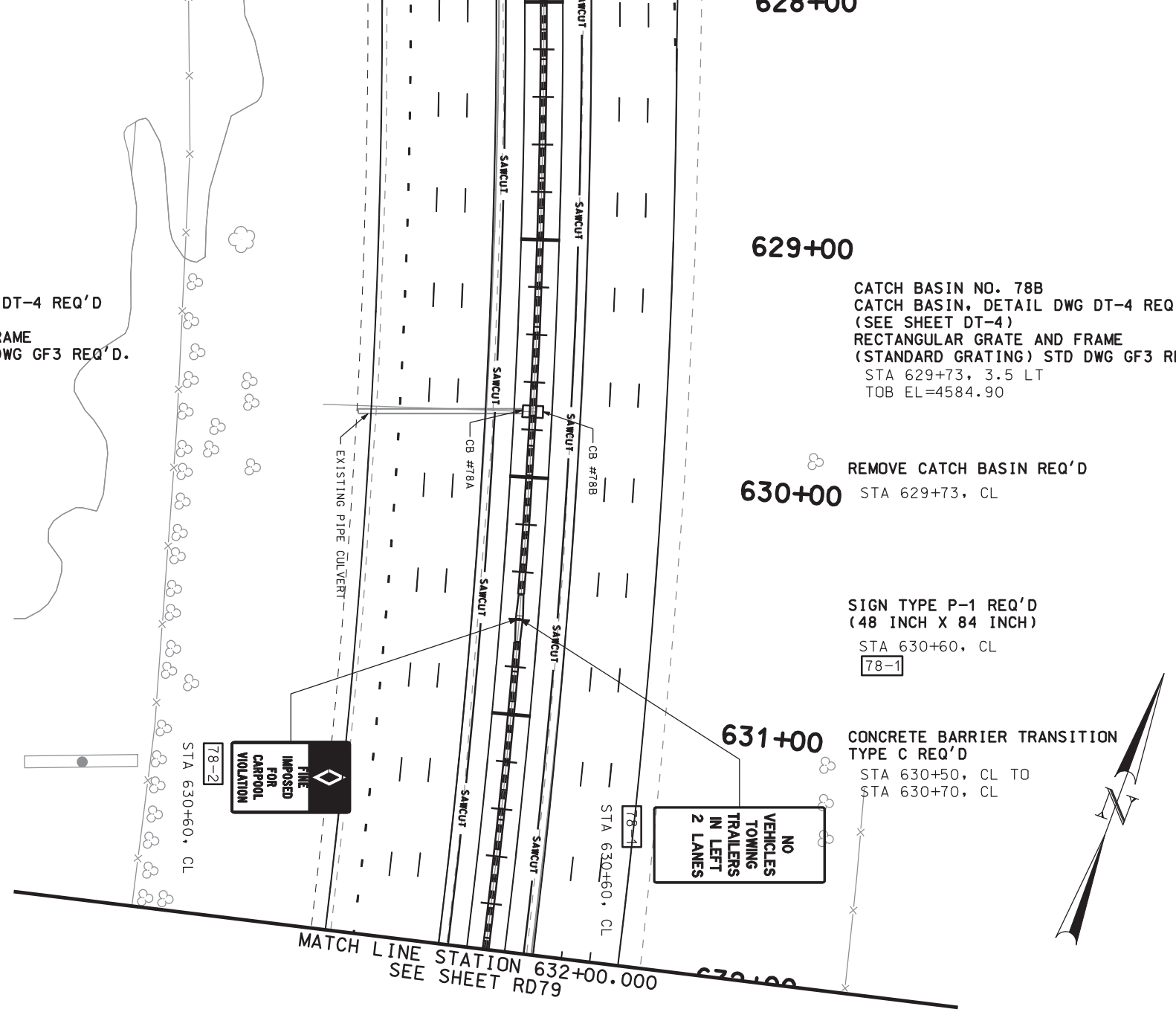


| | | | | | |
|---|---|---|---|---|---|
| SHEET NO. RD-78 | UTAH COUNTY | I-15; CORRIDOR IN UTAH COUNTY | UTAH DEPARTMENT OF TRANSPORTATION<br>REGION THREE -- OREM CITY, UTAH<br>ROADWAY DESIGN | | |
| | | PLAN SHEET | APPROVAL RECOMM. DATE / PROJECT DESIGN ENGINEER | DESIGN JAH 02-05 / CHECK SMM 02-05 | REVIEW |
| | | PROJECT NUMBER SP-15-6(52)241 | APPROVED FOR USE BY UDOT DATE / PRECONSTRUCTION ENGINEER | DRAWN JAH 02-05 / CHECK SMM 02-05 | DATE |
| | | | | QUANT. JAH 02-05 / CHECK SMM 02-05 | BY |

| NO. | DATE | DESIGN REV. BY | MAPS CORR. BY | PARCELS AFFECTED | REQUEST BY | REMARKS |
|---|---|---|---|---|---|---|
| | | ORIGINAL SUBMISSION FOR AUTHORIZATION | | | | |

DATE REVISIONS

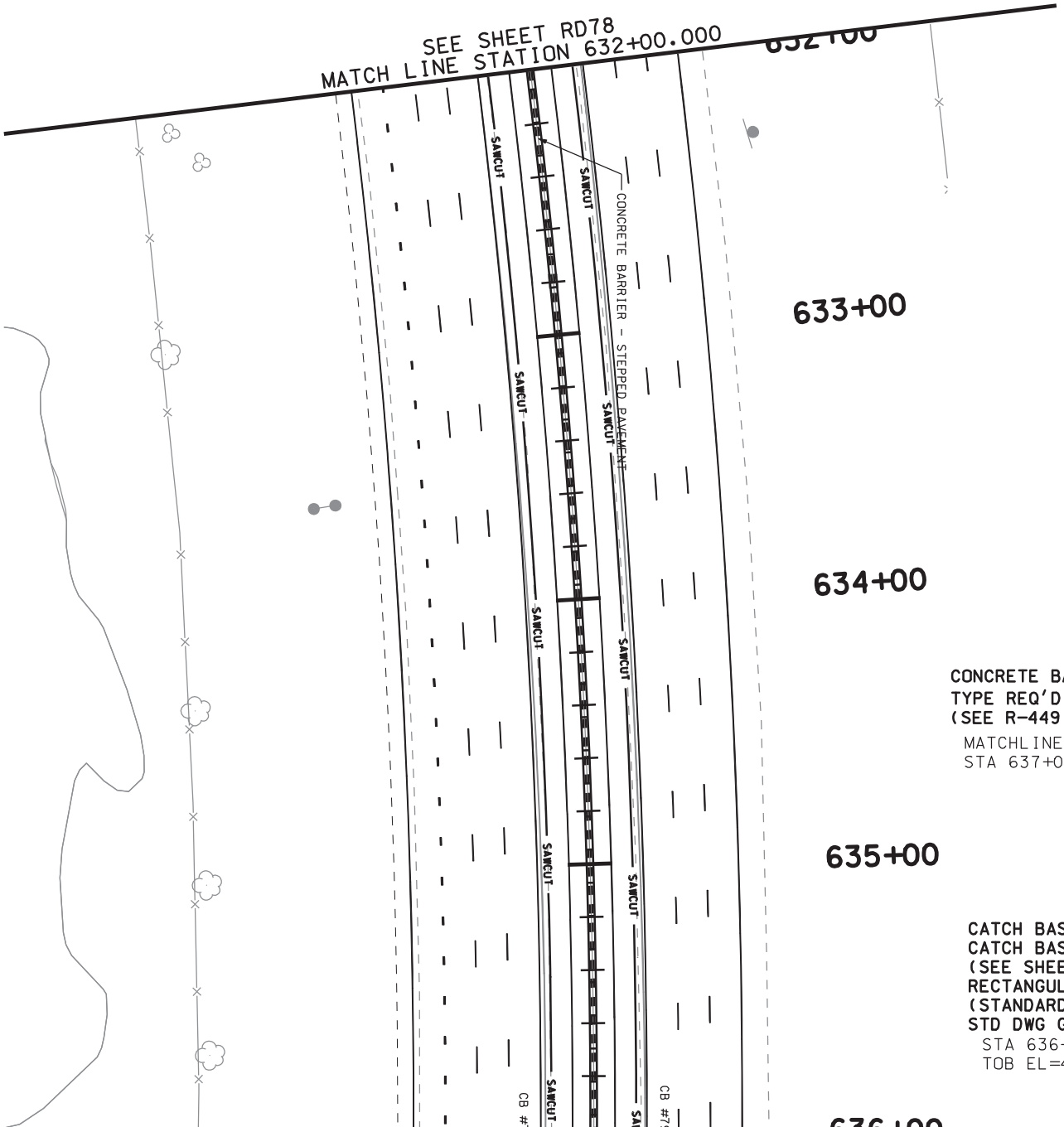


CONCRETE BARRIER - STEPPED PAVEMENT
TYPE REQ'D
(SEE R-449 WALL G)
MATCHLINE STA 632+00, CL TO
STA 637+00, CL

CATCH BASIN NO. 79B
CATCH BASIN, DETAIL DWG DT-4 REQ'D
(SEE SHEET DT-4)
RECTANGULAR GRATE AND FRAME
(STANDARD GRATING)
STD DWG GF3 REQ'D.
STA 636+20, 3.5 LT
TOB EL=4592. 40

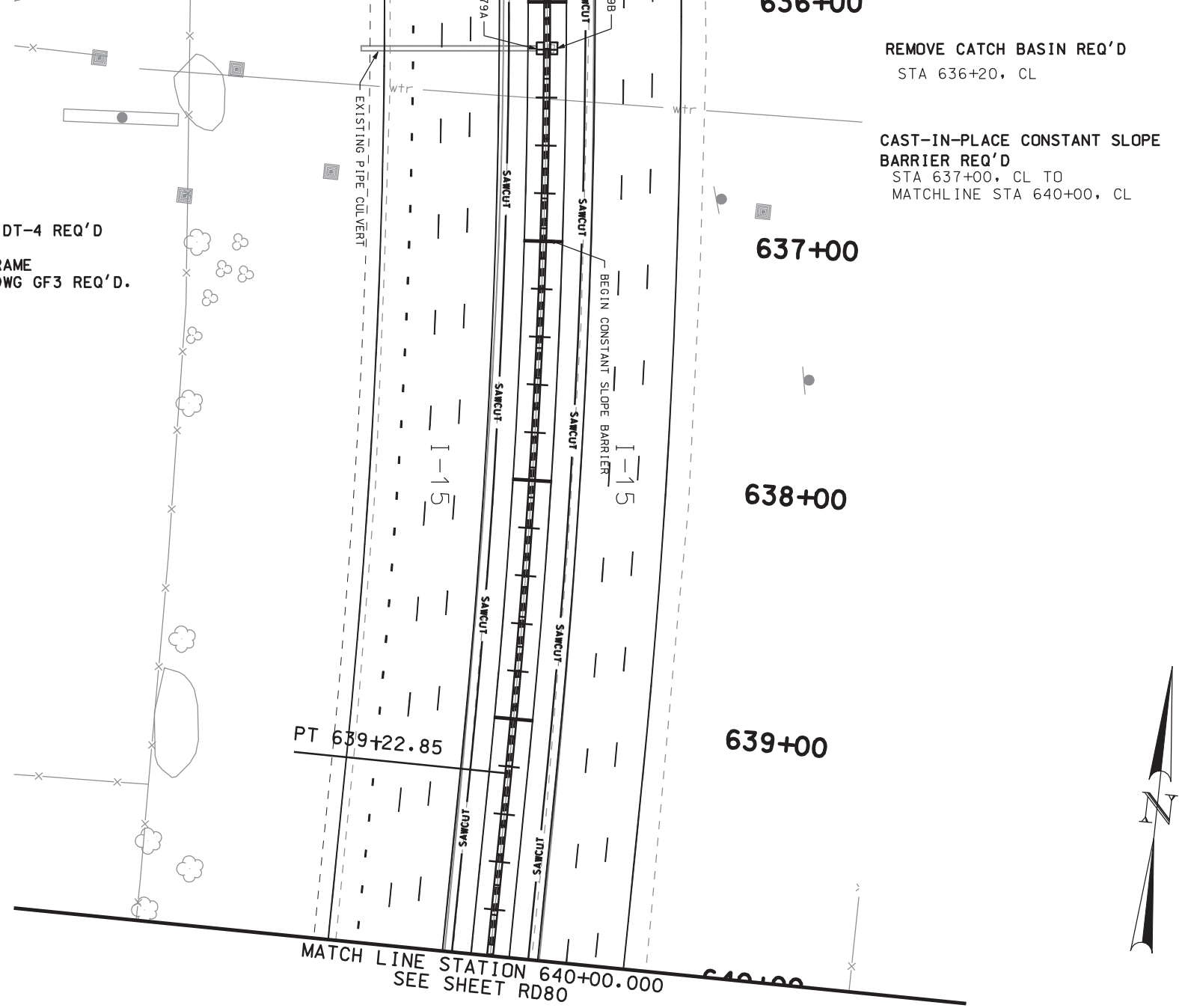


| | | | | | | | | |
|---|---|---|---|---|---|---|---|---|
| SHEET NO. RD-79 | UTAH COUNTY | I-15; CORRIDOR | UTAH DEPARTMENT OF TRANSPORTATION | | | | | |
| | | IN UTAH COUNTY | REGION THREE -- OREM CITY, UTAH | | | | | |
| | | PLAN SHEET | ROADWAY DESIGN | | | | | |
| | | | APPROVAL RECOMM. DATE / PROJECT DESIGN ENGINEER | DESIGN JAH 02-05 | CHECK SMM 02-05 | REVIEW | | |
| | | PROJECT NUMBER SP-15-6(52)241 | APPROVED FOR USE BY UDOT DATE / PRECONSTRUCTION ENGINEER | DRAWN JAH 02-05 | CHECK SMM 02-05 | DATE | | |
| | | | | QUANT. JAH 02-05 | CHECK SMM 02-05 | BY | | |

| NO. | DATE | DESIGN REV. BY | MAPS CORR. BY | PARCELS AFFECTED | REQUEST BY | REMARKS |
|---|---|---|---|---|---|---|
| | | ORIGINAL SUBMISSION FOR AUTHORIZATION | | | | |
| | DATE | REVISIONS | | | | |

SEE SHEET RD79
MATCH LINE STATION 640+00.000

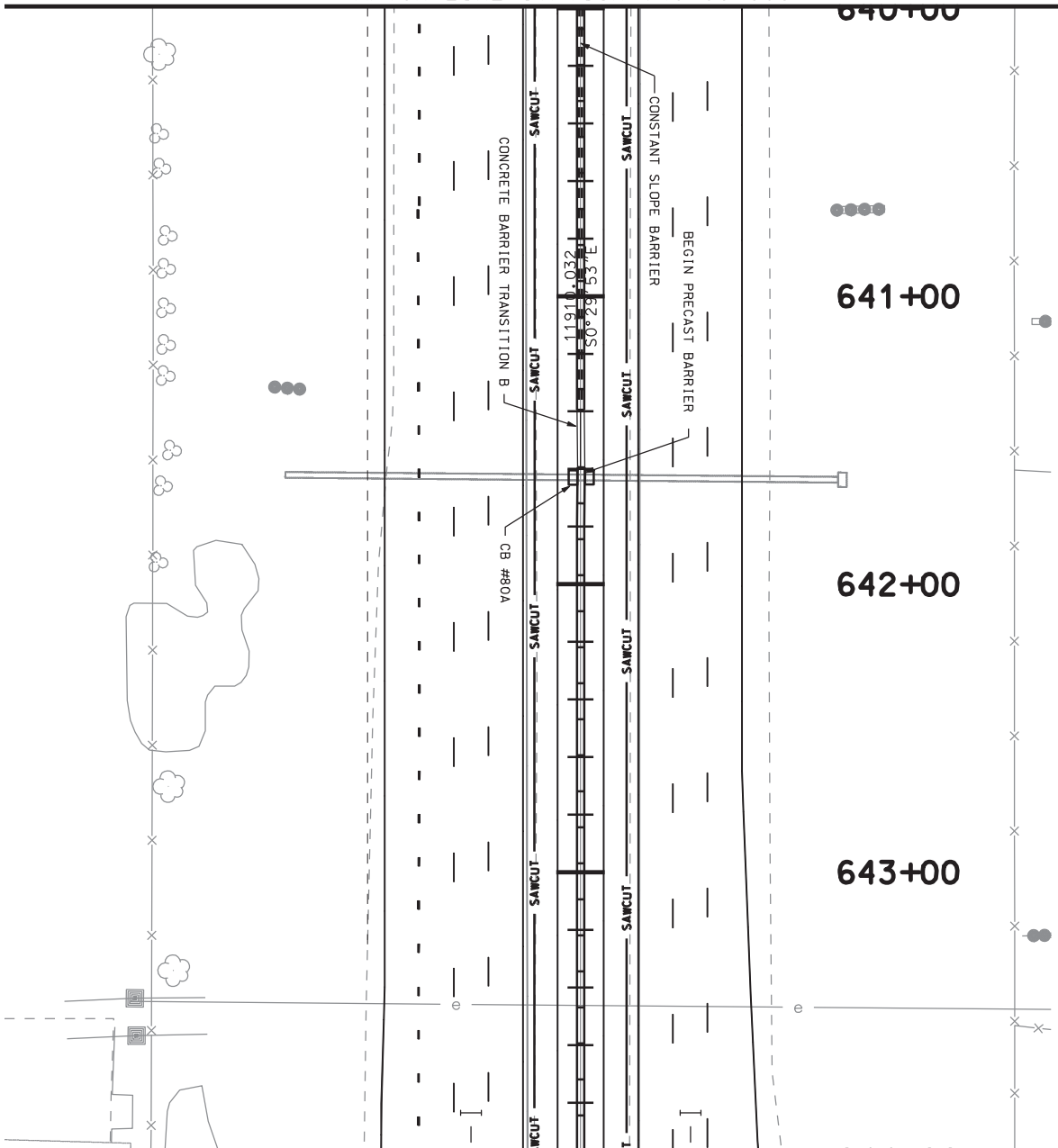


**CAST-IN-PLACE CONSTANT SLOPE BARRIER REQ'D**
MATCHLINE STA 640+00, CL TO
STA 641+40, CL

**CONCRETE BARRIER TRANSITION TYPE B REQ'D**
STA 641+40, CL TO
STA 641+60, CL

**PRECAST CONCRETE FULL BARRIER (NEW JERSEY SHAPE) REQ'D**
STA 641+60, CL TO
STA 662+00, CL

**CATCH BASIN NO. 80A**
**CATCH BASIN, DETAIL DWG DT-7 REQ'D**
**(SEE SHEET DT-7)**
**RECTANGULAR GRATE AND FRAME**
**(STANDARD GRATING)**
**STD DWG GF3 REQ'D (2).**
STA 641+60, CL
PROP EL=4596.18

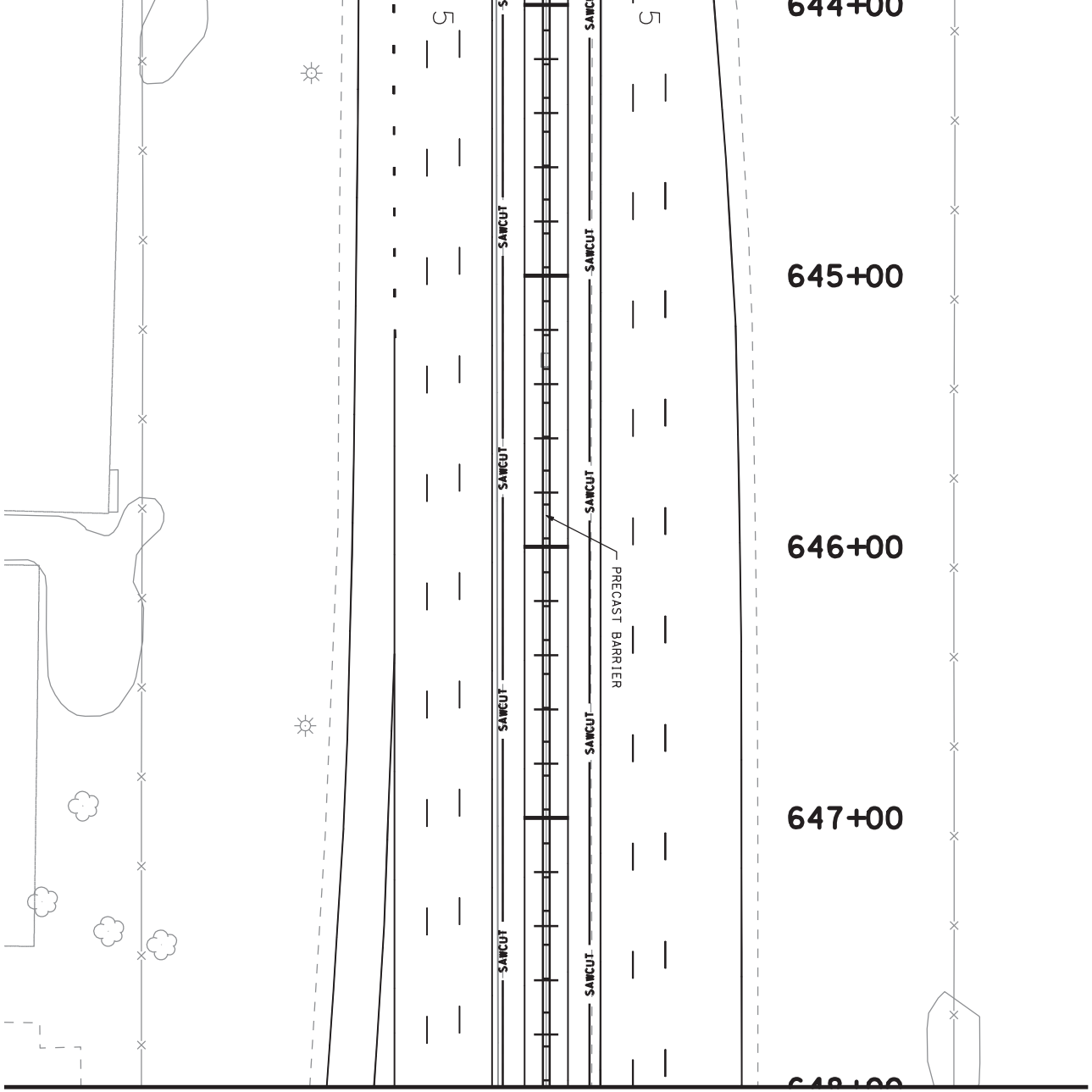


MATCH LINE STATION 648+00.000
SEE SHEET RD81

| | | | | | | |
|---|---|---|---|---|---|---|
| SHEET NO. RD-80 | UTAH COUNTY | I-15; CORRIDOR IN UTAH COUNTY | UTAH DEPARTMENT OF TRANSPORTATION<br>REGION THREE -- OREM CITY, UTAH<br>ROADWAY DESIGN | | | |
| | | PLAN SHEET | APPROVAL RECOMM. ____ DATE ____ PROJECT DESIGN ENGINEER | DESIGN JAH 02-05 | CHECK SMM 02-05 | REVIEW |
| | | PROJECT NUMBER SP-15-6(52)241 | APPROVED FOR USE BY UDOT ____ DATE ____ PRECONSTRUCTION ENGINEER | DRAWN JAH 02-05 | CHECK SMM 02-05 | DATE ____ |
| | | | | QUANT. JAH 02-05 | CHECK SMM 02-05 | BY ____ |

| NO. | DATE | DESIGN REV. BY | MAPS CORR. BY | PARCELS AFFECTED | REQUEST BY | REMARKS |
|---|---|---|---|---|---|---|
| | | ORIGINAL SUBMISSION FOR AUTHORIZATION | | | | |
| DATE | | REVISIONS | | | | |

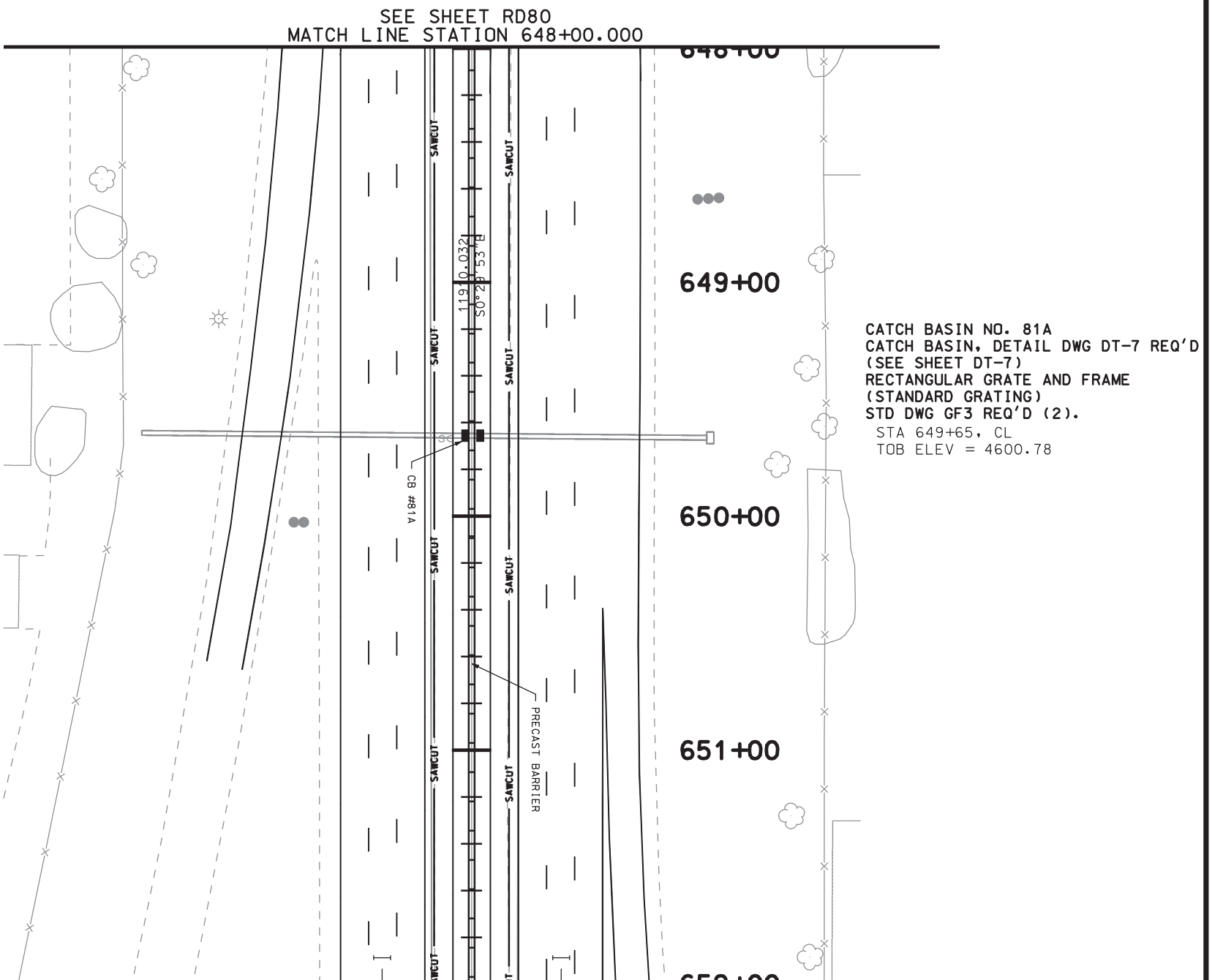
SEE SHEET RD80
MATCH LINE STATION 648+00.000
648+00
649+00
650+00
651+00
652+00
SAWCUT
SAWCUT
SAWCUT
SAWCUT
SAWCUT
SAWCUT
SAWCUT
SAWCUT
119+10.032
S0°20'53"E
CB #81A
PRECAST BARRIER
CATCH BASIN NO. 81A
CATCH BASIN, DETAIL DWG DT-7 REQ'D
(SEE SHEET DT-7)
RECTANGULAR GRATE AND FRAME
(STANDARD GRATING)
STD DWG GF3 REQ'D (2).
STA 649+65, CL
TOB ELEV = 4600.78

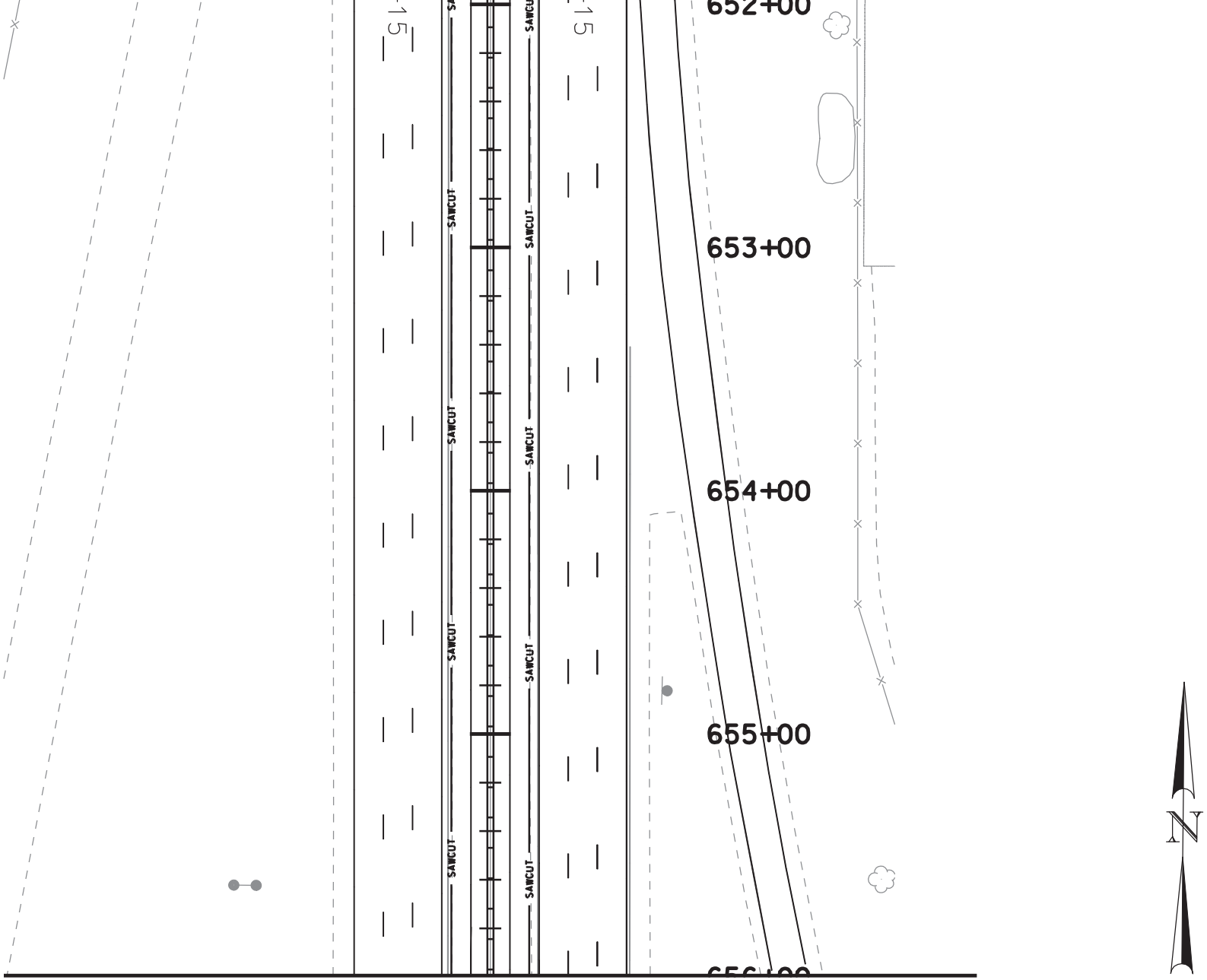


MATCH LINE STATION 656+00.000
SEE SHEET RD82

| | | | | | | |
|---|---|---|---|---|---|---|
| SHEET NO. RD-81 | UTAH COUNTY | I-15; CORRIDOR IN UTAH COUNTY | UTAH DEPARTMENT OF TRANSPORTATION<br>REGION THREE -- OREM CITY, UTAH<br>ROADWAY DESIGN | | | |
| | | PLAN SHEET | APPROVAL RECOMM. ____ DATE ____ PROJECT DESIGN ENGINEER | DESIGN JAH 02-05 | CHECK SMM 02-05 | REVIEW |
| | | PROJECT NUMBER SP-15-6(52)241 | APPROVED FOR USE BY UDOT ____ DATE ____ PRECONSTRUCTION ENGINEER | DRAWN JAH 02-05 | CHECK SMM 02-05 | DATE ____ |
| | | | | QUANT. JAH 02-05 | CHECK SMM 02-05 | BY ____ |

| NO. | DATE | DESIGN REV. BY | MAPS CORR. BY | PARCELS AFFECTED | REQUEST BY | REMARKS |
|---|---|---|---|---|---|---|
| | | ORIGINAL SUBMISSION FOR AUTHORIZATION | | | | |

DATE REVISIONS

SEE SHEET RD81
MATCH LINE STATION 656+00.000

656+00

657+00

658+00

659+00

660+00

I-15

PRECAST BARRIER

SAWCUT

N0°29'53"W

11910.032

REMOVE

FINE IMPOSED FOR CARPOOL VIOLATION

82-1

STA 657+00, CL

NO VEHICLES TOWING TRAILERS IN LEFT 2 LANES

82-2

STA 657+00, CL

SIGN TYPE P-1 REQ'D
(48 INCH X 84 INCH)
STA 657+00, CL 82-1

CONCRETE BARRIER TRANSITION
TYPE C REQ'D
STA 656+90, CL TO
STA 657+10, CL

SIGN TYPE P-1 REQ'D
(48 INCH X 84 INCH)
STA 657+00, CL
82-2

STORM SUMP REQ'D (SS-82)
MANHOLE FRAME AND GRATED
COVER STD GF1 REQ'D
(SEE SHEET DT-6)
STA 660+70, 2.0 RT
TOB ELEV = 4606.80

CATCH BASIN NO. 82A
CATCH BASIN, STD DWG CB-10 REQ'D
(SEE SHEET DT-6)
RECTANGULAR GRATE AND FRAME
(STANDARD GRATING) STD DWG GF3 REQ'D.
STA 660+70, 2.0 LT
TOB ELEV = 4606.80

12 INCH PIPE CULVERT, CLASS A REQ'D.
STA 660+70, 2.0 LT TO

STA 660+70, 2.0 RT

**12 INCH PIPE CULVERT, CLASS A REQ'D**
FROM STA 662+10, 3.5 RT
TO STA 662+10, 3.5 LT

**REMOVE CABLE END SECTION REQ'D**
STA 662+13 CL
STA 663+96 CL

**REMOVE GUARDRAIL REQ'D**
STA 658+05, RT TO
STA 662+20, RT

**REMOVE CRASH CUSHION REQ'D**
STA 658+05, RT

**CATCH BASIN NO. 82B**
**CATCH BASIN, DETAIL DWG DT-7 REQ'D**
**(SEE SHEET DT-7)**
**RECTANGULAR GRATE AND FRAME**
**(STANDARD GRATING) STD DWG GF3 REQ'D (2).**
STA 662+10, CL
TOB ELEV = 4607.04

**REMOVE CATCH BASIN REQ'D**
STA 662+10, CL

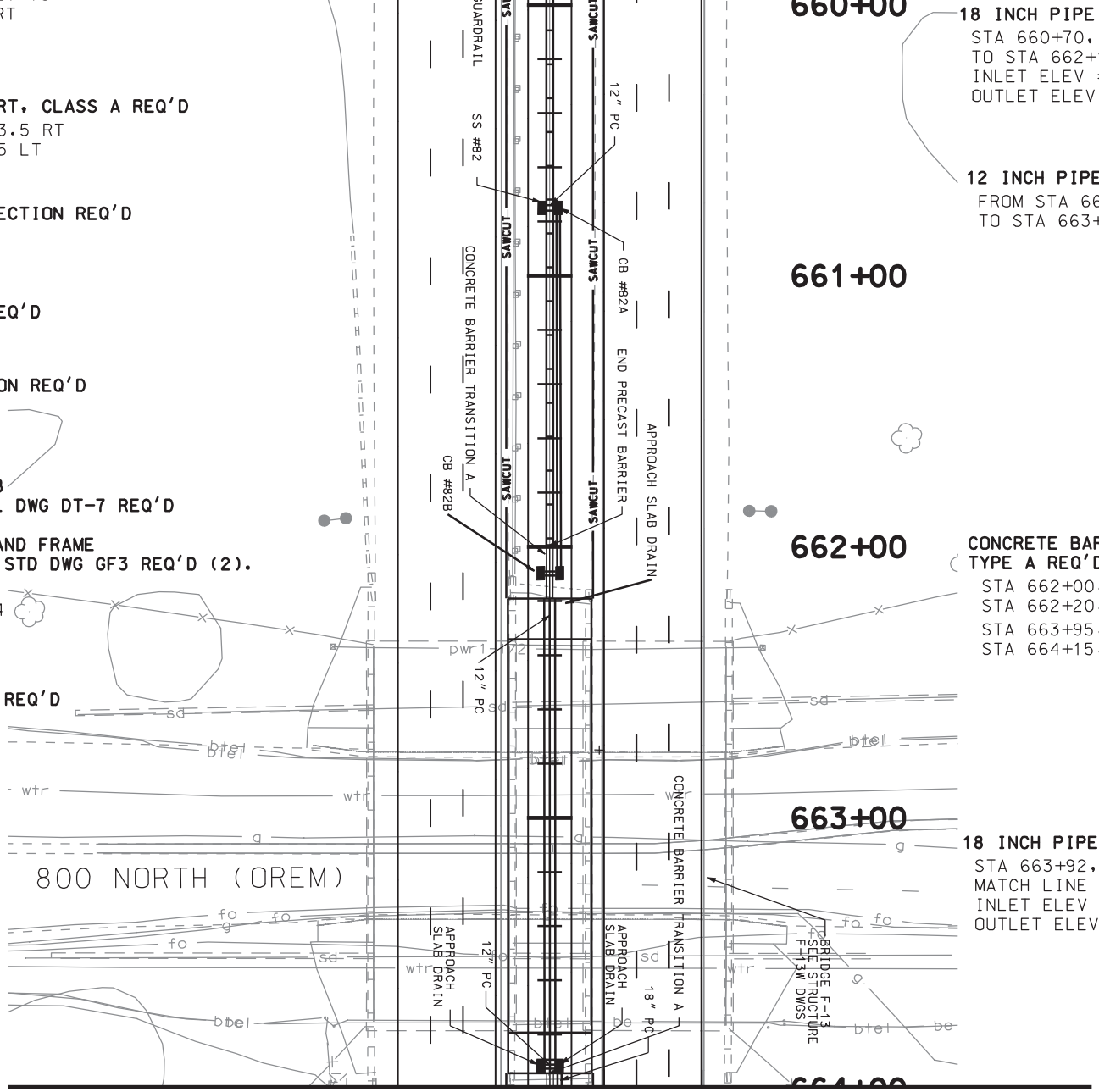


**18 INCH PIPE CULVERT, CLASS A REQ'D**
STA 660+70, 3.5 LT
TO STA 662+10, 2.0 LT
INLET ELEV = 4603.06
OUTLET ELEV = 4602.80

**12 INCH PIPE CULVERT, CLASS A REQ'D**
FROM STA 663+92, 3.5 RT
TO STA 663+92, 3.5 LT

**CONCRETE BARRIER TRANSITION**
**TYPE A REQ'D**
STA 662+00, CL TO
STA 662+20, CL
STA 663+95, CL TO
STA 664+15, CL

**18 INCH PIPE CULVERT, CLASS A REQ'D**
STA 663+92, 3.5 LT TO
MATCH LINE STA 664+00, LT
INLET ELEV = 4602.3
OUTLET ELEV = 4600.40

N

MATCH LINE STATION 664+00.000
SEE SHEET RD83

| | | | | | |
|---|---|---|---|---|---|
| I-15; CORRIDOR | UTAH DEPARTMENT OF TRANSPORTATION | | | | |
| IN UTAH COUNTY | REGION THREE -- OREM CITY, UTAH | | | | |
| PLAN SHEET | ROADWAY DESIGN | | | | |
| PROJECT NUMBER SP-15-6(52)241 | APPROVAL RECOMM. DATE / PROJECT DESIGN ENGINEER | DESIGN JAH 02-05 | CHECK SMM 02-05 | REVIEW | |
| | APPROVED FOR USE BY UDOT DATE / PRECONSTRUCTION ENGINEER | DRAWN JAH 02-05 | CHECK SMM 02-05 | DATE | |
| | | QUANT. JAH 02-05 | CHECK SMM 02-05 | BY | |

| NO. | DATE | DESIGN REV. BY | MAPS CORR. BY | PARCELS AFFECTED | REQUEST BY | REMARKS |
|---|---|---|---|---|---|---|
| | | ORIGINAL SUBMISSION FOR AUTHORIZATION | | | | |
| DATE | | REVISIONS | | | | |

UTAH COUNTY

SHEET NO. RD-82

SEE SHEET RD82
MATCH LINE STATION 664+00.000

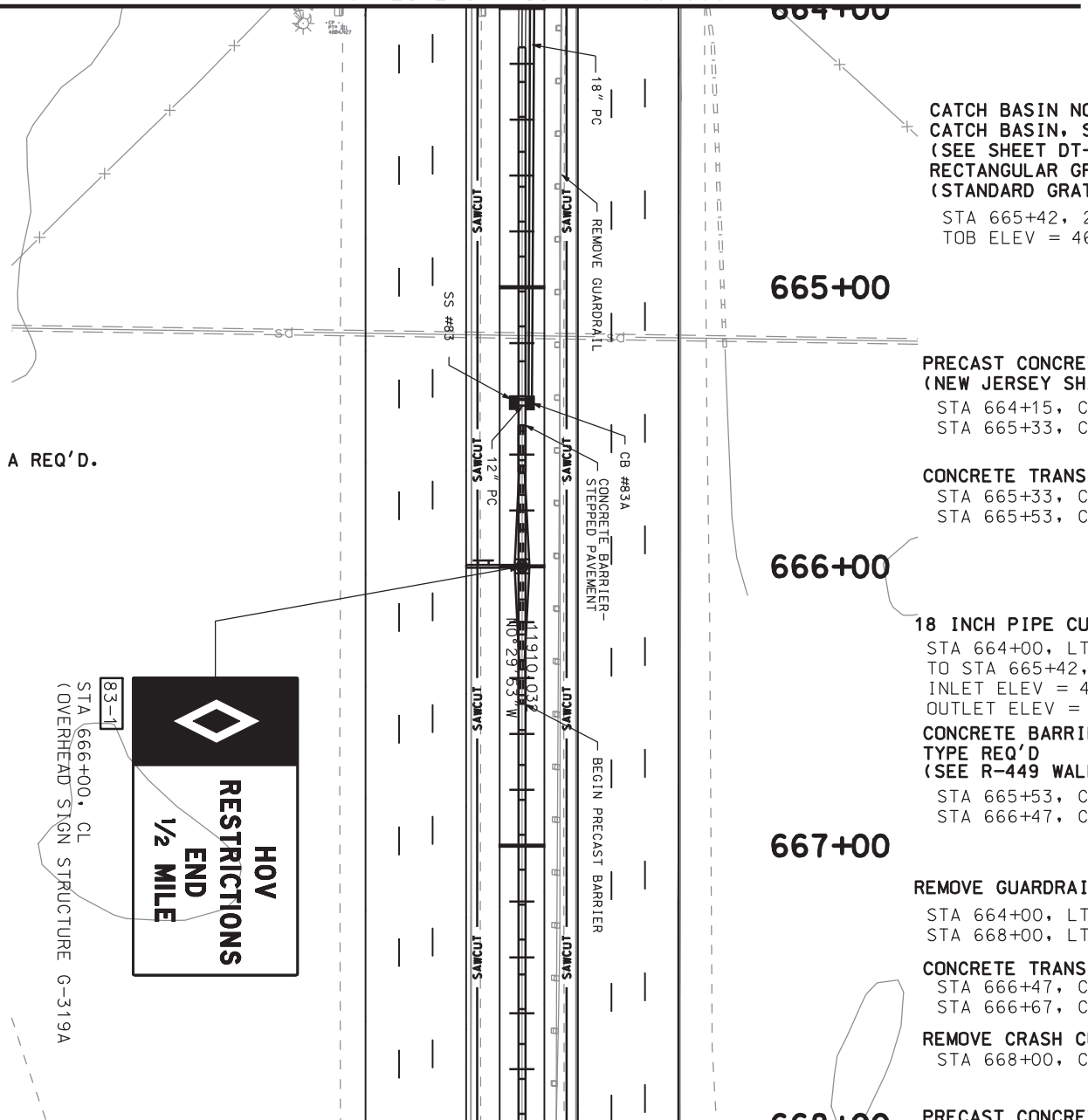


STORM SUMP REQ'D (SS-83)
MANHOLE FRAME AND GRATED
COVER STD GF1 REQ'D
(SEE SHEET DT-6)
STA 665+42, 2.0 RT
TOB ELEV = 4604.40

12 INCH PIPE CULVERT, CLASS A REQ'D.
STA 665+42, 2.0 LT TO
STA 665+42, 2.0 RT

RELOCATE SIGN REQ'D
FROM POINT OF THE MOUNTAIN
TO STA 666+00, CL
83-1

CATCH BASIN NO. 83A
CATCH BASIN, STD DWG CB-10 REQ'D
(SEE SHEET DT-6)
RECTANGULAR GRATE AND FRAME
(STANDARD GRATING) STD DWG GF3 REQ'D.
STA 665+42, 2.0 LT
TOB ELEV = 4604.40

PRECAST CONCRETE FULL BARRIER
(NEW JERSEY SHAPE) REQ'D
STA 664+15, CL TO
STA 665+33, CL

CONCRETE TRANSITION TYPE B REQ'D
STA 665+33, CL TO
STA 665+53, CL

18 INCH PIPE CULVERT, CLASS A REQ'D
STA 664+00, LT
TO STA 665+42, 2.0 LT
INLET ELEV = 4602.40
OUTLET ELEV = 4600.40

CONCRETE BARRIER-STEPPED PAVEMENT
TYPE REQ'D
(SEE R-449 WALL H)
STA 665+53, CL TO
STA 666+47, CL

REMOVE GUARDRAIL REQ'D
STA 664+00, LT TO
STA 668+00, LT

CONCRETE TRANSITION TYPE B REQ'D
STA 666+47, CL TO
STA 666+67, CL

REMOVE CRASH CUSHION REQ'D
STA 668+00, CL

PRECAST CONCRETE FULL BARRIER

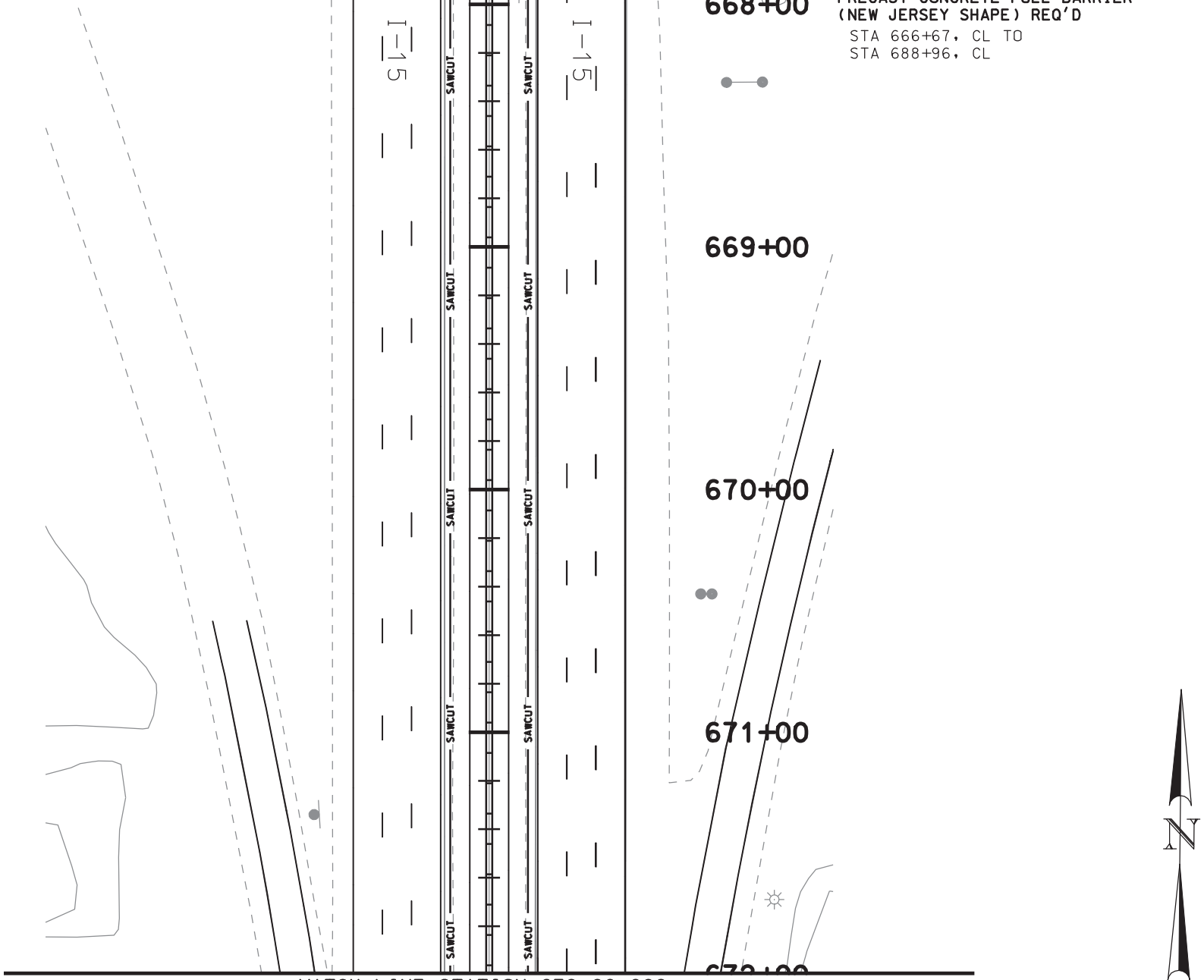


MATCH LINE STATION 672+00.000
SEE SHEET RD84

| | | | | | | | | | | | |
|---|---|---|---|---|---|---|---|---|---|---|---|
| SHEET NO. RD-83 | UTAH COUNTY | I-15; CORRIDOR IN UTAH COUNTY PLAN SHEET | UTAH DEPARTMENT OF TRANSPORTATION<br>REGION THREE -- OREM CITY, UTAH<br>ROADWAY DESIGN | | | | | | | | |
| | | PROJECT NUMBER SP-15-6(52)241 | APPROVAL RECOMM. DATE PROJECT DESIGN ENGINEER | DESIGN JAH 02-05 | CHECK SMM 02-05 | REVIEW | | | | | |
| | | | APPROVED FOR USE BY UDOT DATE PRECONSTRUCTION ENGINEER | DRAWN JAH 02-05 | CHECK SMM 02-05 | DATE | NO. | DATE | DESIGN REV. BY | MAPS CORR. BY | PARCELS AFFECTED | REQUEST BY | REMARKS |
| | | | | QUANT. JAH 02-05 | CHECK SMM 02-05 | BY | | ORIGINAL SUBMISSION FOR AUTHORIZATION | | | |
| | | | | | | | DATE | REVISIONS | | | |

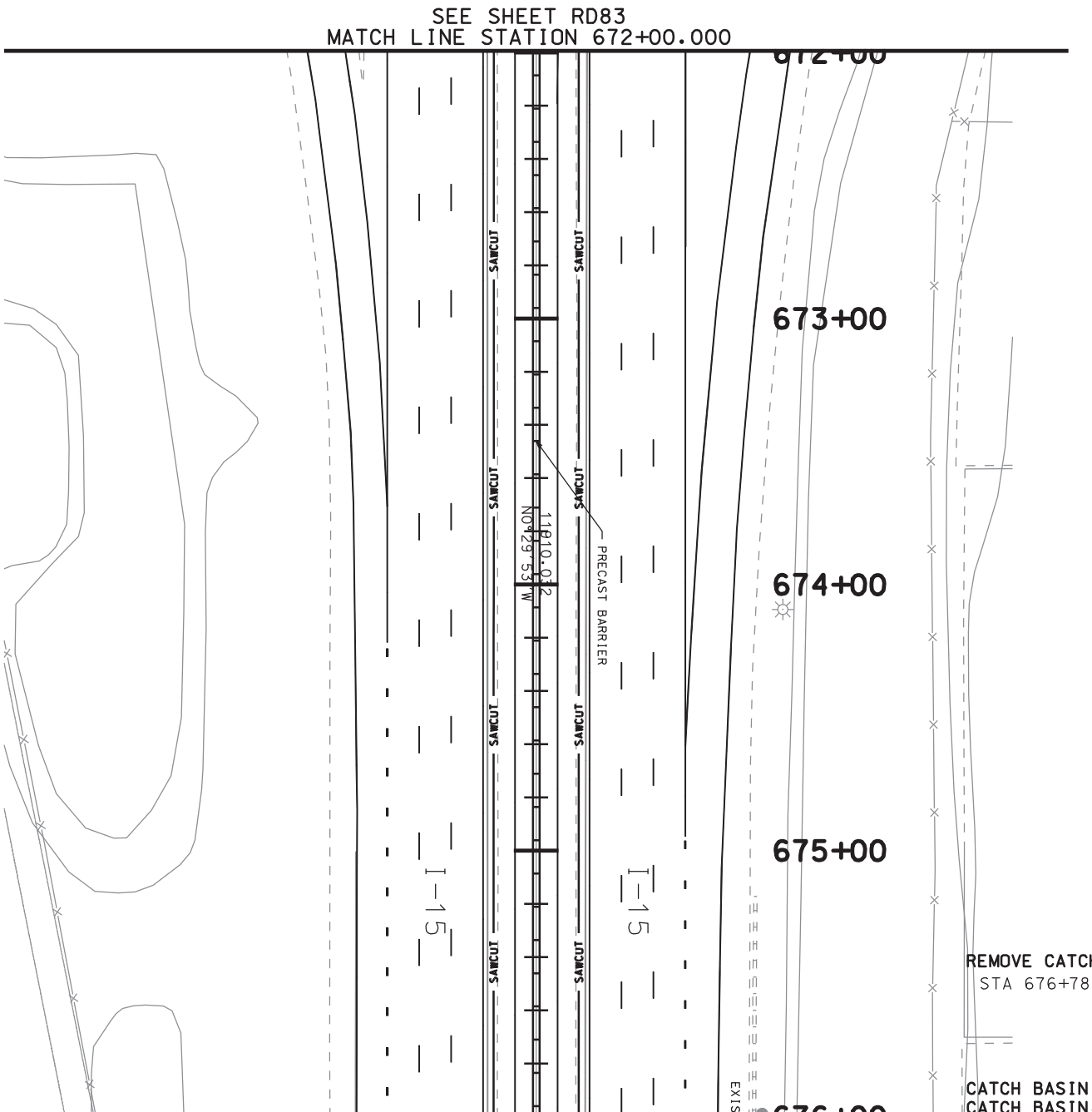
SEE SHEET RD83
MATCH LINE STATION 672+00.000
672+00
673+00
674+00
675+00
676+00
SAWCUT
SAWCUT
SAWCUT
SAWCUT
SAWCUT
SAWCUT
PRECAST BARRIER
11810.012
N029°53'W
I-15
I-15
EXISTING
REMOVE CATCH BASIN REQ'D
STA 676+78, CL
CATCH BASIN NO. 84A
CATCH BASIN DETAIL DWG DT-7 REQ'D

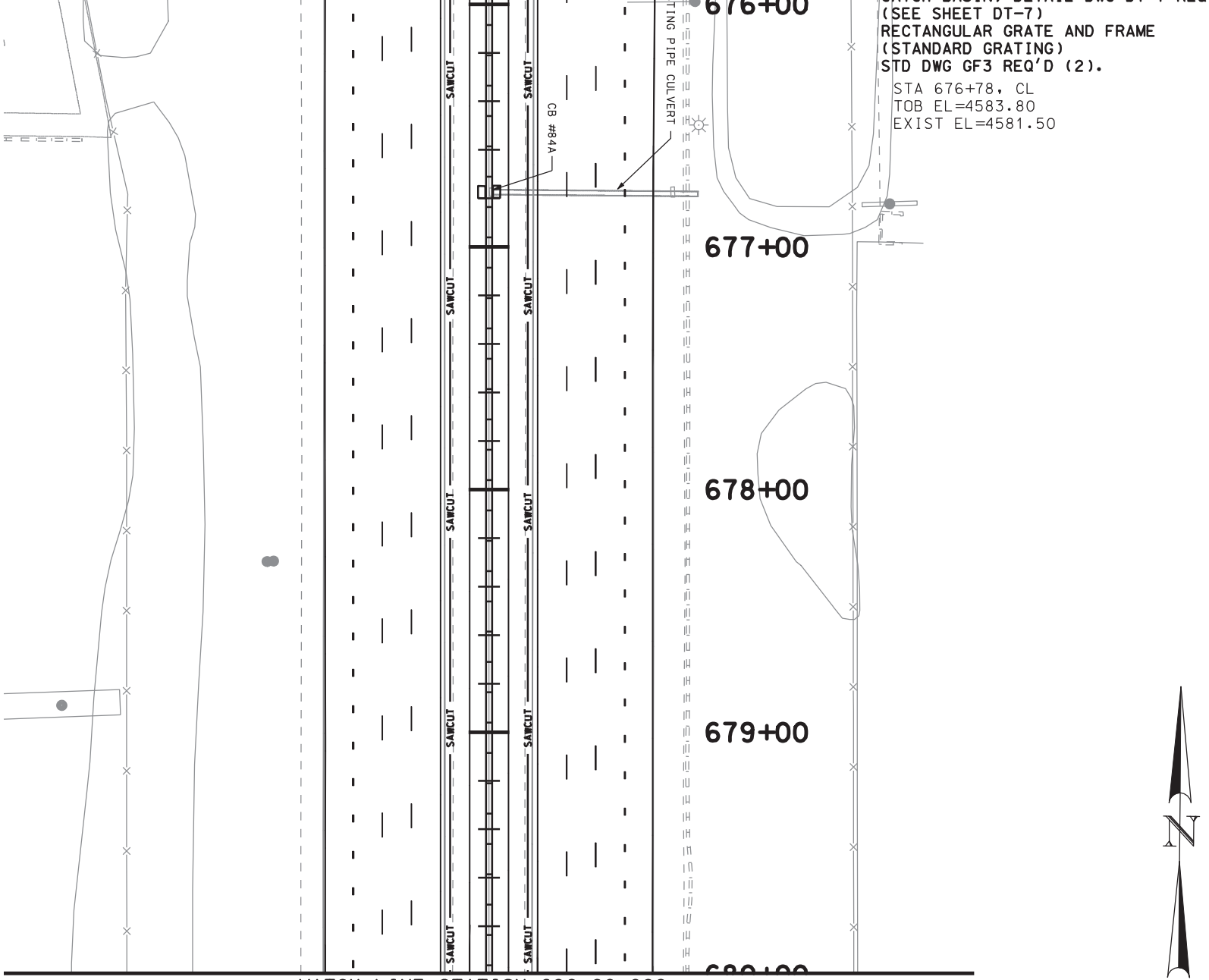


MATCH LINE STATION 680+00.000
SEE SHEET RD85

| | | | | | |
|---|---|---|---|---|---|
| I-15; CORRIDOR | UTAH DEPARTMENT OF TRANSPORTATION | | | | |
| IN UTAH COUNTY | REGION THREE -- OREM CITY, UTAH | | | | |
| PLAN SHEET | ROADWAY DESIGN | | | | |
| | APPROVAL RECOMM. DATE / PROJECT DESIGN ENGINEER | DESIGN JAH 02-05 | CHECK SMM 02-05 | REVIEW | |
| | APPROVED FOR USE BY UDOT DATE / PRECONSTRUCTION ENGINEER | DRAWN JAH 02-05 | CHECK SMM 02-05 | DATE | |
| PROJECT NUMBER SP-15-6(52)241 | | QUANT. JAH 02-05 | CHECK SMM 02-05 | BY | |

| NO. | DATE | DESIGN REV. BY | MAPS CORR. BY | PARCELS AFFECTED | REQUEST BY | REMARKS |
|---|---|---|---|---|---|---|
| | | ORIGINAL SUBMISSION FOR AUTHORIZATION | | | | |
| DATE | | REVISIONS | | | | |

UTAH COUNTY

SHEET NO. RD-84

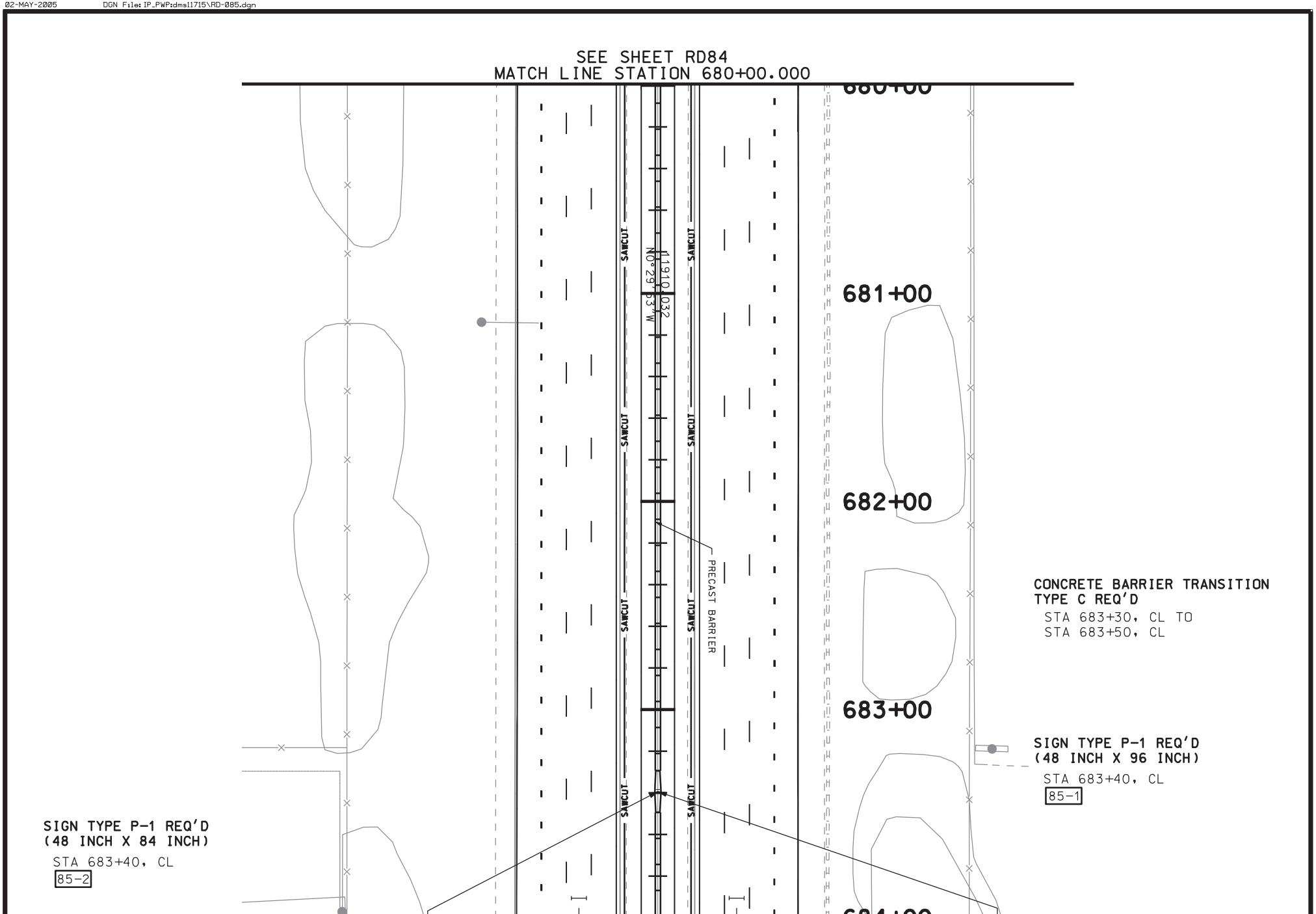
SEE SHEET RD84
MATCH LINE STATION 680+00.000
680+00
681+00
682+00
683+00
684+00
SAWCUT
SAWCUT
SAWCUT
SAWCUT
SAWCUT
SAWCUT
N0°29'53"W
11910.032
PRECAST BARRIER
CONCRETE BARRIER TRANSITION
TYPE C REQ'D
STA 683+30, CL TO
STA 683+50, CL
SIGN TYPE P-1 REQ'D
(48 INCH X 96 INCH)
STA 683+40, CL
85-1
SIGN TYPE P-1 REQ'D
(48 INCH X 84 INCH)
STA 683+40, CL
85-2

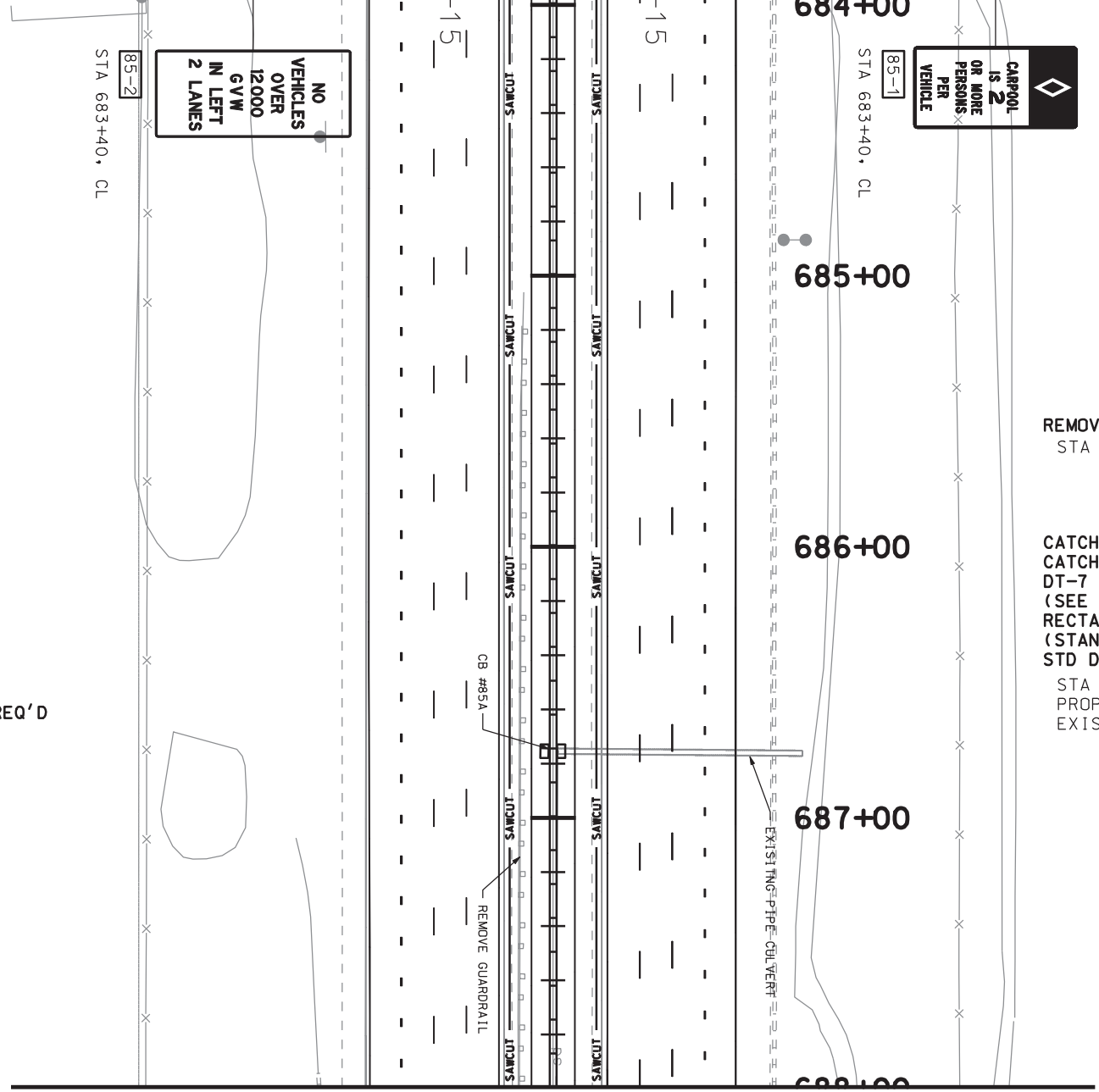


MATCH LINE STATION 688+00.000
SEE SHEET RD86

| | | | | | |
|---|---|---|---|---|---|
| SHEET NO. RD-85 | UTAH COUNTY | I-15; CORRIDOR IN UTAH COUNTY | UTAH DEPARTMENT OF TRANSPORTATION<br>REGION THREE -- OREM CITY, UTAH<br>ROADWAY DESIGN | | |
| | | PLAN SHEET | APPROVAL RECOMM. ____ DATE ____ PROJECT DESIGN ENGINEER | DESIGN JAH 02-05 / CHECK SMM 02-05 | REVIEW |
| | | PROJECT NUMBER SP-15-6(52)241 | APPROVED FOR USE BY UDOT ____ DATE ____ PRECONSTRUCTION ENGINEER | DRAWN JAH 02-05 / CHECK SMM 02-05 | DATE ____ |
| | | | | QUANT. JAH 02-05 / CHECK SMM 02-05 | BY ____ |

| NO. | DATE | DESIGN REV. BY | MAPS CORR. BY | PARCELS AFFECTED | REQUEST BY | REMARKS |
|---|---|---|---|---|---|---|
| | | ORIGINAL SUBMISSION FOR AUTHORIZATION | | | | |

DATE REVISIONS

SEE SHEET RD85
MATCH LINE STATION 688+00.000

**REMOVE GUARDRAIL REQ'D**
STA 685+40, RT TO
STA 689+15, RT

**CATCH BASIN NO. 86A**
**CATCH BASIN, DETAIL DWG DT-7 REQ'D**
**(SEE SHEET DT-7)**
**RECTANGULAR GRATE AND FRAME**
**(STANDARD GRATING)**
**STD DWG GF3 REQ'D (2).**
STA 688+78, CL
TOB EL=4577.80
FL EL=4575.70

**REMOVE CATCH BASIN REQ'D**
STA 688+78, CL

**REMOVE CABLE END SECTION REQ'D**
STA 689+14 CL
STA 690+83 CL

**STORM SUMP REQ'D (NO. SS-86)**
**MANHOLE FRAME AND GRATED**
**COVER STD GF1 REQ'D**
**(SEE SHEET DT-6)**
STA 692+31, 2.0 RT
TOB ELEV = 4575.10

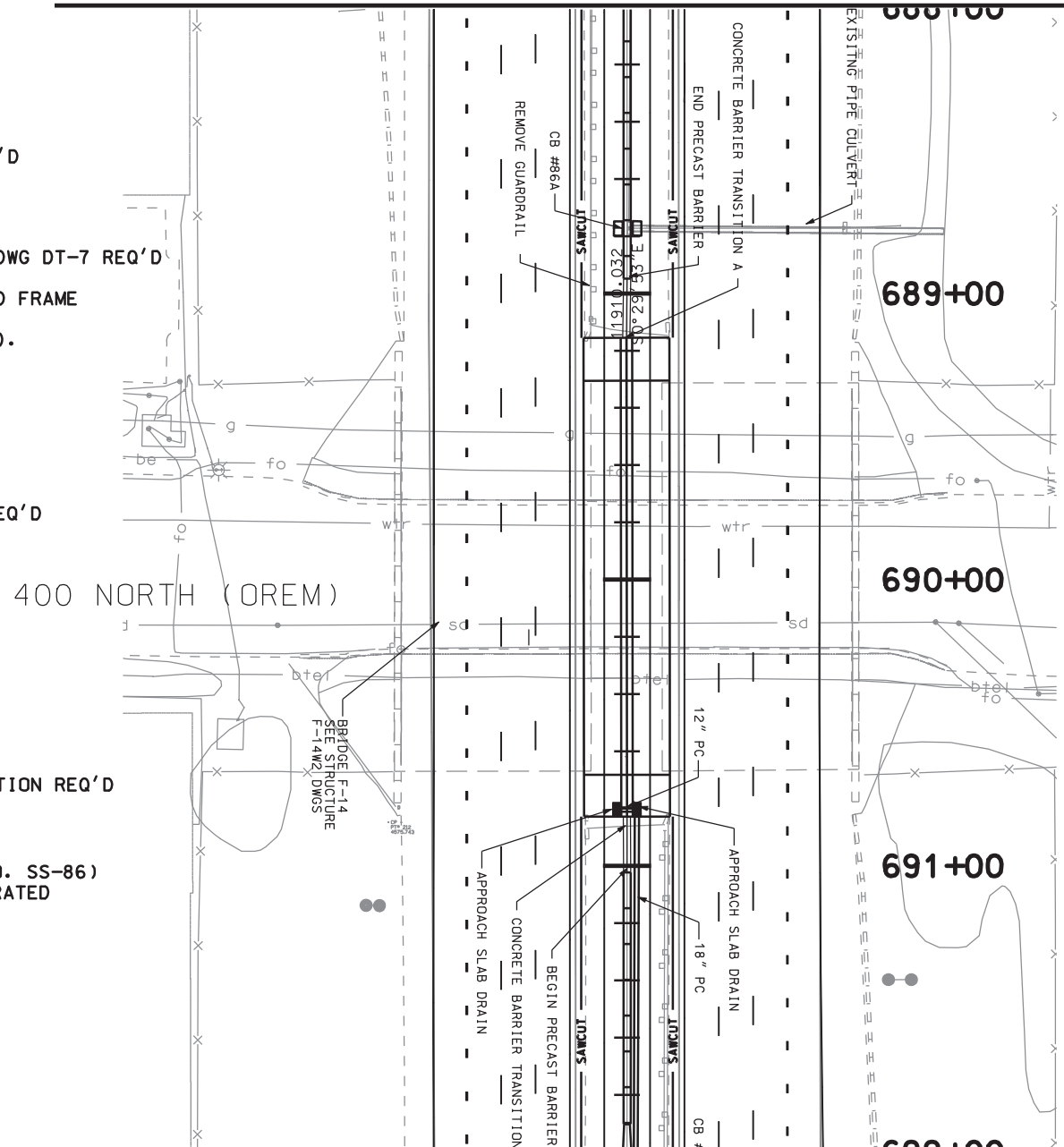


**12 INCH PIPE CULVERT, CLASS A REQ'D**
STA 690+81, 3.5 RT
TO STA 690+81, 3.5 LT

**CONCRETE BARRIER TRANSITION**
**TYPE A REQ'D**
STA 688+96, CL TO
STA 689+16, CL
STA 690+83, CL TO
STA 691+03, CL

**PRECAST CONCRETE FULL BARRIER**
**(NEW JERSEY SHAPE) REQ'D**
STA 691+03, CL TO
STA 715+53, CL

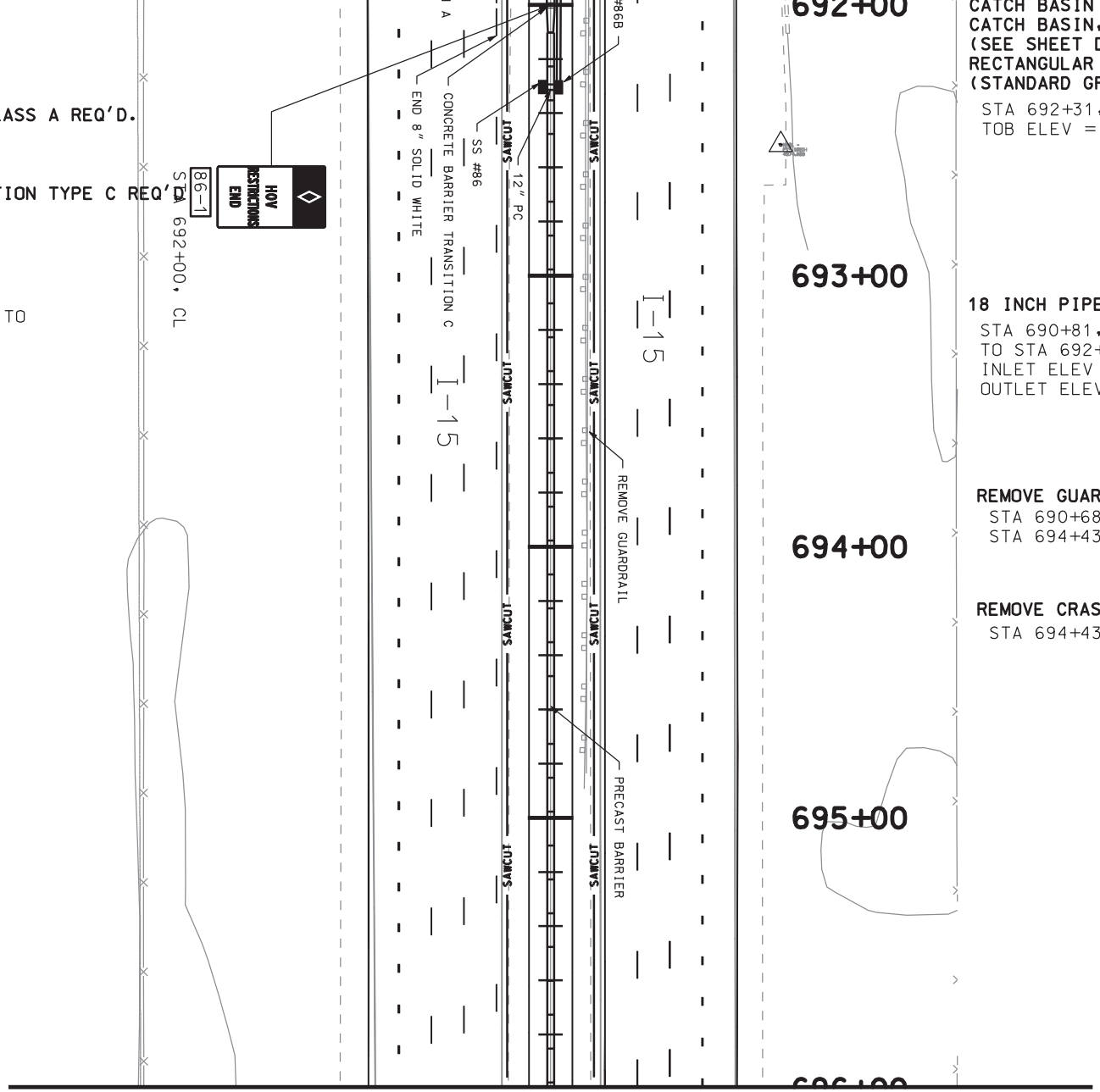


MATCH LINE STATION 696+00.000
SEE SHEET RD87

| | | | | | |
|---|---|---|---|---|---|
| I-15; CORRIDOR | UTAH DEPARTMENT OF TRANSPORTATION | | | | |
| IN UTAH COUNTY | REGION THREE -- OREM CITY, UTAH | | | | |
| PLAN SHEET | ROADWAY DESIGN | | | | |
| | APPROVAL RECOMM. DATE / PROJECT DESIGN ENGINEER | DESIGN JAH 02-05 | CHECK SMM 02-05 | REVIEW | |
| | | DRAWN JAH 02-05 | CHECK SMM 02-05 | DATE | |
| PROJECT NUMBER SP-15-6(52)241 | APPROVED FOR USE BY UDOT DATE / PRECONSTRUCTION ENGINEER | QUANT. JAH 02-05 | CHECK SMM 02-05 | BY | |

| NO. | DATE | DESIGN REV. BY | MAPS CORR. BY | PARCELS AFFECTED | REQUEST BY | REMARKS |
|---|---|---|---|---|---|---|
| | | ORIGINAL SUBMISSION FOR AUTHORIZATION | | | | |

DATE REVISIONS

UTAH COUNTY

SHEET NO. RD-86

SEE SHEET RD86
MATCH LINE STATION 696+00.000

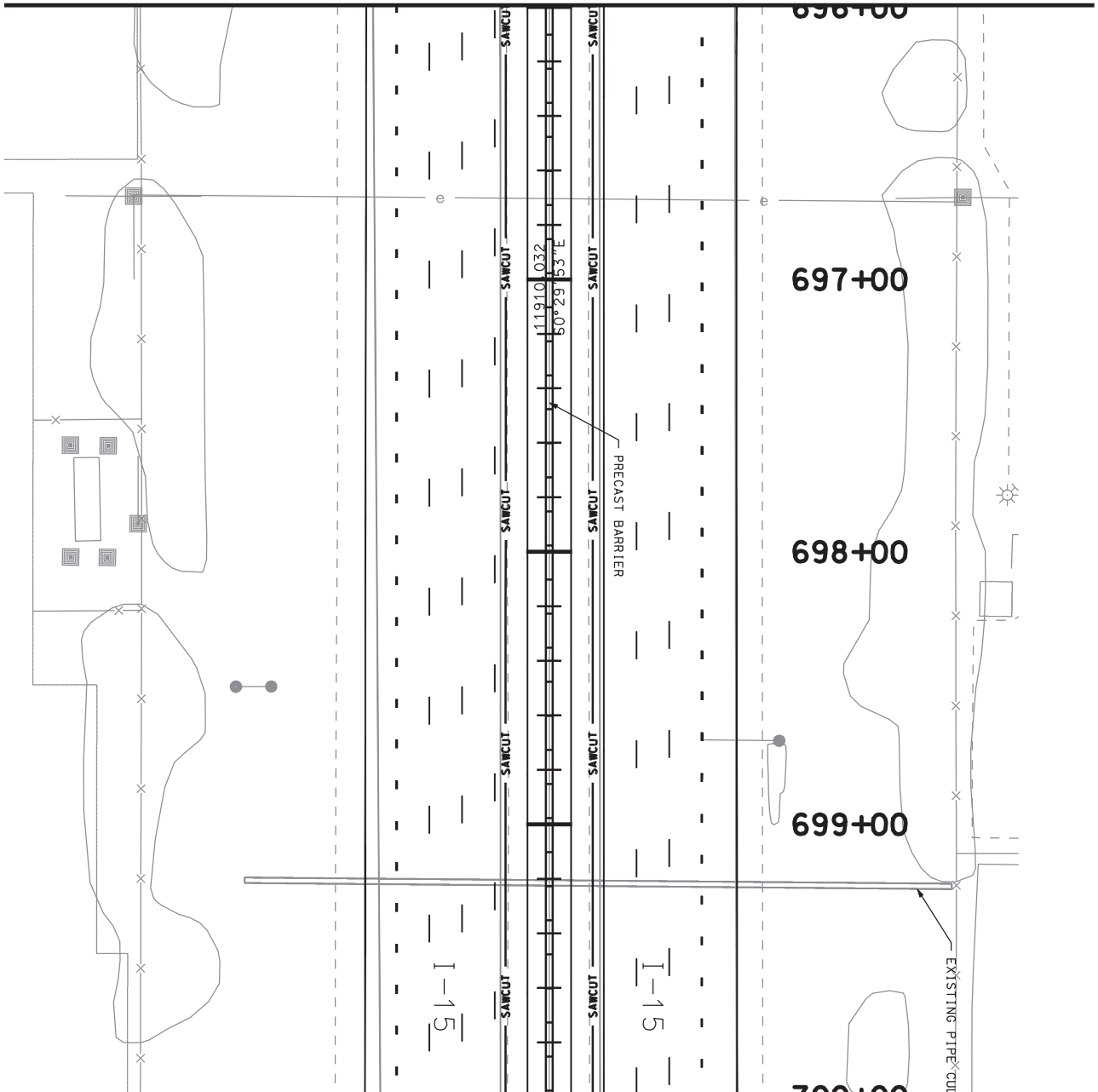

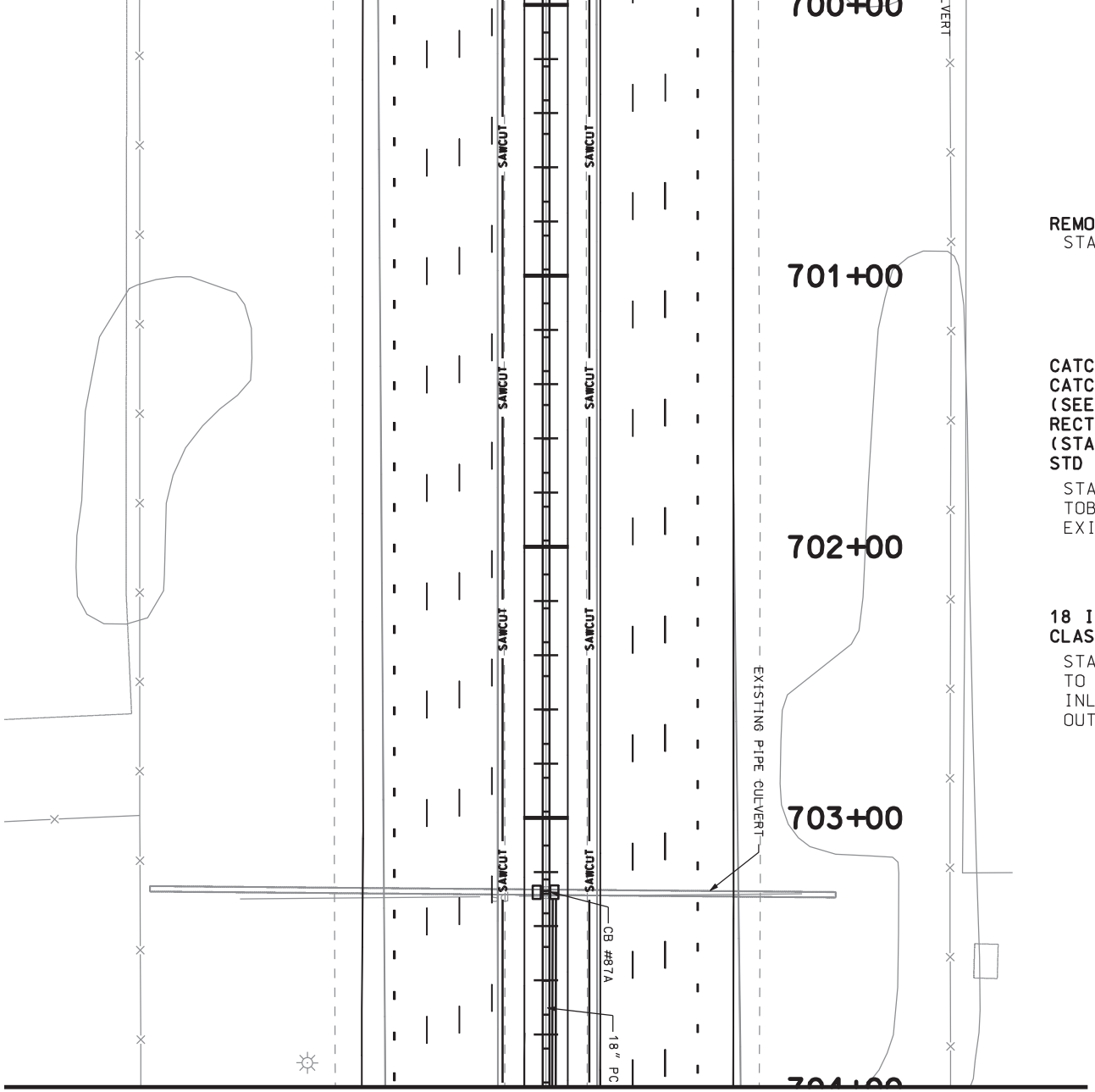


**REMOVE CATCH BASIN REQ'D**
STA 703+28, CL

**CATCH BASIN NO. 87A**
**CATCH BASIN, DETAIL DWG DT-7 RE**
**(SEE SHEET DT-7)**
**RECTANGULAR GRATE AND FRAME**
**(STANDARD GRATING)**
**STD DWG GF3 REQ'D (2).**
STA 703+28, CL
TOB EL=4562.20
EXIST EL=4559.94

**18 INCH PIPE CULVERT,**
**CLASS A REQ'D**
STA 703+28, CL
TO STA 704+49, CL
INLET ELEV = 4557.80
OUTLET ELEV = 4556.40

MATCH LINE STATION 704+00.000
SEE SHEET RD88

| | | | | | | |
|---|---|---|---|---|---|---|
| SHEET NO. RD-87 | UTAH COUNTY | I-15; CORRIDOR IN UTAH COUNTY | UTAH DEPARTMENT OF TRANSPORTATION<br>REGION THREE -- OREM CITY, UTAH<br>ROADWAY DESIGN | | | |
| | | PLAN SHEET | APPROVAL RECOMM. ____ DATE ____ PROJECT DESIGN ENGINEER | DESIGN JAH 02-05 | CHECK SMM 02-05 | REVIEW |
| | | PROJECT NUMBER SP-15-6(52)241 | APPROVED FOR USE BY UDOT ____ DATE ____ PRECONSTRUCTION ENGINEER | DRAWN JAH 02-05 | CHECK SMM 02-05 | DATE ____ |
| | | | | QUANT. JAH 02-05 | CHECK SMM 02-05 | BY ____ |

| NO. | DATE | DESIGN REV. BY | MAPS CORR. BY | PARCELS AFFECTED | REQUEST BY | REMARKS |
|---|---|---|---|---|---|---|
| | | ORIGINAL SUBMISSION FOR AUTHORIZATION | | | | |
| DATE | | REVISIONS | | | | |

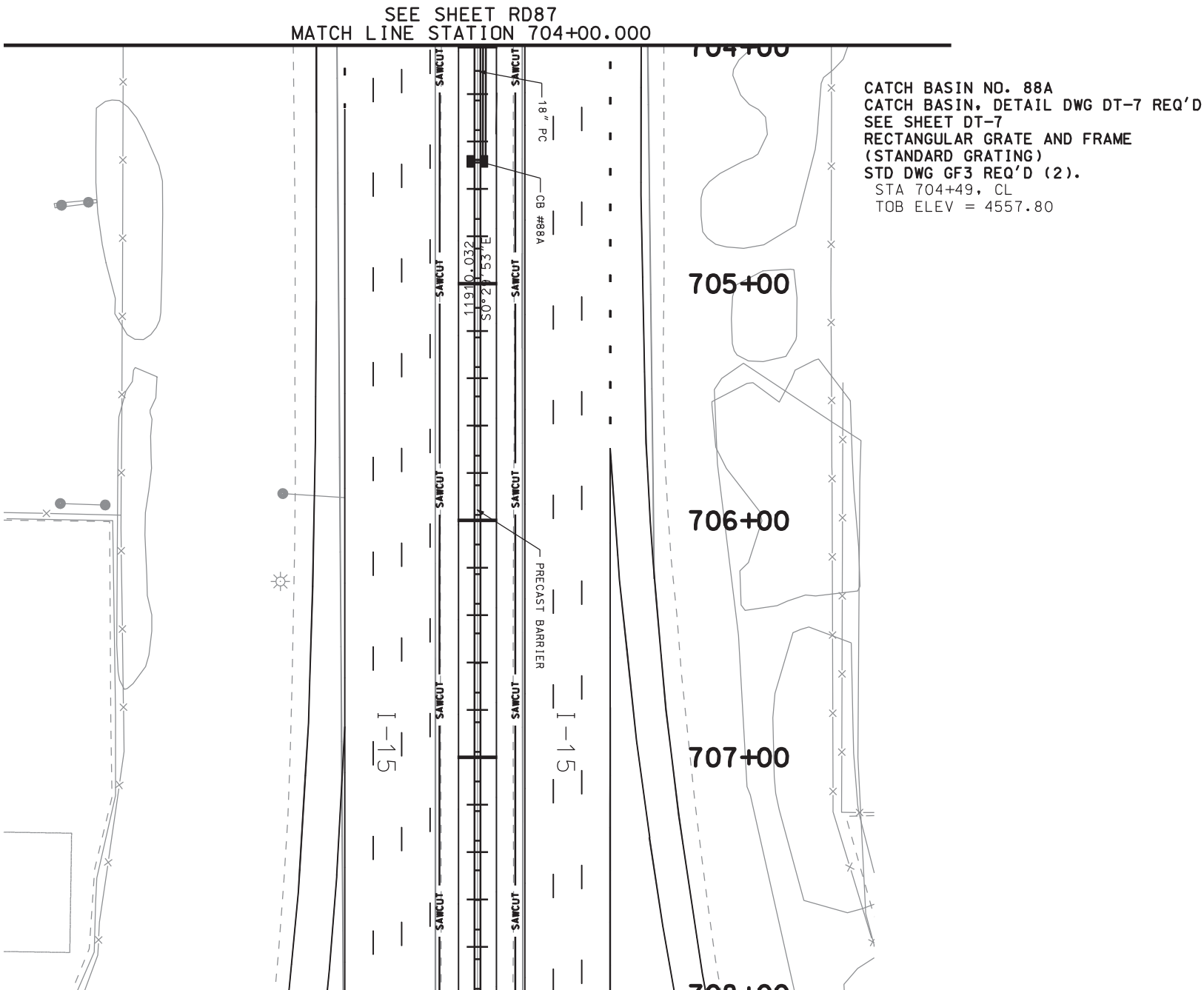
SEE SHEET RD87
MATCH LINE STATION 704+00.000
704+00
705+00
706+00
707+00
708+00
CATCH BASIN NO. 88A
CATCH BASIN, DETAIL DWG DT-7 REQ'D
SEE SHEET DT-7
RECTANGULAR GRATE AND FRAME
(STANDARD GRATING)
STD DWG GF3 REQ'D (2).
STA 704+49, CL
TOB ELEV = 4557.80
18" PC
CB #88A
PRECAST BARRIER
SAWCUT
I-15
I-15
11910.032
S0°21'53"E

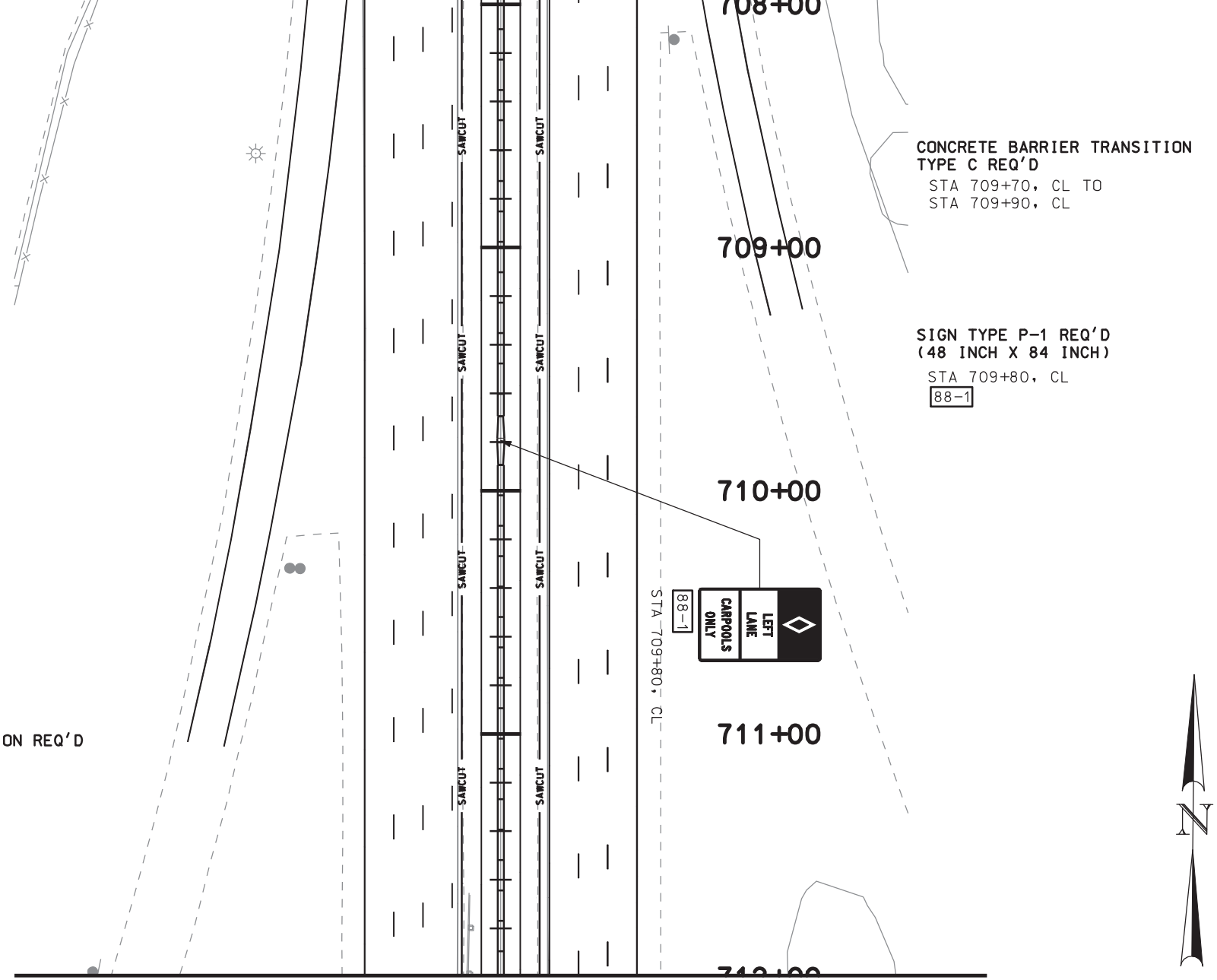


MATCH LINE STATION 712+00.000
SEE SHEET RD89

| | | | | | | |
|---|---|---|---|---|---|---|
| SHEET NO. RD-88 | UTAH COUNTY | I-15; CORRIDOR IN UTAH COUNTY | UTAH DEPARTMENT OF TRANSPORTATION<br>REGION THREE -- OREM CITY, UTAH<br>ROADWAY DESIGN | | | |
| | | PLAN SHEET | APPROVAL RECOMM. ____ DATE ____ PROJECT DESIGN ENGINEER | DESIGN JAH 02-05 | CHECK SMM 02-05 | REVIEW |
| | | PROJECT NUMBER SP-15-6(52)241 | APPROVED FOR USE BY UDOT ____ DATE ____ PRECONSTRUCTION ENGINEER | DRAWN JAH 02-05 | CHECK SMM 02-05 | DATE ____ |
| | | | | QUANT. JAH 02-05 | CHECK SMM 02-05 | BY ____ |

| NO. | DATE | DESIGN REV. BY | MAPS CORR. BY | PARCELS AFFECTED | REQUEST BY | REMARKS |
|---|---|---|---|---|---|---|
| | | ORIGINAL SUBMISSION FOR AUTHORIZATION | | | | |
| DATE | | REVISIONS | | | | |

SEE SHEET RD88
MATCH LINE STATION 712+00.000

2" ROTOMILL - 1 INCH REQ'D
2" HMA - 3/4 INCH REQ'D
1" OPEN GRADED SURFACE COURSE REQ'D

**18 INCH PIPE CULVERT, CLASS A REQ'D**
FROM STA 715+59, 3.5 LT
TO STA 714+10, 2.0 LT

**12 INCH PIPE CULVERT, CLASS A REQ'D**
FROM STA 715+59, 3.5 LT
TO STA 715+59, 3.5 RT

**STORM SUMP REQ'D (NO. SS-89A)**
**MANHOLE FRAME AND GRATED**
**COVER STD GF1 REQ'D**
**(SEE SHEET DT-6)**
STA 714+10, 2.0 RT
TOB ELEV = 4564.85

**REMOVE GUARDRAIL REQ'D**
STA 711+92, RT TO
STA 715+67, RT

**CATCH BASIN NO. 89B**
**CATCH BASIN, STD DWG CB-10 REQ'D**
**(STD DWG CB-10)**
**RECTANGULAR GRATE AND FRAME**
**(STANDARD GRATING)**
**STD DWG GF3 REQ'D.**
STA 715+59, 3.5 LT
COL A, LINE 1
TOB ELEV = 4561.71

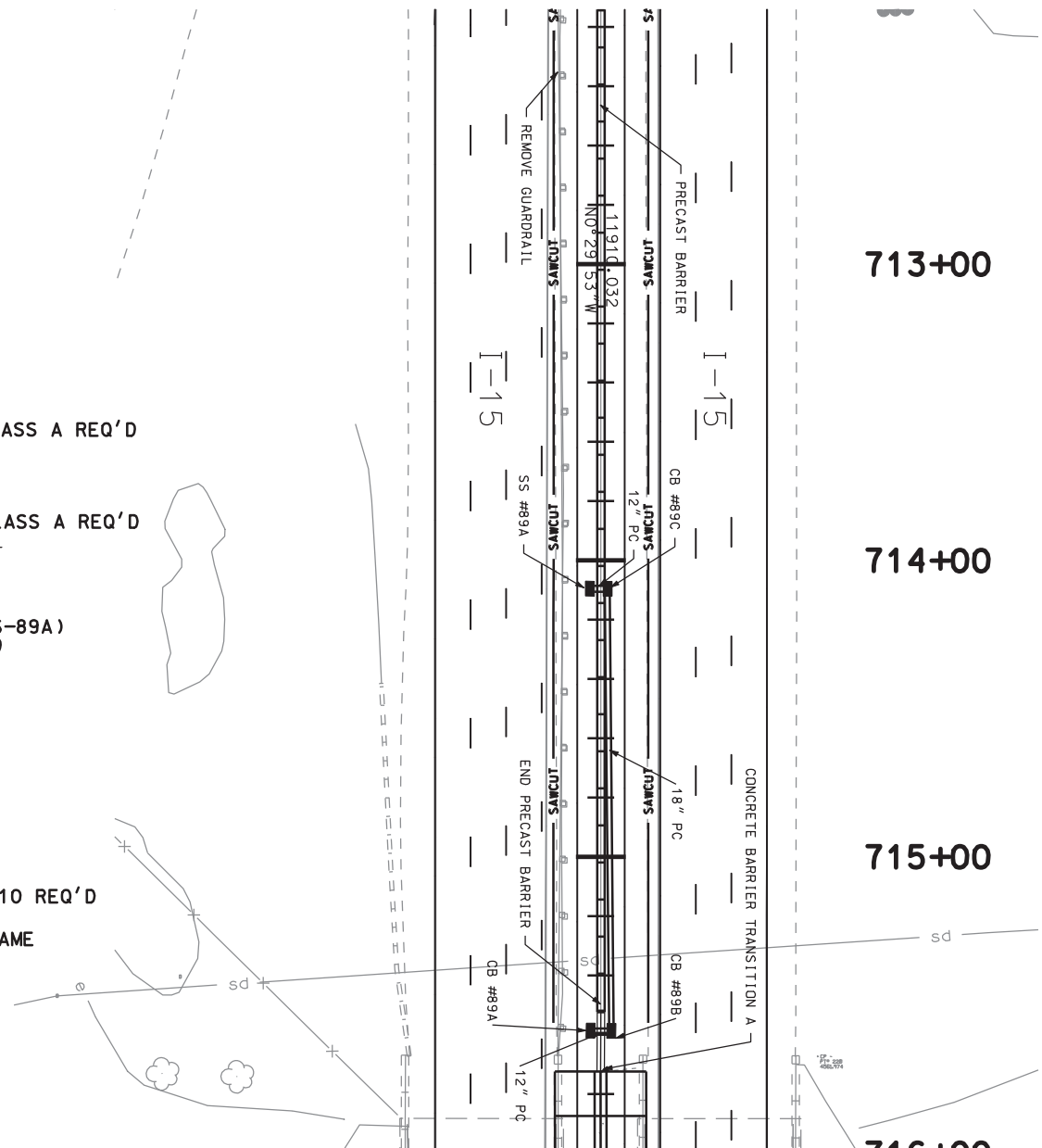


**CATCH BASIN NO. 89C**
**CATCH BASIN, STD DWG CB-10 REQ'D**
**(SEE SHEET DT-6)**
**RECTANGULAR GRATE AND FRAME**
**(STANDARD GRATING) STD DWG GF3 REQ'D.**
STA 714+10, 2.0 LT
TOB ELEV = 4564.85

**12 INCH PIPE CULVERT, CLASS A REQ'D.**
STA 714+10, 2.0 LT TO
STA 714+10, 2.0 RT

**CATCH BASIN NO. 89A**
**CATCH BASIN, STD DWG CB-10 REQ'D**
**(STD DWG CB-10)**
**RECTANGULAR GRATE AND FRAME**
**(STANDARD GRATING) STD DWG GF3 REQ'D.**
STA 715+59, 3.5 RT
COL A, LINE 1
TOB ELEV = 4564.6

**CONCRETE BARRIER TRANSITION**
**TYPE A REQ'D**
STA 715+53, CL TO
STA 715+73, CL
STA 717+46, CL TO
STA 717+66, CL

**PRECAST CONCRETE FULL BARRIER**
**(NEW JERSEY SHAPE) REQ'D**
STA 717+66, CL TO
STA 742+15, CL

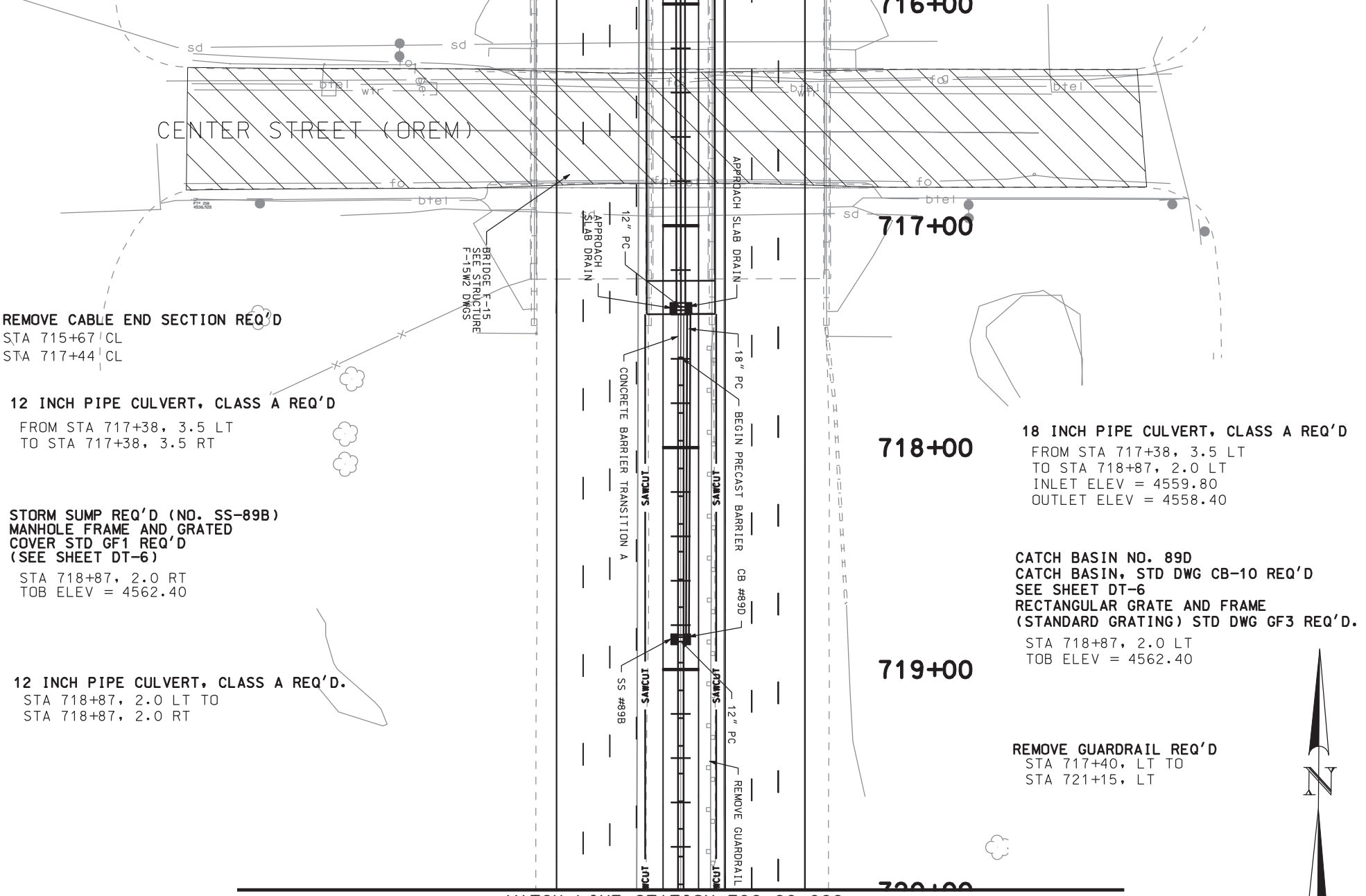


MATCH LINE STATION 720+00.000
SEE SHEET RD90

| | | | | | | |
|---|---|---|---|---|---|---|
| SHEET NO. RD-89 | UTAH COUNTY | I-15; CORRIDOR IN UTAH COUNTY | UTAH DEPARTMENT OF TRANSPORTATION<br>REGION THREE -- OREM CITY, UTAH<br>ROADWAY DESIGN | | | |
| | | PLAN SHEET | APPROVAL RECOMM. DATE / PROJECT DESIGN ENGINEER | DESIGN JAH 02-05 | CHECK SMM 02-05 | REVIEW |
| | | PROJECT NUMBER SP-15-6(52)241 | APPROVED FOR USE BY UDOT DATE / PRECONSTRUCTION ENGINEER | DRAWN JAH 02-05 | CHECK SMM 02-05 | DATE |
| | | | | QUANT. JAH 02-05 | CHECK SMM 02-05 | BY |

| NO. | DATE | DESIGN REV. BY | MAPS CORR. BY | PARCELS AFFECTED | REQUEST BY | REMARKS |
|---|---|---|---|---|---|---|
| | | ORIGINAL SUBMISSION FOR AUTHORIZATION | | | | |

DATE REVISIONS

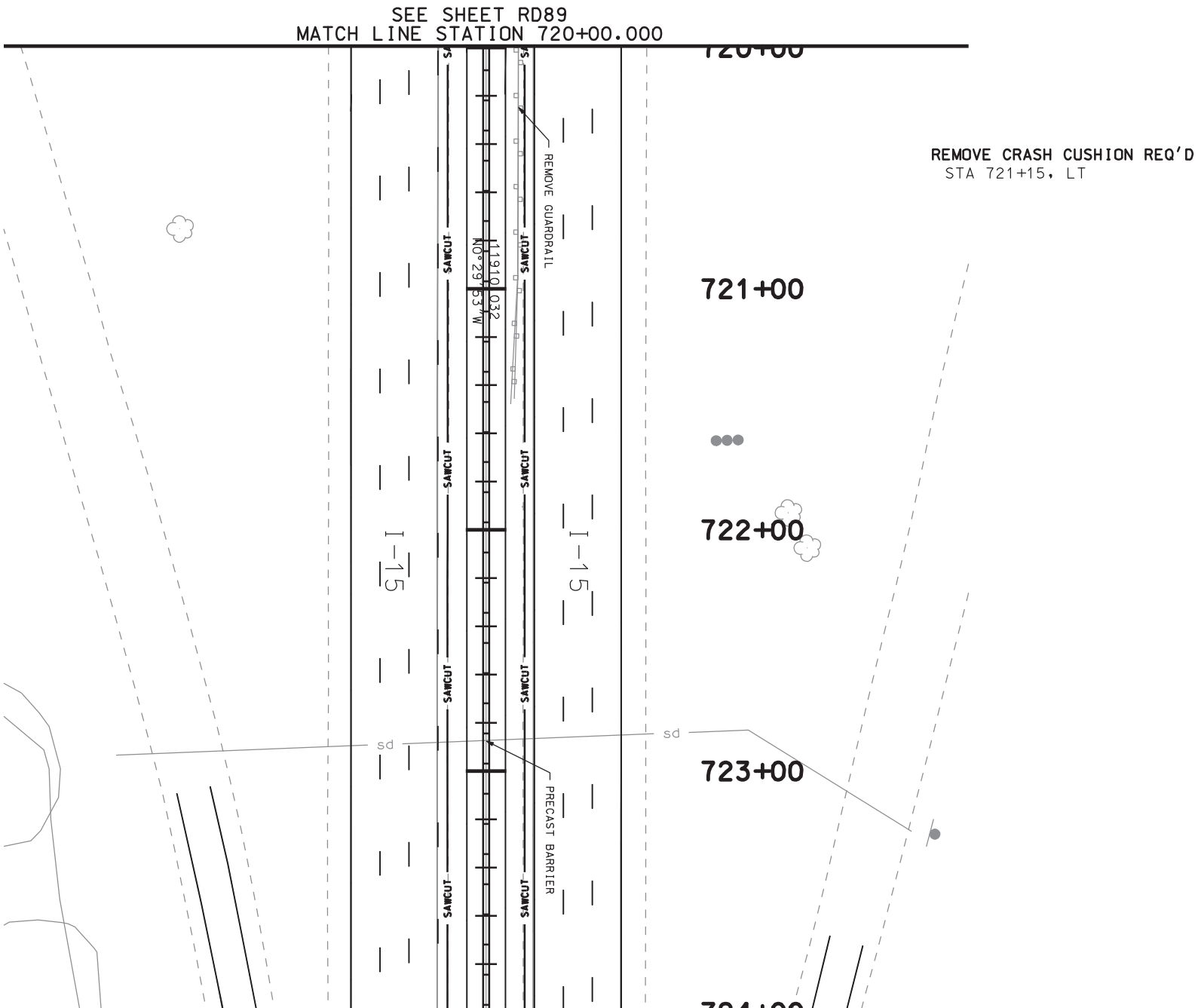
SEE SHEET RD89
MATCH LINE STATION 720+00.000
720+00
721+00
722+00
723+00
724+00
REMOVE CRASH CUSHION REQ'D
STA 721+15, LT
REMOVE GUARDRAIL
PRECAST BARRIER
SAWCUT
I-15
sd
N0°29'53"W
11910.032

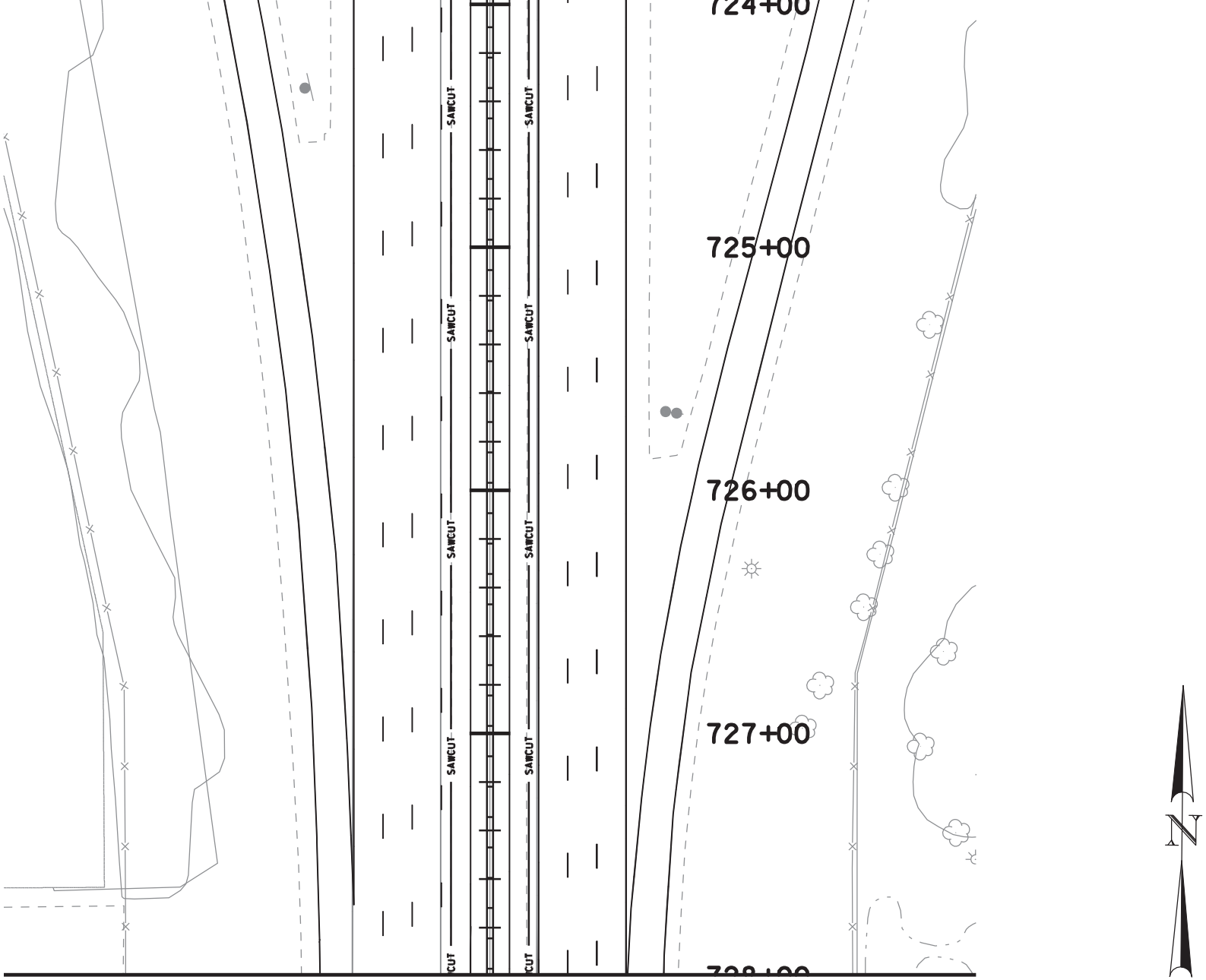


MATCH LINE STATION 728+00.000
SEE SHEET RD91

| | | | | | | |
|---|---|---|---|---|---|---|
| I-15; CORRIDOR | UTAH DEPARTMENT OF TRANSPORTATION | | | | | |
| IN UTAH COUNTY | REGION THREE -- OREM CITY, UTAH | | | | | |
| PLAN SHEET | ROADWAY DESIGN | | | | | |
| | APPROVAL RECOMM. ____ DATE ____ PROJECT DESIGN ENGINEER | DESIGN JAH 02-05 | CHECK SMM 02-05 | REVIEW | | |
| PROJECT NUMBER SP-15-6(52)241 | APPROVED FOR USE BY UDOT ____ DATE ____ PRECONSTRUCTION ENGINEER | DRAWN JAH 02-05 | CHECK SMM 02-05 | DATE ____ | | |
| | | QUANT. JAH 02-05 | CHECK SMM 02-05 | BY ____ | | |

| NO. | DATE | DESIGN REV.BY | MAPS CORR.BY | PARCELS AFFECTED | REQUEST BY | REMARKS |
|---|---|---|---|---|---|---|
| | | ORIGINAL SUBMISSION FOR AUTHORIZATION | | | | |
| DATE | | REVISIONS | | | | |

SHEET NO. RD-90

UTAH COUNTY

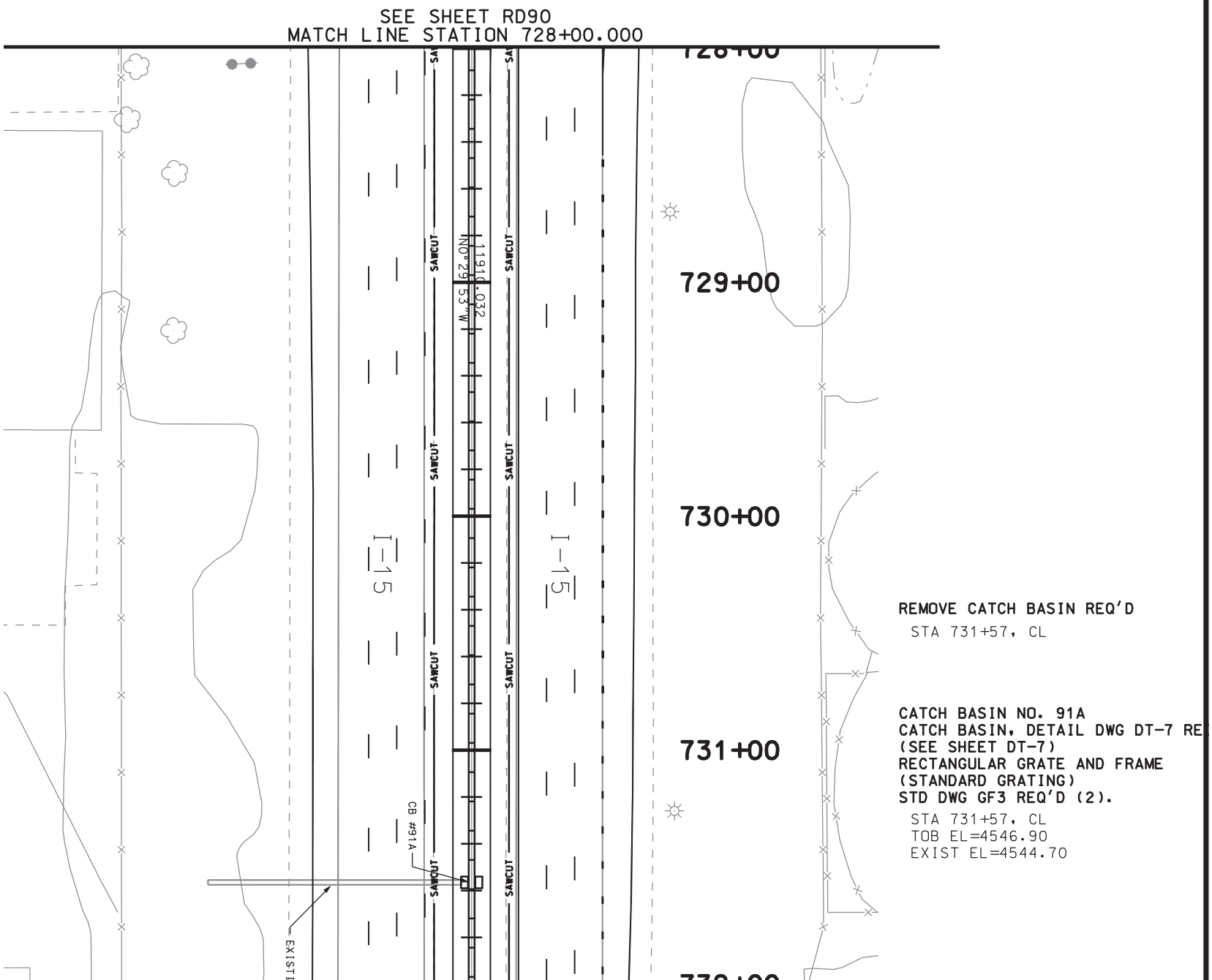
SEE SHEET RD90
MATCH LINE STATION 728+00.000
728+00
729+00
730+00
731+00
732+00
I-15
I-15
SAWCUT
SAWCUT
SAWCUT
SAWCUT
SAWCUT
SAWCUT
SAWCUT
SAWCUT
N0°29'53"W
1191.032
CB #91A
EXIST
REMOVE CATCH BASIN REQ'D
STA 731+57, CL
CATCH BASIN NO. 91A
CATCH BASIN, DETAIL DWG DT-7 RE
(SEE SHEET DT-7)
RECTANGULAR GRATE AND FRAME
(STANDARD GRATING)
STD DWG GF3 REQ'D (2).
STA 731+57, CL
TOB EL=4546.90
EXIST EL=4544.70

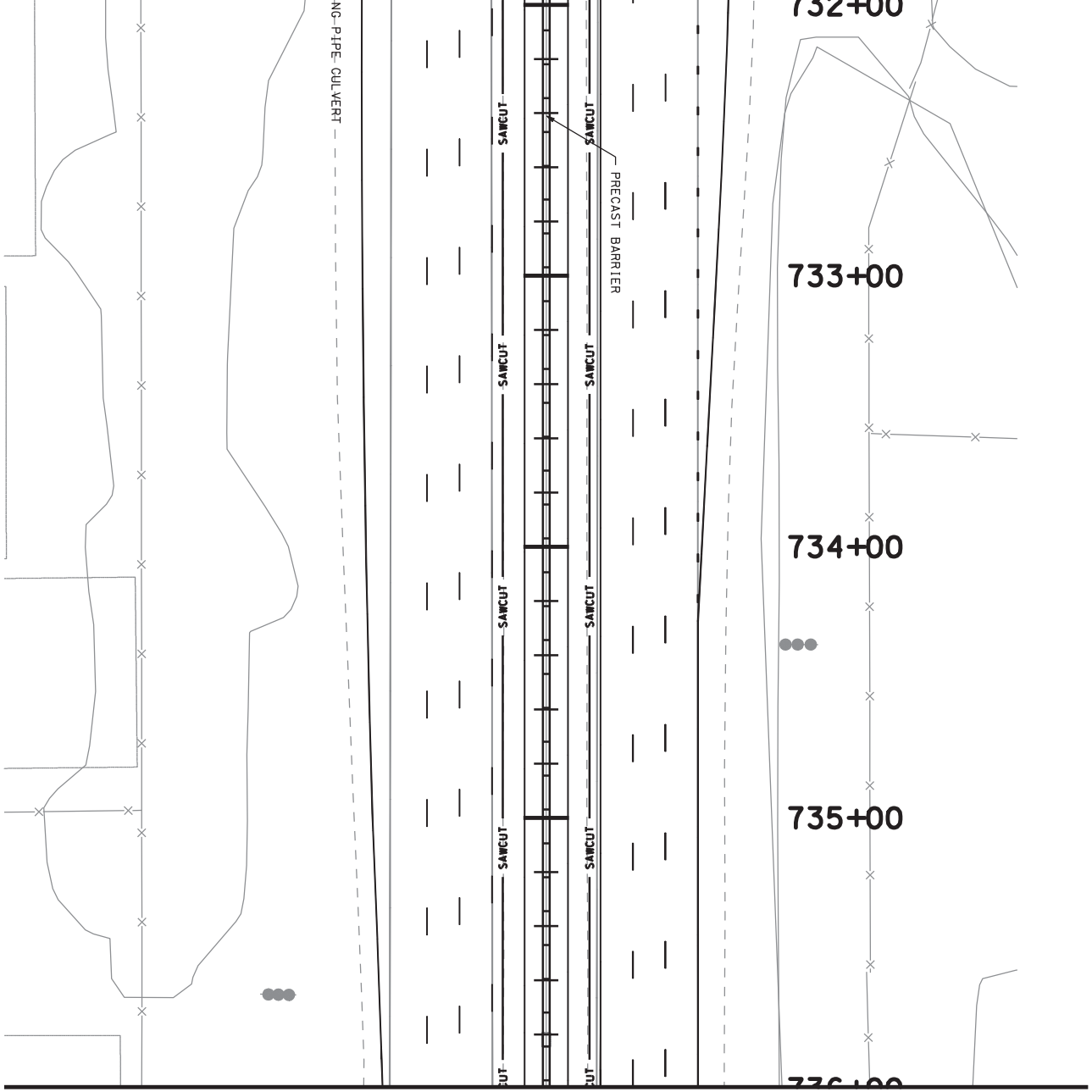


MATCH LINE STATION 736+00.000
SEE SHEET RD92

| | | | | | | |
|---|---|---|---|---|---|---|
| SHEET NO. RD-91 | UTAH COUNTY | I-15; CORRIDOR IN UTAH COUNTY | UTAH DEPARTMENT OF TRANSPORTATION<br>REGION THREE -- OREM CITY, UTAH<br>ROADWAY DESIGN | | | |
| | | PLAN SHEET | APPROVAL RECOMM. ____ DATE ____ PROJECT DESIGN ENGINEER | DESIGN JAH 02-05 | CHECK SMM 02-05 | REVIEW |
| | | PROJECT NUMBER SP-15-6(52)241 | APPROVED FOR USE BY UDOT ____ DATE ____ PRECONSTRUCTION ENGINEER | DRAWN JAH 02-05 | CHECK SMM 02-05 | DATE ____ |
| | | | | QUANT. JAH 02-05 | CHECK SMM 02-05 | BY ____ |

| NO. | DATE | DESIGN REV. BY | MAPS CORR. BY | PARCELS AFFECTED | REQUEST BY | REMARKS |
|---|---|---|---|---|---|---|
| | | ORIGINAL SUBMISSION FOR AUTHORIZATION | | | | |
| DATE | | REVISIONS | | | | |

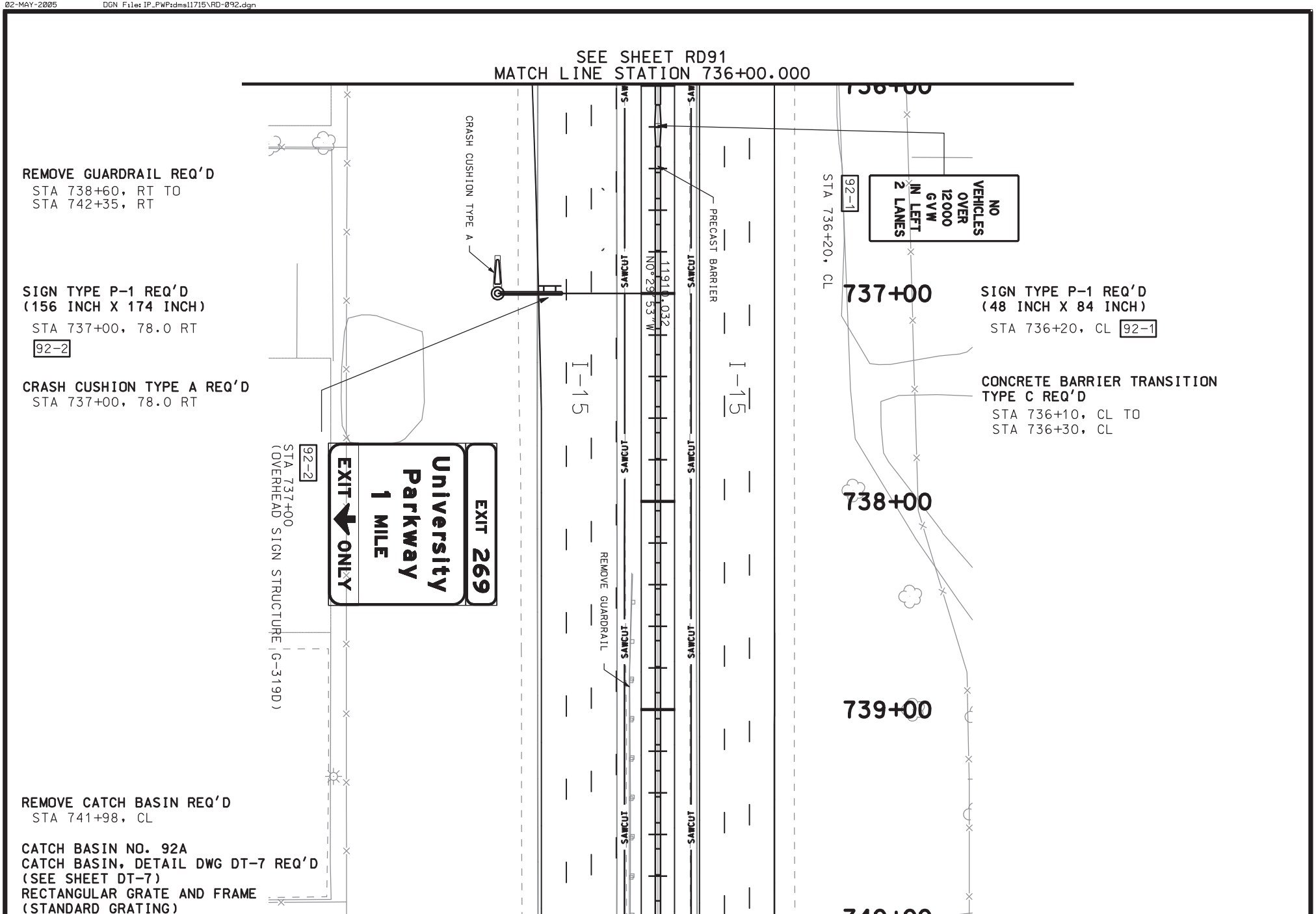
SEE SHEET RD91
MATCH LINE STATION 736+00.000
REMOVE GUARDRAIL REQ'D
STA 738+60, RT TO
STA 742+35, RT
SIGN TYPE P-1 REQ'D
(156 INCH X 174 INCH)
STA 737+00, 78.0 RT
92-2
CRASH CUSHION TYPE A REQ'D
STA 737+00, 78.0 RT
REMOVE CATCH BASIN REQ'D
STA 741+98, CL
CATCH BASIN NO. 92A
CATCH BASIN, DETAIL DWG DT-7 REQ'D
(SEE SHEET DT-7)
RECTANGULAR GRATE AND FRAME
(STANDARD GRATING)
CRASH CUSHION TYPE A
PRECAST BARRIER
11910.032
N0°29'53"W
I-15
SAWCUT
REMOVE GUARDRAIL
EXIT 269
University Parkway
1 MILE
EXIT ONLY
92-2
STA 737+00
(OVERHEAD SIGN STRUCTURE G-319D)
NO VEHICLES OVER 12000 GVW IN LEFT 2 LANES
92-1
STA 736+20, CL
737+00
738+00
739+00
SIGN TYPE P-1 REQ'D
(48 INCH X 84 INCH)
STA 736+20, CL 92-1
CONCRETE BARRIER TRANSITION
TYPE C REQ'D
STA 736+10, CL TO
STA 736+30, CL

**STD DWG GF3 REQ'D (2).**
STA 741+98, CL
TOB EL=4541.40
FL EL= 4539.90

**REMOVE CABLE END SECTION REQ'D**
STA 742+00 CL
STA 744+00 CL

**12 INCH PIPE CULVERT, CLASS A REQ'D**
FROM STA 743+75, 3.5 RT
TO STA 743+75, 3.5 LT

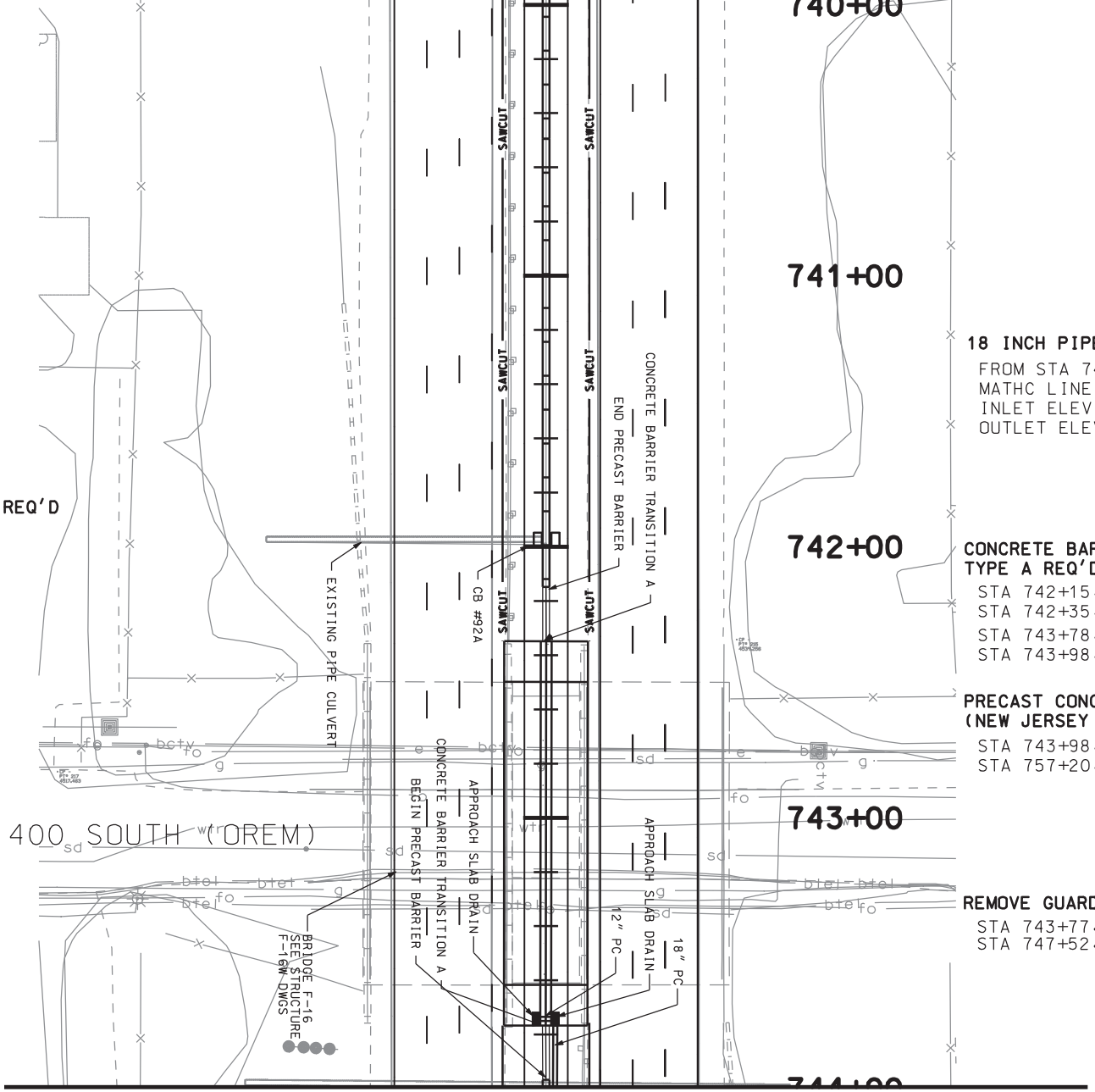


**18 INCH PIPE CULVERT, CLASS A REQ'D**
FROM STA 743+75, 3.5 LT TO
MATHC LINE STA 744+00, CL
INLET ELEV = 4535.30
OUTLET ELEV = 4533.30

**CONCRETE BARRIER TRANSITION TYPE A REQ'D**
STA 742+15, CL TO
STA 742+35, CL
STA 743+78, CL TO
STA 743+98, CL

**PRECAST CONCRETE FULL BARRIER (NEW JERSEY SHAPE) REQ'D**
STA 743+98, CL TO
STA 757+20, CL

**REMOVE GUARDRAIL REQ'D**
STA 743+77, LT TO
STA 747+52, LT

MATCH LINE STATION 744+00.000
SEE SHEET RD93

N

| | | | | | | |
|---|---|---|---|---|---|---|
| SHEET NO. RD-92 | UTAH COUNTY | I-15; CORRIDOR IN UTAH COUNTY | UTAH DEPARTMENT OF TRANSPORTATION | | | |
| | | PLAN SHEET | REGION THREE -- OREM CITY, UTAH | | | |
| | | | ROADWAY DESIGN | | | |
| | | PROJECT NUMBER SP-15-6(52)241 | APPROVAL RECOMM. DATE / PROJECT DESIGN ENGINEER | DESIGN JAH 02-05 | CHECK SMM 02-05 | REVIEW |
| | | | APPROVED FOR USE BY UDOT DATE / PRECONSTRUCTION ENGINEER | DRAWN JAH 02-05 | CHECK SMM 02-05 | DATE |
| | | | | QUANT. JAH 02-05 | CHECK SMM 02-05 | BY |

| NO. | DATE | DESIGN REV.BY | MAPS CORR.BY | PARCELS AFFECTED | REQUEST BY | REMARKS |
|---|---|---|---|---|---|---|
| | | ORIGINAL SUBMISSION FOR AUTHORIZATION | | | | |
| DATE | | REVISIONS | | | | |

SEE SHEET RD92
MATCH LINE STATION 744+00.000

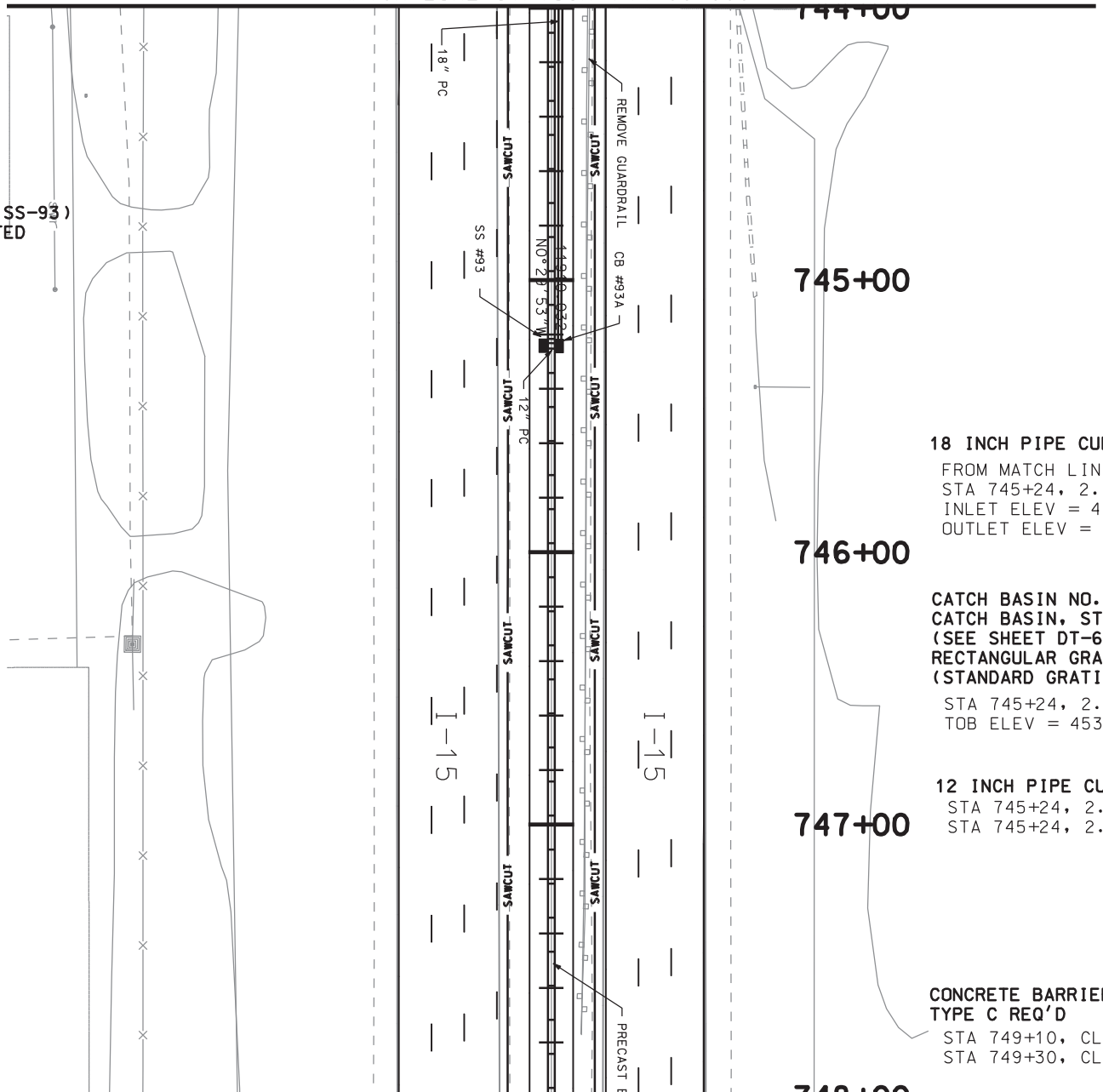


STORM SUMP REQ'D (NO. SS-93)
MANHOLE FRAME AND GRATED
COVER STD GF1 REQ'D
(SEE SHEET DT-6)
STA 745+24, 2.0 RT
TOB ELEV = 4537.30

18 INCH PIPE CULVERT, CLASS A REQ'D
FROM MATCH LINE STA 744+00, 3.5 LT TO
STA 745+24, 2.0 LT
INLET ELEV = 4535.30
OUTLET ELEV = 4533.30

CATCH BASIN NO. 93A
CATCH BASIN, STD DWG CB-10 REQ'D
(SEE SHEET DT-6)
RECTANGULAR GRATE AND FRAME
(STANDARD GRATING) STD DWG GF3 REQ'D.
STA 745+24, 2.0 LT
TOB ELEV = 4537.30

12 INCH PIPE CULVERT, CLASS A REQ'D.
STA 745+24, 2.0 LT TO
STA 745+24, 2.0 RT

CONCRETE BARRIER TRANSITION
TYPE C REQ'D
STA 749+10, CL TO
STA 749+30, CL

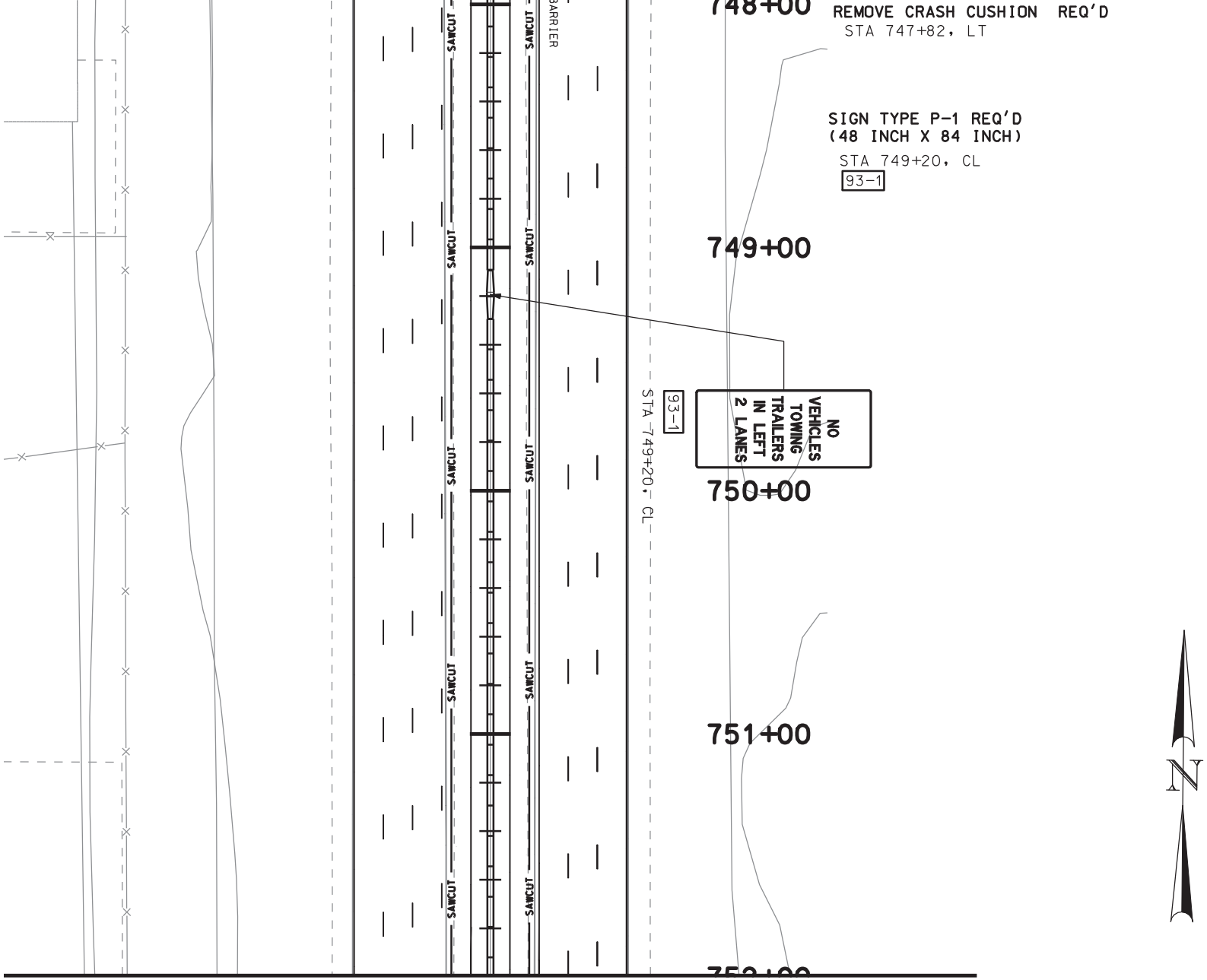


MATCH LINE STATION 752+00.000
SEE SHEET RD94

| | | | | | | |
|---|---|---|---|---|---|---|
| I-15; CORRIDOR | UTAH DEPARTMENT OF TRANSPORTATION | | | | | |
| IN UTAH COUNTY | REGION THREE -- OREM CITY, UTAH | | | | | |
| PLAN SHEET | ROADWAY DESIGN | | | | | |
| | APPROVAL RECOMM. ____ DATE ____ PROJECT DESIGN ENGINEER | DESIGN JAH 02-05 | CHECK SMM 02-05 | REVIEW | | |
| PROJECT NUMBER SP-15-6(52)241 | APPROVED FOR USE BY UDOT ____ DATE ____ PRECONSTRUCTION ENGINEER | DRAWN JAH 02-05 | CHECK SMM 02-05 | DATE ____ | | |
| | | QUANT. JAH 02-05 | CHECK SMM 02-05 | BY ____ | | |

| NO. | DATE | DESIGN REV. BY | MAPS CORR. BY | PARCELS AFFECTED | REQUEST BY | REMARKS |
|---|---|---|---|---|---|---|
| | | ORIGINAL SUBMISSION FOR AUTHORIZATION | | | | |
| DATE | | REVISIONS | | | | |

UTAH COUNTY

SHEET NO. RD-93

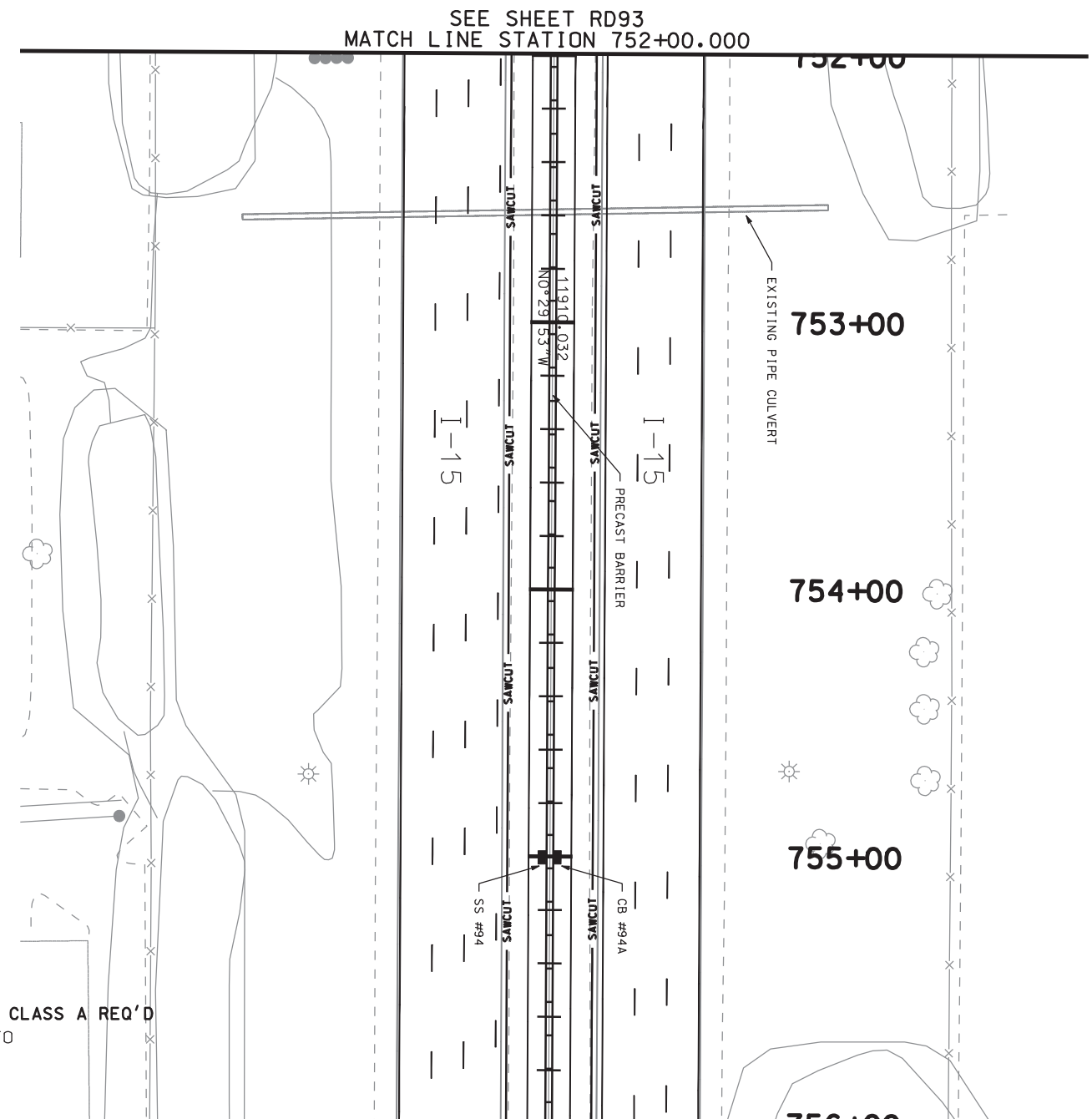


**12 INCH PIPE CULVERT, CLASS A REQ'D**
STA 755+00, 2.0 RT TO
STA 755+00, 2.0 LT

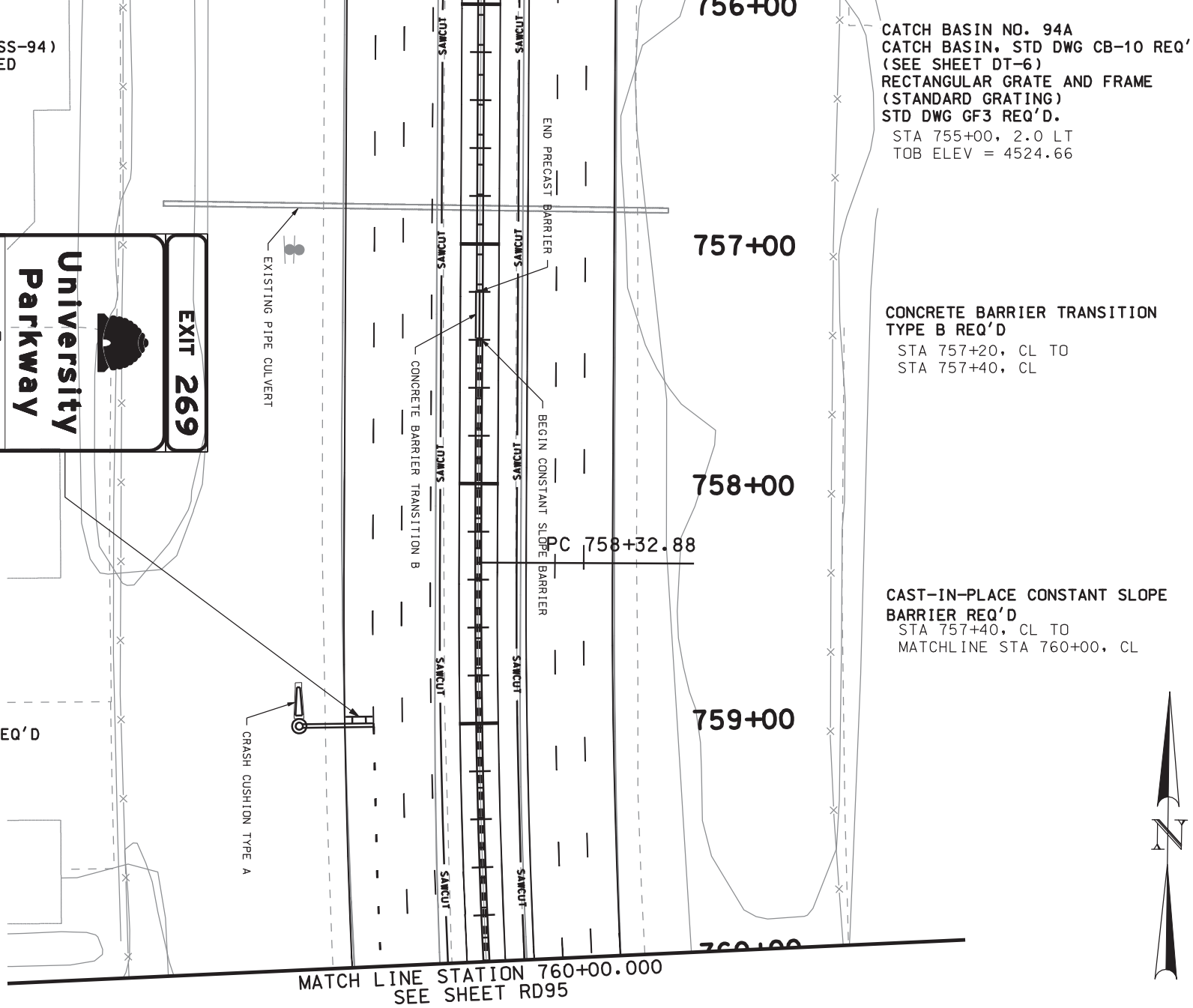


| | | | | | | |
|---|---|---|---|---|---|---|
| I-15; CORRIDOR | UTAH DEPARTMENT OF TRANSPORTATION | | | | | |
| IN UTAH COUNTY | REGION THREE -- OREM CITY, UTAH | | | | | |
| PLAN SHEET | ROADWAY DESIGN | | | | | |
| | APPROVAL RECOMM. DATE / PROJECT DESIGN ENGINEER | DESIGN JAH 02-05 | CHECK SMM 02-05 | REVIEW | | |
| | APPROVED FOR USE BY UDOT DATE / PRECONSTRUCTION ENGINEER | DRAWN JAH 02-05 | CHECK SMM 02-05 | DATE | | |
| PROJECT NUMBER SP-15-6(52)241 | | QUANT. JAH 02-05 | CHECK SMM 02-05 | BY | | |

| NO. | DATE | DESIGN REV. BY | MAPS CORR. BY | PARCELS AFFECTED | REQUEST BY | REMARKS |
|---|---|---|---|---|---|---|
| | | ORIGINAL SUBMISSION FOR AUTHORIZATION | | | | |
| DATE | | REVISIONS | | | | |

UTAH COUNTY

SHEET NO. RD-94

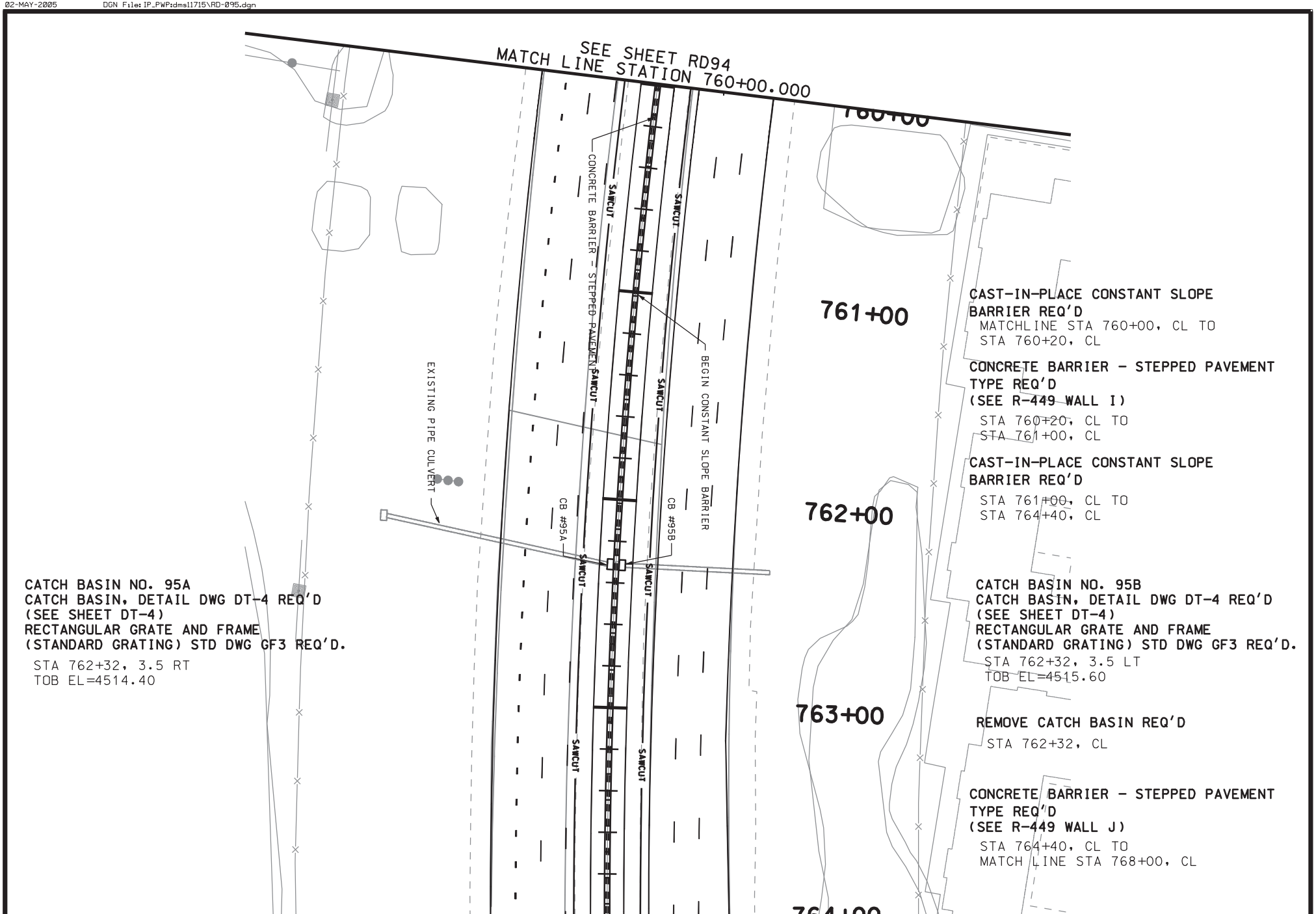
SEE SHEET RD94
MATCH LINE STATION 760+00.000
760+00
761+00
762+00
763+00
764+00
CONCRETE BARRIER - STEPPED PAVEMENT
BEGIN CONSTANT SLOPE BARRIER
SAWCUT
EXISTING PIPE CULVERT
CB #95A
CB #95B
CAST-IN-PLACE CONSTANT SLOPE BARRIER REQ'D
MATCHLINE STA 760+00, CL TO STA 760+20, CL
CONCRETE BARRIER - STEPPED PAVEMENT TYPE REQ'D (SEE R-449 WALL I)
STA 760+20, CL TO STA 761+00, CL
CAST-IN-PLACE CONSTANT SLOPE BARRIER REQ'D
STA 761+00, CL TO STA 764+40, CL
CATCH BASIN NO. 95A
CATCH BASIN, DETAIL DWG DT-4 REQ'D (SEE SHEET DT-4)
RECTANGULAR GRATE AND FRAME (STANDARD GRATING) STD DWG GF3 REQ'D.
STA 762+32, 3.5 RT
TOB EL=4514.40
CATCH BASIN NO. 95B
CATCH BASIN, DETAIL DWG DT-4 REQ'D (SEE SHEET DT-4)
RECTANGULAR GRATE AND FRAME (STANDARD GRATING) STD DWG GF3 REQ'D.
STA 762+32, 3.5 LT
TOB EL=4515.60
REMOVE CATCH BASIN REQ'D
STA 762+32, CL
CONCRETE BARRIER - STEPPED PAVEMENT TYPE REQ'D (SEE R-449 WALL J)
STA 764+40, CL TO MATCH LINE STA 768+00, CL

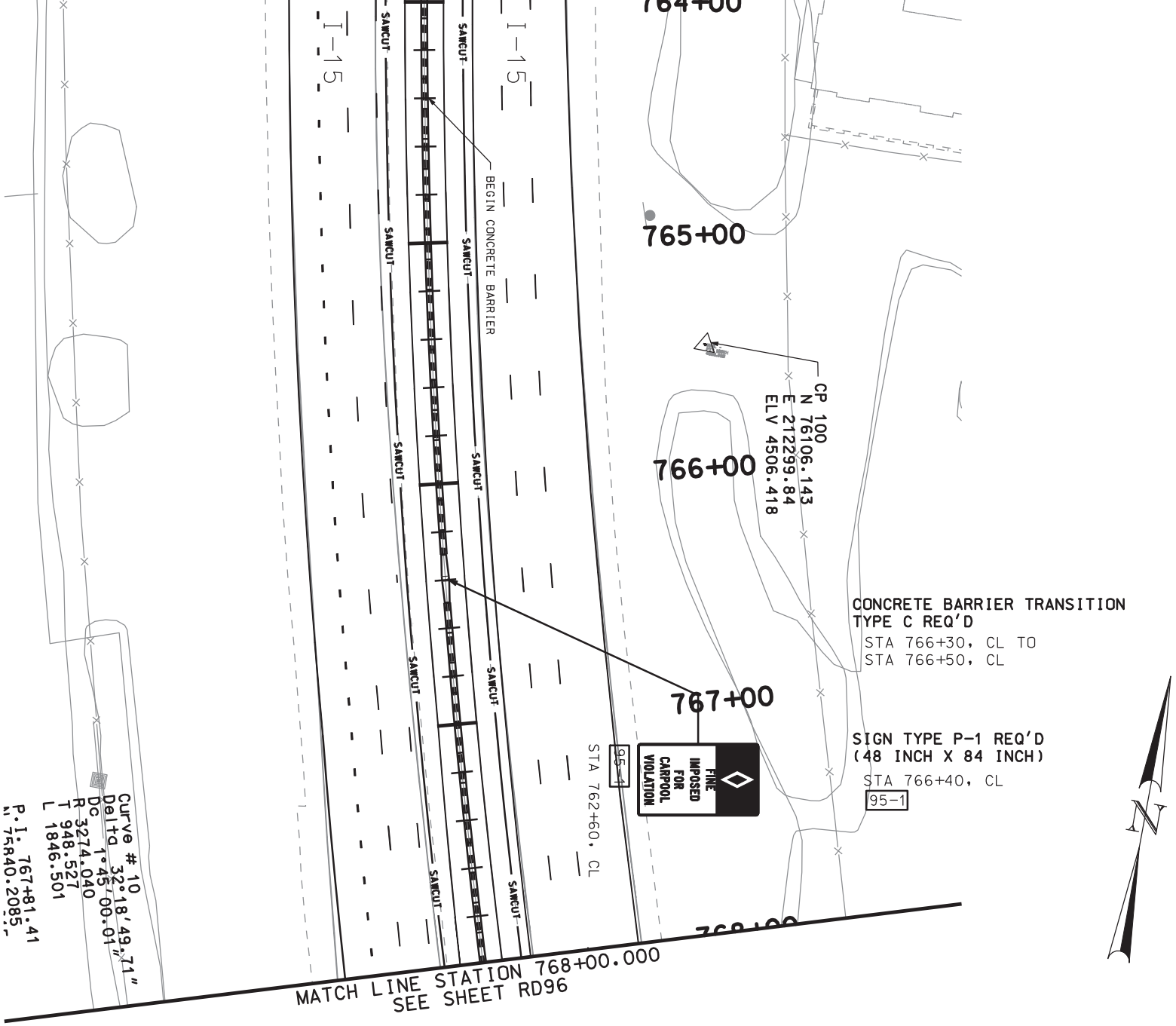


| | | | | | |
|---|---|---|---|---|---|
| I-15; CORRIDOR | UTAH DEPARTMENT OF TRANSPORTATION | | | | |
| IN UTAH COUNTY | REGION THREE -- OREM CITY, UTAH | | | | |
| PLAN SHEET | ROADWAY DESIGN | | | | |
| PROJECT NUMBER SP-15-6(52)241 | APPROVAL RECOMM. DATE PROJECT DESIGN ENGINEER | DESIGN JAH 02-05 | CHECK SMM 02-05 | REVIEW | |
| | APPROVED FOR USE BY UDOT DATE PRECONSTRUCTION ENGINEER | DRAWN JAH 02-05 | CHECK SMM 02-05 | DATE | |
| | | QUANT. JAH 02-05 | CHECK SMM 02-05 | BY | |

| NO. | DATE | DESIGN REV.BY | MAPS CORR.BY | PARCELS AFFECTED | REQUEST BY | REMARKS |
|---|---|---|---|---|---|---|
| | | ORIGINAL SUBMISSION FOR AUTHORIZATION | | | | |
| DATE | | REVISIONS | | | | |

UTAH COUNTY

SHEET NO. RD-95

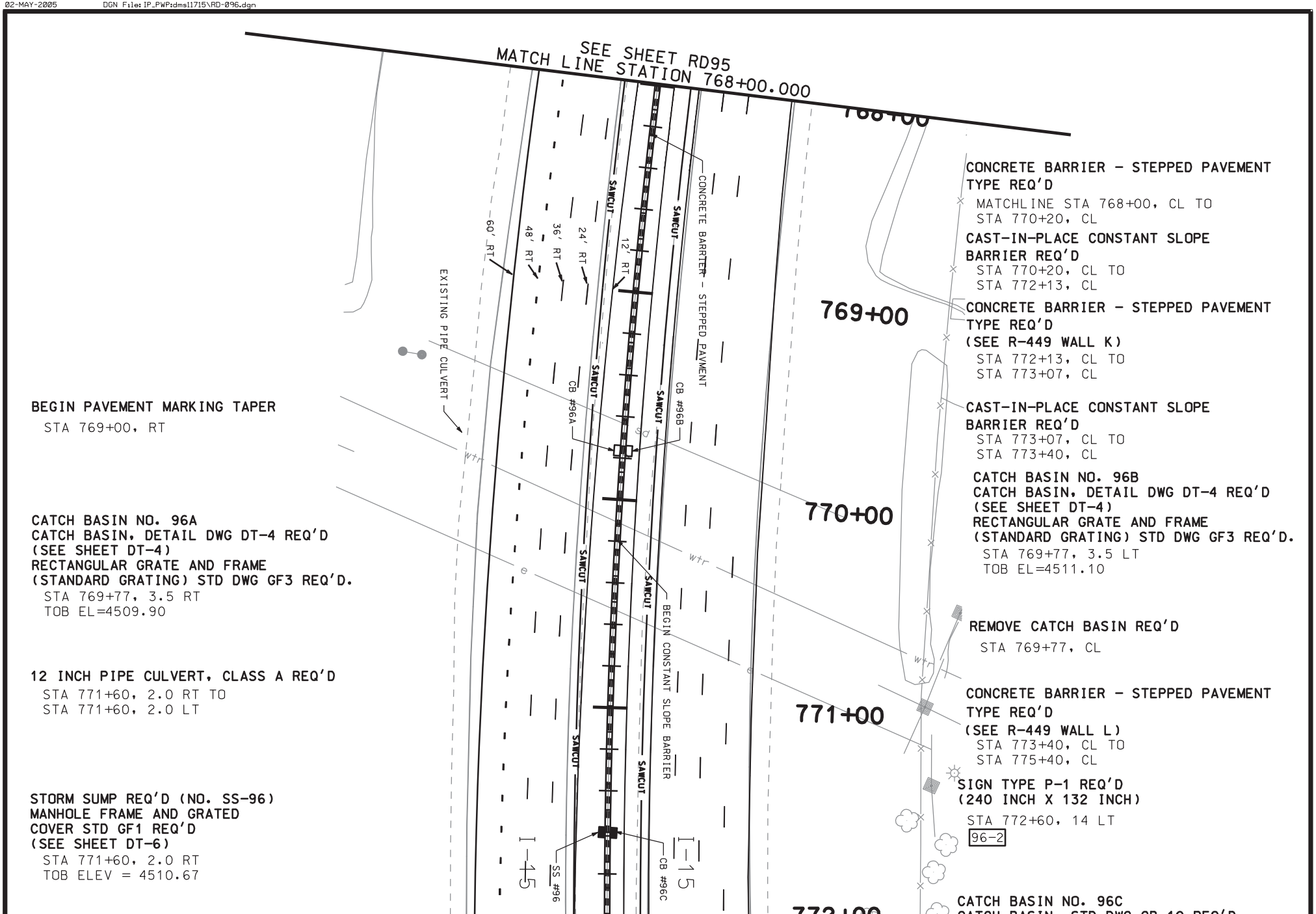
SEE SHEET RD95
MATCH LINE STATION 768+00.000
768+00
769+00
770+00
771+00
772+00
CONCRETE BARRIER - STEPPED PAVEMENT
SAWCUT
60' RT
48' RT
36' RT
24' RT
12' RT
EXISTING PIPE CULVERT
CB #96A
CB #96B
CB #96C
SS #96
BEGIN CONSTANT SLOPE BARRIER
I-15
wtr
sd
e
CONCRETE BARRIER - STEPPED PAVEMENT TYPE REQ'D
MATCHLINE STA 768+00, CL TO
STA 770+20, CL
CAST-IN-PLACE CONSTANT SLOPE BARRIER REQ'D
STA 770+20, CL TO
STA 772+13, CL
CONCRETE BARRIER - STEPPED PAVEMENT TYPE REQ'D
(SEE R-449 WALL K)
STA 772+13, CL TO
STA 773+07, CL
CAST-IN-PLACE CONSTANT SLOPE BARRIER REQ'D
STA 773+07, CL TO
STA 773+40, CL
CATCH BASIN NO. 96B
CATCH BASIN, DETAIL DWG DT-4 REQ'D
(SEE SHEET DT-4)
RECTANGULAR GRATE AND FRAME
(STANDARD GRATING) STD DWG GF3 REQ'D.
STA 769+77, 3.5 LT
TOB EL=4511.10
REMOVE CATCH BASIN REQ'D
STA 769+77, CL
CONCRETE BARRIER - STEPPED PAVEMENT TYPE REQ'D
(SEE R-449 WALL L)
STA 773+40, CL TO
STA 775+40, CL
SIGN TYPE P-1 REQ'D
(240 INCH X 132 INCH)
STA 772+60, 14 LT
96-2
CATCH BASIN NO. 96C
BEGIN PAVEMENT MARKING TAPER
STA 769+00, RT
CATCH BASIN NO. 96A
CATCH BASIN, DETAIL DWG DT-4 REQ'D
(SEE SHEET DT-4)
RECTANGULAR GRATE AND FRAME
(STANDARD GRATING) STD DWG GF3 REQ'D.
STA 769+77, 3.5 RT
TOB EL=4509.90
12 INCH PIPE CULVERT, CLASS A REQ'D
STA 771+60, 2.0 RT TO
STA 771+60, 2.0 LT
STORM SUMP REQ'D (NO. SS-96)
MANHOLE FRAME AND GRATED
COVER STD GF1 REQ'D
(SEE SHEET DT-6)
STA 771+60, 2.0 RT
TOB ELEV = 4510.67

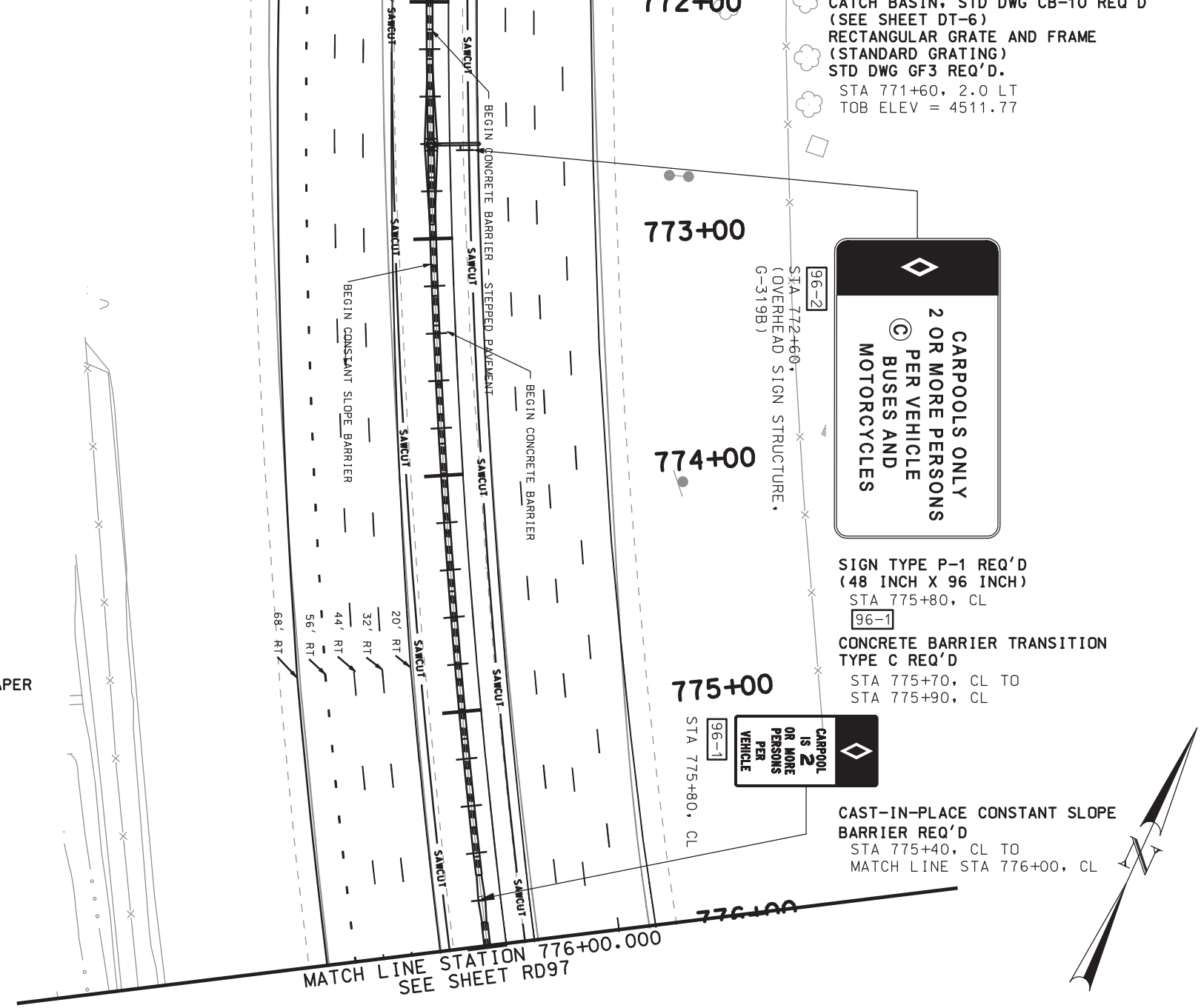


| | | | | | | |
|---|---|---|---|---|---|---|
| I-15; CORRIDOR | UTAH DEPARTMENT OF TRANSPORTATION | | | | | |
| IN UTAH COUNTY | REGION THREE -- OREM CITY, UTAH | | | | | |
| PLAN SHEET | ROADWAY DESIGN | | | | | |
| | APPROVAL RECOMM. ____ DATE ____ PROJECT DESIGN ENGINEER | DESIGN JAH 02-05 | CHECK SMM 02-05 | REVIEW | | |
| PROJECT NUMBER SP-15-6(52)241 | APPROVED FOR USE BY UDOT ____ DATE ____ PRECONSTRUCTION ENGINEER | DRAWN JAH 02-05 | CHECK SMM 02-05 | DATE ____ | | |
| | | QUANT. JAH 02-05 | CHECK SMM 02-05 | BY ____ | | |

| NO. | DATE | DESIGN REV. BY | MAPS CORR. BY | PARCELS AFFECTED | REQUEST BY | REMARKS |
|---|---|---|---|---|---|---|
| | | ORIGINAL SUBMISSION FOR AUTHORIZATION | | | | |
| | DATE | REVISIONS | | | | |

UTAH COUNTY

SHEET NO. RD-96

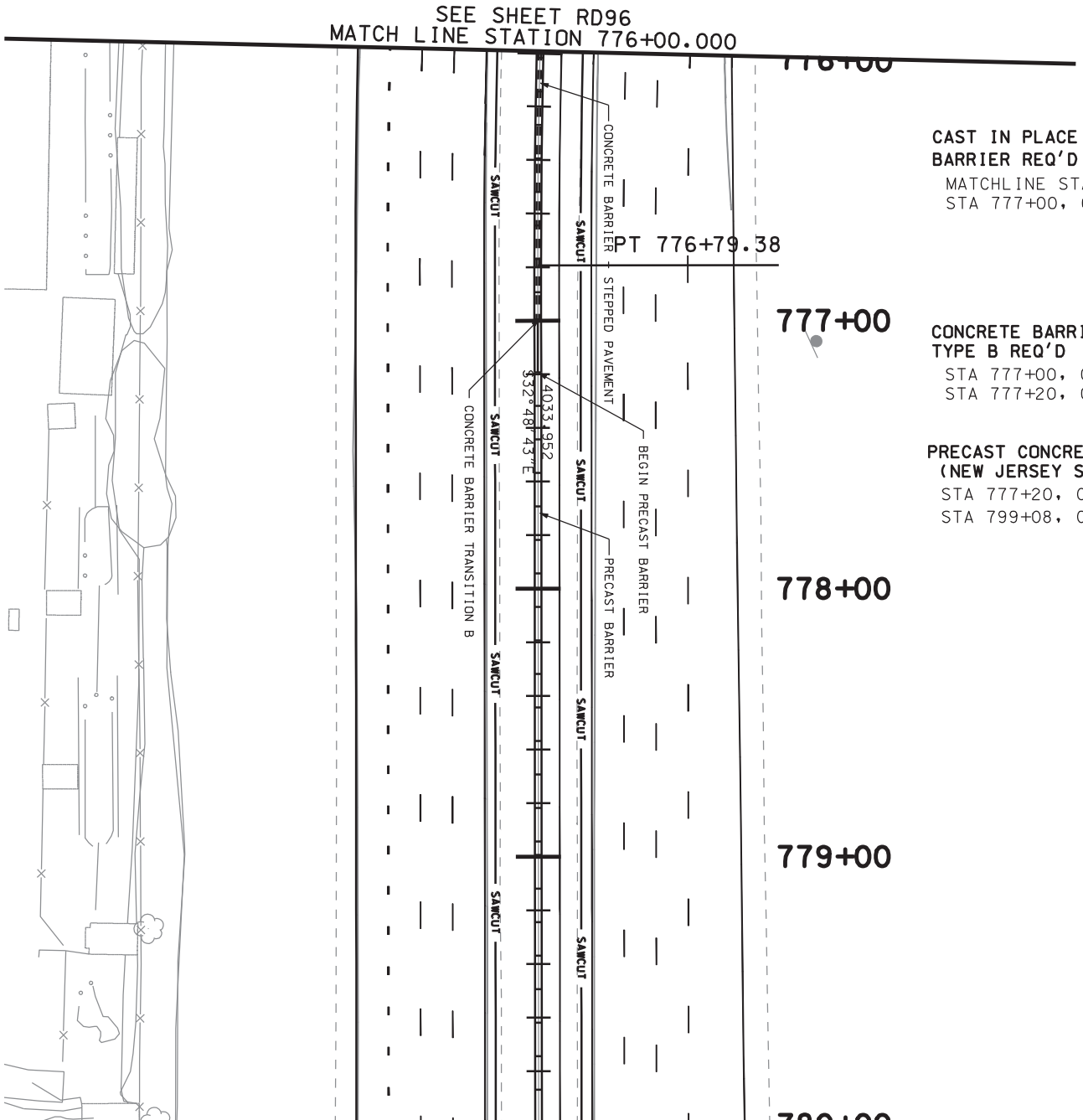


**CAST IN PLACE CONSTANT SLOPE BARRIER REQ'D**

MATCHLINE STA 776+00, CL TO
STA 777+00, CL

**CONCRETE BARRIER TRANSITION TYPE B REQ'D**

STA 777+00, CL TO
STA 777+20, CL

**PRECAST CONCRETE FULL BARRIER (NEW JERSEY SHAPE) REQ'D**

STA 777+20, CL TO
STA 799+08, CL

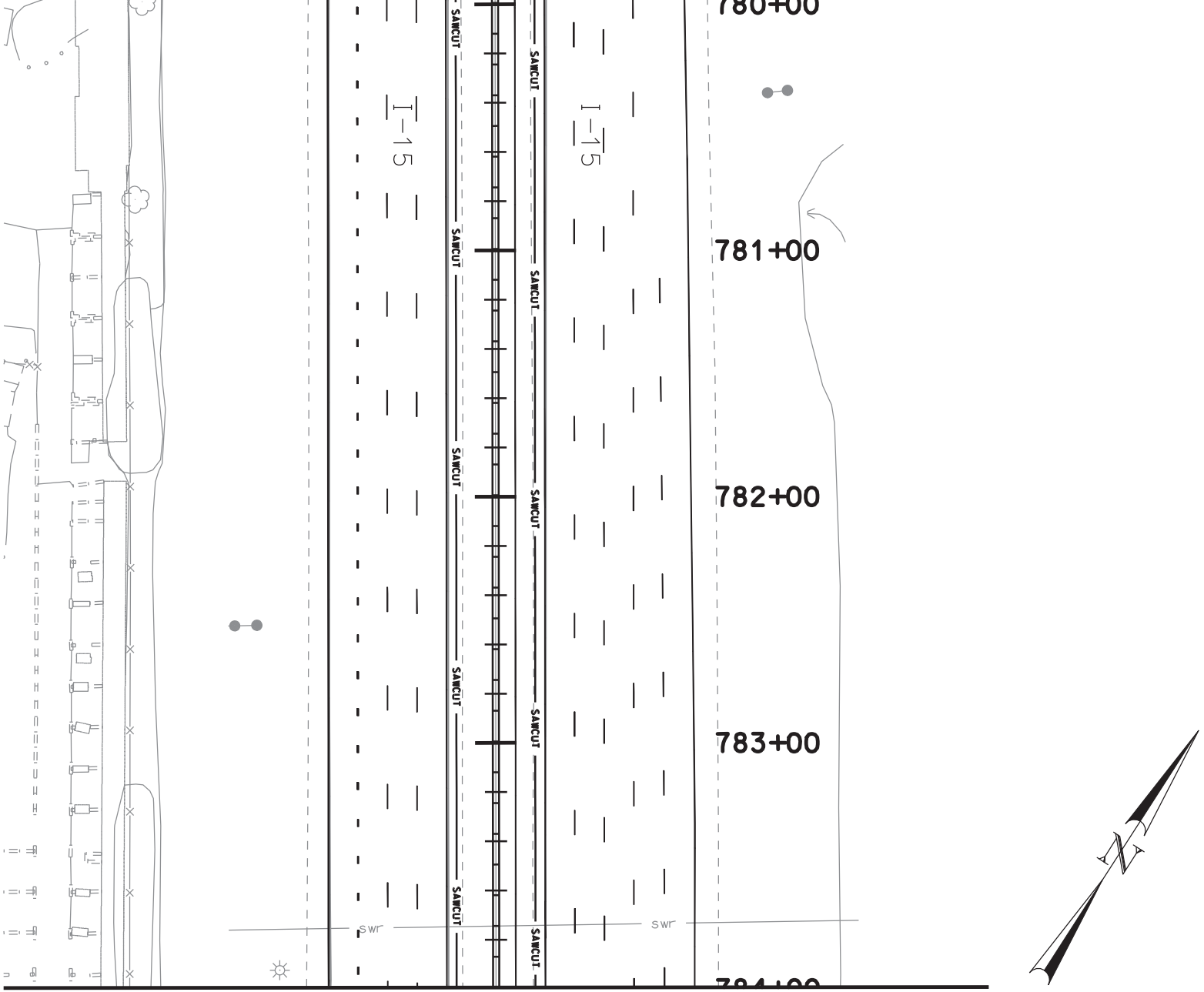


MATCH LINE STATION 784+00.000
SEE SHEET RD98

| | | | | | |
|---|---|---|---|---|---|
| I-15; CORRIDOR | UTAH DEPARTMENT OF TRANSPORTATION | | | | |
| IN UTAH COUNTY | REGION THREE -- OREM CITY, UTAH | | | | |
| PLAN SHEET | ROADWAY DESIGN | | | | |
| | APPROVAL RECOMM. DATE / PROJECT DESIGN ENGINEER | DESIGN JAH 02-05 | CHECK SMM 02-05 | REVIEW | |
| PROJECT NUMBER SP-15-6(52)241 | APPROVED FOR USE BY UDOT DATE / PRECONSTRUCTION ENGINEER | DRAWN JAH 02-05 | CHECK SMM 02-05 | DATE | |
| | | QUANT. JAH 02-05 | CHECK SMM 02-05 | BY | |

| NO. | DATE | DESIGN REV. BY | MAPS CORR. BY | PARCELS AFFECTED | REQUEST BY | REMARKS |
|---|---|---|---|---|---|---|
| | | ORIGINAL SUBMISSION FOR AUTHORIZATION | | | | |
| | DATE | REVISIONS | | | | |

UTAH COUNTY

SHEET NO. RD-97

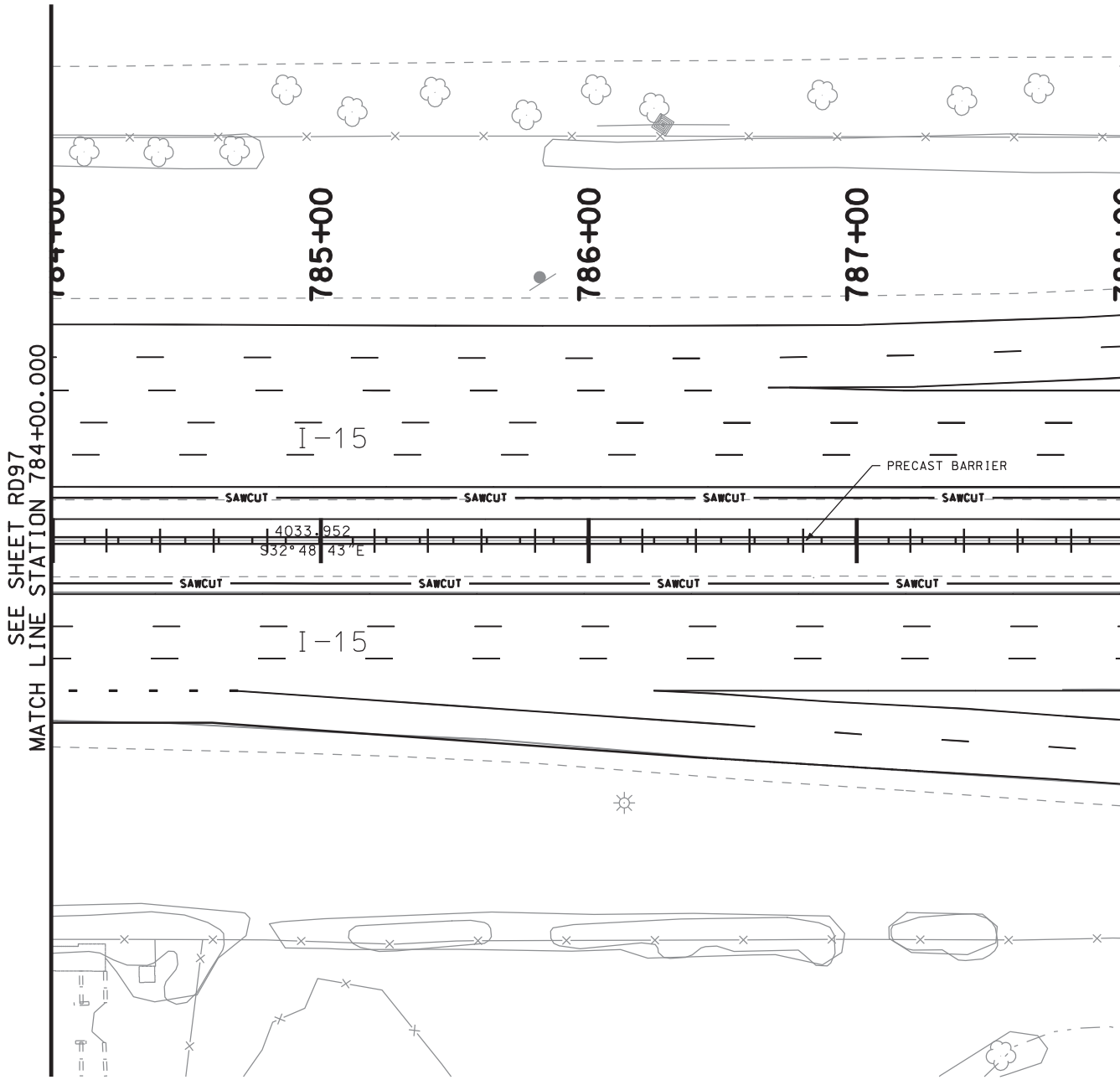


DGN File:IP_PWPsdms1715\RD-098.dgn

02-MAY-2005

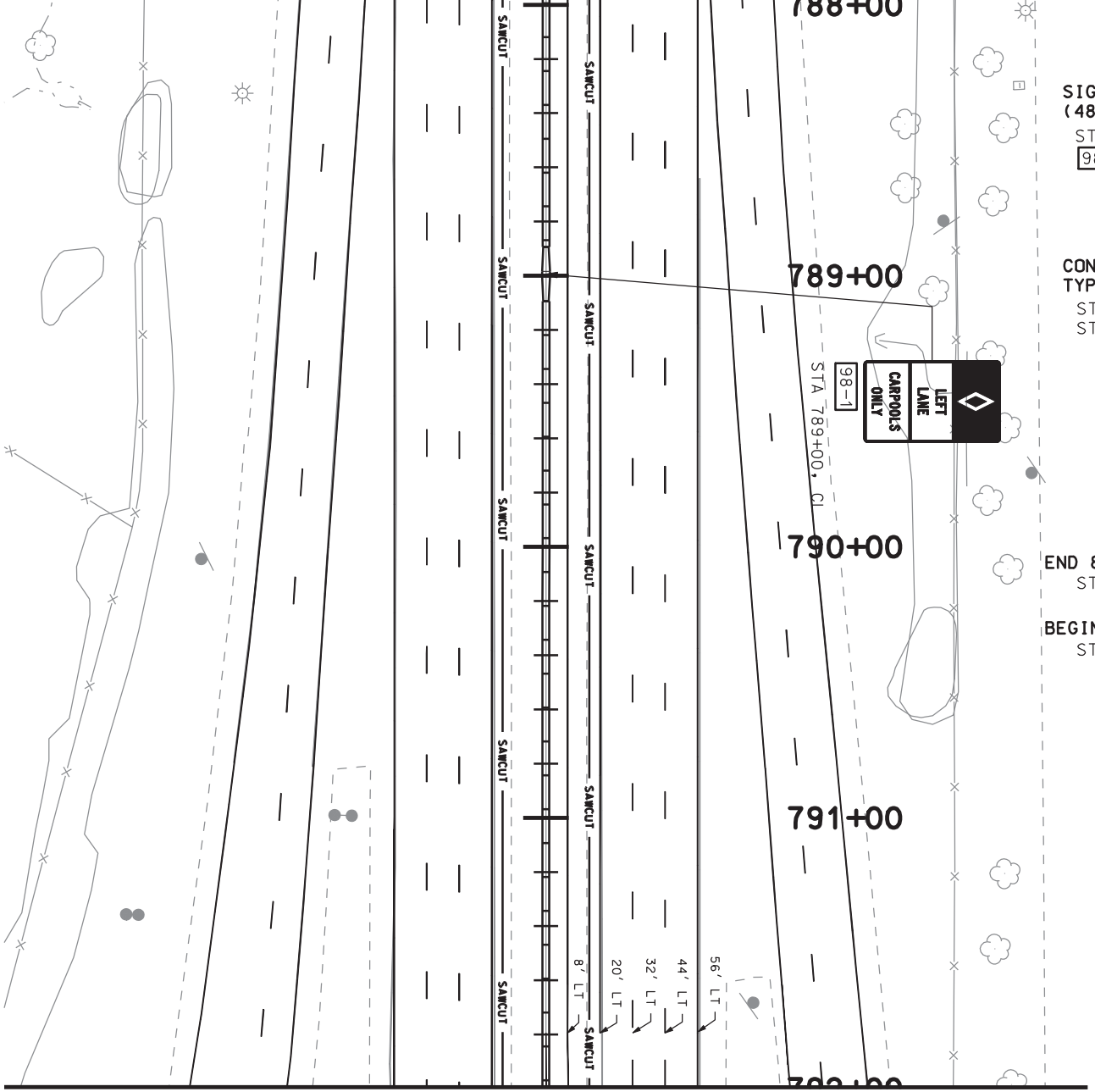


SIGN TYPE P-1 REQ'D
(48 INCH X 84 INCH)
STA 789+00, CL
98-1

CONCRETE BARRIER TRANSITION
TYPE C REQ'D
STA 788+90, CL TO
STA 789+10, CL

END 8" SOLID WHITE LINE
STA 791+80, LT

BEGIN 4" SOLID YELLOW TAPER
STA 791+80, LT

MATCH LINE STATION 792+00.000
SEE SHEET RD99

| | | | | | | |
|---|---|---|---|---|---|---|
| SHEET NO. RD-98 | UTAH COUNTY | I-15; CORRIDOR IN UTAH COUNTY | UTAH DEPARTMENT OF TRANSPORTATION<br>REGION THREE -- OREM CITY, UTAH<br>ROADWAY DESIGN | | | |
| | | PLAN SHEET | APPROVAL RECOMM. ____ DATE ____ PROJECT DESIGN ENGINEER | DESIGN JAH 02-05 | CHECK SMM 02-05 | REVIEW |
| | | PROJECT NUMBER SP-15-6(52)241 | APPROVED FOR USE BY UDOT ____ DATE ____ PRECONSTRUCTION ENGINEER | DRAWN JAH 02-05 | CHECK SMM 02-05 | DATE ____ |
| | | | | QUANT. JAH 02-05 | CHECK SMM 02-05 | BY ____ |

| NO. | DATE | DESIGN REV. BY | MAPS CORR. BY | PARCELS AFFECTED | REQUEST BY | REMARKS |
|---|---|---|---|---|---|---|
| | | ORIGINAL SUBMISSION FOR AUTHORIZATION | | | | |

DATE REVISIONS

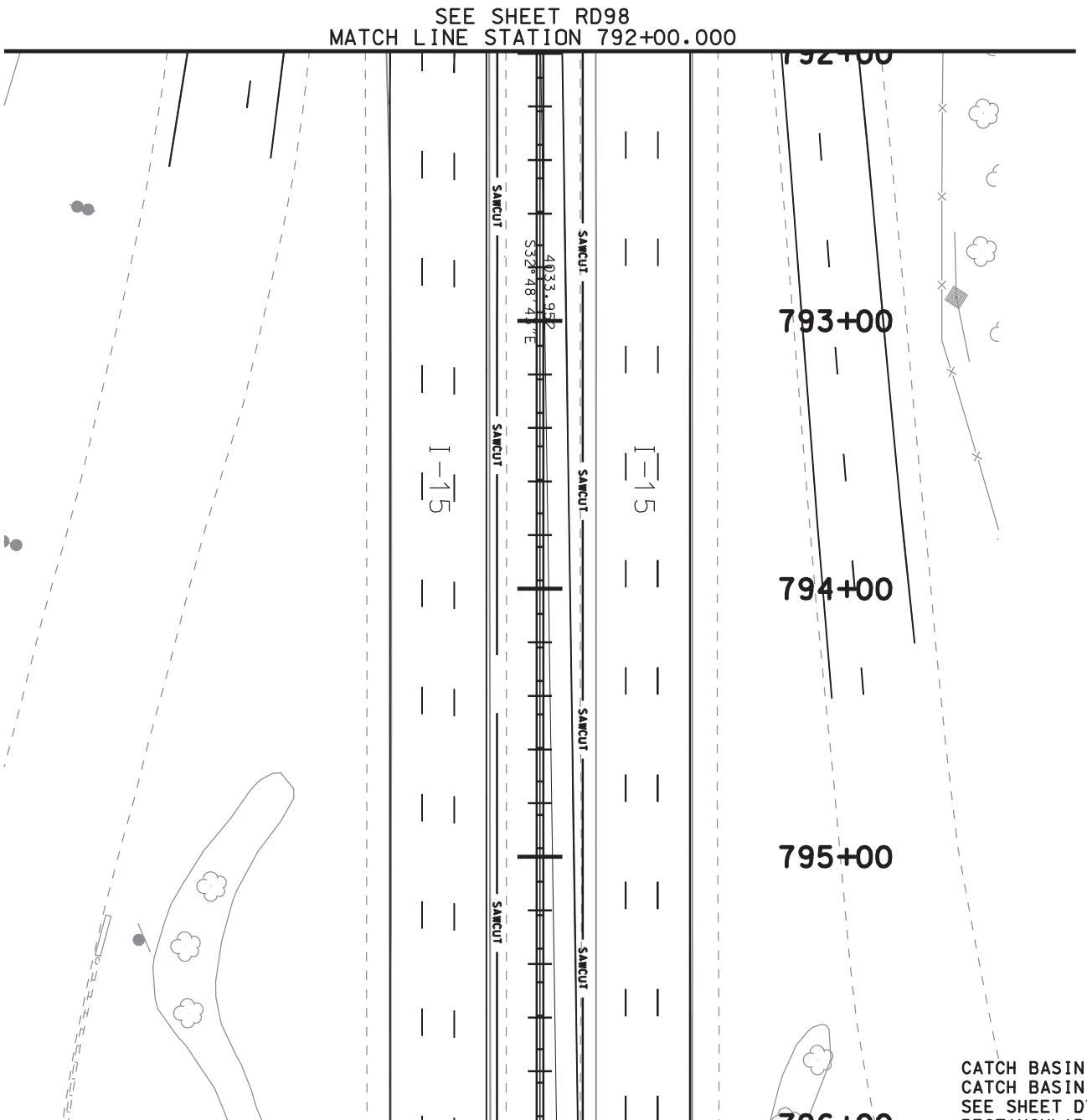
SEE SHEET RD98
MATCH LINE STATION 792+00.000
792+00
793+00
794+00
795+00
796+00
I-15
I-15
SAWCUT
SAWCUT
SAWCUT
SAWCUT
SAWCUT
SAWCUT
4033.95
S32°48'41"E
CATCH BASIN NO. 99B
CATCH BASIN, DETAIL DWG DT-7 REQ'D
SEE SHEET DT-7

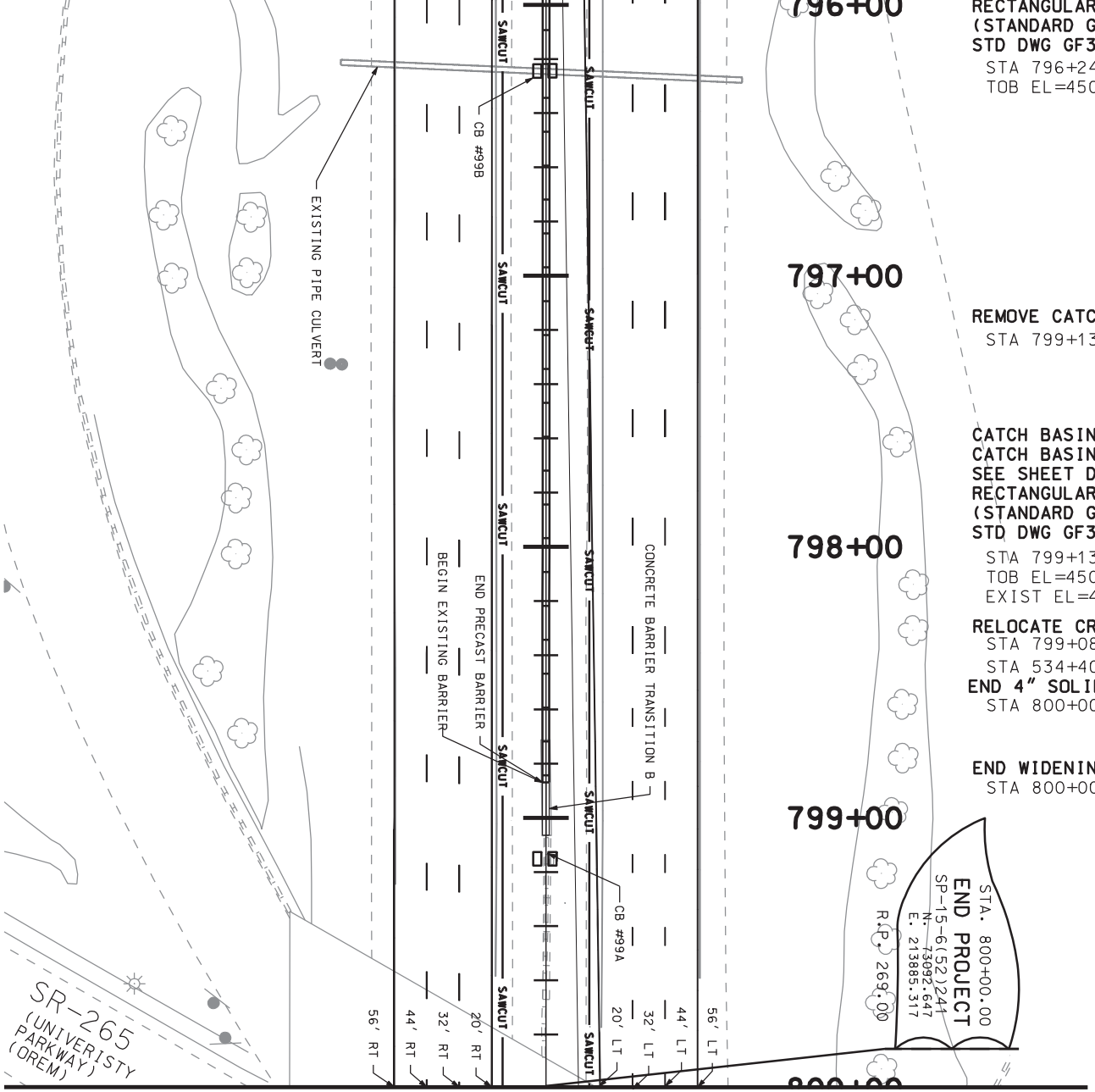


| | | | | | |
|---|---|---|---|---|---|
| I-15; CORRIDOR | UTAH DEPARTMENT OF TRANSPORTATION | | | | |
| IN UTAH COUNTY | REGION THREE -- OREM CITY, UTAH | | | | |
| PLAN SHEET | ROADWAY DESIGN | | | | |
| | APPROVAL RECOMM. DATE / PROJECT DESIGN ENGINEER | DESIGN JAH 02-05 | CHECK SMM 02-05 | REVIEW | |
| | APPROVED FOR USE BY UDOT DATE / PRECONSTRUCTION ENGINEER | DRAWN JAH 02-05 | CHECK SMM 02-05 | DATE | |
| PROJECT NUMBER SP-15-6(52)241 | | QUANT. JAH 02-05 | CHECK SMM 02-05 | BY | |

| NO. | DATE | DESIGN REV.BY | MAPS CORR.BY | PARCELS AFFECTED | REQUEST BY | REMARKS |
|---|---|---|---|---|---|---|
| | | ORIGINAL SUBMISSION FOR AUTHORIZATION | | | | |
| DATE | | REVISIONS | | | | |

UTAH COUNTY

SHEET NO. RD-99

# UT SH

## DATE OF SURVEY:

THIS PLAN SHOWS SUBSURFACE AND AERIAL UTILITIES AS OF MARCH 3, 2005.

## QUALITY LEVELS:

Phase I and Phase II SUE activities allow the assignment of ASCE/C-I 38-02 standard "quality levels" to the mapped underground utilities. The following four quality levels are used to identify the degree of accuracy to which the utilities are mapped:

(1) QUALITY LEVEL D (QL D): Information derived from existing records or oral recollections. Adequate for rudimentary planning or background purposes only.

(2) QUALITY LEVEL C (QL C): Information obtained by surveying and plotting visible above ground utility features and by using professional judgment in correlating this information to QL D information. Use of this data alone may result with 15-30% of underground utilities omitted or plotted with more that two feet of error according to FHWA studies.

(3) QUALITY LEVEL B (QL B): Information obtained through the application of appropriate surface geophysical methods to determine the existence and approximate horizontal position of subsurface utilities. QL B data should be reproducible by surface geophysics at any point of their depiction. This information is surveyed to applicable tolerances defined by the project and reduced onto plan documents.

(4) QUALITY LEVEL A (QL A): Precise horizontal and vertical location of utilities obtained by the actual exposure (or verification of previously exposed and surveyed utilities) and subsequent measurement of subsurface utilities, usually at a specific point. Vaccuum excavation equipment is typically used to minimize the potential for utility damage. A precise horizontal and vertical location as well as other utility attributes are shown on plan documents.

ACCURACY OF QL B SUBSURFACE DATA: The accuracy of subsurface data (thus the position of the designating marks (i.e. paint)) can be influenced by factors beyond Consultant's control, such as conductivity of materials and the surroundings, moisture, proximity of other underground utilities or structures, depth, etc. Markings placed on the grou by Consultant are not to be used for excavation purposes. The use of information provided by Consultant does not relieve any contractor from the duty to comply with applicable utility damage prevention laws and regulations, including but no limited to, giving notifications to utility owners or "one-call" centers, if any, before excavation.

NOTE: ALL UTILITIES ARE DESIGNATED QL B UNLESS OTHERWISE NOTED

## TABLE OF CONTENTS:


| SHEET NUMBER | SHEET CONTENTS |
|---|---|
| UT 1 | SUE Legend and Notes Sheet |
| UT 2 | BRIDGE C-340 |
| UT 3 | BRIDGE C-341 |
| UT 4 | BRIDGE C-342 |
| UT 5 | BRIDGE F-09 |
| UT 6 | BRIDGE C-343 |
| UT 7 | BRIDGE C-345 |
| UT 8 | BRIDGE C-346 |
| UT 9 | BRIDGE C-352 |
| UT 10 | BRIDGE C-353 |
| UT 11 | BRIDGE F-13 |
| UT 12 | BRIDGE F-14 |
| UT 13 | BRIDGE F-15 |
| UT 14 | BRIDGE F-16 |
| UT 15 | Median Segment 1 (C-340 TO C-343) |
| UT 16 | Median Segment 2 (C-343 TO C-346) |
| UT 17 | Median Segment 3 (C-346 TO C-352) |
| UT 18 | Median Segment 4 (C-352 TO F-16) |


02-MAY-2005 C:\N Files IP_PW\Pdms\LV75\L4123_UTMedian

# HEET NOTES

## LEGEND

| | | | | |
|---|---|---|---|---|
| GAS METER | GUY ANCHOR | WATER METER | FIBER OPTIC CABLE | OVERHEAD TELEPHONE LINE |
| GAS VALVE | LIGHT POLE | WATER VALVE | NATURAL GAS LINE | BURIED TELEPHONE LINE |
| DROP INLET | POWER POLE | FIRE HYDRANT | OIL LINE | OVERHEAD TELEVISION LINE |
| STORM DRAIN MANHOLE | POWER TRANSFORMER | WATER MANHOLE | OVERHEAD POWER LINE | BURIED TELEVISION LINE |
| SAN. SEWER MANHOLE | JUNCTION BOX | | BURIED POWER LINE | WATER LINE |
| TELEPHONE MANHOLE | SIGNAL CONTROLLER | | SANITARY SEWER LINE | IRRIGATION LINE |
| TELEPHONE BOOTH | TRAFFIC SIGNAL | | STORM DRAIN LINE | |
| TELEPHONE POLE | | | 1 DIGITAL PHOTOGRAPH REFERENCE VECTOR *Lines indicate breadth and direction of digital photograph shown within the attached .pdf file* | SUE TEST HOLE |
| TELEPHONE PEDESTAL | | | | |

## UTILITY CONTACT LIST:

| Last Name | First Name | Utility Company Name | Utility Type | Phone Number (Work) | Phone Number (cell) | Email Address |
|---|---|---|---|---|---|---|
| Schade | George | American Fork City | Broadband | 801-763-3006 ext. 558 | 801-404-6396 | george@afcity.net |
| Parker | Steve | American Fork Water | Water | 801-763-3060 | | |
| Lanhingoa | Lyndon | Comcast | Broadband/Cable | 801-401-3048 | 801-831-7026 | |
| Jones | Shauna | Electric Lightwave | Fiber Optic | 801-924-6674 | | |
| Shaw | K.C. | Geneva Steel | Water | 801-227-9276 | | |
| Olsen | Rod | Lehi Public Works | Power | 801-768-4833 | 801-830-8936 | |
| Barnes | Lee | Lehi Public Works | Sewer/Water | 801-768-4833 | 801-836-1036 | |
| Kendall | Dennis | Lindon City Public Works | Water/Sewer | 801-796-7954 | | |
| Larsen | Keith | Orem City | Fiber Optic | 801-229-9545 | | |
| Love | Sullivan | Orem City | Water | | 801-310-3913 | |
| Gifford | Ed | Orem City Engineer | | 801-229-7333 | | |
| Kelley | Sam | Orem City Engineering | | 801-229-7326 | | |
| Burton | Lawrence | Orem City Public Utilities | Sewer | 801-229-7471 | | |
| Sabey | Rick | Orem City Public Utilities | Storm Drain | 801-229-7545 | | |
| Batty | Layne | Orem City Public Utilities | Water | 801-229-7552 | | lebatty@orem.org |
| Gray | Lane | Orem City Public Utilities | Water | 801-229-7596 | | |
| Mills | Frank | Pleasant Grove | Sewer | 801-785-5045 ext. 18 | | |
| Lee | Bill | Questar | Gas | 801-324-3052 | | |
| Stapley | Jeff | Qwest | Telephone | 801-974-8505 | 801-259-7073 | |
| Terry | Mike (Tiny) | Touch America/AT&T | Fiber | 480-844-5710 | 602-684-2912 | |
| Mayne | Garland | TSSD | Sewer | 801-756-5231 | | |
| Sawsak | Barry | UDOT Region 3 | | 801-227-8018 | | |
| Jackson | Grant | UDOT Region 3 Signals | Power | 801-227-8040 | 801-830-9546 | |
| Anderson | Terrel | Union Pacific Rail Road | Railroad | 801-212-3939 | | taanders@up.com |
| Turner | Gary | Utah Logos | Other | 801-263-2263 | | |
| Steele | Mark | Utah Power (Lindon) | Power | 801-756-1220 | | marksteele@pacificorp.com |
| Christensen | Don | Utah Power & Light | Power | 801-220-2218 | | |
| Burton | Scott | Utah Power & Light Transmissions | Power | 801- 220-2212 | | |
| Hansen | Kirk | XO Communications | Fiber Optic | 801-983-1712 | 801-983-2816 | |

UTILITY LOCATIONS ARE SHOWN FOR INFORMATION ONLY

Call before you Dig.

801-532-5000

UTILITY NOTIFICATION CENTER

| NO. | DATE | DESIGN REV. BY | MAPS CORR. BY | PARCELS AFFECTED | REQUEST BY | REMARKS |
|---|---|---|---|---|---|---|
| | | | | | | |

ORIGINAL SUBMISSION FOR AUTHORIZATION

REVISIONS

UTAH DEPARTMENT OF TRANSPORTATION

REGION THREE

ROADWAY DESIGN

REVIEW

DESIGN | CHECK | CHECK | DATE

DRAWN BTA 12-04 | CHECK PJM 12-05 | DATE

QUANT. | CHECK | BY

APPROVAL RECOMM. DATE PROJECT DESIGN ENGINEER

APPROVED FOR USE BY UDOT DATE PRECONSTRUCTION ENGINEER

I-15: CORRIDOR IN UTAH COUNTY

UTILITY SHEET

PROJECT NUMBER SP-15-6(52)241

UTAH COUNTY

SHEET NO. UT-01

DGN File:IP_PWP:dms11715\4433_UT02.dgn

02-MAY-2005

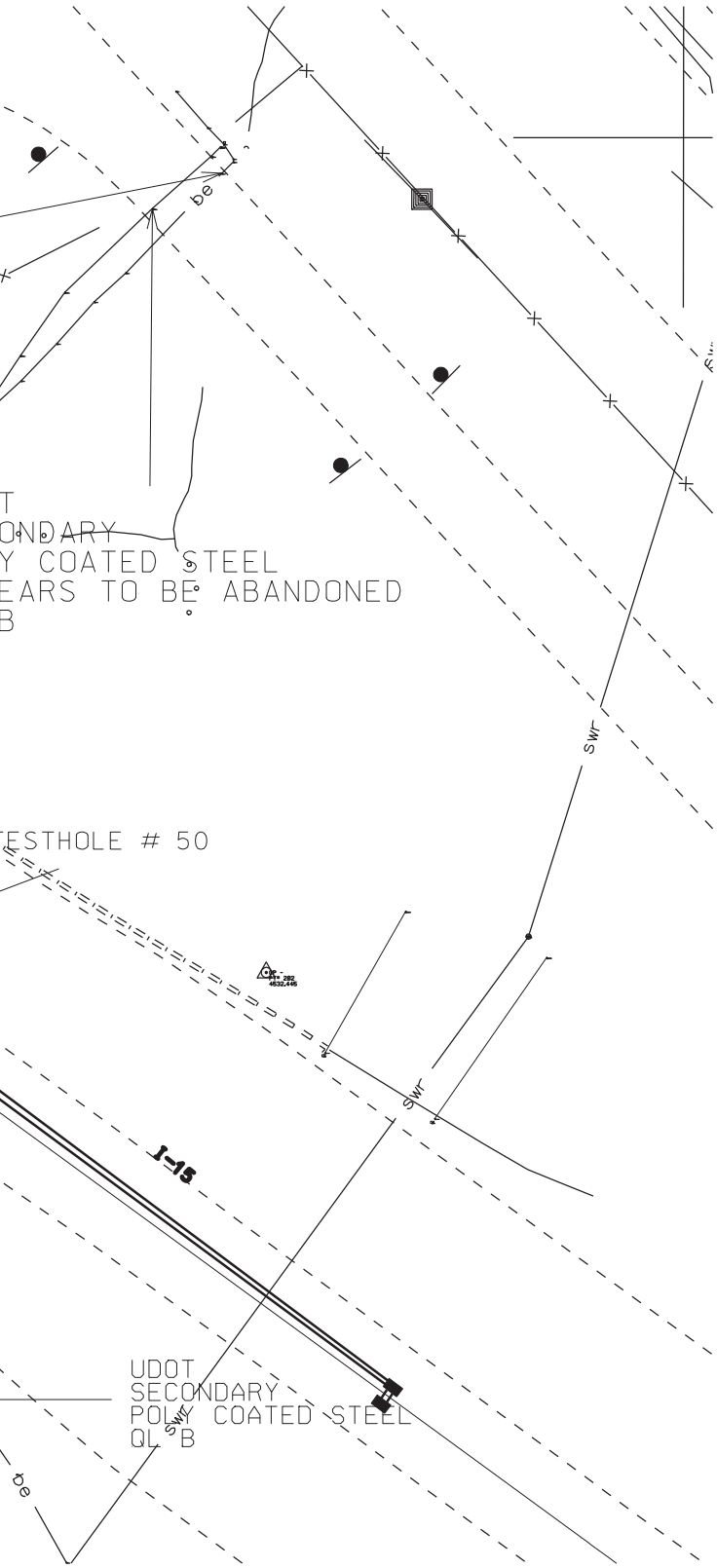


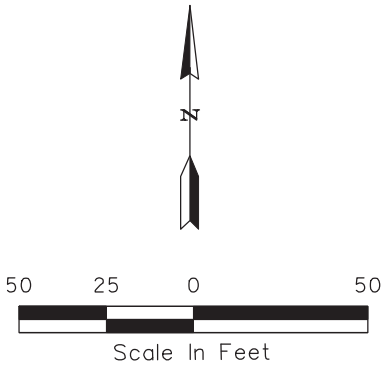


## TEST HOLE DATA

TESTHOLE # 39
QUESTAR GAS
6-inch Steel
DEPTH TO TOP = 5.2 FT
ELEVATION TOP = 4507.54
GROUND ELEVATION = 4512.74
QL A

TESTHOLE # 50
LEHI CITY
FAILED ATTEMPT TO LOCATE FACILITY
DEPTH TO TOP =
ELEVATION TOP =
GROUND ELEVATION = 4512.66
QL

UTILITY LOCATIONS ARE SHOWN
FOR INFORMATION ONLY

Call
before you
Dig.

801-532-5000
UTILITY NOTIFICATION CENTER

| NO. | DATE | DESIGN REV.BY | MAPS CORR.BY | PARCELS AFFECTED | REQUEST BY | REMARKS |
|---|---|---|---|---|---|---|
| | | ORIGINAL SUBMISSION FOR AUTHORIZATION | | | | |

REVISIONS

UTAH DEPARTMENT OF TRANSPORTATION
SALT LAKE CITY, UTAH
STRUCTURES DIVISION

UMS, Inc.

REVIEW

| | | | |
|---|---|---|---|
| DESIGN | | CHECK | |
| DRAWN | BTA 12/04 | CHECK | PJM 12/04 |
| QUANT. | | CHECK | |

APPROVAL RECOMM. DATE PROJECT DESIGN ENGINEER

APPROVED FOR USE BY UDOT DATE PRECONSTRUCTION ENGINEER

DATE

BY

I-15 CORRIDOR UTAH COUNTY

UTILITIES

BRIDGE C-340

PROJECT NUMBER SP-15-6(52)241

UTAH
COUNTY

SHEET NO. UT 2

DGN File:IP_PWP:dms11715\4433_UT03.dgn

02-MAY-2005

| NO. | DATE | DESIGN REV. BY | MAPS CORR. BY | PARCELS AFFECTED | REQUEST BY | REMARKS |
|---|---|---|---|---|---|---|
| | | ORIGINAL SUBMISSION FOR AUTHORIZATION | | | | |

REVISIONS

UTAH DEPARTMENT OF TRANSPORTATION
SALT LAKE CITY, UTAH
STRUCTURES DIVISION

UMS, Inc.

REVIEW

DATE

BY

CHECK

CHECK PJM 12/04

DESIGN

DRAWN BTA 12/04

QUANT.

CHECK

APPROVAL RECOMM. DATE PROJECT DESIGN ENGINEER

APPROVED FOR USE BY UDOT DATE PRECONSTRUCTION ENGINEER

I-15 CORRIDOR UTAH COUNTY

UTILITIES

BRIDGE C-341

PROJECT NUMBER SP-15-6(52)241

UTAH
COUNTY

SHEET NO. UT 3

3RD WEST
QUESTAR GAS
4-INCH
POLYETHYLENE
WITH TRACER WIRE
OL B
ONE ADDITIONAL ABANDONED
LINE AND ONE ENTRY CONDUIT
ALSO CROSS I-15 IN THIS VICINITY
TESTHOLE # 2
QWEST COMMUNICATIONS
300-PAIR
POLY COATED TWISTED PAIR COPPER
OL B
TESTHOLE # 1
QUESTAR GAS
2-INCH
POLYETHYLENE WITH TRACER
OL B
TESTHOLE # 4
wtr
fo
sd
sw
sv
g

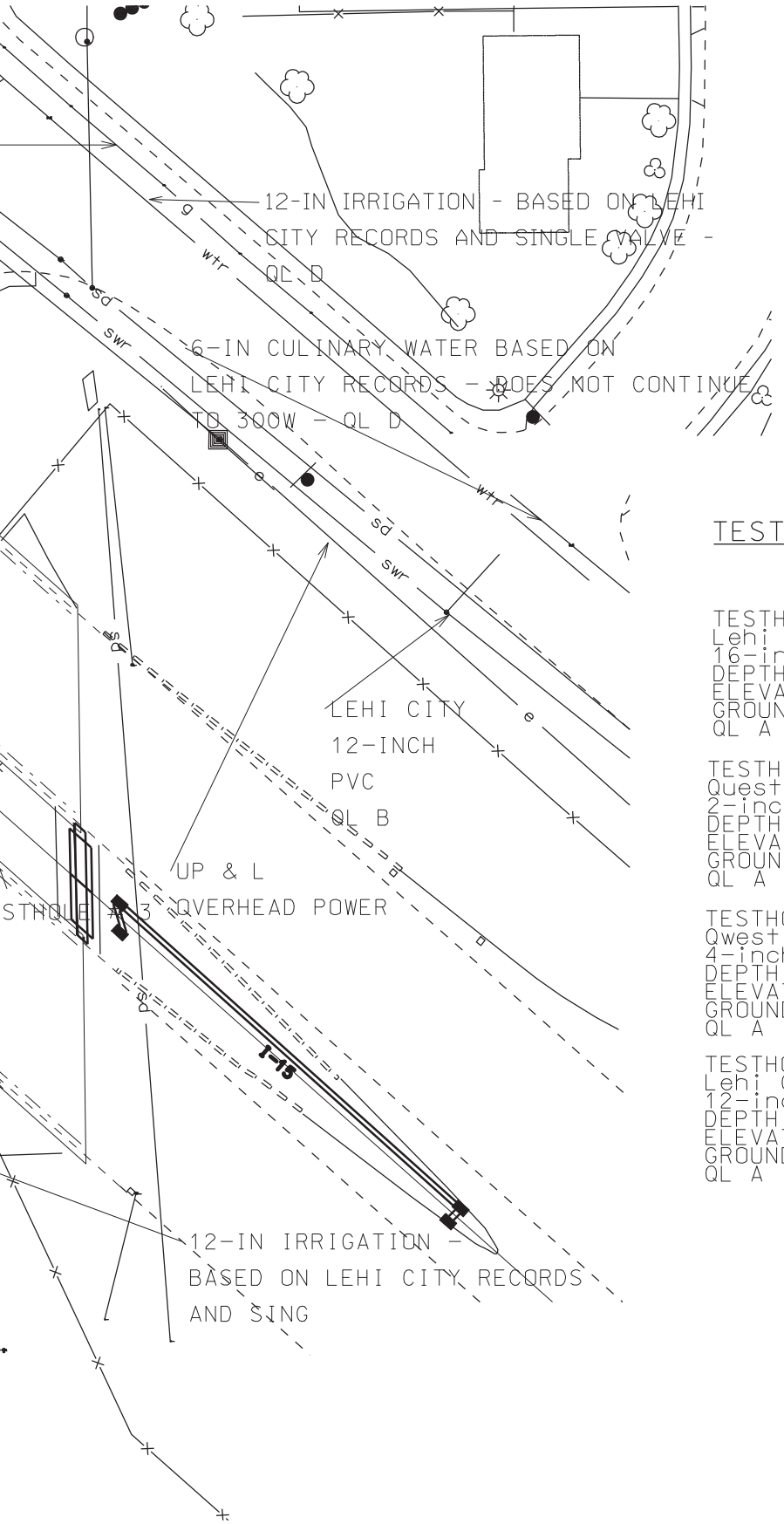


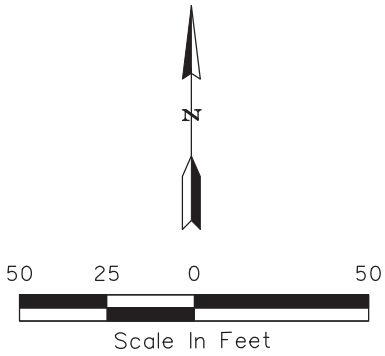


## TEST HOLE DATA

TESTHOLE # 3
Lehi City
16-inch Concrete
DEPTH TO TOP = 4.1 FT
ELEVATION TOP = 4554.93
GROUND ELEVATION = 4559.03
QL A

TESTHOLE # 2
Questar Gas
2-inch Polyethylene
DEPTH TO TOP = 3.3 FT
ELEVATION TOP = 4556.54
GROUND ELEVATION = 4559.84
QL A

TESTHOLE # 1
Qwest Communications
4-inch PVC
DEPTH TO TOP = 2.9 FT
ELEVATION TOP = 4556.97
GROUND ELEVATION = 4559.87
QL A

TESTHOLE # 4
Lehi City
12-inch PVC
DEPTH TO TOP = 3.99 FT
ELEVATION TOP = 4554.86
GROUND ELEVATION = 4558.85
QL A

UTILITY LOCATIONS ARE SHOWN FOR INFORMATION ONLY

Call before you Dig.

801-532-5000
UTILITY NOTIFICATION CENTER

| NO. | DATE | DESIGN REV.BY | MAPS CORR.BY | PARCELS AFFECTED | REQUEST BY | REMARKS |
|---|---|---|---|---|---|---|
| | | ORIGINAL SUBMISSION FOR AUTHORIZATION | | | | |

REVISIONS

UTAH DEPARTMENT OF TRANSPORTATION
SALT LAKE CITY, UTAH
STRUCTURES DIVISION

UMS, Inc.

REVIEW

DESIGN ____ CHECK ____ DATE ____
DRAWN BTA 12/04 CHECK PJM 12/04 BY ____
QUANT. ____ CHECK ____

APPROVAL RECOMM. ____ DATE ____ PROJECT DESIGN ENGINEER
APPROVED FOR USE BY UDOT ____ DATE ____ PRECONSTRUCTION ENGINEER

I-15 CORRIDOR UTAH COUNTY
UTILITIES
BRIDGE C-342

PROJECT NUMBER SP-15-6(52)241

UTAH COUNTY

SHEET NO. UT 4

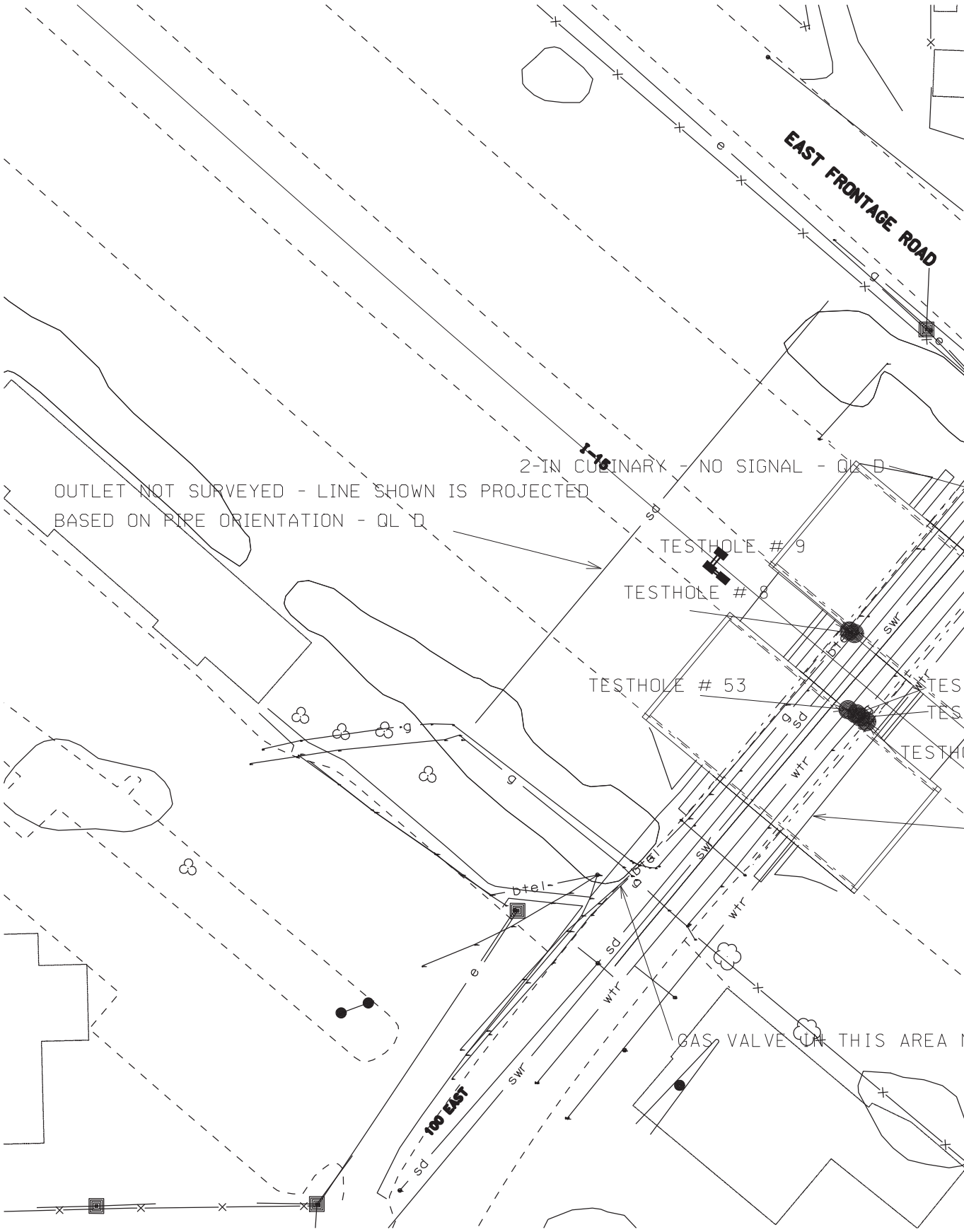


DGN File:IP_PWP:dms11715\4433_UT05.dgn

02-MAY-2005

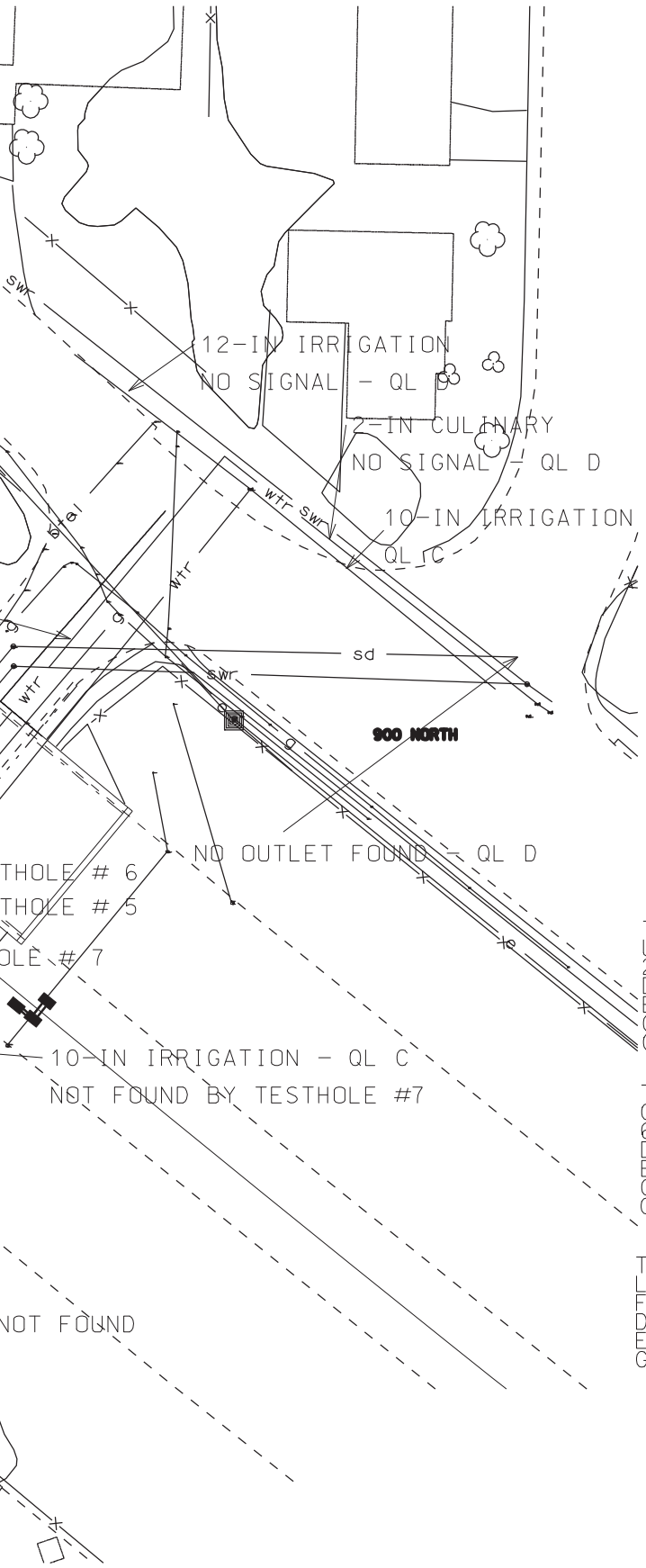


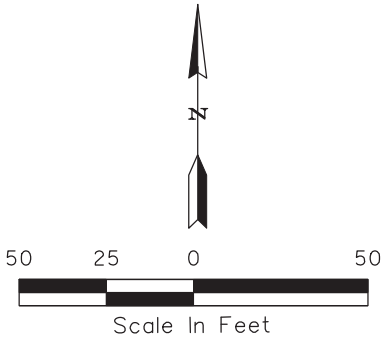


## TEST HOLE DATA

TESTHOLE # 9
Qwest Communications
2-inch Poly Coated Lead Cable
DEPTH TO TOP = 2.1 FT
ELEVATION TOP = 4533.45
GROUND ELEVATION = 4535.55
QL A

TESTHOLE # 5
Questar Gas
4-inch Tar Wrapped Steel
DEPTH TO TOP = 2.99 FT
ELEVATION TOP = 4532.44
GROUND ELEVATION = 4535.43
QL A

TESTHOLE # 6
Lehi City
FAILED ATTEMPT TO LOCATE FACILITY
DEPTH TO TOP =
ELEVATION TOP =
GROUND ELEVATION = 4535.48

TESTHOLE # 53
UTAH COUNTY
2-INCH
DEPTH TO TOP = 4 FT
ELEVATION TOP = 4531.71
GROUND ELEVATION = 4535.71
QL A

TESTHOLE # 8
Questar Gas
6-inch High Pressure Steel
DEPTH TO TOP = 4.91 FT
ELEVATION TOP = 4530.70
GROUND ELEVATION = 4535.61
QL A

TESTHOLE # 7
Lehi City
FAILED ATTEMPT TO LOCATE FACILITY
DEPTH TO TOP =
ELEVATION TOP =
GROUND ELEVATION = 4535.12

UTILITY LOCATIONS ARE SHOWN
FOR INFORMATION ONLY

Call
before you
Dig.

801-532-5000
UTILITY NOTIFICATION CENTER

| NO. | DATE | DESIGN REV.BY | MAPS CORR.BY | PARCELS AFFECTED | REQUEST BY | REMARKS |
|---|---|---|---|---|---|---|
| | | ORIGINAL SUBMISSION FOR AUTHORIZATION | | | | |

REVISIONS

UTAH DEPARTMENT OF TRANSPORTATION
SALT LAKE CITY, UTAH
STRUCTURES DIVISION

UMS, Inc.

REVIEW

DESIGN ____ CHECK ____
DRAWN BTA 12/04 CHECK PJM 12/04 DATE ____
QUANT. ____ CHECK ____ BY ____

APPROVAL RECOMM. ____ DATE ____ PROJECT DESIGN ENGINEER
APPROVED FOR USE BY UDOT ____ DATE ____ PRECONSTRUCTION ENGINEER

I-15 CORRIDOR UTAH COUNTY
UTILITIES
BRIDGE F-09
PROJECT NUMBER SP-15-6(52)241

UTAH
COUNTY

SHEET NO. UT 5

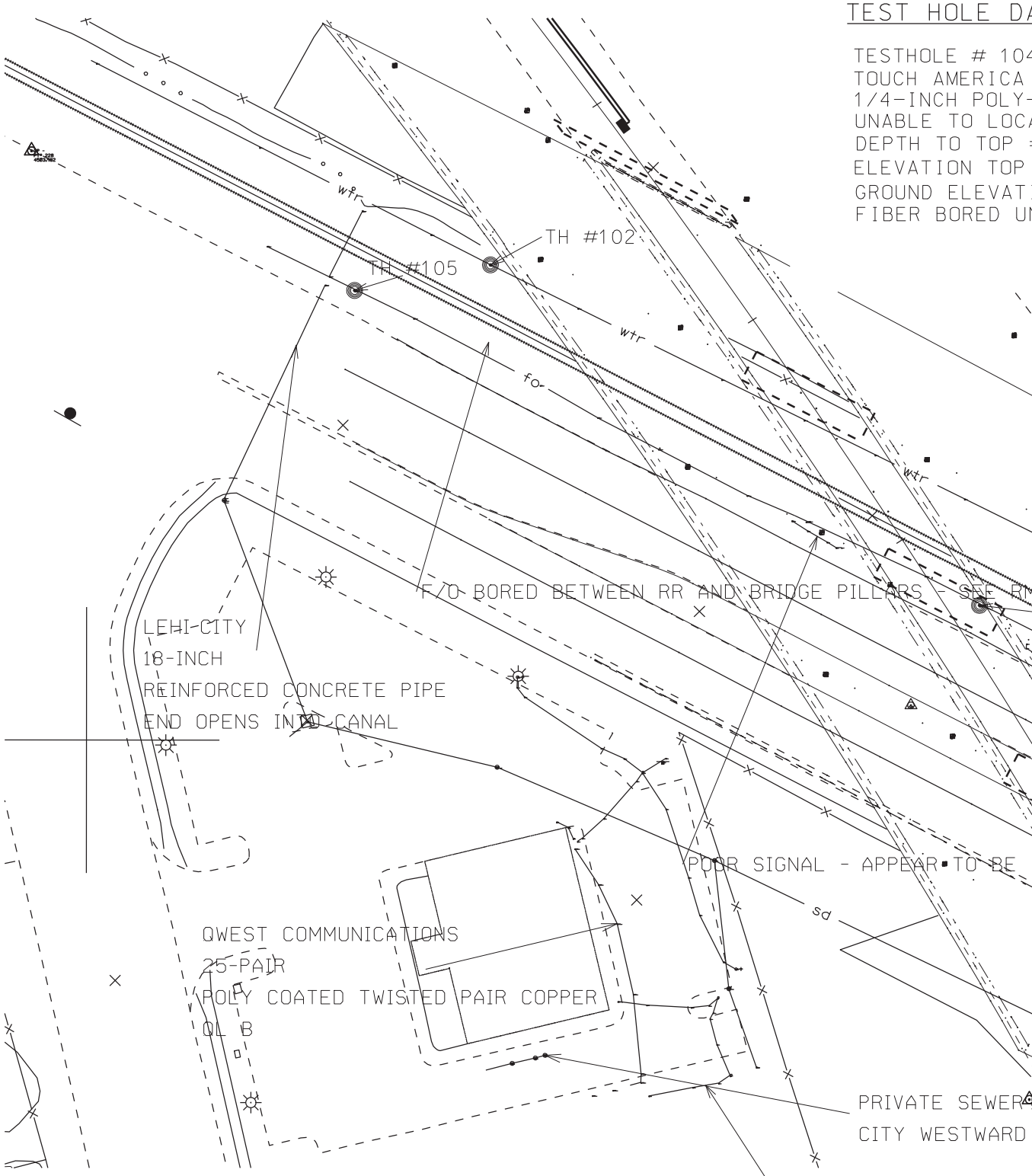


## TEST HOLE DATA

TESTHOLE # 100
LEHI CITY WATER
8-INCH STEEL
DEPTH TO TOP = 3.6 FT
ELEVATION TOP = 4500.79
GROUND ELEVATION = 4504.39
QL A

TESTHOLE # 101
LEHI CITY WATER
8-INCH STEEL
DEPTH TO TOP = 3.5 FT
ELEVATION TOP = 4500.56
GROUND ELEVATION = 4504.06
QL A

TESTHO
LEHI C
8-INCH
DEPTH
ELEVAT
GROUND
QL A

DGN File: IP_PWP:dms11715\4433_UT06.dgn

DGN File:IP_PWP:dms11715\4433_UT06.dgn

02-MAY-2005

ATA

4
FO
-COATED GLASS STRANDS
ATE FACILITY
=
=
ION = 4502.80
NDER BRIDGE PILLAR

TESTHOLE # 105
TOUCH AMERICA FO
1/4-INCH POLY-COATED GLASS STRANDS
DEPTH TO TOP = 7.25 FT
ELEVATION TOP = 4495.35
GROUND ELEVATION = 4502.60
QL A

N

50 25 0 50
Scale In Feet

POLE ABANDONED
TH #101
WT PLANS
TH #104
fo
wtr
fo
TH #103
ABANDONED LINES TO PILLAR LIGHTING
TH #100
wtr
UPRR
fo
sd
INES TO LEHI
FROM HERE
I-15

OLE # 102
CITY WATER
H STEEL
TO TOP = 3.58 FT
TION TOP = 4500.78
ELEVATION = 4504.36

TESTHOLE # 103
TOUCH AMERICA FO
1/4-INCH POLY-COATED GLASS STRANDS
DEPTH TO TOP = 11.08 FT
ELEVATION TOP = 4492.26
GROUND ELEVATION = 4503.34
QL A

UTILITY LOCATIONS ARE SHOWN
FOR INFORMATION ONLY

Call
before you
Dig.

801-532-5000
UTILITY NOTIFICATION CENTER

| NO. | DATE | DESIGN REV.BY | MAPS CORR.BY | PARCELS AFFECTED | REQUEST BY | REMARKS |
|---|---|---|---|---|---|---|
| | | ORIGINAL SUBMISSION FOR AUTHORIZATION | | | | |

REVISIONS

UTAH DEPARTMENT OF TRANSPORTATION
SALT LAKE CITY, UTAH
STRUCTURES DIVISION

UMS, Inc.

REVIEW
CHECK
CHECK PJM 12/04
DATE
BY

DESIGN
DRAWN BTA 12/04
QUANT.

APPROVAL RECOMM. DATE PROJECT DESIGN ENGINEER
APPROVED FOR USE BY UDOT DATE PRECONSTRUCTION ENGINEER

I-15 CORRIDOR UTAH COUNTY
UTILITIES
BRIDGE C-343
PROJECT NUMBER SP-15-6(52)241

UTAH
COUNTY

SHEET NO. UT 6

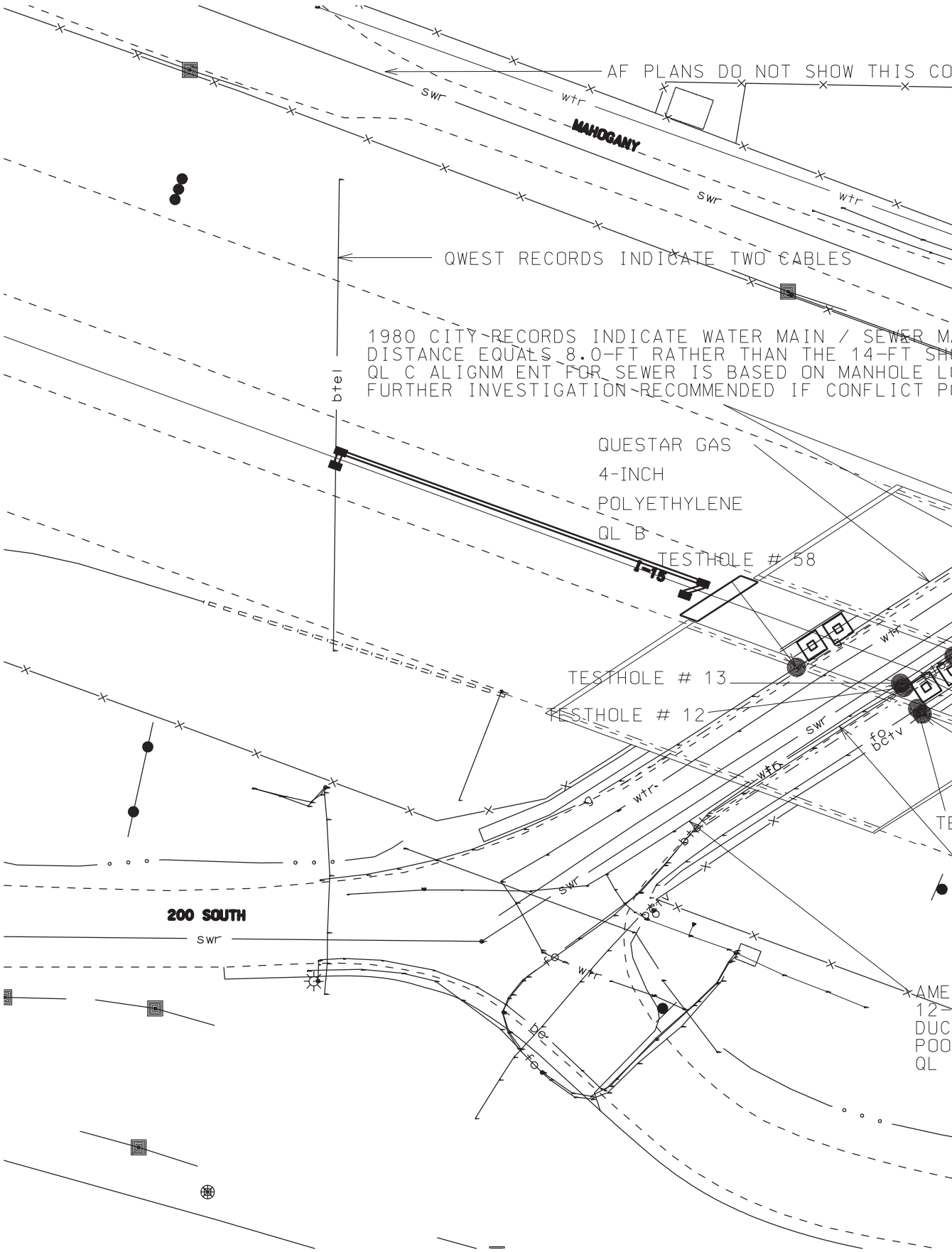


02-MAY-2005

DGN File:IP_PWP:dms11715\1433-UT07.dgn

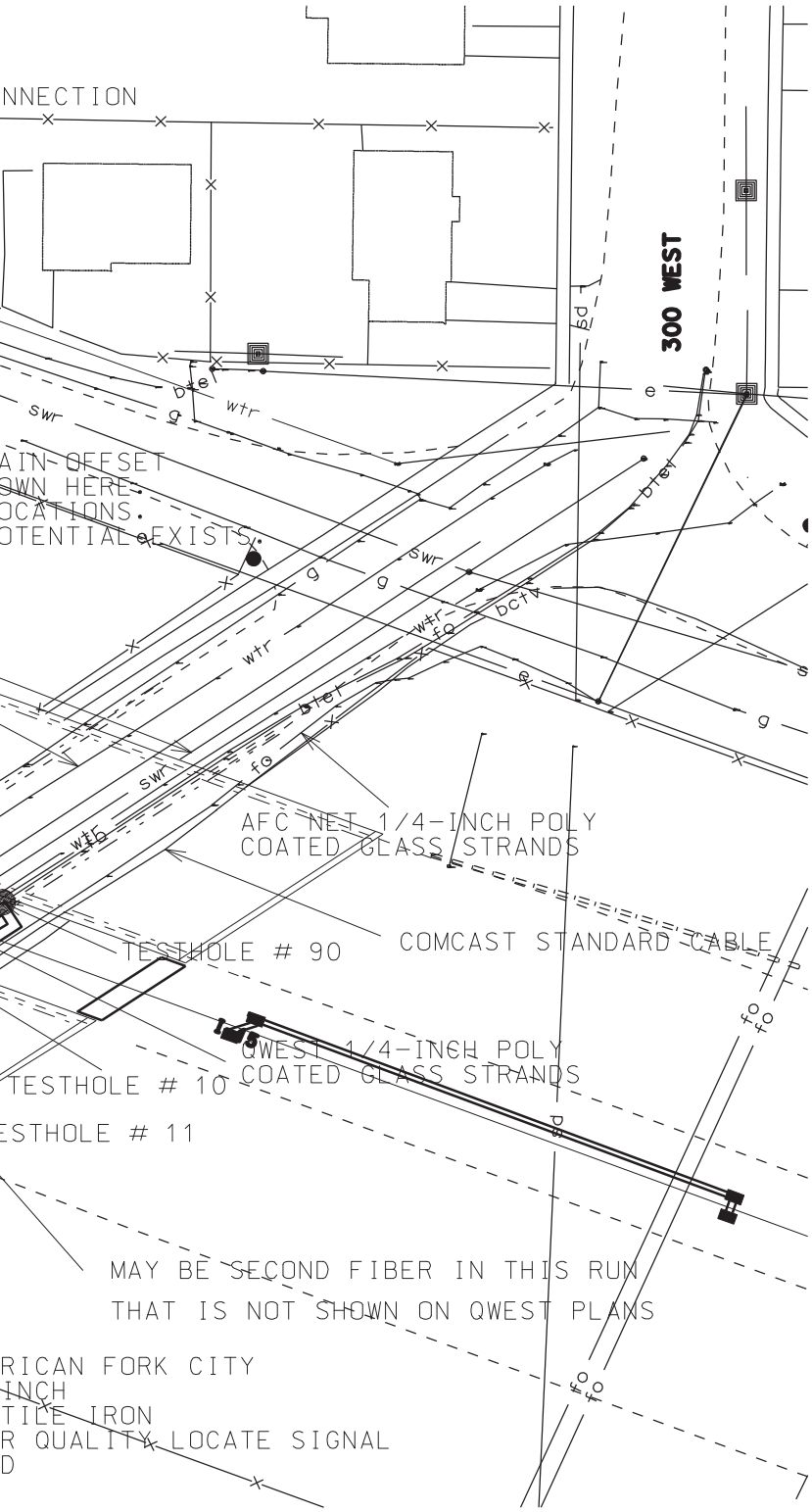


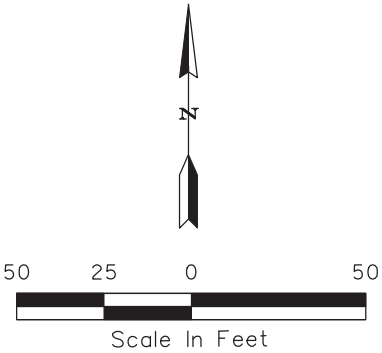


## TEST HOLE DATA

TESTHOLE # 58
QUESTAR
4-INCH
DEPTH TO TOP = 2 FT
ELEVATION TOP = 4510.20
GROUND ELEVATION = 4512.20
QL A

TESTHOLE # 13
American Fork City
12-inch Ductile Iron
DEPTH TO TOP = 4.37 FT
ELEVATION TOP = 4508.49
GROUND ELEVATION = 4512.86
QL A

TESTHOLE # 12
American Fork City
2-inch PVC
DEPTH TO TOP = 2.31 FT
ELEVATION TOP = 4510.51
GROUND ELEVATION = 4512.82
QL A

TESTHOLE # 10
Comcast Communications
1-inch Poly Coated Aluminum
DEPTH TO TOP = 1.86 FT
ELEVATION TOP = 4511.31
GROUND ELEVATION = 4513.17
QL A

TESTHOLE # 90
QWEST
(2)4-INCH PVC
DEPTH TO TOP = 2.9 FT
ELEVATION TOP = 4510.42
GROUND ELEVATION = 4513.32
QL A

TESTHOLE # 11
Qwest Communications
2-inch PVC
DEPTH TO TOP = 3.34 FT
ELEVATION TOP = 4509.79
GROUND ELEVATION = 4513.13
QL A

UTILITY LOCATIONS ARE SHOWN
FOR INFORMATION ONLY

Call
before you
Dig.

801-532-5000
UTILITY NOTIFICATION CENTER

| NO. | DATE | DESIGN REV.BY | MAPS CORR.BY | PARCELS AFFECTED | REQUEST BY | REMARKS |
|---|---|---|---|---|---|---|
| | | ORIGINAL SUBMISSION FOR AUTHORIZATION | | | | |

REVISIONS

UTAH DEPARTMENT OF TRANSPORTATION
SALT LAKE CITY, UTAH
STRUCTURES DIVISION

UMS, Inc.

DESIGN ____ CHECK ____ REVIEW
DRAWN BTA 12/04 CHECK PJM 12/04 DATE
QUANT. ____ CHECK ____ BY

APPROVAL RECOMM. ____ DATE ____ PROJECT DESIGN ENGINEER
APPROVED FOR USE BY UDOT ____ DATE ____ PRECONSTRUCTION ENGINEER

I-15 CORRIDOR UTAH COUNTY
UTILITIES
BRIDGE C-345
PROJECT NUMBER SP-15-6(52)241

UTAH
COUNTY

SHEET NO. UT 7

DGN File:IP_PWP:dms11715\4433_UT08.dgn

02-MAY-2005

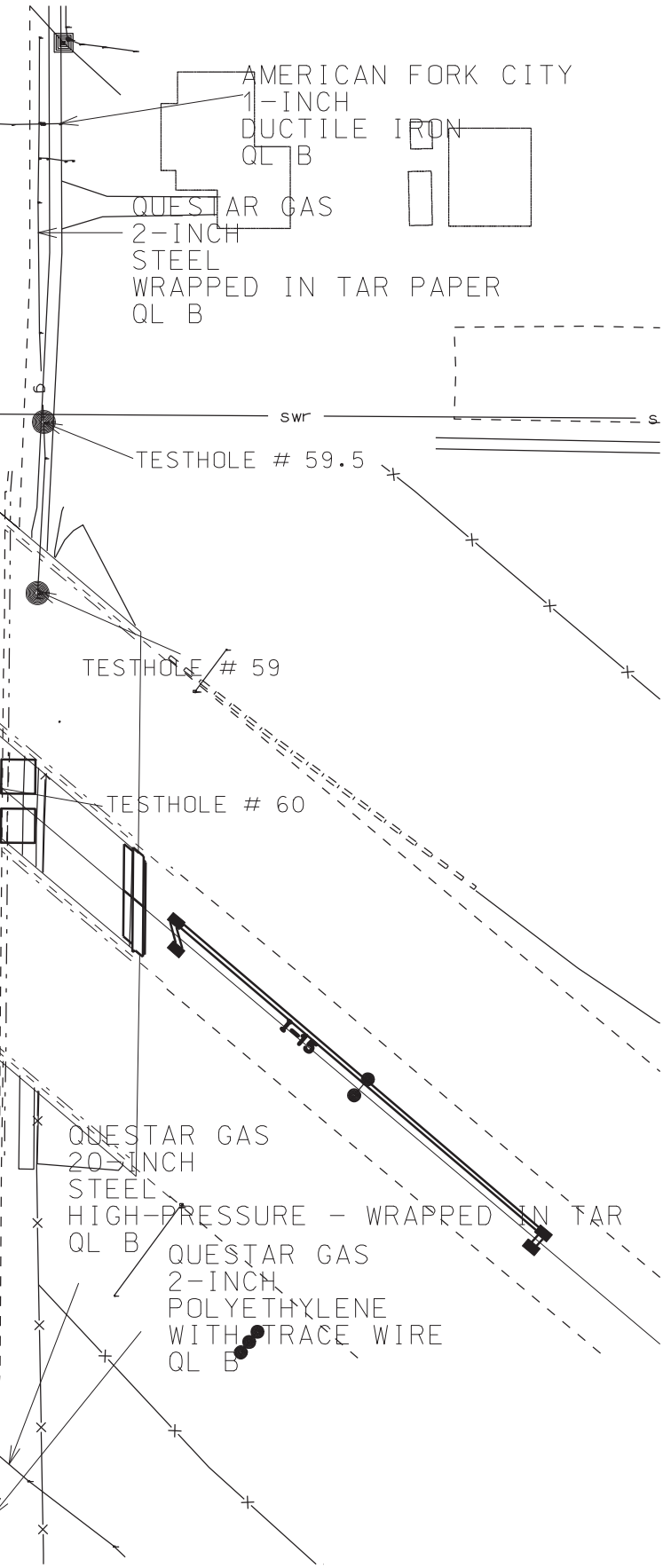


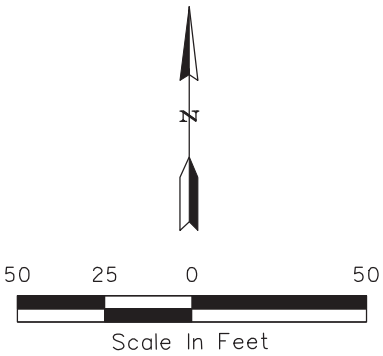


## TEST HOLE DATA

TESTHOLE # 59.5
QUESTAR
2-INCH
DEPTH TO TOP = 5.25 FT
ELEVATION TOP = 4504.00
GROUND ELEVATION = 4509.25
QL A

TESTHOLE # 59
QUESTAR
2-INCH
DEPTH TO TOP = 6.25 FT
ELEVATION TOP = 4502.63
GROUND ELEVATION = 4508.88
QL A

TESTHOLE # 60
AMERICAN FORK
12-INCH
DEPTH TO TOP = 3.1 FT
ELEVATION TOP = 4504.90
GROUND ELEVATION = 4508.00
QL A

UTILITY LOCATIONS ARE SHOWN
FOR INFORMATION ONLY

Call
before you
Dig.

801-532-5000
UTILITY NOTIFICATION CENTER

| NO. | DATE | DESIGN REV.BY | MAPS CORR.BY | PARCELS AFFECTED | REQUEST BY | REMARKS |
|---|---|---|---|---|---|---|
| | | ORIGINAL SUBMISSION FOR AUTHORIZATION | | | | |

REVISIONS

UTAH DEPARTMENT OF TRANSPORTATION
SALT LAKE CITY, UTAH
STRUCTURES DIVISION

UMS, Inc.

REVIEW
DATE
BY

DESIGN
DRAWN BTA 12/04
QUANT.

CHECK
CHECK PJM 12/04
CHECK

APPROVAL RECOMM. DATE PROJECT DESIGN ENGINEER
APPROVED FOR USE BY UDOT DATE PRECONSTRUCTION ENGINEER

I-15 CORRIDOR UTAH COUNTY
UTILITIES
BRIDGE C-346
PROJECT NUMBER SP-15-6(52)241

UTAH
COUNTY

SHEET NO. UT 8

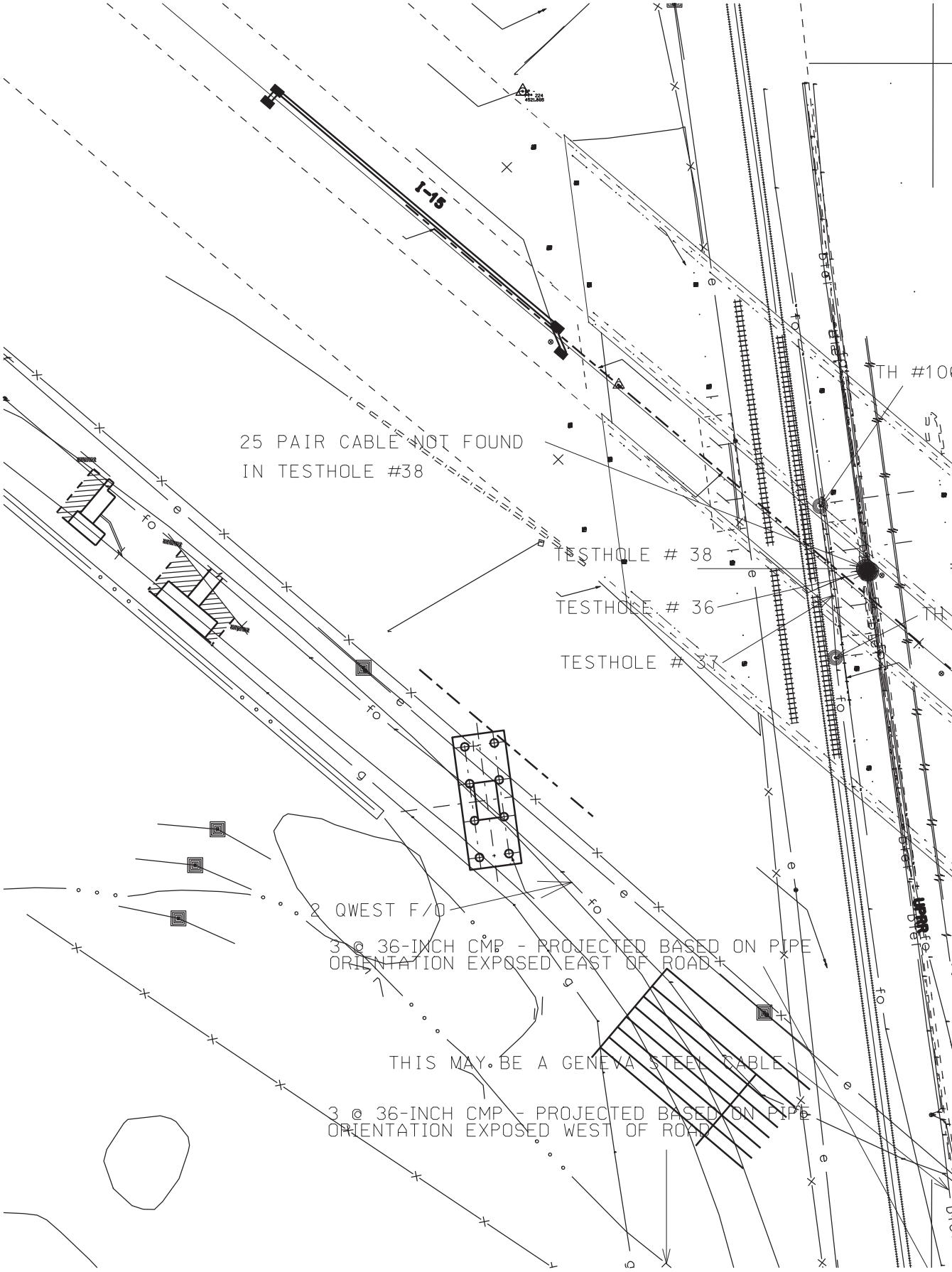


DGN File:IP_PWP:dms11715\4433_UT09.dgn

02-MAY-2005

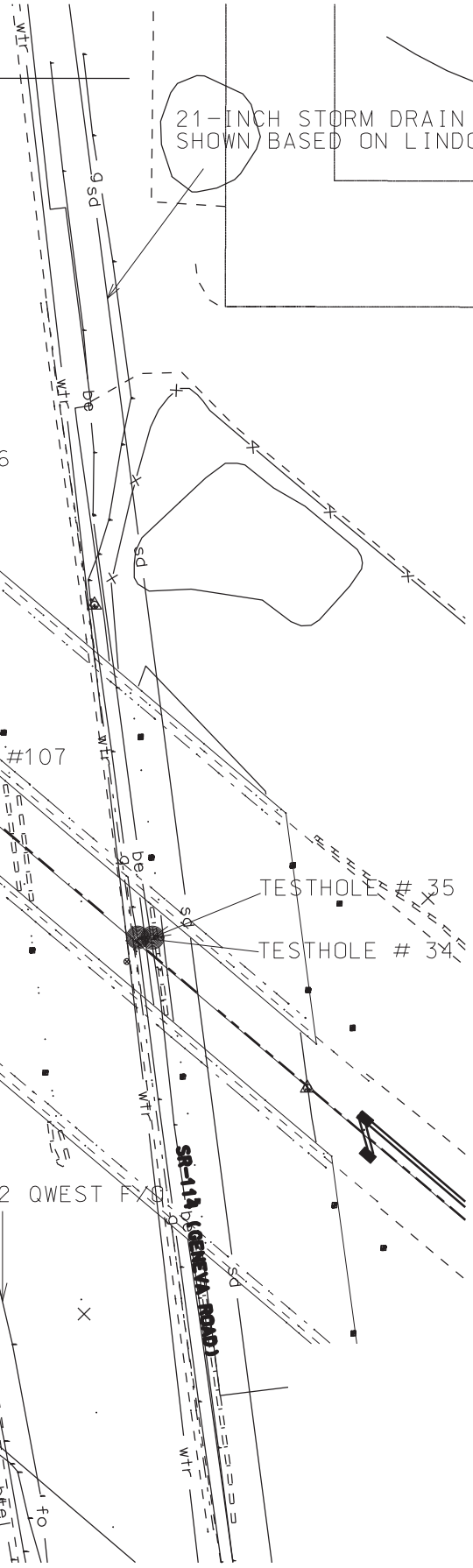


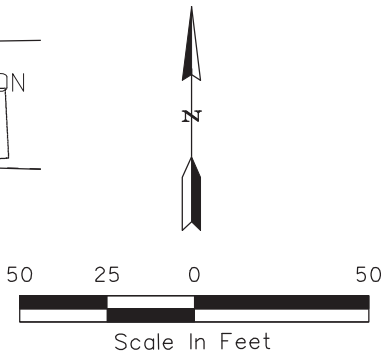


## TEST HOLE DATA

TESTHOLE # 37
Qwest Communications
4-inch PVC
FAILED ATTEMPT TO LOCATE FACILITY
DEPTH TO TOP =
ELEVATION TOP =
GROUND ELEVATION = 4498.86

TESTHOLE # 35
Utah Power & Light
FAILED ATTEMPT TO LOCATE FACILITY
DEPTH TO TOP =
ELEVATION TOP =
GROUND ELEVATION = 4498.66

TESTHOLE # 34
Questar Gas
4-inch Tar Wrapped Steel
DEPTH TO TOP = 3.65 FT
ELEVATION TOP = 4494.85
GROUND ELEVATION = 4498.50
QL A

TESTHOLE # 38
Qwest Communications
FAILED ATTEMPT TO LOCATE FACILITY
DEPTH TO TOP =
ELEVATION TOP =
GROUND ELEVATION = 4498.79
QL A

TESTHOLE # 36
Qwest Communications
4-inch Poly Coated
Copper Twisted Pair
DEPTH TO TOP = 2.5 FT
ELEVATION TOP = 4496.37
GROUND ELEVATION = 4498.87
QL A

TESTHOLE # 107
TOUCH AMERICA FO
FAILED ATTEMPT TO LOCATE FACILITY
DEPTH TO TOP = OVER 11-FEET
ELEVATION TOP =
GROUND ELEVATION = 4494.43

TESTHOLE # 106
TOUCH AMERICA FO
1/4-INCH POLY-COATED GLASS STRANDS
DEPTH TO TOP = 11.667 FT
ELEVATION TOP = 4482.09
GROUND ELEVATION = 4493.76
QL A

UTILITY LOCATIONS ARE SHOWN FOR INFORMATION ONLY

Call before you Dig.

801-532-5000
UTILITY NOTIFICATION CENTER

| NO. | DATE | DESIGN REV.BY | MAPS CORR.BY | PARCELS AFFECTED | REQUEST BY | REMARKS |
|---|---|---|---|---|---|---|
| | | ORIGINAL SUBMISSION FOR AUTHORIZATION | | | | |

REVISIONS

UTAH DEPARTMENT OF TRANSPORTATION
SALT LAKE CITY, UTAH
STRUCTURES DIVISION

UMS, Inc.

DESIGN ____ CHECK ____ REVIEW
DRAWN BTA 12/04 CHECK PJM 12/04 DATE ____
QUANT. ____ CHECK ____ BY ____

APPROVAL RECOMM. ____ DATE ____ PROJECT DESIGN ENGINEER
APPROVED FOR USE BY UDOT ____ DATE ____ PRECONSTRUCTION ENGINEER

I-15 CORRIDOR UTAH COUNTY
UTILITIES
BRIDGE C-352
PROJECT NUMBER SP-15-6(52)241

UTAH COUNTY

SHEET NO. UT 9

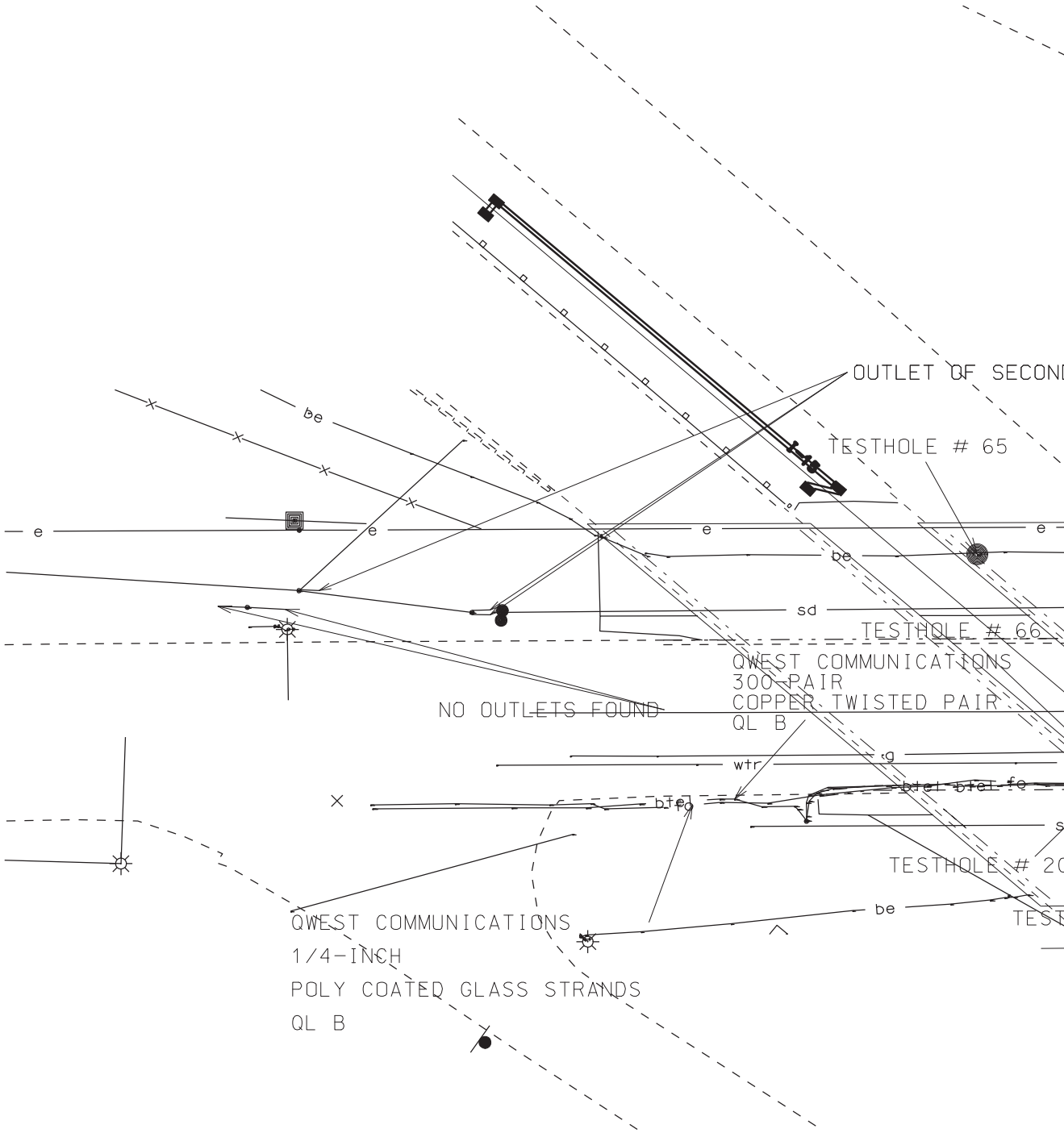


## TEST HOLE DATA

TESTHOLE # 22b
LINDON CITY
UNABLE TO LOCATE FACILITY
DEPTH TO TOP =
ELEVATION TOP =
GROUND ELEVATION = 4516.86
QL A

TESTHOLE # 66
LEHI
8-INCH
DEPTH TO TOP = 7.5 FT
ELEVATION TOP = 4508.98
GROUND ELEVATION = 4516.48
QL A

TESTHOLE # 21b
QWEST
5(4-INCH CONDUITS)
DEPTH TO TOP = 2.4 FT
ELEVATION TOP = 4514.68
GROUND ELEVATION = 4517.08
QL A

TESTHOLE # 21c
QWEST
400-PAIR DBC
DEPTH TO TOP = 2.4 FT
ELEVATION TOP = 4514.67
GROUND ELEVATION = 4517.07
QL A

TESTHOLE
Qwest Co
4-inch P
DEPTH TO
ELEVATIO
GROUND E
QL A

TESTHOLE
Qwest Co
4-inch P
DEPTH TO
ELEVATIO
GROUND E
QL A

DGN File:IP_PWP:dms11715\4433_UT10.dgn
02-MAY-2005

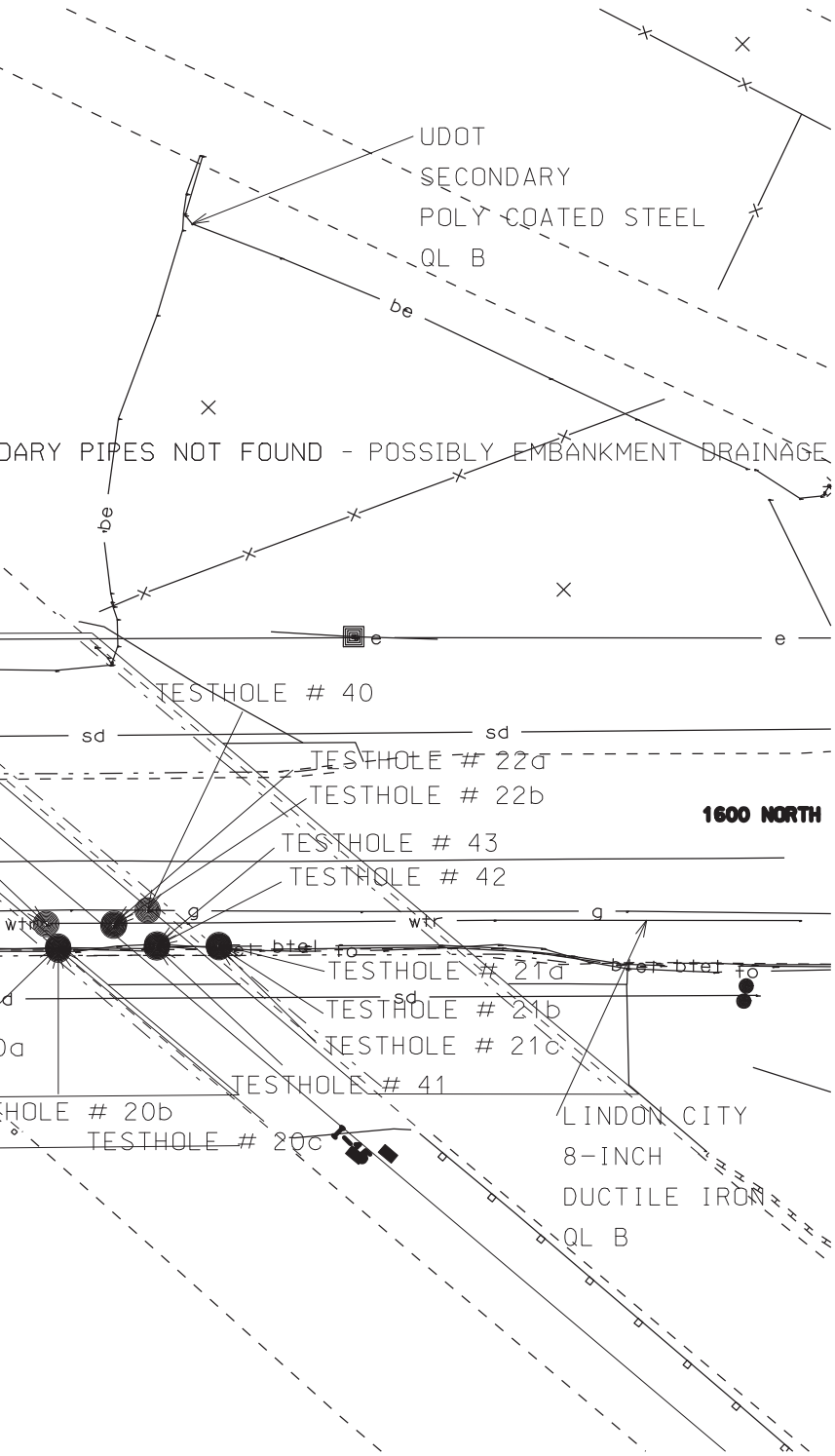


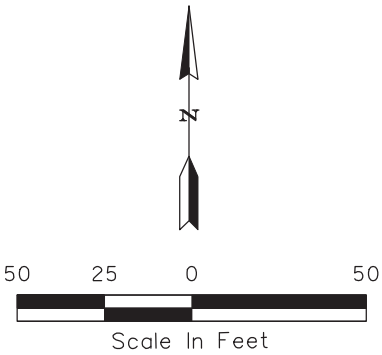


## TEST HOLE DATA

TESTHOLE # 65
UDOT
2-INCH
DEPTH TO TOP = 0.08 FT
ELEVATION TOP = 4521.96
GROUND ELEVATION = 4522.04
QL A

TESTHOLE # 40
Questar Gas
4-inch Tar Wrapped Steel
DEPTH TO TOP = 4.7 FT
ELEVATION TOP = 4512.50
GROUND ELEVATION = 4517.20
QL A

TESTHOLE # 22a
UNKNOWN OWNER
1.25-INCH STEEL
DEPTH TO TOP = 6.5 FT
ELEVATION TOP = 4510.39
GROUND ELEVATION = 4516.89
QL A

TESTHOLE # 20b
QWEST
4-INCH PVC
DEPTH TO TOP = 2 FT
ELEVATION TOP = 4514.37
GROUND ELEVATION = 4516.37
QL A

TESTHOLE # 20c
QWEST
400 PAIR DBC
DEPTH TO TOP = 2 FT
ELEVATION TOP = 4514.30
GROUND ELEVATION = 4516.30
QL A

TESTHOLE # 20a
QWEST
5(4-INCH CONDUITS)
DEPTH TO TOP = 20 FT
ELEVATION TOP = 4496.39
GROUND ELEVATION = 4516.39
QL A

E # 43
ommunications
PVC
O TOP = 2.2 FT
ON TOP = 4514.69
ELEVATION = 4516.89

# 42
ommunications
VC
TOP = 2.1 FT
N TOP = 4514.76
LEVATION = 4516.86

TESTHOLE # 41
Qwest Communications
1.25-inch
DEPTH TO TOP = 2.2 FT
ELEVATION TOP = 4514.64
GROUND ELEVATION = 4516.84
QL A

TESTHOLE # 21a
QWEST
5(4-INCH CONDUITS)
DEPTH TO TOP = 2.4 FT
ELEVATION TOP = 4514.70
GROUND ELEVATION = 4517.10
QL A

UTILITY LOCATIONS ARE SHOWN
FOR INFORMATION ONLY

Call
before you
Dig.

801-532-5000
UTILITY NOTIFICATION CENTER

| NO. | DATE | DESIGN REV.BY | MAPS CORR.BY | PARCELS AFFECTED | REQUEST BY | REMARKS |
|---|---|---|---|---|---|---|
| | | ORIGINAL SUBMISSION FOR AUTHORIZATION | | | | |

REVISIONS

UTAH DEPARTMENT OF TRANSPORTATION
SALT LAKE CITY, UTAH
STRUCTURES DIVISION

UMS, Inc.

REVIEW
DATE
BY

DESIGN
DRAWN BTA 12/04
QUANT.

CHECK
CHECK PJM 12/04
CHECK

APPROVAL RECOMM. DATE PROJECT DESIGN ENGINEER
APPROVED FOR USE BY UDOT DATE PRECONSTRUCTION ENGINEER

I-15 CORRIDOR UTAH COUNTY
UTILITIES
BRIDGE C-353
PROJECT NUMBER SP-15-6(52)241

UTAH
COUNTY

SHEET NO. UT 10

## TEST HOLE DATA

TESTHOLE # 26
Qwest Communications
2-inch PVC
DEPTH TO TOP = 3.19 FT
ELEVATION TOP = 4580.49
GROUND ELEVATION = 4583.68
QL A

TESTHOLE # 25
Qwest Communications
4-inch PVC
DEPTH TO TOP = 2.53 FT
ELEVATION TOP = 4581.16
GROUND ELEVATION = 4583.69
QL A

TESTHOLE # 80
GENEVA STEEL
24-INCH CONCRETE
DEPTH TO TOP = 4.1 F
ELEVATION TOP = 4584
GROUND ELEVATION = 4
QL A

TESTHOLE # 29
Qwest Communications
24-inch Concrete Cap
DEPTH TO TOP = 0.9 FT
ELEVATION TOP = 4581.61
GROUND ELEVATION = 4582.51
QL A

TESTHOLE # 27
Questar Gas
6-inch Tar Wrapped Steel
DEPTH TO TOP = 1.82 FT
ELEVATION TOP = 4580.60
GROUND ELEVATION = 4582.42
QL A

TESTHOLE # 28
Electric Lightwave
24-inch Concrete Cap
DEPTH TO TOP = 0.5 F
ELEVATION TOP = 4581
GROUND ELEVATION = 4
QL A

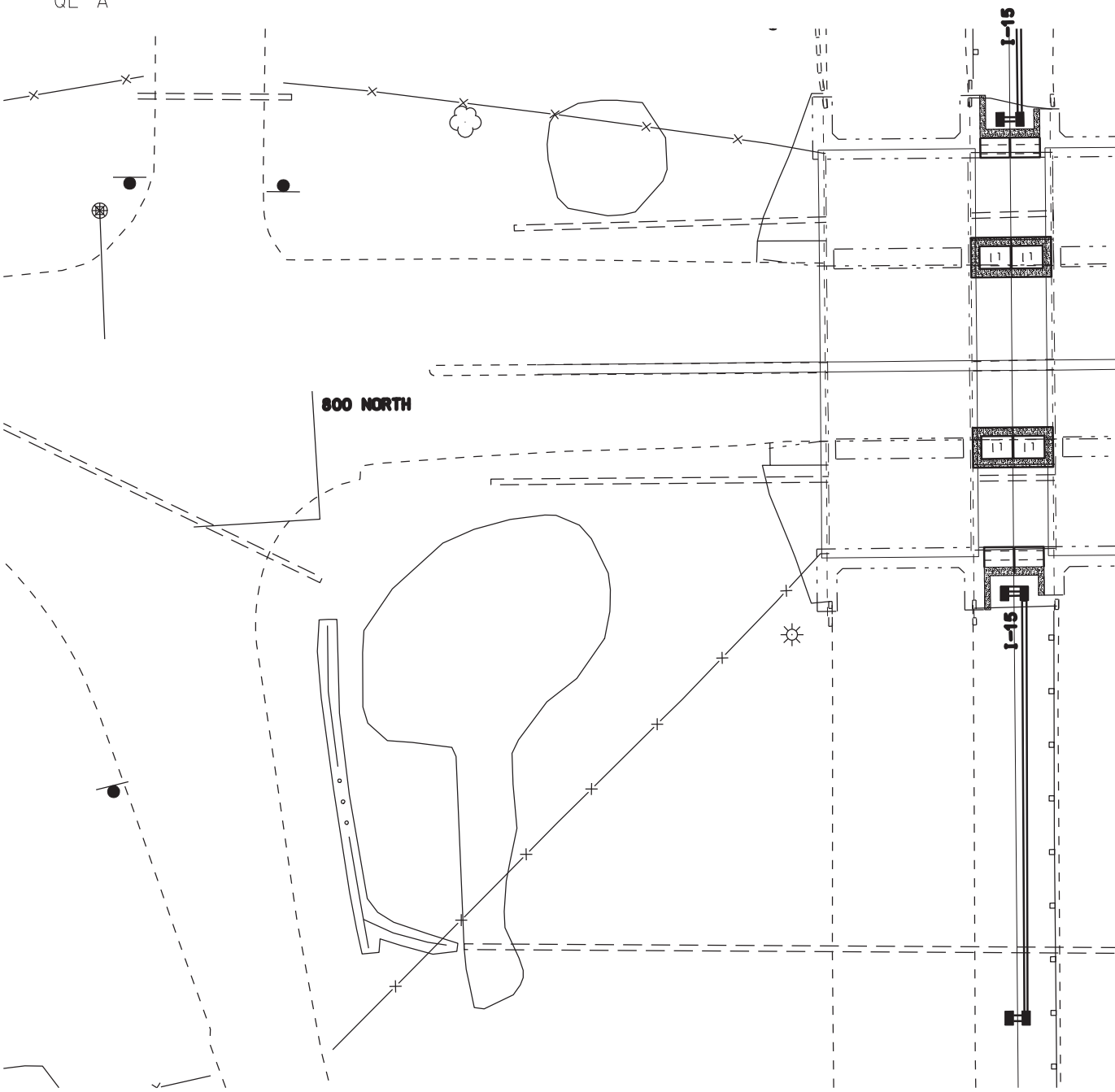


DGN File:IP_PWP:dms11715\44433_UT11.dgn

02-MAY-2005

TESTHOLE # 81
GENEVA STEEL
FAILED ATTEMPT TO LOCATE FACILITY
DEPTH TO TOP =
ELEVATION TOP =
GROUND ELEVATION = 4576.67
QL A

T
.72
588.82

TESTHOLE # 74
QWEST
4-INCH
DEPTH TO TOP = 2 FT
ELEVATION TOP = 4580.14
GROUND ELEVATION = 4582.14
QL A

P
FT
1.94
4582.44

N

50 25 0 50
Scale In Feet

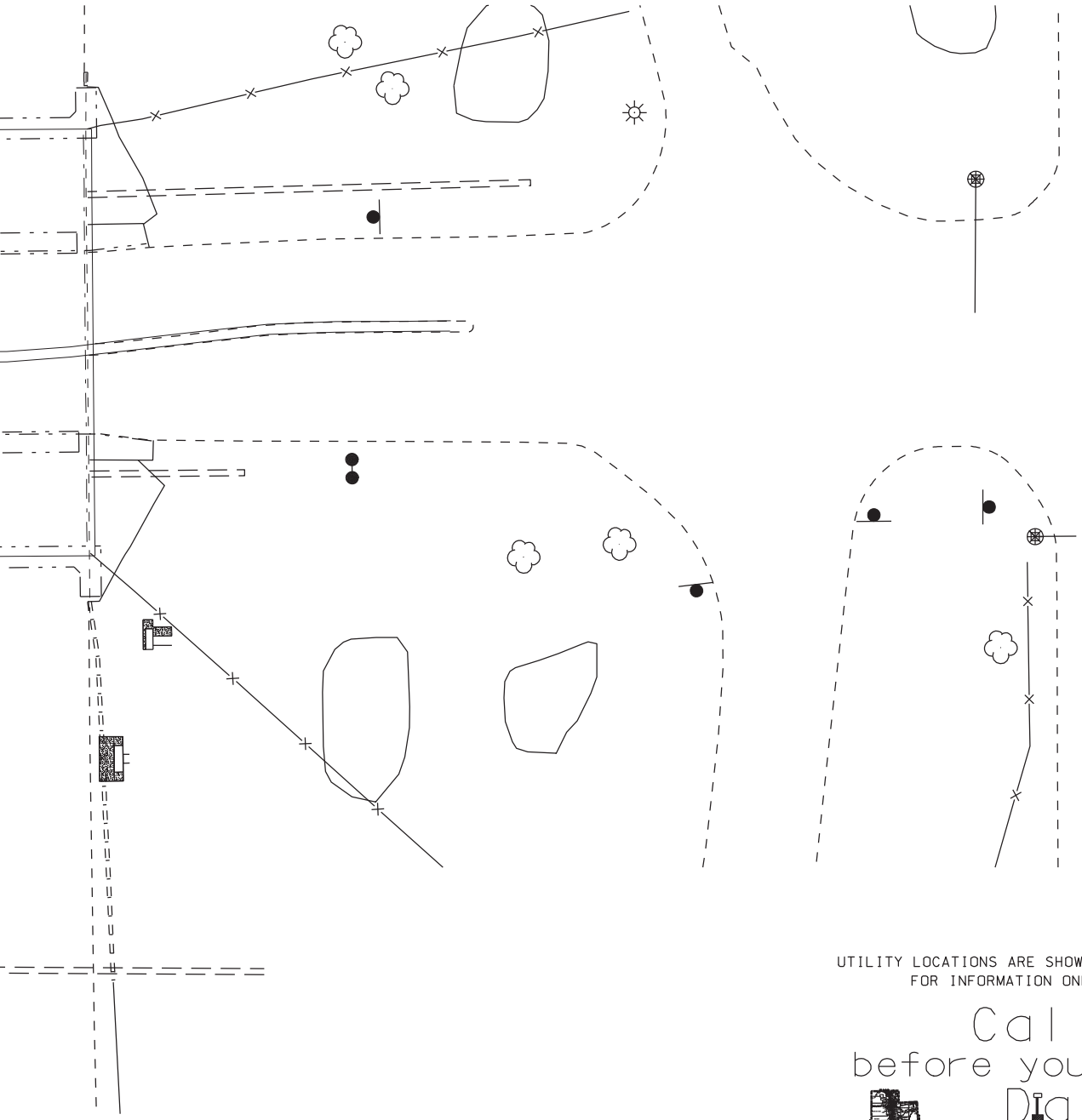

UTILITY LOCATIONS ARE SHOWN
FOR INFORMATION ONLY

Call
before you
Dig.

801-532-5000
UTILITY NOTIFICATION CENTER

| NO. | DATE | DESIGN REV.BY | MAPS CORR.BY | PARCELS AFFECTED | REQUEST BY | REMARKS |
|---|---|---|---|---|---|---|
| | | ORIGINAL SUBMISSION FOR AUTHORIZATION | | | | |

REVISIONS

UTAH DEPARTMENT OF TRANSPORTATION
SALT LAKE CITY, UTAH
STRUCTURES DIVISION

UMS, Inc.

REVIEW

DESIGN CHECK
DRAWN BTA 12/04 CHECK PJM 12/04 DATE
QUANT. CHECK BY

APPROVAL RECOMM. DATE PROJECT DESIGN ENGINEER
APPROVED FOR USE BY UDOT DATE PRECONSTRUCTION ENGINEER

I-15 CORRIDOR UTAH COUNTY
UTILITIES
BRIDGE F-13
PROJECT NUMBER SP-15-6(52)241

UTAH
COUNTY

SHEET NO. UT 11

## TEST HOLE DATA

TESTHOLE # 24
UDOT
1.5-inch Polyethylene
DEPTH TO TOP = 7.84 FT
ELEVATION TOP = 4546.00
GROUND ELEVATION = 4553.84
QL A

TESTHOLE # 22
Utah County
1.75-inch PVC
DEPTH TO TOP = 1.8 FT
ELEVATION TOP = 4550.08
GROUND ELEVATION = 4551.88
QL A

TESTHOLE # 23b
Qwest Communic
4-inch PVC
DEPTH TO TOP =
ELEVATION TOP
GROUND ELEVATI
QL A

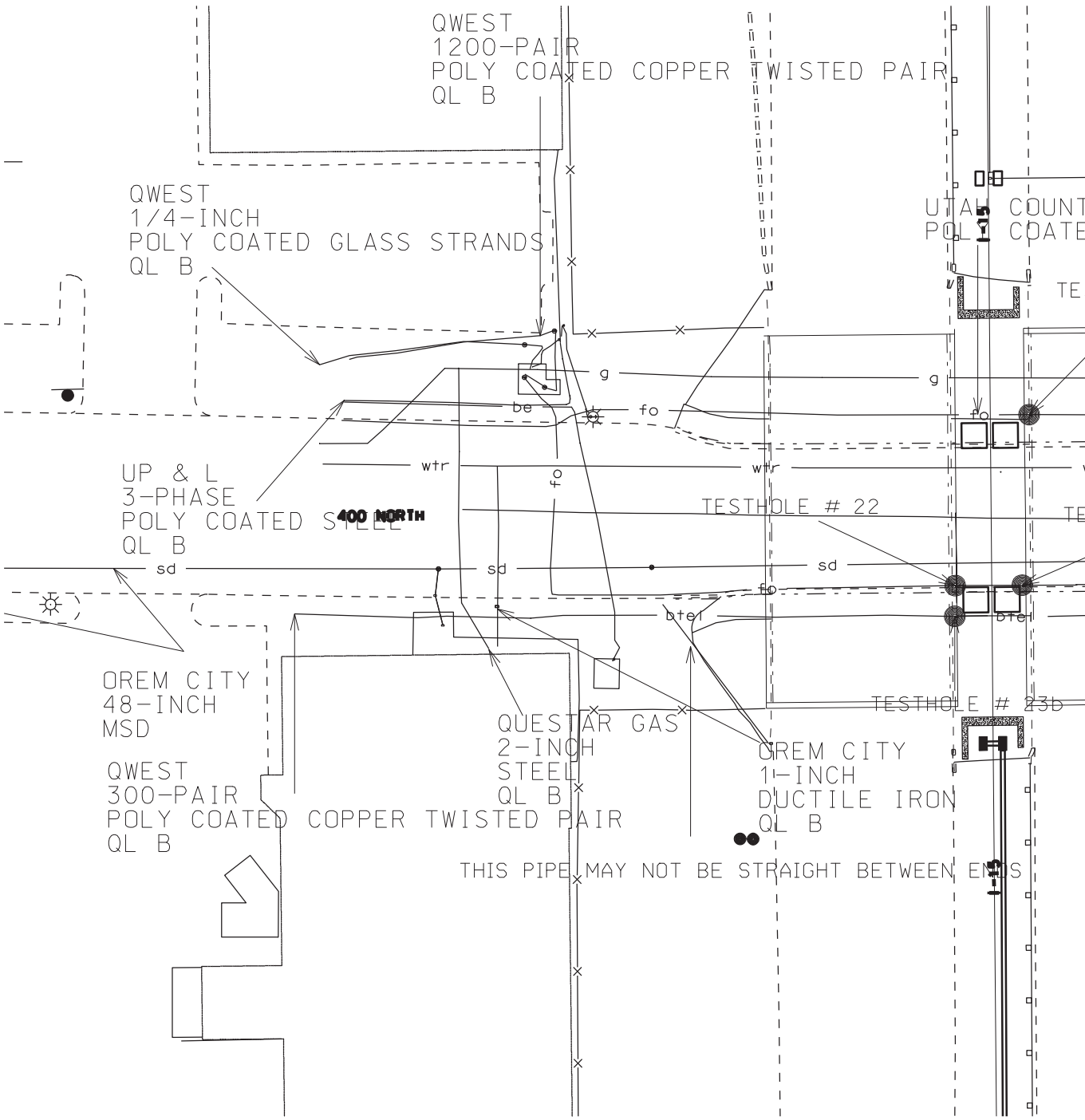


DGN File:IP_PWP:dms11715\4433_UT12.dgn

02-MAY-2005

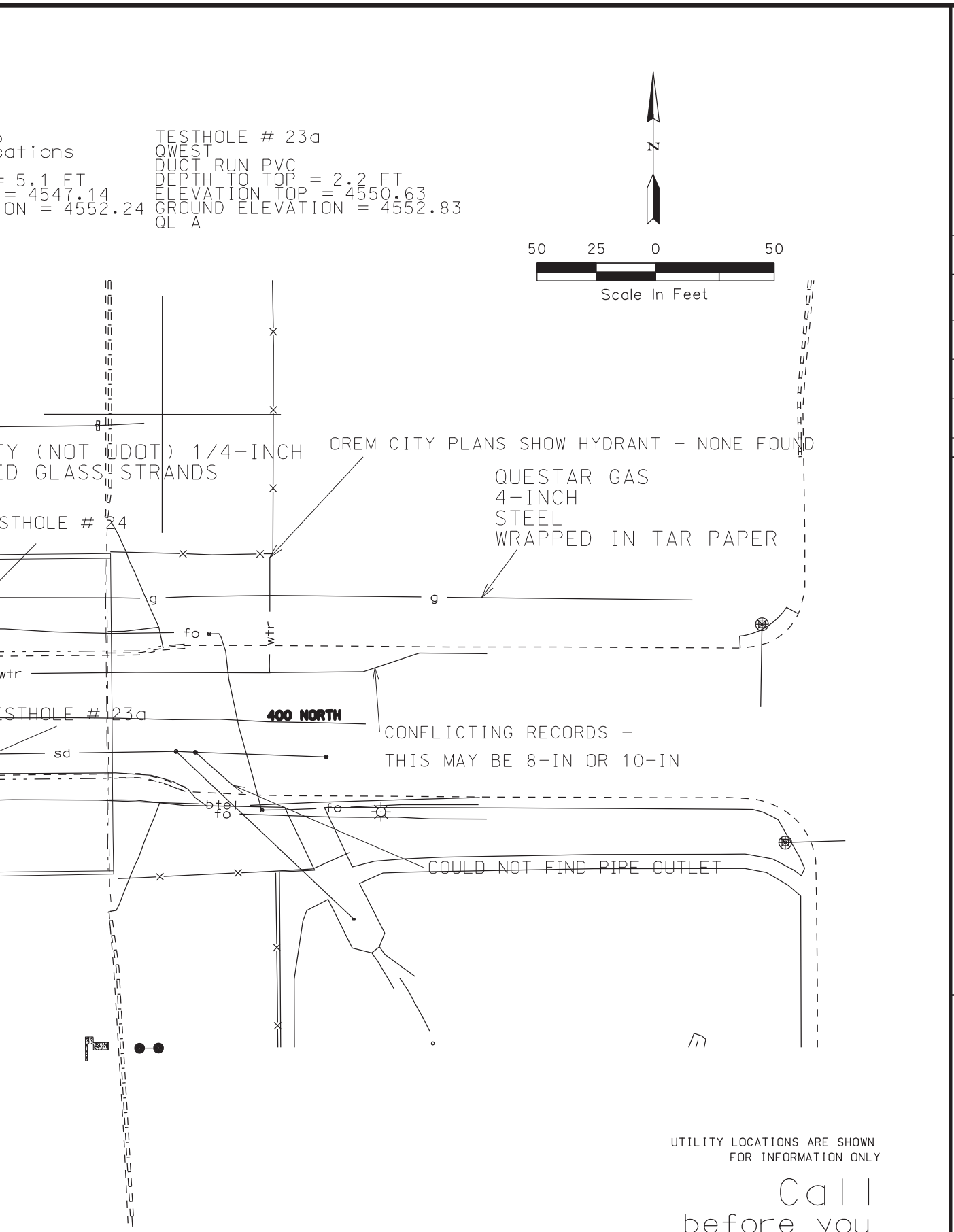


UTILITY LOCATIONS ARE SHOWN
FOR INFORMATION ONLY

Call
before you
Dig.

801-532-5000
UTILITY NOTIFICATION CENTER

| NO. | DATE | DESIGN REV.BY | MAPS CORR.BY | PARCELS AFFECTED | REQUEST BY | REMARKS |
|---|---|---|---|---|---|---|
| | | ORIGINAL SUBMISSION FOR AUTHORIZATION | | | | |

REVISIONS

UTAH DEPARTMENT OF TRANSPORTATION
SALT LAKE CITY, UTAH
STRUCTURES DIVISION

UMS, Inc.

REVIEW

DESIGN ____ CHECK ____ DATE ____
DRAWN BTA 12/04 CHECK PJM 12/04 BY ____
QUANT. ____ CHECK ____

APPROVAL RECOMM. ____ DATE ____ PROJECT DESIGN ENGINEER
APPROVED FOR USE BY UDOT ____ DATE ____ PRECONSTRUCTION ENGINEER

I-15 CORRIDOR UTAH COUNTY

UTILITIES

BRIDGE F-14

PROJECT NUMBER SP-15-6(52)241

UTAH
COUNTY

SHEET NO. UT 12

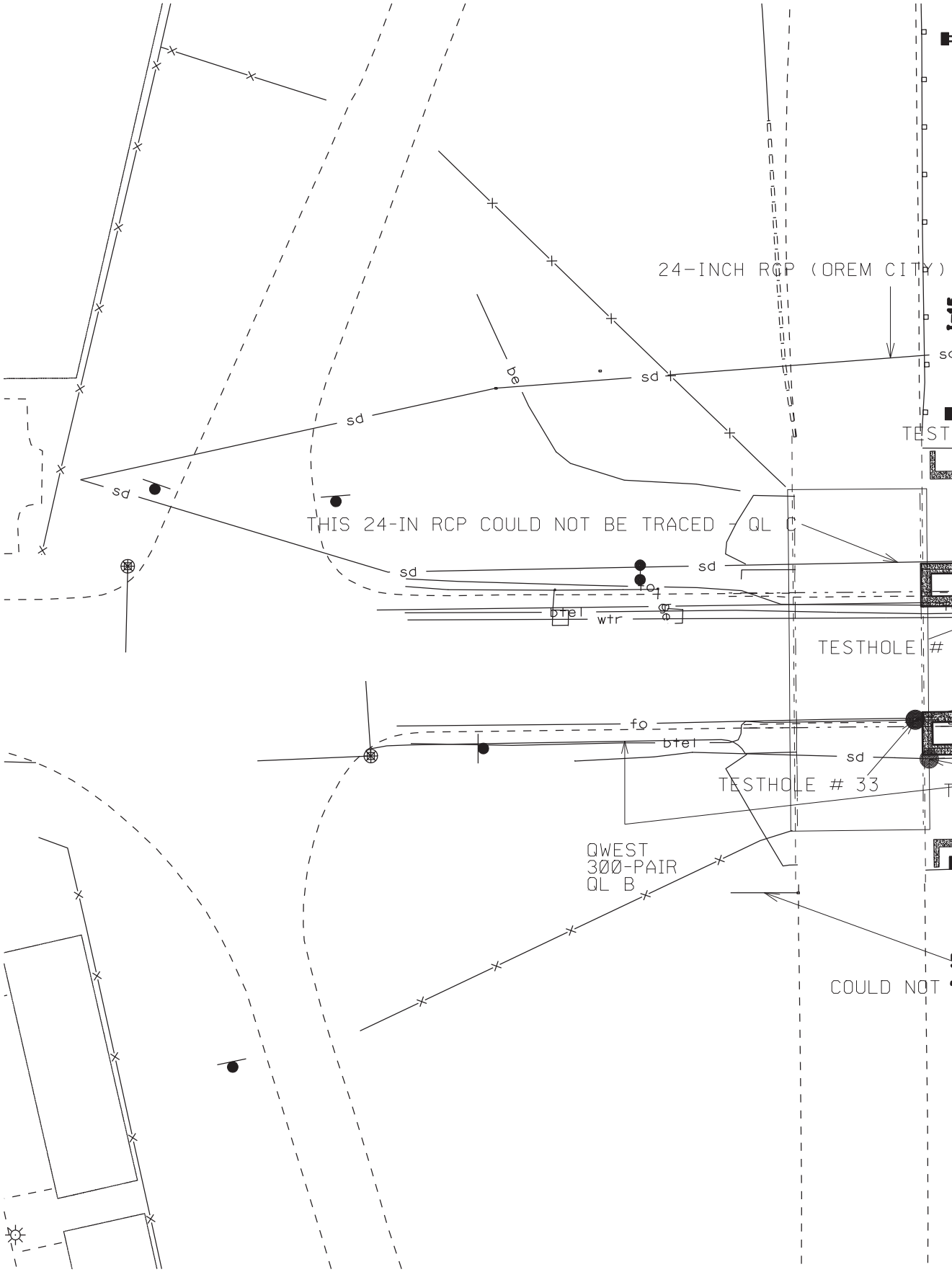


DGN File:IP_PWP:dms11715\4433_UT13.dgn

02-MAY-2005

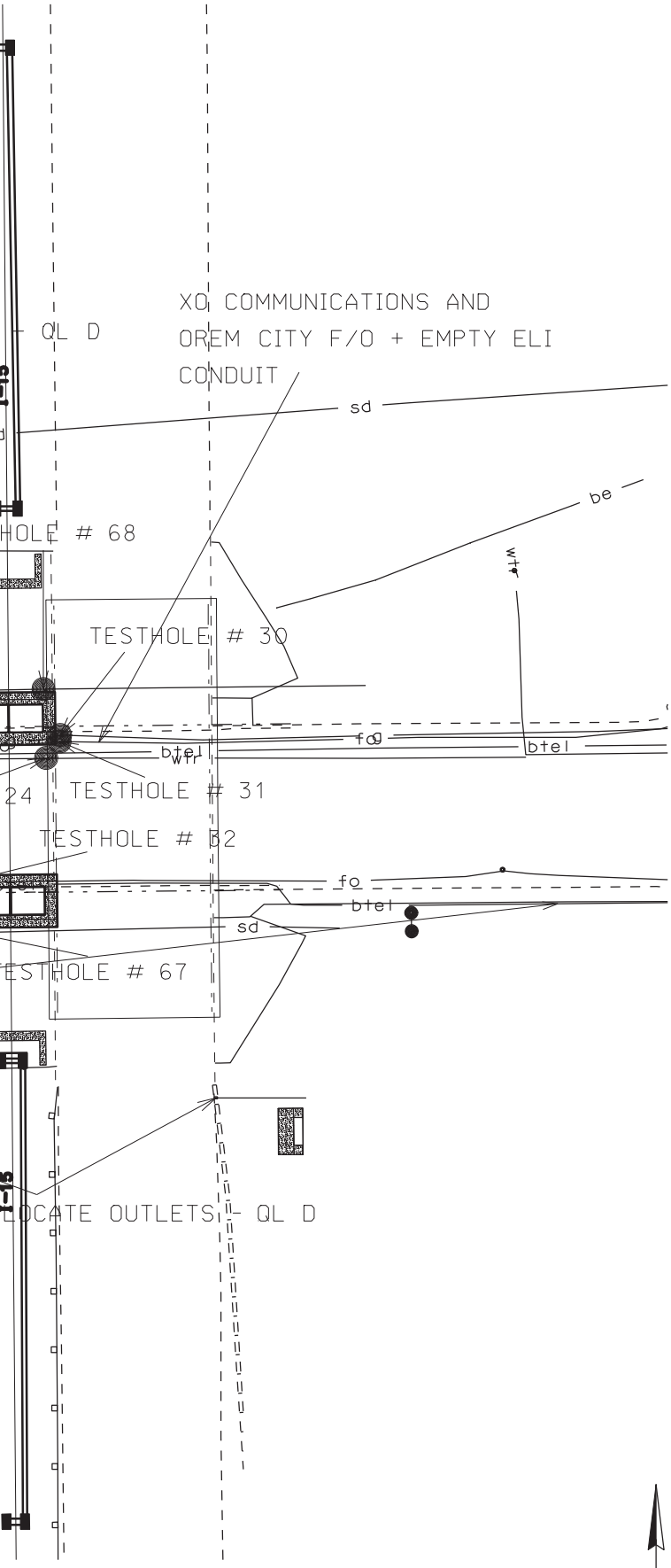


## TEST HOLE DATA

TESTHOLE # 31
Electric Lightwave
24-inch Concrete Cap
DEPTH TO TOP = 0.4 FT
ELEVATION TOP = 4540.53
GROUND ELEVATION = 4540.93
QL A

TESTHOLE # 30
Questar Gas
8-inch Tar Wrapped Steel
DEPTH TO TOP = 2.54 FT
ELEVATION TOP = 4538.37
GROUND ELEVATION = 4540.91
QL A

TESTHOLE # 67
LEHI
36-INCH
DEPTH TO TOP = 2.83 FT
ELEVATION TOP = 4539.96
GROUND ELEVATION = 4542.79
QL A

TESTHOLE # 33
Qwest Communications
300-PAIR
DEPTH TO TOP = 2.77 FT
ELEVATION TOP = 4537.08
GROUND ELEVATION = 4539.85
QL A

TESTHOLE # 68
LEHI
36-INCH
DEPTH TO TOP = 3.3 FT
ELEVATION TOP = 4539.62
GROUND ELEVATION = 4542.92
QL A

TESTHOLE # 24
OREM
12-INCH CAST IRON
DEPTH TO TOP = 6.7 FT
ELEVATION TOP = 4534.50
GROUND ELEVATION = 4541.20
QL A

TESTHOLE # 32
Qwest Communications
24-inch Concrete Cap
DEPTH TO TOP = 2.54 FT
ELEVATION TOP = 4537.34
GROUND ELEVATION = 4539.88
QL A

50 25 0 50
Scale In Feet

N

UTILITY LOCATIONS ARE SHOWN
FOR INFORMATION ONLY

Call
before you
Dig.

801-532-5000
UTILITY NOTIFICATION CENTER

| NO. | DATE | DESIGN REV.BY | MAPS CORR.BY | PARCELS AFFECTED | REQUEST BY | REMARKS |
|---|---|---|---|---|---|---|
| | | | | | | ORIGINAL SUBMISSION FOR AUTHORIZATION |

REVISIONS

UTAH DEPARTMENT OF TRANSPORTATION
SALT LAKE CITY, UTAH
STRUCTURES DIVISION

UMS, Inc.

REVIEW
CHECK
CHECK PJM 12/04
DATE
BY

DESIGN
DRAWN BTA 12/04
QUANT.

APPROVAL RECOMM. DATE PROJECT DESIGN ENGINEER
APPROVED FOR USE BY UDOT DATE PRECONSTRUCTION ENGINEER

I-15 CORRIDOR UTAH COUNTY
UTILITIES
BRIDGE F-15
PROJECT NUMBER SP-15-6(52)241

UTAH
COUNTY

SHEET NO. UT 13

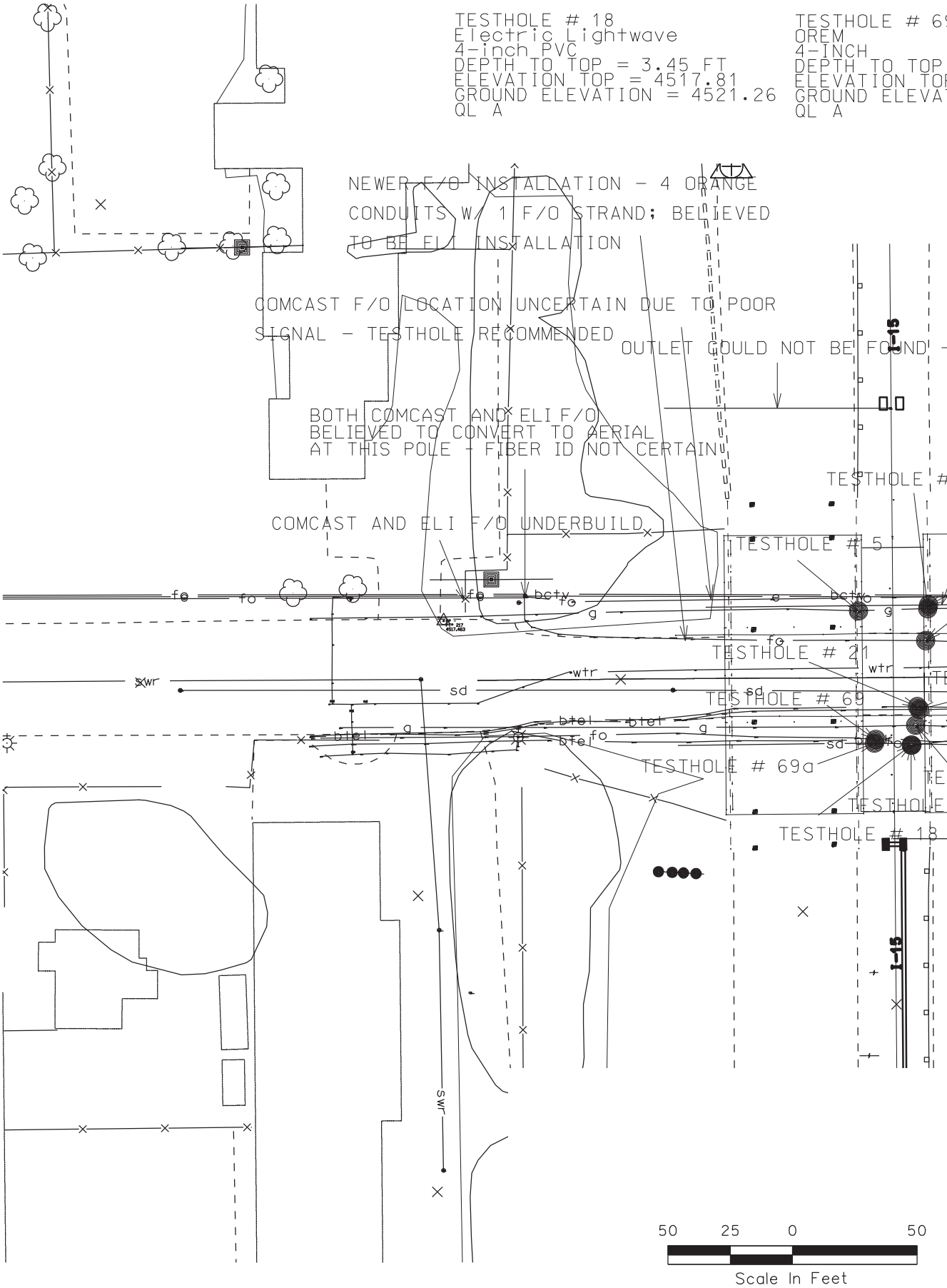


DGN File:IP_PWP:dms11715\44433_UT14.dgn

02-MAY-2005

9

= 2.9 FT
P = 4518.23
TION = 4521.13

TESTHOLE # 5
Questar
6-Inch Steel
DEPTH TO TOP = 2.9 FT
ELEVATION TOP = 4517.70
GROUND ELEVATION = 4520.60
QL A

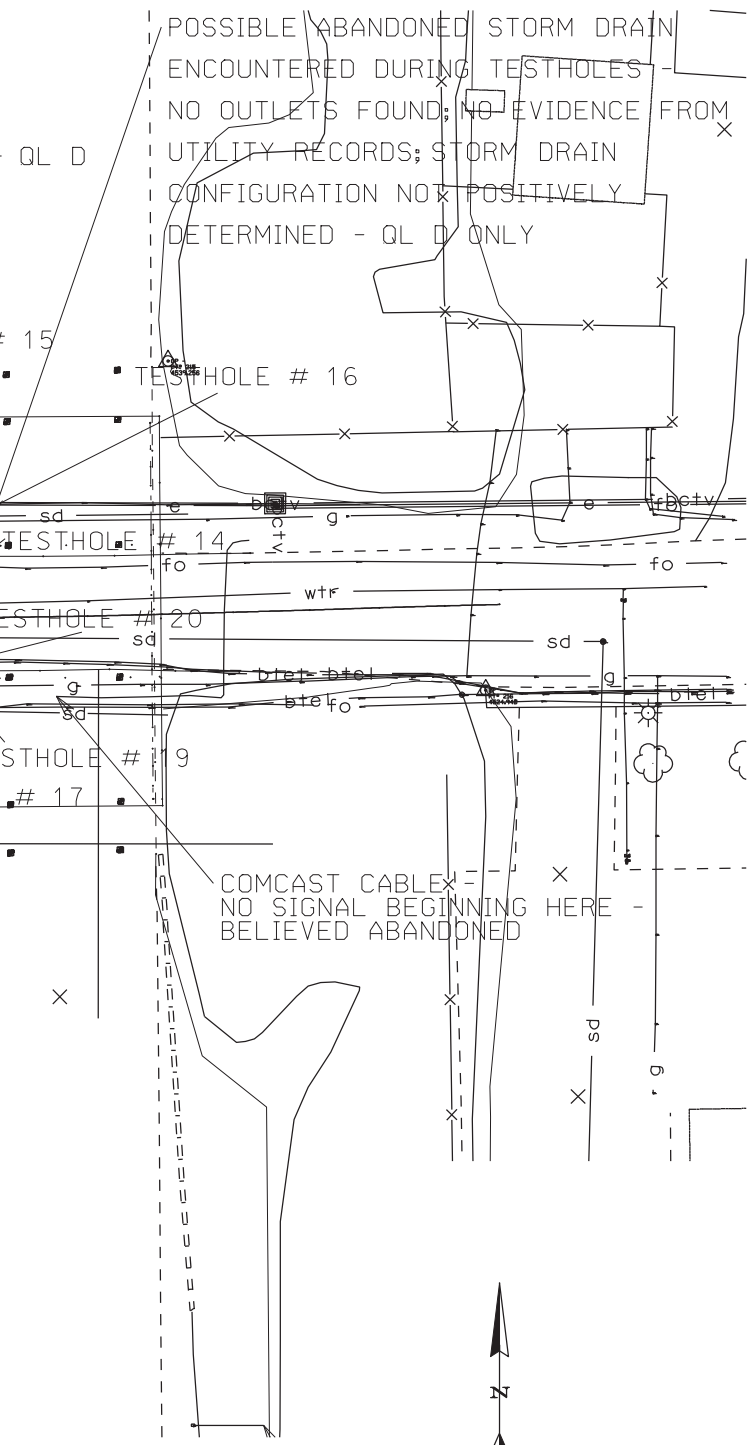


## TEST HOLE DATA

TESTHOLE # 16
UDOT
12-inch Corrugated Metal
DEPTH TO TOP = 3.3 FT
ELEVATION TOP = 4518.26
GROUND ELEVATION = 4521.56
QL A

TESTHOLE # 20
Qwest Communications
1.5-inch Poly
400 Coated Copper Twisted Pair
DEPTH TO TOP = 2.77 FT
ELEVATION TOP = 4516.85
GROUND ELEVATION = 4519.62
QL A

TESTHOLE # 69a
OREM
36-INCH
DEPTH TO TOP = 3.7 FT
ELEVATION TOP = 4518.04
GROUND ELEVATION = 4521.74
QL A

TESTHOLE # 17
UDOT
12-inch Corrugated Metal
DEPTH TO TOP = 3.98 FT
ELEVATION TOP = 4517.83
GROUND ELEVATION = 4521.81
QL A

TESTHOLE # 19
Questar Gas
4-inch Tar Wrapped Steel
DEPTH TO TOP = 3.2 FT
ELEVATION TOP = 4516.76
GROUND ELEVATION = 4519.96
QL A

TESTHOLE # 21
Qwest Communications
FAILED ATTEMPT TO LOCATE FACILITY
DEPTH TO TOP =
ELEVATION TOP =
GROUND ELEVATION = 4519.60

TESTHOLE # 14
Comcast Communications
2-inch PVC
DEPTH TO TOP = 4.89 FT
ELEVATION TOP = 4514.89
GROUND ELEVATION = 4519.78
QL A

TESTHOLE # 15
Questar Gas
6-inch High Pressure Steel
DEPTH TO TOP = 3.15 FT
ELEVATION TOP = 4518.17
GROUND ELEVATION = 4521.32

QL A

UTILITY LOCATIONS ARE SHOWN
FOR INFORMATION ONLY

Call
before you
Dig.

801-532-5000
UTILITY NOTIFICATION CENTER

| NO. | DATE | DESIGN REV.BY | MAPS CORR.BY | PARCELS AFFECTED | REQUEST BY | REMARKS |
|---|---|---|---|---|---|---|
| | | ORIGINAL SUBMISSION FOR AUTHORIZATION | | | | |

REVISIONS

UTAH DEPARTMENT OF TRANSPORTATION
SALT LAKE CITY, UTAH
STRUCTURES DIVISION

UMS, Inc.

REVIEW
DATE
BY

DESIGN
CHECK
DRAWN BTA 12/04
CHECK PJM 12/04
QUANT.
CHECK

APPROVAL RECOMM. DATE PROJECT DESIGN ENGINEER
APPROVED FOR USE BY UDOT DATE PRECONSTRUCTION ENGINEER

I-15 CORRIDOR UTAH COUNTY
UTILITIES
BRIDGE F-16
PROJECT NUMBER SP-15-6(52)241

UTAH
COUNTY

SHEET NO. UT 14

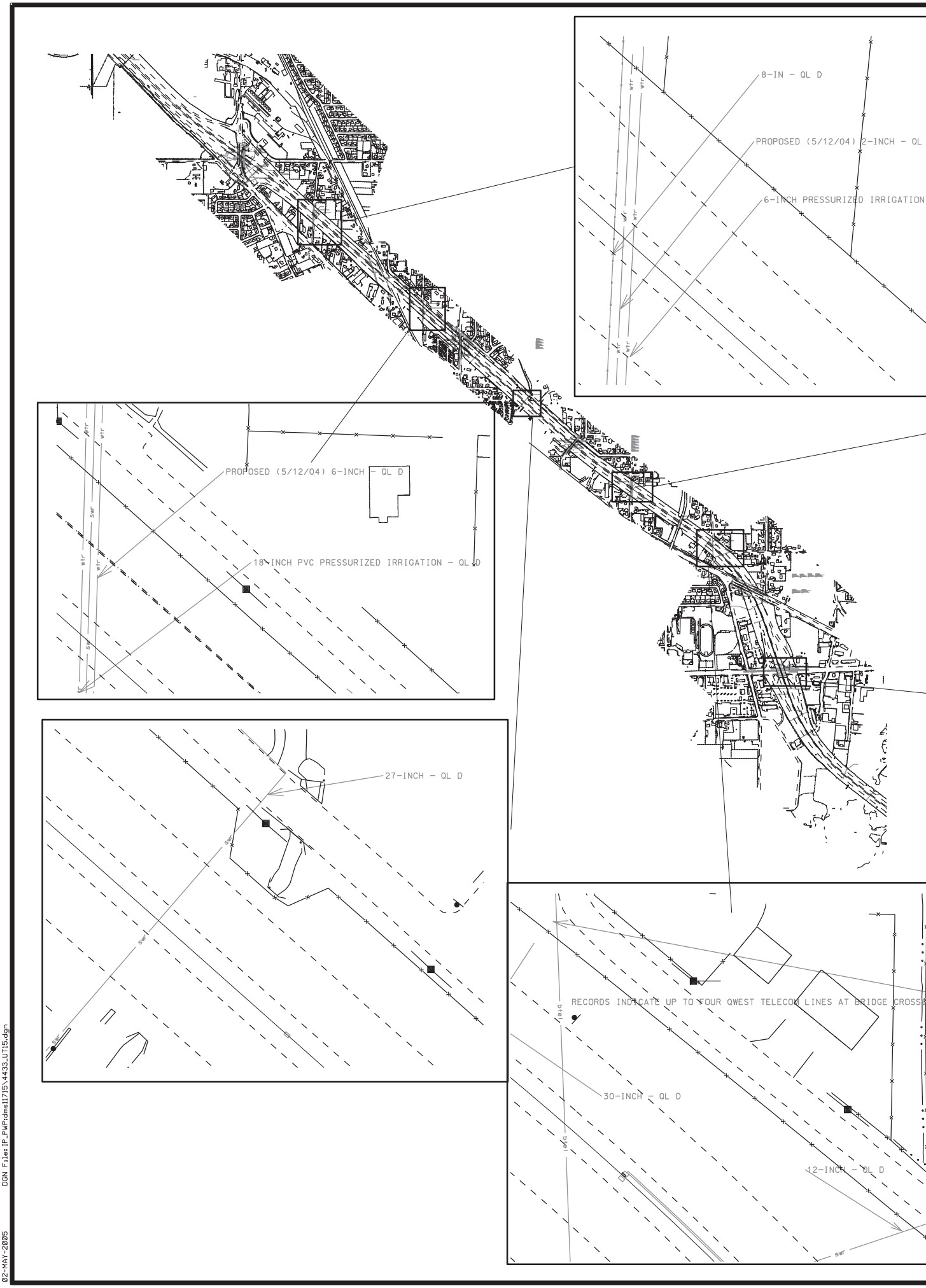


DGN File:IP_PWPtdms11715\4433.UT15.dgn

02-MAY-2005

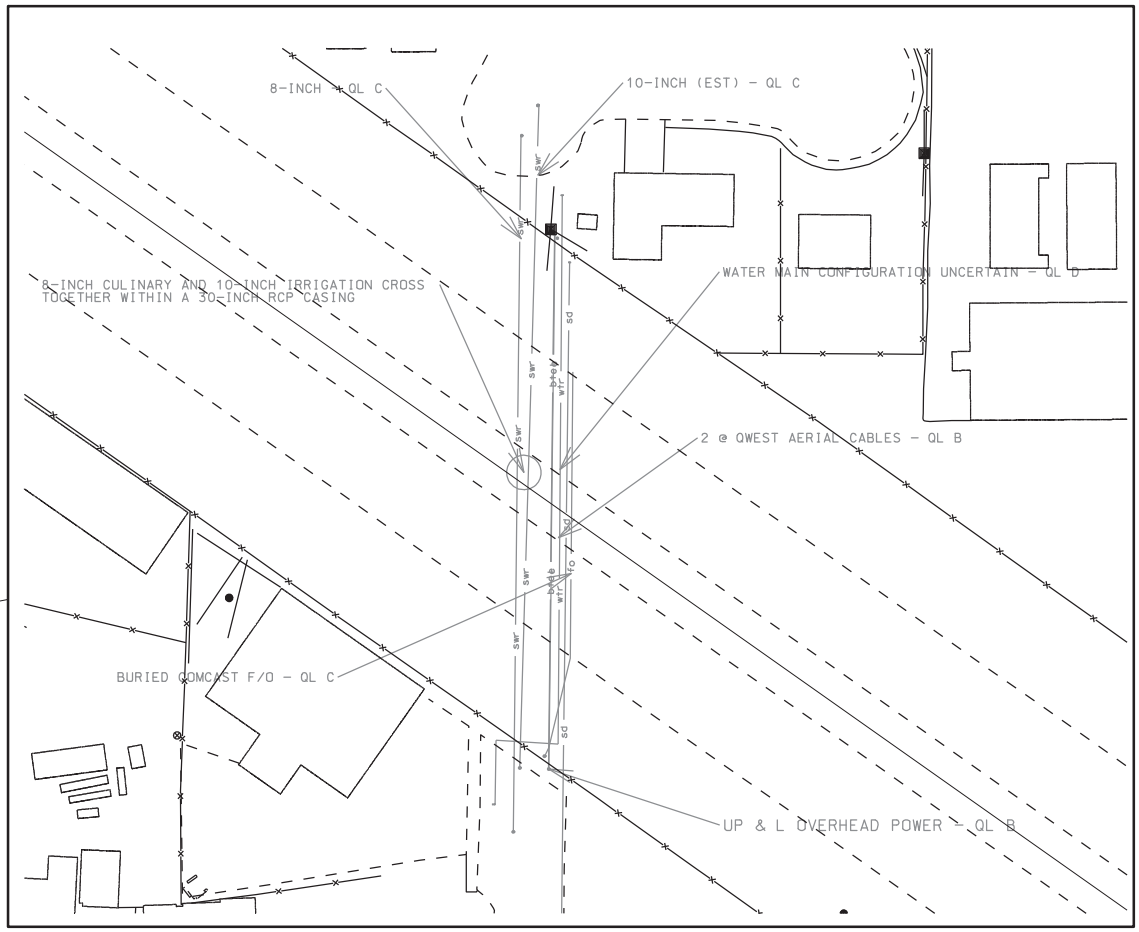


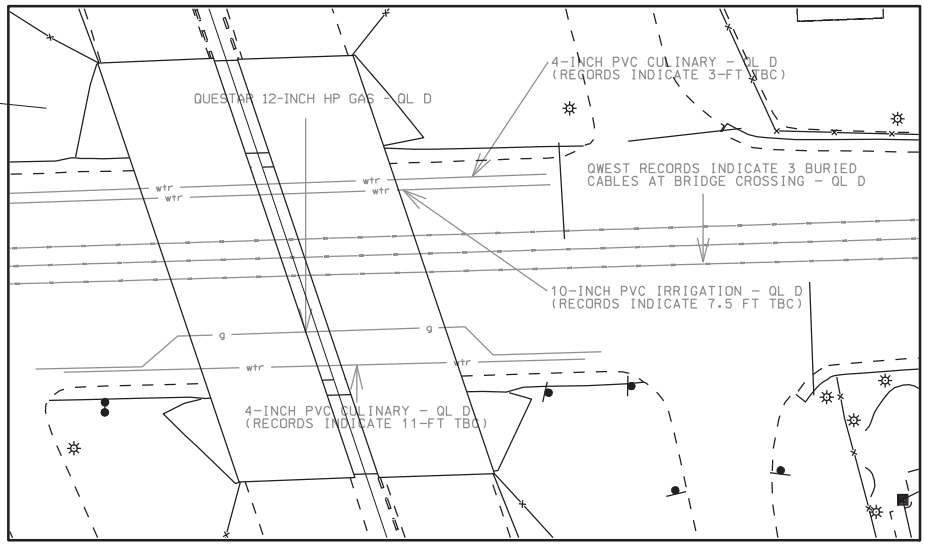


UTILITY LOCATIONS ARE SHOWN
FOR INFORMATION ONLY

N

Call
before you
Dig.®

801-532-5000
UTILITY NOTIFICATION CENTER

| NO. | DATE | DESIGN REV.BY | MAPS CORR.BY | PARCELS AFFECTED | REQUEST BY | REMARKS |
|---|---|---|---|---|---|---|
| | | ORIGINAL SUBMISSION FOR AUTHORIZATION | | | | |
| | DATE | REVISIONS | | | | |

UTAH DEPARTMENT OF TRANSPORTATION
SALT LAKE CITY, UTAH
STRUCTURES DIVISION

UMS, Inc.

APPROVAL RECOMM. DATE PROJECT DESIGN ENGINEER
APPROVED FOR USE BY UDOT DATE PRECONSTRUCTION ENGINEER

DESIGN CHECK REVIEW
DRAWN BTA 12/04 CHECK PJM 12/04 DATE
QUANT. CHECK BY

I-15 CORRIDOR UTAH COUNTY
UTILITIES
MEDIAN SEGMENT 1
PROJECT NUMBER SP-15-6(52)241

UTAH
COUNTY

SHEET NO. UT 15

02-MAY-2005 DGN File:IP_PWPtdmsil7715\4433.UT16.dgn

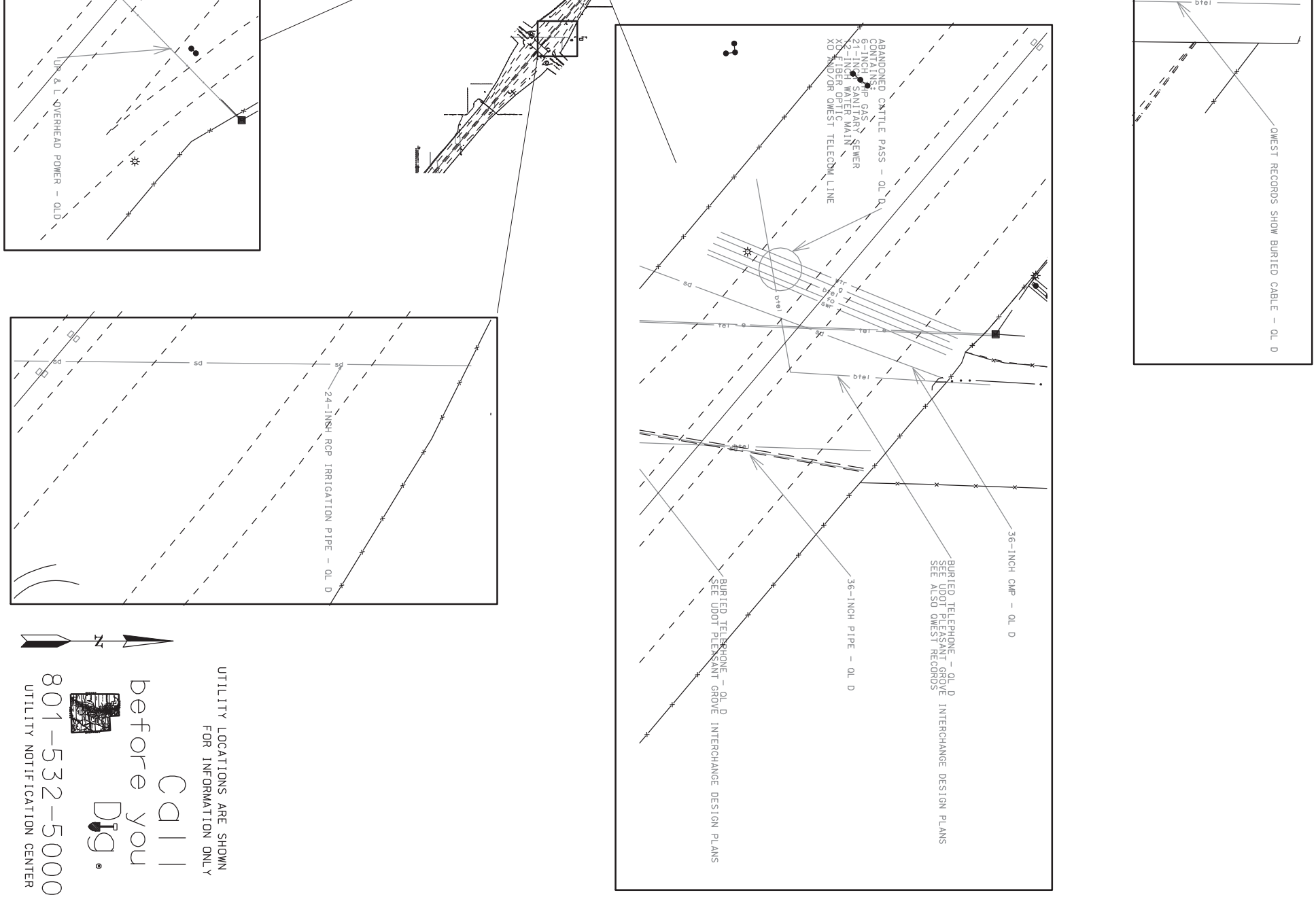


UTILITY LOCATIONS ARE SHOWN
FOR INFORMATION ONLY

Call before you Dig.®
801-532-5000
UTILITY NOTIFICATION CENTER

| | | | | | |
|---|---|---|---|---|---|
| I-15 CORRIDOR UTAH COUNTY | UTAH DEPARTMENT OF TRANSPORTATION<br>SALT LAKE CITY, UTAH<br>STRUCTURES DIVISION | | | | |
| UTILITIES | UMS, Inc. | | | | |
| MEDIAN SEGMENT 2 | APPROVAL RECOMM. ____ DATE ____ PROJECT DESIGN ENGINEER | DESIGN ____ | CHECK ____ | REVIEW | |
| | | DRAWN BTA 12/04 | CHECK PJM 12/04 | DATE ____ | |
| PROJECT NUMBER SP-15-6(52)241 | APPROVED FOR USE BY UDOT ____ DATE ____ PRECONSTRUCTION ENGINEER | QUANT. ____ | CHECK ____ | BY ____ | |

| NO. | DATE | DESIGN REV.BY | MAPS CORR.BY | PARCELS AFFECTED | REQUEST BY | REMARKS |
|---|---|---|---|---|---|---|
| | | ORIGINAL SUBMISSION FOR AUTHORIZATION | | | | |

DATE REVISIONS

UTAH COUNTY

SHEET NO. UT 16

DGN File:IP_PWP:dms11715\4433.UT17.dgn

02-MAY-2005

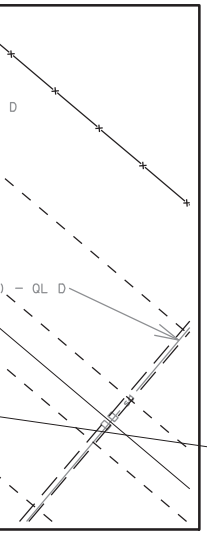


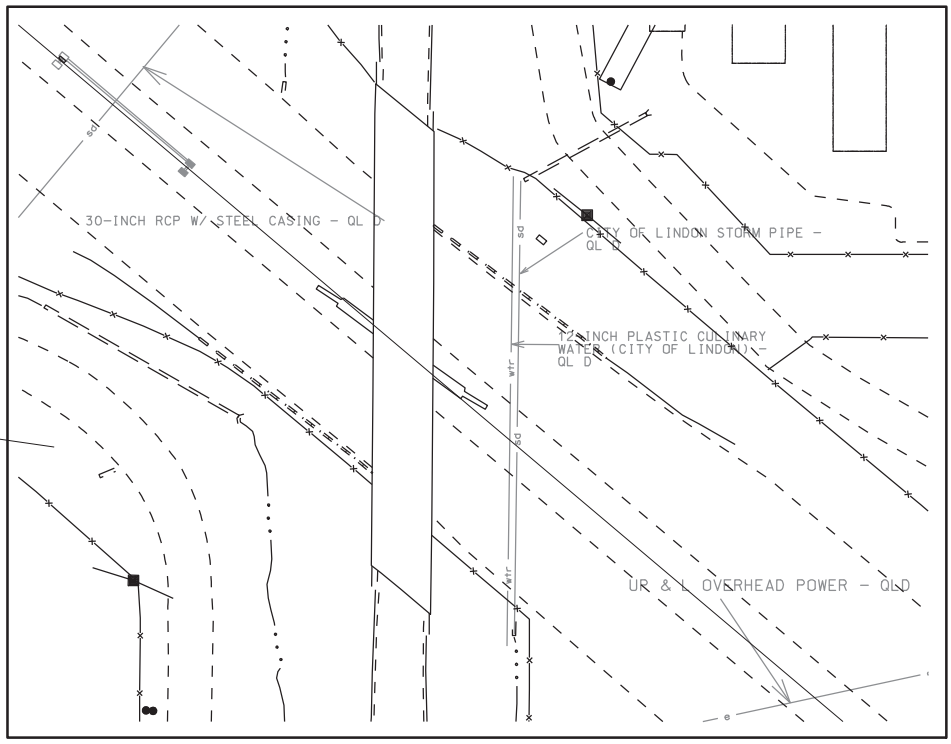


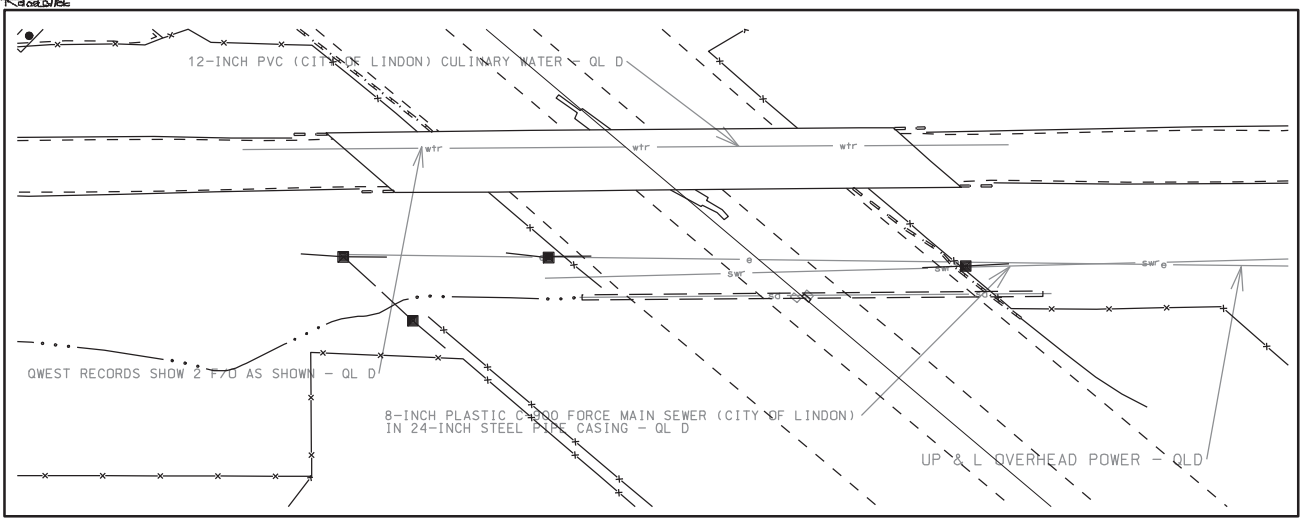


UTILITY LOCATIONS ARE SHOWN FOR INFORMATION ONLY

Call before you Dig.®

801-532-5000

UTILITY NOTIFICATION CENTER

N

| NO. | DATE | DESIGN REV.BY | MAPS CORR.BY | PARCELS AFFECTED | REQUEST BY | REMARKS |
|---|---|---|---|---|---|---|
| | | ORIGINAL SUBMISSION FOR AUTHORIZATION | | | | |
| | DATE | REVISIONS | | | | |

UTAH DEPARTMENT OF TRANSPORTATION
SALT LAKE CITY, UTAH
STRUCTURES DIVISION

UMS, Inc.

APPROVAL RECOMM. DATE PROJECT DESIGN ENGINEER

APPROVED FOR USE BY UDOT DATE PRECONSTRUCTION ENGINEER

DESIGN CHECK REVIEW

DRAWN BTA 12/04 CHECK PJM 12/04 DATE

QUANT. CHECK BY

I-15 CORRIDOR UTAH COUNTY

UTILITIES

MEDIAN SEGMENT 3

PROJECT NUMBER SP-15-6(52)241

UTAH COUNTY

SHEET NO. UT 17

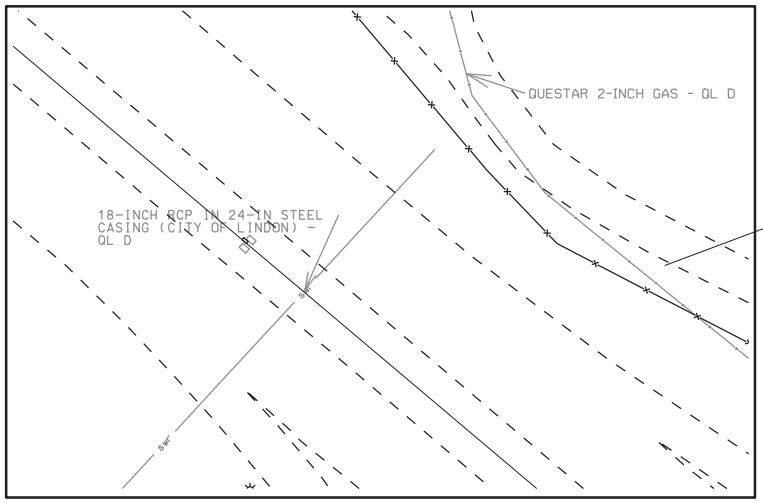


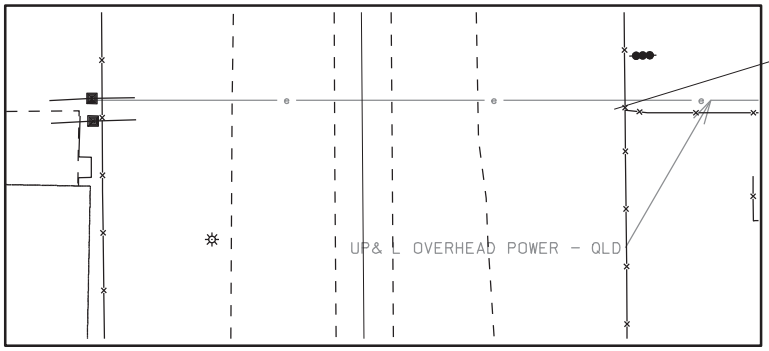


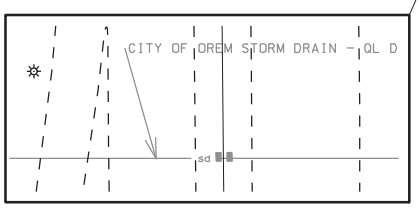


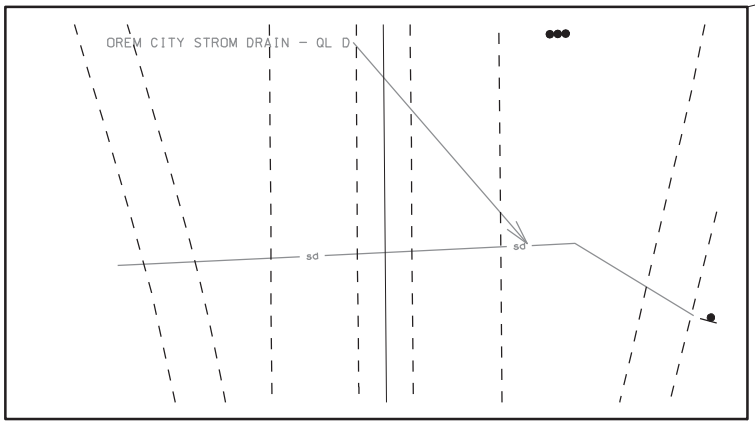


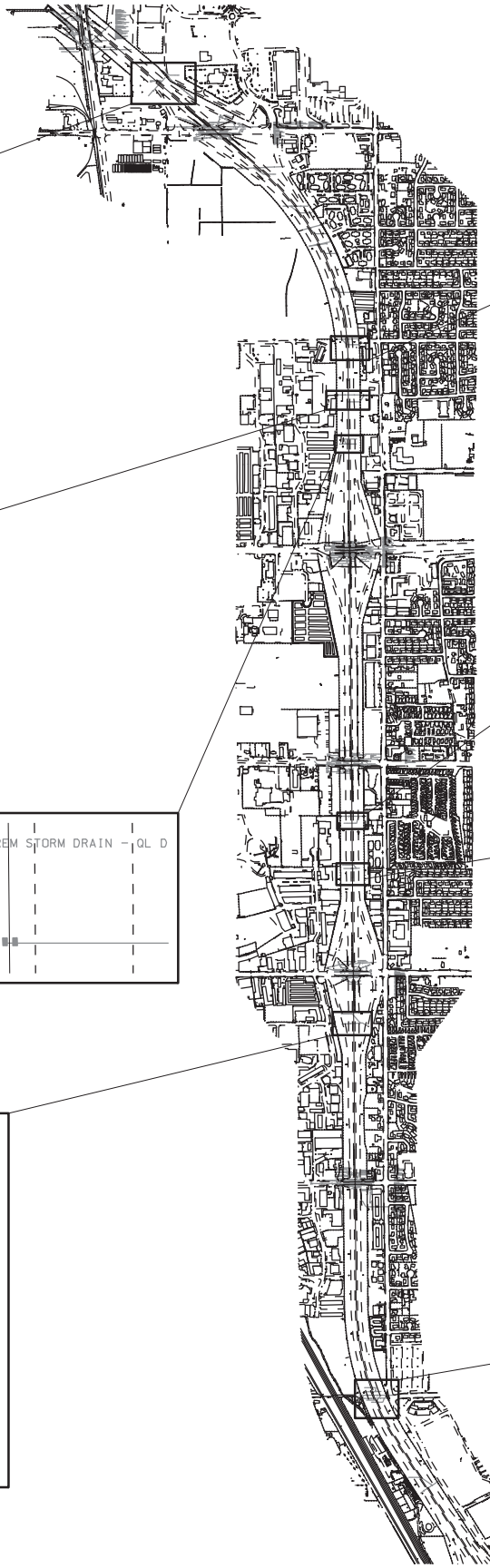

DGN File:IP_PWP:dms11715\4433.UT18.dgn

02-MAY-2005

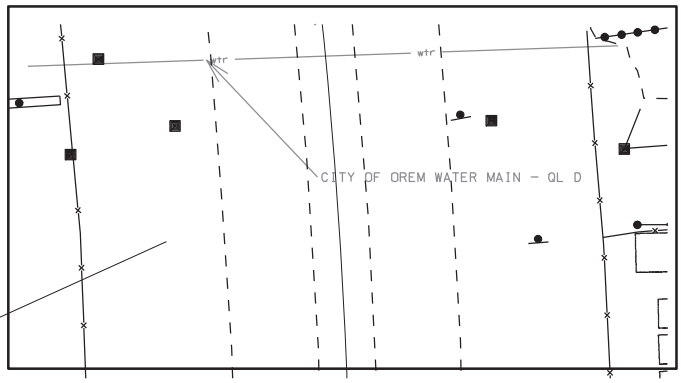


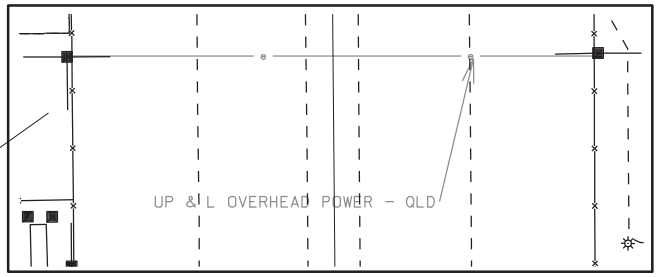


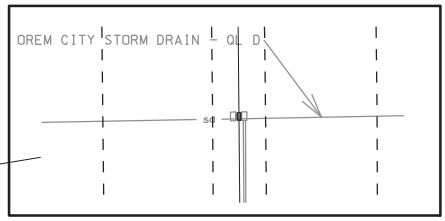


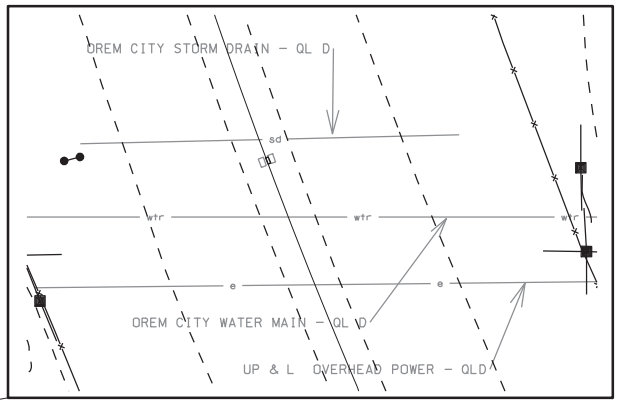


UTILITY LOCATIONS ARE SHOWN
FOR INFORMATION ONLY

N

Call
before you
Dig.®

801-532-5000
UTILITY NOTIFICATION CENTER

| NO. | DATE | DESIGN REV.BY | MAPS CORR.BY | PARCELS AFFECTED | REQUEST BY | REMARKS |
|---|---|---|---|---|---|---|
| | | ORIGINAL SUBMISSION FOR AUTHORIZATION | | | | |

DATE REVISIONS

UTAH DEPARTMENT OF TRANSPORTATION
SALT LAKE CITY, UTAH
STRUCTURES DIVISION

UMS, Inc.

APPROVAL RECOMM. DATE PROJECT DESIGN ENGINEER
APPROVED FOR USE BY UDOT DATE PRECONSTRUCTION ENGINEER

DESIGN CHECK
DRAWN BTA 12/04 CHECK PJM 12/04
QUANT. CHECK

REVIEW
DATE
BY

I-15 CORRIDOR UTAH COUNTY

UTILITIES

MEDIAN SEGMENT 4

PROJECT NUMBER SP-15-6(52)241

UTAH
COUNTY

SHEET NO. UT 18

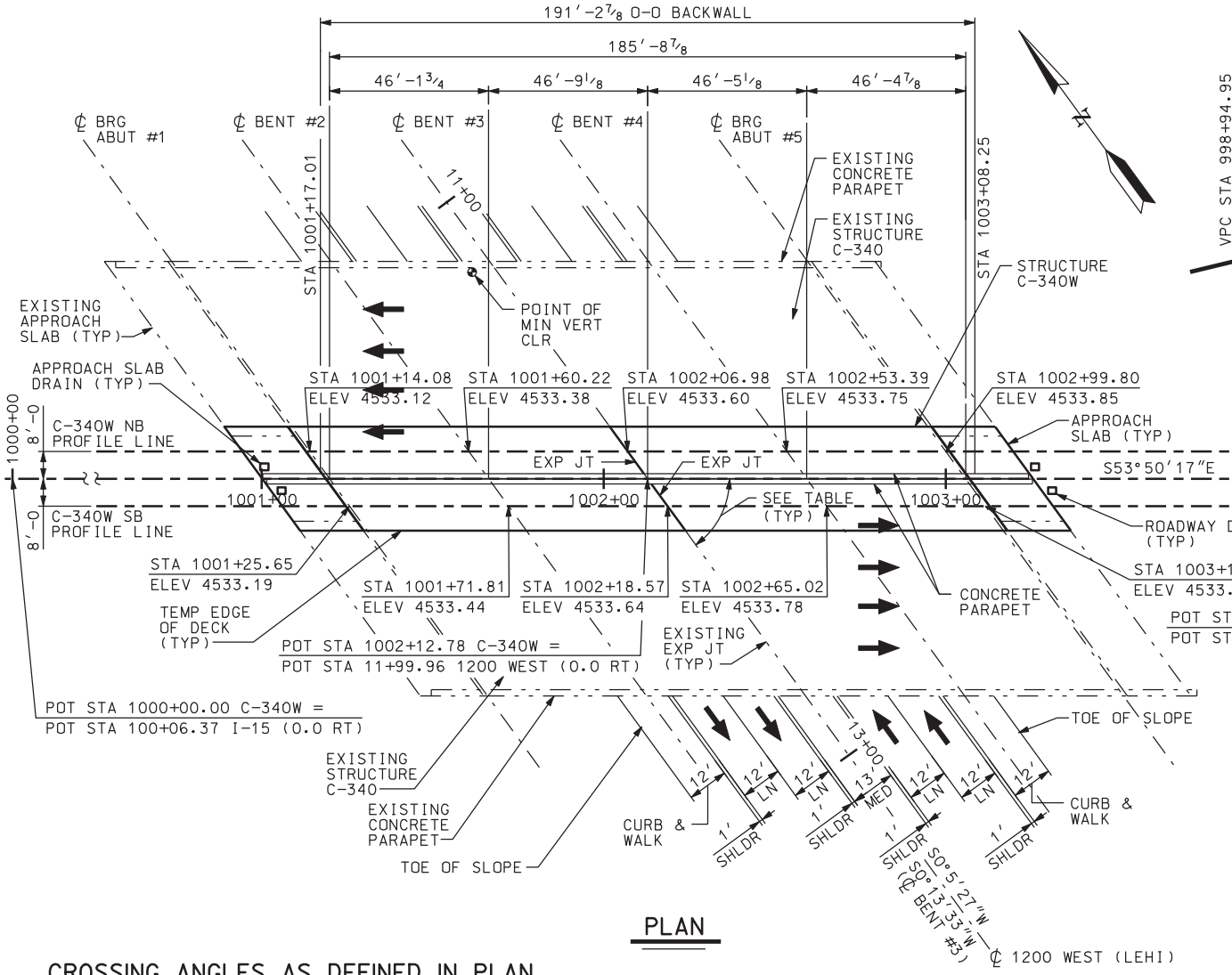


## PLAN

## CROSSING ANGLES AS DEFINED IN PLAN

| LOCATION | ANGLE |
|---|---|
| ℄ ABUT #1 | 54°7'17" |
| ℄ BENT #2 | 54°5'36" |
| ℄ BENT #3 | 54°3'50" |
| ℄ BENT #4 | 53°58'27" |
| ℄ ABUT #5 | 54°2'34" |

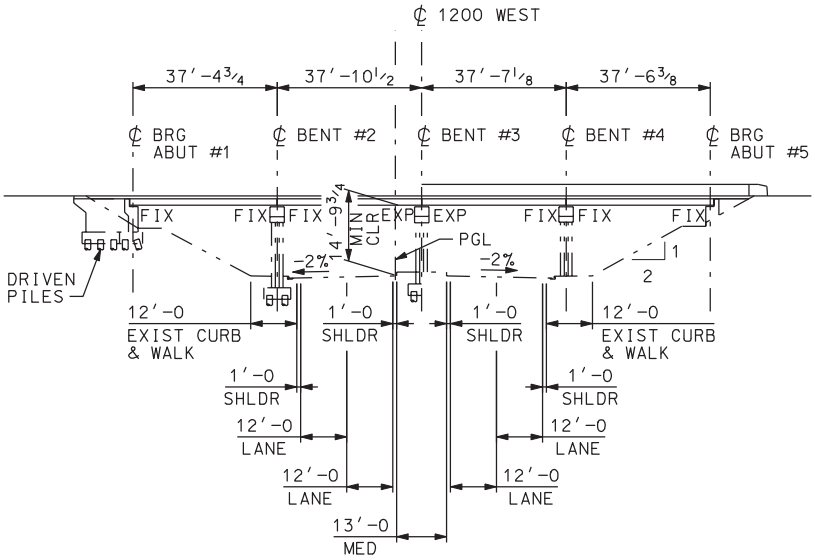


## ELEVATION

NORMAL TO 1200 WEST

## PLAN NOTES

1. SEE "UTILITIES" SHEET FOR UTILITIES LOCATION.

## GENERAL NOT

1. USE COATED DEFORMED BILLET-STEEL BAR M 284 OR M 111 AND M 31 GRADE 60 FOR
2. CONFORM ALL STRUCTURAL STEEL TO AASH EXCEPT WHERE NOTED OTHERWISE.
3. CHAMFER ALL EXPOSED CONCRETE CORNERS
4. PROVIDE 2" CONCRETE COVER TO REINFOR NOTED OTHERWISE.
5. USE CLASS AA (AE) FOR CAST-IN-PLACE SPECIFIED OTHERWISE.
6. ALL NEW SUBSTRUCTURE ELEMENTS ARE DE FIT LINE CONNECTING EXISTING ELEMENT DIMENSIONS PRIOR TO CONSTRUCTION AND REPORT ANY DISCREPANCY BETWEEN THESE TO THE ENGINEER. DO NOT CONSTRUCT OR DISCREPANCIES ARE RESOLVED. ALL STR SURVEY CONTROL POINTS SHOWN ON THE F STATIONING AND ALIGNMENT IS FOR INFO DIRECTIONS AND LOCATIONS USED IN DES
7. ALL DECK, APPROACH SLAB AND PROFILE
8. VERIFY RELATIVE ELEVATION DIFFERENCE NBL AND SBL INTERIOR MOST EXISTING E "DECK SECTIONS" SHEET. IF THE RELAT THAN +/- 1", ADJUST ALL PLAN ELEVATI FOR APPROVAL BEFORE MAKING ANY ADJUS
9. SEE EXISTING STRUCTURE C-340 PLANS F
10. DO NOT SCALE DRAWINGS.
11. HORIZONTAL DIMENSIONS ARE PLAN. VER
12. POT STATION EQUATION POINTS FROM WHI ARBITRARILY AT A DISTANCE OF APPROXI OF APPROACH SLABS.

DGN File: IP_PWPcdns1717\4433_C-340-01_SL01.dgn
02-MAY-2005

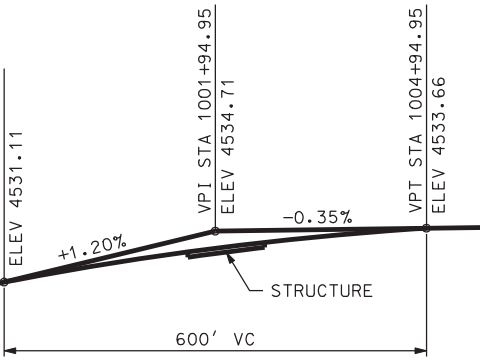


## C-340W PROFILE NB & SB

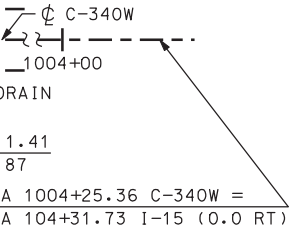


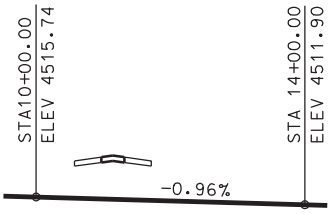


## 1200 WEST PROFILE (EXIST)

(EAST GUTTER LINE)

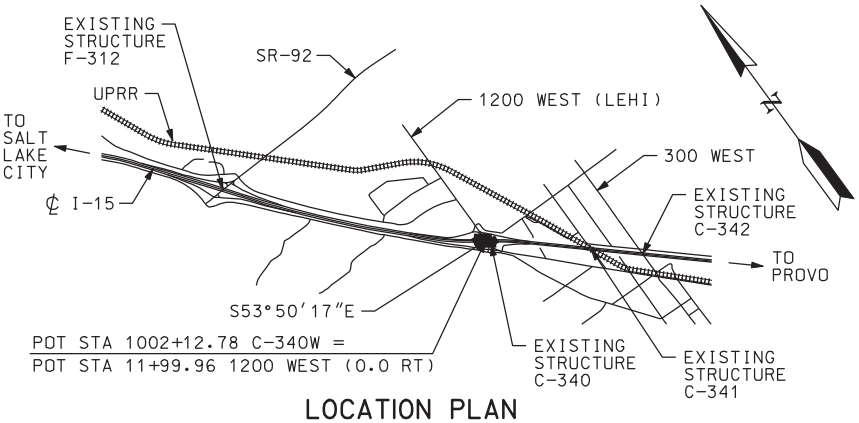


## LOCATION PLAN

## DESIGN DATA

HL-93 LOADING IN ACCORDANCE WITH AASHTO LRFD BRIDGE DESIGN SPECIFICATIONS 3rd EDITION, 2004. SEISMIC DESIGN PER NCHRP 12-49.

INVENTORY AND OPERATING RATINGS FOR HS20-44 ARE IN ACCORDANCE WITH THE AASHTO MANUAL FOR CONDITION ELEVATION OF BRIDGES, 2nd EDITION, AND THE 2001 AND 2003 INTERIM SPECIFICATIONS LOAD FACTOR METHOD. INVENTORY AND OPERATING RATINGS FOR HL-93 ARE IN ACCORDANCE WITH THE GUIDE MANUAL FOR CONDITION EVALUATION AND LOAD RESISTANCE FACTOR RATING (LRFR) OF HIGHWAY BRIDGES.

| | | OPERATING RATING | INVENTORY RATING |
|---|---|---|---|
| EXISTING GIRDERS: | (HS-20) | 2.17 | 1.30 |
| | (HL-93) | 1.96 | 1.51 |
| NEW GIRDERS: | (HL-93) | 2.33 | 1.80 |

CAST-IN-PLACE CONCRETE: f'c = 4000 PSI; fy (REINF) = 60 KSI

STRUCTURAL STEEL: Fy = 36 KSI MIN.

WEARING SURFACE: 5" ASPHALT (NOW) 58 PSF, 0 PSF FWS

DESIGN SPEED: I-15 = 70 M.P.H.; 1200 WEST = 40 M.P.H.

SEISMIC: SEISMIC DESIGN PARAMETERS
(500 YR RETURN PERIOD, 10% PE IN 50 YR)
Ss = MAX CONSIDERED EQ GROUND MOTION
AT 0.2s = 0.48g
S1 = MAX CONSIDERED EQ GROUND MOTION
AT 1.0s = 0.16g
SITE CLASS D

LICENSED PROFESSIONAL ENGINEER
No. 168137
PAUL B. BLACKHAM
STATE OF UTAH

## TES

RS CONFORMING TO AASHTO
R ALL REINFORCING STEEL.

ITO M 270 GRADE 36 MIN.,

S 3/4" EXCEPT WHERE NOTED OTHERWISE.

RCING STEEL EXCEPT WHERE

CONCRETE EXCEPT WHERE

ESIGNED TO ALIGN WITH A BEST
TS. FIELD VERIFY ALL CONTROLLING
O FABRICATION OF ANY MATERIALS.
E PLANS AND THE EXISTING STRUCTURE
R FABRICATE ANY ELEMENTS UNTIL THE
RUCTURE GEOMETRY IS BASED ON LOCAL
OUNDATION PLAN. THE I-15
ORMATION ONLY. ABUTMENT/PIER
SIGN ARE LISTED.

GRADE ELEVATIONS ARE AT TOP OF CONCRETE.

ES BETWEEN C-340 AND C-340W AT BOTTOM OF
BEAMS AT FACE OF BENT #2, SEE
TIVE ELEVATION DIFFERENCES VARY BY MORE
ONS ACCORDINGLY AND SUBMIT TO THE ENGINEER
STMENTS IN THE FIELD.

OR ADDITIONAL INFORMATION.

RTICAL DIMENSIONS ARE PLUMB.

CH ℄ C-340W IS DEFINED ARE SET
MATELY 100 FEET BEYOND THE END

## INDEX OF SHEETS


1. SITUATION & LAYOUT 1
2. SITUATION & LAYOUT 2
3. UTILITIES
4. SOIL DATA SHEET 1
5. SOIL DATA SHEET 2
6. FOUNDATION PLAN
7. DRIVEN PILE DETAILS
8. ABUTMENT PLAN & ELEVATION
9. ABUTMENT DETAILS
10. BENT PLAN & ELEVATION
11. BENT DETAILS
12. BENT FOOTING DETAILS
13. FRAMING PLAN
14. GIRDER DETAILS
15. DIAPHRAGM DETAILS 1
16. DIAPHRAGM DETAILS 2
17. BEARING DETAILS
18. DECK SLAB PLAN
19. DECK SECTIONS
20. EXPANSION JOINT DETAILS
21. SCREED ELEVATIONS
22. PARAPET DETAILS
23. PARAPET END DETAILS
24. APPROACH SLAB PLAN
25. APPROACH SLAB DETAILS
26. APPROACH SLAB DRAIN DETAILS
27. REINFORCING STEEL SCHEDULE 1
28. REINFORCING STEEL SCHEDULE 2


## QUANTITIES

| ITEM | EST | UNIT | AS CONSTR |
|---|---|---|---|
| GRANULAR BACKFILL BORROW (PLAN QUANTITY) | 101 | CU YD | |
| PILE DRIVING EQUIPMENT | 1 | LUMP | |
| DRIVEN PILES 12 3/4 INCH | 4938 | FEET | |
| REINFORCING STEEL - COATED | 124,309 | LB | |
| STRUCTURAL CONCRETE (EST.QTY 643.1 C.Y.) | 1 | LUMP | |
| PREPARE BRIDGE FOR WIDENING | 1 | LUMP | |
| STRUCTURAL STEEL (EST QTY 100,766 LBS) | 1 | LUMP | |
| EXPANSION JOINT | 37 | FEET | |
| EXPANSION JOINT GLAND REPLACEMENT | 153 | FEET | |
| DYNAMIC PILE TESTING | 15 | EACH | |

| NO. | DATE | BY | REMARKS |
|---|---|---|---|

REVISIONS

UTAH DEPARTMENT OF TRANSPORTATION
SALT LAKE CITY, UTAH
STRUCTURES DIVISION

DESIGN KMR 08/04 CHECK PBB 09/04
DRAWN RDF 08/04 CHECK PBB 09/04
QUANT. PBB 11/04 CHECK JW 11/04

APPROVAL RECOMM. DATE SENIOR DESIGN ENGR.
APPROVED FOR USE BY UDOT DATE UDOT BRIDGE ENGR.

I-15; CORRIDOR IN UTAH COUNTY
NORTH LEHI INTERCHANGE
SITUATION & LAYOUT 1

PROJECT NUMBER SP-15-6(52)241

UTAH
COUNTY

C-340W
DRG. NO.

SHT. 1 OF 28

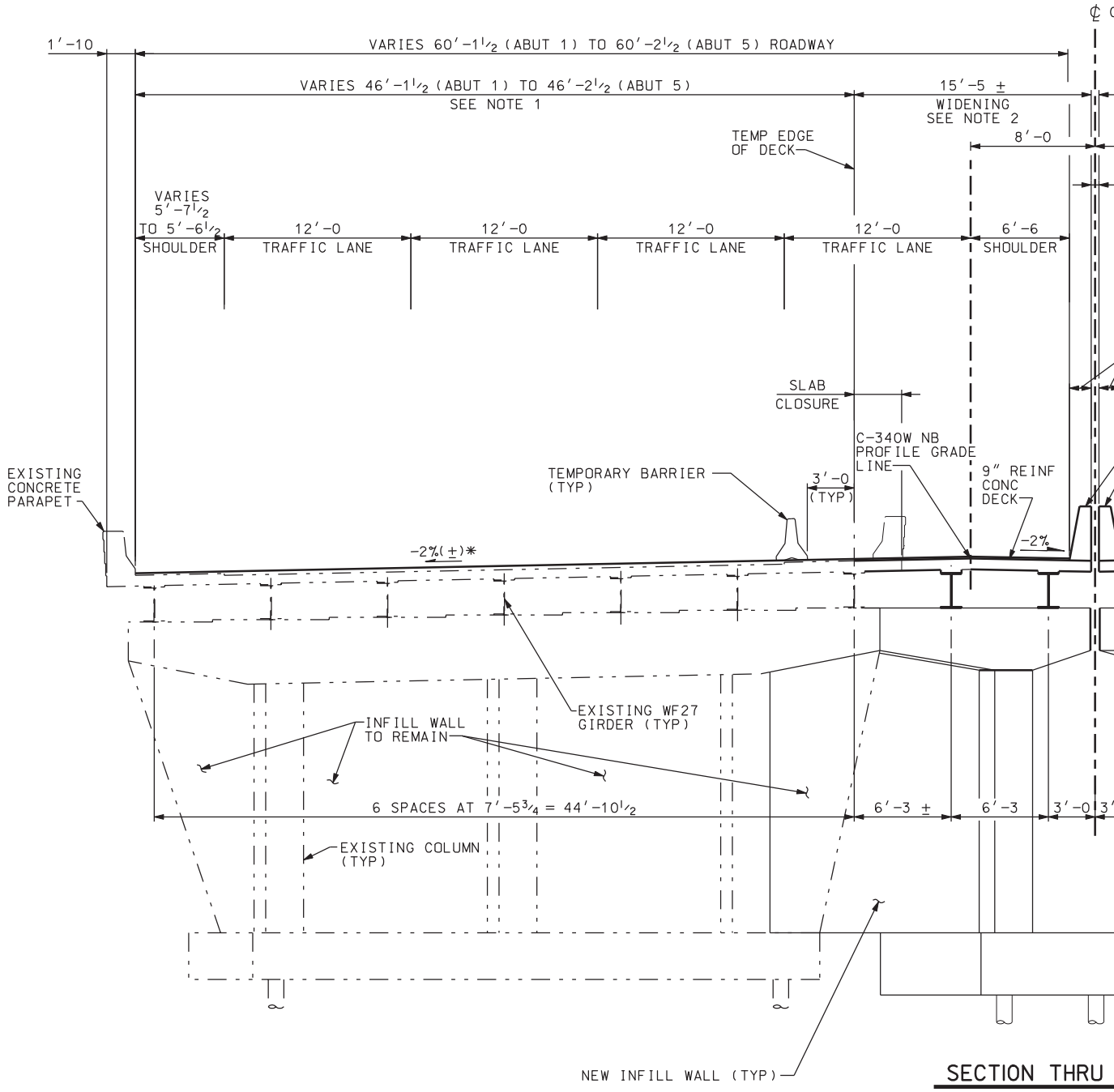


## SECTION THRU

* MATCH EXISTING

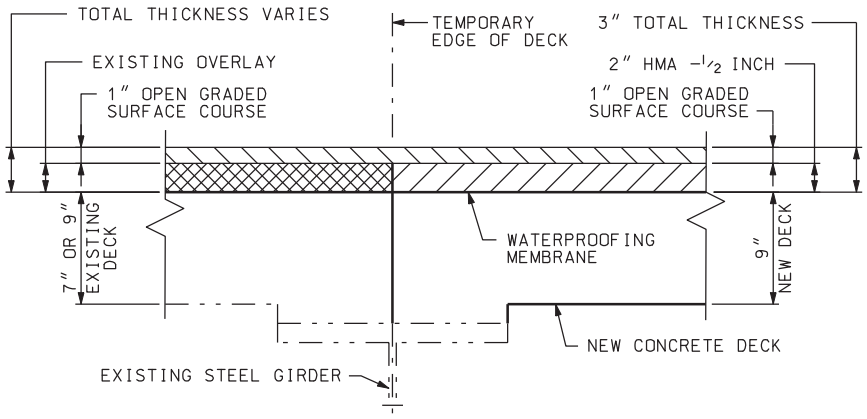


## DECK OVERLAY DETAIL

DGN File: IP_PWPcdms1717\4433_C-340-02_SL02.dgn

02-MAY-2005

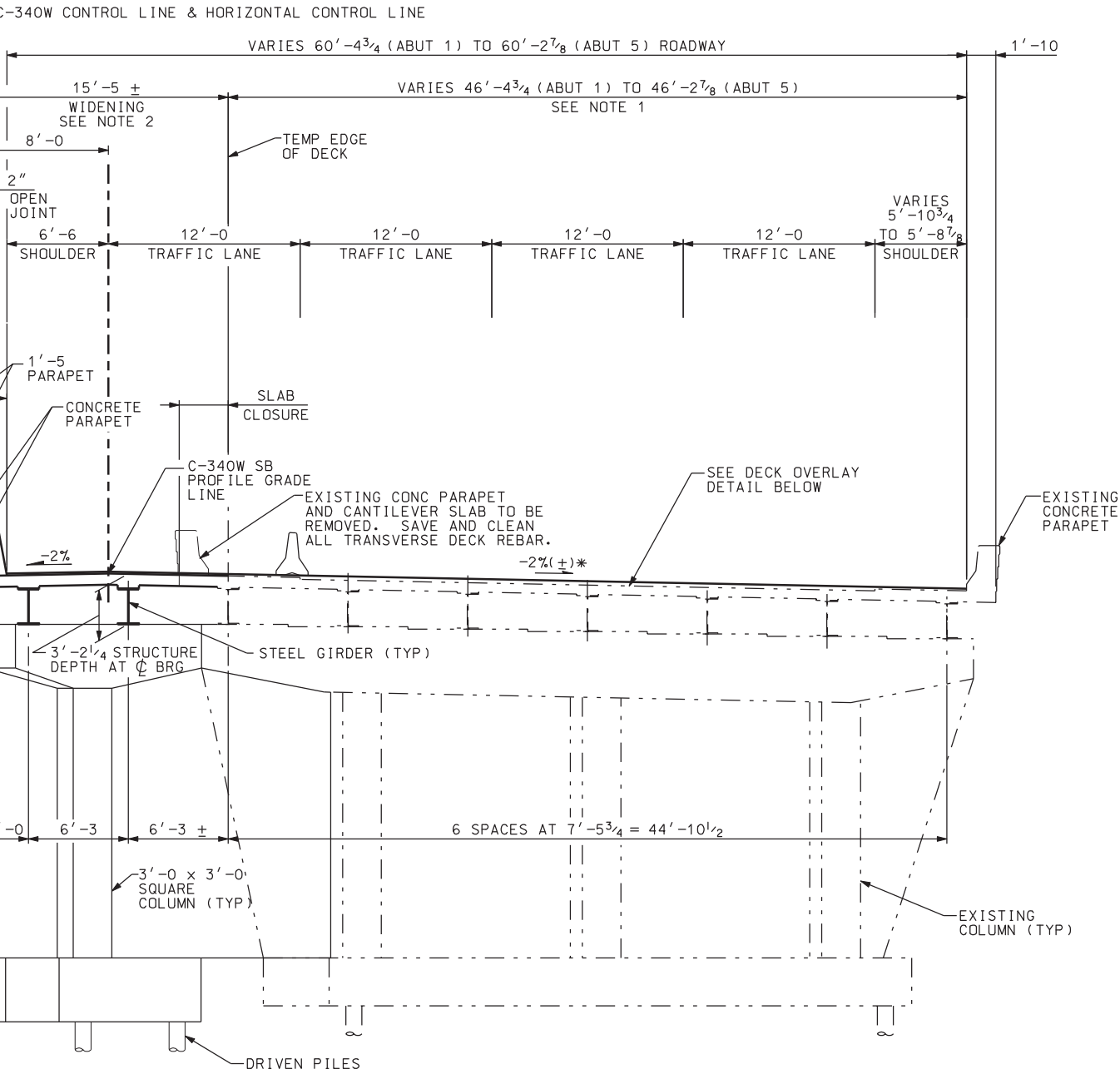


## STRUCTURE

CROSS SLOPE

## NOTES

1. PARTIALLY REMOVE EXISTING ASPHALT SURFACING OVERLAY. SEE M-91 SHEETS FOR TRANSITION AND REHABILITATION DETAILS.
2. APPLY WATERPROOFING MEMBRANE, PLACE 1" OPEN GRADED SURFACE COURSE AND 2" HMA -½ INCH - TOTAL THICKNESS= 3" OR 5". SEE DECK OVERLAY DETAIL AND M-91 SHEETS.
3. PROFILE GRADE LINE IS TAKEN AT TOP OF NEW CONCRETE DECK.

| NO. | DATE | BY | REMARKS |
|---|---|---|---|

REVISIONS

UTAH DEPARTMENT OF TRANSPORTATION
SALT LAKE CITY, UTAH
STRUCTURES DIVISION

DESIGN KMR 08/04 CHECK PBB 09/04
DRAWN RDF 08/04 CHECK PBB 09/04
QUANT. CHECK

APPROVAL RECOMM. DATE SENIOR DESIGN ENGR.
APPROVED FOR USE BY UDOT DATE UDOT BRIDGE ENGR.

I-15; CORRIDOR IN UTAH COUNTY
NORTH LEHI INTERCHANGE
SITUATION & LAYOUT 2
PROJECT NUMBER SP-15-6(52)241

UTAH
COUNTY

C-340W
DRG. NO.

SHT. 2 OF 28

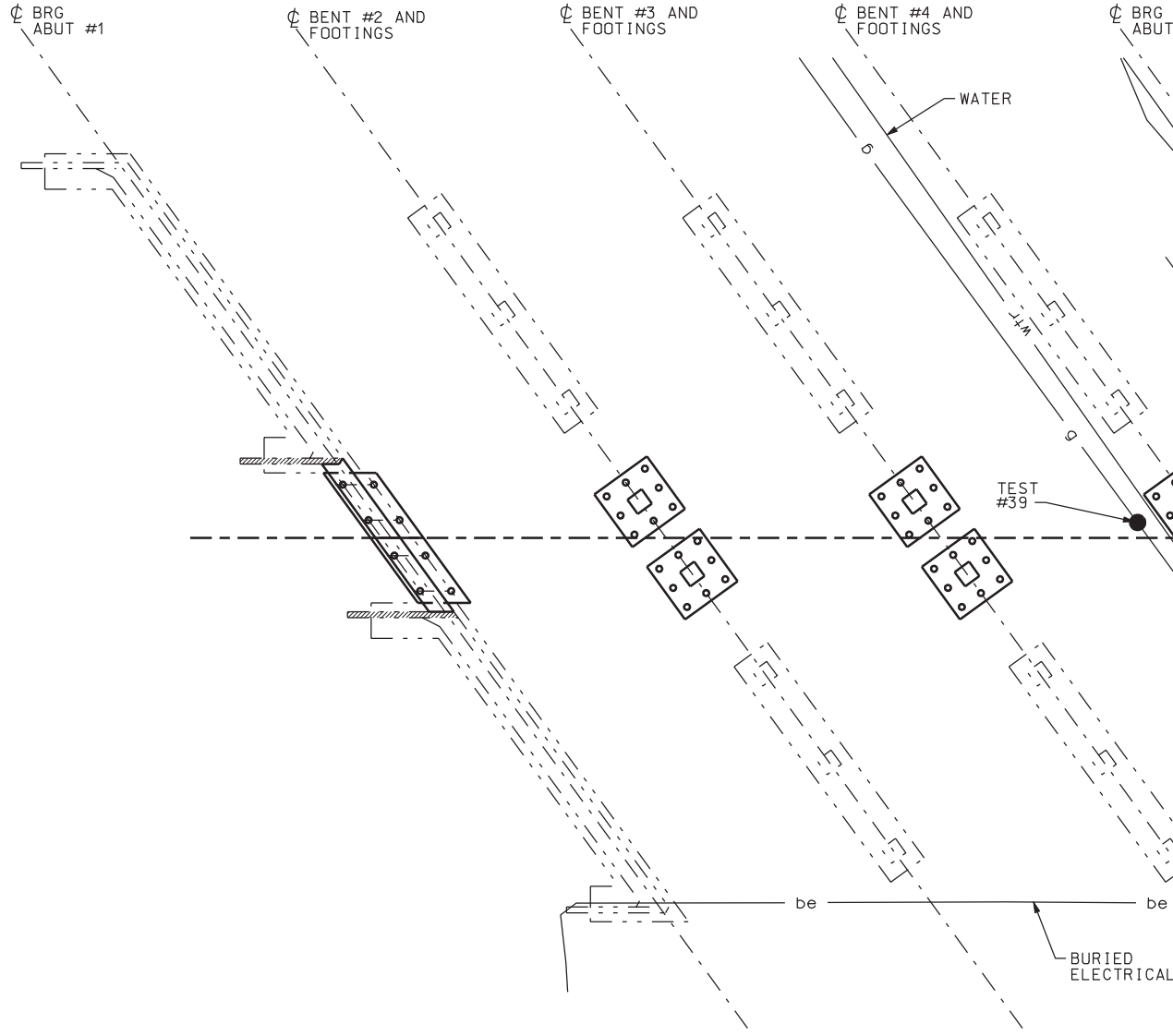


## PLAN

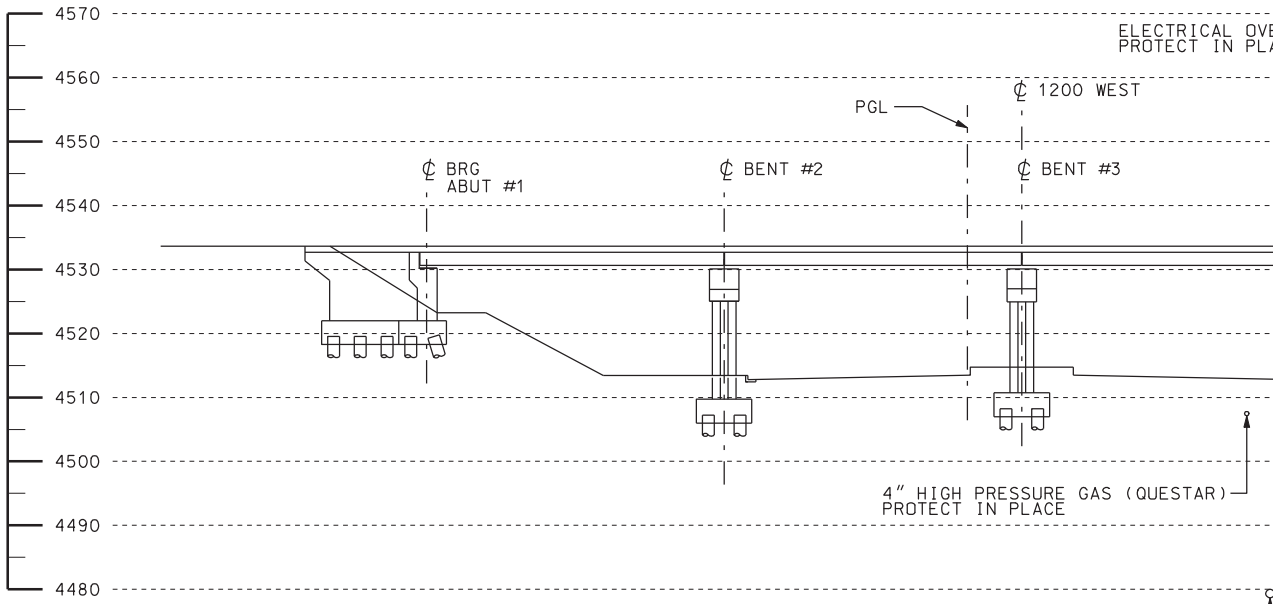


## ELEVATION

TAKEN AT ℄ C-340W

DGN File:IP_PWPrdms1717\4433_C-340-03_UTIL01.dgn

02-MAY-2005

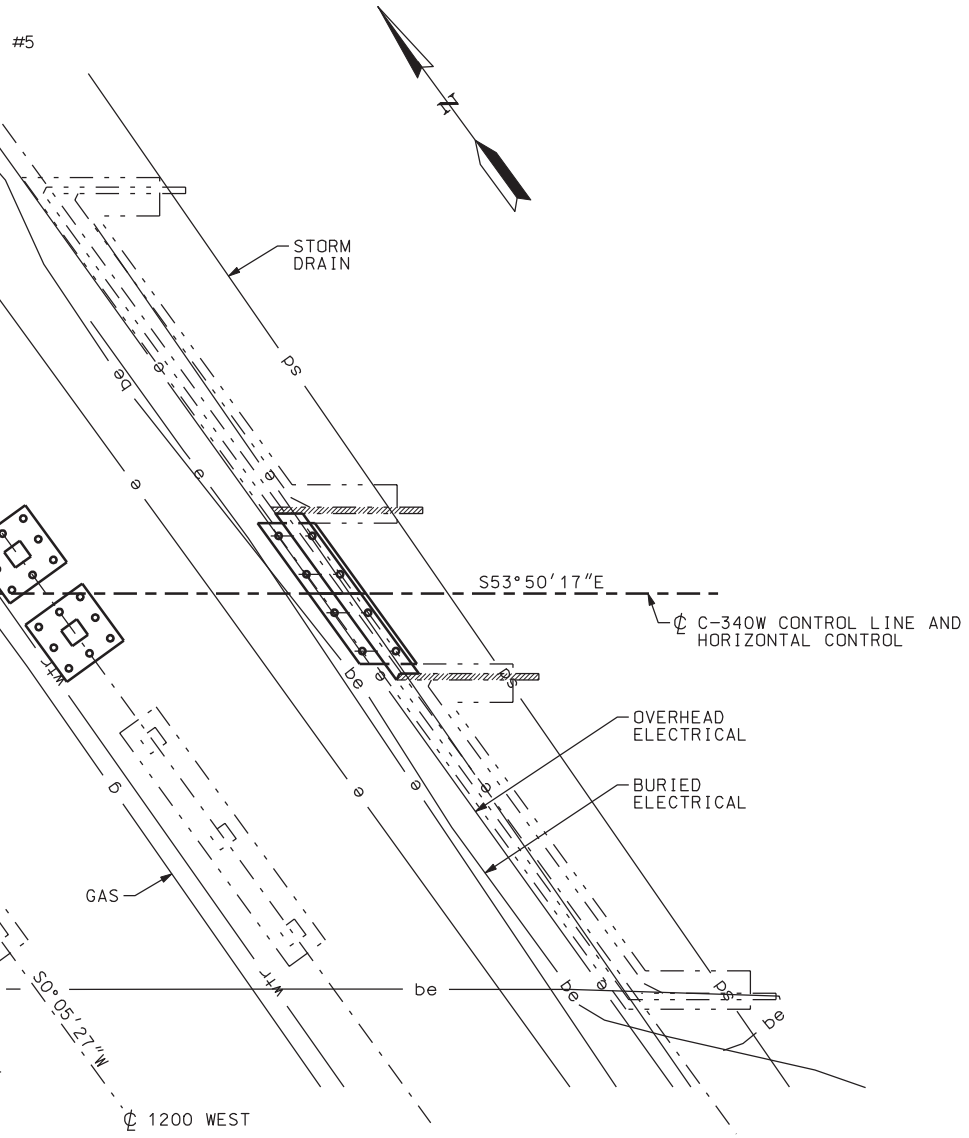


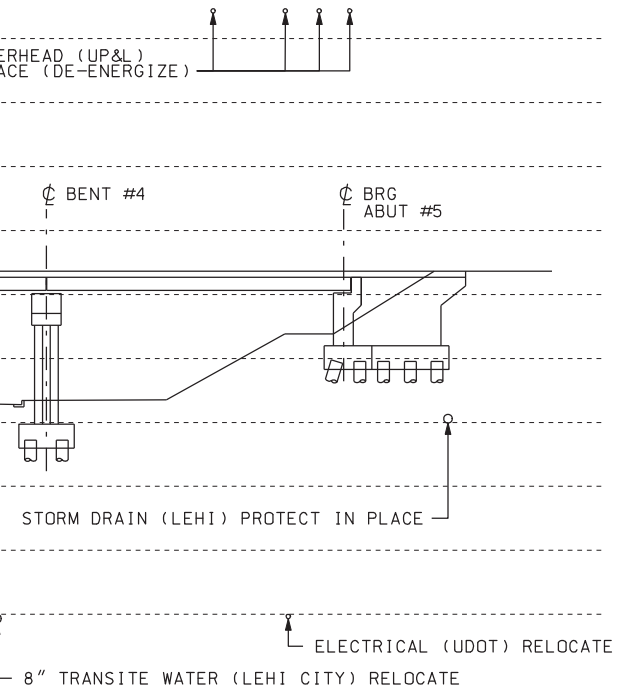


## NOTES

1. SEE ROADWAY DRAWINGS FOR UTILITY CONTACT LIST.
2. UTILITIES SHOWN AT ELEVATION 4480 ARE AT AN UNDETERMINED ELEVATION. VERIFY ACTUAL ELEVATIONS OF THESE UTILTIES ONLY AS NECESSARY.
3. PROTECT IN PLACE ALL UTILITIES LABELED AS SUCH. REPAIR OR REPLACE DISTURBED OR DAMAGED UTILITIES AT THE DISCRETION OF THE UTILITY OWNER AT NO COST TO THE DEPARTMENT.
4. UTILITIES DESIGNATED AS "RELOCATE" ARE THE DESIGN-BUILD RESPONSIBILITY OF THE CONTRACTOR. REFER TO UTILITY RELOCATION (DESIGN-BUILD) SPECIFICATION 0007285.
5. SEE UT 2 FOR UTILITIES DATA NOT SHOWN.

## LEGEND

| | |
|---|---|
| g | EXISTING BURIED GAS |
| be | EXISTING BURIED POWER |
| e | EXISTING OVERHEAD POWER |
| sd | EXISTING STORM DRAIN |
| wtr | EXISTING WATER |

| NO. | DATE | BY | REMARKS |
|---|---|---|---|
| | | | |

REVISIONS

UTAH DEPARTMENT OF TRANSPORTATION
SALT LAKE CITY, UTAH
STRUCTURES DIVISION

DESIGN JW 03/04 CHECK PBB 03/04
DRAWN RDF 03/04 CHECK PBB 03/04
QUANT. CHECK

APPROVAL RECOMM. DATE SENIOR DESIGN ENGR.
APPROVED FOR USE BY UDOT DATE UDOT BRIDGE ENGR.

I-15; CORRIDOR IN UTAH COUNTY
NORTH LEHI INTERCHANGE
UTILITIES

PROJECT NUMBER SP-15-6(52)241

UTAH
COUNTY

C-340W
DRG. NO.

SHT. 3 OF 28

# DRILL HOLE LOG

## BORING NO. 04-1

Sheet: 1 of 1

PROJECT: I-15, CORRIDOR IN UTAH COUNTY - STRUCTURE C340 PROJECT NO.: 200401.045
CLIENT: UTAH DEPARTMENT OF TRANSPORTATION DATE: 7/28/04
LOCATION: SEE SITE PLAN: N ~123540, E ~172425 ELEVATION: ~4512.8'
DRILLER: D. SAMPSON, W. SORENSEN LOGGED BY: R.J., V.N.B.
EQUIP./DRILL METHOD: CME-55 / N.W. CASING
DEPTH TO WATER - INITIAL: ▽ N.M. AFTER 24 HOURS: ▽ 51.4' (8/2/04)

| Elev. (Feet) | Depth (Feet) | Lithology | Sample Type | Rec. (In.) | Blows Per 6" & Torvane (tsf) | USCS (AASHTO) | Material Description | | Dry Density, pcf | Moisture Content, % | Atter. Liquid Limit, % | Atter. Plasticity Index, % | Gradation Gravel, % | Gradation Sand, % | Gradation Silt/Clay, % | Other Tests |
|---|---|---|---|---|---|---|---|---|---|---|---|---|---|---|---|---|
| | | | | 15 | 7,10,9 | SM | brown, slightly moist, med. dense | SILTY SAND W/GRAVEL | | | | | | | | |
| 4510 | | | | | | | gray | CLAY | | | | | | | | |
| | 5 | | | 6 | Pushed | SC | brown, wet, med. dense | CLAYEY SAND W/GRAVEL | | | | | | | | |
| | | | | 14 | 7,7,8 1.00+ | CL (A-6(8)) | brown, wet, very stiff | | | 21.7 | 35 | 14 | 0 | 3 | 97 | |
| 4505 | | | | | | | some gravel | | | | | | | | | |
| | 10 | | | 18 | 6,7,8 1.00+ | CL | brown, moist, very stiff | | | | | | | | | |
| 4500 | | | | | | | | LEAN CLAY | | | | | | | | |
| | 15 | | | 16 | Pushed 1.00+ | CL (A-7-5(12)) | brown, moist, very stiff | | 102.5 | 24.0 | 42 | 21 | 0 | 1 | 99 | UC |
| 4495 | | | | | | | | | | | | | | | | |
| | 20 | | | 18 | 2,3,3 0.83 | CL | brown, moist, stiff | | | | | | | | | |
| 4490 | | | | | | | | | | | | | | | | |
| | 25 | | | 18 | Pushed 0.80 | CH (A-7-5(16)) | brown, moist, stiff | FAT CLAY | 86.7 | 34.3 | 52 | 28 | 1 | 3 | 96 | UC |
| 4485 | | | | | | | | | | | | | | | | |
| | 30 | | | 18 | 0,2,3 0.42 | CL/CH | dk. gray, moist, firm | LEAN TO FAT CLAY | | | | | | | | |
| 4480 | | | | | | | | | | | | | | | | |
| | 35 | | | 18 | Pushed 0.32 | CL (A-6(10)) | dk. gray, very moist, firm | | 87.0 | 36.4 | 40 | 18 | 0 | 0 | 100 | UC |
| 4475 | | | | | | | | LEAN CLAY | | | | | | | | |
| | 40 | | | 20 | 0/20" 0.33 | CL/CH | dk. gray, very moist, firm | | | | | | | | | |
| 4470 | | | | | | | | | | | | | | | | |
| | 45 | | | 13 | Pushed | ML (A-4(8)) | gray, moist | SILT | 102.3 | 25.4 | | NP | 0 | 3 | 97 | UC |
| 4465 | | | | | | | | | | | | | | | | |
| | 50 | | | 16 | 3,10,11 0.42 | CL-ML/ML/ SM | gray, moist, firm to med. dense | INTERBEDDED LAYERS OF SILTY CLAY, SILT & SILTY FINE SAND | | | | | | | | |
| 4460 | | | | | | | | | | | | | | | | |
| | 55 | | | 10 | Pushed | ML (A-4(8)) | gray, moist, med. dense | | 99.2 | 26.8 | | NP | 0 | 23 | 77 | DS |
| | | | | 11 | 3,6,5 | SM | gray, wet, med. dense | SILTY SAND | | | | | | | | |
| 4455 | | | | | | | | | | | | | | | | |
| | 60 | | | 14 | 8,27,20 0.75 | CL | gray-brown, moist, stiff, med. dense | SANDY LEAN CLAY W/SILTY SAND LAYERS | | | | | | | | |
| 4450 | | | | | | | * layers of sand & clay | | | | | | | | | |
| | 65 | | | 16 | Pushed | CL (A-4(8) | brown, very moist, stiff | LEAN CLAY sand & gravel layers to 0.5" thick | 106.9 | 20.8 | 28 | 9 | 4 | 14 | 82 | CT UC |
| 4445 | | | | | | | | | | | | | | | | |
| | 70 | | | 17 | 6,5,7 0.54 | SM | wet, loose to med. dense | SILTY SAND | | | | | | | | |
| | | | | | | CL | gray-brown, moist, stiff | | | | | | | | | |
| 4440 | | | | | | | | LEAN CLAY W/SAND LENSES | | | | | | | | |

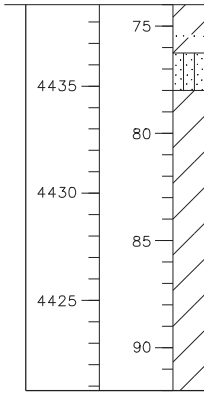


DGN File: IP_PWPadms1717\4433_C-340-04 soil data 1.dgn

02-MAY-2005

| | | | | | |
|---|---|---|---|---|---|
| 6 | Pushed 0.86 | CL | lt. brown, moist, stiff | | |
| 14 | 13,24,25 0.46 | SM | lt. brown, moist, dense | SILTY SAND | |
| 18 | 3,5,6 0.59 | CL | lt. brown, moist, stiff | | |
| 18 | 5,9,10,11 1.00+ | CL | lt. brown, moist, very stiff | LEAN CLAY | |
| 20 | 10,16,24,31 1.00+ | CL | lt. brown, moist, very stiff | | |

× Driller Observation

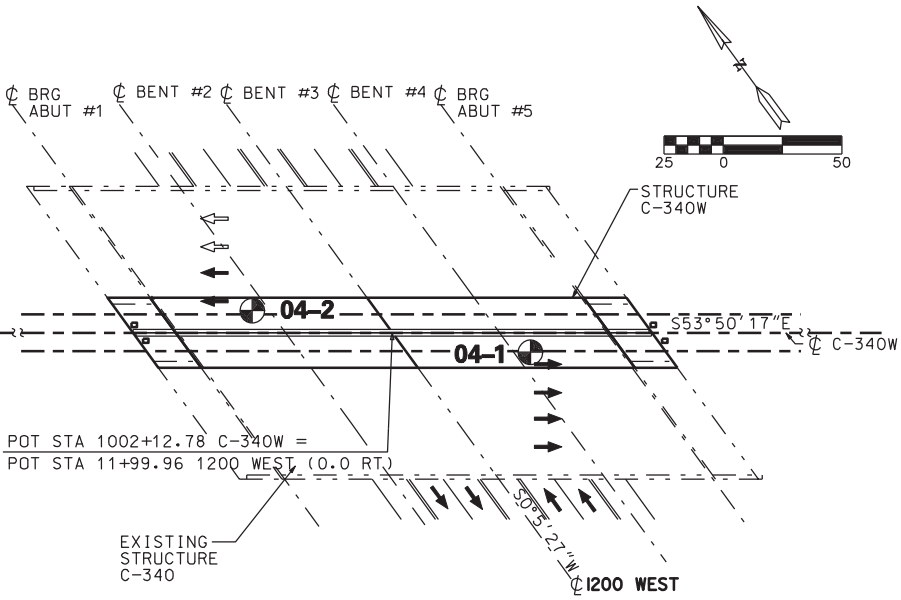


LOCATION PLAN

# KEY TO BORING LOG

## SYMBOLS

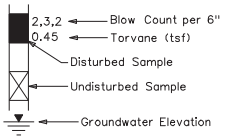


UC = Unconfined Compression Test
CT = Consolidation Test
SG = Specific Gravity Test
DS = Direct Shear Test

## RELATIVE DENSITY (NON-PLASTIC - SAND & SILT)

VERY LOOSE N<4
LOOSE N 4-10
MED DENSE N 10-30
DENSE N 30-50
VERY DENSE N>50

## CONSISTENCY (PLASTIC - SILT & CLAY)

VERY SOFT N<2
SOFT N 2-4
MEDIUM STIFF N 4-8
STIFF N 8-15
VERY STIFF N 15-30
HARD N>30

## GENERAL NOTES

1. THE SUBSURFACE EXPLORATIONS SHOWN WERE CONDUCTED BETWEEN 07-26-04 AND 07-28-04 BY RB&G ENGINEERING, INC..
2. THESE BORING LOGS REPRESENT A SYNOPSIS OF THE SOIL DEPOSITS ENCOUNTERED WITHIN EACH BORING AND ARE BASED ON SOUND GEOLOGICAL AND ENGINEERING JUDGMENT. BECAUSE SOIL IS A COMPLEX MEDIUM, THESE BORING LOGS MAY OR MAY NOT REPRESENT THE SOIL CONDITIONS AT THIS SITE. THIS SUBSURFACE INTERPRETATION IS PRESENTED IN GOOD FAITH AND IS NOT INTENDED AS A SUBSTITUTE FOR PERSONAL INVESTIGATION AND JUDGEMENT OF THE CONTRACTOR.
3. THE WATER LEVELS AND CONDITIONS INDICATED ON THE BORING LOGS REPRESENT HOLE CONDITIONS ON THE DATE SHOWN, HOWEVER, IT SHOULD BE NOTED, THAT AT LOCATIONS AWAY FROM THE BORINGS OR AT ANOTHER TIME THE WATER LEVELS AND CONDITIONS MAY VARY SIGNIFICANTLY.
4. THE STRATIFICATION LINES REPRESENT THE APPROXIMATE BOUNDARIES BETWEEN SOIL TYPES AND THE TRANSITION MAY BE GRADUAL.
5. COBBLE - A ROCK WITH AN AVERAGE DIMENSION BETWEEN 3 INCHES AND 12 INCHES
6. BOULDER - A ROCK WITH AN AVERAGE DIMENSION OF 12 INCHES OR GREATER

NOTE: DRILL RIG USED - CME 55 HAMMER E=0.75

GEOTECHNICAL ENGINEER

| NO. | DATE | BY | REMARKS |
|---|---|---|---|
| | | | |

REVISIONS

UTAH DEPARTMENT OF TRANSPORTATION
SALT LAKE CITY, UTAH
STRUCTURES DIVISION
RB&G ENGINEERING INC.

DESIGN BEP 10/04 CHECK
DRAWN JPN 10/04 CHECK
QUANT. CHECK

APPROVAL RECOMM. DATE SENIOR DESIGN ENGR.
APPROVED FOR USE BY UDOT DATE UDOT BRIDGE ENGR.

I-15; CORRIDOR IN UTAH COUNTY
NORTH LEHI INTERCHANGE
SOIL DATA SHEET 1
PROJECT NUMBER SP-15-6(52)241

UTAH
COUNTY

C-340W
DRG. NO.

SHT. 4 OF 28

# DRILL HOLE LOG

## BORING NO. 04-2

Sheet: 1 of 1

PROJECT: I-15, CORRIDOR IN UTAH COUNTY - STRUCTURE C340 PROJECT NO.: 200401.045
CLIENT: UTAH DEPARTMENT OF TRANSPORTATION DATE: 7/26/04 TO 7/28/04
LOCATION: SEE SITE PLAN: N 123617, E 172354 ELEVATION: ~4513.4'
DRILLER: D. SAMPSON, W. SORENSEN LOGGED BY: R.J., V.N.B.
EQUIP./DRILL METHOD: CME-55 / N.W. CASING TO 51' THEN DRILLING MUD
DEPTH TO WATER - INITIAL: ▽ N.M. AFTER 24 HOURS: ▼ 51.1'

| Elev. (Feet) | Depth (Feet) | Lith-ology | Sample Type | Rec. (In.) | Blows Per 6" & Torvane (tsf) | USCS AASHTO | Material Description | | Dry Density, pcf | Moisture Content, % | Atter. Liquid Limit, % | Atter. Plasticity Index, % | Gradation Gravel, % | Gradation Sand, % | Gradation Silt/Clay, % | Other Tests |
|---|---|---|---|---|---|---|---|---|---|---|---|---|---|---|---|---|
| | | | | 13 | 8,10,10 | CL | brown, dry, stiff/med. dense | GRAVELLY CLAY TO CLAYEY GRAVEL W/SILT & SAND (fill?) | | | | | | | | |
| 4510 | | | | | | | | | | | | | | | | |
| | 5 | | | 16 | 5,5,5 0.90+ | CL | brown, moist, very stiff, w/lt. brown nodules | | | | | | | | | |
| 4505 | | | | | | | | | | | | | | | | |
| | 10 | | | 11 | Pushed 0.90+ | CL (A-6(9)) | brown, moist, very stiff, w/orange & lt. gray layers & nodules | | 105.0 | 23.8 | 35 | 13 | 0 | 1 | 99 | UC CT |
| 4500 | | | | | | | | | | | | | | | | |
| | 15 | | | 18 | 4,4,5 0.90+ | CL | brown, moist, very stiff, w/dk. brown nodules | LEAN CLAY | | | | | | | | |
| 4495 | | | | | | | | | | | | | | | | |
| | 20 | | | 18 | Pushed 0.74 | CL (A-7-5(14)) | brown, moist, stiff, w/dk. brown & orange nodules | | 88.7 | 33.8 | 46 | 23 | 0 | 2 | 98 | CT UC |
| 4490 | | | | | | | | | | | | | | | | |
| | 25 | | | 18 | 0/8",1/4",2 0.56 | CL | brown, moist, stiff, w/dk. brown & orange streaks & nodules | | | | | | | | | |
| 4485 | | | | | | | | | | | | | | | | |
| | 30 | | | 18 | Pushed 0.54 | CL (A-7-5(11)) | gray to dk. gray, moist, stiff, w/some fine sand lenses, slight organic odor | | 86.2 | 35.9 | 41 | 18 | 0 | 1 | 99 | CT UC |
| 4480 | | | | | | | | | | | | | | | | |
| | 35 | | | 18 | 0/12",3 0.37 | CL | gray, moist, firm, slight organic odor | LEAN CLAY | | | | | | | | |
| 4475 | | | | | | | | | | | | | | | | |
| | 40 | | | 18 | Pushed 0.33 | CL (A-7-5(13)) | gray, moist, firm, slight organic odor | | 82.9 | 38.4 | 44 | 21 | 0 | 0 | 100 | CT UC |
| 4470 | | | | | | | | | | | | | | | | |
| | 45 | | | 15 | 4,8,7 | ML (A-4) | gray, moist, med. dense, slight organic odor | FINE SANDY SILT | | 25.0 | | NP | 0 | 4 | 96 | |
| 4465 | | | | | | | | | | | | | | | | |
| | 50 | | | 15 | Pushed | CL (A-4(8)) | gray, moist, stiff | LEAN CLAY | 104.1 | 25.6 | 31 | 9 | 0 | 3 | 97 | UC |
| | | | | 17 | 7,7,8 0.62 | ML | gray, moist, med. dense to stiff | SILTY FINE SAND TO SANDY SILT W/CLAY LENSES & LAYERS | | | | | | | | |
| 4460 | | | | | | | | | | | | | | | | |
| | 55 | | | 16 | 5,22,32 0.56 | ML SM (A-3(0)) | gray, moist, med. dense to stiff | | | | | | | | | |
| | | | | | | | gray, very moist, very dense | SILTY FINE TO COARSE SAND | | 17.6 | | NP | 0 | 73 | 27 | |
| 4455 | | | | | | | | | | | | | | | | |
| | 60 | | | 18 | 6,8,16 0.82 | CL | gray-brown | | | | | | | | | |
| | | | | | | | gray-brown, moist, stiff | LEAN CLAY | | | | | | | | |
| | | | | | | SC/CL | brown, wet, dense | CLAYEY SAND | | | | | | | | |
| 4450 | | | | | | | | | | | | | | | | |
| | 65 | | | 18 | Pushed 0.56 | CL (A-6(8)) | gray-brown, moist, stiff | LEAN CLAY | 96.8 | 25.1 | 28 | 11 | 0 | 17 | 83 | CT UC |
| 4445 | | | | | | | | | | | | | | | | |
| | 70 | | | 17 | 3,6,14 0.45 | CL-ML | brown, moist, firm | LEAN CLAY W/SAND | | | | | | | | |
| | | | | | | SC | brown, wet, dense | CLAYEY SAND | | | | | | | | |
| 4440 | | | | | | | | | | | | | | | | |
| | 75 | | | 13 | 0.59 10,24,29 | CL-ML SM | brown, moist, stiff | LAYERS OF SILTY CLAY & SANDY SILT | | | | | | | | |
| | | | | | | | brown, wet, dense | | | | | | | | | |

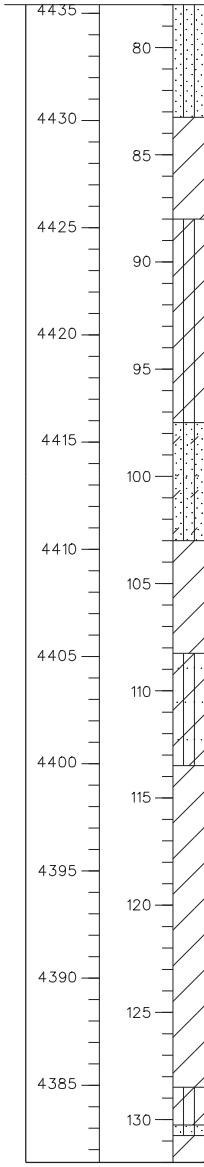


DGN File: IP_PWPcdns1717\4433_C-340-05 soil data 2.dgn

02-MAY-2005

| | | | | | | | | | | | | | | |
|---|---|---|---|---|---|---|---|---|---|---|---|---|---|---|
| 0 | Pushed | - | brown, | SILTY FINE TO COARSE SAND | 113.7 | 14.2 | | NP | 0 | 82 | 18 | DS | | |
| 16 | 13,27,24 | SM (A-3(0)) | moist, dense, silt lenses | | | | | | | | | | | |
| 18 | 4,5,6 0.49 | CL | lt. brown, moist, firm | LEAN CLAY | | | | | | | | | | |
| 17 | 12,16,21 0.79 | CL-ML | lt. brown, moist, stiff, rusty-orange-brown lenses | SILTY CLAY W/SILT LENSES & LAYERS | | | | | | | | | | |
| 17 | 13,21,34 0.71 | CL-ML | lt. brown, moist, stiff | | | | | | | | | | | |
| 15 | 20,30,37 | SM (A-4(1)) | lt. brown, wet, very dense | SILTY FINE SAND W/SILTY CLAY LAYERS TO 0.75" THICK | | | | | | | | | | |
| 24 | 4,6,11,13 0.78 | CL | lt. brown, moist, stiff, orange nodules, trace of fine gravel/ coarse sand | LEAN CLAY | | | | | | | | | | |
| 24 | 0.35 1,3,9,11 0.43 | CL-ML | lt. brown, moist, firm | SILTY CLAY W/SILTY SAND LAYERS LESS THAN 1" THICK | | | | | | | | | | |
| 24 | 6,10,8,10 0.70 | CL | lt. brown, moist, stiff | | | | | | | | | | | |
| 19 | 7,14,13,15 0.71 | CL | lt. brown, moist, stiff | LEAN CLAY | | | | | | | | | | |
| 24 | 3,3,6,8 0.64 | CL | lt. brown to lt. gray, moist, stiff | | | | | | | | | | | |
| | 0.41 | CL-ML/ML | lt. brown, very moist, firm | SILTY CLAY TO SILT | | | | | | | | | | |
| | | SM | lt. brown, wet, med. dense | SILTY FINE TO MED. SAND | | | | | | | | | | |
| 21 | 14,12,16,21 0.90+ | CL | lt. brown, moist, very stiff | LEAN CLAY | | | | | | | | | | |

# KEY TO BORING LOG

## SYMBOLS

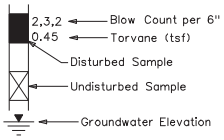


UC = Unconfined Compression Test
CT = Consolidation Test
SG = Specific Gravity Test
DS = Direct Shear Test

## RELATIVE DENSITY (NON-PLASTIC - SAND & SILT)

VERY LOOSE N<4
LOOSE N 4-10
MED DENSE N 10-30
DENSE N 30-50
VERY DENSE N>50

## CONSISTENCY (PLASTIC - SILT & CLAY)

VERY SOFT N<2
SOFT N 2-4
MEDIUM STIFF N 4-8
STIFF N 8-15
VERY STIFF N 15-30
HARD N>30

## GENERAL NOTES

1. THE SUBSURFACE EXPLORATIONS SHOWN WERE CONDUCTED BETWEEN 07-26-04 AND 07-28-04 BY RB&G ENGINEERING, INC..
2. THESE BORING LOGS REPRESENT A SYNOPSIS OF THE SOIL DEPOSITS ENCOUNTERED WITHIN EACH BORING AND ARE BASED ON SOUND GEOLOGICAL AND ENGINEERING JUDGMENT. BECAUSE SOIL IS A COMPLEX MEDIUM, THESE BORING LOGS MAY OR MAY NOT REPRESENT THE SOIL CONDITIONS AT THIS SITE. THIS SUBSURFACE INTERPRETATION IS PRESENTED IN GOOD FAITH AND IS NOT INTENDED AS A SUBSTITUTE FOR PERSONAL INVESTIGATION AND JUDGEMENT OF THE CONTRACTOR.
3. THE WATER LEVELS AND CONDITIONS INDICATED ON THE BORING LOGS REPRESENT HOLE CONDITIONS ON THE DATE SHOWN, HOWEVER, IT SHOULD BE NOTED, THAT AT LOCATIONS AWAY FROM THE BORINGS OR AT ANOTHER TIME THE WATER LEVELS AND CONDITIONS MAY VARY SIGNIFICANTLY.
4. THE STRATIFICATION LINES REPRESENT THE APPROXIMATE BOUNDARIES BETWEEN SOIL TYPES AND THE TRANSITION MAY BE GRADUAL.
5. COBBLE - A ROCK WITH AN AVERAGE DIMENSION BETWEEN 3 INCHES AND 12 INCHES
6. BOULDER - A ROCK WITH AN AVERAGE DIMENSION OF 12 INCHES OR GREATER

NOTE: DRILL RIG USED - CME 55
HAMMER E=0.75

GEOTECHNICAL ENGINEER

| NO. | DATE | BY | REMARKS |
|---|---|---|---|
| | | | |

REVISIONS

UTAH DEPARTMENT OF TRANSPORTATION
SALT LAKE CITY, UTAH
STRUCTURES DIVISION

RB&G ENGINEERING INC.

DESIGN BEP 10/04 CHECK
DRAWN JPN 10/04 CHECK
QUANT. CHECK

APPROVAL RECOMM. DATE SENIOR DESIGN ENGR.
APPROVED FOR USE BY UDOT DATE UDOT BRIDGE ENGR.

I-15; CORRIDOR IN UTAH COUNTY
NORTH LEHI INTERCHANGE
SOIL DATA SHEET 2
PROJECT NUMBER SP-15-6(52)241

UTAH
COUNTY

C-340W
DRG. NO.

SHT. 5 OF 28

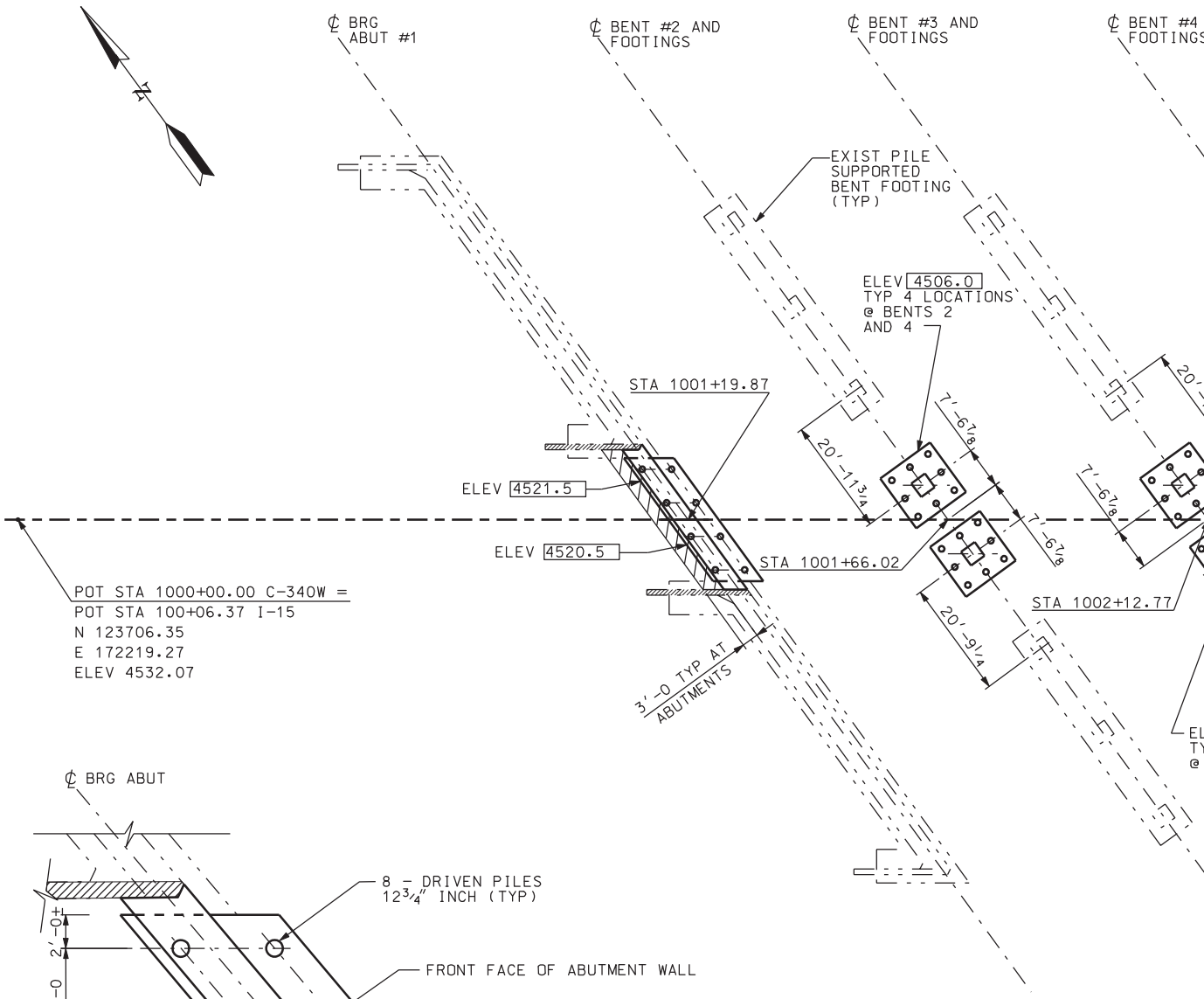


FOUNDATI

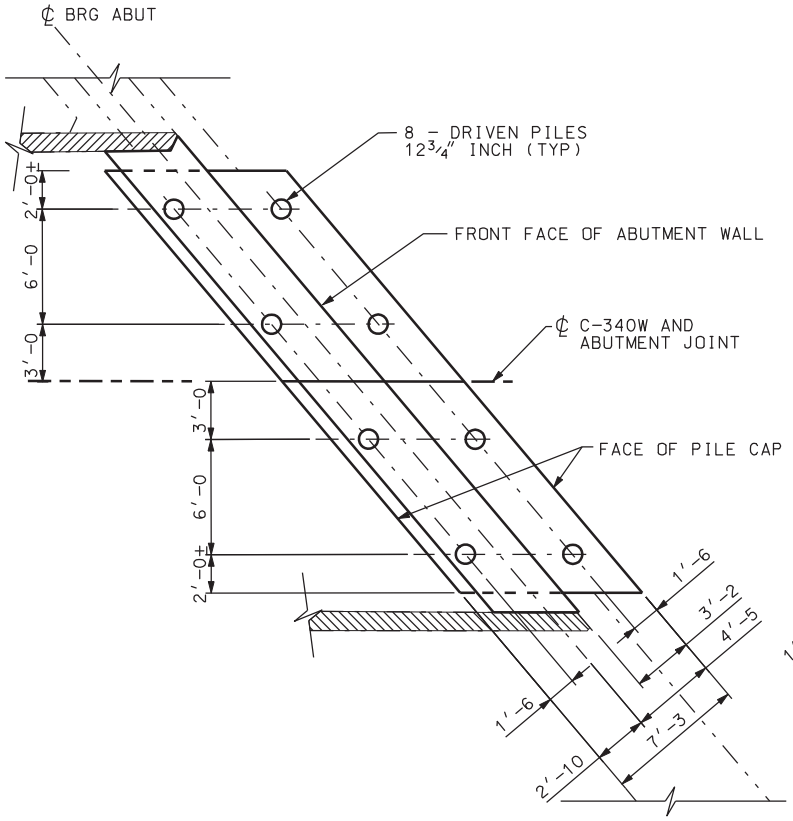


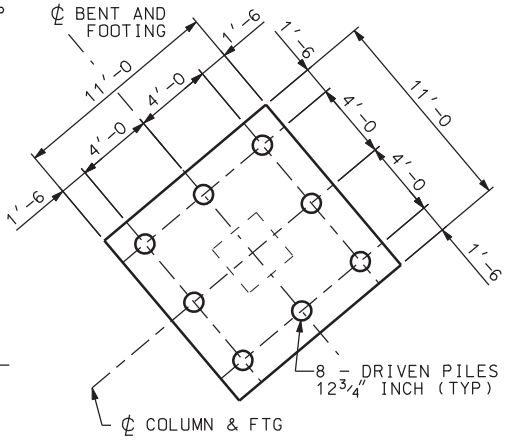


## PILE LAYOUT FOR ABUTMENTS #1 & #5

### DETAIL

2 LOCATIONS

## PILE LAYOUT FOR BENTS #2, #3 & #4

### DETAIL

6 LOCATIONS

DGN File: IP_PWPcdns1717\4433_C-340-06_FOUN01.dgn

02-MAY-2005

| CONTROL POINTS | | | |
|---|---|---|---|
| POINTS | N | E | ELEV |
| CP-C340-1 | 123929.24 | 172439.49 | 4516.08 |
| CP-C340-2 | 123548.20 | 172570.44 | 4532.44 |
| CP-C340-3 | 123262.14 | 172375.71 | 4511.92 |

CP-C340-2

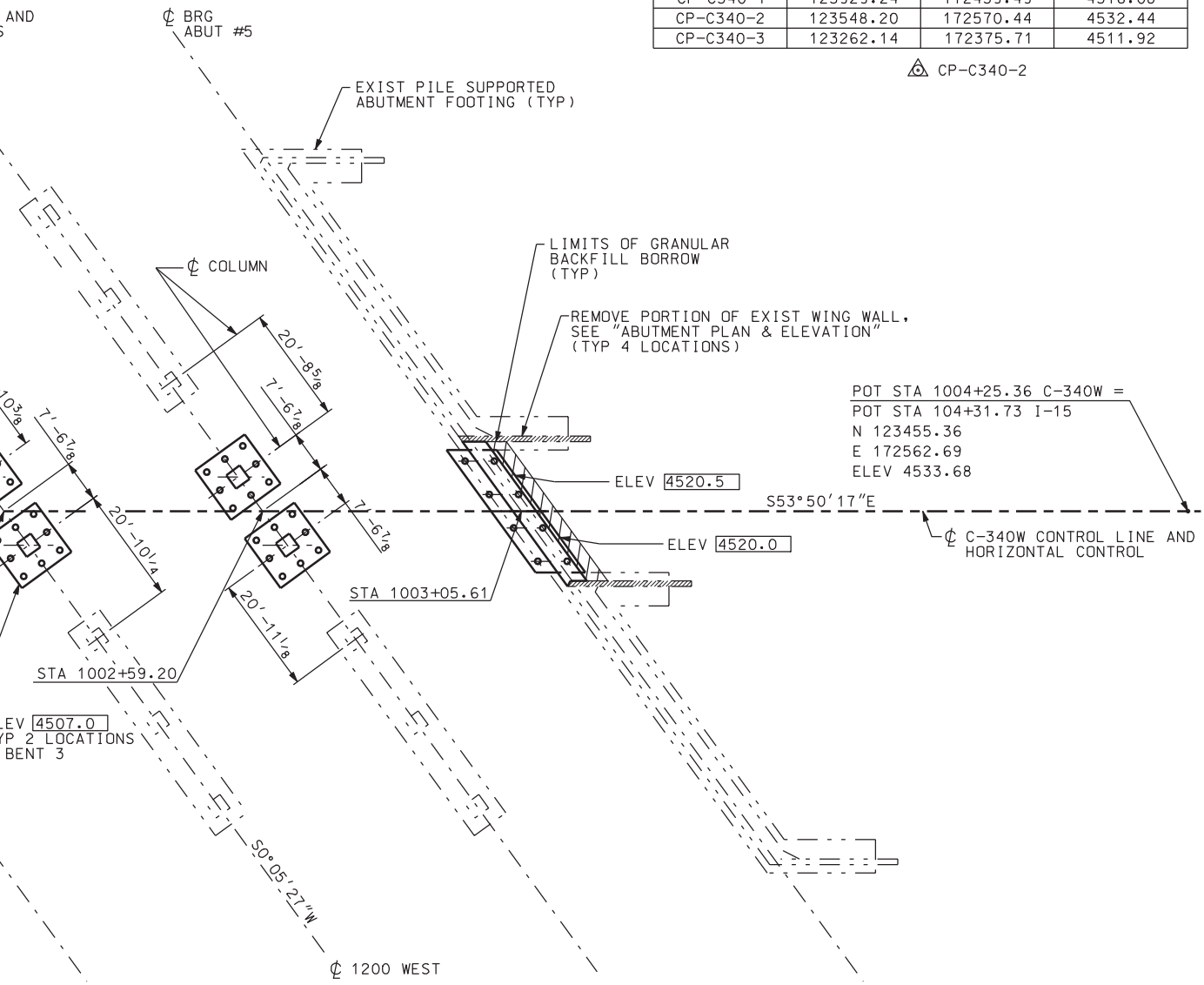


ON PLAN

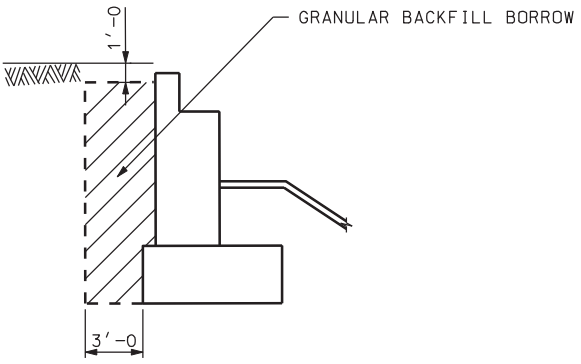


AT ABUTMENT

LIMITS OF GRANULAR BACKFILL BORROW

## NOTES

1. ELEVATIONS AT THE BOTTOM OF FOOTING ARE SHOWN ENCLOSED IN RECANGLES E.G. 4501.00 .
2. SEE "DRIVEN PILE DETAILS" SHEET FOR PILE DETAILS.
3. LOCATE ℄ NEW COLUMNS ON THE "BEST FIT" LINE BETWEEN EXISTING COLUMNS.
4. ALIGN FRONT FACE OF ABUTMENT WALL ON THE "BEST FIT" LINE BETWEEN FRONT FACES OF THE EXISTING ABUTMENT WALLS.
5. GRANULAR BACKFILL BORROW HEIGHT IS COMPUTED FROM THE BOTTOM OF THE ABUTMENT TO THE BOTTOM OF THE APPROACH SLAB.
6. PROVIDE SOIL COVER OF MINIMUM 2'-0 FOR ALL FOOTINGS.
7. FIELD VERIFY NORTHING AND EASTING OF ALL CONTROL POINTS AS WELL AS THE RELATIVE ELEVATION DIFFERENCES BETWEEN ALL CONTROL POINTS. IF THE NORTHING, EASTING OR RELATIVE ELEVATION DIFFERENCES VARY BY MORE THAN ± 1" FROM WHAT IS GIVEN ON THIS SHEET, REPORT DISCREPANCIES TO THE ENGINEER AND STOP ALL CONSTRUCTION UNTIL DISCREPANCIES ARE RESOLVED.
8. BOTTOM OF FOOTING ELEVATIONS SHOWN AT ABUTMENTS ARE SHOWN AS REFERENCE. MATCH BOTTOM OF NEW ABUTMENT FOOTING WITH EXISTING.

| NO. | DATE | BY | REMARKS |
|---|---|---|---|

REVISIONS

UTAH DEPARTMENT OF TRANSPORTATION
SALT LAKE CITY, UTAH
STRUCTURES DIVISION

DESIGN KTF 09/04 CHECK PBB 09/04
DRAWN BLP 09/04 CHECK PBB 09/04
QUANT. CHECK

APPROVAL RECOMM. DATE SENIOR DESIGN ENGR.
APPROVED FOR USE BY UDOT DATE UDOT BRIDGE ENGR.

I-15; CORRIDOR IN UTAH COUNTY
NORTH LEHI INTERCHANGE
FOUNDATION PLAN
PROJECT NUMBER SP-15-6(52)241

UTAH
COUNTY

C-340W
DRG. NO.

SHT. 6 OF 28

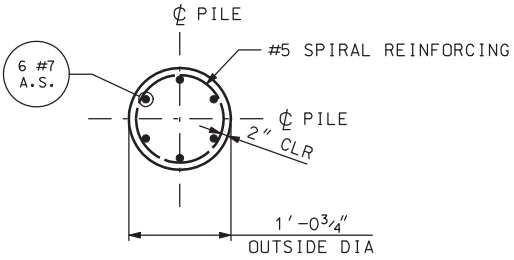


## SECTION A-A

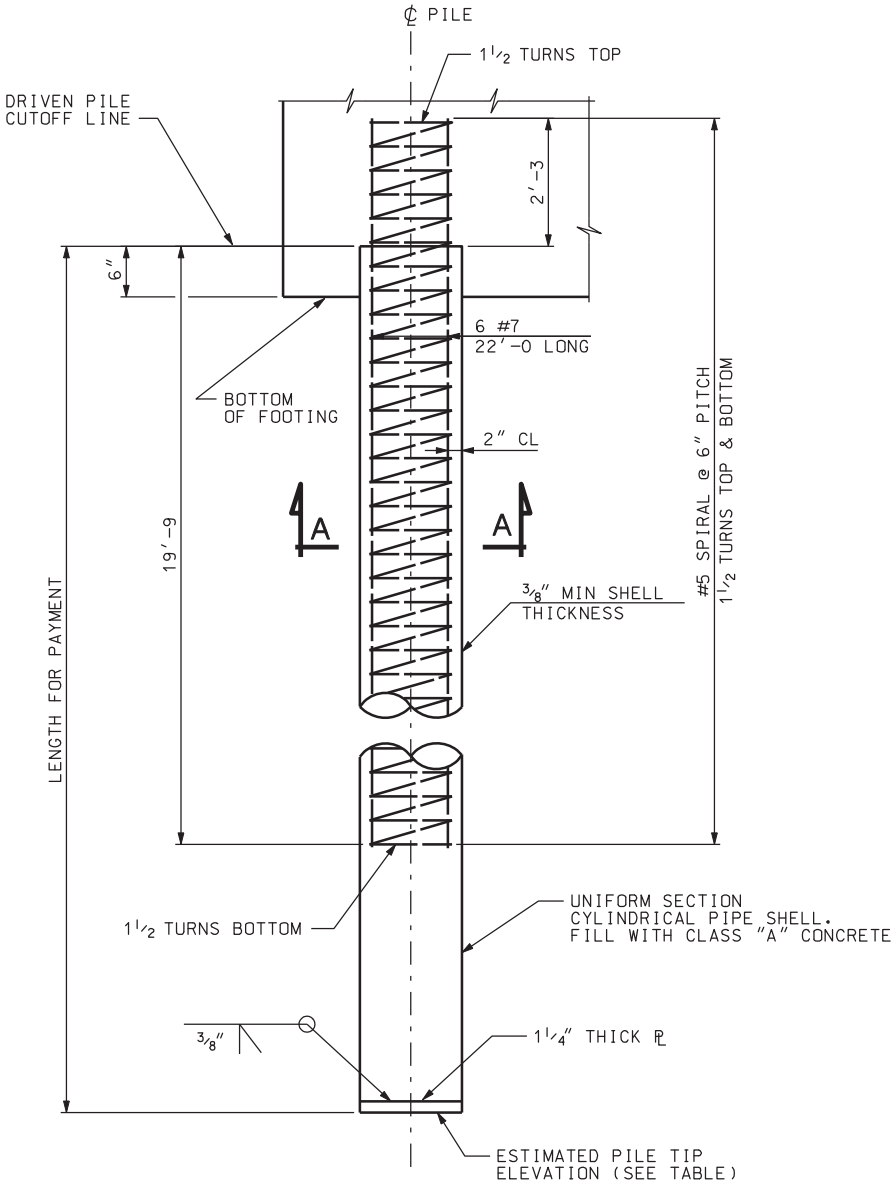


## ELEVATION

| PIL | | | |
|---|---|---|---|
| LOCATION | ESTIMATED PILE TIP ELEV (FEET) | ELEV OF MIN ACCEPTABLE PILE PENETRATION (FEET) | |
| ABUT #1 | 4436.0 | 4436.0 | |
| BENT #2 | 4433.0 | 4436.0 | |
| BENT #3 | 4433.0 | 4436.0 | |
| BENT #4 | 4431.0 | 4436.0 | |
| ABUT #5 | 4436.0 | 4436.0 | |

NOTE: SERVICE I PILE RESISTANCE WAS DETER

DGN File:IP_PWPcdms1717\4433_C-340-07_PILE01.dgn
02-MAY-2005

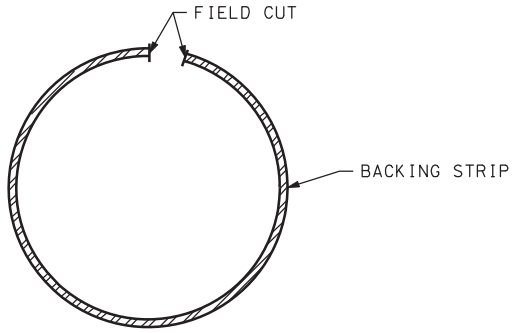


## NOTE

FIELD CUT PIECE OF PILE SO WHEN COMPRESSED IT WILL SLIDE INSIDE PILE SECTIONS.

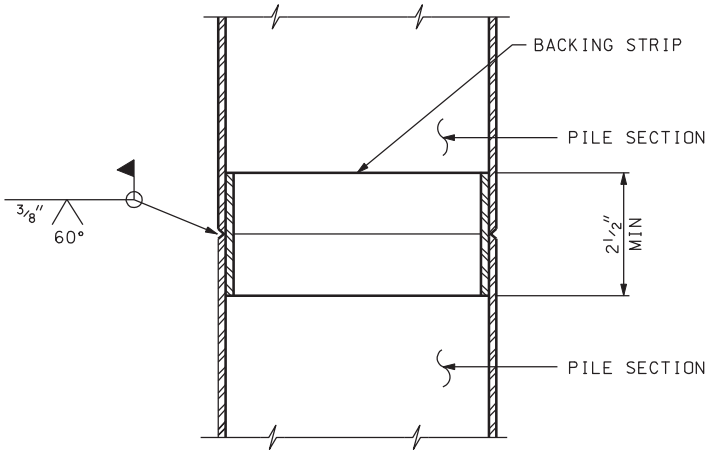


## SPLICE DETAIL

USE FULL STRENGTH WELDED SPLICES.

## NOTES

1. FILL PILE SHELLS WITH CLASS "A" CONCRETE.
2. HOLD REINFORCING STEEL ADEQUATELY IN FINAL POSITION DURING PLACEMENT OF CONCRETE AROUND BARS.
3. USE PILES MEETING ASTM A252 GRADE 3 WITH A MINIMUM YIELD STRENGTH OF 45 KSI.
4. PILE TIP ELEVATIONS ARE APPROXIMATE. VERIFY THESE ELEVATIONS AT THE TIME OF CONSTRUCTION IN ACCORDANCE WITH THE SPECIFICATIONS.
5. USE UNCOATED REINFORCEMENT FOR PILE EMBEDDED REINFORCEMENT.
6. USE A PILE HAMMER WITH A MINIMUM RATED ENERGY OF 30 KIP-FT.

E DATA

| SERVICE I PILE RESISTANCE (Kips) | STRENGTH I PILE RESISTANCE (Kips) | REQUIRED DRIVING RESISTANCE (Kips) | AS CONST. PILE TIP ELEV (FEET) |
|---|---|---|---|
| 251 | 174 | 276 | |
| 241 | 168 | 266 | |
| 207 | 145 | 232 | |
| 208 | 146 | 233 | |
| 218 | 151 | 244 | |

MINED ASSUMING TOLERABLE SETTLEMENT OF 1 INCH.

| NO. | DATE | BY | REMARKS |
|---|---|---|---|

REVISIONS

UTAH DEPARTMENT OF TRANSPORTATION
SALT LAKE CITY, UTAH
STRUCTURES DIVISION

DESIGN PBB 10/04 CHECK JAR 10/04
DRAWN RDF 10/04 CHECK KMR 10/04
QUANT. PBB 11/04 CHECK KMR 11/04

APPROVAL RECOMM. DATE SENIOR DESIGN ENGR.
APPROVED FOR USE BY UDOT DATE UDOT BRIDGE ENGR.

I-15; CORRIDOR IN UTAH COUNTY
NORTH LEHI INTERCHANGE
DRIVEN PILE DETAILS

PROJECT NUMBER SP-15-6(52)241

UTAH
COUNTY

C-340W
DRG. NO.

SHT. 7 OF 28

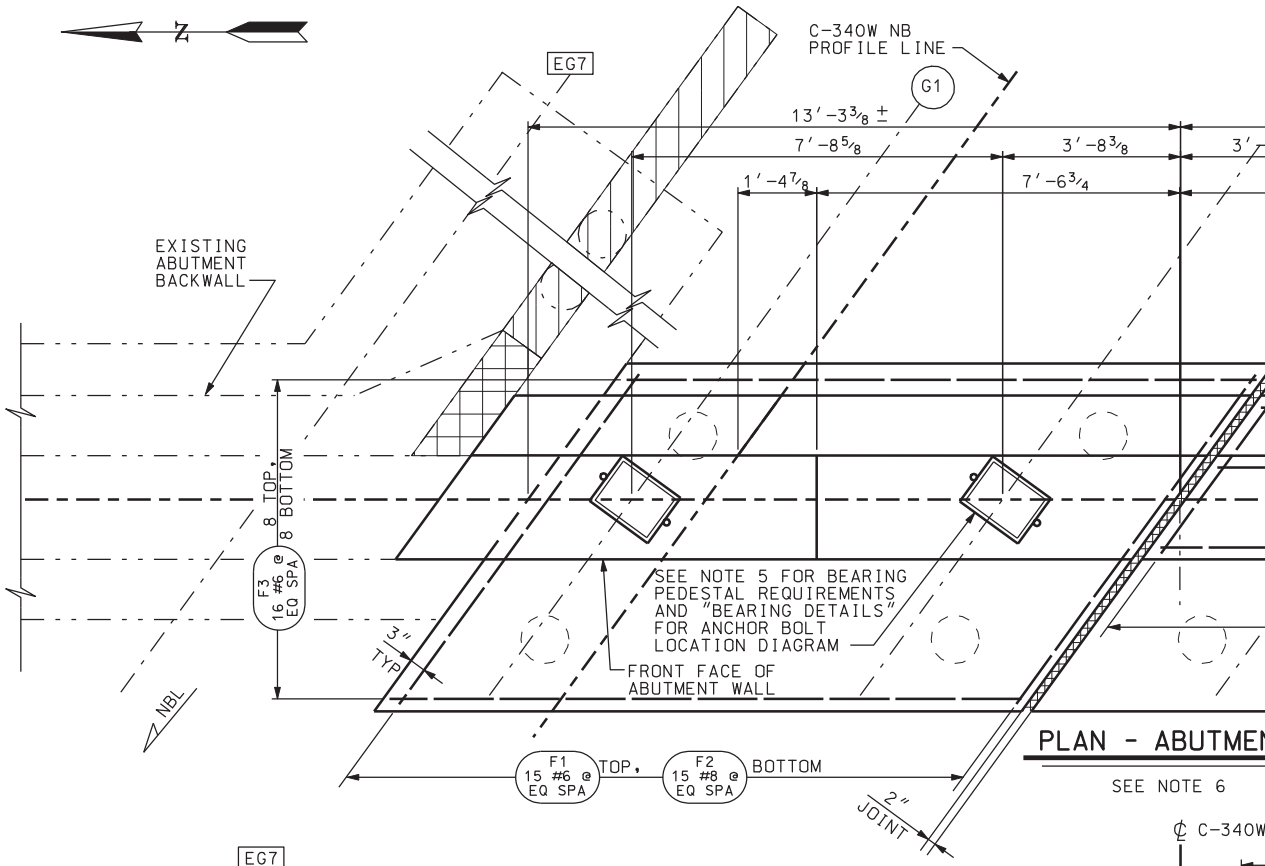


PLAN - ABUTMEN

SEE NOTE 6

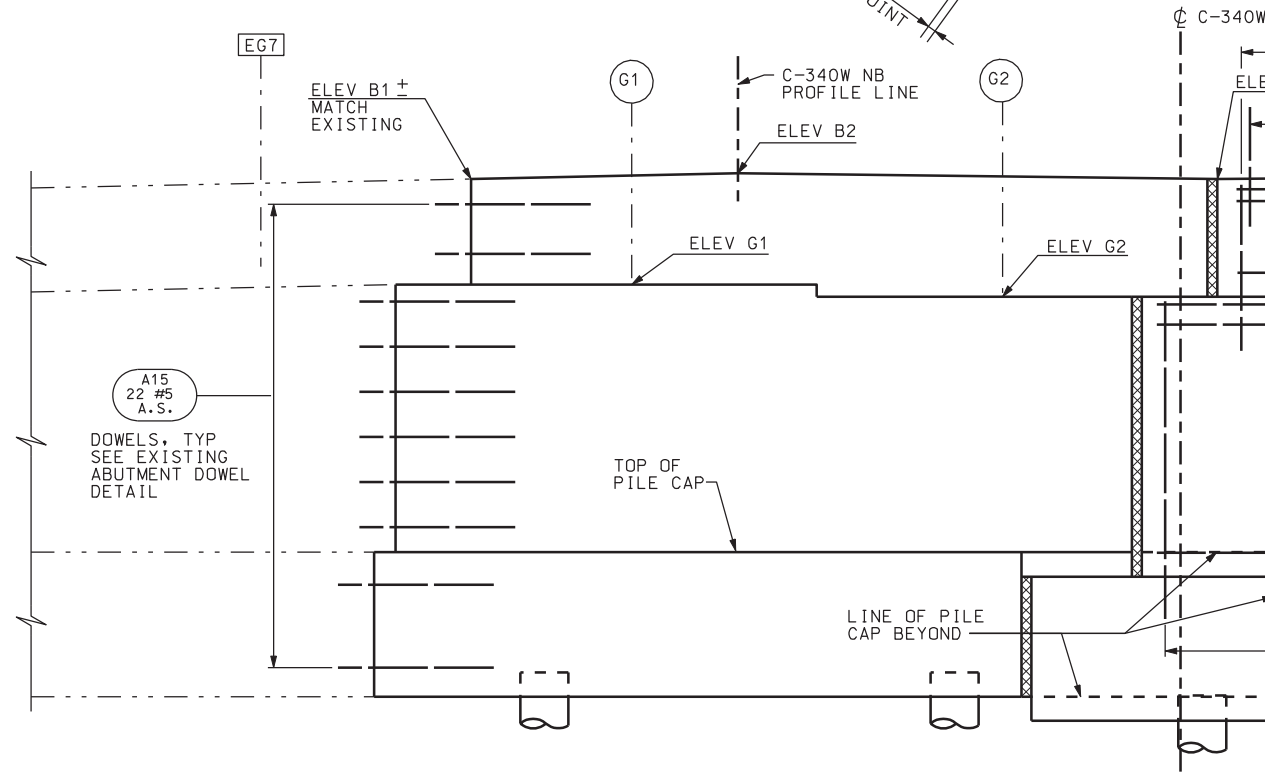


ELEVATION - AI

SEE NOTE

## ELEVATION SCHEDULE (SEE NOTE 5)

| | ELEV G1 | ELEV G2 | ELEV G3 | ELEV G4 | ELEV B1 | ELEV B2 | ELEV B3 | ELEV B4 | ELEV B5 |
|---|---|---|---|---|---|---|---|---|---|
| ABUT #1 | 4529.66 | 4529.61 | 4529.64 | 4529.74 | 4532.03 | 4532.10 | 4531.98 | 4532.17 | 4532.13 |
| ABUT #5 | 4530.39 | 4530.33 | 4530.33 | 4530.41 | 4532.79 | 4532.86 | 4532.70 | 4532.87 | 4532.82 |

DGN File:IP_PWPcdms1717\4433_C-340-08_ABUT01.dgn
02-MAY-2005

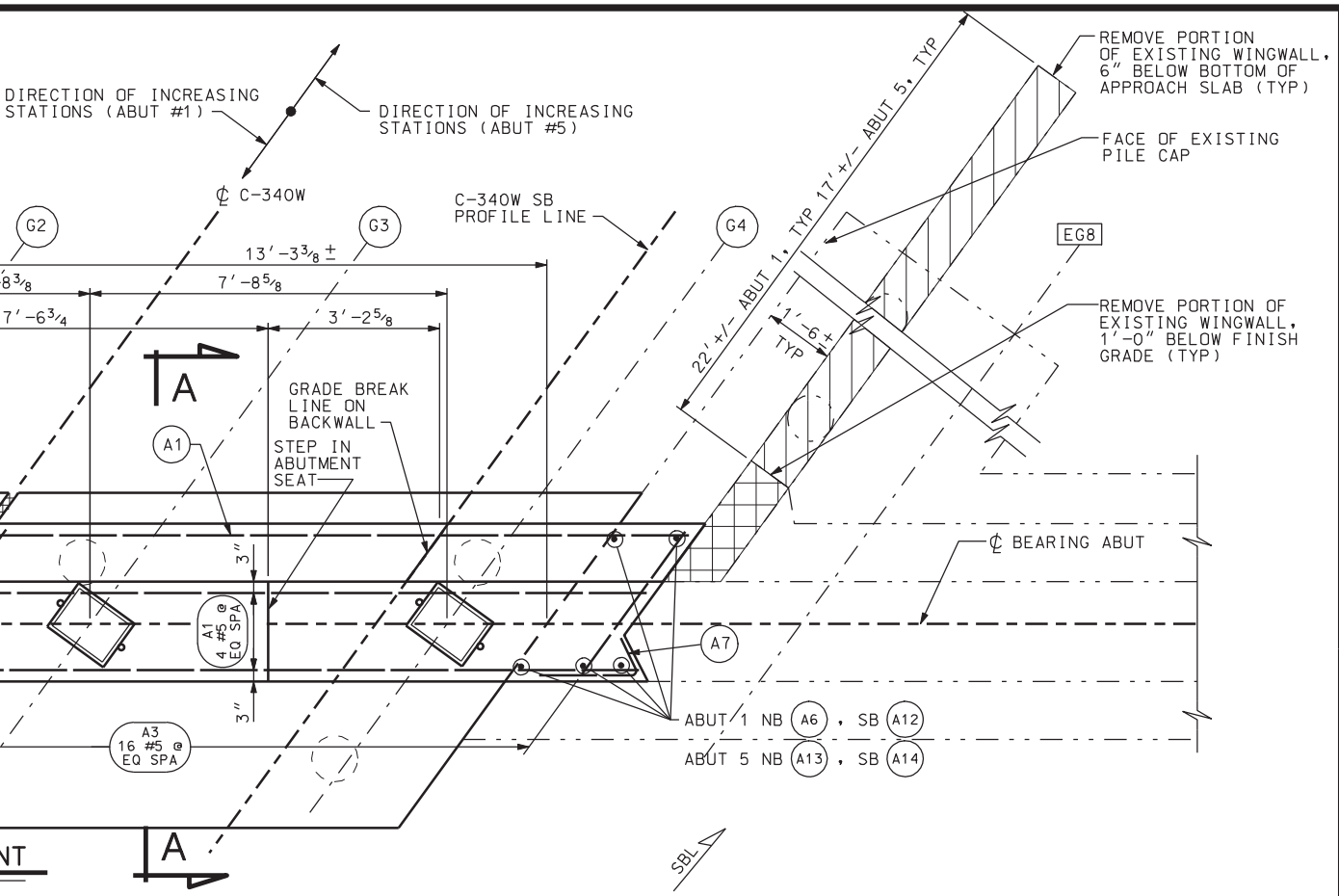


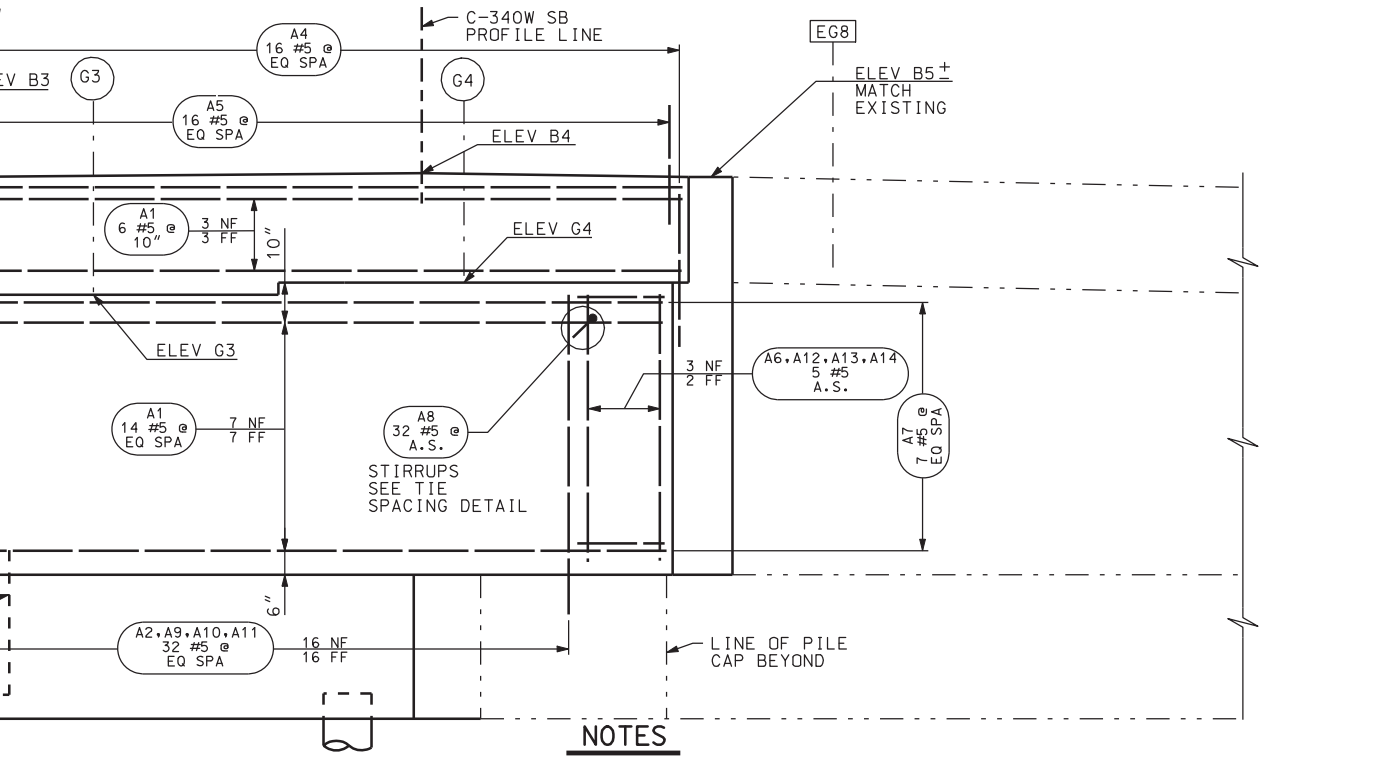


BUTMENT

6

## NOTES

1. FOR SECTIONS AND DETAILS, SEE "ABUTMENT DETAILS" SHEET.
2. FOR PILE LAYOUT AND BOTTOM OF FOOTING ELEVATIONS, SEE "FOUNDATION PLAN". BOTTOM OF FOOTING ELEVATIONS ARE APPROXIMATE. MATCH EXISTING BOTTOM OF FOOTING ELEVATIONS.
3. FOR BEARING AND ANCHOR BOLT DETAILS, SEE "BEARING DETAILS".
4. NF INDICATES NEAR FACE; FF INDICATES FAR FACE. ADJUST SPACING OF PILE CAP REINFORCING UP TO 4" TO ACCOMMODATE PILE REINFORCING.
5. PROVIDE BEARING PEDESTAL 1'-6 x 1'-2 AT EACH BEARING LOCATION. FINISH THE CONCRETE HIGH. RUB OR GRIND THE PEDESTAL SMOOTH AND LEVEL TO THE SPECIFIED ELEVATION.
6. ABUTMENT 5 IS SHOWN. ABUTMENT 1 IS SIMILAR. PILE CAP REINFORCING SHOWN FOR THE NORTH WIDENING APPLIES IN A SIMILAR MANNER TO THE SOUTH WIDENING. WALL REINFORCING SHOWN FOR SOUTH WIDENING APPLIES IN A SIMILAR MANNER TO THE NORTH WIDENING.

| QUANTITIES STRUCTURAL CONCRETE | |
|---|---|
| ABUTMENT 1 & 5 | 98.2 CY |

| NO. | DATE | BY | REMARKS |
|---|---|---|---|
| | | | |

REVISIONS

UTAH DEPARTMENT OF TRANSPORTATION
SALT LAKE CITY, UTAH
STRUCTURES DIVISION

DESIGN JAR 10/04 CHECK KTF 10/04
DRAWN BLP 10/04 CHECK PBB 11/04
QUANT. KTF 10/04 CHECK JW 11/04

APPROVAL RECOMM. DATE SENIOR DESIGN ENGR.
APPROVED FOR USE BY UDOT DATE UDOT BRIDGE ENGR.

I-15; CORRIDOR IN UTAH COUNTY
NORTH LEHI INTERCHANGE
ABUTMENT PLAN & ELEVATION

PROJECT NUMBER SP-15-6(52)241

UTAH
COUNTY

C-340W
DRG. NO.

SHT. 8 OF 28

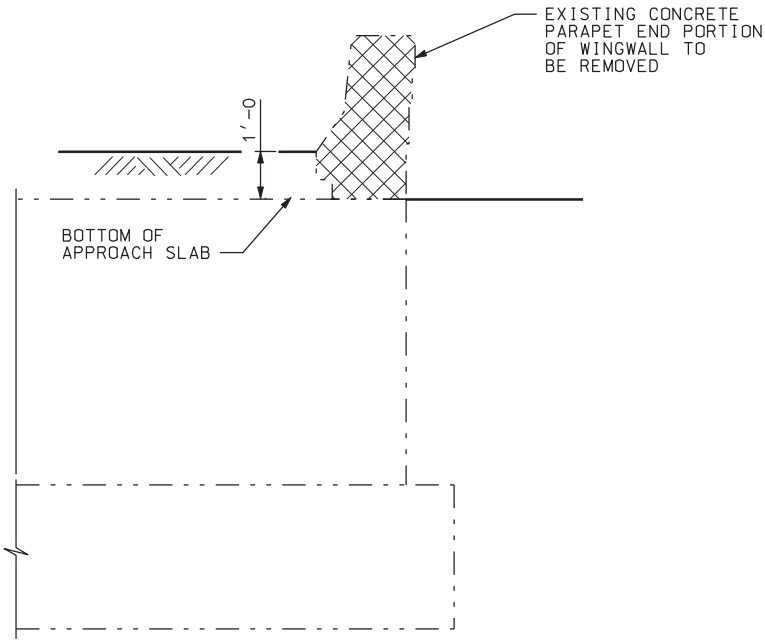


SECTION AT BACKWALL

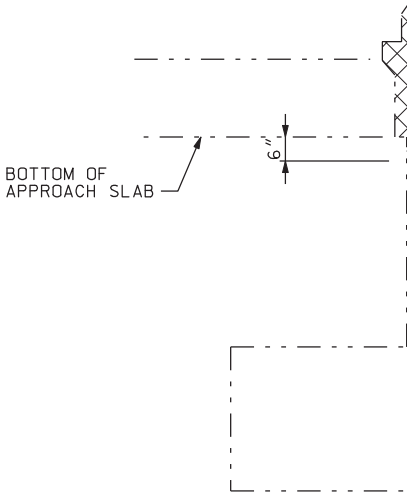


SECTION BEHIND

## WINGWALL REMOVAL DETAILS

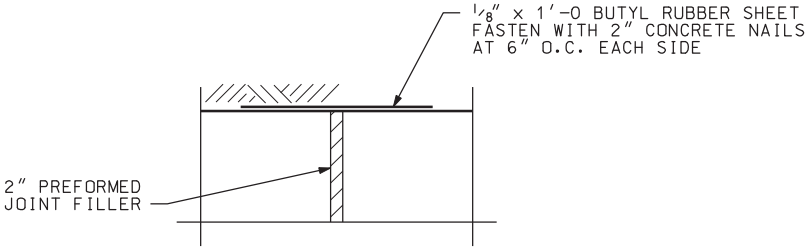


## CONTRACTION JOINT DETAIL

USE RUBBER SHEET ON FACES OF JOINT IN CONTACT WITH SOIL

## EPOXY ANCHORAGE NOTE

USE APPROVED EPOXY ANCHORAGE TO DEVELOP
PULLOUT STRENGTH OF 18.6 KIPS. 11 INCHE
ASSUMED IN SIZING THE REINFORCEMENT. DR
PREPARATION FOR ANCHORAGE OF REINFORCEME
CONCRETE REMOVAL ARE INCIDENTAL TO THE C
BID ITEM "PREPARE BRIDGE FOR WIDENING".

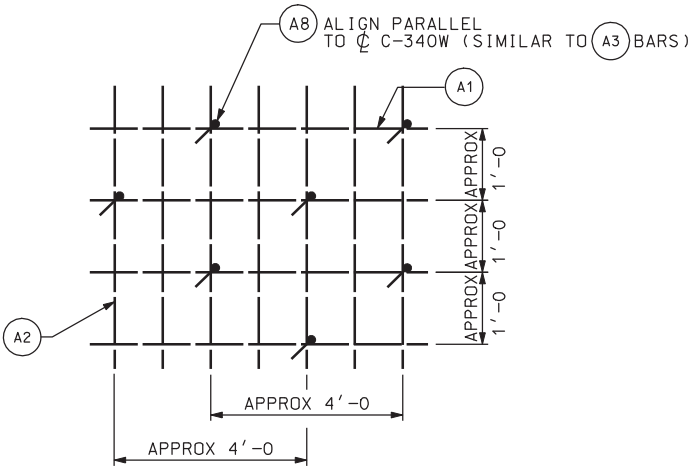


## TIE SPACING DETAIL

DGN File:IP_PWPcdms1717\4433_C-340-09_ABUTDT01.dgn
02-MAY-2005

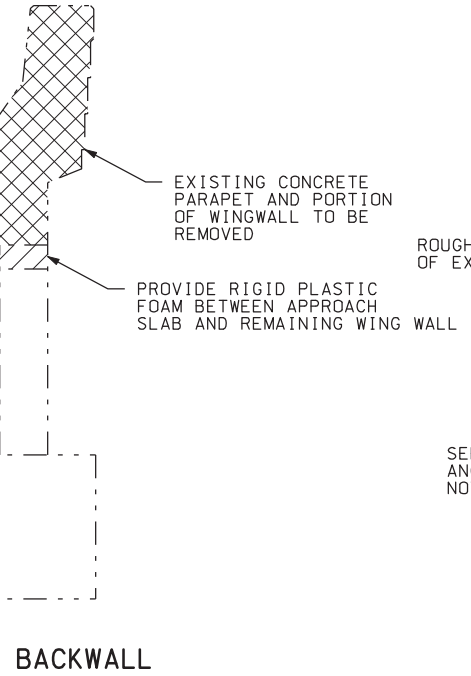


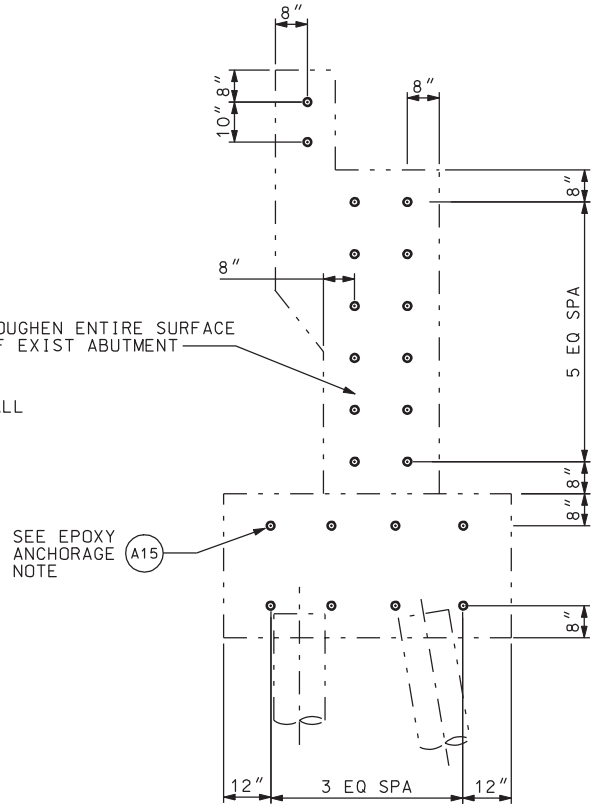


NOTE:

REMOVE UNSOUND AND SPALLED CONCRETE TO DEPTH APPROVED BY THE ENGINEER.

EXISTING ABUTMENT DOWEL DETAIL

A MINIMUM
S EMBEDMENT IS
RILLING AND
NT AND
COST FOR THE

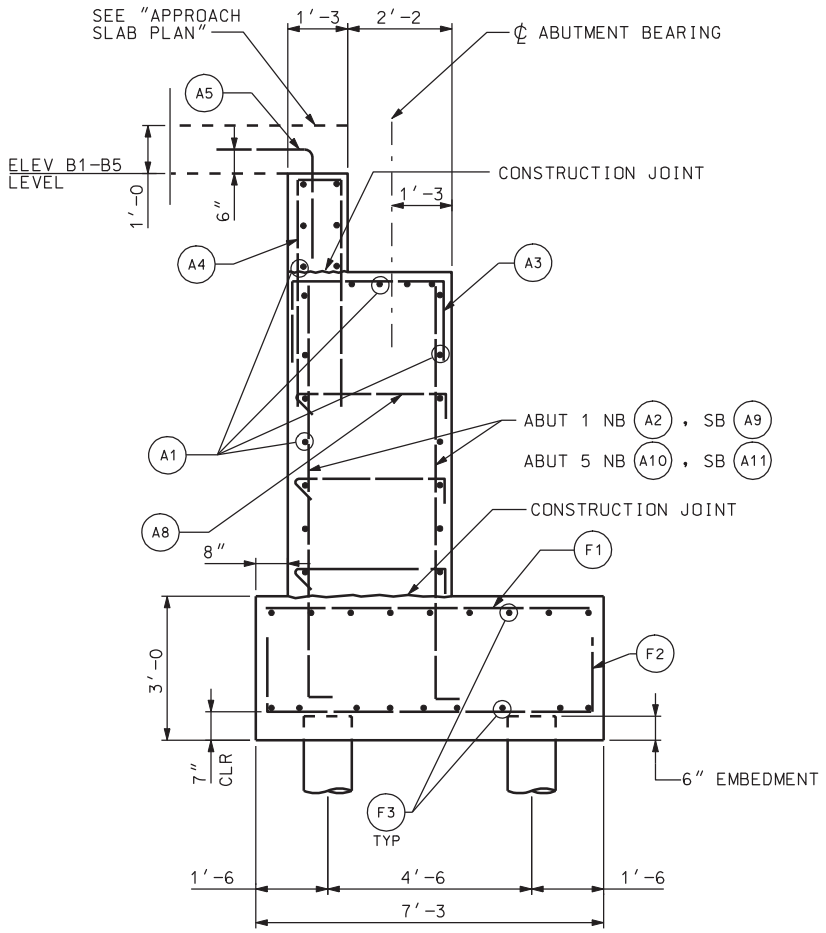


SECTION A-A

| NO. | DATE | BY | REMARKS |
|---|---|---|---|
| | | | |

REVISIONS

UTAH DEPARTMENT OF TRANSPORTATION
SALT LAKE CITY, UTAH
STRUCTURES DIVISION

DESIGN JAR 10/04 CHECK KTF 10/04
DRAWN BLP 10/04 CHECK PBB 10/04
QUANT. KTF 10/04 CHECK JW 10/04

APPROVAL RECOMM. DATE SENIOR DESIGN ENGR.
APPROVED FOR USE BY UDOT DATE UDOT BRIDGE ENGR.

I-15; CORRIDOR IN UTAH COUNTY
NORTH LEHI INTERCHANGE
ABUTMENT DETAILS

PROJECT NUMBER SP-15-6(52)241

UTAH
COUNTY

C-340W
DRG. NO.

SHT. 9 OF 28

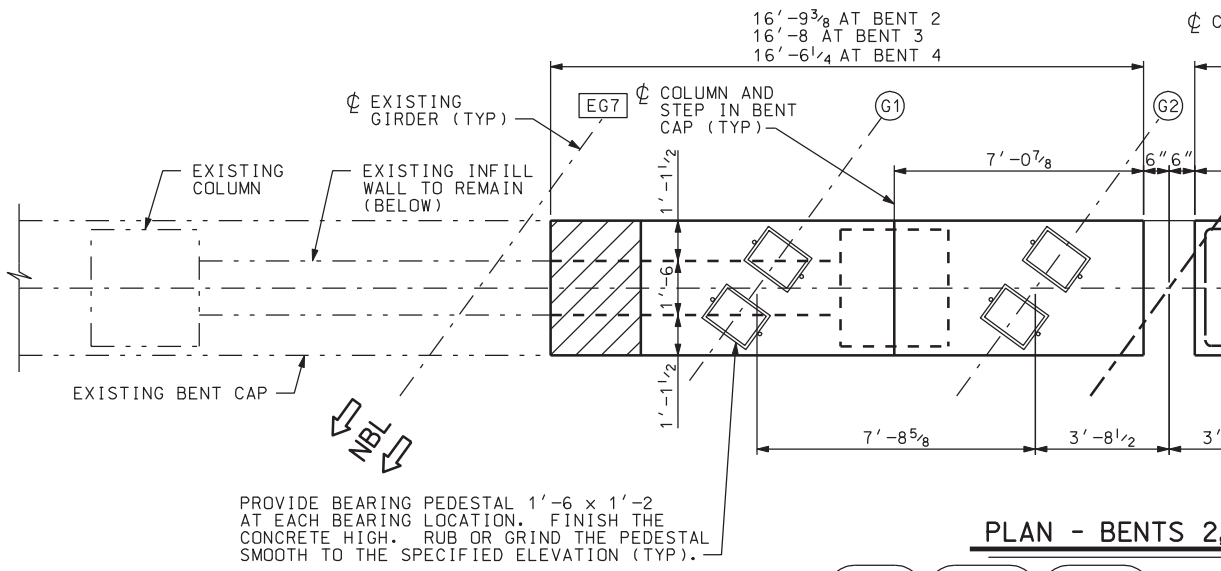


PLAN - BENTS 2,

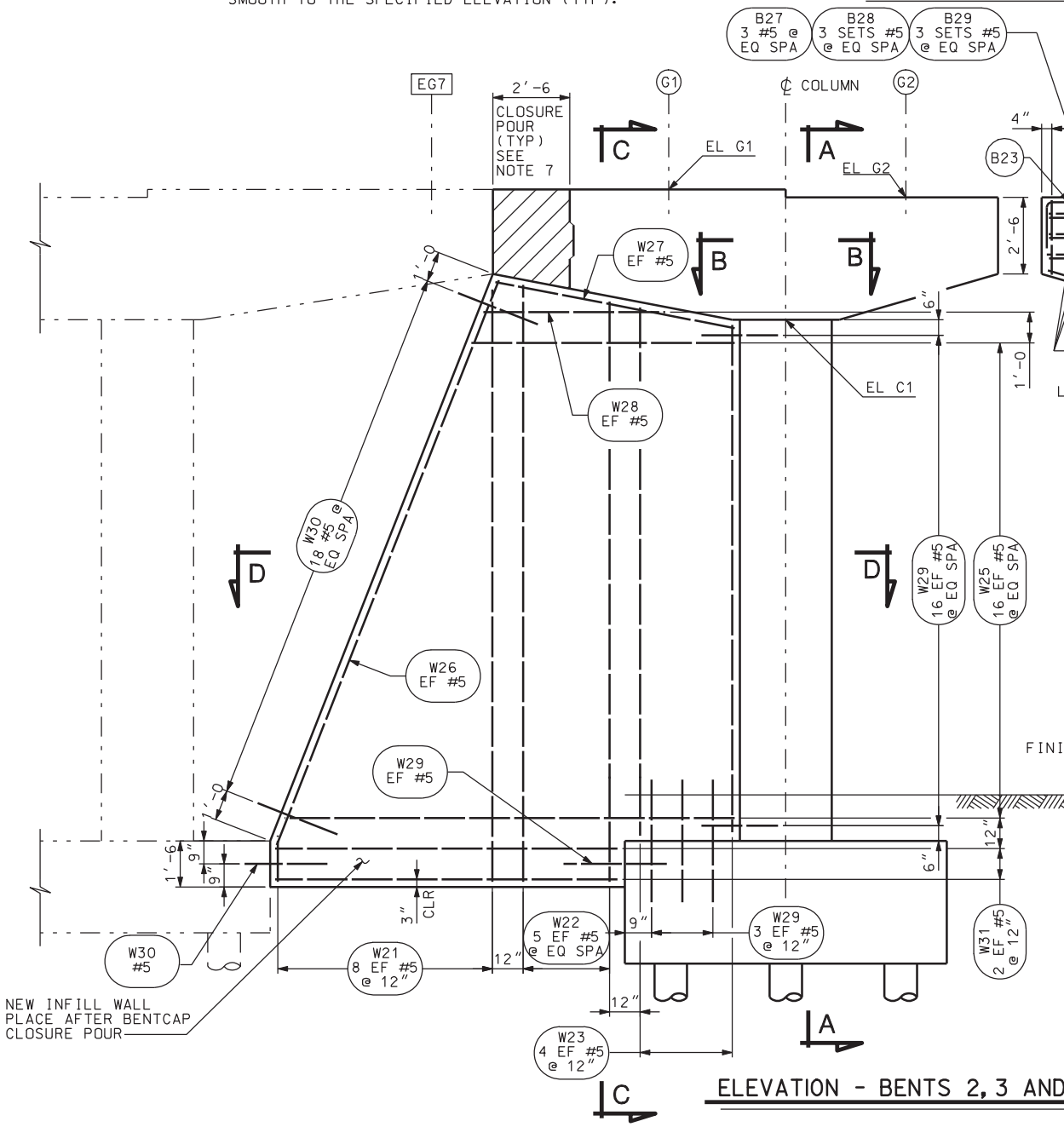


ELEVATION - BENTS 2, 3 AND

WALL REINFORCING SHOWN FOR NORTH WIDENING
CAP REINFORCING STEEL SHOWN FOR SOUTH BEN

DGN File: IP_PWPcdns1717\4433_C-340-10_BENT01.dgn

02-MAY-2005

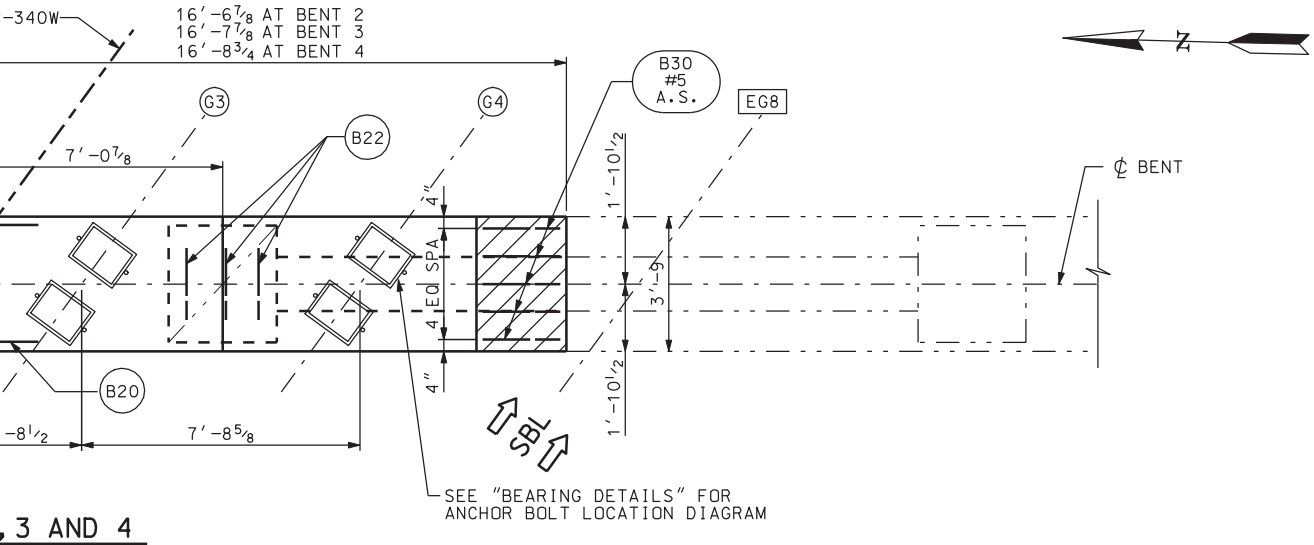


## , 3 AND 4

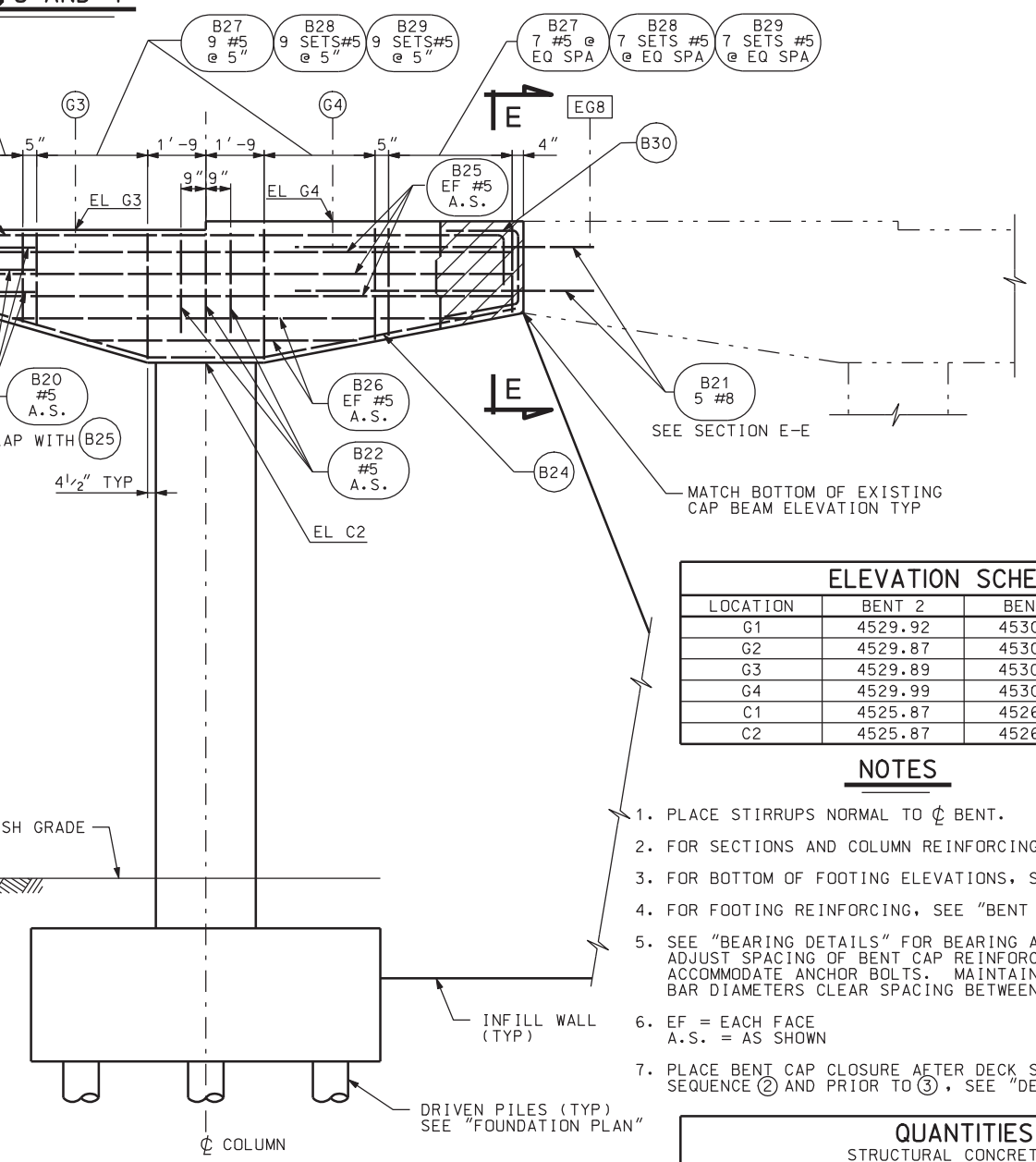


## ELEVATION SCHEDULE

| LOCATION | BENT 2 | BENT 3 | BENT 4 |
|---|---|---|---|
| G1 | 4529.92 | 4530.14 | 4530.29 |
| G2 | 4529.87 | 4530.08 | 4530.23 |
| G3 | 4529.89 | 4530.10 | 4530.24 |
| G4 | 4529.99 | 4530.19 | 4530.33 |
| C1 | 4525.87 | 4526.08 | 4526.23 |
| C2 | 4525.87 | 4526.08 | 4526.23 |

## NOTES

1. PLACE STIRRUPS NORMAL TO ℄ BENT.
2. FOR SECTIONS AND COLUMN REINFORCING, SEE "BENT DETAILS".
3. FOR BOTTOM OF FOOTING ELEVATIONS, SEE "FOUNDATION PLAN".
4. FOR FOOTING REINFORCING, SEE "BENT FOOTING DETAILS".
5. SEE "BEARING DETAILS" FOR BEARING AND ANCHOR BOLT DETAIL. ADJUST SPACING OF BENT CAP REINFORCING UP TO 4" TO ACCOMMODATE ANCHOR BOLTS. MAINTAIN AT LEAST THREE BAR DIAMETERS CLEAR SPACING BETWEEN BARS.
6. EF = EACH FACE
   A.S. = AS SHOWN
7. PLACE BENT CAP CLOSURE AFTER DECK SLAB POUR SEQUENCE 2 AND PRIOR TO 3, SEE "DECK SLAB PLAN".

## QUANTITIES
STRUCTURAL CONCRETE 3A

| LOCATION | BENT 2 | BENT 3 | BENT 4 |
|---|---|---|---|
| BENT CAP | 16.0 CY | 16.0 CY | 15.9 CY |
| COLUMN | 10.6 CY | 10.1 CY | 10.8 CY |
| INFILL WALL | 23.9 CY | 22.9 CY | 24.3 CY |
| TOTAL | 50.5 CY | 48.9 CY | 51.0 CY |

4

, SOUTH WIDENING SIMILAR.
T CAP, NORTH BENT CAP SIMILAR.

| NO. | DATE | BY | REMARKS |
|---|---|---|---|
| | | | |

REVISIONS

UTAH DEPARTMENT OF TRANSPORTATION
SALT LAKE CITY, UTAH
STRUCTURES DIVISION

DESIGN BM 10/04 CHECK KTF 10/04
DRAWN BLP 10/04 CHECK JW 10/04
QUANT. KTF 10/04 CHECK JW 11/04

APPROVAL RECOMM. DATE SENIOR DESIGN ENGR.
APPROVED FOR USE BY UDOT DATE UDOT BRIDGE ENGR.

I-15; CORRIDOR IN UTAH COUNTY
NORTH LEHI INTERCHANGE
BENT PLAN & ELEVATION

PROJECT NUMBER SP-15-6(52)241

UTAH
COUNTY

C-340W
DRG. NO.

SHT. 10 OF 28

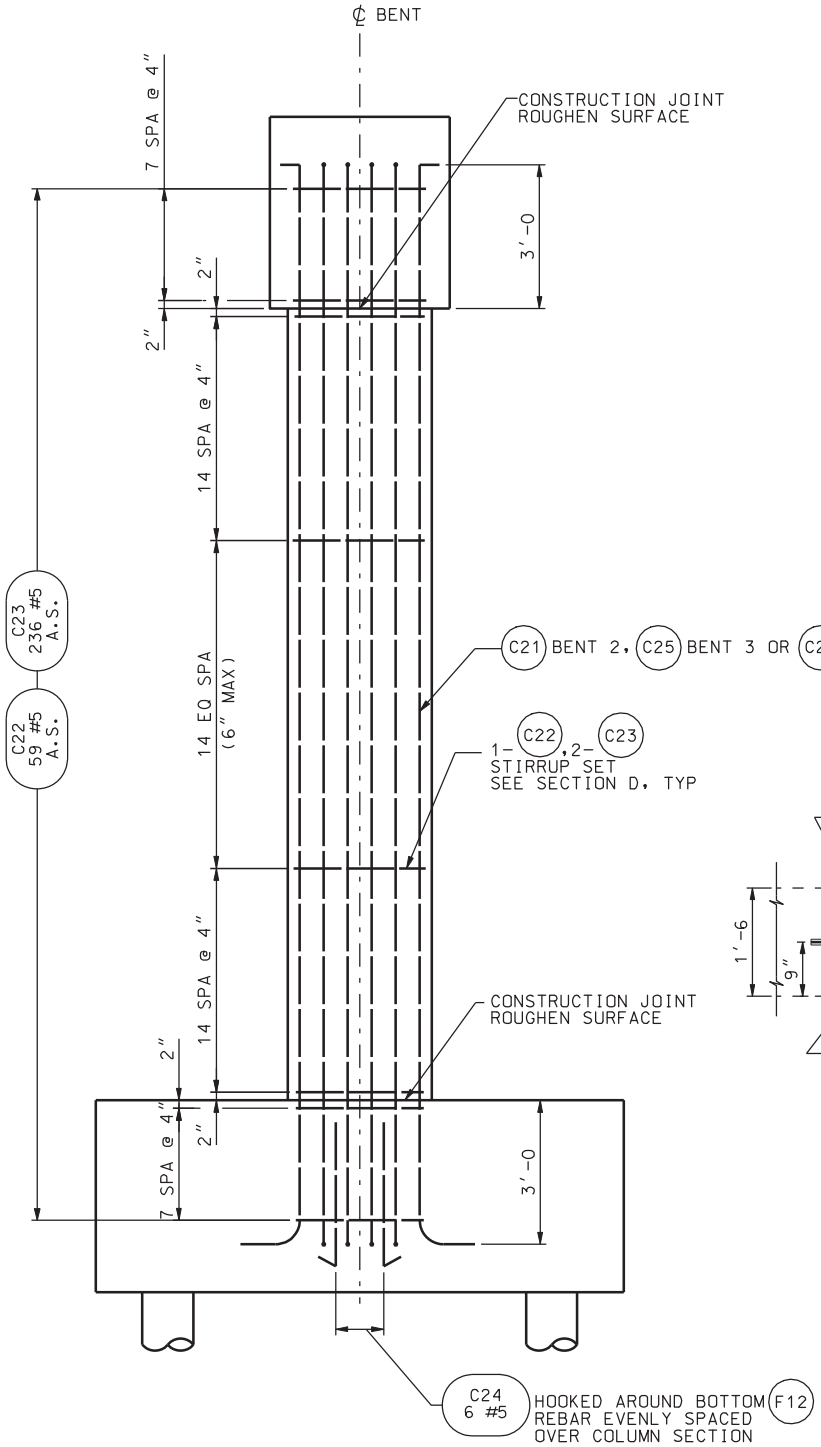


## SECTION A-A

SEE "BENT FOOTING DETAILS" FOR FOOTING REINFORCEMENT.

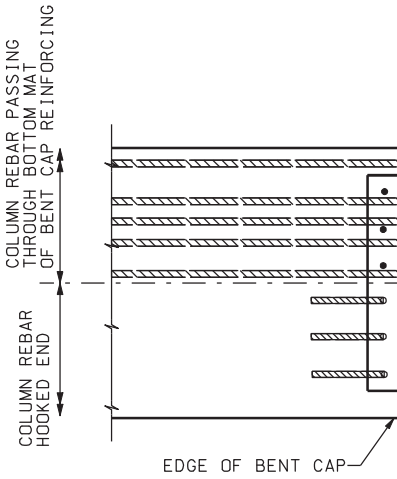


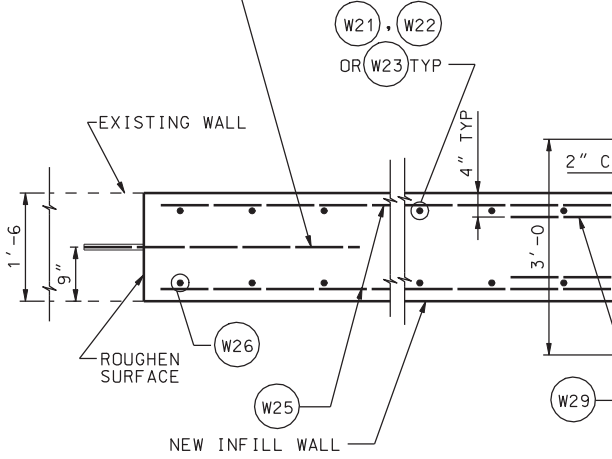


## SECTIO

## EPOXY ANCH

USE APPROVED EPOXY ANCHO
PULLOUT STRENGTH OF 47.4
ASSUMED IN SIZING THE RE
PREPARATION FOR ANCHORAG
CONCRETE REMOVAL ARE INC
BID ITEM "PREPARE BRIDGE

DGN File:IP_PWPcdms1717\4433_C-340-11_BENTDT01.dgn

02-MAY-2005

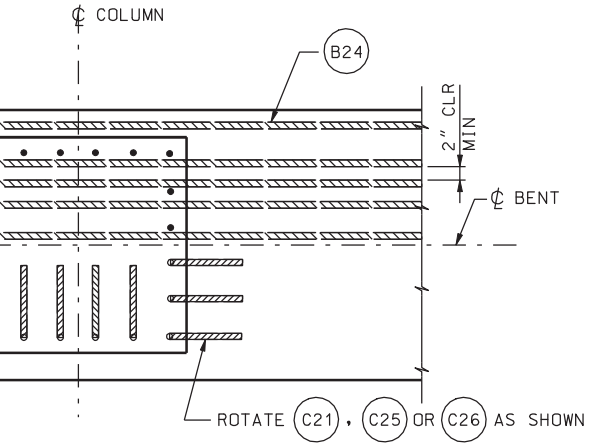


SECTION B-B

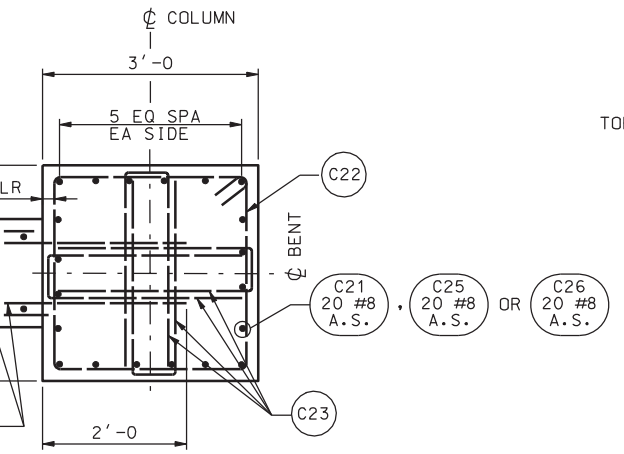


ON D-D

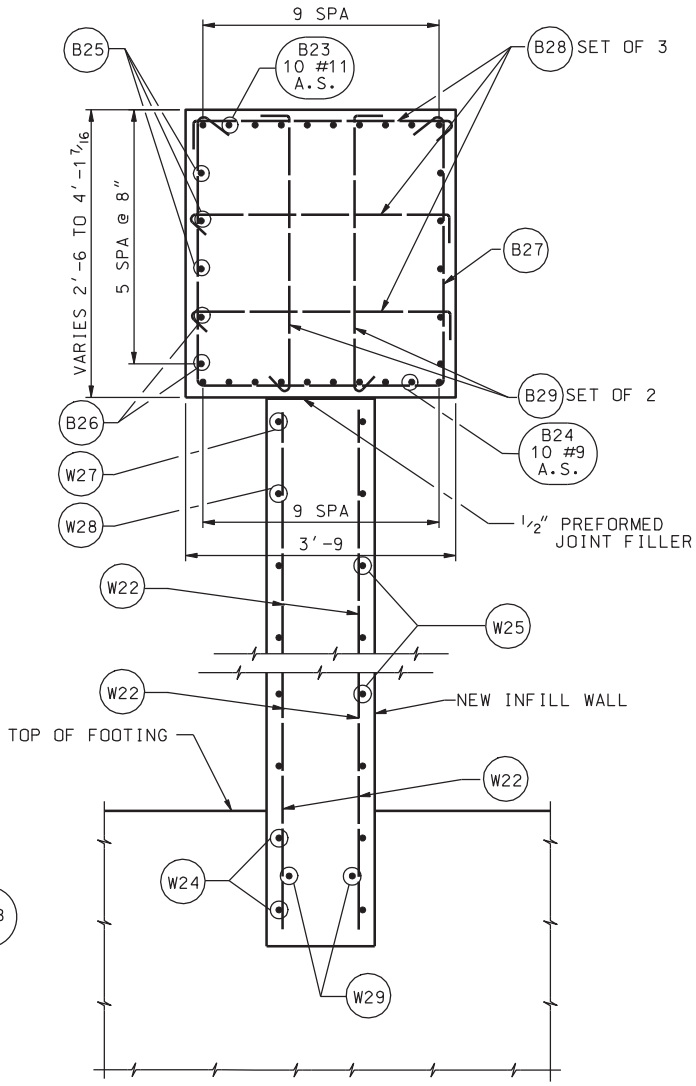


SECTION C-C

HORAGE NOTE

RAGE TO DEVELOP A MINIMUM
KIPS. 18 INCHES EMBEDMENT IS
INFORCEMENT. DRILLING AND
E OF REINFORCEMENT AND
IDENTAL TO THE COST FOR THE
FOR WIDENING".

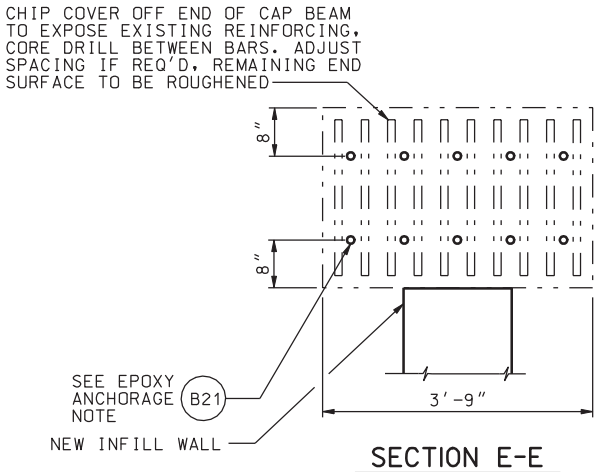


SECTION E-E

## NOTES

1. ADJUST SPACING OF PILE CAP AND BENT CAP REINFORCING UP TO 4" TO ACCOMMODATE COLUMN REINFORCING. MAINTAIN AT LEAST THREE BAR DIAMETER SPACING.
2. ADJUST HOOP AND TIE REINFORCING TO AVOID CONFLICT WITH BENT CAP REINFORCING.

| NO. | DATE | BY | REMARKS |
|---|---|---|---|

REVISIONS

UTAH DEPARTMENT OF TRANSPORTATION
SALT LAKE CITY, UTAH
STRUCTURES DIVISION

DESIGN BM 10/04 CHECK KTF 10/04
DRAWN BLP 10/04 CHECK JW 10/04
QUANT. KTF 10/04 CHECK JW 11/04

APPROVAL RECOMM. DATE SENIOR DESIGN ENGR.
APPROVED FOR USE BY UDOT DATE UDOT BRIDGE ENGR.

I-15; CORRIDOR IN UTAH COUNTY
NORTH LEHI INTERCHANGE
BENT DETAILS
PROJECT NUMBER SP-15-6(52)241

UTAH
COUNTY

C-340W
DRG. NO.

SHT. 11 OF 28

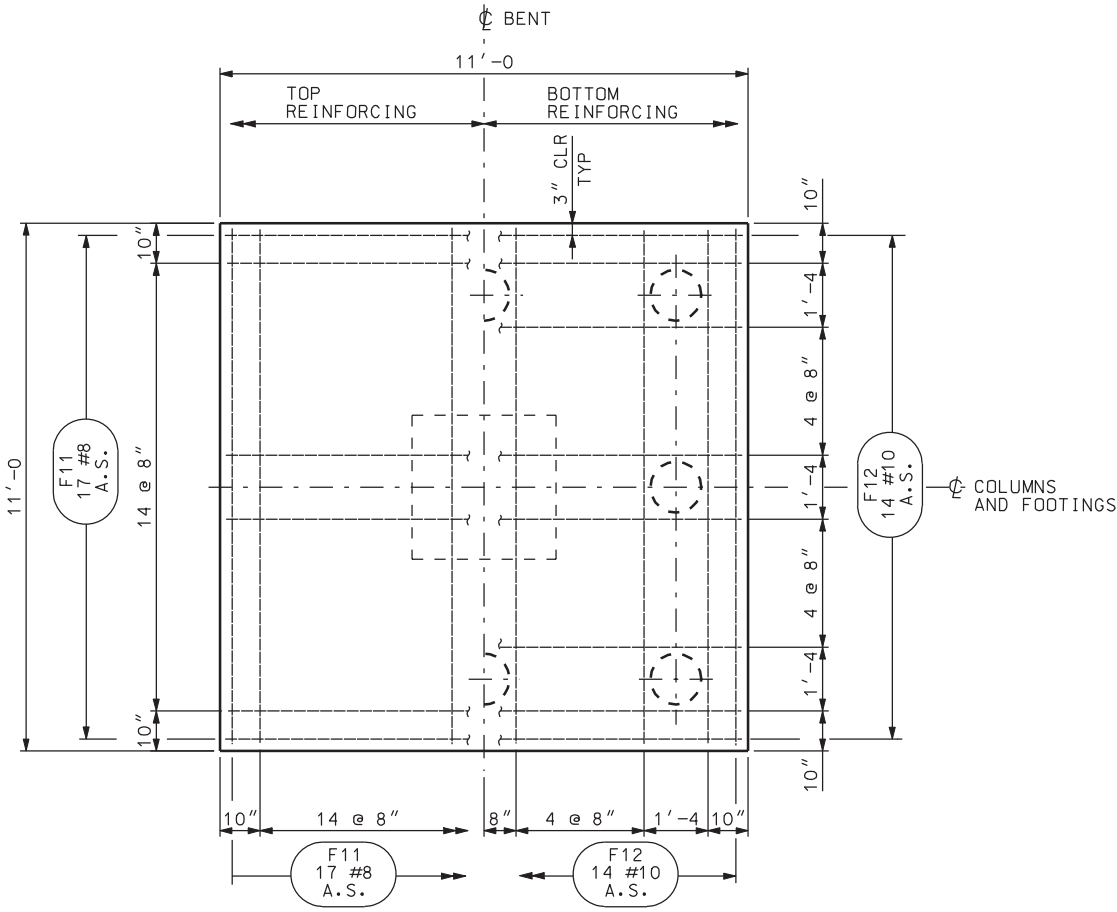


## FOOTING PLAN - BENTS 2 AND 3

ADJUST SPACING OF PILE CAP REINFORCEMENT UP TO 4" TO ACCOMMODATE COLUMN REINFORCEMENT AND PILE REINFORCEMENT.

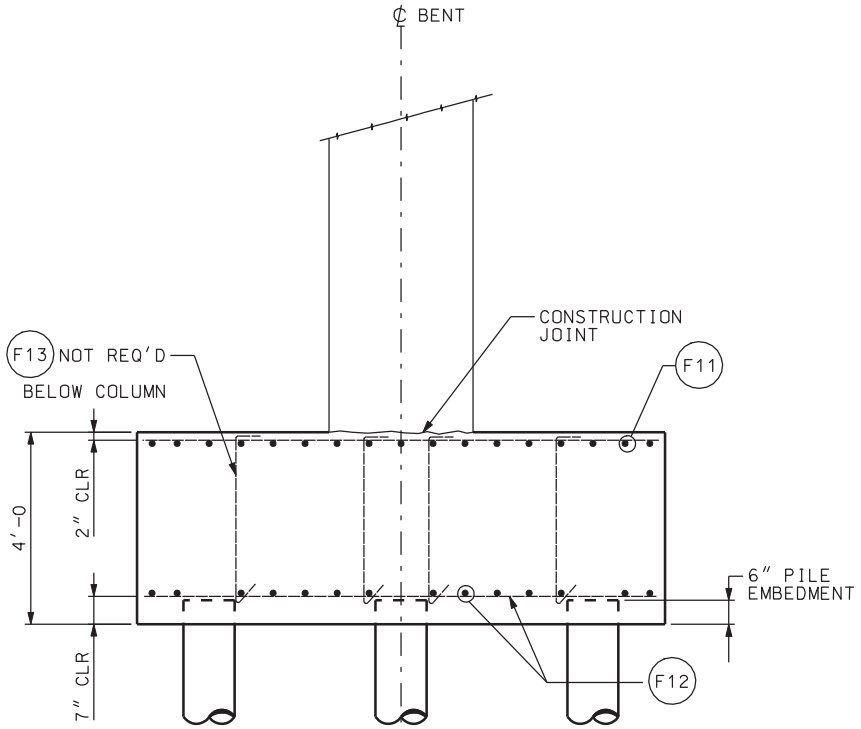


## ELEVATION - BENTS 2 AND 3

COLUMN AND PILE REINFORCEMENT NOT SHOWN FOR CLARITY.

DGN File:IP_PWPcdns1717\4433.C-340-12_BENTDT02.dgn
02-MAY-2005

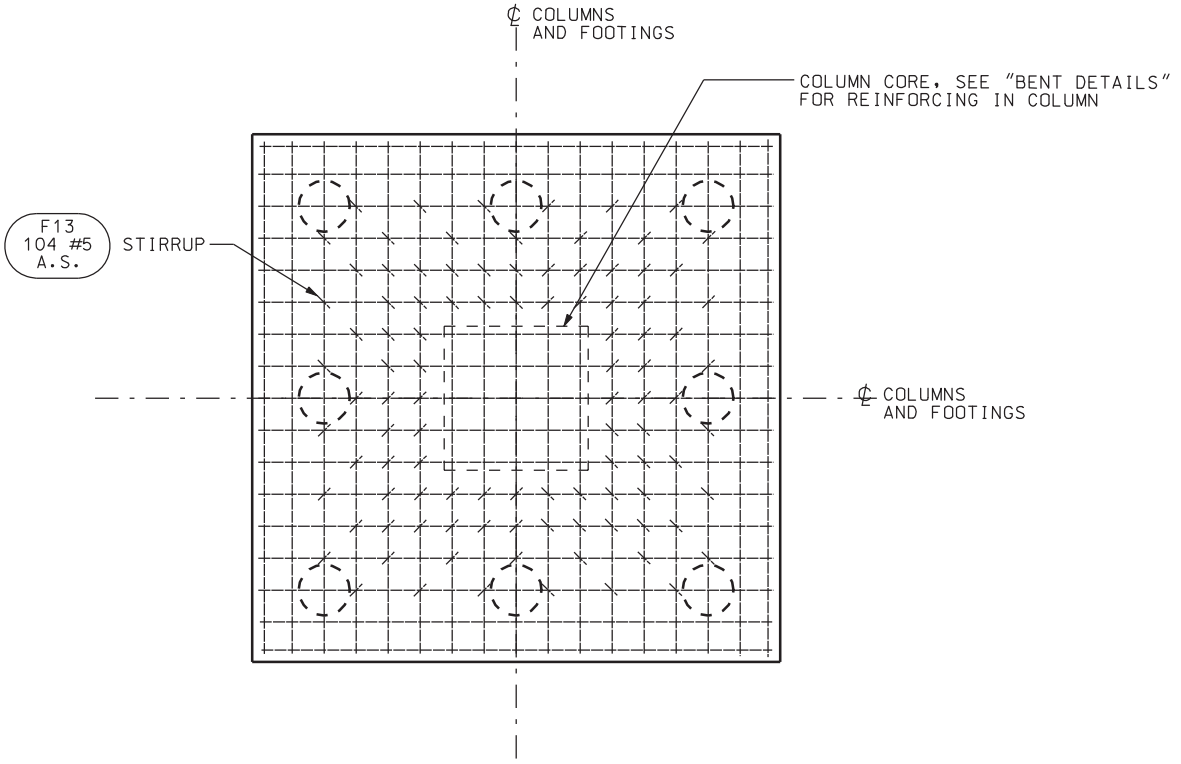


## FOOTING TIE SPACING

TOP REINFORCING SHOWN, HOOK BARS AROUND BOTTOM MAT OF REINFORCING AS SHOWN IN ELEVATION.

| QUANTITIES | |
|---|---|
| STRUCTURAL CONCRETE | |
| BENTS 2, 3 & 4 (6 FOOTINGS) | 107.6 CY |

REVISIONS

| NO. | DATE | BY | REMARKS |
|---|---|---|---|
| | | | |

UTAH DEPARTMENT OF TRANSPORTATION
SALT LAKE CITY, UTAH
STRUCTURES DIVISION

DESIGN BM 10/04 CHECK KTF 10/04
DRAWN BLP 10/04 CHECK JW 10/04
QUANT. KTF 10/04 CHECK JW 11/04

APPROVAL RECOMM. DATE SENIOR DESIGN ENGR.
APPROVED FOR USE BY UDOT DATE UDOT BRIDGE ENGR.

I-15; CORRIDOR IN UTAH COUNTY
NORTH LEHI INTERCHANGE
BENT FOOTING DETAILS

PROJECT NUMBER SP-15-6(52)241

UTAH
COUNTY

C-340W
DRG. NO.

SHT. 12 OF 28

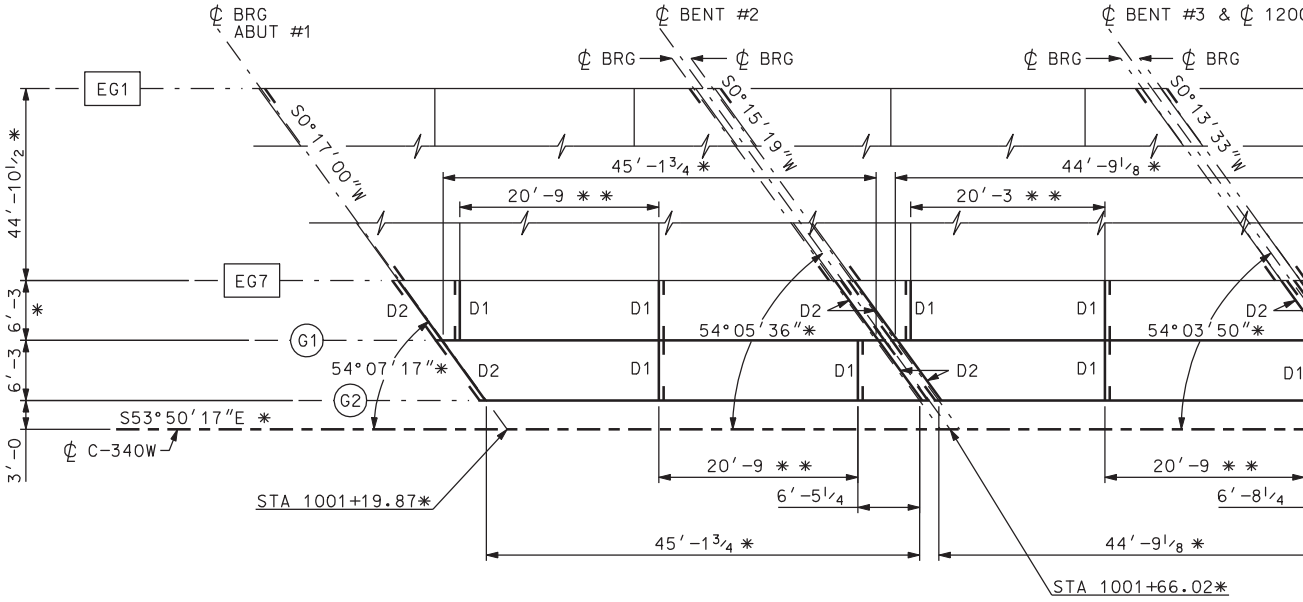


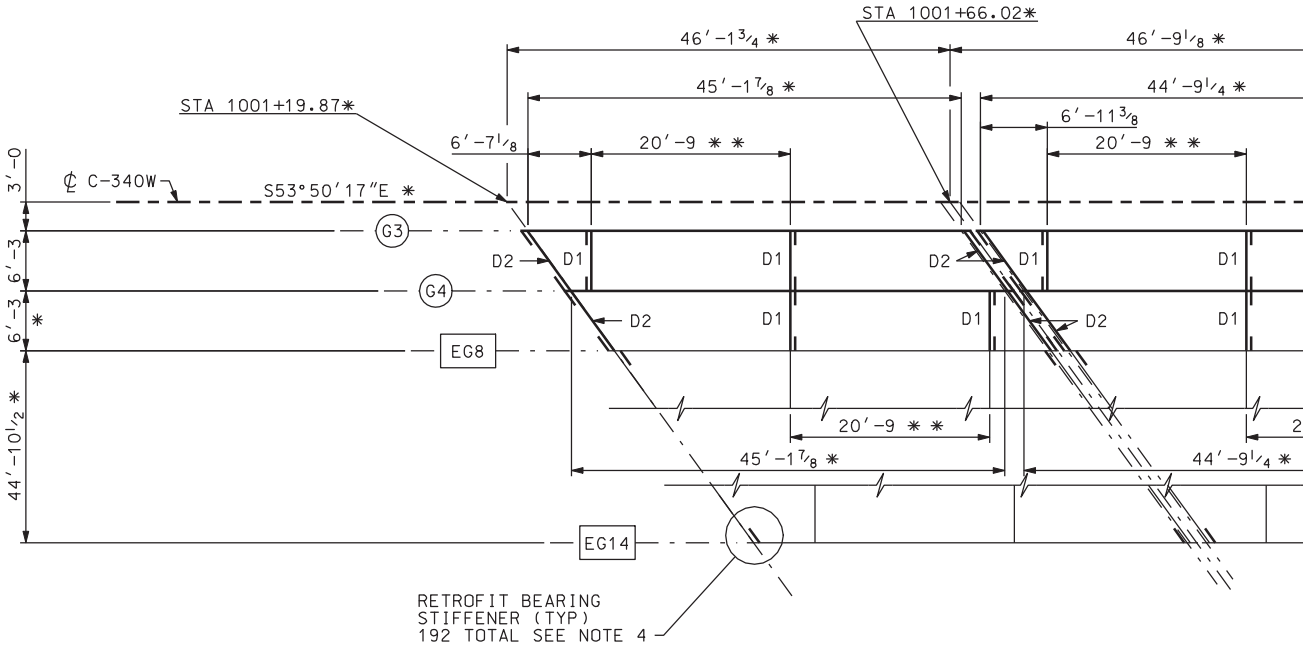


## NOTES

1. (G1) (G2) (G3) (G4) ARE PARALLEL TO BEARING S53°50'17"E.
2. SEE "GIRDER DETAILS" SHEET FOR GIRDER ELEVATIONS AND GENERAL NOTES.
3. SEE "DIAPHRAGM DETAILS 1" SHEET FOR DIAPHRAGM LAYOUT.
4. SEE "DIAPHRAGM DETAILS 2" FOR RETROFIT BEARING STIFFENER DETAIL AT EACH EXISTING BEARING.

## FRAMING

DGN File:IP_PWPcdms1717\4433_C-340-13_FRAM01.dgn
02-MAY-2005

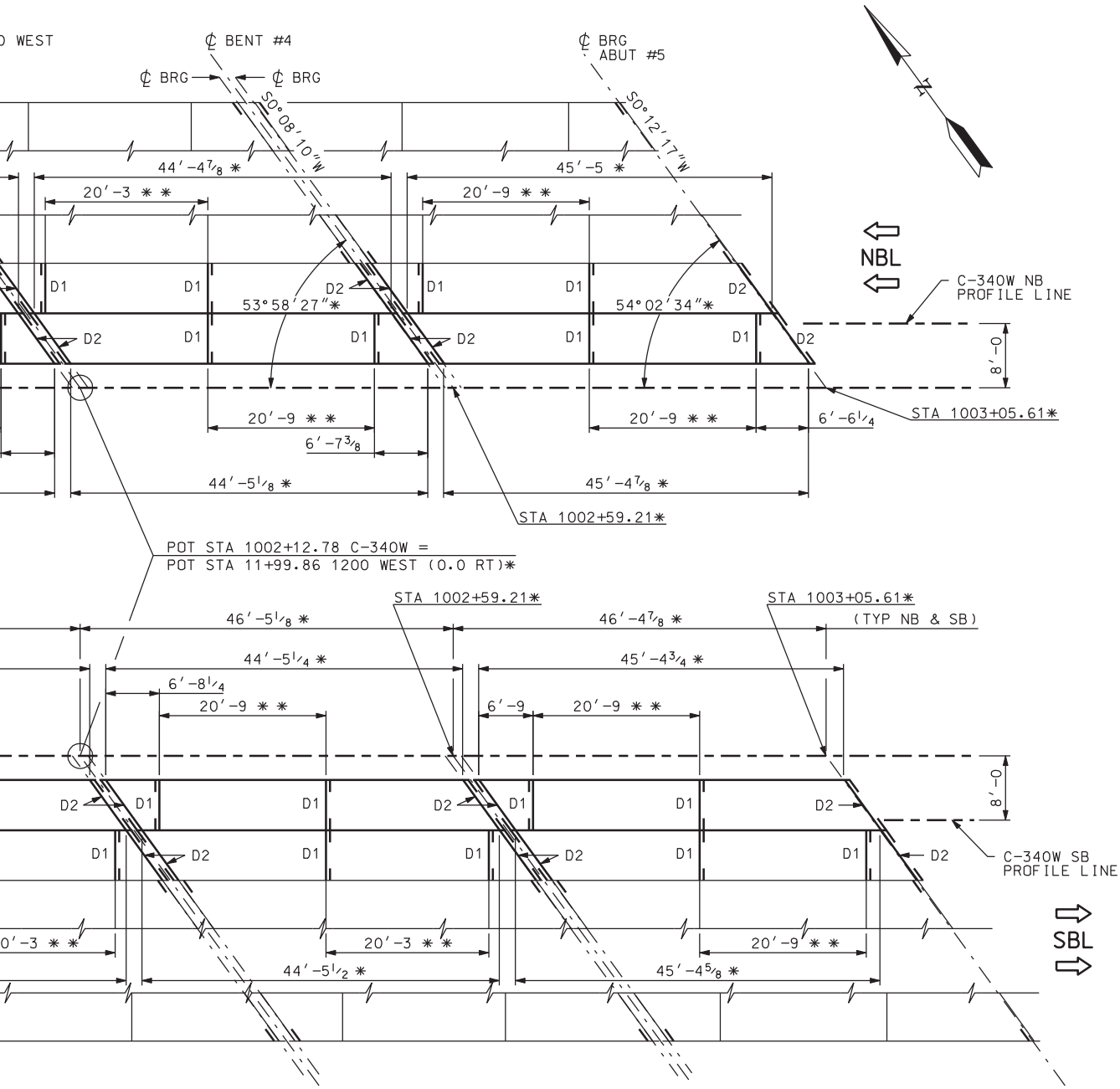


PLAN

* SEE "SITUATION & LAYOUT 1" SHEET GENERAL NOTE 6.

** FIELD VERIFY EXISTING DIAPHRAGM LOCATION. LINE UP NEW DIAPHRAGM WITH EXISTING DIAPHRAGMS.

EG1 — - — - · EXISTING GIRDER MARK NUMBER

(G1) — - — - — NEW GIRDER MARK NUMBER

| NO. | DATE | BY | REMARKS |
|---|---|---|---|

REVISIONS

UTAH DEPARTMENT OF TRANSPORTATION
SALT LAKE CITY, UTAH
STRUCTURES DIVISION

DESIGN JW 08/04 CHECK JY 08/04
DRAWN JW 09/04 CHECK PBB 10/04
QUANT. CHECK

APPROVAL RECOMM. DATE SENIOR DESIGN ENGR.
APPROVED FOR USE BY UDOT DATE UDOT BRIDGE ENGR.

I-15; CORRIDOR IN UTAH COUNTY
NORTH LEHI INTERCHANGE
FRAMING PLAN

PROJECT NUMBER SP-15-6(52)241

UTAH
COUNTY

C-340W
DRG. NO.

SHT. 13 OF 28

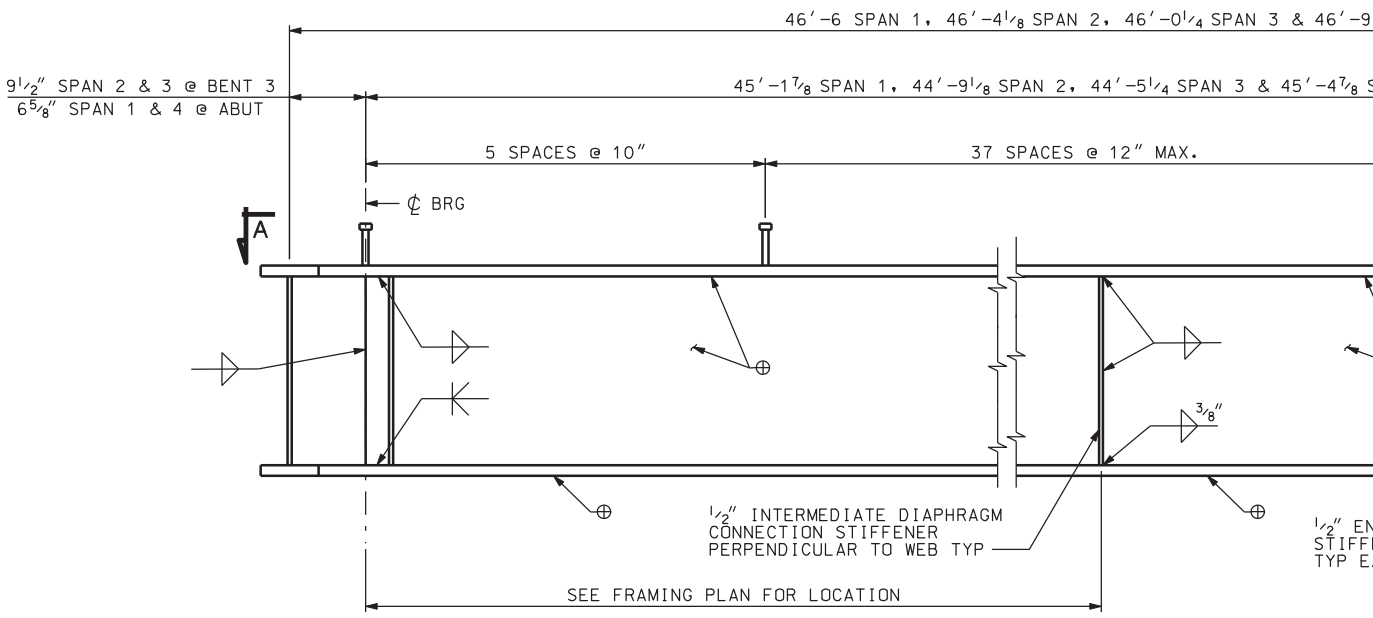


## GIRDER ELEVATION

W27x114 GIRDER

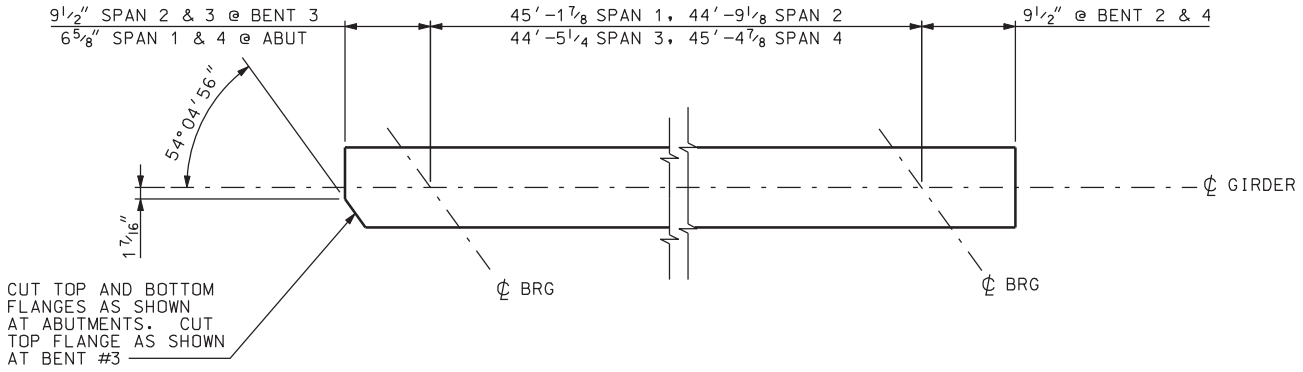


## SECTION A-A

DGN File:IP_PWPcdnsl717\4433_C-340-14_STEEL01.dgn
02-MAY-2005

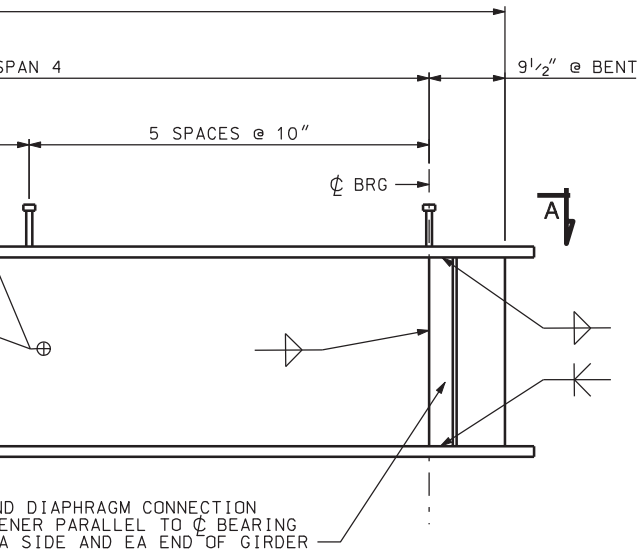


## NOTES

1. ERECT THE GIRDERS WITH THE NATURAL CAMBER UP.
2. PERFORM CHARPY V-NOTCH TOUGHNESS TEST ON ALL MAIN LOAD CARRYING MEMBERS, INDICATED BY ⊕ , TO MEET REQUIREMENTS FOR ZONE 2.
3. ALL DIMENSIONS SHOWN ARE HORIZONTAL. ADJUST LENGTHS AS NECESSARY IN FABRICATION TO TAKE VERTICAL GRADE INTO ACCOUNT.
4. ALL INTERMEDIATE DIAPHRAGMS ARE NORMAL TO THE WEB. BEARING STIFFENERS ARE PARALLEL TO THE CENTERLINE OF BEARINGS.
5. CENTERLINES OF GIRDERS ARE PARALLEL TO CENTERLINE C-340W.
6. INCLUDE THE PRICE FOR SHEAR STUDS, BOLTS AND STIFFENERS IN THE CONTRACT PRICE FOR STRUCTURAL STEEL.
7. SEE "BEARING DETAILS" SHEET FOR SOLE PLATE AND BEARING DETAILS.
8. USE STRUCTURAL STEEL CONFORMING TO AASHTO M270 GRADE 36 MINIMUM FOR ALL STRUCTURAL STEEL.
9. CONFORM WELDING, WELDER QUALIFICATIONS, PREQUALIFICATION OF WELD DETAILS AND INSPECTION OF WELDS TO THE REQUIREMENTS OF THE ANSI/AASHTO/AWS BRIDGE WELDING CODE D1.5.
10. THE METHODS OF JOINT PREPARATION FOR WELDING SHOWN ON THE PLANS ARE BASED ON THE USE OF MANUAL SHIELDED METAL-ARC WELDING. THE USE OF THIS OR ANY OTHER WELDING PROCESS WILL BE SATISFACTORY ONLY AFTER THE WELDING PROCEDURE HAS BEEN SUBMITTED BY THE CONTRACTOR AND APPROVED BY THE ENGINEER.
11. USE THE MINIMUM SIZED STRENGTH FILLET WELDS REQUIRED BY ANSI/AASHTO/AWS BRIDGE WELDING CODE D1.5 FOR THE THICKNESS OF THE MATERIAL JOINED UNLESS OTHERWISE SPECIFIED. USE MINIMUM FILLET WELD SIZE OF 1/4", EXCEPT WHERE NOTED OTHERWISE.
12. DIMENSIONS SHOWN ON THE PLANS ASSUME THE AMBIENT TEMPERATURE OF THE GIRDER TO BE 70°F . CORRECT THE LENGTH USED IN FABRICATION AT THE RATE OF 1/16" PER EACH 100' OF LENGTH FOR EVERY 10°F DIFFERENCE IN TEMPERATURE TO ALLOW FOR EXPANSION AND CONTRACTION.
13. DO NOT FIELD WELD TO GIRDERS EXCEPT WHERE NOTED OTHERWISE.
14. ALL BOLTED CONNECTIONS SHALL BE MADE WITH 7/8" DIA. HIGH STRENGTH BOLTS CONFORMING TO ASTM A325, TYPE 1, UNLESS NOTED OTHERWISE.

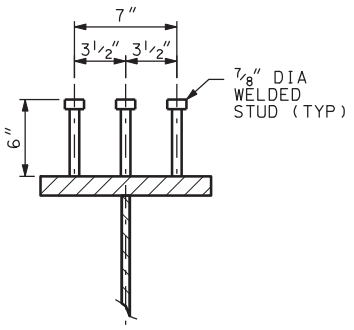


SHEAR STUD DETAIL

| NO. | DATE | BY | REMARKS |
|---|---|---|---|
| | | | |

REVISIONS

UTAH DEPARTMENT OF TRANSPORTATION
SALT LAKE CITY, UTAH
STRUCTURES DIVISION

DESIGN JW 08/04 CHECK JY 08/04
DRAWN JW 09/04 CHECK PBB 09/04
QUANT. JW 10/04 CHECK PBB 10/04

APPROVAL RECOMM. DATE SENIOR DESIGN ENGR.
APPROVED FOR USE BY UDOT DATE UDOT BRIDGE ENGR.

I-15; CORRIDOR IN UTAH COUNTY
NORTH LEHI INTERCHANGE
GIRDER DETAILS

PROJECT NUMBER SP-15-6(52)241

UTAH
COUNTY

C-340W
DRG. NO.

SHT. 14 OF 28

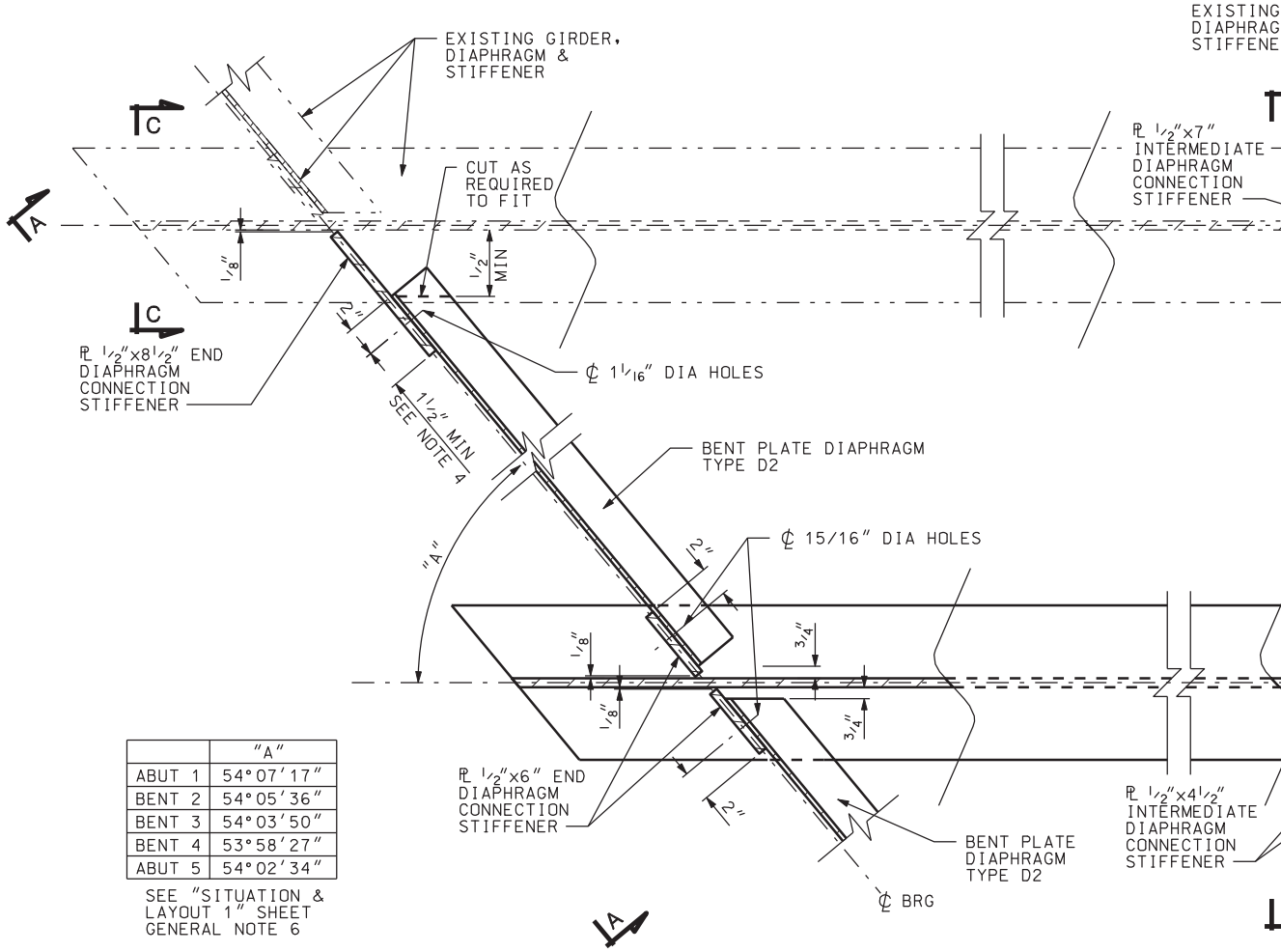


| | "A" |
|---|---|
| ABUT 1 | 54°07'17" |
| BENT 2 | 54°05'36" |
| BENT 3 | 54°03'50" |
| BENT 4 | 53°58'27" |
| ABUT 5 | 54°02'34" |

SEE "SITUATION & LAYOUT 1" SHEET GENERAL NOTE 6

## DIAPHRAGM

NOTE: G1 IS SHOWN. G4 IS SIMILAR (OPPO
ONE SIDE STIFFENER AND DIAPHRAGM
REQUIRED FOR G2 AND G3

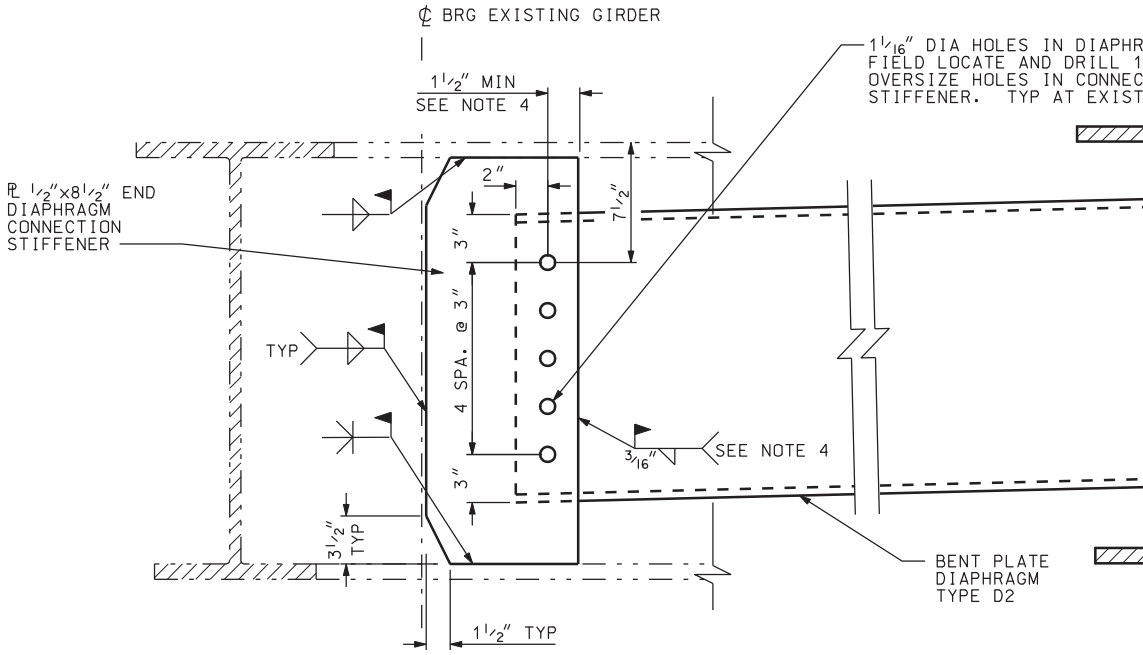


## SECTION A-A

DGN File: IP_PWPcdns1717\4433_C-340-15_STEEL02.dgn

02-MAY-2005

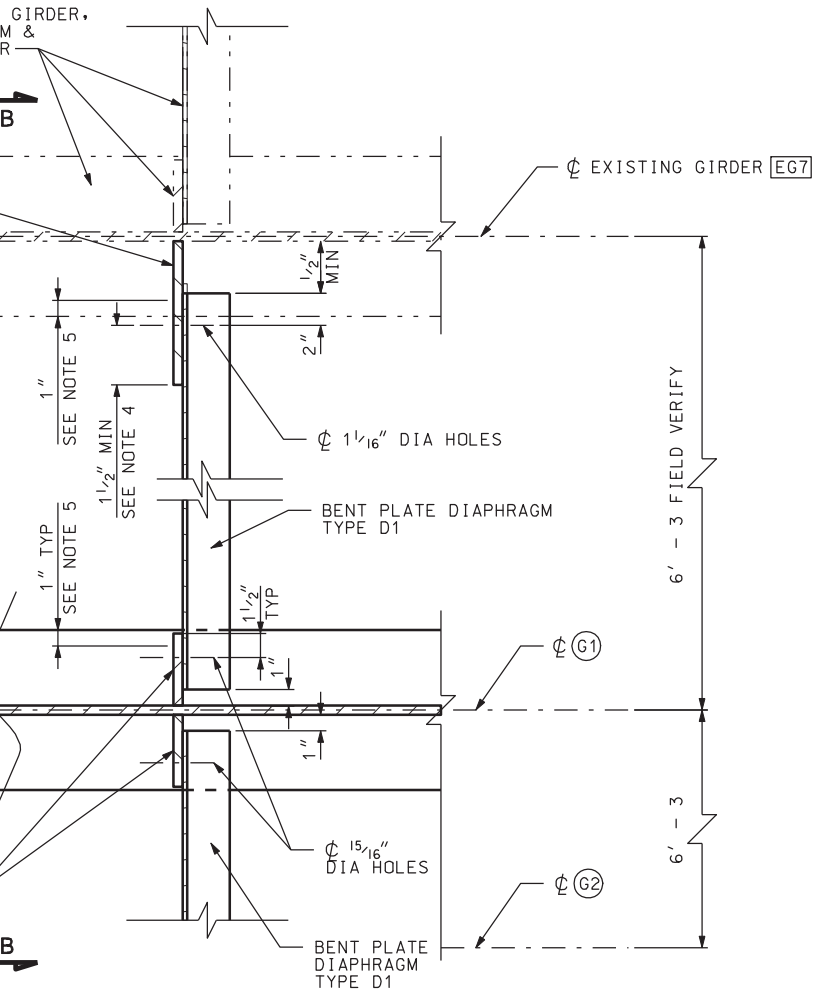


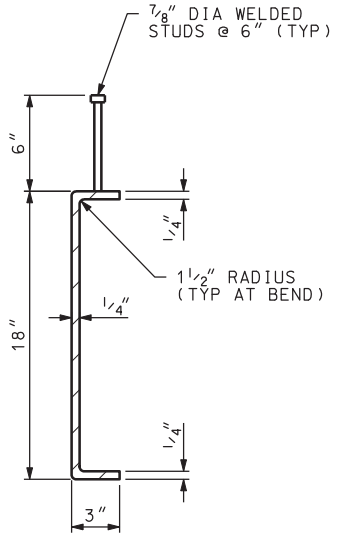


## BENT PLATE DIAPHRAGM DETAIL

NOTE: CONTRACTOR MAY SUBSTITUTE MC 18 x 42.7 FOR BENT PLATE SECTION AT NO ADDITIONAL COST TO THE DEPARTMENT

SITE HAND)
ARE

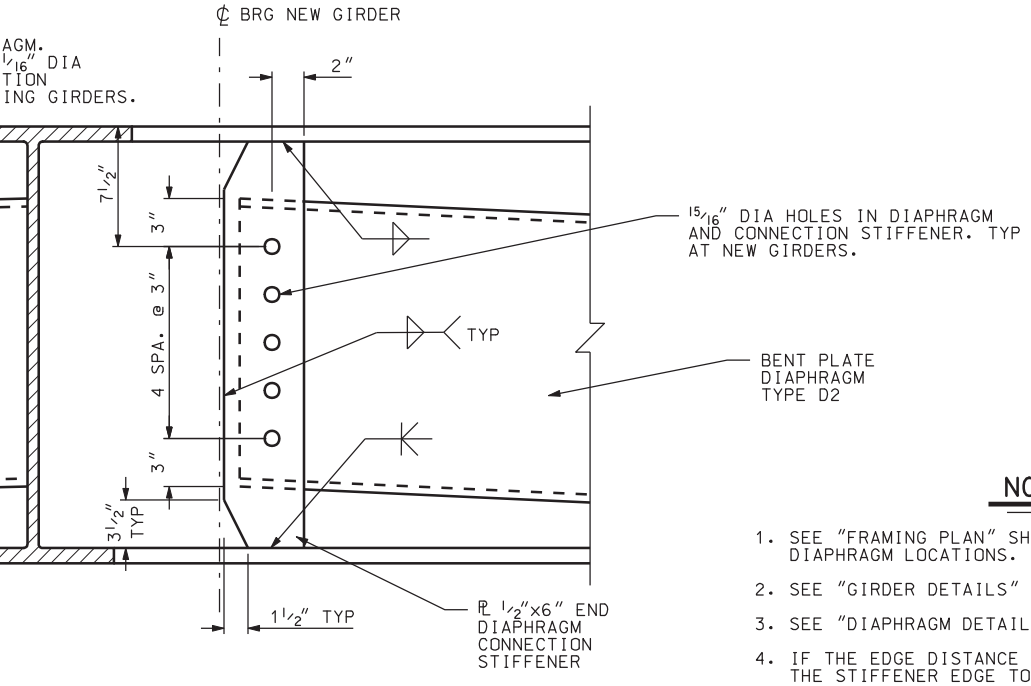


## NOTES

1. SEE "FRAMING PLAN" SHEET FOR INTERMEDIATE DIAPHRAGM LOCATIONS.
2. SEE "GIRDER DETAILS" SHEET FOR GENERAL NOTES.
3. SEE "DIAPHRAGM DETAILS 2" SHEET FOR SECTION B-B.
4. IF THE EDGE DISTANCE EXCEEDS 2", FIELD WELD THE STIFFENER EDGE TO THE DIAPHRAGM AFTER THE DECK SLAB CLOSURE POUR IS IN PLACE.
5. STOP FILLET WELDS CONNECTING STIFFENERS TO FLANGES 1" FROM EDGE OF FLANGE.
6. SEE "DIAPHRAGM DETAILS 2" FOR SECTION C-C.

| NO. | DATE | BY | REMARKS |
|---|---|---|---|

REVISIONS

UTAH DEPARTMENT OF TRANSPORTATION
SALT LAKE CITY, UTAH
STRUCTURES DIVISION

DESIGN JW 08/04 CHECK JY 08/04
DRAWN JW 09/04 CHECK PBB 10/04
QUANT. CHECK

APPROVAL RECOMM. DATE SENIOR DESIGN ENGR.
APPROVED FOR USE BY UDOT DATE UDOT BRIDGE ENGR.

I-15; CORRIDOR IN UTAH COUNTY
NORTH LEHI INTERCHANGE
DIAPHRAGM DETAILS 1
PROJECT NUMBER SP-15-6(52)241

UTAH
COUNTY

C-340W
DRG. NO.

SHT. 15 OF 28

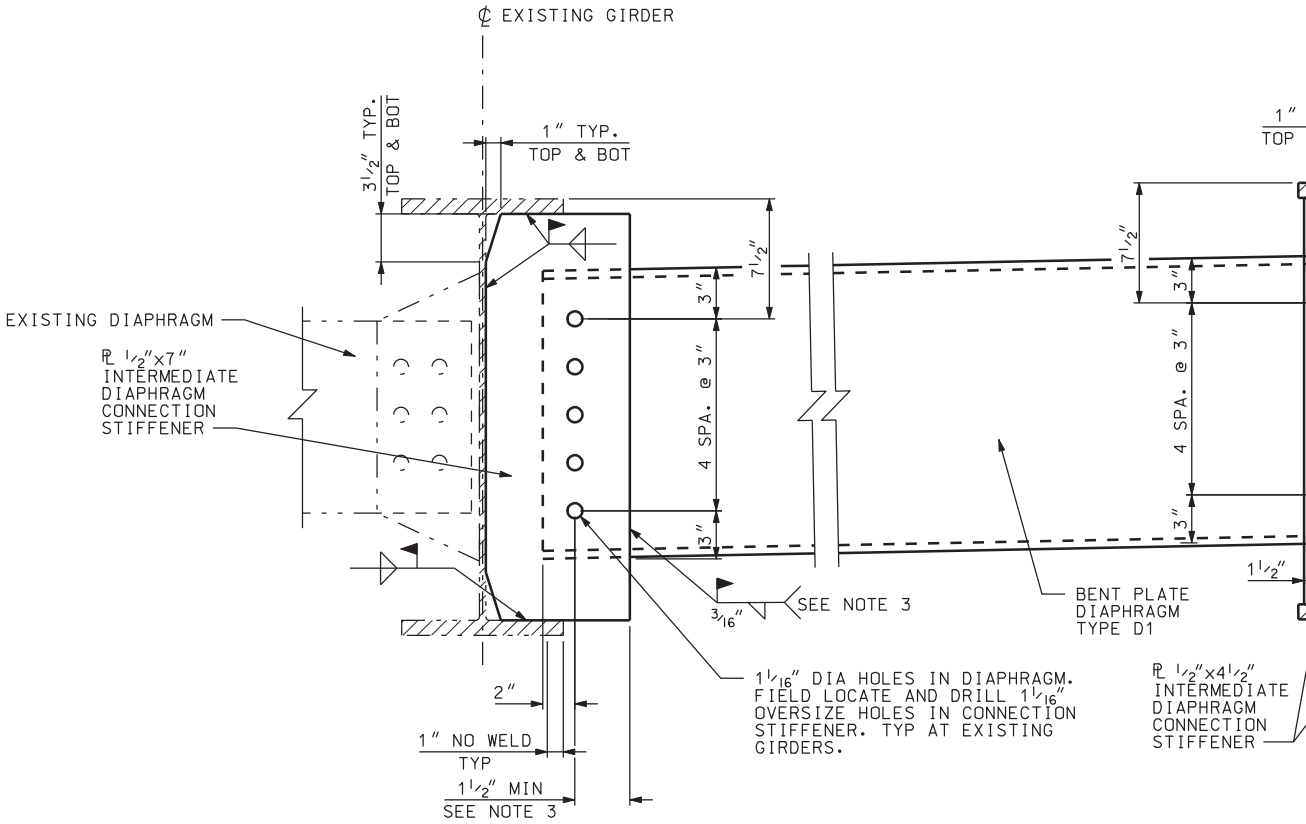


SECTION B-B

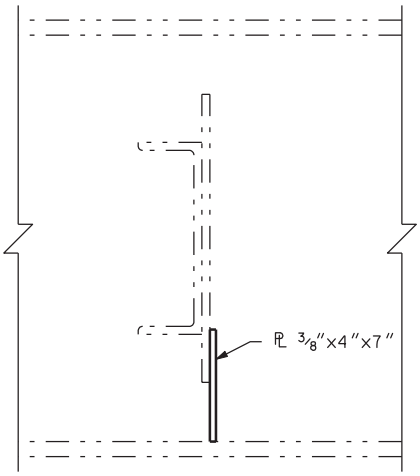


SECTION THRU CHANNEL

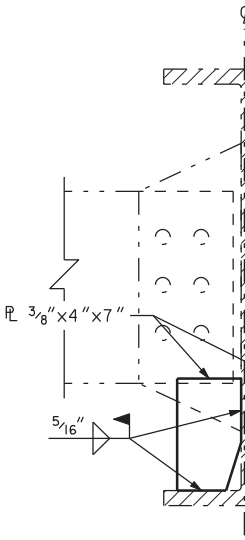


SECTIO

RETROFIT BEARING STIFFENER DETAIL

DGN File:IP_PWPcdms1717\4433_C-340-16_STEEL03.dgn
02-MAY-2005

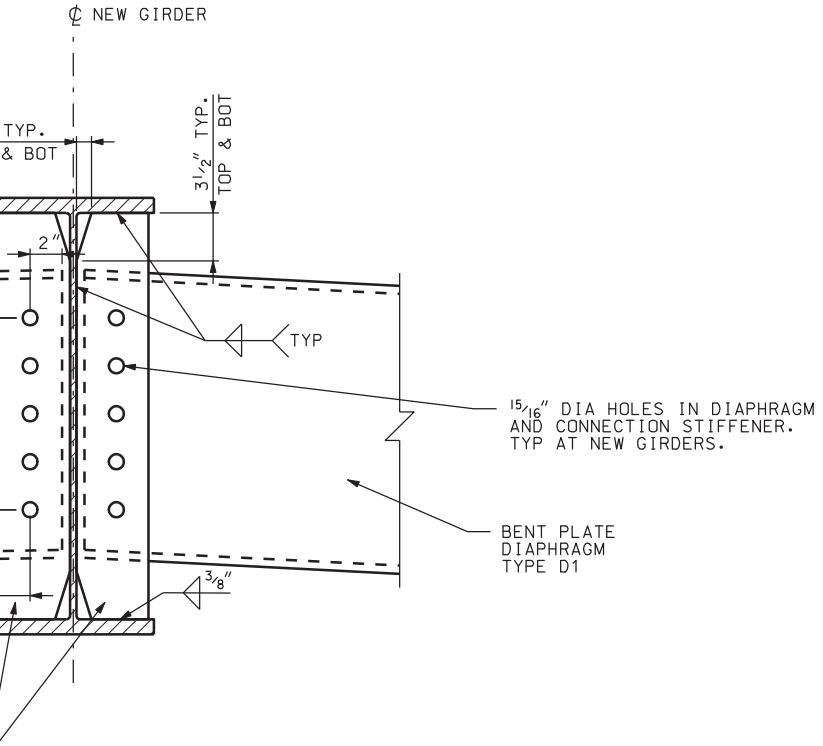


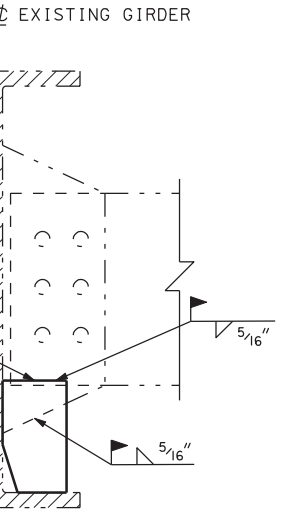


N C-C

## NOTES

1. SEE "FRAMING PLAN" SHEET FOR INTERMEDIATE DIAPHRAGM LOCATIONS.
2. SEE "GIRDER DETAILS" SHEET FOR GENERAL NOTES.
3. IF THE EDGE DISTANCE EXCEEDS 2", FIELD WELD THE STIFFENER EDGE TO DIAPHRAGM AFTER THE DECK SLAB CLOSURE POUR IS IN PLACE.

| NO. | DATE | BY | REMARKS |
|---|---|---|---|
| | | | |

REVISIONS

UTAH DEPARTMENT OF TRANSPORTATION
SALT LAKE CITY, UTAH
STRUCTURES DIVISION

DESIGN JW 08/04 CHECK JY 08/04
DRAWN JW 09/04 CHECK PBB 10/04
QUANT. CHECK

APPROVAL RECOMM. DATE SENIOR DESIGN ENGR.
APPROVED FOR USE BY UDOT DATE UDOT BRIDGE ENGR.

I-15; CORRIDOR IN UTAH COUNTY
NORTH LEHI INTERCHANGE
DIAPHRAGM DETAILS 2
PROJECT NUMBER SP-15-6(52)241

UTAH
COUNTY

C-340W
DRG. NO.

SHT. 16 OF 28

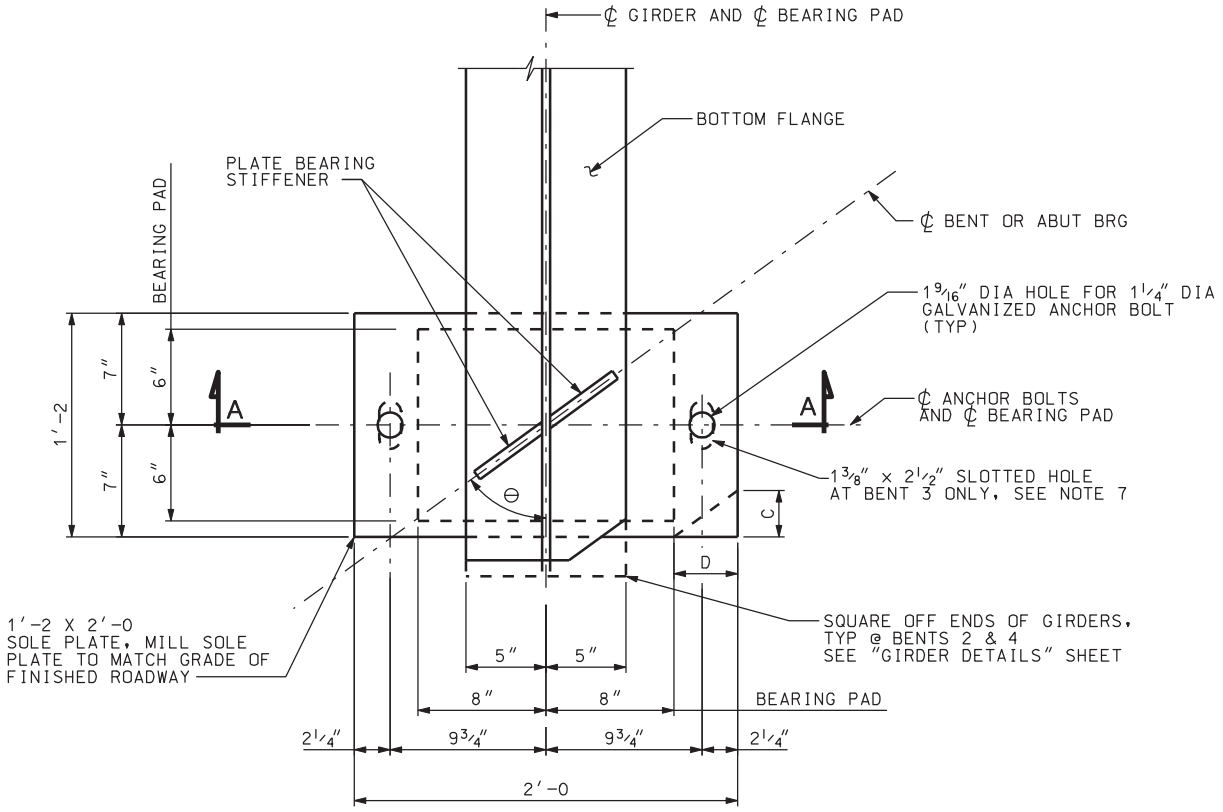


## PLAN

| BEARIN | |
|---|---|
| | Θ |
| ABUT 1 | 54°07'17' |
| BENT 2 | 54°05'36' |
| BENT 3 | 54°03'50' |
| BENT 4 | 53°58'27' |
| ABUT 5 | 54°02'34' |

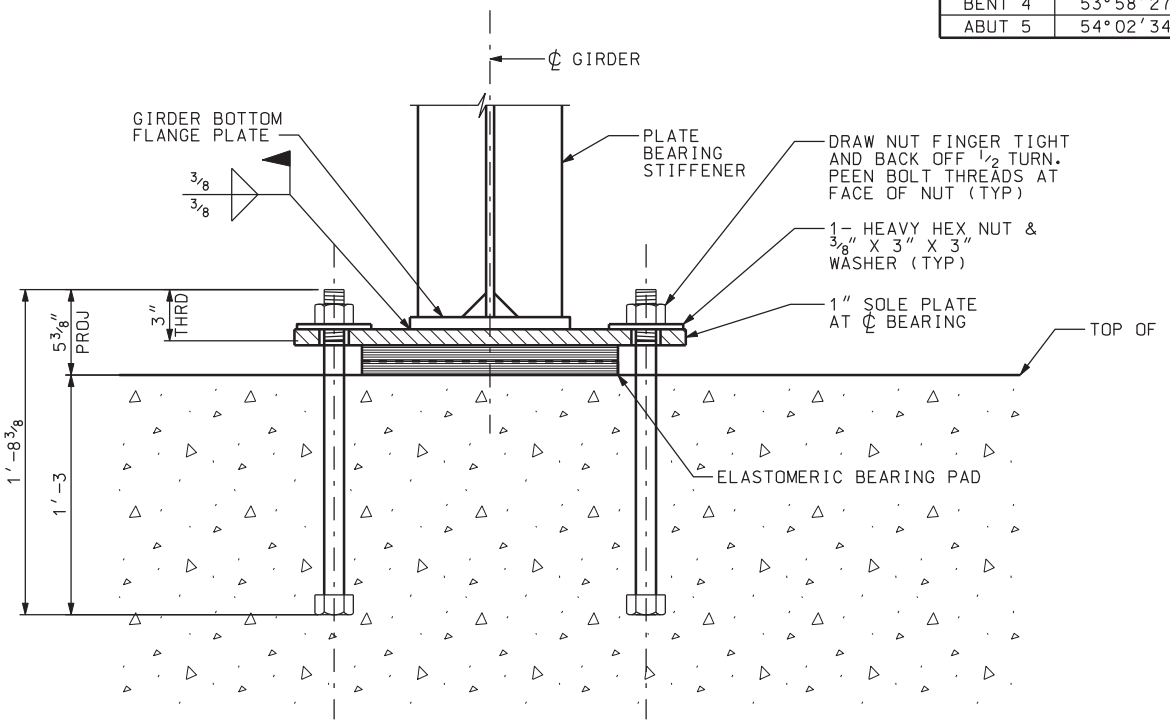


## SECTION A-A

DGN File:IP_PWPcdnsl717\4433_C-340-17_BRNG01.dgn

02-MAY-2005

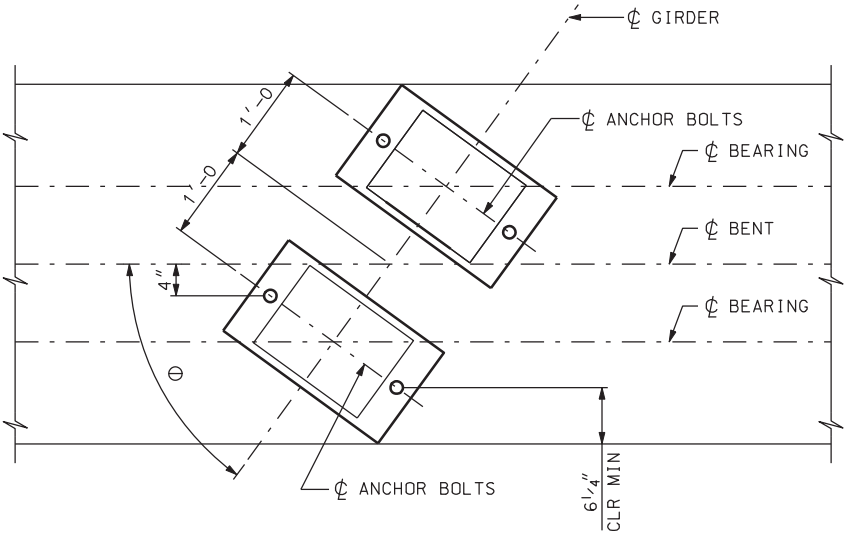


## ANCHOR BOLT LOCATION DIAGRAM (BENT)

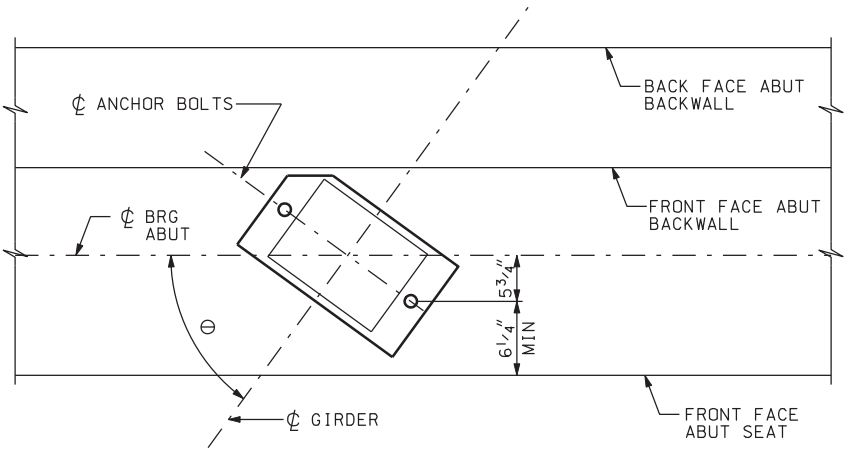


## ANCHOR BOLT LOCATION DIAGRAM (ABUTMENT)

| NG DETAILS | | | |
|---|---|---|---|
| | NO. BRG | C | D |
| " | 4 | 3 3/8" | 4 5/8" |
| " | 8 | N/A | N/A |
| " | 8 | N/A | N/A |
| " | 8 | N/A | N/A |
| " | 4 | 3 3/8" | 4 5/8" |

BEARING SEAT

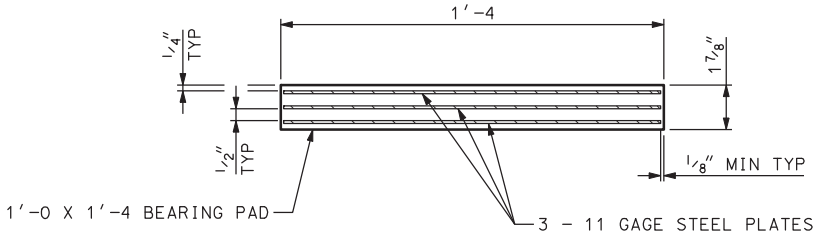


## BEARING PAD DETAIL

## NOTES

1. PAYMENT FOR ANCHOR BOLT AND BEARING ASSEMBLIES IS INCLUDED IN THE CONTRACT PRICE FOR STRUCTURAL STEEL.
2. ELASTOMER FOR BEARING PADS HARDNESS 50.
3. USE ASTM F-1554 GRADE 36 ANCHOR BOLTS.
4. GALVANIZE NUTS, WASHERS, AND ANCHOR BOLTS IN ACCORDANCE WITH AASHTO M232 (ASTM A153). ALL GALVANIZED STEEL THREADS ARE TO BE FREE FROM DEFECTS ALLOWING NUTS TO BE FREE RUNNING BY HAND FOR THE ENTIRE LENGTH OF THREADS.
5. FILL ANCHOR BOLT SOLE PLATE HOLES WITH SILICONE JOINT SEALER.
6. SOLE PLATES SHALL BE BEVELED TO MATCH GRADE OF FINISHED ROADWAY.
7. THE LOCATION OF THE ANCHOR BOLTS IN RELATION TO THE SLOTTED HOLES IN THE SOLE PLATE SHALL CORRESPOND WITH THE TEMPERATURE AT THE TIME OF ERECTION. THE ANCHOR BOLTS SHALL BE CENTERED IN THE SLOTTED HOLES AT 60°F. SEE "EXPANSION JOINT DETAILS" FOR TEMPERATURE ADJUSTMENT.

| NO. | DATE | BY | REMARKS |
|---|---|---|---|
| | | | |

REVISIONS

UTAH DEPARTMENT OF TRANSPORTATION
SALT LAKE CITY, UTAH
STRUCTURES DIVISION

DESIGN KMR 10/04 CHECK KTF 10/04
DRAWN RDF 10/04 CHECK KTF 10/04
QUANT. CHECK

APPROVAL RECOMM. DATE SENIOR DESIGN ENGR.
APPROVED FOR USE BY UDOT DATE UDOT BRIDGE ENGR.

I-15; CORRIDOR IN UTAH COUNTY
NORTH LEHI INTERCHANGE
BEARING DETAILS
PROJECT NUMBER SP-15-6(52)241

UTAH
COUNTY

C-340W
DRG. NO.

SHT. 17 OF 28

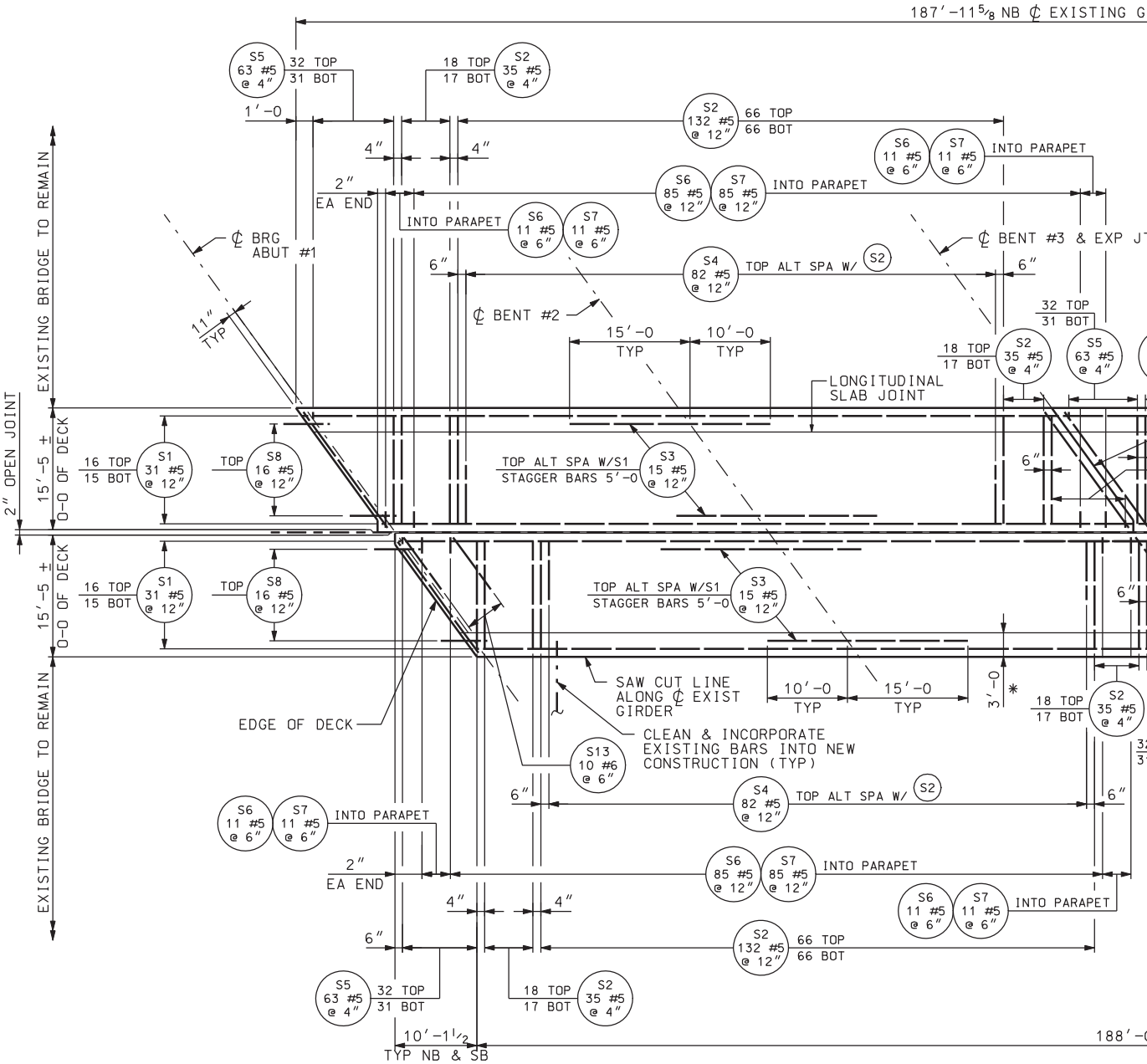


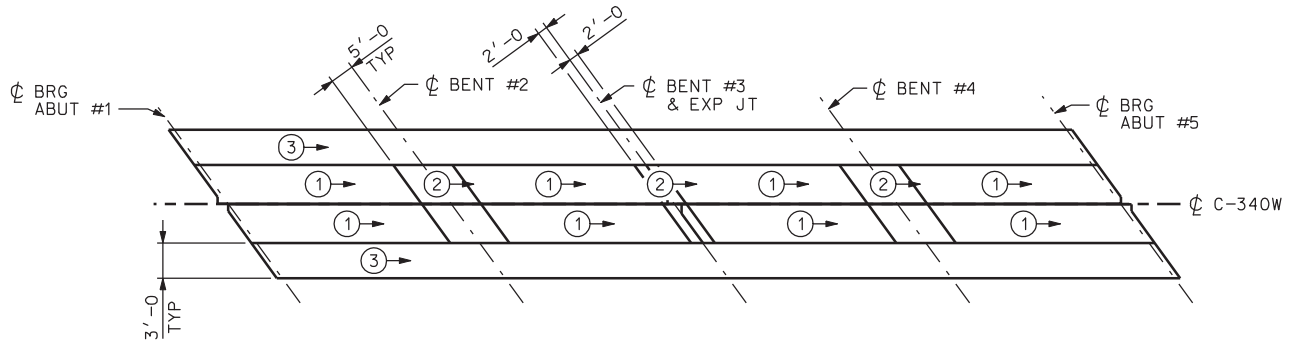


## POUR SEQUENCE

(2) → SEQUENCE NUMBER WITH DIRECTION OF POUR INDICATED

NOTE: PLACE DECK IN SECTIONS AND SEQUENC
INDICATED. CONTRACTOR MAY SUBMIT
ALTERNATE PROCEDURES INCLUDING THE
COMBINING OF POURS (1) AND (2) FOR APP
BY ENGINEER.

DGN File: IP_PWPcdns1717\4433_C-340-18_DCKSLB01.dgn
02-MAY-2005

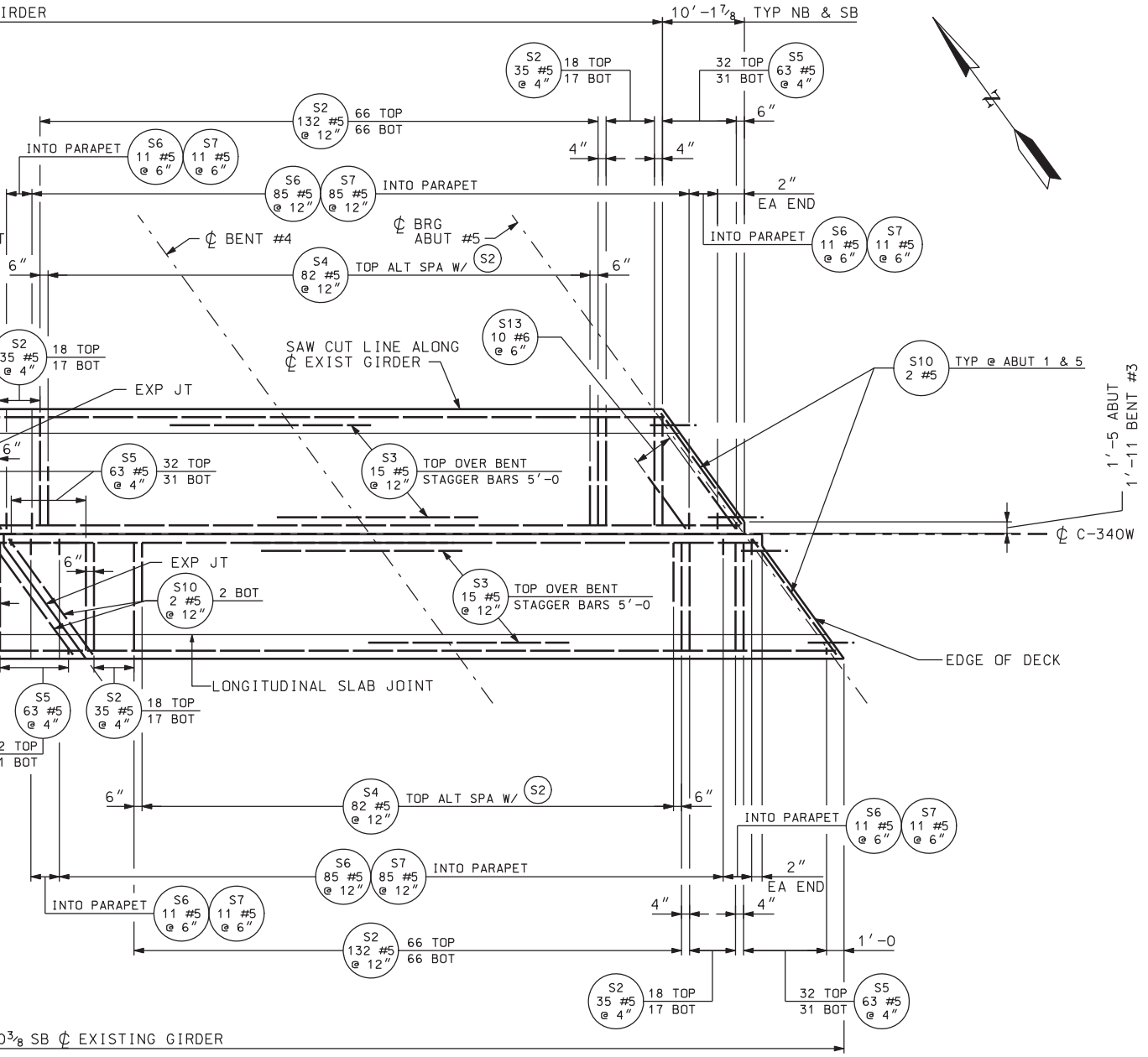


## PLAN

* CLOSURE POUR

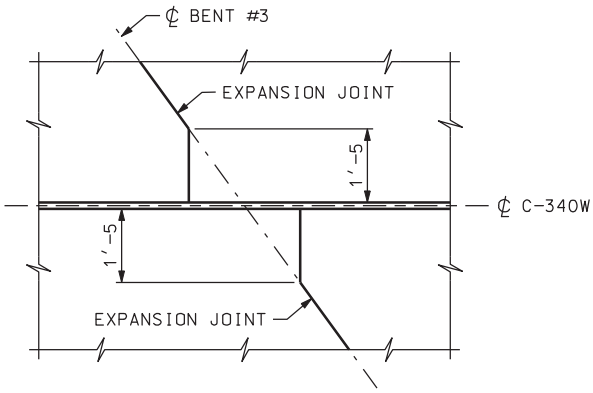


## BENT #3 DECK DETAIL

## NOTES

1. SEE "DECK SECTIONS" FOR ADDITIONAL REINFORCEMENT.
2. SEE "PARAPET DETAILS" FOR PARAPET REINFORCEMENT.
3. MINIMUM LAP LENGTH FOR (S1) BARS: #5 BAR 2′-6. STAGGER SPLICES SUCH THAT NO MORE THAN 50% OF (S1) BARS ARE SPLICED AT A GIVEN LOCATION (TAKEN NORMAL TO ℄ C-340W).
4. STAGGER (S1), (S2) AND (S5) BARS SUCH THAT THE TOP BARS ARE OFFSET 6″ FROM BOTTOM BARS.
5. STAY-IN-PLACE FORMS ARE NOT PERMITTED.

| QUANTITIES STRUCTURAL CONCRETE | |
|---|---|
| DECK NB & SB | 173.4 CY |

| NO. | DATE | BY | REMARKS |
|---|---|---|---|
| | | | |

REVISIONS

UTAH DEPARTMENT OF TRANSPORTATION
SALT LAKE CITY, UTAH
STRUCTURES DIVISION

DESIGN KMR 10/04 CHECK KTF 10/04
DRAWN RDF 10/04 CHECK KTF 10/04
QUANT. KTF 10/04 CHECK KMR 10/04

APPROVAL RECOMM. DATE SENIOR DESIGN ENGR.
APPROVED FOR USE BY UDOT DATE UDOT BRIDGE ENGR.

I-15; CORRIDOR IN UTAH COUNTY
NORTH LEHI INTERCHANGE
DECK SLAB PLAN

PROJECT NUMBER SP-15-6(52)241

UTAH COUNTY

C-340W DRG. NO.

SHT. 18 OF 28

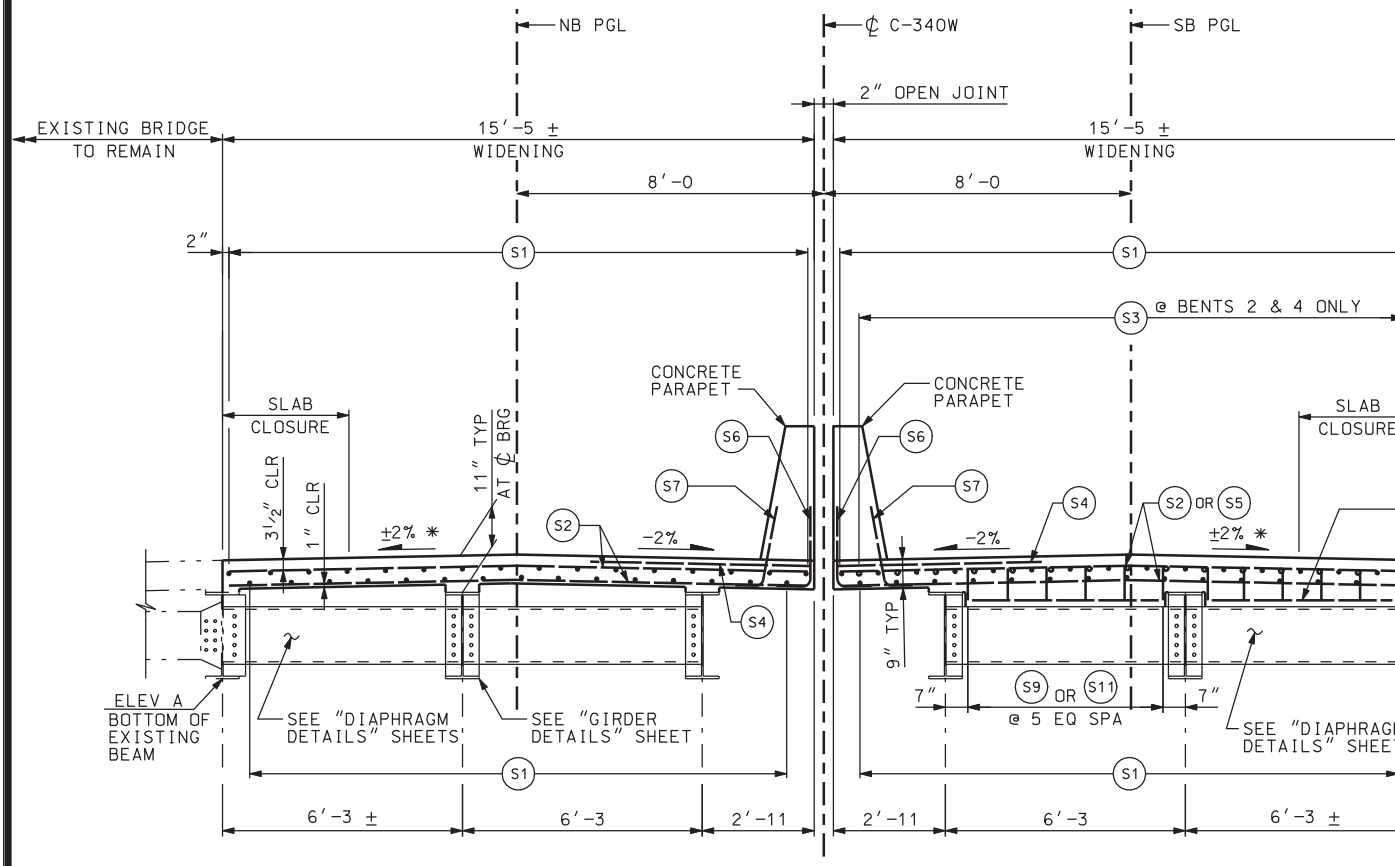


HALF SECTION IN SPAN

HALF SECTION AT BEARING

## TYPICAL CROSS SECTION

* VERIFY EXISTING CROSS SLOPE

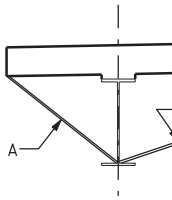


BRACE DECK OVE
DECK AS SHOWN.
CAPABLE OF DEV
BY MEMBER "A".

## SECTION

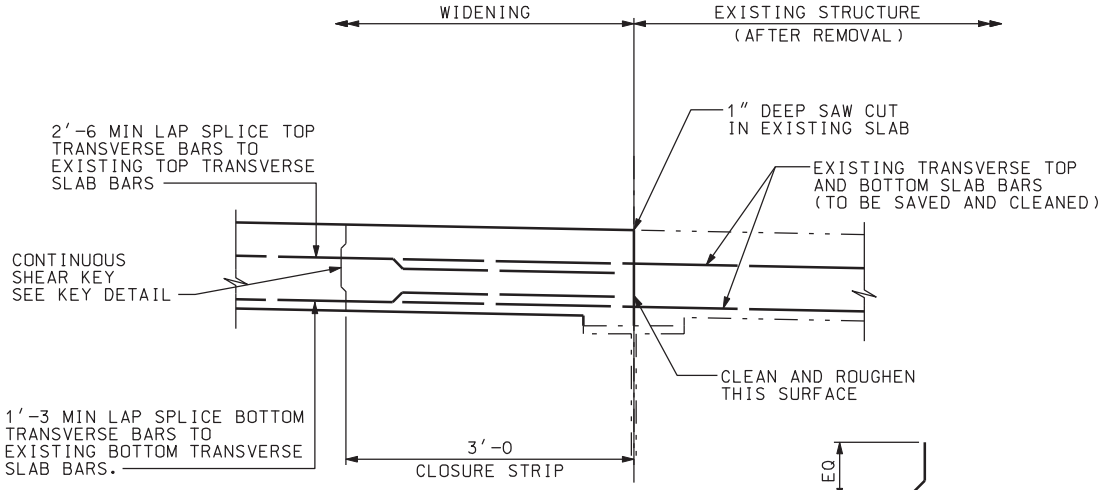


## SLAB CLOSURE

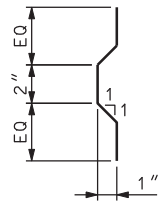


## KEY DETAIL

| TAB |
|---|
| |
| BENT #2 |
| BENT #2 |

FIELD VERIFY THE
ADJACENT TO THE W
CONTACT THE ENGIN
THE SURVEYED AND
THE ELEVATIONS SH
AT THE NORTH (N)

DGN File: IP_PWPcdms1717\4433_C-340-19-DECK01.dgn

02-MAY-2005

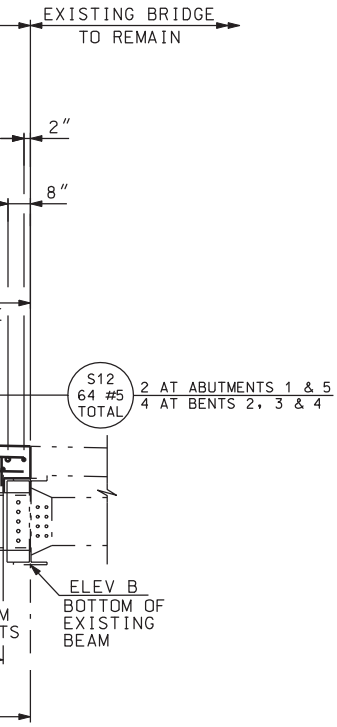


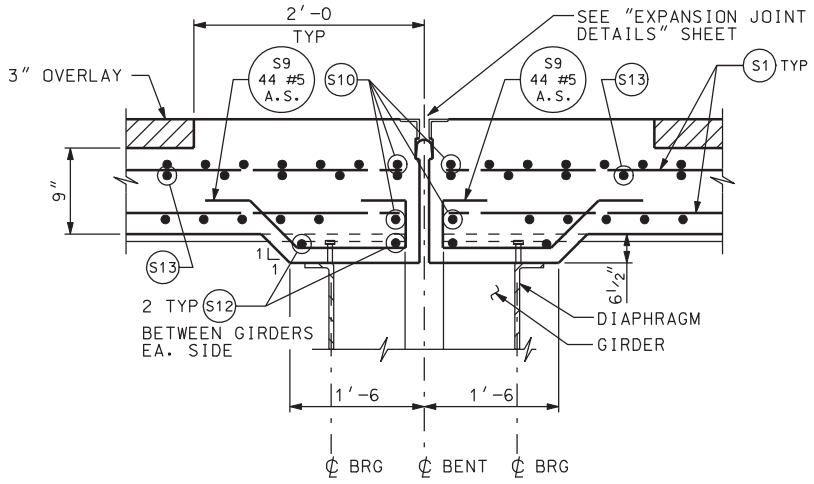


## EXPANSION BEARING

BENT 3

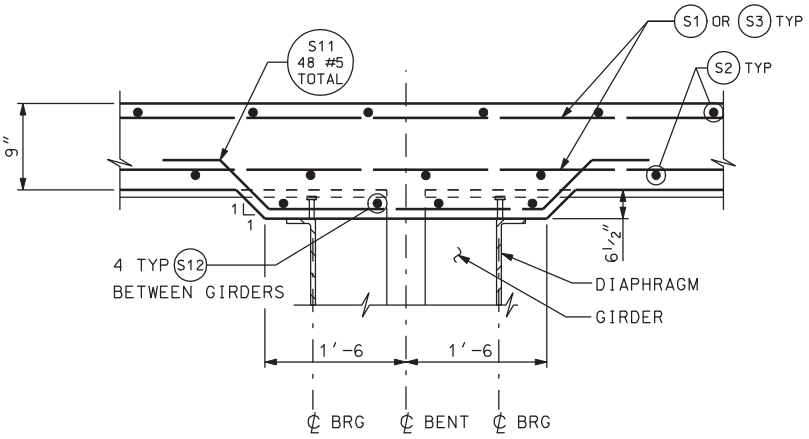


## CONTINUOUS BEARING

BENTS 2 & 4

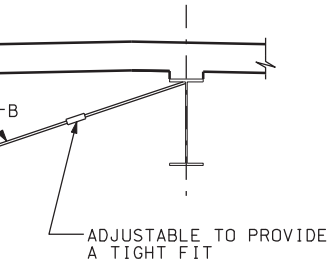


RHANGS DURING PLACEMENT OF
ENSURE THAT MEMBER "B" IS
ELOPING THE FORCES INDUCED
SHOP DRAWINGS ARE REQUIRED.

## AT SLAB OVERHANG

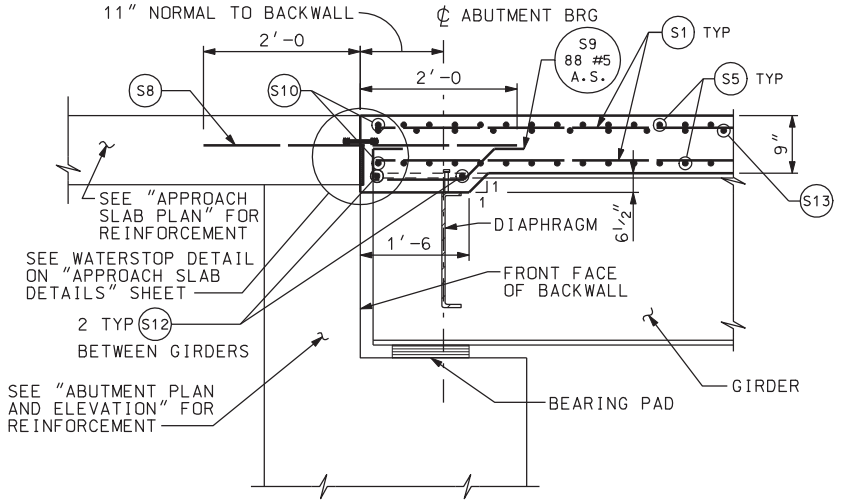


## SECTION THRU END DIAPHARGM

| BULATED ELEVATIONS | | |
|---|---|---|
| | ELEV A | ELEV B |
| 2N | 4530.27 | 4530.36 |
| 2S | 4530.29 | 4530.38 |

EXISTING BOTTOM OF BEAM ELEVATIONS
IDENED PORTIONS OF THE STRUCTURE.
EER IF THE DISCREPANCY BETWEEN
DETAILED ELEVATIONS EXCEEDS 1".
OWN ARE BASED ON SURVEYED ELEVATIONS
OR SOUTH (S) FACE OF THE BENT CAP.

| NO. | DATE | BY | REMARKS |
|---|---|---|---|
| | | | |

REVISIONS

UTAH DEPARTMENT OF TRANSPORTATION
SALT LAKE CITY, UTAH
STRUCTURES DIVISION

DESIGN KMR 10/04 CHECK KTF 10/04
DRAWN RDF 10/04 CHECK KTF 10/04
QUANT. CHECK

APPROVAL RECOMM. DATE SENIOR DESIGN ENGR.
APPROVED FOR USE BY UDOT DATE UDOT BRIDGE ENGR.

I-15; CORRIDOR IN UTAH COUNTY
NORTH LEHI INTERCHANGE
DECK SECTIONS
PROJECT NUMBER SP-15-6(52)241

UTAH
COUNTY

C-340W
DRG. NO.

SHT. 19 OF 28

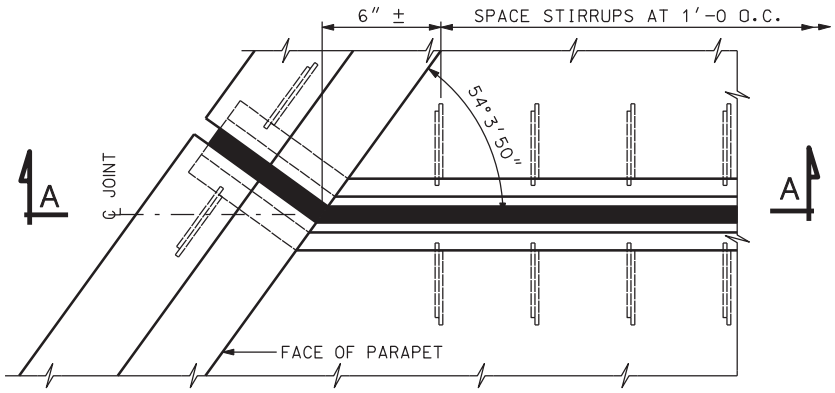


PLAN VIEW OF EXPANSION JOINT

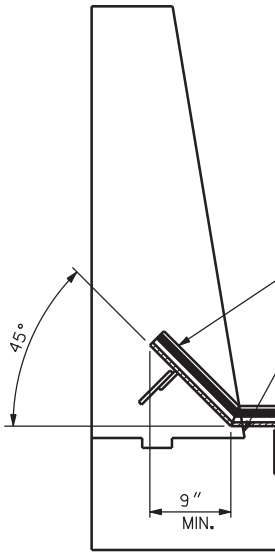


SECTION

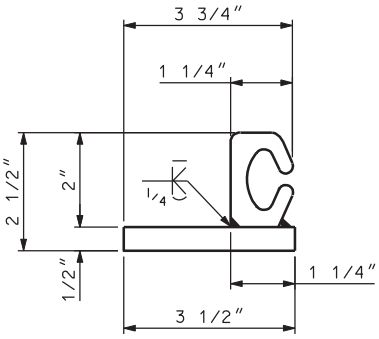


D.S. BROWN STRIP SEAL SYSTEM
(USE A2 SERIES SEAL ELEMENT)

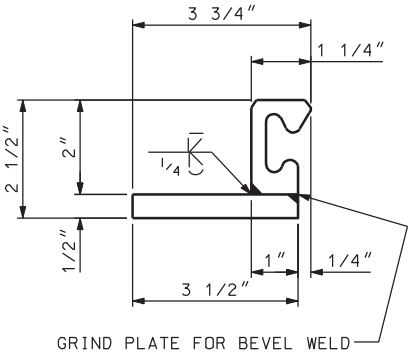


STRUCTURAL ACCESSORIES STRIP SEAL SYSTEM
(USE ONFLEX SEQ SERIES SEAL ELEMENT)

WABO ST
(USE SE S

ALTERNATES FOR STEEL EXTRUSION SYSTEMS

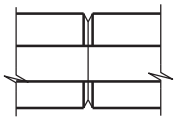

LEFT ELEVATION

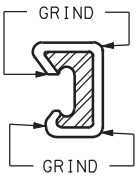


TYPICAL SECTION

RIGHT ELEVATION

STEEL EXTRUSION SPLICE DETAIL

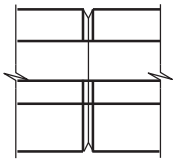

LEFT ELEVATION

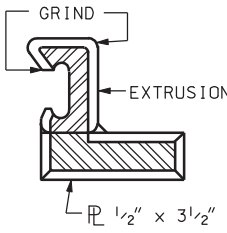


TYPICAL SECTION

SPLICE STEEL EXTRUSION RAILS, SPLICE
THEN WELD RAIL TO PLATE.

STEEL EXTRUSION R

PLATE SPLICE D

DGN File:IP_PWPcdns1717\4433_C-340-20_EXPJT01.dgn
02-MAY-2005

| LOCATION | RATED CAPACITY | JOINT WIDTH (IN.) | | | | | | |
|---|---|---|---|---|---|---|---|---|
| | | 30°F | 40°F | 50°F | 60°F | 70°F | 80°F | 90°F |
| BENT #3 | 3" | 2" | 1 7/8" | 1 3/4" | 1 5/8" | 1 1/2" | 1 3/8" | 1 1/4" |
| | | | | | | | | |

PLACE JOINT GLAND BEFORE PLACING PARAPET CONCRETE.

CONSTRUCTION JOINT

A-A

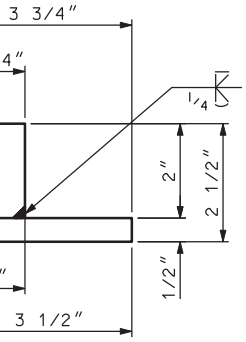


TRIP SEAL SYSTEM
ERIES SEAL ELEMENT)

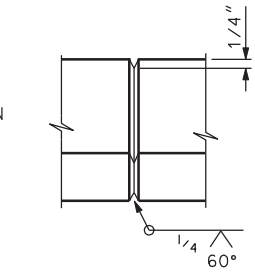


RIGHT ELEVATION

1/2" x 3 1/2" PLATES.

AIL AND
DETAIL

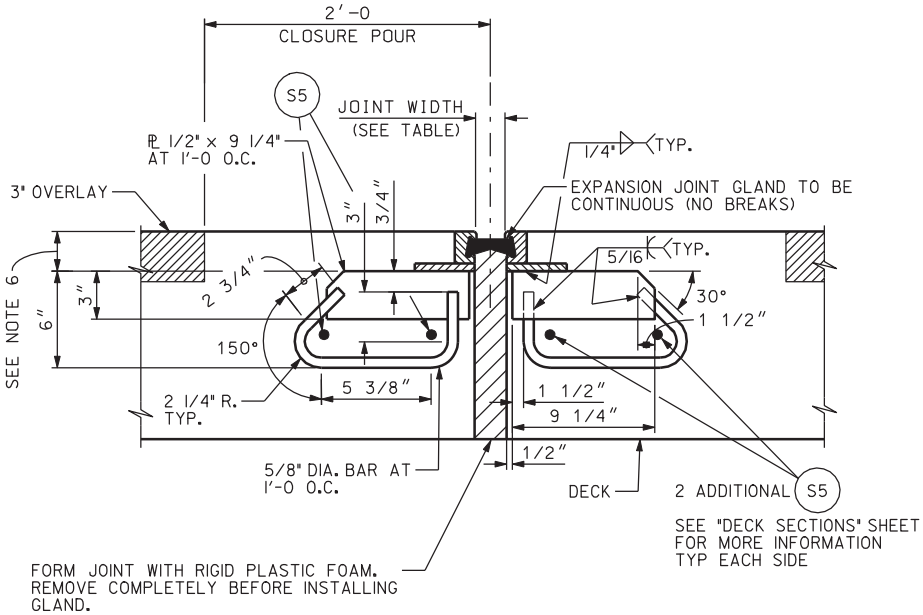


TYPICAL JOINT SECTION

## NOTES

1. PROVIDE NEW EXTRUSION TO MATCH THE EXISTING EXPANSION JOINT EXTRUSION.
2. PLACE EXPANSION JOINT GLAND PRIOR TO PLACING PARAPET CONCRETE. REPLACE THE EXISTING JOINT GLAND WITH THE NEW GLAND IN ONE PIECE (FULL WIDTH).
3. HOT-DIP GALVANIZE OR EPOXY COAT THE COMPLETE EXPANSION SYSTEM AFTER FABRICATION IN ACCORDANCE WITH AASHTO M 111 OR AASHTO M 284M, RESPECTIVELY. NO WARPING IS ACCEPTABLE IN THE PROCESS OF COATING BY EITHER METHOD.
4. EXTEND EXTRUSION INTO PARAPET 1" BEFORE EACH UPTURN.
5. SEE "PARAPET DETAILS" SHEET AND "DECK SLAB PLAN" SHEET FOR REINFORCING STEEL IN PARAPETS AND DECK.
6. MATCH SETTING DEPTH OF EXPANSION JOINT WITH THE EXISTING EXPANSION JOINT.

| QUANTITIES | |
|---|---|
| EXPANSION JOINT | 37 LIN. FT. |

| NO. | DATE | BY | REMARKS |
|---|---|---|---|
| | | | |

REVISIONS

UTAH DEPARTMENT OF TRANSPORTATION
SALT LAKE CITY, UTAH
STRUCTURES DIVISION

DESIGN PBB 10/04 CHECK JW 10/04
DRAWN RDF 10/04 CHECK JW 10/04
QUANT. PBB 10/04 CHECK JW 10/04

APPROVAL RECOMM. DATE SENIOR DESIGN ENGR.
APPROVED FOR USE BY UDOT DATE UDOT BRIDGE ENGR.

I-15; CORRIDOR IN UTAH COUNTY
NORTH LEHI INTERCHANGE
EXPANSION JOINT DETAILS

PROJECT NUMBER SP-15-6(52)241

UTAH
COUNTY

C-340W
DRG. NO.

SHT. 20 OF 28

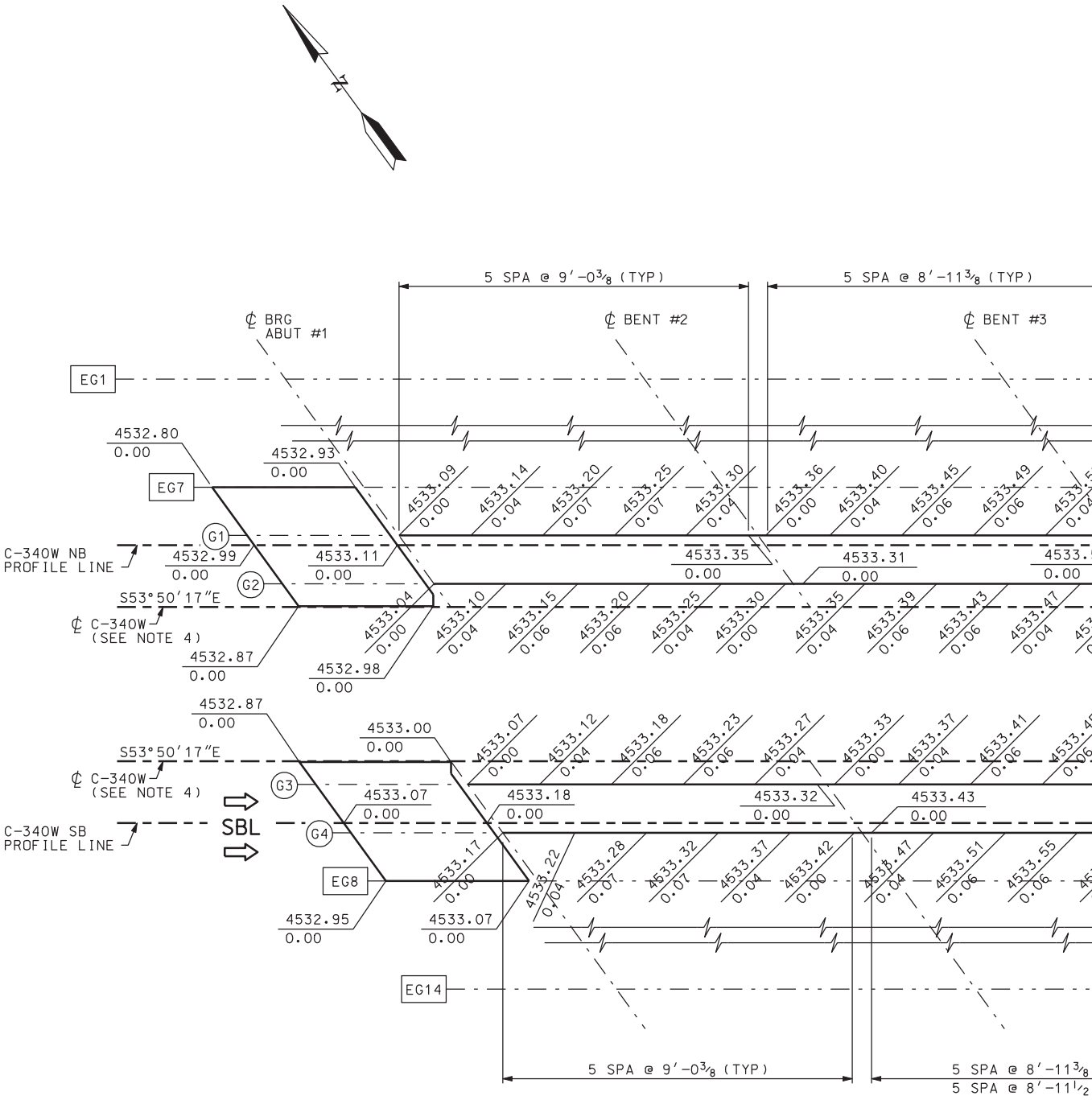


SCREED E

DGN File:IP_PWPcdms1717\4433_C-340-21-SCREED01.dgn

02-MAY-2005

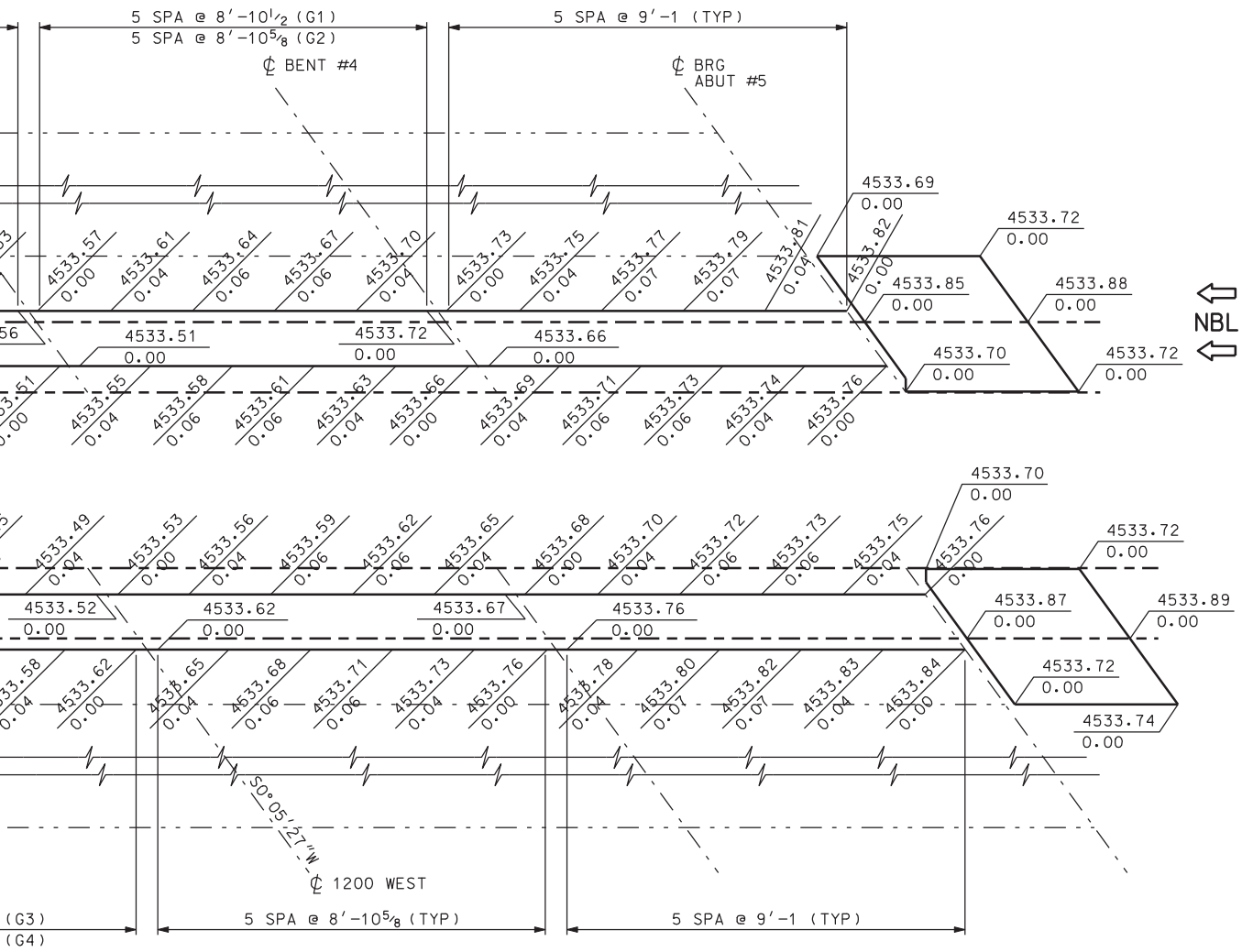


## LEVATIONS

## NOTES

1. FIGURES ABOVE THE LINES ARE FINISHED GRADE ELEVATIONS AT THE TOP OF CONCRETE BEFORE THE OVERLAY IS APPLIED. FIGURES BELOW THE LINES ARE DEADLOAD DEFLECTIONS (FT). ADD THE DEFLECTIONS TO THE FINISHED GRADE ELEVATIONS TO OBTAIN SCREED ELEVATIONS.
2. ALL DIMENSIONS ARE ALONG ℄ GIRDER.
3. VERIFY THE FINISHED GRADE ELEVATIONS TO MATCH THE CROSS-SLOPE OF THE EXISTING STRUCTURE.
4. ℄ C-340W IS SHOWN SEPARATED FOR THE NORTHBOUND AND SOUTHBOUND STRUCTURES TO FACILITATE PRESENTATION OF DATA.
5. COORDINATE APPROACH SLAB ELEVATIONS WITH ROADWAY GRADING.

| NO. | DATE | BY | REMARKS |
|---|---|---|---|

REVISIONS

UTAH DEPARTMENT OF TRANSPORTATION
SALT LAKE CITY, UTAH
STRUCTURES DIVISION

DESIGN JAR 10/04 CHECK KMR 10/04
DRAWN JAR 10/04 CHECK KMR 10/04
QUANT. CHECK

APPROVAL RECOMM. DATE SENIOR DESIGN ENGR.
APPROVED FOR USE BY UDOT DATE UDOT BRIDGE ENGR.

I-15; CORRIDOR IN UTAH COUNTY
NORTH LEHI INTERCHANGE
SCREED ELEVATIONS

PROJECT NUMBER SP-15-6(52)241

UTAH
COUNTY

C-340W
DRG. NO.

SHT. 21 OF 28

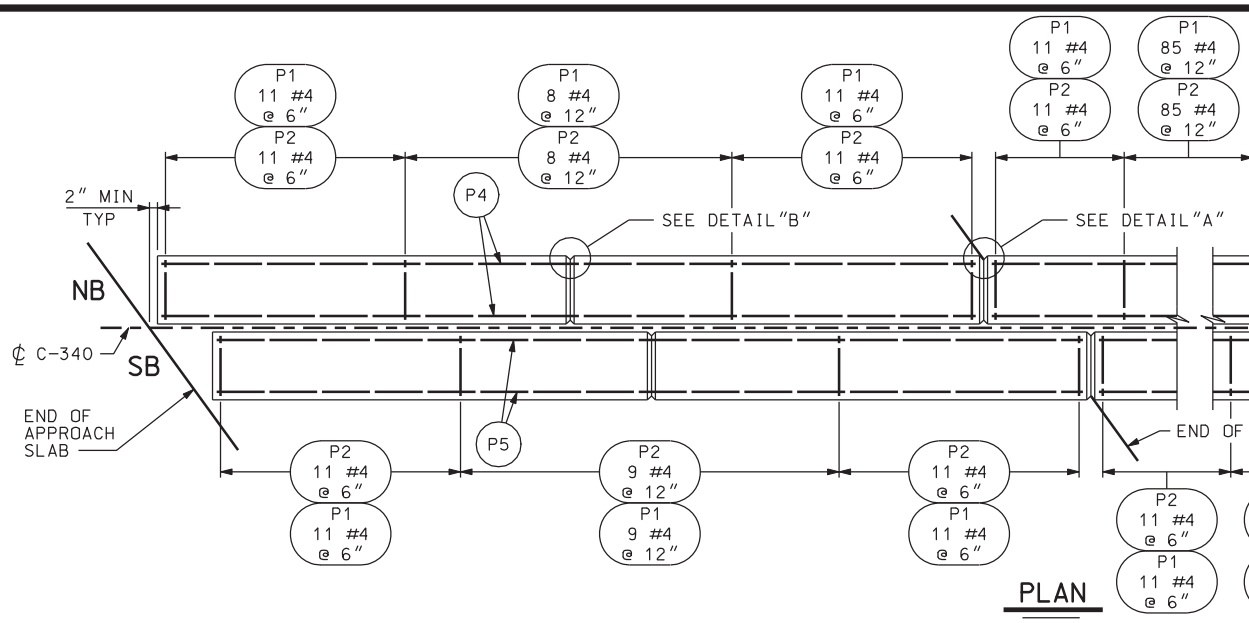


PLAN

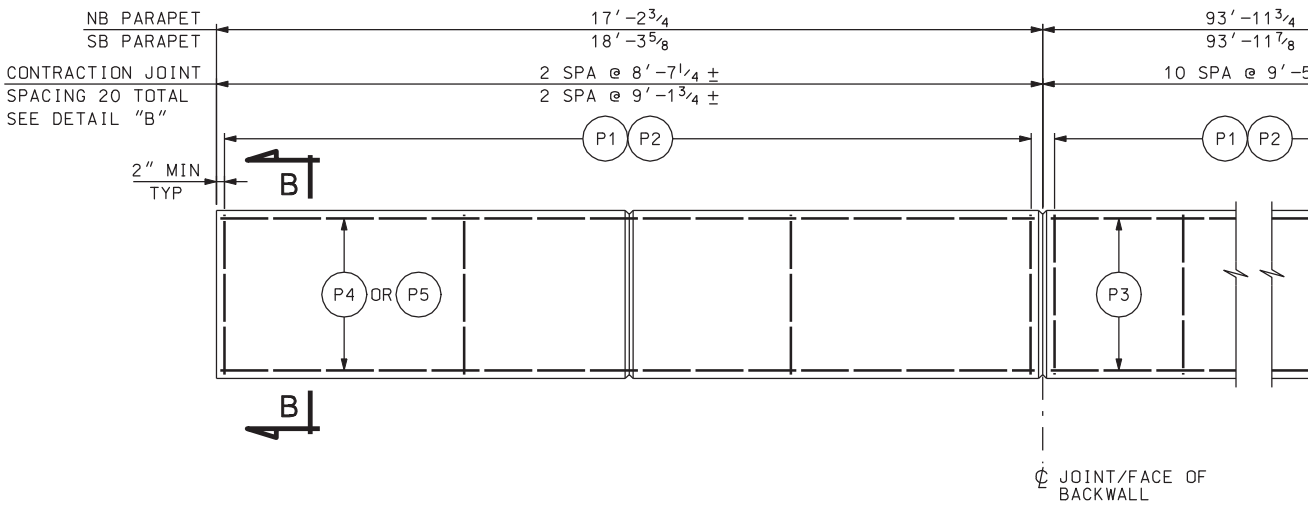


ELEVAT

ALL DIMENSIONS SHOWN ARE

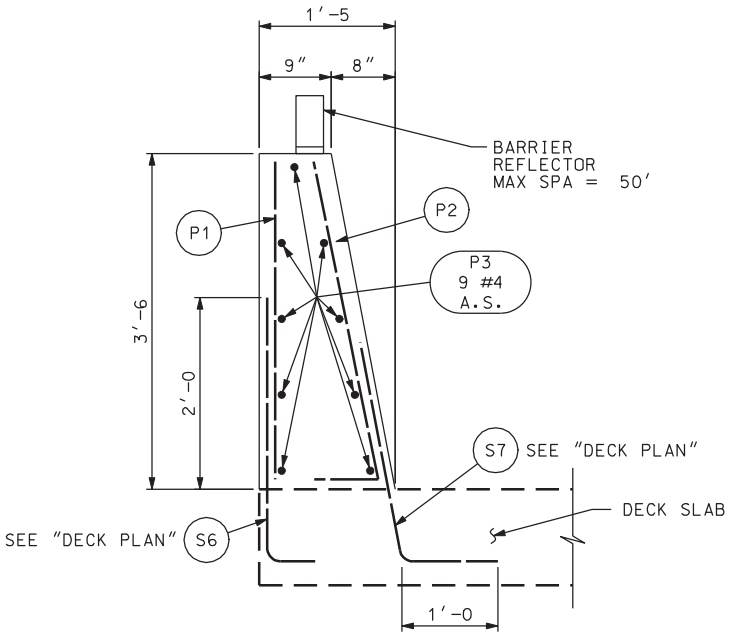


SECTION A-A

NB PARAPET SHOWN, SB SIMILAR

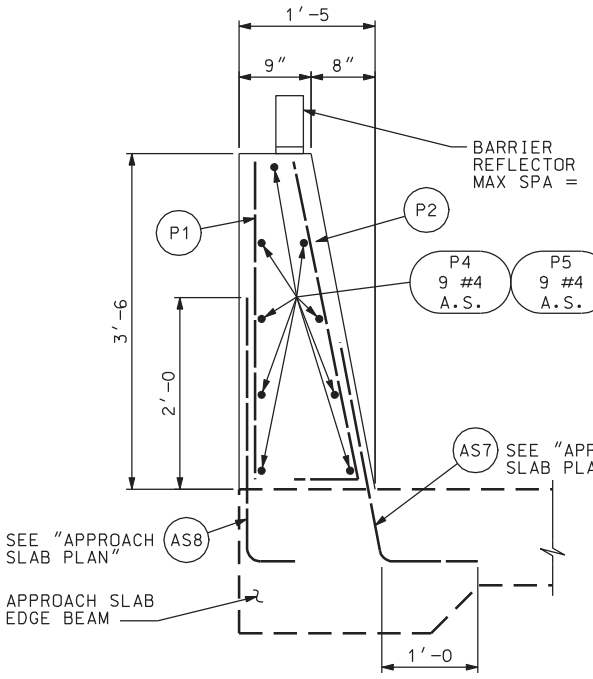


SECTION B-B

NB PARAPET SHOWN, SB SIMILAR

DGN File:IP_PWPcdns1717\4433_C-340-22_PARA01.dgn

02-MAY-2005

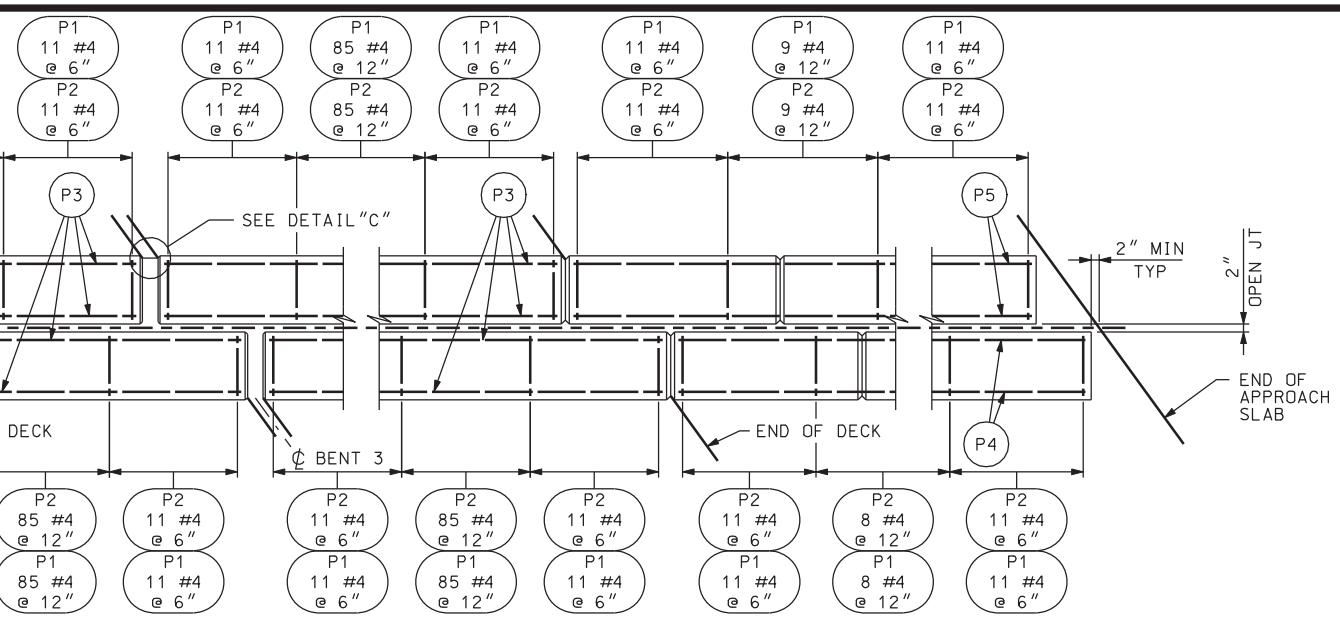


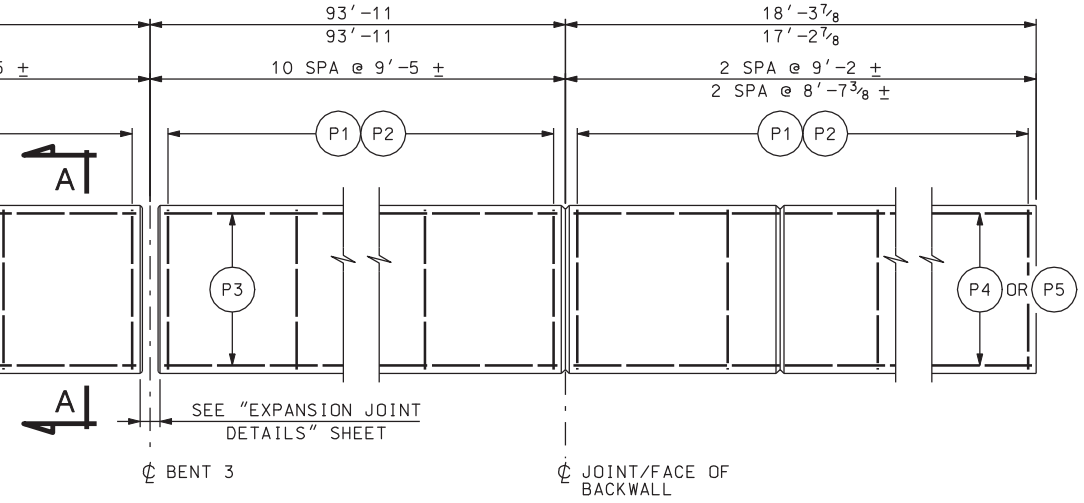


ION

ALONG EDGE OF DECK

50'

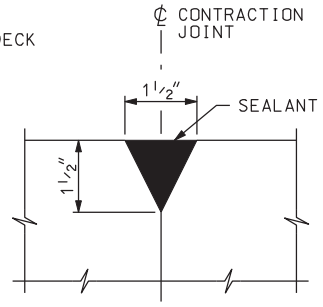


## DETAIL "B"

CONTRACTION JOINT

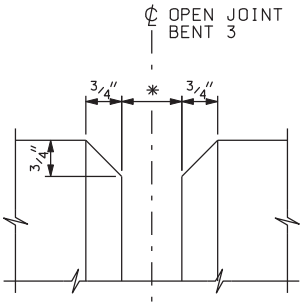


## DETAIL "C"

OPEN JOINT

* SEE "EXPANSION JOINT DETAILS" SHEET

PROACH
AN"

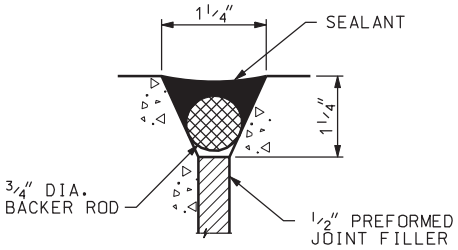


## DETAIL "A"

AT END OF BRIDGE DECK

## NOTES

1. ALTERNATE ALL REINFORCING STEEL SPLICES.
2. PROVIDE 2" MIN. COVER TO REINFORCING STEEL UNLESS NOTED OTHERWISE.
3. PLACE CONTRACTION JOINT ON SIDES AND TOP OF PARAPET.
4. EXTEND SEALANT AND FOAM BACKER ROD FROM DECK TO TOP OF PARAPET ON THE INSIDE PARAPET FACE AND ACROSS TOP OF PARAPET.
5. FOR END DETAILS OF PARAPET, SEE "PARAPET END DETAILS" SHEET.
6. ADJUST BAR SPACING AS REQUIRED TO NOT EXCEED MAXIMUM SPACING SHOWN.

| QUANTITIES | |
|---|---|
| STRUCTURAL CONCRETE | |
| NB & SB PARAPETS | 62.8 CY |

| NO. | DATE | BY | REMARKS |
|---|---|---|---|
| | | | |

REVISIONS

UTAH DEPARTMENT OF TRANSPORTATION
SALT LAKE CITY, UTAH
STRUCTURES DIVISION

DESIGN KMR 10/04 CHECK KTF 10/04
DRAWN RDF 10/04 CHECK KTF 10/04
QUANT. KTF 10/04 CHECK KMR 10/04

APPROVAL RECOMM. DATE SENIOR DESIGN ENGR.
APPROVED FOR USE BY UDOT DATE UDOT BRIDGE ENGR.

I-15; CORRIDOR IN UTAH COUNTY
NORTH LEHI INTERCHANGE
PARAPET DETAILS

PROJECT NUMBER SP-15-6(52)241

UTAH
COUNTY

C-340W
DRG. NO.

SHT. 22 OF 28

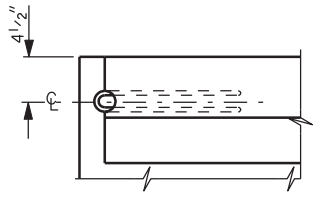


PLAN

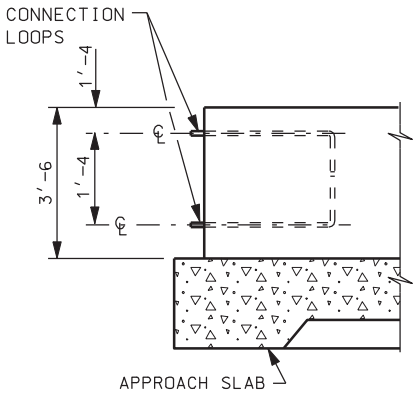


ELEVATION

STANDARD END DETAILS

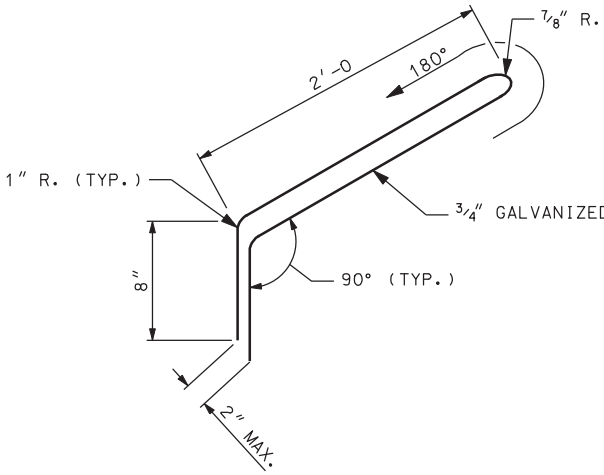


CONNECTION LOOP DETAIL

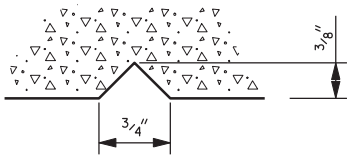


TYPICAL SECTION

THRU STRUCTURE NUMBER

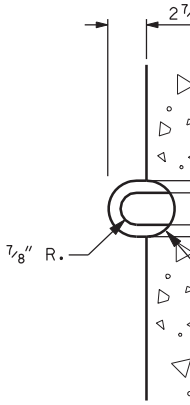


CON

DGN File:IP_PWPcdms1717\4433_C-340-23_PAREND01.dgn

02-MAY-2005

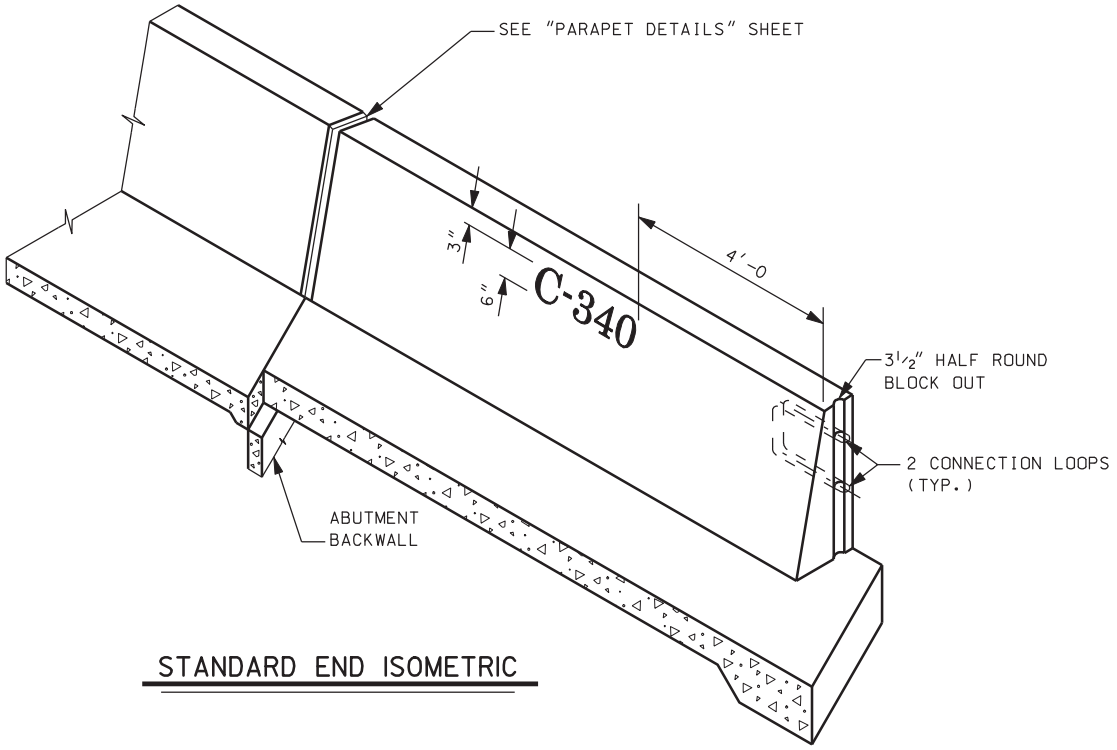


STANDARD END ISOMETRIC

D STEEL BAR

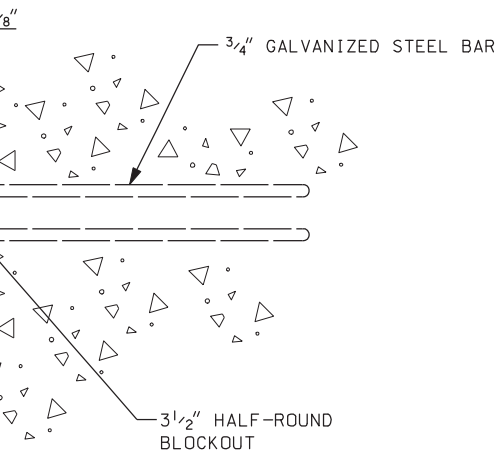


NECTION BAR END DETAIL

## NOTES

1. INSTALL CONNECTION LOOPS AT ALL PARAPET ENDS.
2. CONNECTION LOOPS NOT INCLUDED IN REINFORCING STEEL SCHEDULE.
3. SEE ROADWAY DRAWING DT-08 FOR TRANSITION FROM PARAPET TO PRECAST BARRIER.

| NO. | DATE | BY | REMARKS |
|---|---|---|---|

REVISIONS

UTAH DEPARTMENT OF TRANSPORTATION
SALT LAKE CITY, UTAH
STRUCTURES DIVISION

DESIGN PBB 10/04 CHECK KMR 10/04
DRAWN RDF 10/04 CHECK KMR 10/04
QUANT. CHECK

APPROVAL RECOMM. DATE SENIOR DESIGN ENGR.
APPROVED FOR USE BY UDOT DATE UDOT BRIDGE ENGR.

I-15; CORRIDOR IN UTAH COUNTY
NORTH LEHI INTERCHANGE
PARAPET END DETAILS
PROJECT NUMBER SP-15-6(52)241

UTAH
COUNTY

C-340W
DRG. NO.

SHT. 23 OF 28

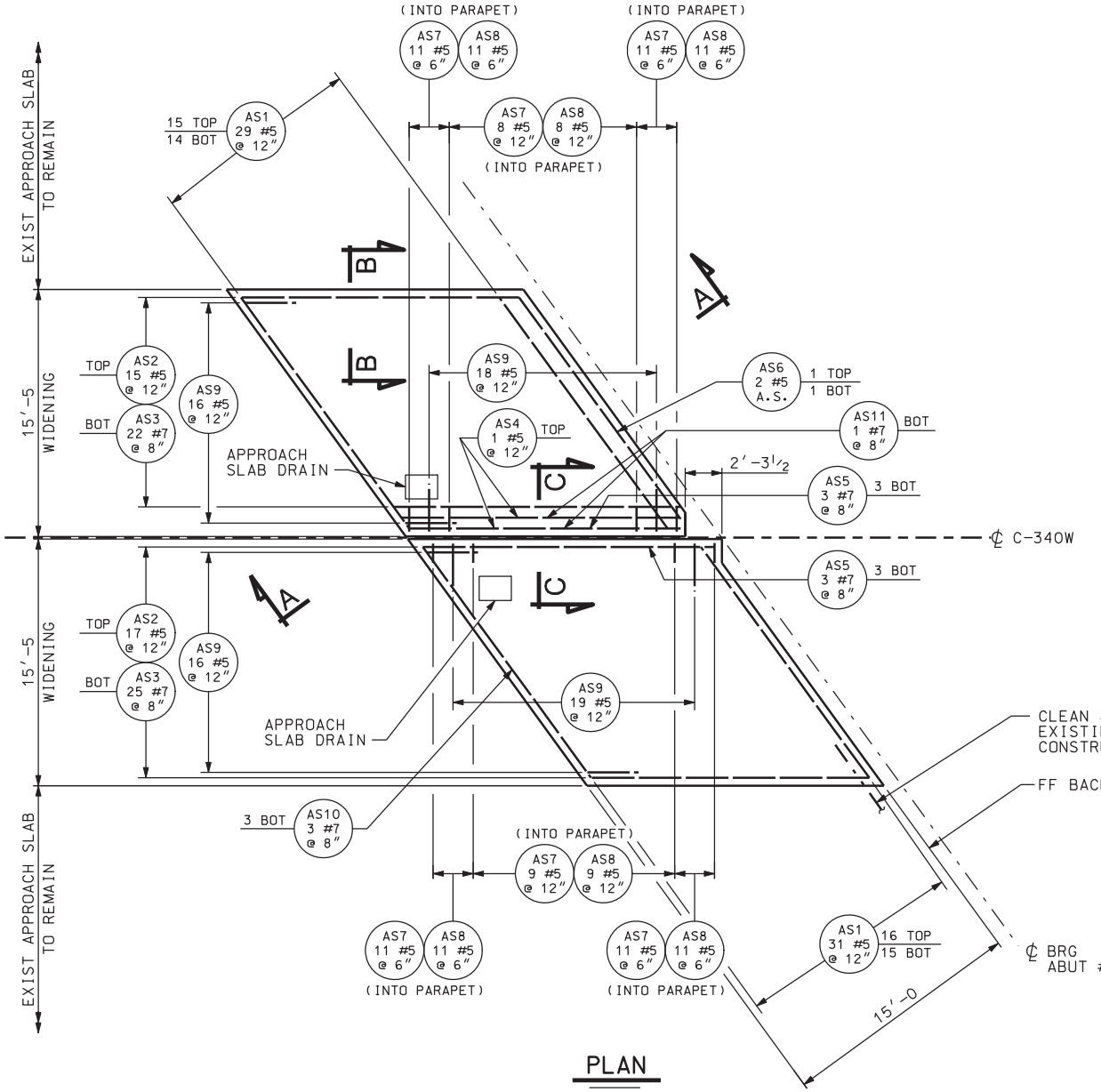


## PLAN

ABUT #1 APPROACH SLAB SHOWN, ABUT #5 SIMILAR.

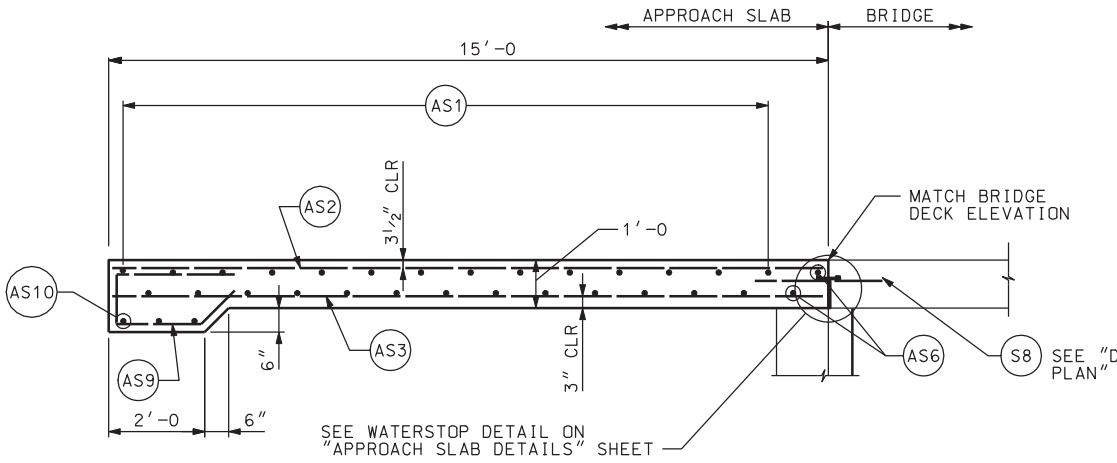


## SECTION A-A

DGN File: IP_PWPcdns1717\4433_C-340-24_APPSLB01.dgn

02-MAY-2005

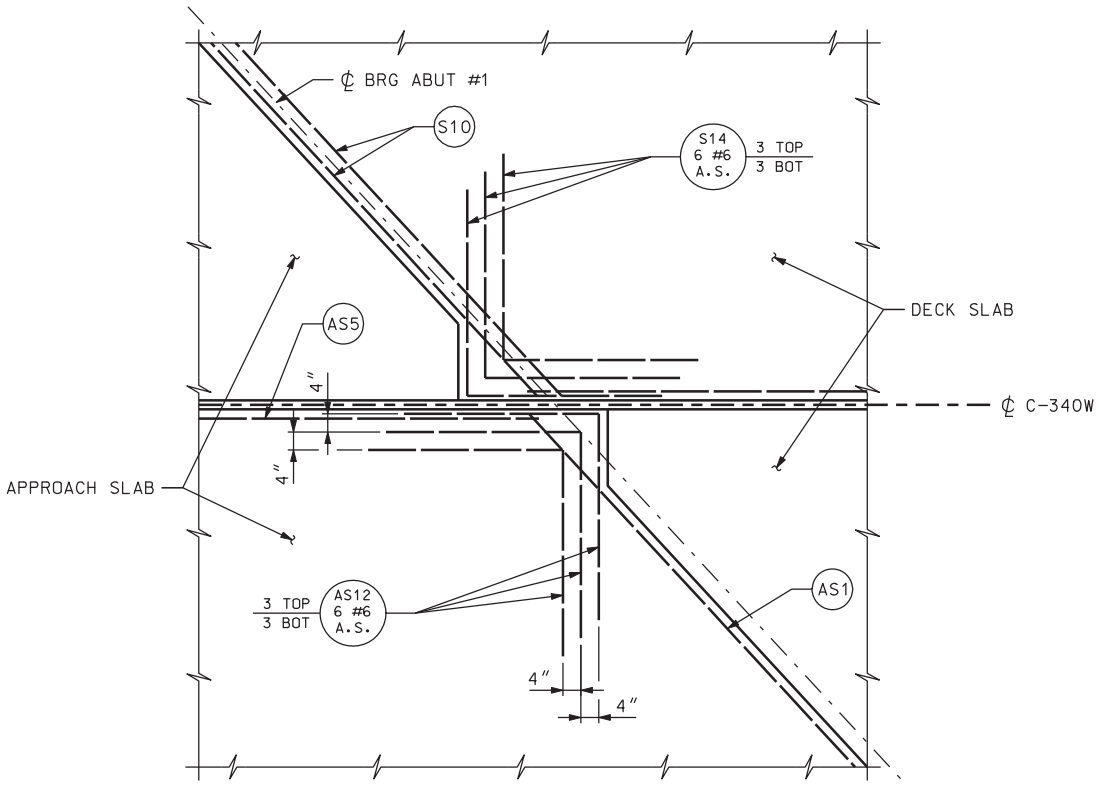


## CORNER REINFORCING DETAIL

ABUT #1 IS SHOWN, ABUT #5 AND BENT #3 ARE SIMILAR
SEE "DECK SLAB PLAN" SHEET AND APPROACH
SLAB PLAN FOR REINFORCING NOT SHOWN FOR CLARITY

& INCORPORATE
NG BARS INTO NEW
UCTION (TYP)

KWALL

#1

DECK SLAB
SHEET

| APPROACH SLAB DRAIN LOCATIONS | |
|---|---|
| STATION | OFFSET |
| 1001+03.59 | 2.67' LT |
| 1001+07.45 | 2.67' RT |

## NOTES

1. SEE "APPROACH SLAB DETAILS" SHEET FOR SECTIONS B-B AND C-C.
2. FOR APPROACH SLAB ELEVATIONS, SEE "SCREED ELEVATIONS" SHEET.
3. APPROACH SLAB DRAIN LOCATIONS SHOWN ARE AT CENTER OF DRAIN GRATE. SEE "APPROACH SLAB DRAIN DETAILS".
4. STAGGER (AS1) BARS SUCH THAT THE TOP BARS ARE OFFSET 6" FROM BOTTOM BARS.

| QUANTITIES STRUCTURAL CONCRETE | |
|---|---|
| APPROACH NB & SB | 49.7 CY |

REVISIONS

| NO. | DATE | BY | REMARKS |
|---|---|---|---|
| | | | |

UTAH DEPARTMENT OF TRANSPORTATION
SALT LAKE CITY, UTAH
STRUCTURES DIVISION

DESIGN KMR 10/04 CHECK KTF 10/04
DRAWN RDF 10/04 CHECK KTF 10/04
QUANT. KMR 10/04 CHECK

APPROVAL RECOMM. DATE SENIOR DESIGN ENGR.
APPROVED FOR USE BY UDOT DATE UDOT BRIDGE ENGR.

I-15; CORRIDOR IN UTAH COUNTY
NORTH LEHI INTERCHANGE
APPROACH SLAB PLAN
PROJECT NUMBER SP-15-6(52)241

UTAH
COUNTY

C-340W
DRG. NO.

SHT. 24 OF 28

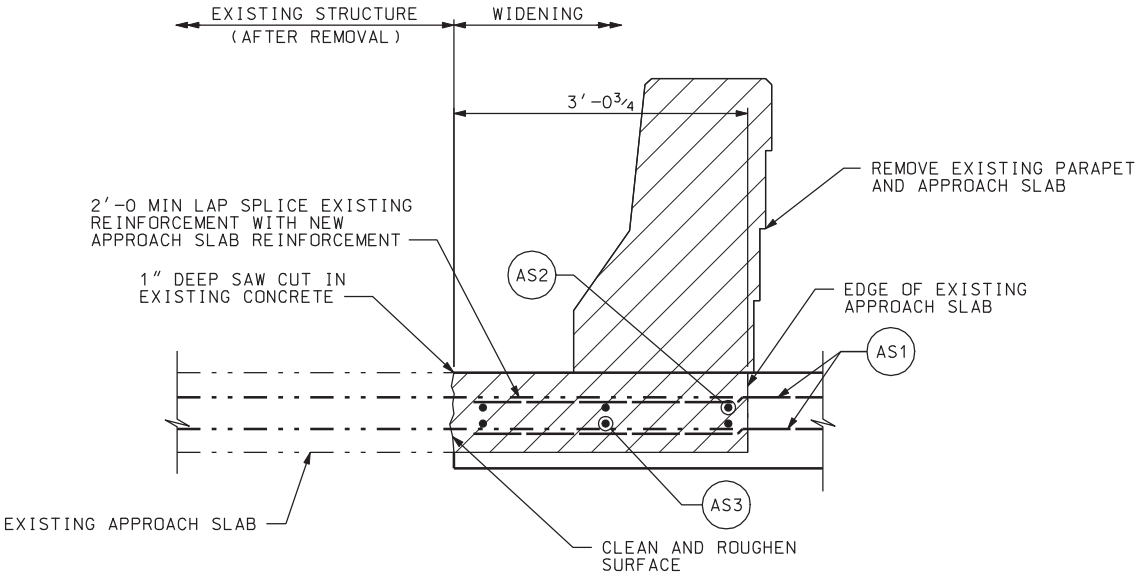


## SECTION B-B

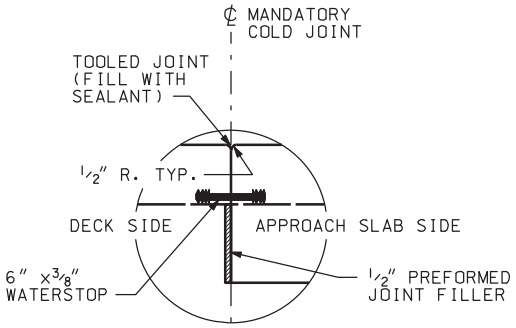


## WATERSTOP DETAIL

NOTE: THE COST OF CONCRETE REMOVAL IS INCIDENTAL TO THE COST OF "PREPARE BRIDGE FOR WIDENING" BID ITEM. SEE THE SPECIAL PROVISIONS FOR "PREPARE BRIDGE WIDENING".

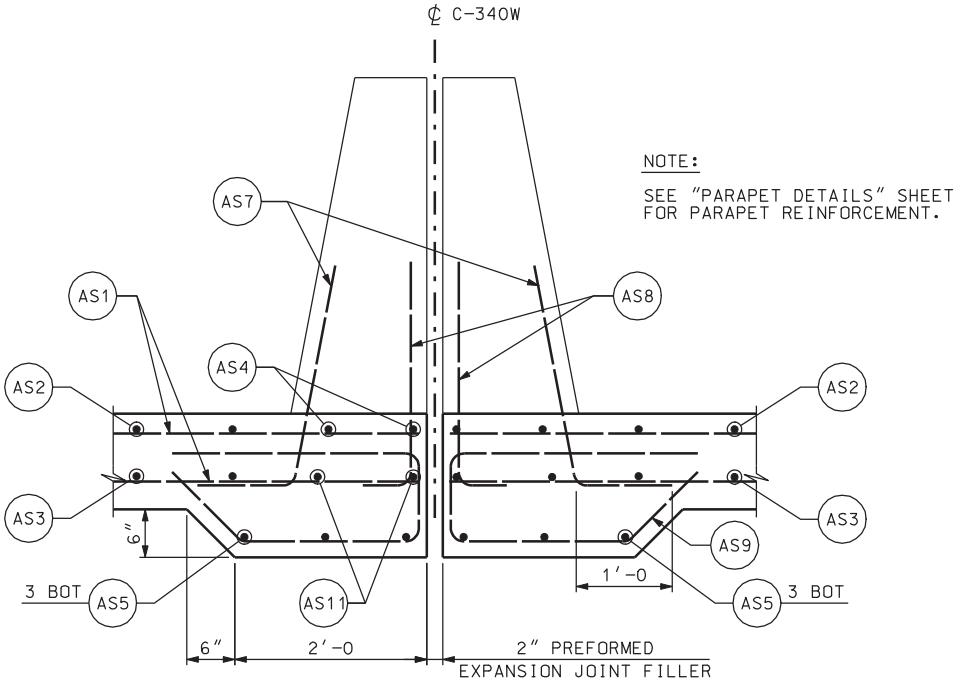


## SECTION C-C

| NO. | DATE | BY | REMARKS |
|---|---|---|---|

REVISIONS

UTAH DEPARTMENT OF TRANSPORTATION
SALT LAKE CITY, UTAH
STRUCTURES DIVISION

DESIGN KMR 10/04 CHECK KTF 10/04
DRAWN RDF 10/04 CHECK KTF 10/04
QUANT. CHECK

APPROVAL RECOMM. DATE SENIOR DESIGN ENGR.
APPROVED FOR USE BY UDOT DATE UDOT BRIDGE ENGR.

I-15; CORRIDOR IN UTAH COUNTY
NORTH LEHI INTERCHANGE
APPROACH SLAB DETAILS

PROJECT NUMBER SP-15-6(52)241

UTAH
COUNTY

C-340W
DRG. NO.

SHT. 25 OF 28

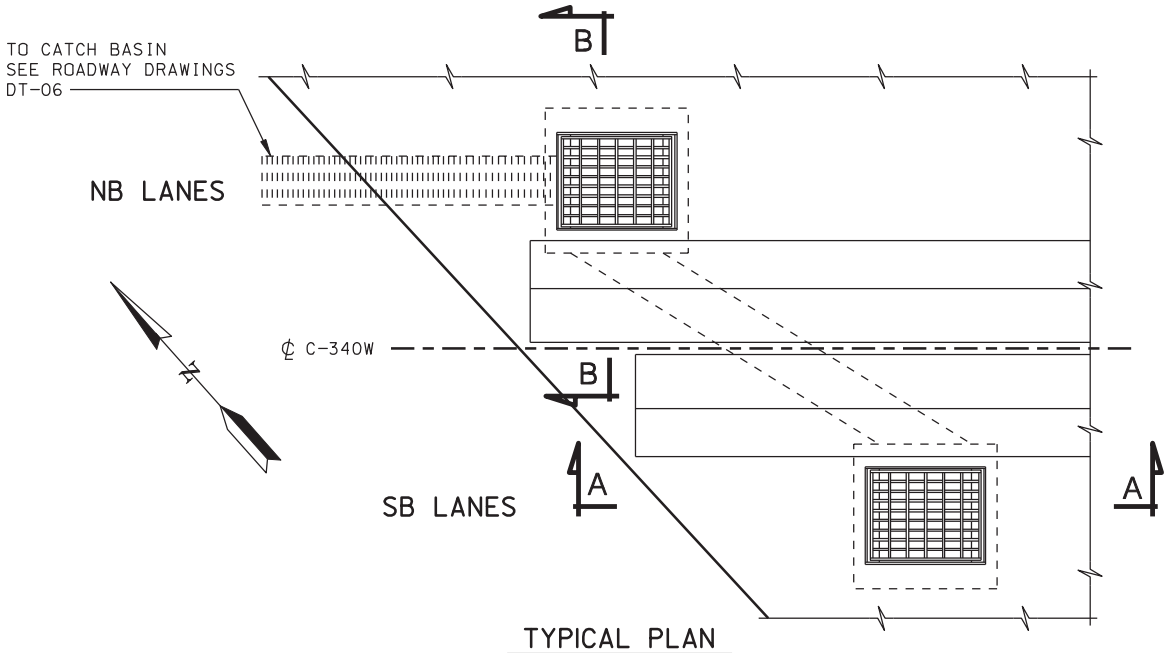


TYPICAL PLAN

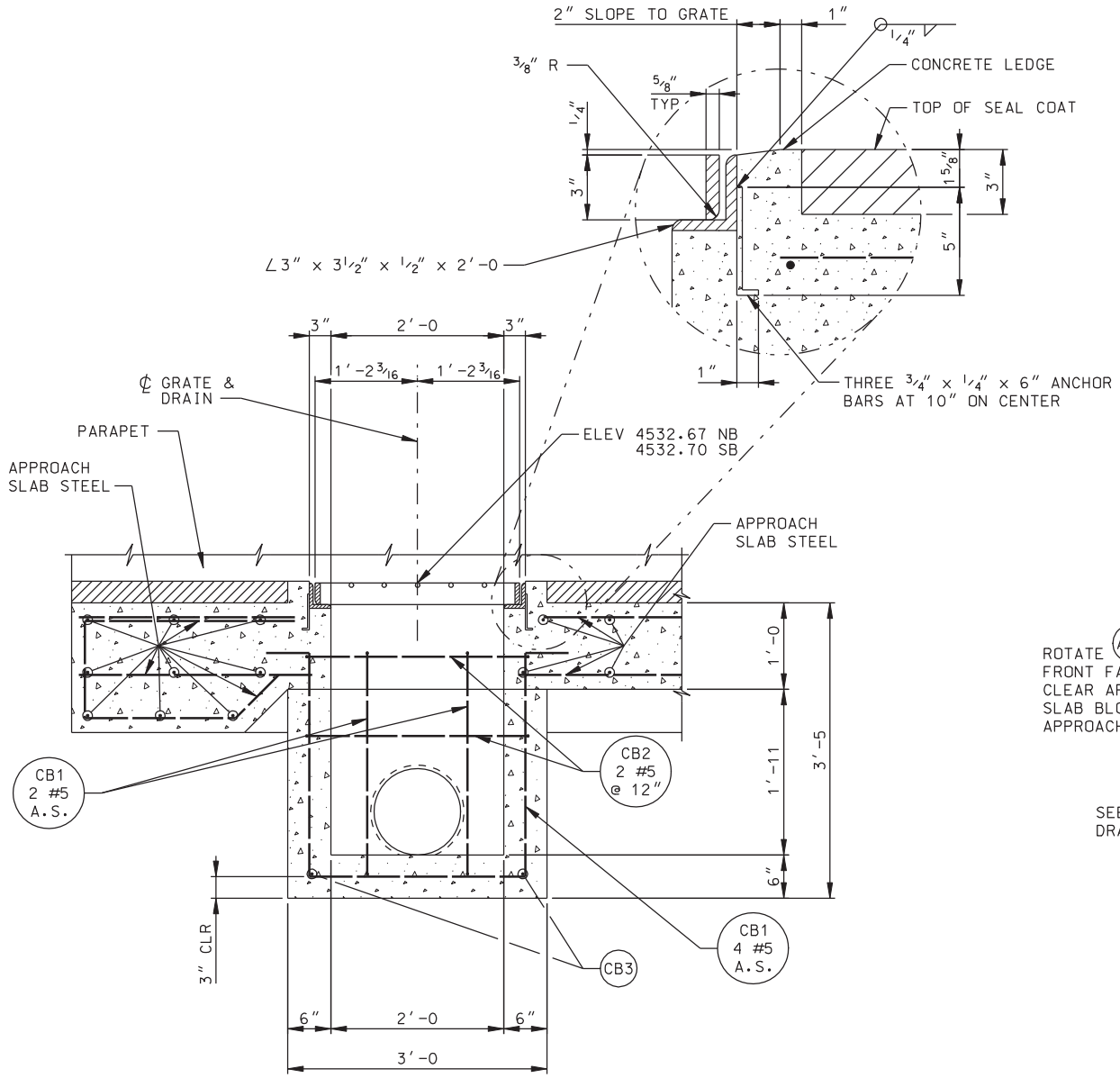


SECTION A-A

DGN File:IP_PWPcdms1717\4433_C-340-26_APPDRN01.dgn

02-MAY-2005

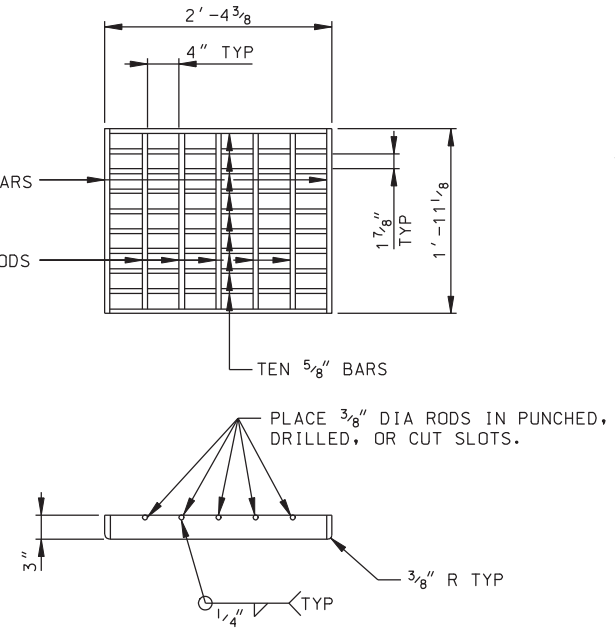


GRATE DETAIL

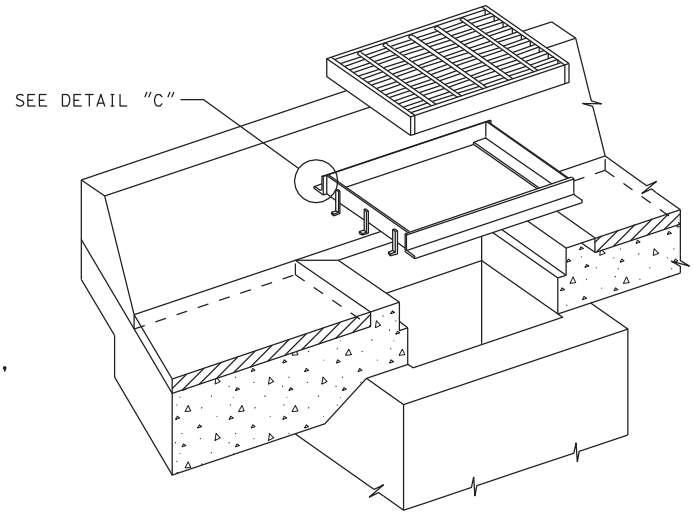


ISOMETRIC

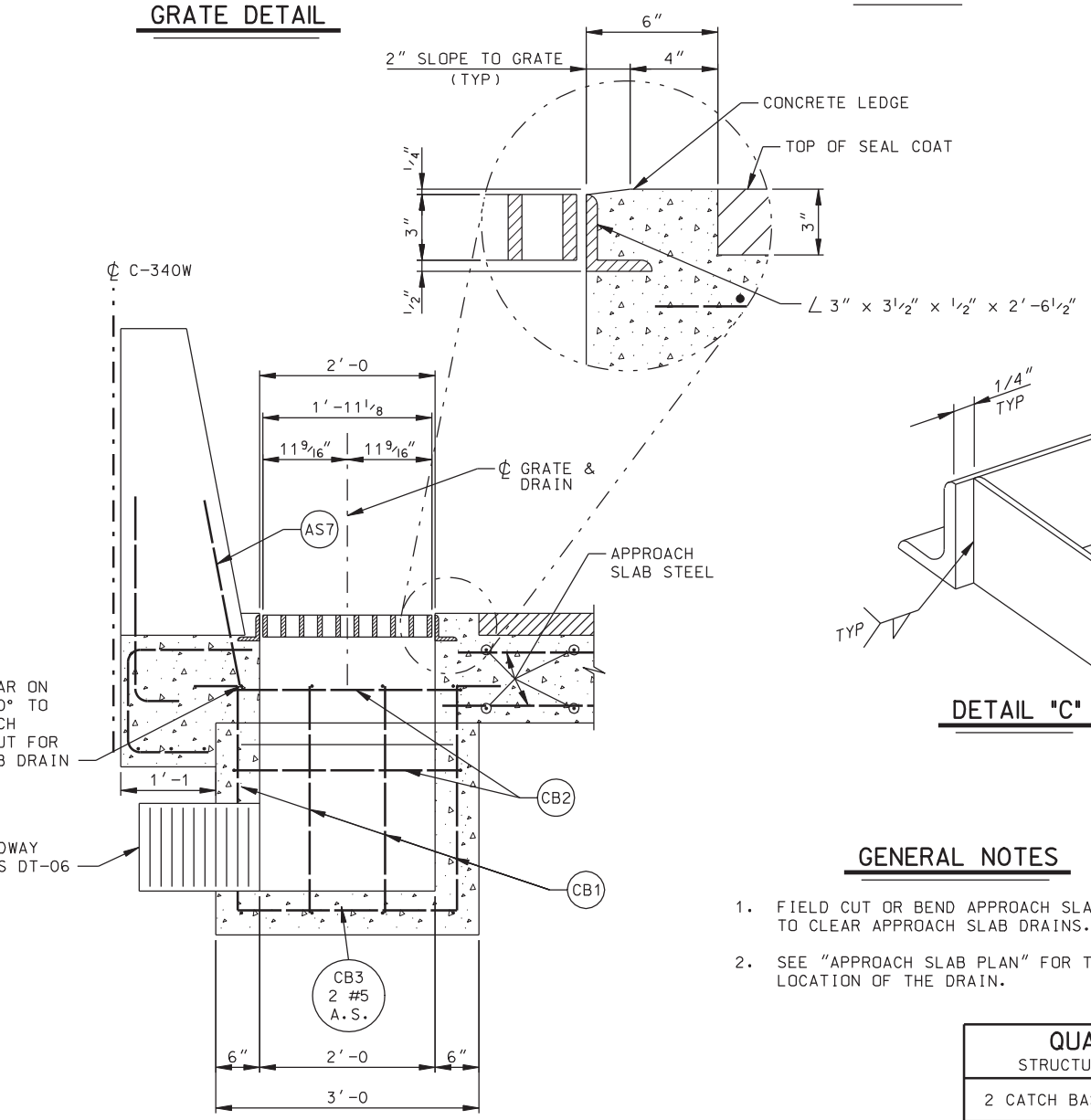


SECTION B-B

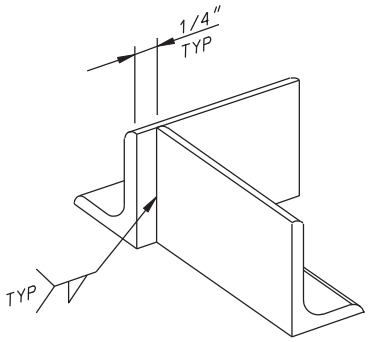


DETAIL "C"

## GENERAL NOTES

1. FIELD CUT OR BEND APPROACH SLAB REINFORCING TO CLEAR APPROACH SLAB DRAINS.
2. SEE "APPROACH SLAB PLAN" FOR THE ACTUAL LOCATION OF THE DRAIN.

| QUANTITIES STRUCTURAL CONCRETE | |
|---|---|
| 2 CATCH BASINS | 1.0 CY |

| QUANTITIES STRUCTURAL STEEL | |
|---|---|
| 2 GRATES & FRAMES | 546 LBS |

| NO. | DATE | BY | REMARKS |
|---|---|---|---|
| | | | |

REVISIONS

UTAH DEPARTMENT OF TRANSPORTATION
SALT LAKE CITY, UTAH
STRUCTURES DIVISION

DESIGN KMR 10/04 CHECK KTF 10/04
DRAWN RDF 10/04 CHECK KTF 10/04
QUANT. CHECK

APPROVAL RECOMM. DATE SENIOR DESIGN ENGR.
APPROVED FOR USE BY UDOT DATE UDOT BRIDGE ENGR.

I-15; CORRIDOR IN UTAH COUNTY
NORTH LEHI INTERCHANGE
APPROACH SLAB DRAIN DETAILS

PROJECT NUMBER SP-15-6(52)241

UTAH
COUNTY

C-340W
DRG. NO.

SHT. 26 OF 28

# REINFORCING ST

| | MARK | SIZE | NUM | LENGTH | TOTAL | DIAGRAM |
|---|---|---|---|---|---|---|
| DECK | S1 | 5 | 124 | 98′-8 | 12,234′-8 | 2′-6, 2′-6, 93′-8 |
| | NUMBER OF SPLICES = 2 | | | | | |
| | S2 | 5 | 808 | 15′-1 | 12,187′-4 | 15′-1 |
| | S3 | 5 | 60 | 25′-0 | 1500′-0 | 25′-0 |
| | S4 | 5 | 328 | 6′-0 | 1968′-0 | 6′-0 |
| | S5 | 5 | 504 | 8′-0½ | 4053′-0 | VARIES 1′-0 TO 15′-1 |
| | NO OF SETS | 8 | | | | |
| | BARS/ SET | 63 | | | | |
| | S6 | 5 | 428 | 3′-1 | 1319′-8 | 7″, 2′-7 |
| | S7 | 5 | 428 | 4′-0 | 1712′-0 | 101°, 1′-0, 3′-2 |
| | S8 | 5 | 64 | 4′-0 | 256′-0 | 4′-0 |
| | S9 | 5 | 176 | 3′-4 | 586′-8 | 7″, 7″, 135°, 135°, 8″, 11″, 1′-1 |
| | S10 | 5 | 16 | 18′-7 | 297′-4 | 18′-7 |
| | S11 | 5 | 48 | 5′-3 | 252′-0 | 7″, 7″, 135°, 135°, 135°, 135°, 11″, 11″, 2′-8 |
| | S12 | 5 | 64 | 6′-3 | 400′-0 | 6′-3 |
| | S13 | 6 | 20 | 8′-0 | 160′-0 | 8′-0 |
| | S14 | 6 | 24 | 7′-2 | 172′-0 | 3′-8, 3′-8 |
| APPROACH SLAB | AS1 | 5 | 120 | 18′-8 | 2240′-0 | 18′-8 |
| | AS2 | 5 | 64 | 18′-2 | 1162′-8 | 18′-2 |
| | AS3 | 7 | 94 | 18′-2 | 1707′-8 | 18′-2 |
| | AS4 | 5 | 4 | 17′-0 | 68′-0 | 17′-0 |

| | MARK | SIZE | NUM | LENGTH | TOTA |
|---|---|---|---|---|---|
| APPROACH SLAB | AS5 | 7 | 12 | 17′-0 | 204′ |
| | AS6 | 5 | 4 | 17′-3 | 69′ |
| | AS7 | 5 | 122 | 4′-1 | 498′ |
| | AS8 | 5 | 122 | 3′-1 | 376′ |
| | AS9 | 5 | 138 | 5′-6 | 759′ |
| | AS10 | 7 | 12 | 18′-8 | 224′ |
| | AS11 | 7 | 4 | 17′-0 | 68′ |
| | AS12 | 6 | 12 | 7′-2 | 86′ |
| PARAPETS | P1 | 4 | 550 | 3′-2 | 1741 |
| | P2 | 4 | 550 | 3′-9 | 2062 |
| | P3 | 4 | 36 | 98′-6 | 3546 |
| | NUMBER OF SPLICES = 2 | | | | |
| | P4 | 4 | 18 | 16′-10 | 303′ |
| | P5 | 4 | 18 | 17′-11 | 322′ |
| FOOTING | F11 | 8 | 204 | 10′-6 | 2142′ |
| | F12 | 10 | 168 | 10′-6 | 1764′ |
| | F13 | 5 | 624 | 4′-6 | 2808′ |
| COLUMN | C21 | 8 | 40 | 24′-1 | 963′ |
| | C22 | 5 | 354 | 11′-8 | 4130′ |

DGN File: IP_PWPrdnsl1717\4433_C-340-27_RBSCH01.dgn

02-MAY-2005

# TEEL SCHEDULE

| AL | DIAGRAM |
|---|---|
| -0 | 17′-0 |
| -0 | 17′-3 |
| -2 | 101°, 1′-0, 3′-2 |
| -2 | 7″, 2′-7 |
| -0 | 2′-6, 9″, 135°, 1′-0, 1′-8 |
| -0 | 18′-8 |
| -0 | 17′-0 |
| -0 | 3′-8, 3′-8 |
| ′-8 | 3′-2 |
| ′-6 | 7″, 79°, 3′-3 |
| ′-0 | 2′-6, 2′-6, 93′-6 |
| -0 | 16′-10 |
| -6 | 17′-11 |
| -0 | 10′-6 |
| -0 | 10′-6 |
| -0 | 3′-3 |
| -4 | 21′-10 |
| -0 | 2′-8, 2′-8 |

| | MARK | SIZE | NUM | LENGTH | TOTAL | DIAGRAM |
|---|---|---|---|---|---|---|
| COLUMN | C23 | 5 | 1416 | 5′-3 | 7434′-0 | 2′-6, 7″ |
| | C24 | 5 | 36 | 3′-8 | 132′-0 | 3′-0 |
| | C25 | 8 | 40 | 23′-4 | 933′-4 | 21′-1 |
| | C26 | 8 | 40 | 24′-6 | 980′-0 | 22′-3 |
| BENT CAP | B20 | 5 | 18 | 8′-2 | 147′-0 | 2′-6, 2′-6, 3′-5 |
| | B21 | 8 | 60 | 9′-0 | 540′-0 | 9′-0 |
| | B22 | 5 | 18 | 7′-3 | 130′-6 | 3′-0, 3′-0, 1′-6 |
| | B23 | 11 | 60 | 19′-7 | 1175′-0 | 16′-3 |
| | B24 | 9 | 60 | 16′-4 | 980′-0 | 164°, 169°, 5′-3, 3′-4, 7′-9 |
| | B25 | 5 | 36 | 16′-3 | 585′-0 | 16′-3 |
| | B26 | 5 | 24 | 11′-0 | 264′-0 | VARIES 8′-2 TO 13′-10 |
| | NO OF SETS | 2 | | | | |
| | BARS/ SET | 12 | | | | |
| | B27 | 5 | 168 | 10′-5 | 1750′-0 | VARIES 2′-2 TO 3′-8, VARIES 2′-2 TO 3′-8, 3′-5 |
| | NO OF SETS | 14 | | | | |
| | BARS/ SET | 12 | | | | |

| NO. | DATE | BY | REMARKS |
|---|---|---|---|
| | | | |

REVISIONS

UTAH DEPARTMENT OF TRANSPORTATION
SALT LAKE CITY, UTAH
STRUCTURES DIVISION

DESIGN RDF 11/04 CHECK PBB 11/04
DRAWN RDF 11/04 CHECK PBB 11/04
QUANT. PBB 11/04 CHECK JW 11/04

APPROVAL RECOMM. DATE SENIOR DESIGN ENGR.
APPROVED FOR USE BY UDOT DATE UDOT BRIDGE ENGR.

I-15; CORRIDOR IN UTAH COUNTY
NORTH LEHI INTERCHANGE
REINFORCING STEEL SCHEDULE 1

PROJECT NUMBER SP-15-6(52)241

UTAH
COUNTY

C-340W
DRG. NO.

SHT. 27 OF 28

# REINFORCING ST

| | MARK | SIZE | NUM | LENGTH | TOTAL | DIAGRAM |
|---|---|---|---|---|---|---|
| BENT CAP | B28 | 5 | 504 | 4′-8 | 2352′-0 | 3′-5 |
| | B29 | 5 | 336 | 4′-2 | 1400′-0 | VARIES 2′-2 TO 3′-8 |
| | NO OF SETS | 14 | | | | |
| | BARS/ SET | 24 | | | | |
| | B30 | 5 | 30 | 6′-0 | 180′-0 | 2′-0, 101°, 2′-0, 2′-2 |
| ABUTMENTS | A1 | 5 | 96 | 14′-8 | 1408′-0 | 14′-8 |
| | A2 | 5 | 32 | 7′-11 | 253′-4 | 7′-3 |
| | A3 | 5 | 64 | 6′-7 | 421′-4 | 1′-6, 1′-6, 3′-10 |
| | A4 | 5 | 64 | 8′-11 | 570′-8 | 4′-0, 4′-0, 1′-2 |
| | A5 | 5 | 64 | 3′-11 | 250′-8 | 2′-0, 2′-0 |
| | A6 | 5 | 5 | 4′-11 | 24′-7 | 4′-11 |
| | A7 | 5 | 14 | 3′-9 | 52′-6 | 2′-0, 63°, 2′-0 |
| | A8 | 5 | 128 | 5′-1 | 650′-8 | 3′-10 |
| | A9 | 5 | 32 | 9′-1 | 290′-8 | 8′-5 |
| | A10 | 5 | 32 | 9′-8 | 309′-4 | 9′-0 |
| | A11 | 5 | 32 | 10′-3 | 328′-0 | 9′-7 |
| | A12 | 5 | 5 | 6′-1 | 30′-5 | 6′-1 |
| | A13 | 5 | 5 | 6′-8 | 33′-4 | 6′-8 |
| | A14 | 5 | 5 | 7′-3 | 36′-3 | 7′-3 |
| | A15 | 5 | 88 | 3′-0 | 264′-0 | 3′-0 |

| | MARK | SIZE | NUM | LENGTH | TOTA |
|---|---|---|---|---|---|
| ABUTMENTS | F1 | 6 | 60 | 8′-5 | 505′ |
| | F2 | 8 | 60 | 12′-0 | 720′ |
| | F3 | 6 | 64 | 12′-8 | 810′ |
| INFILL WALL | W21 | 5 | 96 | 9′-9 | 936′ |
| | NO OF SETS | 8 | | | |
| | BARS/ SET | 12 | | | |
| | W22 | 5 | 60 | 18′-0 | 1080 |
| | NO OF SETS | 5 | | | |
| | BARS/ SET | 12 | | | |
| | W23 | 5 | 48 | 15′-9 | 756′ |
| | NO OF SETS | 4 | | | |
| | BARS/ SET | 12 | | | |
| | W25 | 5 | 192 | 11′-6½ | 2216 |
| | NO OF SETS | 16 | | | |
| | BARS/ SET | 12 | | | |
| | W26 | 5 | 12 | 20′-11 | 251′ |
| | W27 | 5 | 12 | 7′-11 | 95′ |
| | W28 | 5 | 12 | 5′-11 | 71′ |
| | W29 | 5 | 240 | 3′-6 | 840′ |
| | W30 | 5 | 114 | 3′-0 | 342′ |
| | W31 | 5 | 24 | 11′-2 | 268′ |

DGN File: IP_PWPcdms1717\4433_C-340-28_RBSCH02.dgn
02-MAY-2005

# TEEL SCHEDULE

| AL | DIAGRAM |
|---|---|
| -0 | 8′-5 |
| -0 | 2′-0, 8′-5, 2′-0 |
| -8 | 12′-8 |
| -0 | VARIES 1′-2 TO 18′-4 |
| ′-0 | VARIES 17′-7 TO 18′-5 |
| -0 | VARIES 15′-6 TO 16′-0 |
| ′-0 | VARIES 8′-6 TO 14′-7 |
| -0 | 18′-5, 1′-2, 159°, 7′-2½ |
| -0 | 7′-11 |
| -0 | 5′-11 |
| -0 | 3′-6 |
| -0 | 3′-0 |
| -0 | 11′-2 |

| | MARK | SIZE | NUM | LENGTH | TOTAL | DIAGRAM |
|---|---|---|---|---|---|---|
| | | | | | | |

## SUMMARY

#4 @ 0.668 LBS/FT = 5319 LBS
#5 @ 1.043 LBS/FT = 77,966 LBS
#6 @ 1.502 LBS/FT = 2604 LBS
#7 @ 2.044 LBS/FT = 4504 LBS
#8 @ 2.670 LBS/FT = 16,763 LBS
#9 @ 3.400 LBS/FT = 3327 LBS
#10 @ 4.303 LBS/FT = 7591 LBS
#11 @ 5.313 LBS/FT = 6234 LBS

TOTAL = 124,309 LBS

## NOTES

1. ALL DIMENSIONS ARE OUT TO OUT BAR UNLESS NOTED OTHERWISE.
2. ALL ANGLES ARE 90° UNLESS NOTED OTHERWISE.
3. ALL BARS ARE COATED.
4. SPLICES MAY BE OMITTED AT FABRICATOR'S OPTION. FABRICATOR ASSUMES RESPONSIBILITY FOR FIT. SPLICES ARE BASED ON 40 FT BAR LENGTHS.
5. ALL REINFORCING STEEL IS INCLUDED IN THE PAY ITEM REINFORCING STEEL-COATED.

| NO. | DATE | BY | REMARKS |
|---|---|---|---|
| | | | |

REVISIONS

UTAH DEPARTMENT OF TRANSPORTATION
SALT LAKE CITY, UTAH
STRUCTURES DIVISION

DESIGN RDF 11/04 CHECK PBB 11/04
DRAWN RDF 11/04 CHECK PBB 11/04
QUANT. PBB 11/04 CHECK JW 11/04

APPROVAL RECOMM. DATE SENIOR DESIGN ENGR.
APPROVED FOR USE BY UDOT DATE UDOT BRIDGE ENGR.

I-15; CORRIDOR IN UTAH COUNTY
NORTH LEHI INTERCHANGE
REINFORCING STEEL SCHEDULE 2

PROJECT NUMBER SP-15-6(52)241

UTAH
COUNTY

C-340W
DRG. NO.

SHT. 28 OF 28

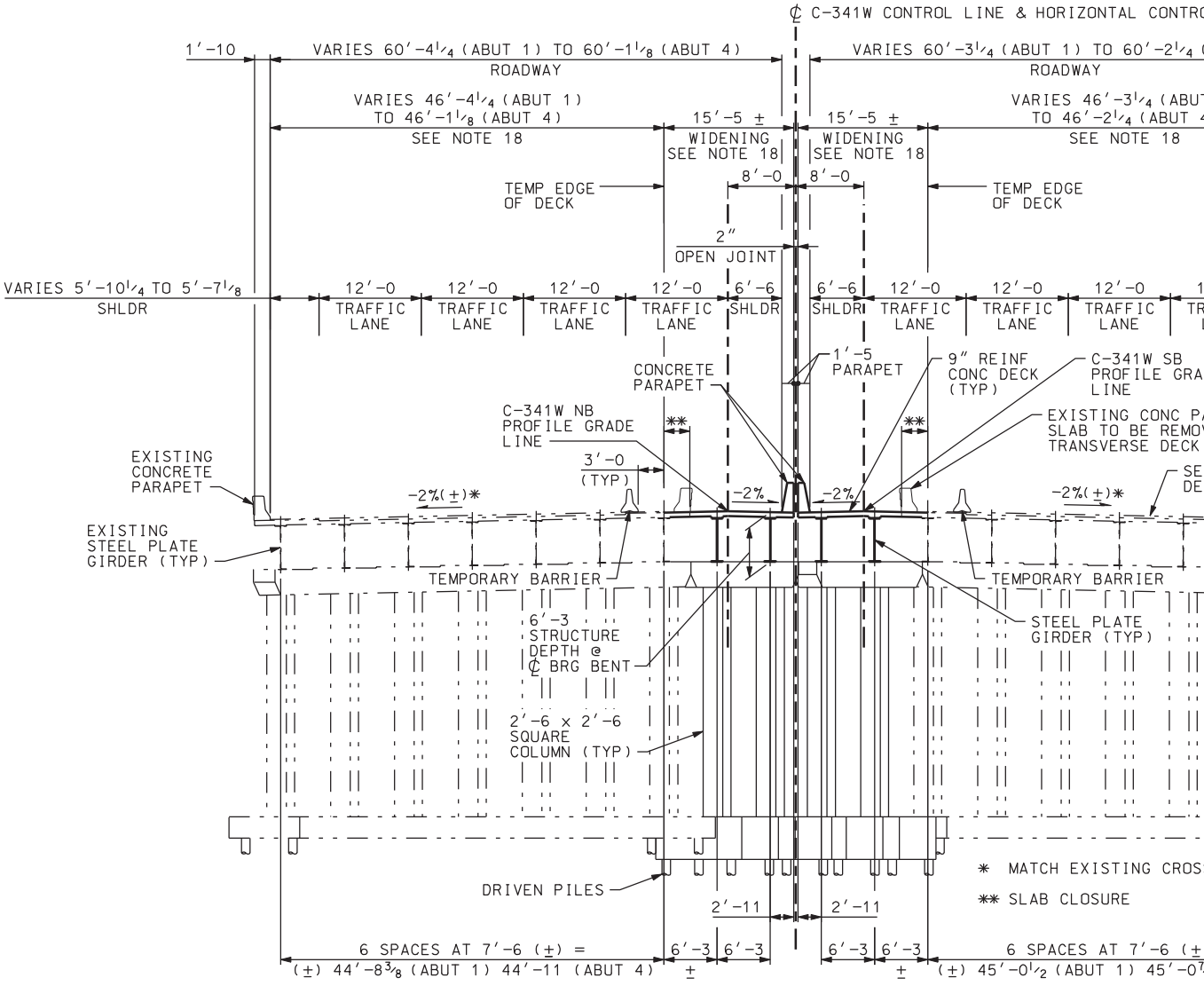


## SECTION THRU STRUCTURE

## GENERAL NOTES

1. USE COATED DEFORMED BILLET-STEEL BARS CONFORMING TO AASHTO M 284 OR M 111 AND M 31 GRADE 60 FOR ALL REINFORCING STEEL.
2. CONFORM ALL STRUCTURAL STEEL TO AASHTO M 270 GRADE 36 MIN., EXCEPT WHERE NOTED OTHERWISE.
3. CHAMFER ALL EXPOSED CONCRETE CORNERS 3/4" EXCEPT WHERE NOTED OTHERWISE.
4. PROVIDE 2" CONCRETE COVER TO REINFORCING STEEL EXCEPT WHERE NOTED OTHERWISE.
5. USE CLASS AA (AE) FOR CAST-IN-PLACE CONCRETE EXCEPT WHERE SPECIFIED OTHERWISE.
6. ALL NEW SUBSTRUCTURE ELEMENTS ARE DESIGNED TO ALIGN WITH A BEST FIT LINE CONNECTING EXISTING ELEMENTS. FIELD VERIFY ALL CONTROLLING DIMENSIONS PRIOR TO CONSTRUCTION AND FABRICATION OF ANY MATERIALS. REPORT ANY DISCREPANCY BETWEEN THESE PLANS AND THE EXISTING STRUCTURE TO THE ENGINEER. DO NOT CONSTRUCT OR FABRICATE ANY ELEMENTS UNTIL THE DISCREPANCIES ARE RESOLVED. ALL STRUCTURE GEOMETRY IS BASED ON LOCAL SURVEY CONTROL POINTS SHOWN ON THE FOUNDATION PLAN. THE I-15 STATIONING AND ALIGNMENT IS FOR INFORMATION ONLY. ABUTMENT/PIER DIRECTIONS AND LOCATIONS USED IN DESIGN ARE LISTED.
7. ALL DECK, APPROACH SLAB AND PROFILE GRADE ELEVATIONS ARE AT TOP OF CONCRETE.
8. VERIFY RELATIVE ELEVATION DIFFERENCES BETWEEN C-341 AND C-341W AT BOTTOM OF NBL AND SBL INTERIOR MOST EXISTING BEAMS AT FACE OF BENT #2, SEE "DECK SECTIONS 1" SHEET. IF THE RELATIVE ELEVATION DIFFERENCES VARY BY MORE THAN +/- 1", ADJUST ALL PLAN ELEVATIONS ACCORDINGLY AND SUBMIT TO THE ENGINEER FOR APPROVAL BEFORE MAKING ANY ADJUSTMENTS IN THE FIELD.
9. SEE EXISTING STRUCTURE C-341 PLA
10. DO NOT SCALE DRAWINGS.
11. HORIZONTAL DIMENSIONS ARE PLAN.
12. PROVIDE SHORING DESIGN TO MEET T GENERAL SHORING REQUIREMENTS C.E FOR OVERHEAD FALSEWORK.
13. DO NOT PERFORM WORK WITHIN 25 FE TRAIN PASSES THE SIGHT.
14. DO NOT DISCHARGE DRAINAGE FROM C RIGHT-OF-WAY.
15. OBTAIN UPRR APPROVAL PRIOR TO DE DEMOLISH IN ACCORDANCE WITH UPRR
16. MAINTAIN MINIMUM CONSTRUCTION CL THE PLANE OF TOP-OF-RAIL AND 7' CENTERLINE OF TRACK.
17. POT STATION EQUATION POINTS FROM ARBITRARILY AT A DISTANCE OF APP OF APPROACH SLABS.
18. SEE DECK OVERLAY DETAIL ON "SITU TREATMENT AND REQUIREMENTS.

DGN File: IP_PWPcdns1717\4433_C-341-01_SL01.dgn
02-MAY-2005

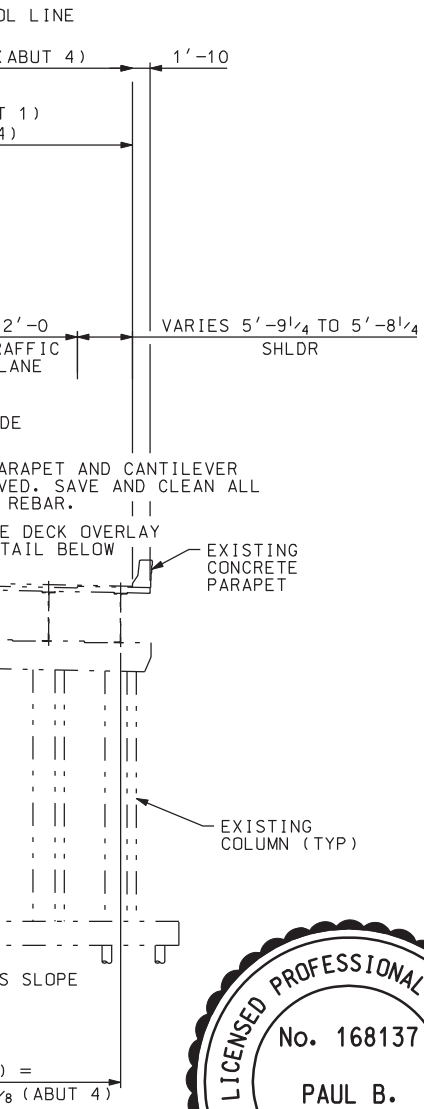


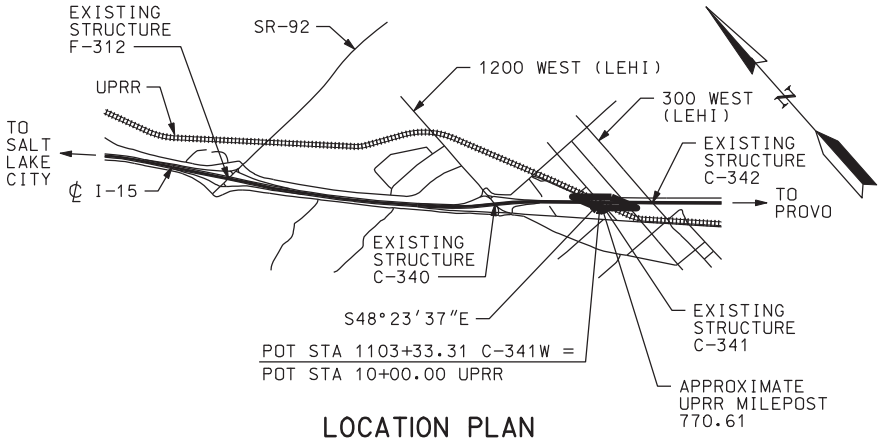


## LOCATION PLAN

## DESIGN DATA

HL-93 LOADING IN ACCORDANCE WITH AASHTO LRFD BRIDGE DESIGN SPECIFICATIONS 3rd EDITION, 2004. SEISMIC DESIGN PER NCHRP 12-49.

INVENTORY AND OPERATING RATINGS FOR HS20-44 ARE IN ACCORDANCE WITH THE AASHTO MANUAL FOR CONDITION EVALUATION OF BRIDGES, 2nd EDITION, AND THE 2001 AND 2003 INTERIM SPECIFICATIONS LOAD FACTOR METHOD. INVENTORY AND OPERATING RATINGS FOR HL-93 ARE IN ACCORDANCE WITH THE GUIDE MANUAL FOR CONDITION EVALUATION AND LOAD RESISTANCE FACTOR RATING (LRFR) OF HIGHWAY BRIDGES.

| | | OPERATING RATING | INVENTORY RATING |
|---|---|---|---|
| EXISTING GIRDERS: | (HS-20) | 2.66 | 1.59 |
| | (HL-93) | 1.42 | 1.10 |
| NEW GIRDERS: | (HL-93) | 1.56 | 1.20 |

CAST-IN-PLACE CONCRETE: f'c = 4000 PSI; fy (REINF) = 60 KSI

STRUCTURAL STEEL: Fy = 36 KSI MIN.

WEARING SURFACE: 5" ASPHALT (NOW) 58 PSF, 0 PSF FWS

DESIGN SPEED: I-15 = 70 M.P.H.

SEISMIC: SEISMIC DESIGN PARAMETERS
(500 YR RETURN PERIOD, 10% PE IN 50 YR)
Ss = MAX CONSIDERED EQ GROUND MOTION
AT 0.2s = 0.48g
S1 = MAX CONSIDERED EQ GROUND MOTION
AT 1.0s = 0.16g
SITE CLASS D
EXISTING STRUCTURE ELEMENTS DO NOT
MEET THE SEISMIC DESIGN CRITERIA.

LICENSED PROFESSIONAL ENGINEER
No. 168137
PAUL B. BLACKHAM
STATE OF UTAH

ANS FOR ADDITIONAL INFORMATION.

VERTICAL DIMENSIONS ARE PLUMB.

THE REQUIREMENTS OUTLINED IN UPRR
E. 106613. COMPLY WITH UPRR GUIDELINES

EET OF TRACK CENTERLINE WHEN A

OVERPASS STRUCTURE ONTO UPRR

EMOLITION OVER RAILROAD TRACKS.
R GUIDELINES.

LEARANCES OF 21' VERTICALLY ABOVE
HORIZONTALLY AT A RIGHT ANGLE FROM

M WHICH ℄ C-341W IS DEFINED ARE SET
PROXIMATELY 100 FEET BEYOND THE END

UATION & LAYOUT 2" SHEET FOR OVERLAY

## INDEX OF SHEETS


1. SITUATION & LAYOUT 1
2. SITUATION & LAYOUT 2
3. SOIL DATA SHEET 1
4. SOIL DATA SHEET 2
5. FOUNDATION PLAN 1
6. FOUNDATION PLAN 2
7. DRIVEN PILE DETAILS
8. ABUTMENT PLAN & ELEVATION 1
9. ABUTMENT DETAILS
10. PEDESTAL RETROFIT DETAILS
11. BENT PLAN & ELEVATION 1
12. BENT PLAN & ELEVATION 2
13. BENT DETAILS
14. BENT FOOTING DETAILS
15. FRAMING PLAN 1
16. FRAMING PLAN 2
17. GIRDER DETAILS 1
18. GIRDER DETAILS 2
19. GIRDER DETAILS 3
20. DIAPHRAGM DETAILS 1
21. DIAPHRAGM DETAILS 2
22. BEARING DETAILS
23. DECK SLAB PLAN 1
24. DECK SLAB PLAN 2
25. DECK SECTIONS 1
26. DECK SECTIONS 2
27. EXPANSION JOINT DETAILS
28. SCREED ELEVATIONS 1
29. SCREED ELEVATIONS 2
30. SCREED ELEVATIONS 3
31. PARAPET DETAILS
32. PARAPET END DETAILS
33. APPROACH SLAB PLAN
34. APPROACH SLAB DETAILS
35. APPROACH SLAB DRAIN DETAILS
36. REINFORCING STEEL SCHEDULE 1
37. REINFORCING STEEL SCHEDULE 2


## QUANTITIES

| ITEM | EST | UNIT | AS CONSTR |
|---|---|---|---|
| PILE DRIVING EQUIPMENT | 1 | LUMP | |
| DRIVEN PILES 12¾ INCH | 4992 | FEET | |
| REINFORCING STEEL - COATED | 195,760 | LB | |
| STRUCTURAL CONCRETE (EST.QTY 831 C.Y.) | 1 | LUMP | |
| PREPARE BRIDGE FOR WIDENING | 1 | LUMP | |
| STRUCTURAL STEEL (EST QTY 517,463 LBS) | 1 | LUMP | |
| EXPANSION JOINT | 221 | FEET | |
| EXPANSION JOINT GLAND REPLACEMENT | 934 | FEET | |
| DYNAMIC PILE TESTING | 6 | EACH | |

| NO. | DATE | BY | REMARKS |
|---|---|---|---|

REVISIONS

UTAH DEPARTMENT OF TRANSPORTATION
SALT LAKE CITY, UTAH
STRUCTURES DIVISION

DESIGN KMR 09/04 CHECK PBB 09/04
DRAWN RDF 09/04 CHECK PBB 09/04
QUANT. PBB 02/05 CHECK JW 02/05

APPROVAL RECOMM. DATE SENIOR DESIGN ENGR.
APPROVED FOR USE BY UDOT DATE UDOT BRIDGE ENGR.

I-15; CORRIDOR IN UTAH COUNTY
I-15 OVER RAILROAD AT LEHI
SITUATION & LAYOUT 1

PROJECT NUMBER SP-15-6(52)241

UTAH
COUNTY

C-341W
DRG. NO.

SHT. 1 OF 37

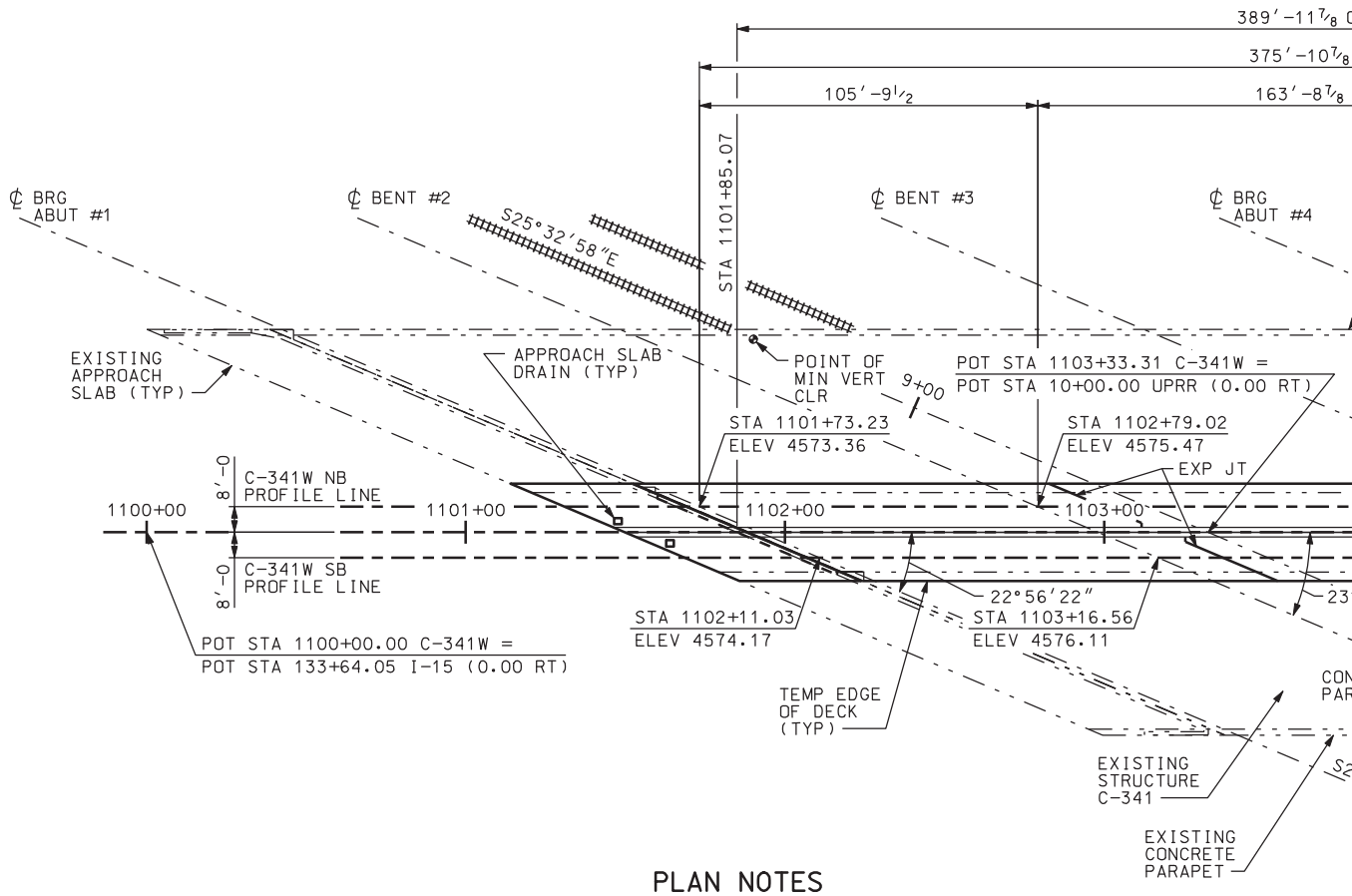


## PLAN NOTES

1. SEE "FOUNDATION PLAN" SHEET FOR UTILITIES LOCATION.

## PLA

## NOTES

1. PARTIALLY REMOVE EXISTING ASPHALT SURFACING OVERLAY. SEE M-91 SHEETS FOR TRANSITION AND REHABILITATION DETAILS.
2. APPLY WATERPROOFING MEMBRANE OVER NEW CONCRETE DECK. PLACE 1" OPEN GRADED SURFACE COURSE AND 2" HMA -1/2 INCH - TOTAL THICKNESS= 3". SEE DECK OVERLAY DETAIL AND M-91 SHEETS.
3. PROFILE GRADE LINE IS TAKEN AT TOP OF NEW CONCRETE DECK.

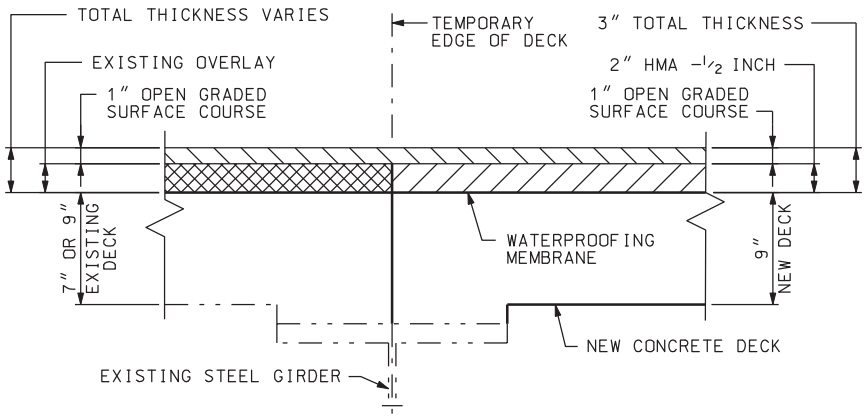


## DECK OVERLAY DETAIL

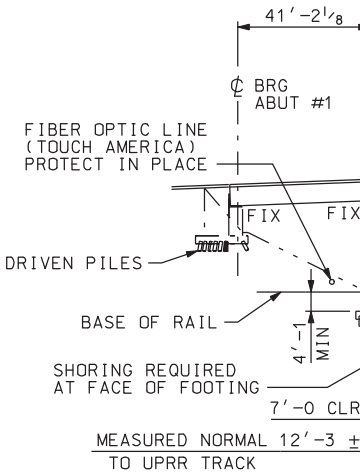


DGN File: IP_PWPcdns1717\4433_C-341-02_SL02.dgn

02-MAY-2005

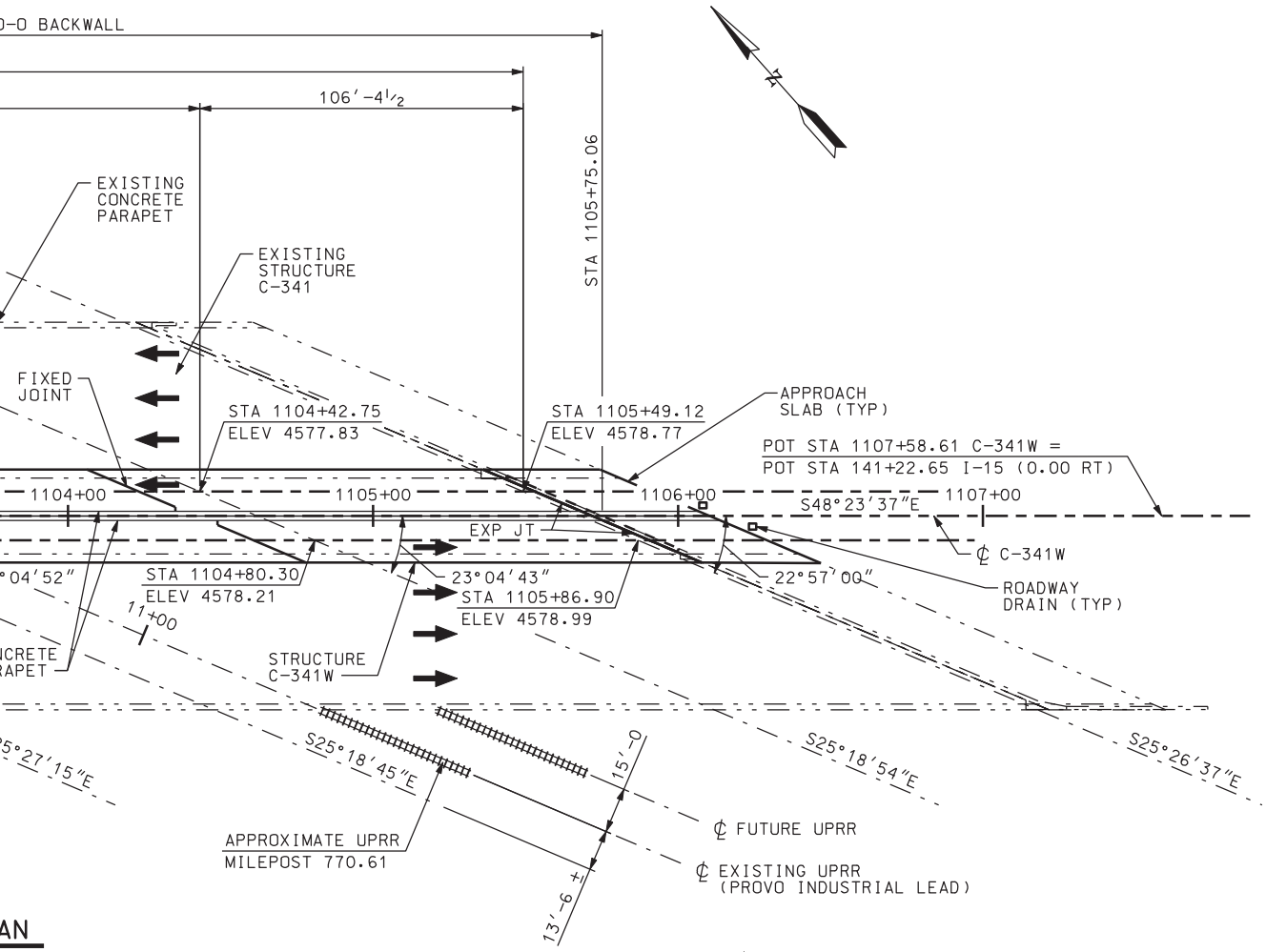


AN

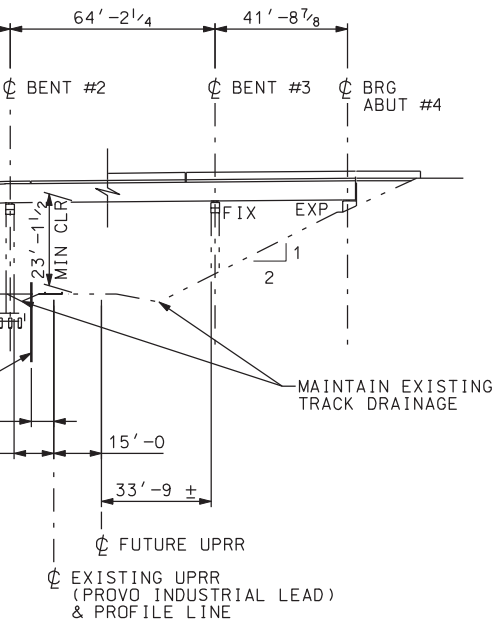


## ELEVATION

NORMAL TO UPRR

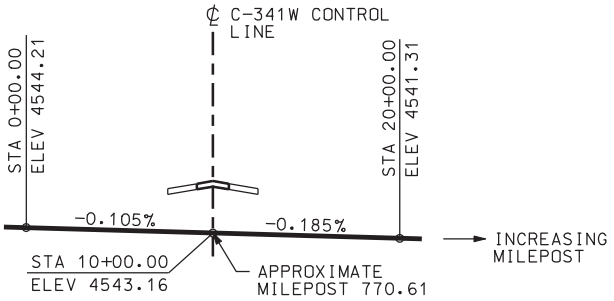


## UPRR PROFILE (EXIST)

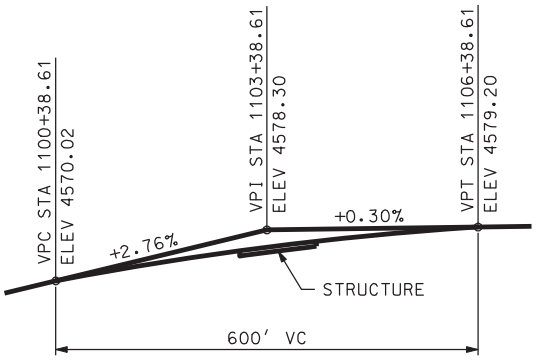


## C-341W PROFILE NB & SB

| NO. | DATE | BY | REMARKS |
|---|---|---|---|
| | | | |

REVISIONS

UTAH DEPARTMENT OF TRANSPORTATION
SALT LAKE CITY, UTAH
STRUCTURES DIVISION

DESIGN KMR 09/04 CHECK PBB 09/04
DRAWN RDF 09/04 CHECK PBB 09/04
QUANT. CHECK

APPROVAL RECOMM. DATE SENIOR DESIGN ENGR.
APPROVED FOR USE BY UDOT DATE UDOT BRIDGE ENGR.

I-15; CORRIDOR IN UTAH COUNTY
I-15 OVER RAILROAD AT LEHI
SITUATION & LAYOUT 2

PROJECT NUMBER SP-15-6(52)241

UTAH
COUNTY

C-341W
DRG. NO.

SHT. 2 OF 37

# DRILL HOLE LOG

## BORING NO. 04-1

Sheet: 1 of 1

PROJECT: I-15, CORRIDOR IN UTAH COUNTY - STRUCTURE C341 PROJECT NO.: 200401.045
CLIENT: UTAH DEPARTMENT OF TRANSPORTATION DATE: 8/19/04 TO 8/20/04
LOCATION: SEE SITE PLAN: N 121162, E 175261 ELEVATION: 4579.9'
DRILLER: B. HARTLEY LOGGED BY: W.S., V.N.B.
EQUIP./DRILL METHOD: CME-55 / N.W. CASING
DEPTH TO WATER - INITIAL: ▽ 17.3' AFTER 12 HOURS: ▽ NOT MEASURED (~37.0')×

| Elev. (Feet) | Depth (Feet) | Lithology | Sample Type | Rec. (In.) | Blows Per 6" & Torvane (tsf) | USCS (AASHTO) | Material Description | | Dry Density, pcf | Moisture Content, % | Atter. Liquid Limit, % | Atter. Plasticity Index, % | Gradation Gravel, % | Gradation Sand, % | Gradation Silt/Clay, % | Other Tests |
|---|---|---|---|---|---|---|---|---|---|---|---|---|---|---|---|---|
| | | | | 9 | 12,9,11 | SM | lt. brown, dry, med. dense | SILTY SAND W/GRAVEL (fill) | | | | | | | | |
| 4575 | 5 | | | 10 | 8,9,11 | SM (A-3) | lt. brown, moist, med. dense | | | 11.1 | | NP | 9 | 69 | 22 | |
| 4570 | 10 | | | 6 | 6,6,6 | SM | lt. brown, moist, med. dense | SILTY SAND (fill) | | | | | | | | |
| 4565 | 15 | | | 9 | 9,12,13 | SM (A-3) | lt. brown, moist, med. dense | | | 14.6 | | NP | 5 | 71 | 24 | |
| | | | | 9 | 5,10,23 | SM | lt. brown, moist, dense | | | | | | | | | |
| 4560 | 20 | | | 8 | 31,47,43 | SM (A-1-b) | lt. brown, moist, very dense | | | 10.2 | | NP | 18 | 61 | 21 | |
| | | | | 7 | 18,33,36 | SM | lt. brown, moist, dense, 3" clayey sand layer | | | | | | | | | |
| 4555 | 25 | | | 8 | 21,30,17 | SM | brown, moist, dense | SILTY SAND W/GRAVEL | | | | | | | | |
| 4550 | 30 | | | 8 | 25,43,52 | SM (A-1-b) | lt. brown, moist, very dense | | | 8.8 | | NP | 34 | 49 | 17 | |
| 4545 | 35 | | | 8 | 19,36,42 | SM | tan, moist, very dense | | | | | | | | | |
| 4540 | 40 | | | 3 | 14,13,12 | GP-GM (A-1-a) | tan, wet, med. dense, coarse grained, clean | POORLY GRADED GRAVEL W/SAND & SILT | | 10.7 | | | 64 | 29 | 7 | |
| 4535 | 45 | | | 13 | 4,7,8 | ML (A-4(8)) | gray, wet, med. dense | SILT | | 27.2 | | NP | 0 | 12 | 88 | |
| 4530 | 50 | | | 12 | Pushed | CL (A-7-5(15) | | CLAY | 92.6 | 33.2 | 48 | 22 | 0 | 0 | 100 | UC |
| | | | | 10 | 14,17,20 | SP-SM | gray, wet, dense | POORLY GRADED SAND W/SILT & GRAVEL | | | | | | | | |
| 4525 | 55 | | | 11 | 16,22,23 | SM | gray, wet, dense | SILTY SAND | | | | | | | | |
| 4520 | 60 | | | 13 | 18,29,30 | SP-SM | gray, wet, very dense | POORLY GRADED SAND W/SILT | | | | | | | | |
| 4515 | 65 | | | 14 | 10,18,17 | SM (A-2-4) | gray, wet, dense | SILTY SAND | | 22.2 | | NP | 0 | 66 | 34 | |
| 4510 | 70 | | | 12 | 12,19,20 | SP-SM | gray, wet, dense | POORLY GRADED SAND W/SILT | | | | | | | | |
| 4505 | 75 | | | 13 | 10,16,22 | SM | gray, wet, dense | | | | | | | | | |

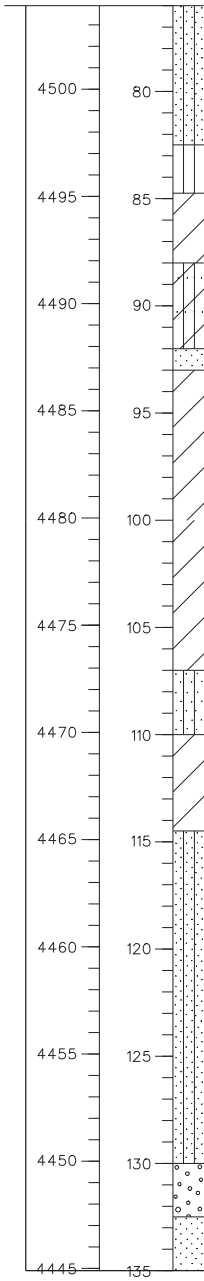


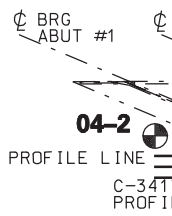


DGN File: IP_PWPadms1717\4433.C-341-03 Soil Data 1.dgn

02-MAY-2005

| | | | | | | | | | | | | | | |
|---|---|---|---|---|---|---|---|---|---|---|---|---|---|---|
| | | | | SILTY SAND | | | | | | | | | | |
| 13 | 10,13,13 | SM (A-2-4) | gray, wet, med. dense, 1" clay layer | | | 26.9 | | NP | 0 | 67 | 33 | | | |
| 18 | 3,5,6 | ML | gray, wet, stiff | SILT | | | | | | | | | | |
| | | | gray | LEAN CLAY | | | | | | | | | | |
| 18 | Pushed 0.65 | CL (A-7-5(12)) | gray, wet, stiff | SILTY CLAY W/SILTY SAND & SILT LAYERS | 102.0 | 25.3 | 41 | 19 | 0 | 4 | 96 | CT UC | | |
| | | | | 12" SAND LAYER | | | | | | | | | | |
| 18 | 3,3,3 0.45 | CL | | | | | | | | | | | | |
| 18 | Pushed 0.50 | CL (A-7-5(14)) | dk. gray to black, moist, stiff | LEAN CLAY | 88.7 | 33.5 | 49 | 24 | 0 | 0 | 100 | CT UC | | |
| 18 | 0,0,5 0.48 | CL | gray, wet, firm | | | | | | | | | | | |
| 8 | 14,18,12 0.10 | ML | gray, wet, very soft | SILT W/SAND | | | | | | | | | | |
| | | | | LEAN CLAY | | | | | | | | | | |
| 18 | Pushed | CL (A-6-8) | gray, wet | | 104.5 | 26.4 | 36 | 14 | 0 | 1 | 99 | UC | | |
| 8 | 4,10,27 | SM SM | gray, wet, dense | | | | | | | | | | | |
| 11 | 12,35,45 | SM | gray, wet, very dense | | | | | | | | | | | |
| | | | | SILTY SAND | | | | | | | | | | |
| 3 | 50/5" | SM | lt. gray, wet, very dense | | | | | | | | | | | |
| 11 | 18,25,28 | SM | lt. gray, wet, very dense | | | | | | | | | | | |
| | | | | GRAVEL | | | | | | | | | | |
| | | | | SAND | | | | | | | | | | |

* Assumed static groundwater depth estimated based on sample moisture conditions.

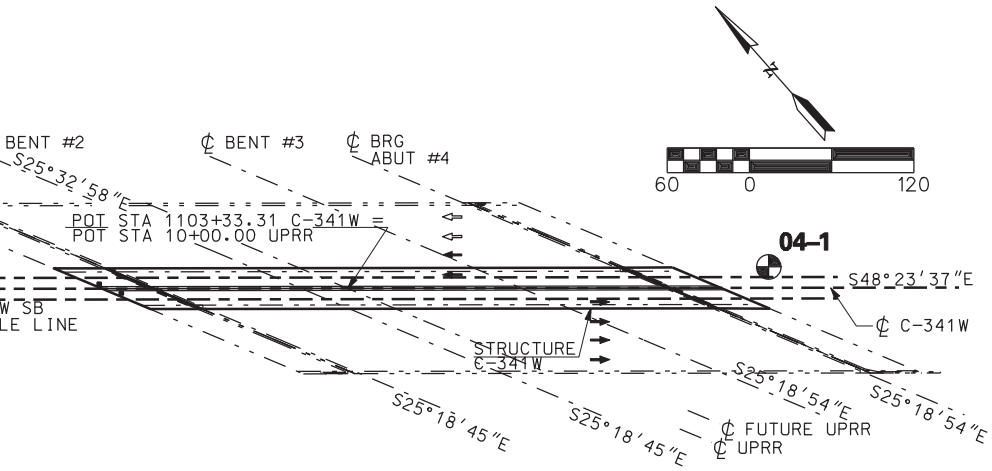


## LOCATION PLAN

# KEY TO BORING LOG

## SYMBOLS

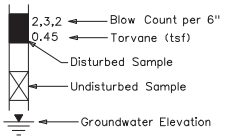


UC = Unconfined Compression Test
CT = Consolidation Test
SG = Specific Gravity Test
DS = Direct Shear Test

## RELATIVE DENSITY (NON-PLASTIC - SAND & SILT)

VERY LOOSE N<4
LOOSE N 4-10
MED DENSE N 10-30
DENSE N 30-50
VERY DENSE N>50

## CONSISTENCY (PLASTIC - SILT & CLAY)

VERY SOFT N<2
SOFT N 2-4
MEDIUM STIFF N 4-8
STIFF N 8-15
VERY STIFF N 15-30
HARD N>30

## GENERAL NOTES

1. THE SUBSURFACE EXPLORATIONS SHOWN WERE CONDUCTED BETWEEN 08-17-04 AND 08-20-04 BY RB&G ENGINEERING, INC..
2. THESE BORING LOGS REPRESENT A SYNOPSIS OF THE SOIL DEPOSITS ENCOUNTERED WITHIN EACH BORING AND ARE BASED ON SOUND GEOLOGICAL AND ENGINEERING JUDGMENT. BECAUSE SOIL IS A COMPLEX MEDIUM, THESE BORING LOGS MAY OR MAY NOT REPRESENT THE SOIL CONDITIONS AT THIS SITE. THIS SUBSURFACE INTERPRETATION IS PRESENTED IN GOOD FAITH AND IS NOT INTENDED AS A SUBSTITUTE FOR PERSONAL INVESTIGATION AND JUDGEMENT OF THE CONTRACTOR.
3. THE WATER LEVELS AND CONDITIONS INDICATED ON THE BORING LOGS REPRESENT HOLE CONDITIONS ON THE DATE SHOWN, HOWEVER, IT SHOULD BE NOTED, THAT AT LOCATIONS AWAY FROM THE BORINGS OR AT ANOTHER TIME THE WATER LEVELS AND CONDITIONS MAY VARY SIGNIFICANTLY.
4. THE STRATIFICATION LINES REPRESENT THE APPROXIMATE BOUNDARIES BETWEEN SOIL TYPES AND THE TRANSITION MAY BE GRADUAL.
5. COBBLE - A ROCK WITH AN AVERAGE DIMENSION BETWEEN 3 INCHES AND 12 INCHES
6. BOULDER - A ROCK WITH AN AVERAGE DIMENSION OF 12 INCHES OR GREATER

NOTE: DRILL RIG USED - CME 55
HAMMER E=0.75

GEOTECHNICAL ENGINEER

| NO. | DATE | BY | REMARKS |
|---|---|---|---|
| | | | |

REVISIONS

UTAH DEPARTMENT OF TRANSPORTATION
SALT LAKE CITY, UTAH
STRUCTURES DIVISION
RB&G ENGINEERING INC.

DESIGN BEP 10/04 CHECK
DRAWN JPN 10/04 CHECK
QUANT. CHECK

APPROVAL RECOMM. DATE SENIOR DESIGN ENGR.
APPROVED FOR USE BY UDOT DATE UDOT BRIDGE ENGR.

I-15; CORRIDOR IN UTAH COUNTY
I-15 OVER RAILROAD AT LEHI
SOIL DATA SHEET 1
PROJECT NUMBER SP-15-6(52)241

UTAH
COUNTY

C-341W
DRG. NO.

SHT. 3 OF 37

# DRILL HOLE LOG

## BORING NO. 04-2

Sheet: 1 of 1

PROJECT: I-15, CORRIDOR IN UTAH COUNTY - STRUCTURE C341 PROJECT NO.: 200401.045
CLIENT: UTAH DEPARTMENT OF TRANSPORTATION DATE: 8/17/04 TO 8/18/04
LOCATION: SEE SITE PLAN: N 121492, E 174889 ELEVATION: 4572.6'
DRILLER: B. HARTLEY, D. HUNT LOGGED BY: M.C., V.N.B.
EQUIP./DRILL METHOD: CME-55 / N.W. CASING
DEPTH TO WATER - INITIAL: ▽ N.M. AFTER 12 HOURS: ▼ 36.8'

| Elev. (Feet) | Depth (Feet) | Lith-ology | Sample Type | Rec. (In.) | Blows Per 6" & Torvane (tsf) | USCS (AASHTO) | Material Description | Dry Density, pcf | Moisture Content, % | Atter. Liquid Limit, % | Atter. Plasticity Index, % | Gradation Gravel, % | Gradation Sand, % | Gradation Silt/Clay, % | Other Tests |
|---|---|---|---|---|---|---|---|---|---|---|---|---|---|---|---|
| 4570 | | | | 13 | 11,9,12 | GM | lt. brown, slightly moist, med. dense | | | | | | | | |
| | 5 | | | 8 | 11,15,16 | GM | lt. brown, moist, med. dense — SILTY GRAVEL W/SAND (fill) | | | | | | | | |
| 4565 | | | | | | | | | | | | | | | |
| | 10 | | | 7 | 5,6,5 | SP-SM | lt. brown, moist, med. dense | | | | | | | | |
| 4560 | | | | 9 | 16,13,18 | SP-SM | lt. brown, moist, dense | | | | | | | | |
| | 15 | | | 10 | 19,26,27 | SP-SM | lt. brown, moist, very dense — POORLY GRADED SAND W/SILT & GRAVEL (fill) | | | | | | | | |
| 4555 | | | | | | | | | | | | | | | |
| | 20 | | | 9 | 19,36,43 | SP-SM | lt. brown, moist, very dense | | | | | | | | |
| 4550 | | | | 7 | 19,26,23 | SP-SM | lt. brown, moist, very dense | | | | | | | | |
| | 25 | | | 5 | 20,26,18 | SP-SM | lt. brown, moist, dense | | | | | | | | |
| 4545 | | | | 6 | 18,16,14 | SM | lt. brown, moist, dense — SILTY SAND | | | | | | | | |
| | 30 | | | | | | | | | | | | | | |
| 4540 | | | | 6 | 10,11,11 | SM | lt. brown, moist, med. dense | | | | | | | | |
| | 35 | | | | | | | | | | | | | | |
| 4535 | | | | 9 | 13,17,15 | SP | lt. gray, moist, dense — POORLY GRADED SAND | | | | | | | | |
| | 40 | | | | | | | | | | | | | | |
| 4530 | | | | 10 | 14,16,23 | SP | lt. gray-brown, wet, dense | | | | | | | | |
| | 45 | | | | | | | | | | | | | | |
| 4525 | | | | 9 | 8,13,17 | SM | lt. brown, wet, med. dense — SILTY SAND; silt layer less than 3" | | | | | | | | |
| | 50 | | | | | | | | | | | | | | |
| 4520 | | | | 13 | 6,10,10 | SM | gray, wet, med. dense — clay layer less than 3"; SILTY SAND W/SAND LAYERS | | | | | | | | |
| | 55 | | | | | | | | | | | | | | |
| 4515 | | | | 13 | 16,25,24 | SM (A-3) | lt. gray, wet, dense — SILTY SAND W/CLAY LAYERS TO 3" THICK & 1" TO 2" APART | | 11.4 | | NP | 5 | 82 | 13 | DS |
| | 60 | | | | | | | | | | | | | | |
| 4510 | | | | 13 | 25,25,25 | SP | gray, wet, very dense | | | | | | | | |
| | 65 | | | | | | | | | | | | | | |
| 4505 | | | | 14 | 13,16,20 | SM | gray, wet, dense — SILTY SAND; clay layer less than 3" | | | | | | | | |
| | 70 | | | | | | | | | | | | | | |
| 4500 | | | | 7 | 7,7,5 | ML | gray, wet, med. dense — SILT W/SAND | | | | | | | | |
| | 75 | | | | | | | | | | | | | | |

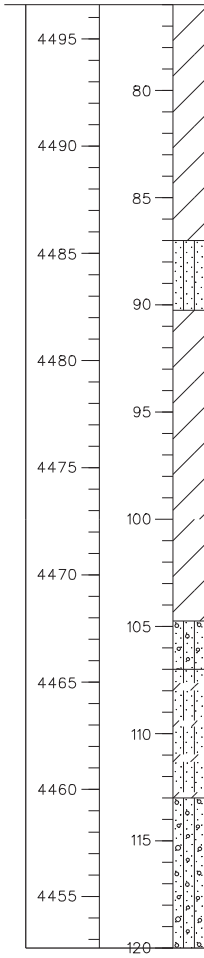


DGN File: IP_PWPcdnsl717\4433_C-341-04 soil data 2.dgn

02-MAY-2005

| | | | | | | | | | | | | | | |
|---|---|---|---|---|---|---|---|---|---|---|---|---|---|---|
| 18 | Pushed 0.15 | CL (A-6(10)) | gray, wet, soft | LEAN CLAY | 94.5 | 30.2 | 39 | 14 | 0 | 3 | 97 | CT UC |
| 18 | 0,0,4 0.10 | CL | gray, wet, very soft | | | | | | | | | |
| | | | | clay layer less than 3" | | | | | | | | |
| 13 | 23,30,30 | SM | gray, wet, very dense | SILTY SAND | | | | | | | | |
| 16 | Pushed | CL (A-6(9)) | gray | | 97.4 | 28.0 | 34 | 13 | 0 | 2 | 98 | CT UC |
| 18 | 1,2,3 0.55 | CL | gray, wet, soft | | | | | | | | | |
| | | | | LEAN CLAY | | | | | | | | |
| 17 | 0,1,2 0.50 | CL | gray, wet, firm | | | | | | | | | |
| 13 | Pushed | CL (A-7-5(11)) | gray, moist, stiff | | 95.2 | 31.9 | 41 | 17 | 0 | 0 | 100 | UC |
| 7 | 5,11,30 | SM | gray, wet, dense | SILTY SAND W/GRAVEL | | | | | | | | |
| 13 | 15,21,24 0.10 | SM/ML | gray, wet, non-plastic | SILTY SAND TO SANDY SILT W/SOME CLAY LAYERS LESS THAN 3" THICK | | | | | | | | |
| 7 | 29,38,41 | SM (A-3) | lt. gray, wet, very dense | | | 15.3 | | NP | 2 | 76 | 22 | DS |
| | | | | SILTY SAND W/GRAVEL | | | | | | | | |
| 12 | 50,62,50 | SM | gray-brown, wet, very dense | | | | | | | | | |

# KEY TO BORING LOG

## SYMBOLS

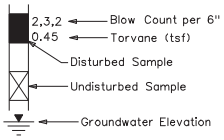


UC = Unconfined Compression Test
CT = Consolidation Test
SG = Specific Gravity Test
DS = Direct Shear Test

## RELATIVE DENSITY (NON-PLASTIC - SAND & SILT)

VERY LOOSE N<4
LOOSE N 4-10
MED DENSE N 10-30
DENSE N 30-50
VERY DENSE N>50

## CONSISTENCY (PLASTIC - SILT & CLAY)

VERY SOFT N<2
SOFT N 2-4
MEDIUM STIFF N 4-8
STIFF N 8-15
VERY STIFF N 15-30
HARD N>30

## GENERAL NOTES

1. THE SUBSURFACE EXPLORATIONS SHOWN WERE CONDUCTED BETWEEN 08-17-04 AND 08-20-04 BY RB&G ENGINEERING, INC..
2. THESE BORING LOGS REPRESENT A SYNOPSIS OF THE SOIL DEPOSITS ENCOUNTERED WITHIN EACH BORING AND ARE BASED ON SOUND GEOLOGICAL AND ENGINEERING JUDGMENT. BECAUSE SOIL IS A COMPLEX MEDIUM, THESE BORING LOGS MAY OR MAY NOT REPRESENT THE SOIL CONDITIONS AT THIS SITE. THIS SUBSURFACE INTERPRETATION IS PRESENTED IN GOOD FAITH AND IS NOT INTENDED AS A SUBSTITUTE FOR PERSONAL INVESTIGATION AND JUDGEMENT OF THE CONTRACTOR.
3. THE WATER LEVELS AND CONDITIONS INDICATED ON THE BORING LOGS REPRESENT HOLE CONDITIONS ON THE DATE SHOWN, HOWEVER, IT SHOULD BE NOTED, THAT AT LOCATIONS AWAY FROM THE BORINGS OR AT ANOTHER TIME THE WATER LEVELS AND CONDITIONS MAY VARY SIGNIFICANTLY.
4. THE STRATIFICATION LINES REPRESENT THE APPROXIMATE BOUNDARIES BETWEEN SOIL TYPES AND THE TRANSITION MAY BE GRADUAL.
5. COBBLE - A ROCK WITH AN AVERAGE DIMENSION BETWEEN 3 INCHES AND 12 INCHES
6. BOULDER - A ROCK WITH AN AVERAGE DIMENSION OF 12 INCHES OR GREATER

NOTE: DRILL RIG USED - CME 55
HAMMER E=0.75

GEOTECHNICAL ENGINEER

| NO. | DATE | BY | REMARKS |
|---|---|---|---|
| | | | |

REVISIONS

UTAH DEPARTMENT OF TRANSPORTATION
SALT LAKE CITY, UTAH
STRUCTURES DIVISION

RB&G ENGINEERING INC.

DESIGN BEP 10/04 CHECK
DRAWN JPN 10/04 CHECK
QUANT. CHECK

APPROVAL RECOMM. DATE SENIOR DESIGN ENGR.
APPROVED FOR USE BY UDOT DATE UDOT BRIDGE ENGR.

I-15; CORRIDOR IN UTAH COUNTY
I-15 OVER RAILROAD AT LEHI
SOIL DATA SHEET 2
PROJECT NUMBER SP-15-6(52)241

UTAH
COUNTY

C-341W
DRG. NO.

SHT. 4 OF 37

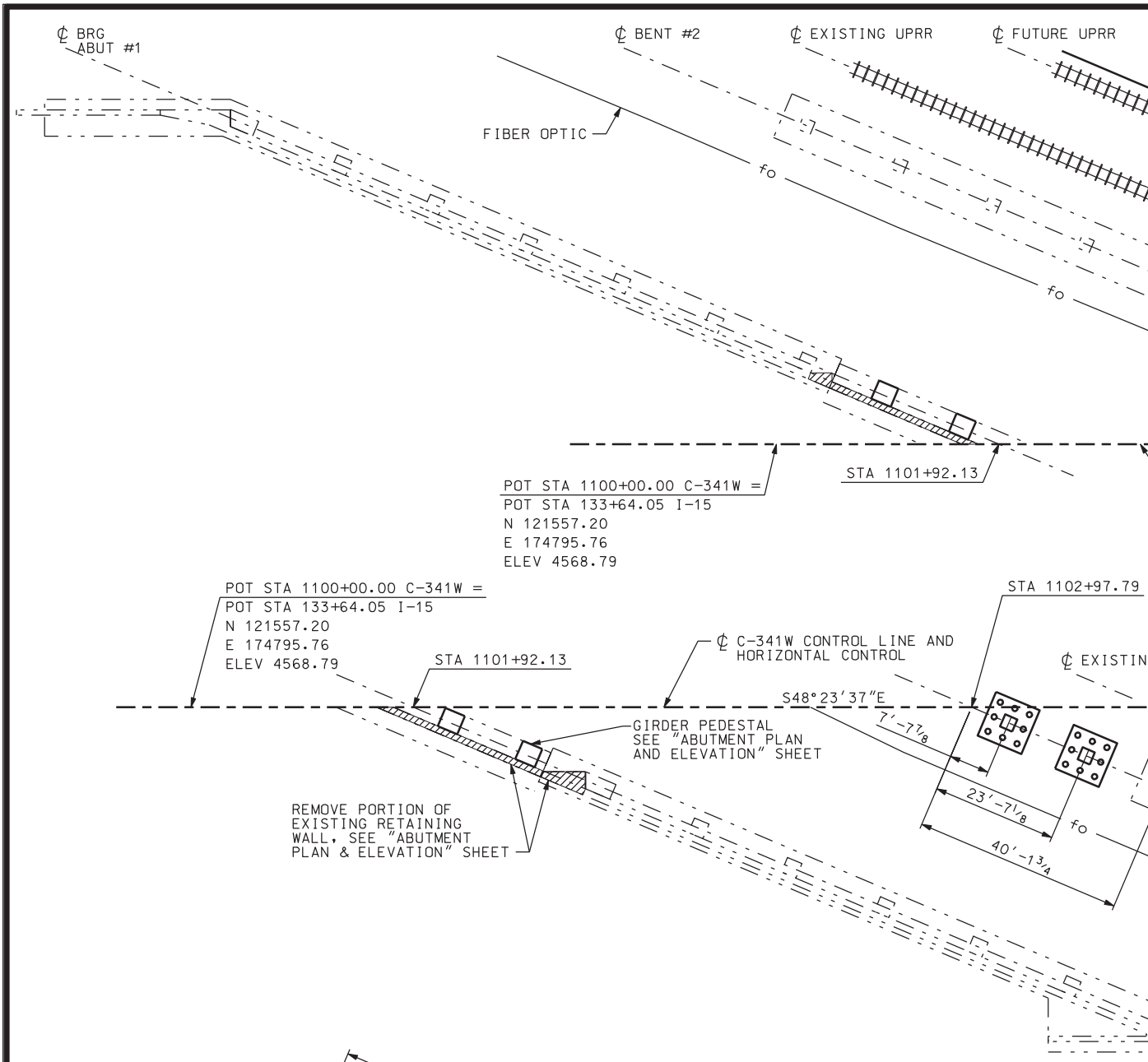


FOUNDATI

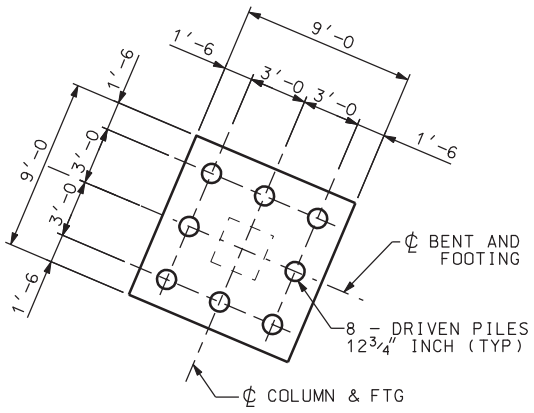


## PILE LAYOUT FOR BENTS #2 & #3

## DETAIL

8 LOCATIONS

DGN File:IP_PWPcdms1717\4433_C-341-05_FOUN01.dgn
02-MAY-2005

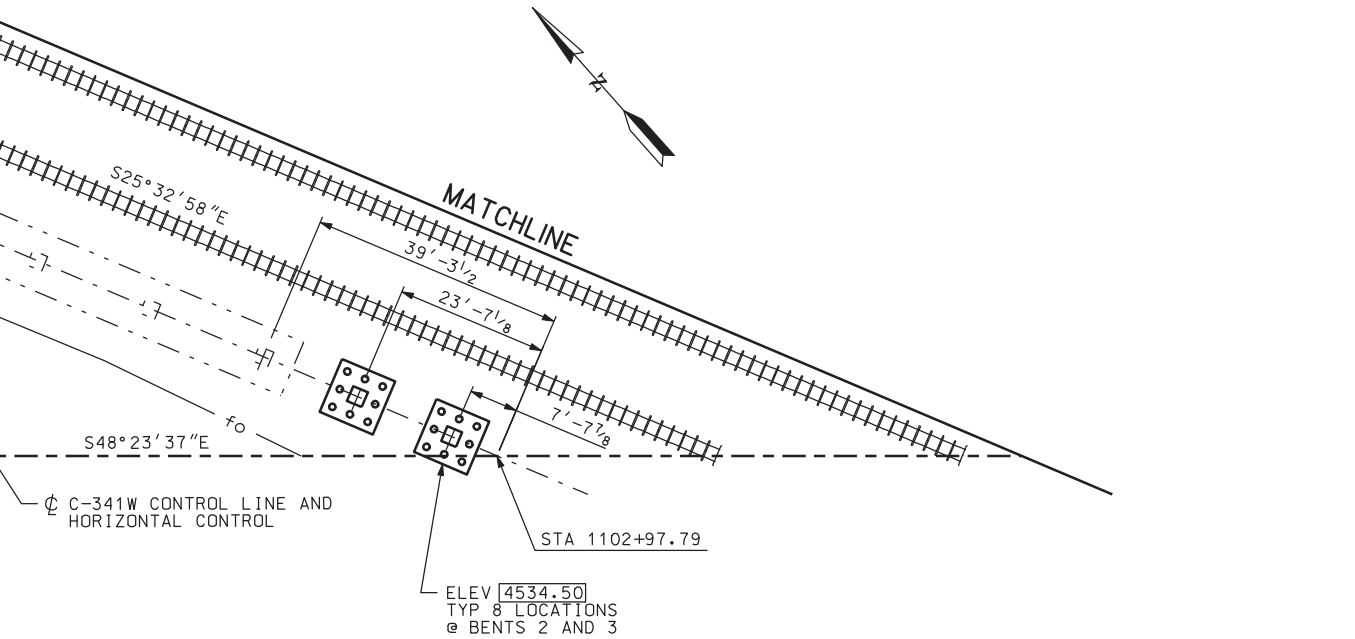


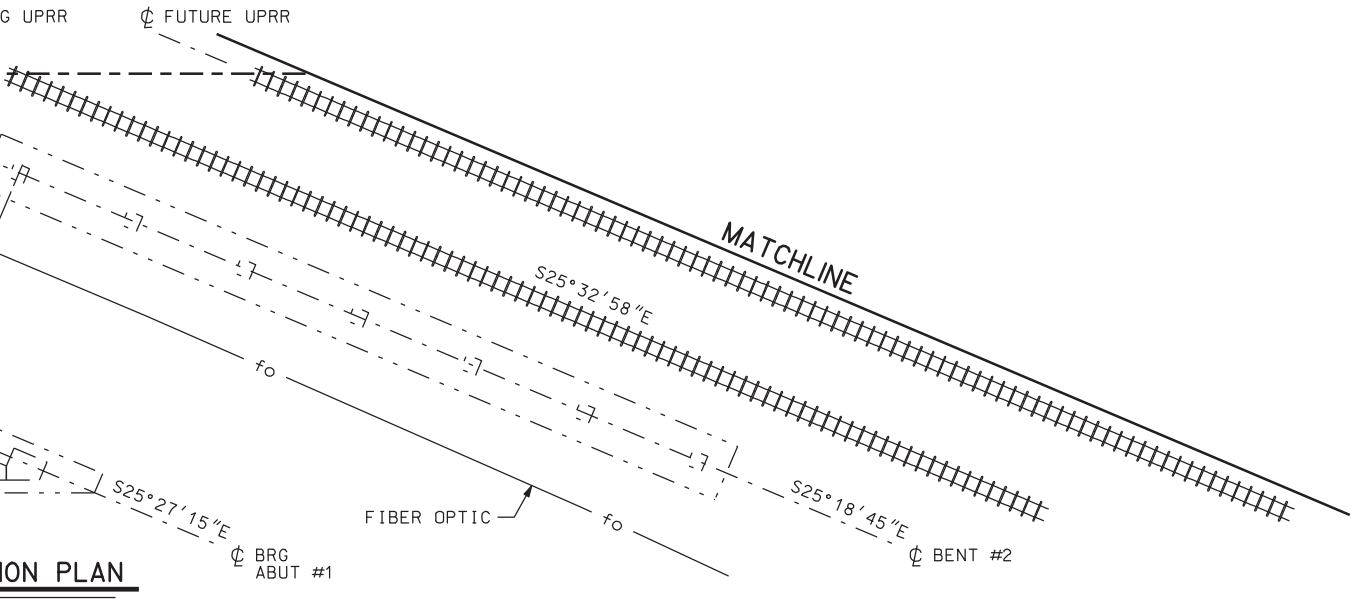


ION PLAN

## NOTES

1. ELEVATIONS AT THE BOTTOM OF FOOTING ARE SHOWN ENCLOSED IN RECTANGLES E.G. 4501.00 .
2. SEE "DRIVEN PILE DETAILS" SHEET FOR PILE DETAILS.
3. LOCATE ℄ NEW COLUMNS ON THE "BEST FIT" LINE BETWEEN EXISTING COLUMNS.
4. ALIGN FRONT FACE OF ABUTMENT WALL ON THE "BEST FIT" LINE BETWEEN FRONT FACES OF THE EXISTING ABUTMENT WALLS.
5. PROVIDE SOIL COVER OF MINIMUM 2'-0 FOR ALL FOOTINGS.
6. FIELD VERIFY NORTHING AND EASTING OF ALL CONTROL POINTS AS WELL AS THE RELATIVE ELEVATION DIFFERENCES BETWEEN ALL CONTROL POINTS. IF THE NORTHING, EASTING OR RELATIVE ELEVATION DIFFERENCES VARY BY MORE THAN ± 1" FROM WHAT IS GIVEN ON THIS SHEET, REPORT DISCREPANCIES TO THE ENGINEER AND STOP ALL CONSTRUCTION UNTIL DISCREPANCIES ARE RESOLVED.
7. SEE "FOUNDATION PLAN 2" FOR LOCATION OF CONTROL POINTS.
8. SEE UT 3 FOR UTILITIES DATA NOT SHOWN.

| NO. | DATE | BY | REMARKS |
|---|---|---|---|
| | | | |

REVISIONS

UTAH DEPARTMENT OF TRANSPORTATION
SALT LAKE CITY, UTAH
STRUCTURES DIVISION

DESIGN KMR 09/04 CHECK PBB 09/04
DRAWN RDF 09/04 CHECK PBB 09/04
QUANT. CHECK

APPROVAL RECOMM. DATE SENIOR DESIGN ENGR.
APPROVED FOR USE BY UDOT DATE UDOT BRIDGE ENGR.

I-15; CORRIDOR IN UTAH COUNTY
I-15 OVER RAILROAD AT LEHI
FOUNDATION PLAN 1
PROJECT NUMBER SP-15-6(52)241

UTAH
COUNTY

C-341W
DRG. NO.

SHT. 5 OF 37

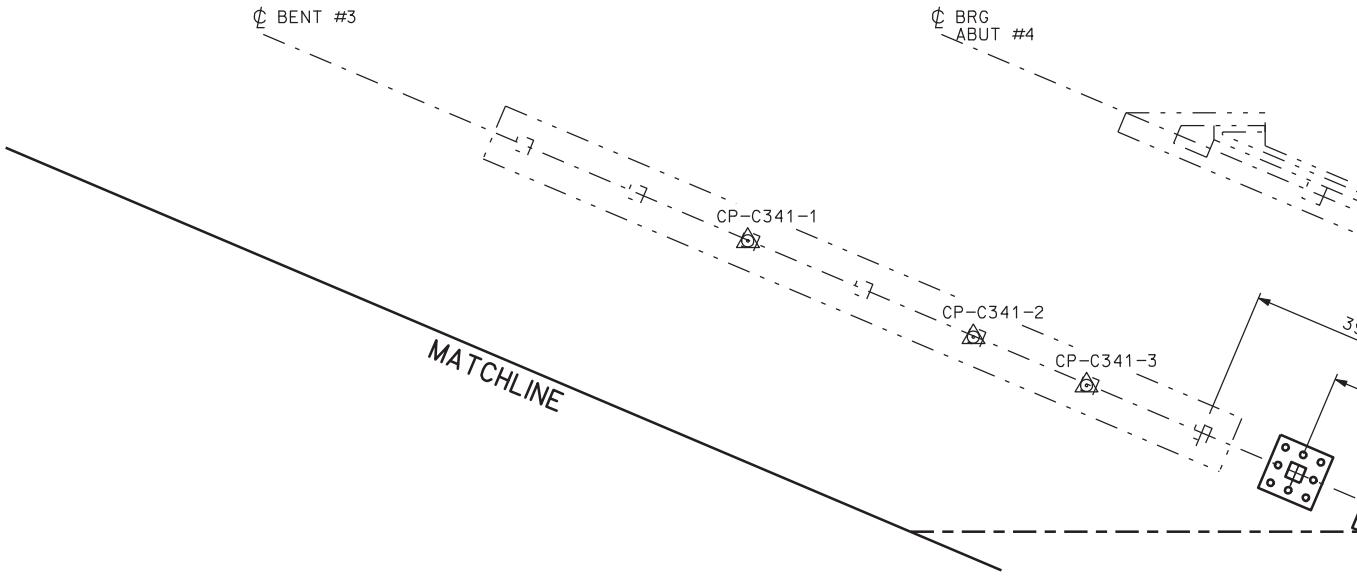


STA 1104+61.5

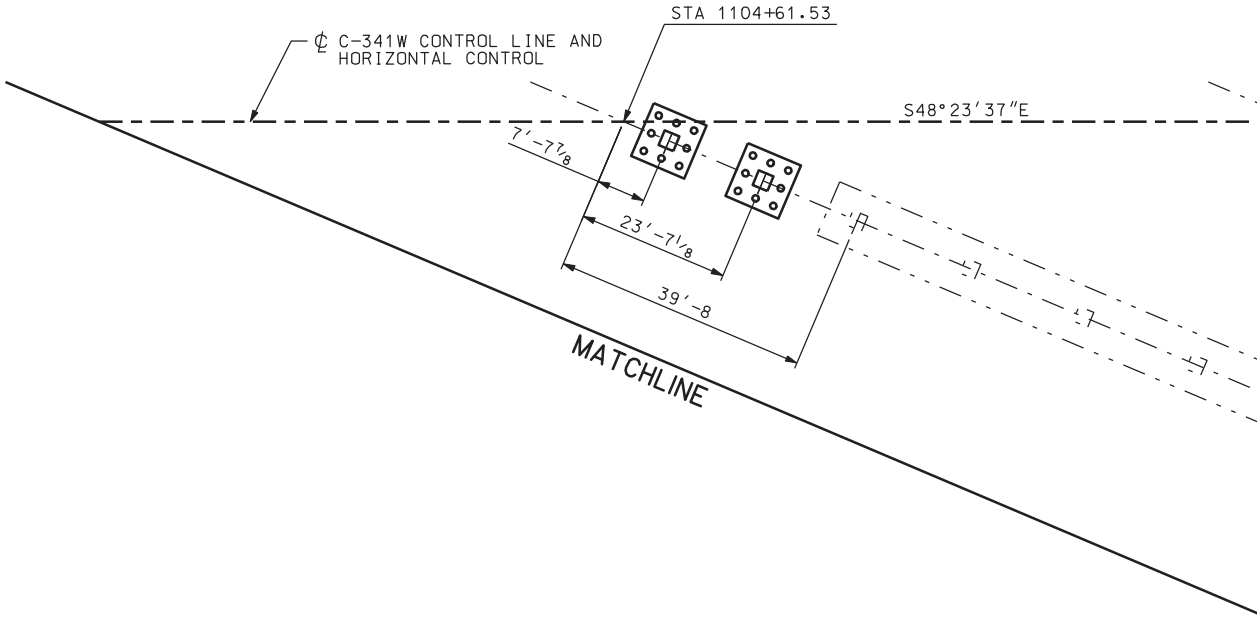


FOUNDATI

DGN File:IP_PWPcdnsl717\4433_C-341-06_FOUN02.dgn

02-MAY-2005

| CONTROL POINT DATA | | | |
|---|---|---|---|
| POINTS | NORTHING | EASTING | ELEV |
| CP-C341-1 | 121355.9864 | 175090.9144 | 4548.8573 |
| CP-C341-2 | 121321.3684 | 175107.3452 | 4548.8792 |
| CP-C341-3 | 121303.9742 | 175115.5515 | 4549.0366 |

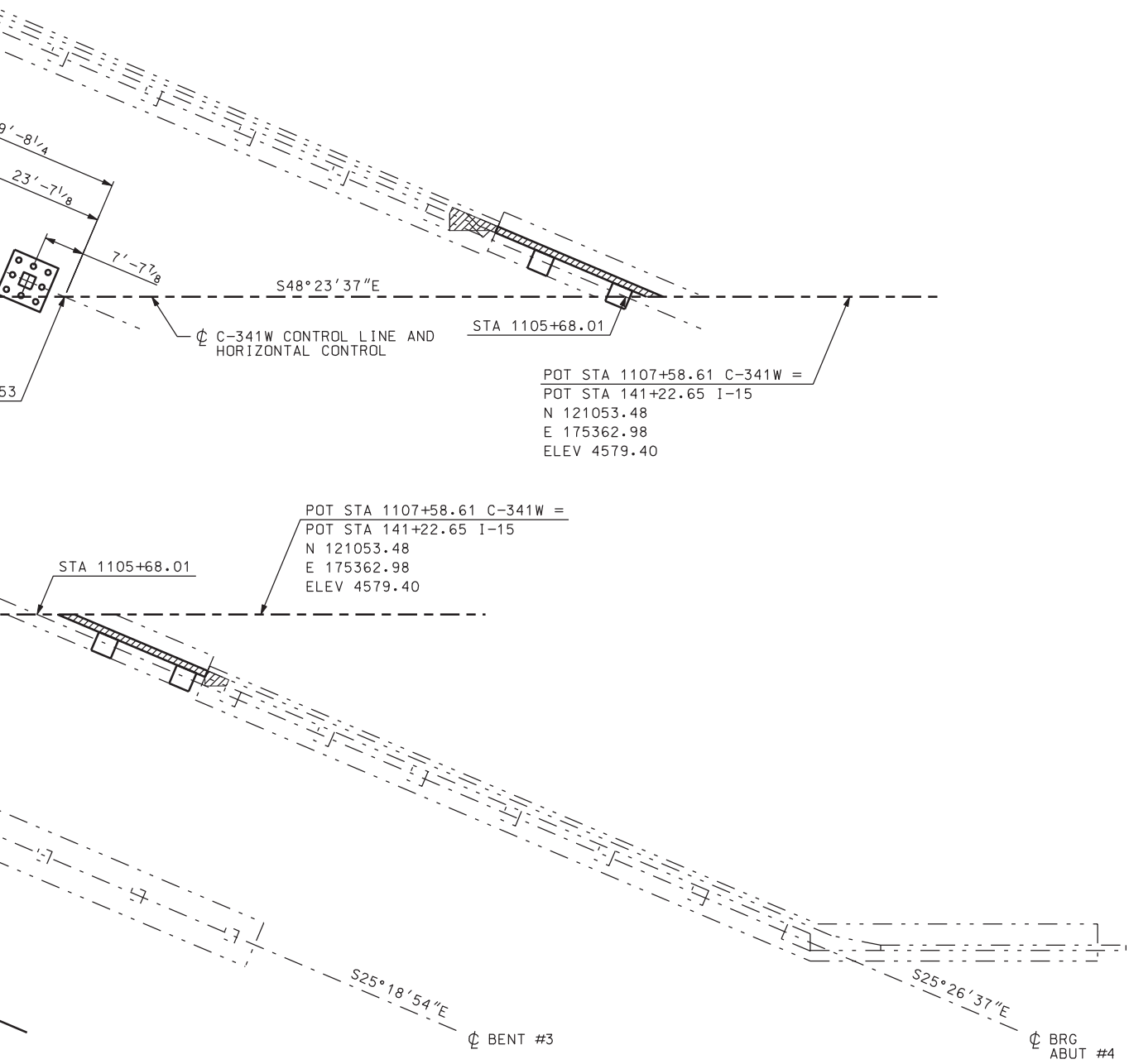


ION PLAN

| NO. | DATE | BY | REMARKS |
|---|---|---|---|
| | | | |

REVISIONS

UTAH DEPARTMENT OF TRANSPORTATION
SALT LAKE CITY, UTAH
STRUCTURES DIVISION

DESIGN KMR 09/04 CHECK PBB 09/04
DRAWN RDF 09/04 CHECK PBB 09/04
QUANT. CHECK

APPROVAL RECOMM. DATE SENIOR DESIGN ENGR.
APPROVED FOR USE BY UDOT DATE UDOT BRIDGE ENGR.

I-15; CORRIDOR IN UTAH COUNTY
I-15 OVER RAILROAD AT LEHI
FOUNDATION PLAN 2

PROJECT NUMBER SP-15-6(52)241

UTAH
COUNTY

C-341W
DRG. NO.

SHT. 6 OF 37

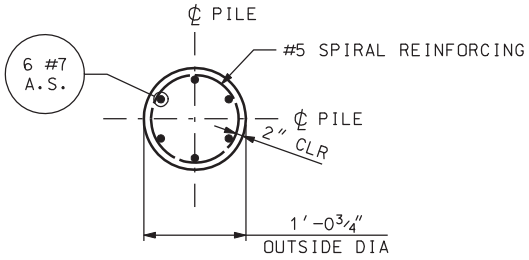


## SECTION A-A

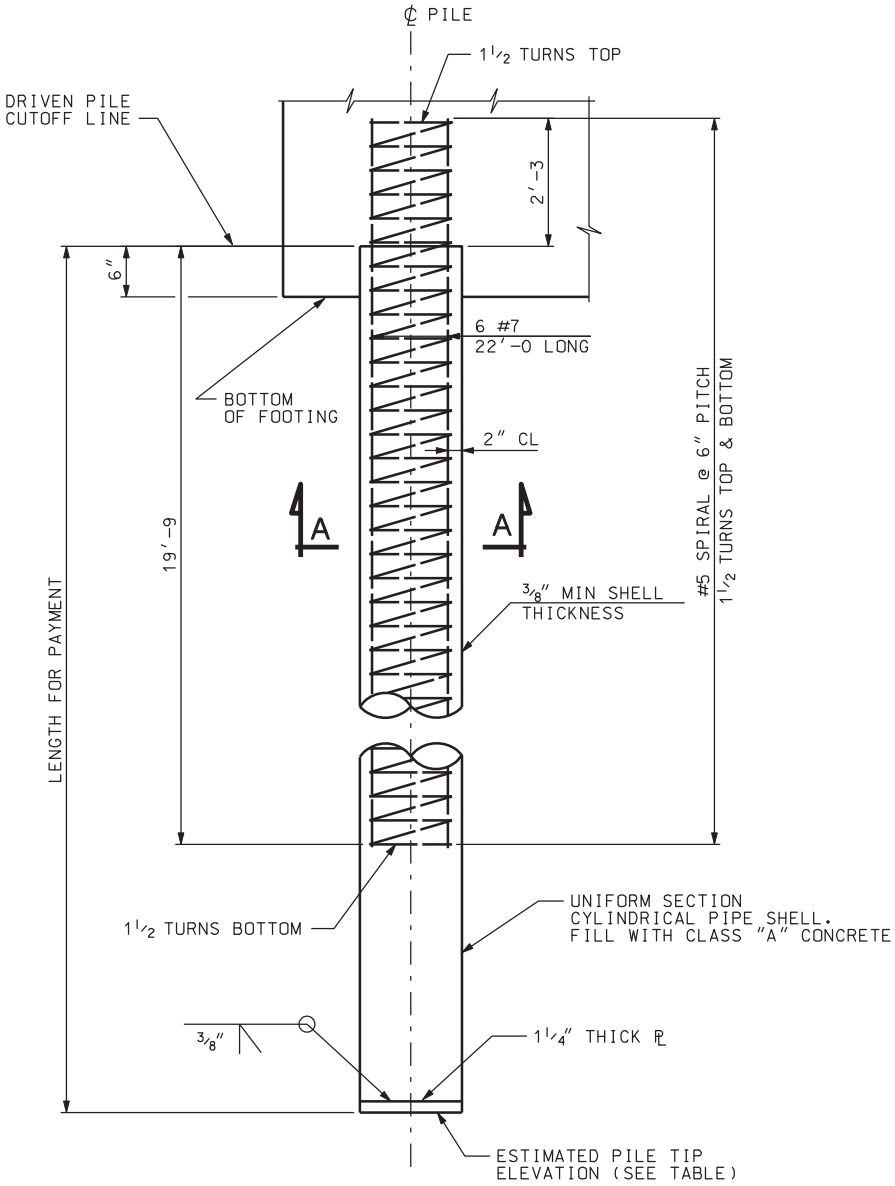


## ELEVATION

| PIL | | | |
|---|---|---|---|
| LOCATION | ESTIMATED PILE TIP ELEV (FEET) | ELEV OF MIN ACCEPTABLE PILE PENETRATION (FEET) | |
| BENT #2 | 4456.50 | 4460.0 | |
| BENT #3 | 4457.50 | 4461.0 | |

NOTE: SERVICE I PILE RESISTANCE WAS DETER

DGN File:IP_PWPcdns1717\4433_C-341-07_PILE01.dgn
02-MAY-2005

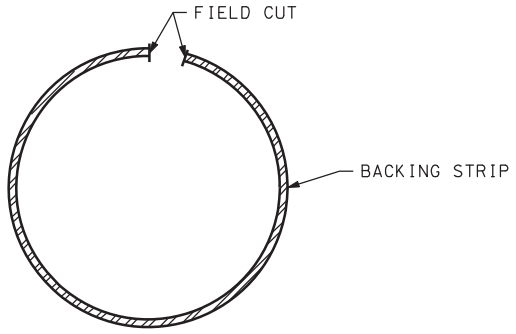


## NOTE

FIELD CUT PIECE OF PILE SO WHEN COMPRESSED IT WILL SLIDE INSIDE PILE SECTIONS.

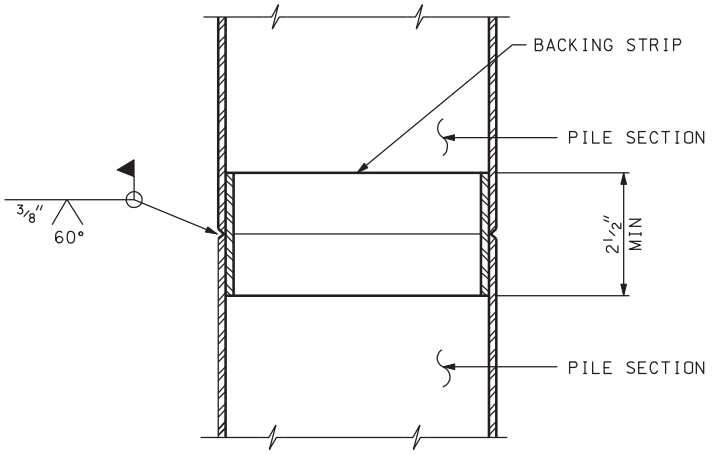


## SPLICE DETAIL

USE FULL STRENGTH WELDED SPLICES.

## NOTES

1. FILL PILE SHELLS WITH CLASS "A" CONCRETE.
2. HOLD REINFORCING STEEL ADEQUATELY IN FINAL POSITION DURING PLACEMENT OF CONCRETE AROUND BARS.
3. USE PILES MEETING ASTM A252 GRADE 3 WITH A MINIMUM YIELD STRENGTH OF 45 KSI.
4. PILE TIP ELEVATIONS ARE APPROXIMATE. VERIFY THESE ELEVATIONS AT THE TIME OF CONSTRUCTION IN ACCORDANCE WITH THE SPECIFICATIONS.
5. USE UNCOATED REINFORCEMENT FOR PILE EMBEDDED REINFORCEMENT.
6. USE A PILE HAMMER WITH A MINIMUM RATED ENERGY OF 35 KIP-FT.

E DATA

| SERVICE I PILE RESISTANCE (Kips) | STRENGTH I PILE RESISTANCE (Kips) | REQUIRED DRIVING RESISTANCE (Kips) | AS CONST. PILE TIP ELEV (FEET) |
|---|---|---|---|
| 205 | 166 | 338 | |
| 205 | 182 | 348 | |

MINED ASSUMING TOLERABLE SETTLEMENT OF 1 INCH.

| NO. | DATE | BY | REMARKS |
|---|---|---|---|

REVISIONS

UTAH DEPARTMENT OF TRANSPORTATION
SALT LAKE CITY, UTAH
STRUCTURES DIVISION

DESIGN PBB 12/04 CHECK KMR 12/04
DRAWN RDF 12/04 CHECK KMR 12/04
QUANT. PBB 12/04 CHECK KMR 12/04

APPROVAL RECOMM. DATE SENIOR DESIGN ENGR.
APPROVED FOR USE BY UDOT DATE UDOT BRIDGE ENGR.

I-15; CORRIDOR IN UTAH COUNTY
I-15 OVER RAILROAD AT LEHI
DRIVEN PILE DETAILS
PROJECT NUMBER SP-15-6(52)241

UTAH
COUNTY

C-341W
DRG. NO.

SHT. 7 OF 37

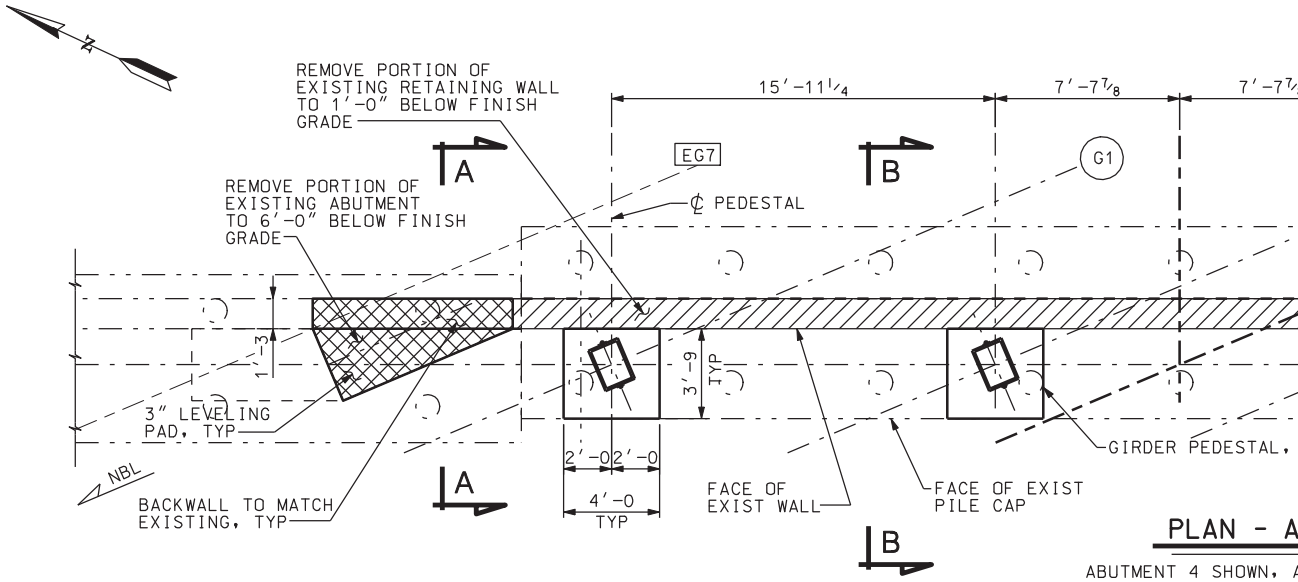


PLAN - A

ABUTMENT 4 SHOWN, A

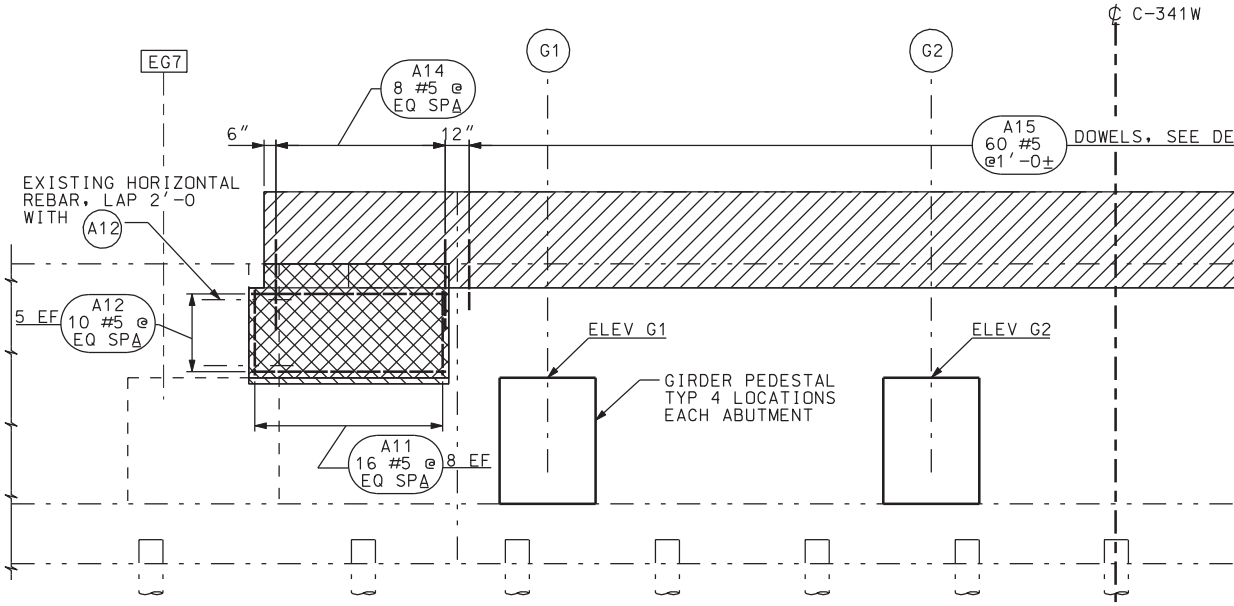


ELEVATION - A

| ELEVATION SCHEDULE (SEE NOTE 3) | | | | |
|---|---|---|---|---|
| | ELEV G1 | ELEV G2 | ELEV G3 | ELEV G4 |
| ABUT #1 | 4566.86 | 4567.11 | 4567.41 | 4567.79 |
| ABUT #4 | 4572.31 | 4572.33 | 4572.41 | 4572.56 |

DGN File:IP_PWPcdms1717\4433_C-341-08_ABUT01.dgn
02-MAY-2005

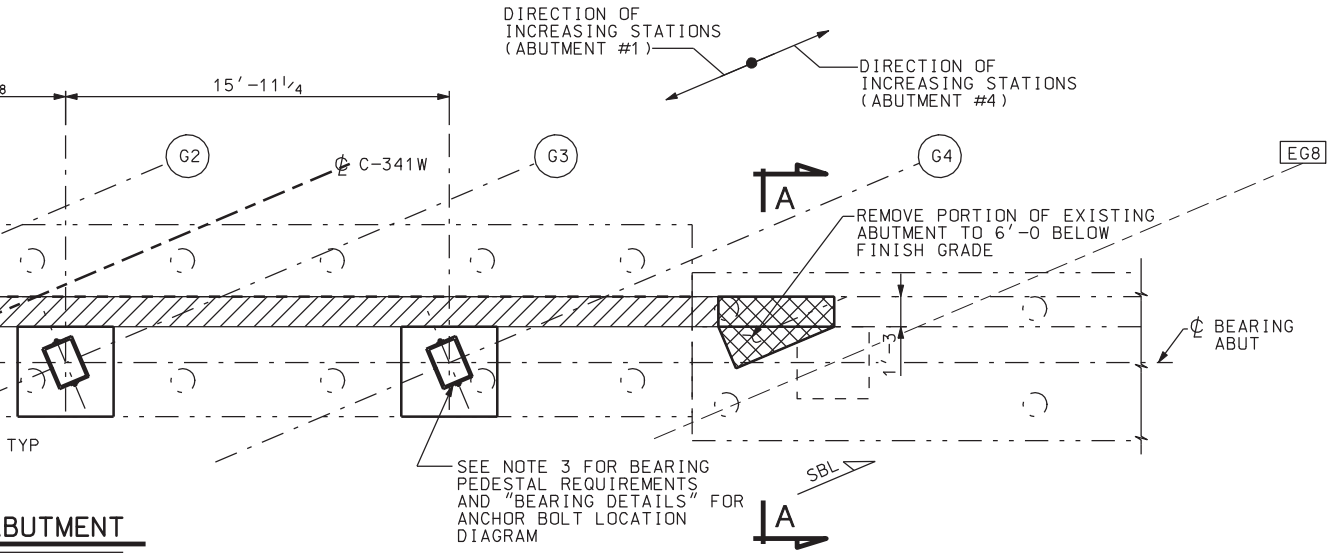


BUTMENT

ABUTMENT 1 SIMILAR.

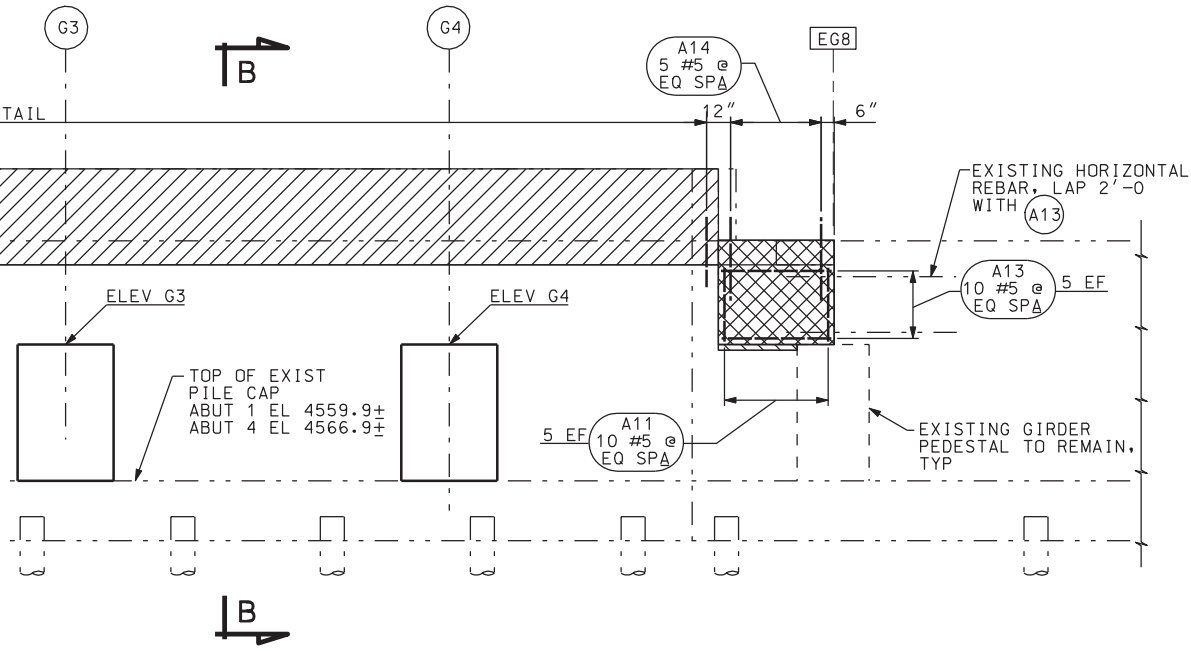


BUTMENT

## NOTES

1. FOR SECTIONS AND DETAILS AND GIRDER PEDESTAL REINFORCING, SEE "ABUTMENT DETAILS" SHEET.
2. FOR BEARING AND ANCHOR BOLT DETAILS, SEE "BEARING DETAILS".
3. PROVIDE BEARING PEDESTAL 1'-10 x 1'-4 AT EACH BEARING LOCATION. FINISH THE CONCRETE HIGH. RUB OR GRIND THE PEDESTAL SMOOTH AND LEVEL TO THE SPECIFIED ELEVATION.
4. THE COST OF CONCRETE REMOVAL IS INCIDENTAL TO THE COST OF "PREPARE BRIDGE FOR WIDENING" BID ITEM. SEE THE SPECIAL PROVISIONS FOR "PREPARE BRIDGE WIDENING".

| QUANTITIES STRUCTURAL CONCRETE | |
|---|---|
| ABUTMENT 1 & 4 GIRDER PEDESTALS (8 TOTAL) | 30.6 CY |

| NO. | DATE | BY | REMARKS |
|---|---|---|---|
| | | | |

REVISIONS

UTAH DEPARTMENT OF TRANSPORTATION
SALT LAKE CITY, UTAH
STRUCTURES DIVISION

DESIGN KTF 11/04 CHECK KMR 12/04
DRAWN BLP 11/04 CHECK KMR 12/04
QUANT. KTF 12/04 CHECK KMR 12/04

APPROVAL RECOMM. DATE SENIOR DESIGN ENGR.
APPROVED FOR USE BY UDOT DATE UDOT BRIDGE ENGR.

I-15; CORRIDOR IN UTAH COUNTY
I-15 OVER RAILROAD AT LEHI
ABUTMENT PLAN & ELEVATION

PROJECT NUMBER SP-15-6(52)241

UTAH COUNTY

C-341W DRG. NO.

SHT. 8 OF 37

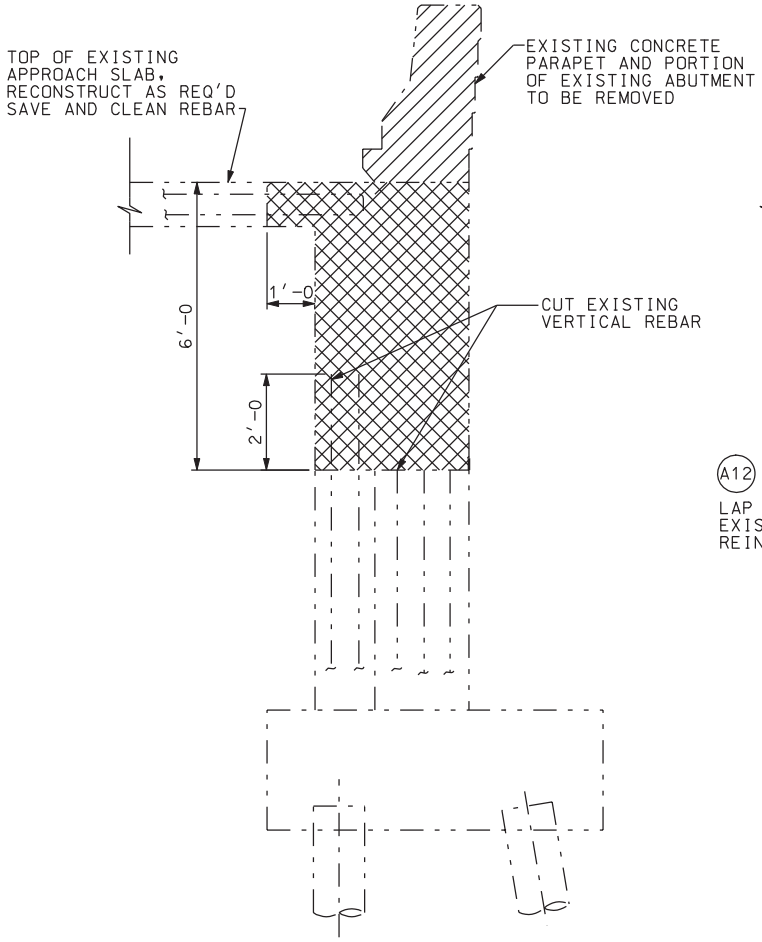


REMOVAL DETAIL

SECTION A-A

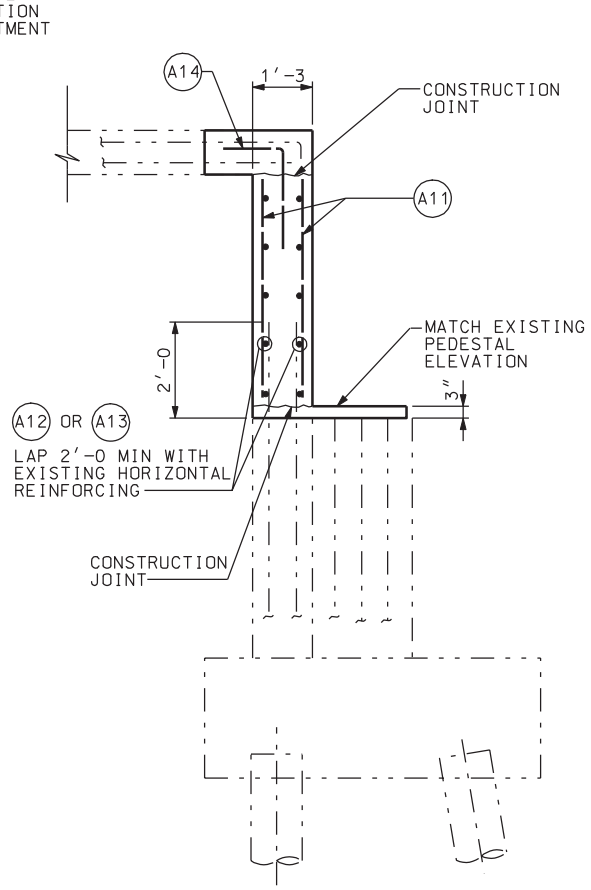


RECONSTRUCT BACKWALL DETAIL

SECTION A-A

## EPOXY ANCHORAGE NOTE

USE APPROVED EPOXY ANCHORAGE TO DEVELOP A MINIMUM PULLOUT STRENGTH OF 18.6 KIPS. 11 INCHES EMBEDMENT IS ASSUMED IN SIZING THE REINFORCEMENT. DRILLING AND PREPARATION FOR ANCHORAGE OF REINFORCEMENT AND CONCRETE REMOVAL ARE INCIDENTAL TO THE COST FOR THE BID ITEM "PREPARE BRIDGE FOR WIDENING".

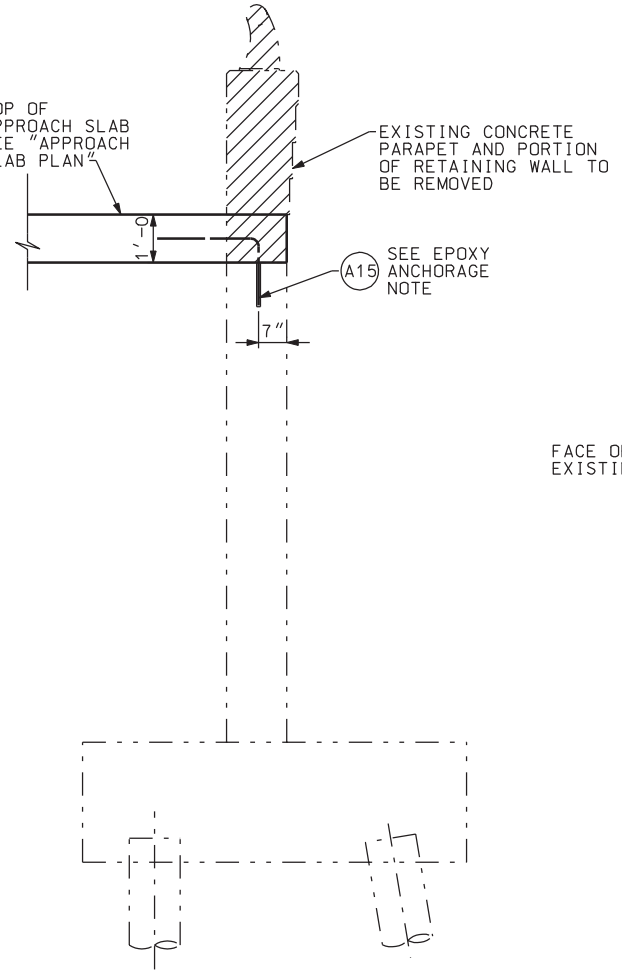


SECTION B-B

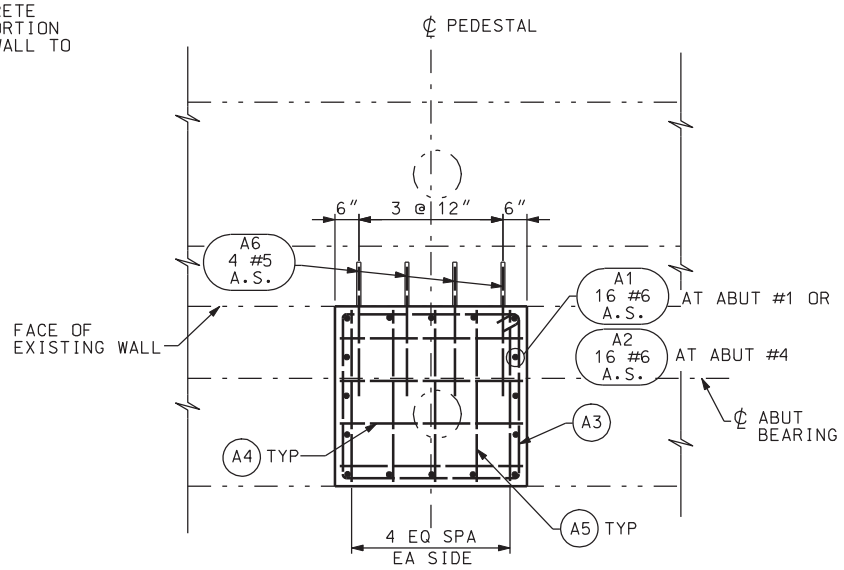


PEDESTAL PLAN

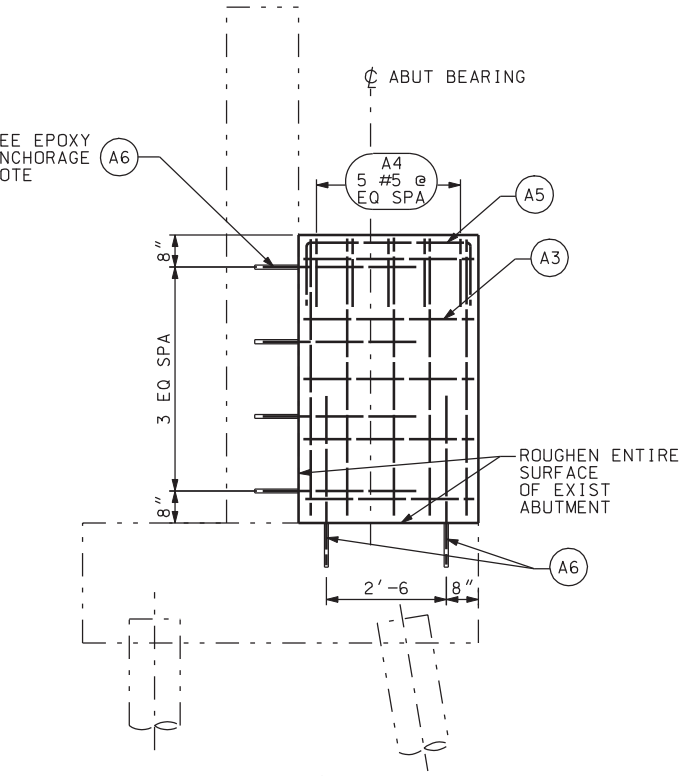


SECTION C-C

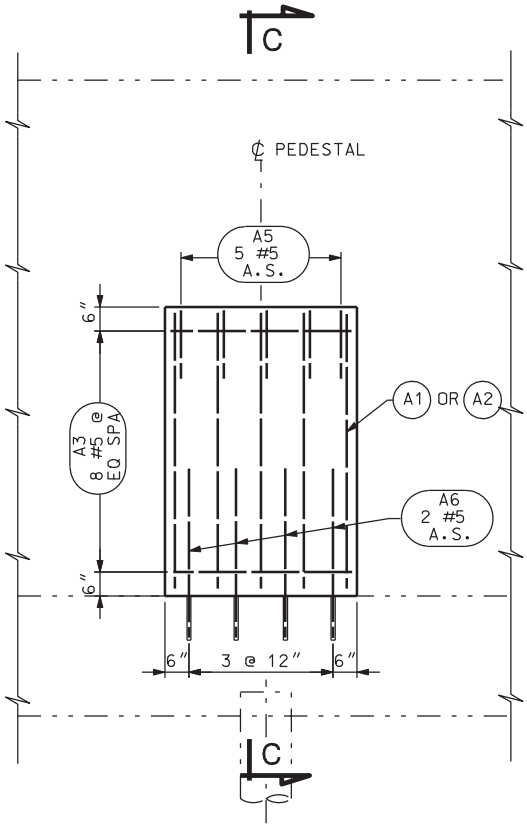


PEDESTAL ELEVATION

| NO. | DATE | BY | REMARKS |
|---|---|---|---|
| | | | |

REVISIONS

UTAH DEPARTMENT OF TRANSPORTATION
SALT LAKE CITY, UTAH
STRUCTURES DIVISION

DESIGN KTF 12/04 CHECK KMR 12/04
DRAWN BLP 12/04 CHECK KMR 12/04
QUANT. KTF 10/04 CHECK JW 11/04

APPROVAL RECOMM. DATE SENIOR DESIGN ENGR.
APPROVED FOR USE BY UDOT DATE UDOT BRIDGE ENGR.

I-15; CORRIDOR IN UTAH COUNTY
I-15 OVER RAILROAD AT LEHI
ABUTMENT DETAILS

PROJECT NUMBER SP-15-6(52)241

UTAH
COUNTY

C-341W
DRG. NO.

SHT. 9 OF 37

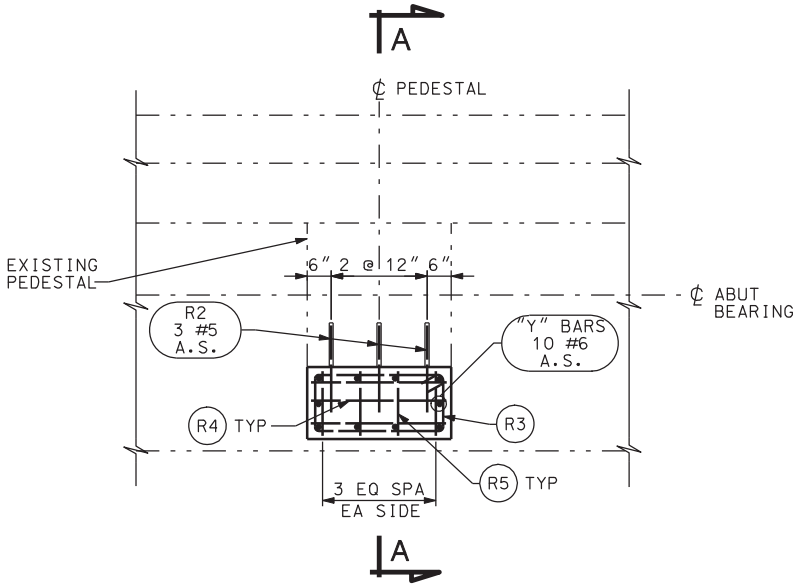


## PEDESTAL RETROFIT PLAN

28 PEDESTAL RETROFITS TOTAL

## EPOXY

USE APPROVED EPOXY
A MINIMUM PULLOUT S
EMBEDMENT IS ASSUME

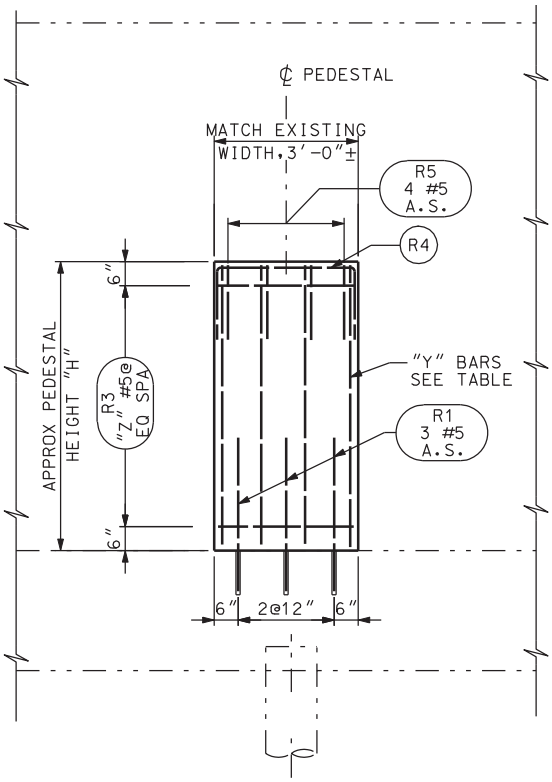


## PEDESTAL RETROFIT ELEVATION

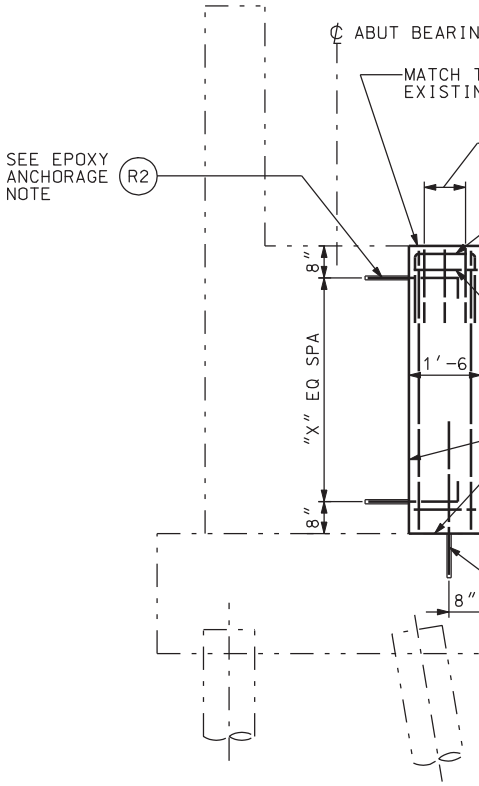


## SECTION A-A

DGN File:IP_PWPcdms1717\4433_C-341-10_PEDRET.dgn

02-MAY-2005

## ANCHORAGE NOTE

ANCHORAGE TO DEVELOP
TRENGTH OF 18.6 KIPS. 11 INCHES
D IN SIZING THE REINFORCEMENT.

G

TOP OF
NG PEDESTAL

R4
3 #5 @
EQ SPA

R5

R3

ROUGHEN ENTIRE
PEDESTAL
RETROFIT
CONTACT SURFACE

R1

## PEDESTAL RETROFIT SCHEDULE

| EXISTING GIRDER | ABUTMENT 1 | | | | ABUTMENT 4 | | | |
|---|---|---|---|---|---|---|---|---|
| | H(FT) | "X" | "Y"BAR | "Z" | H(FT) | "X" | "Y"BAR | "Z" |
| EG1 | 3.01 | 1 | R6 | 2 | 3.30 | 1 | R6 | 2 |
| EG2 | 3.63 | 1 | R6 | 2 | 3.66 | 1 | R6 | 2 |
| EG3 | 4.25 | 2 | R7 | 3 | 4.00 | 2 | R7 | 3 |
| EG4 | 4.86 | 2 | R7 | 3 | 4.33 | 2 | R7 | 3 |
| EG5 | 5.45 | 3 | R8 | 5 | 4.65 | 2 | R7 | 3 |
| EG6 | 6.02 | 3 | R8 | 5 | 4.96 | 2 | R7 | 3 |
| EG7 | 6.59 | 3 | R9 | 5 | 5.25 | 3 | R8 | 4 |
| EG8 | 8.14 | 4 | R10 | 8 | 5.68 | 3 | R8 | 4 |
| EG9 | 8.33 | 4 | R10 | 8 | 5.59 | 3 | R8 | 4 |
| EG10 | 8.50 | 4 | R10 | 8 | 5.49 | 3 | R8 | 4 |
| EG11 | 8.67 | 4 | R10 | 8 | 5.39 | 3 | R8 | 4 |
| EG12 | 8.81 | 4 | R10 | 8 | 5.29 | 3 | R8 | 4 |
| EG13 | 8.95 | 4 | R10 | 8 | 5.18 | 3 | R8 | 4 |
| EG14 | 9.07 | 4 | R10 | 8 | 5.08 | 3 | R8 | 4 |

| QUANTITIES STRUCTURAL CONCRETE | |
|---|---|
| PEDESTAL RETROFIT 28 TOTAL | 27.0 CY |

| NO. | DATE | BY | REMARKS |
|---|---|---|---|
| | | | |

REVISIONS

UTAH DEPARTMENT OF TRANSPORTATION
SALT LAKE CITY, UTAH
STRUCTURES DIVISION

DESIGN KTF 01/05 CHECK PBB 01/05
DRAWN BLP 01/05 CHECK PBB 01/05
QUANT. KTF 01/05 CHECK PBB 01/05

APPROVAL RECOMM. DATE SENIOR DESIGN ENGR.
APPROVED FOR USE BY UDOT DATE UDOT BRIDGE ENGR.

I-15; CORRIDOR IN UTAH COUNTY
I-15 OVER RAILROAD AT LEHI
PEDESTAL RETROFIT DETAILS

PROJECT NUMBER SP-15-6(52)241

UTAH
COUNTY

C-341W
DRG. NO.

SHT. 10 OF 37

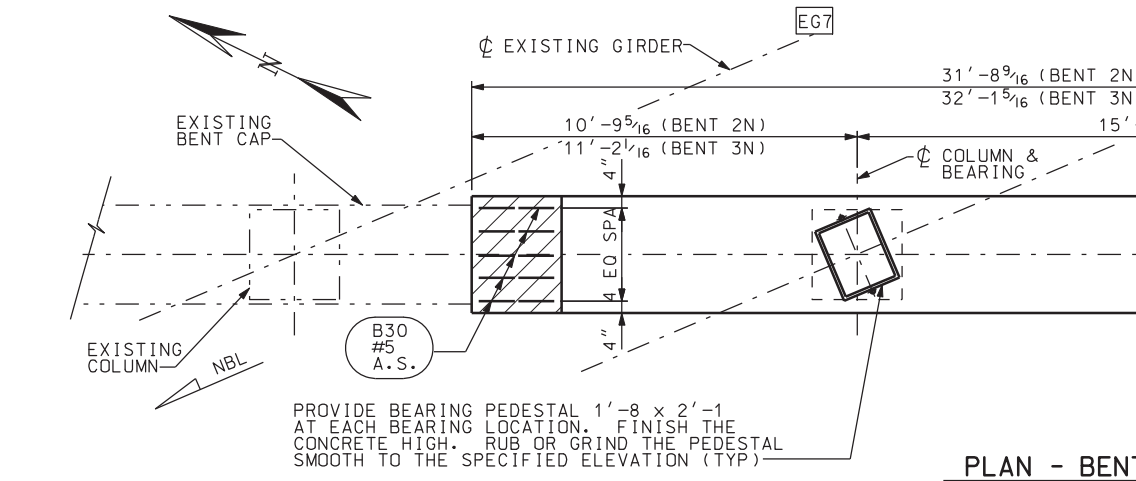


PLAN - BENT

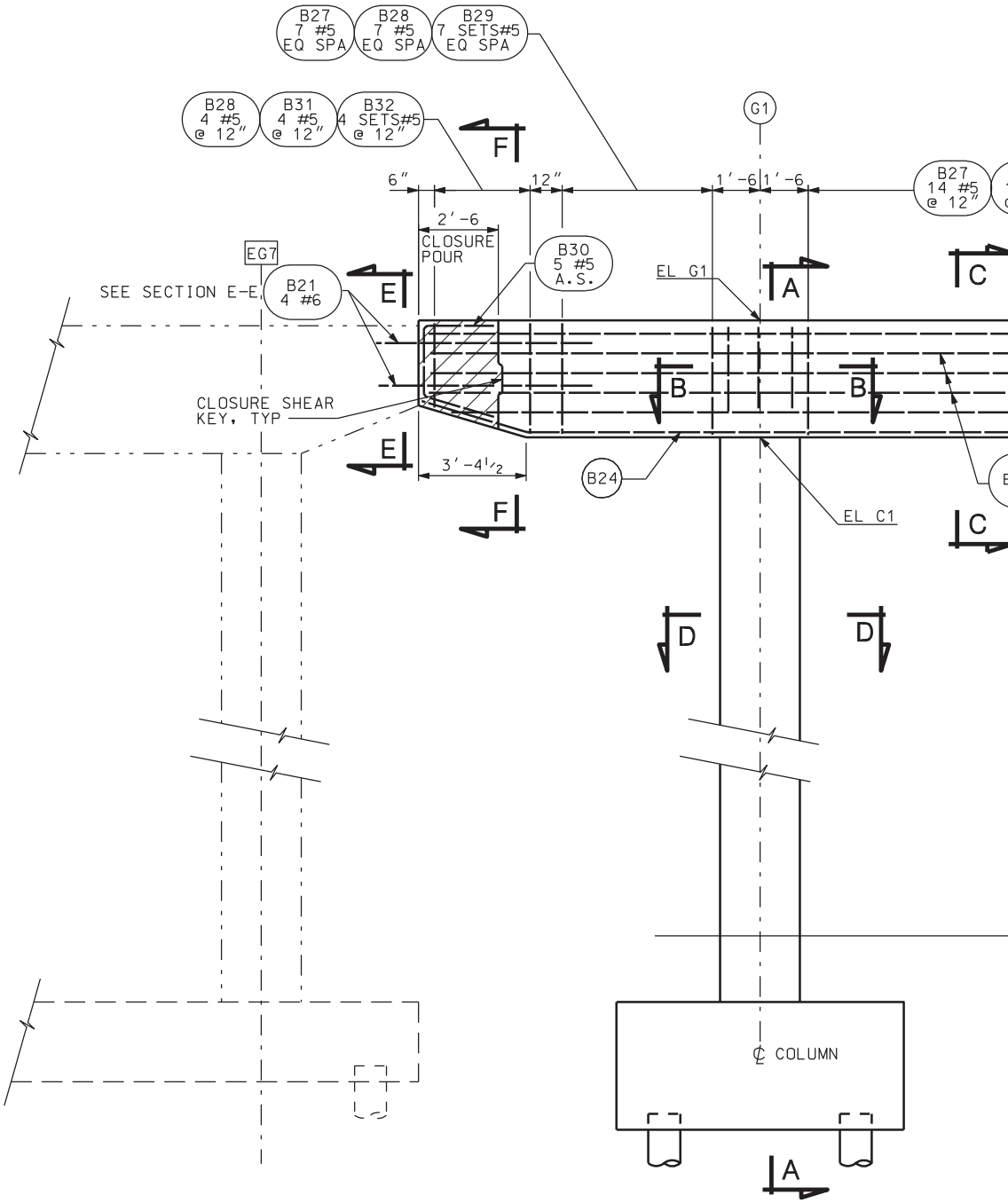


ELEVATION - BEN

DGN File:IP_PWPcdms1717\4433_C-341-11_BENT01.dgn

02-MAY-2005

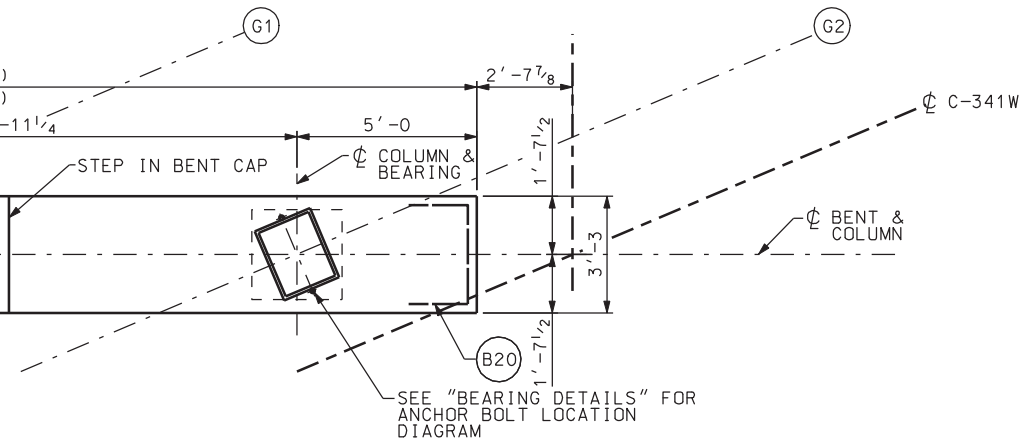


TS 2N AND 3N

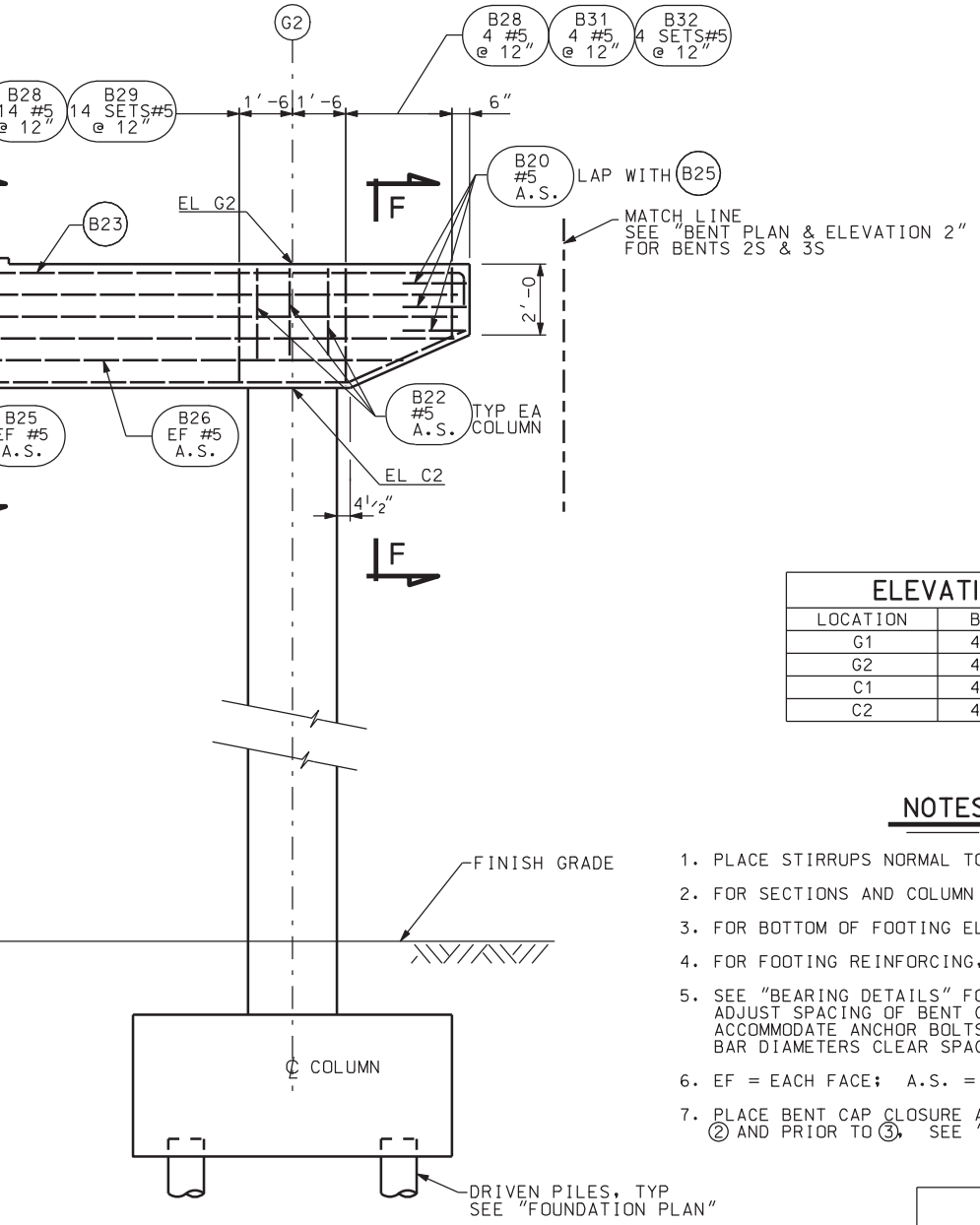


NTS 2N AND 3N

| ELEVATION SCHEDULE | | |
|---|---|---|
| LOCATION | BENT 2N | BENT 3N |
| G1 | 4568.87 | 4571.25 |
| G2 | 4569.05 | 4571.33 |
| C1 | 4565.37 | 4567.75 |
| C2 | 4565.55 | 4567.83 |

## NOTES

1. PLACE STIRRUPS NORMAL TO ℄ BENT.
2. FOR SECTIONS AND COLUMN REINFORCING, SEE "BENT DETAILS".
3. FOR BOTTOM OF FOOTING ELEVATIONS, SEE "FOUNDATION PLAN".
4. FOR FOOTING REINFORCING, SEE "BENT FOOTING DETAILS".
5. SEE "BEARING DETAILS" FOR BEARING AND ANCHOR BOLT DETAIL. ADJUST SPACING OF BENT CAP REINFORCING UP TO 4" TO ACCOMMODATE ANCHOR BOLTS. MAINTAIN AT LEAST TWO BAR DIAMETERS CLEAR SPACING BETWEEN BARS.
6. EF = EACH FACE; A.S. = AS SHOWN.
7. PLACE BENT CAP CLOSURE AFTER DECK SLAB POUR SEQUENCE ② AND PRIOR TO ③. SEE "DECK SLAB PLAN".

| QUANTITIES<br>STRUCTURAL CONCRETE | | |
|---|---|---|
| LOCATION | BENT 2N | BENT 3N |
| BENT CAP | 13.3 CY | 13.4 CY |
| COLUMN | 12.5 CY | 13.6 CY |
| TOTAL | 25.8 CY | 27.0 CY |

| NO. | DATE | BY | REMARKS |
|---|---|---|---|
| | | | |

REVISIONS

UTAH DEPARTMENT OF TRANSPORTATION
SALT LAKE CITY, UTAH
STRUCTURES DIVISION

DESIGN KTF 10/04 CHECK HE 11/04
DRAWN BLP 10/04 CHECK JW 11/04
QUANT. KTF 10/04 CHECK JW 11/04

APPROVAL RECOMM. DATE SENIOR DESIGN ENGR.
APPROVED FOR USE BY UDOT DATE UDOT BRIDGE ENGR.

I-15; CORRIDOR IN UTAH COUNTY
I-15 OVER RAILROAD AT LEHI
BENT PLAN AND ELEVATION 1
PROJECT NUMBER SP-15-6(52)241

UTAH
COUNTY

C-341W
DRG. NO.

SHT. 11 OF 37

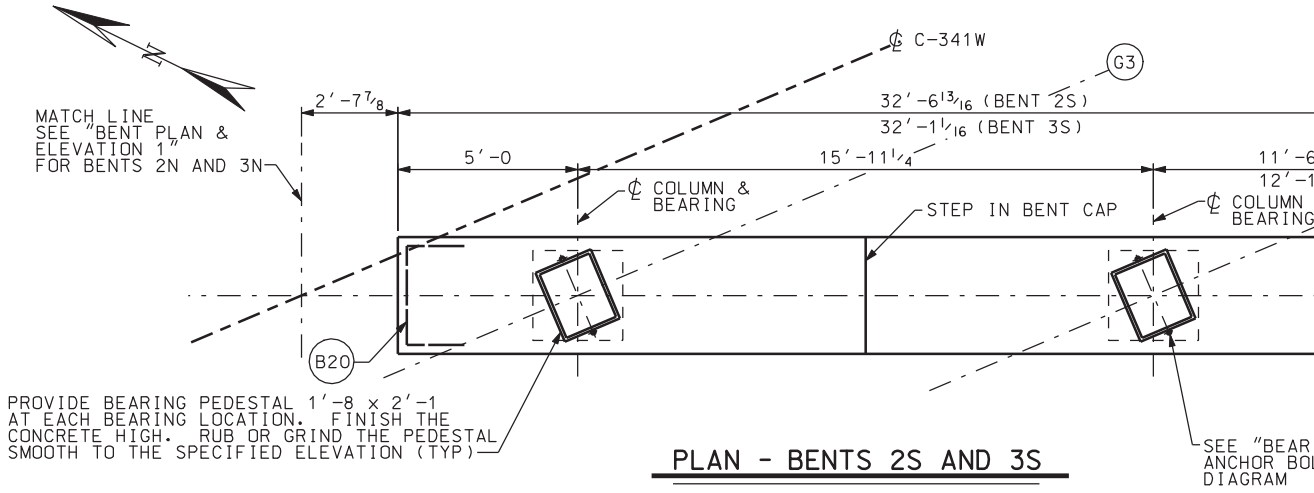


PLAN - BENTS 2S AND 3S

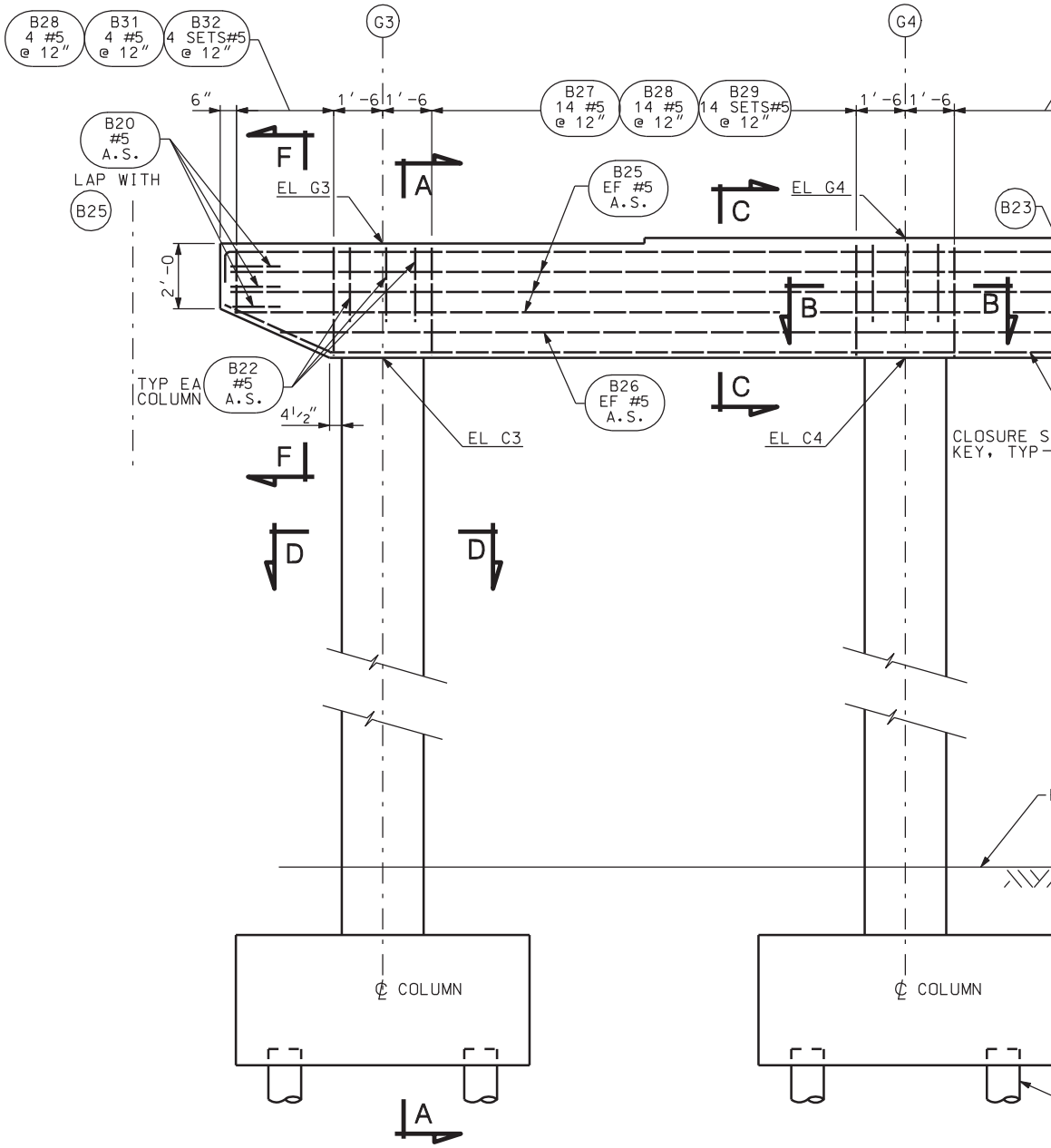


ELEVATION - BENTS 2S AND 3S

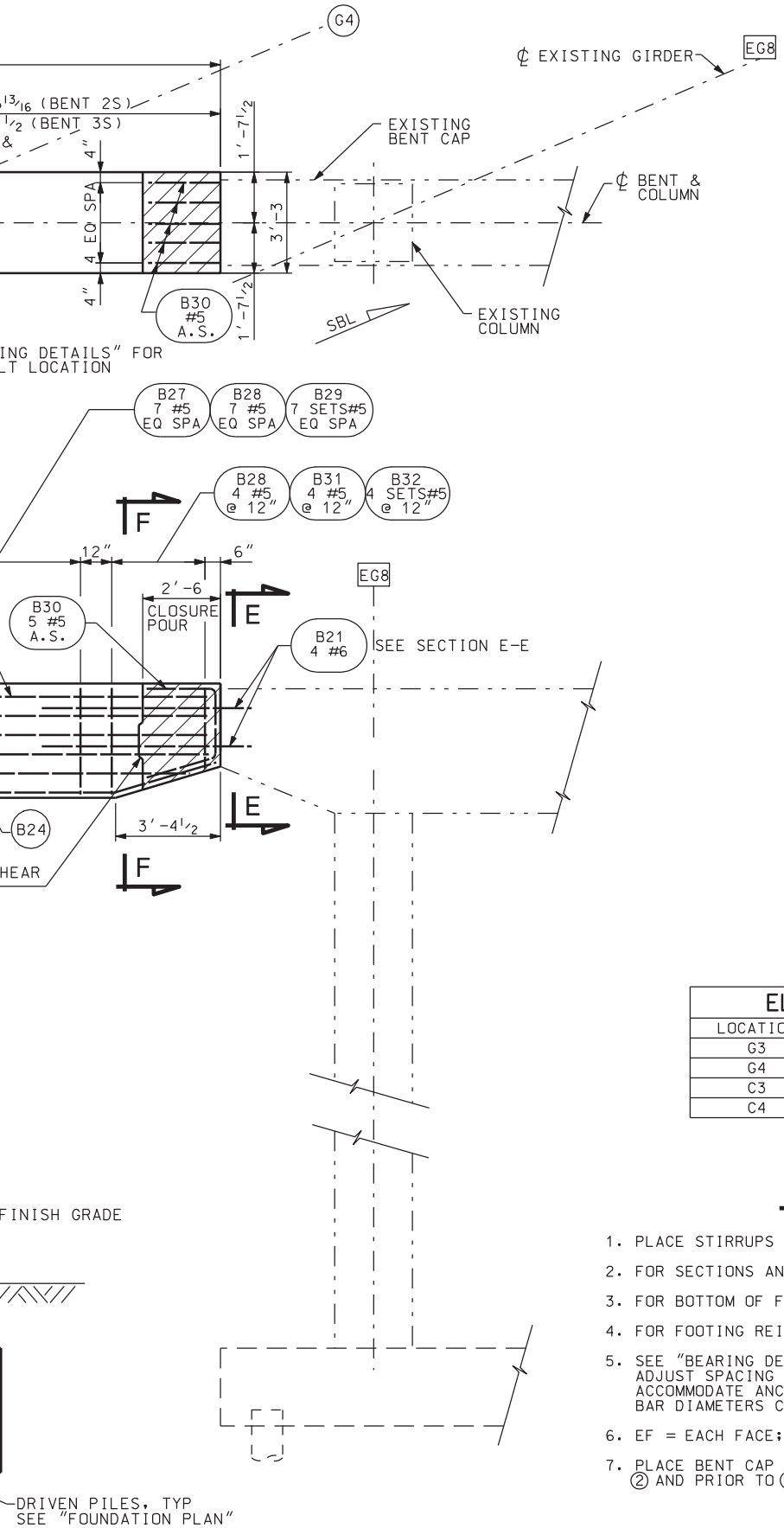


| ELEVATION SCHEDULE | | |
|---|---|---|
| LOCATION | BENT 2S | BENT 3S |
| G3 | 4569.29 | 4571.48 |
| G4 | 4569.61 | 4571.69 |
| C3 | 4565.79 | 4567.98 |
| C4 | 4566.11 | 4568.19 |

## NOTES

1. PLACE STIRRUPS NORMAL TO ℄ BENT.
2. FOR SECTIONS AND COLUMN REINFORCING, SEE "BENT DETAILS".
3. FOR BOTTOM OF FOOTING ELEVATIONS, SEE "FOUNDATION PLAN".
4. FOR FOOTING REINFORCING, SEE "BENT FOOTING DETAILS".
5. SEE "BEARING DETAILS" FOR BEARING AND ANCHOR BOLT DETAIL. ADJUST SPACING OF BENT CAP REINFORCING UP TO 4" TO ACCOMMODATE ANCHOR BOLTS. MAINTAIN AT LEAST TWO BAR DIAMETERS CLEAR SPACING BETWEEN BARS.
6. EF = EACH FACE; A.S. = AS SHOWN.
7. PLACE BENT CAP CLOSURE AFTER DECK SLAB POUR SEQUENCE ② AND PRIOR TO ③. SEE "DECK SLAB PLAN".

| QUANTITIES<br>STRUCTURAL CONCRETE | | |
|---|---|---|
| LOCATION | BENT 2S | BENT 3S |
| BENT CAP | 13.6 CY | 13.4 CY |
| COLUMN | 12.7 CY | 13.7 CY |
| TOTAL | 26.3 CY | 27.1 CY |

| NO. | DATE | BY | REMARKS |
|---|---|---|---|
| | | | |

REVISIONS

UTAH DEPARTMENT OF TRANSPORTATION
SALT LAKE CITY, UTAH
STRUCTURES DIVISION

DESIGN KTF 12/04 CHECK KMR 12/04
DRAWN BLP 12/04 CHECK JW 11/04
QUANT. KTF 10/04 CHECK JW 11/04

APPROVAL RECOMM. DATE SENIOR DESIGN ENGR.
APPROVED FOR USE BY UDOT DATE UDOT BRIDGE ENGR.

I-15; CORRIDOR IN UTAH COUNTY
I-15 OVER RAILROAD AT LEHI
BENT PLAN AND ELEVATION 2
PROJECT NUMBER SP-15-6(52)241

UTAH
COUNTY

C-341W
DRG. NO.

SHT. 12 OF 37

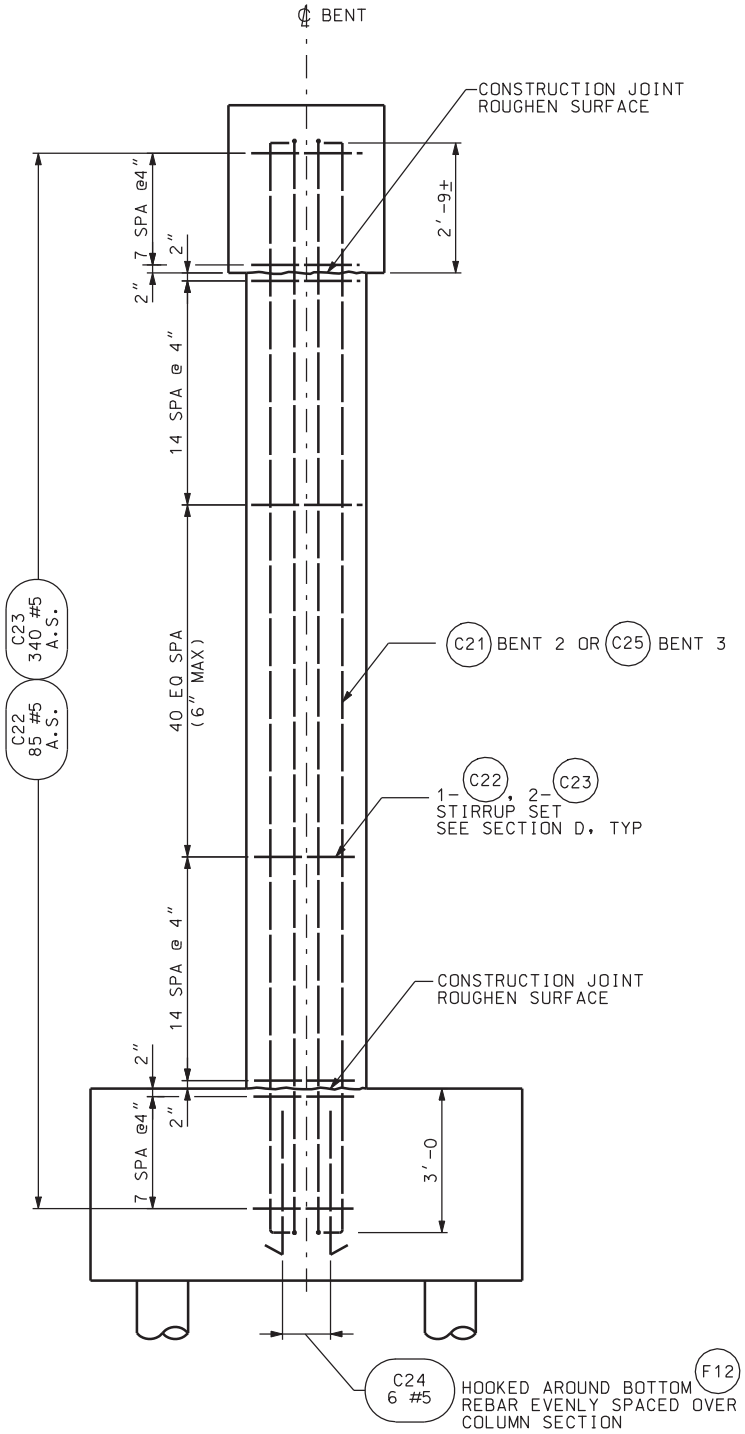


## SECTION A-A

SEE "BENT FOOTING DETAILS" FOR FOOTING REINFORCEMENT.

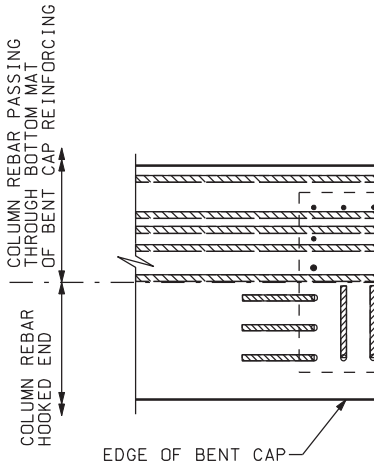


SECTI

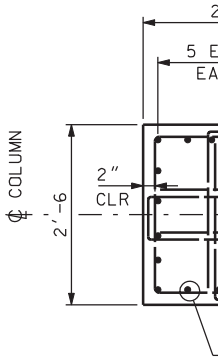


SECTI

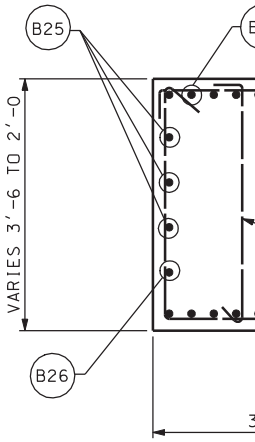


SECTI

DGN File: IP_PWPcdms1717\4433_C-341-13_BENTDT01.dgn

02-MAY-2005

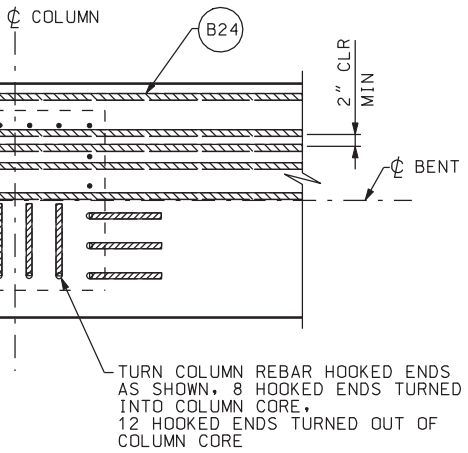


ON B-B

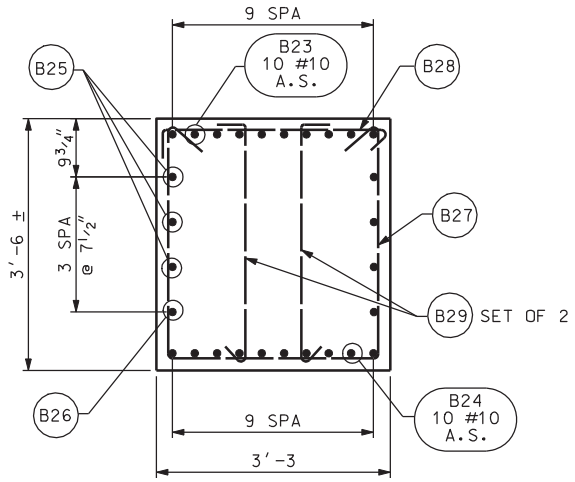


SECTION C-C

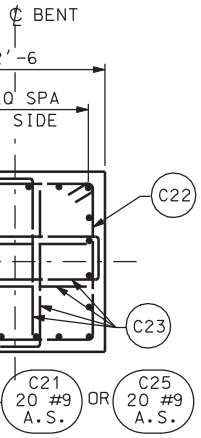


ON D-D

CHIP COVER OFF END OF CAP BEAM TO EXPOSE EXISTING REINFORCING. CORE DRILL BETWEEN BARS. ADJUST SPACING IF REQ'D. REMAINING END SURFACE TO BE ROUGHENED.

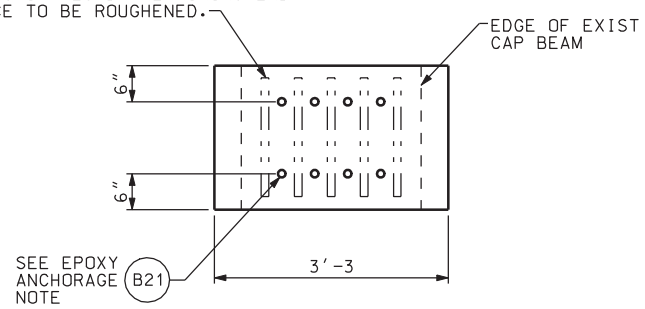


SECTION E-E

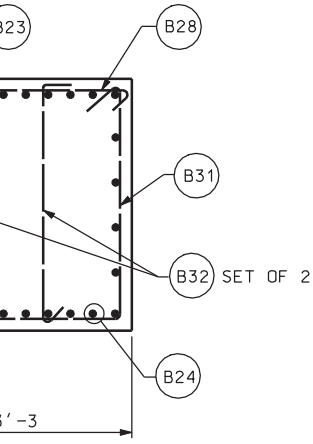


ON F-F

## EPOXY ANCHORAGE NOTE

USE APPROVED EPOXY ANCHORAGE TO DEVELOP A MINIMUM PULLOUT STRENGTH OF 26.4 KIPS. 12 INCHES EMBEDMENT IS ASSUMED IN SIZING THE REINFORCEMENT. DRILLING AND PREPARATION FOR ANCHORAGE OF REINFORCEMENT AND CONCRETE REMOVAL ARE INCIDENTAL TO THE COST FOR THE BID ITEM "PREPARE BRIDGE FOR WIDENING".

## NOTES

1. ADJUST SPACING OF PILE CAP AND BENT CAP REINFORCING UP TO 4" TO ACCOMMODATE COLUMN REINFORCING. MAINTAIN AT LEAST THREE BAR DIAMETER SPACING.
2. ADJUST HOOP AND TIE REINFORCING TO AVOID CONFLICT WITH BENT CAP REINFORCING.

| NO. | DATE | BY | REMARKS |
|---|---|---|---|

REVISIONS

UTAH DEPARTMENT OF TRANSPORTATION
SALT LAKE CITY, UTAH
STRUCTURES DIVISION

DESIGN KTF 10/04 CHECK KMR 12/04
DRAWN BLP 10/04 CHECK JW 11/04
QUANT. KTF 10/04 CHECK JW 11/04

APPROVAL RECOMM. DATE SENIOR DESIGN ENGR.
APPROVED FOR USE BY UDOT DATE UDOT BRIDGE ENGR.

I-15; CORRIDOR IN UTAH COUNTY
I-15 OVER RAILROAD AT LEHI
BENT DETAILS
PROJECT NUMBER SP-15-6(52)241

UTAH
COUNTY

C-341W
DRG. NO.

SHT. 13 OF 37

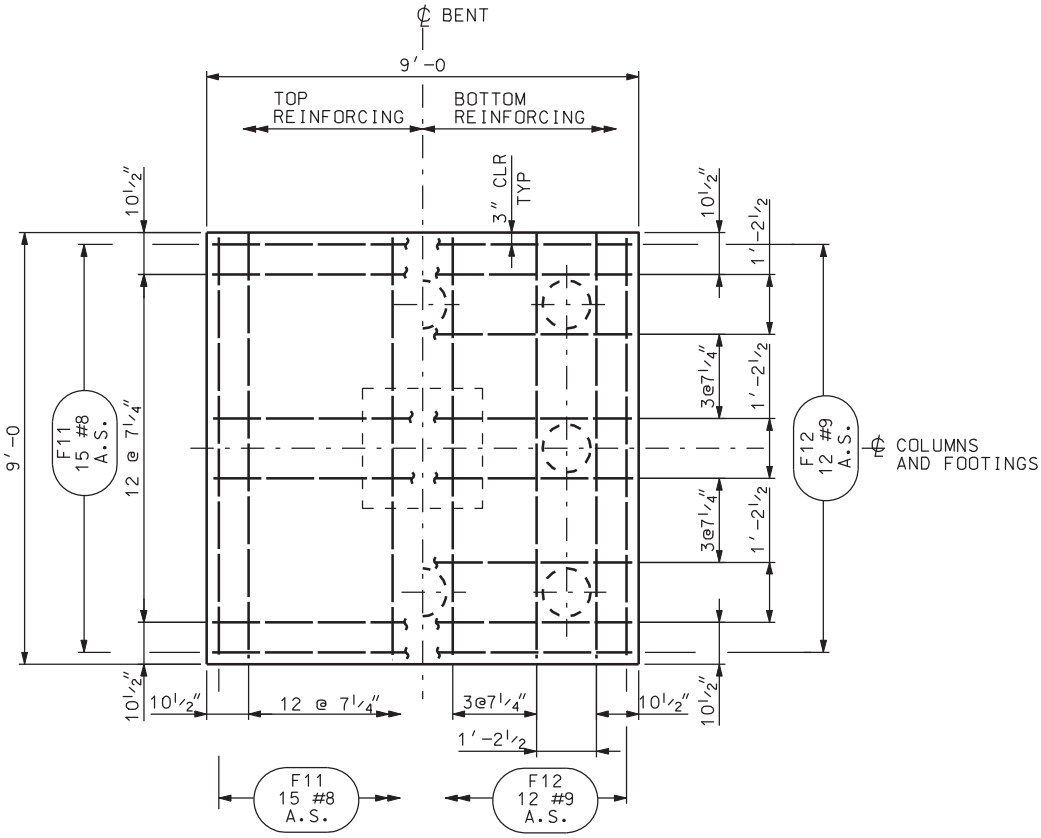


## FOOTING PLAN - BENTS 2 AND 3

ADJUST SPACING OF PILE CAP REINFORCEMENT UP TO 4" TO ACCOMMODATE COLUMN REINFORCEMENT AND PILE REINFORCEMENT.

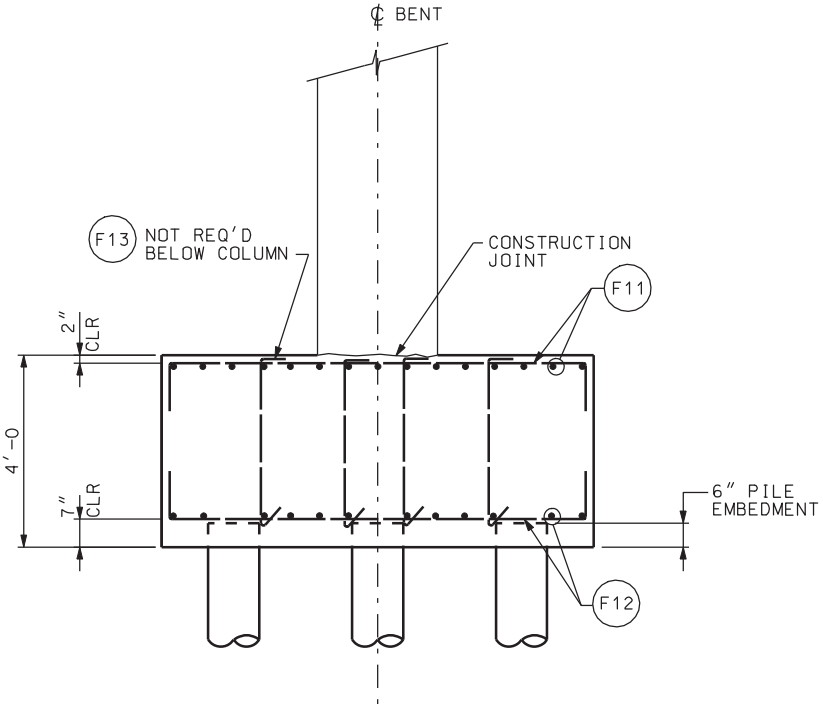


## ELEVATION - BENTS 2 AND 3

COLUMN AND PILE REINFORCEMENT NOT SHOWN FOR CLARITY.

DGN File:IP_PWPcdnsl1717\4433_C-341-14_BENTDT02.dgn
02-MAY-2005

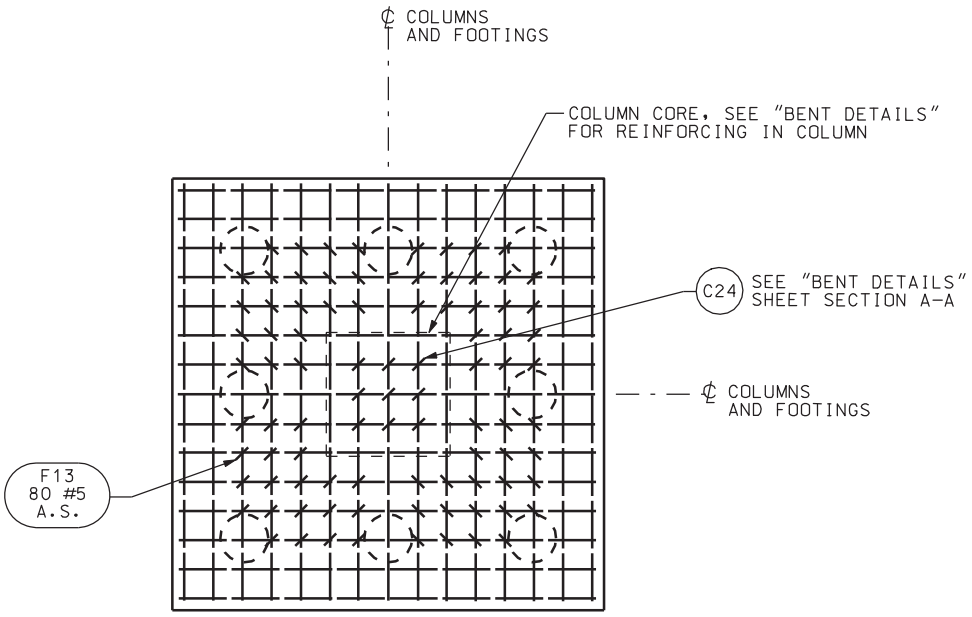


## FOOTING TIE SPACING

TOP REINFORCING SHOWN, HOOK BARS AROUND BOTTOM MAT OF REINFORCING AS SHOWN IN ELEVATION.

| QUANTITIES | |
|---|---|
| STRUCTURAL CONCRETE | |
| BENTS 2 & 3 (8 LOCATIONS) | 96.0 CY |

| NO. | DATE | BY | REMARKS |
|---|---|---|---|
| | | | |

REVISIONS

UTAH DEPARTMENT OF TRANSPORTATION
SALT LAKE CITY, UTAH
STRUCTURES DIVISION

DESIGN KTF 10/04 CHECK KMR 12/04
DRAWN BLP 10/04 CHECK JW 11/04
QUANT. KTF 11/04 CHECK JW 11/04

APPROVAL RECOMM. DATE SENIOR DESIGN ENGR.
APPROVED FOR USE BY UDOT DATE UDOT BRIDGE ENGR.

I-15; CORRIDOR IN UTAH COUNTY
I-15 OVER RAILROAD AT LEHI
BENT FOOTING DETAILS

PROJECT NUMBER SP-15-6(52)241

UTAH
COUNTY

C-341W
DRG. NO.

SHT. 14 OF 37

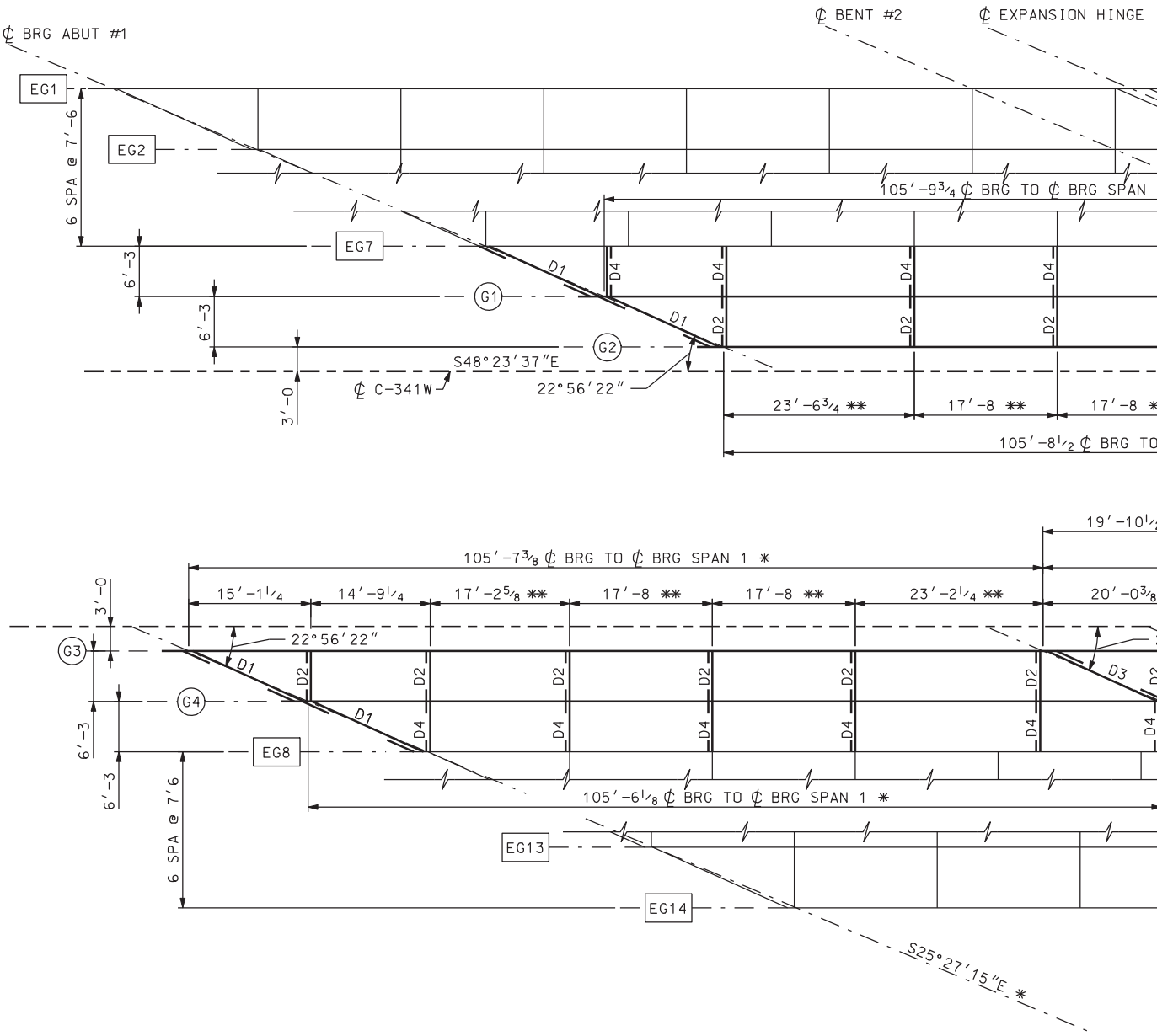


## NOTES

1. (G1) (G2) (G3) (G4) ARE PARALLEL TO BEARING S48°23'37"E.
2. SEE "GIRDER DETAILS 1" SHEET FOR GENERAL NOTES AND TYPICAL DETAILS.
3. SEE "GIRDER DETAILS 2" SHEET FOR GIRDER ELEVATIONS.
4. SEE "GIRDER DETAILS 3" SHEET FOR PIN AND HANGER DETAILS.
5. SEE "DIAPHRAGM DETAILS 1", "DIAPHRAGM DETAILS 2" AND "DIAPHRAGM DETAILS 3" SHEETS FOR DIAPHRAGM DETAILS.

F

DGN File:IP_PWPcdnsl717\4433_C-341-15_FRAM01.dgn
02-MAY-2005

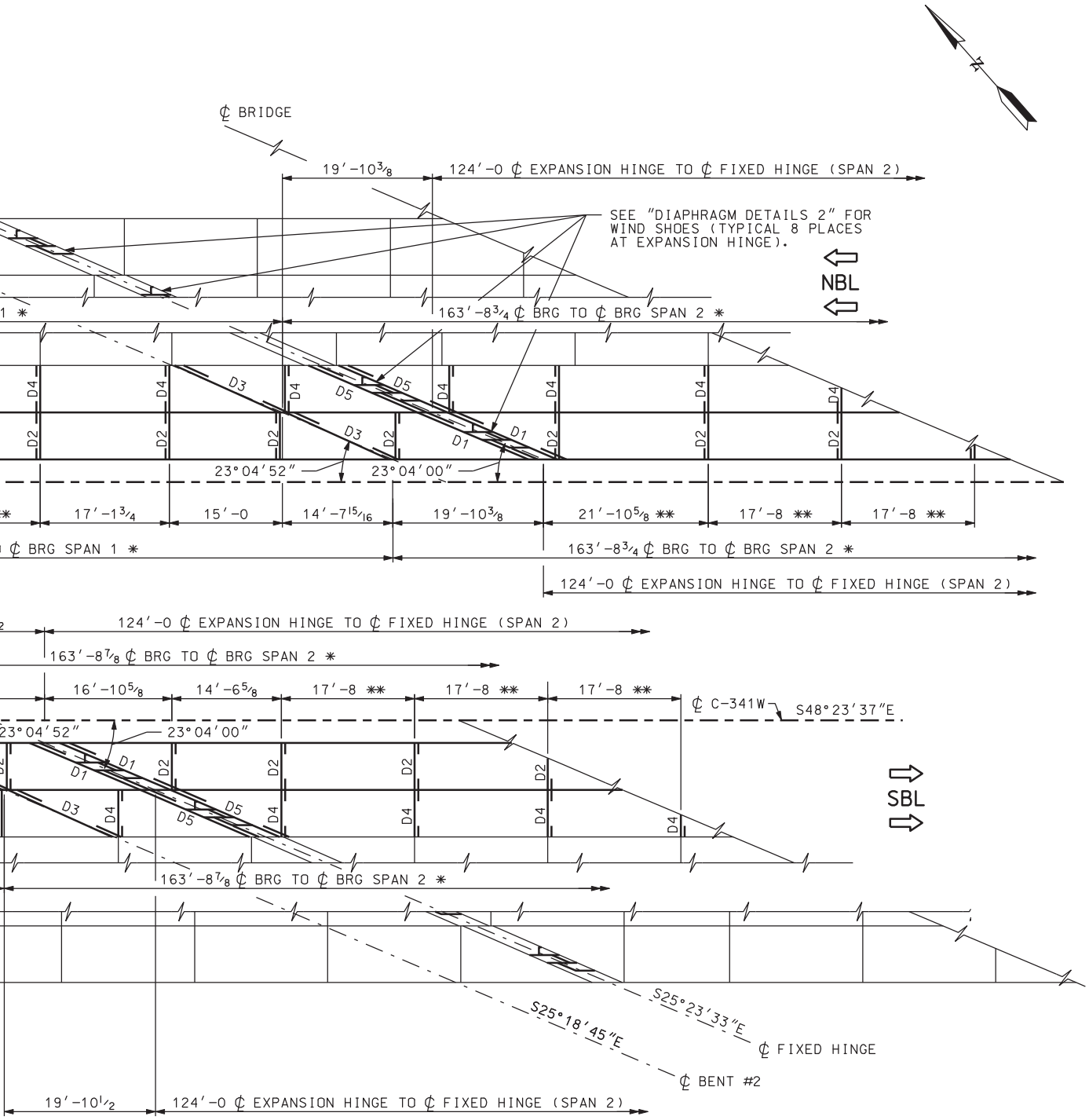


FRAMING PLAN

✱ SEE "SITUATION & LAYOUT 1" SHEET GENERAL NOTE 6.

✱✱ FIELD VERIFY EXISTING DIAPHRAGM LOCATION. LINE UP NEW DIAPHRAGM WITH EXISTING DIAPHRAGMS.

EG1 — - — - · EXISTING GIRDER MARK NUMBER

G1 — - — - — NEW GIRDER MARK NUMBER

| NO. | DATE | BY | REMARKS |
|---|---|---|---|

REVISIONS

UTAH DEPARTMENT OF TRANSPORTATION
SALT LAKE CITY, UTAH
STRUCTURES DIVISION

DESIGN JW 11/04 CHECK LJP 12/04
DRAWN JW 12/04 CHECK PBB 12/04
QUANT. CHECK

APPROVAL RECOMM. DATE SENIOR DESIGN ENGR.
APPROVED FOR USE BY UDOT DATE UDOT BRIDGE ENGR.

I-15; CORRIDOR IN UTAH COUNTY
I-15 OVER RAILROAD AT LEHI
FRAMING PLAN 1
PROJECT NUMBER SP-15-6(52)241

UTAH
COUNTY

C-341W
DRG. NO.

SHT. 15 OF 37

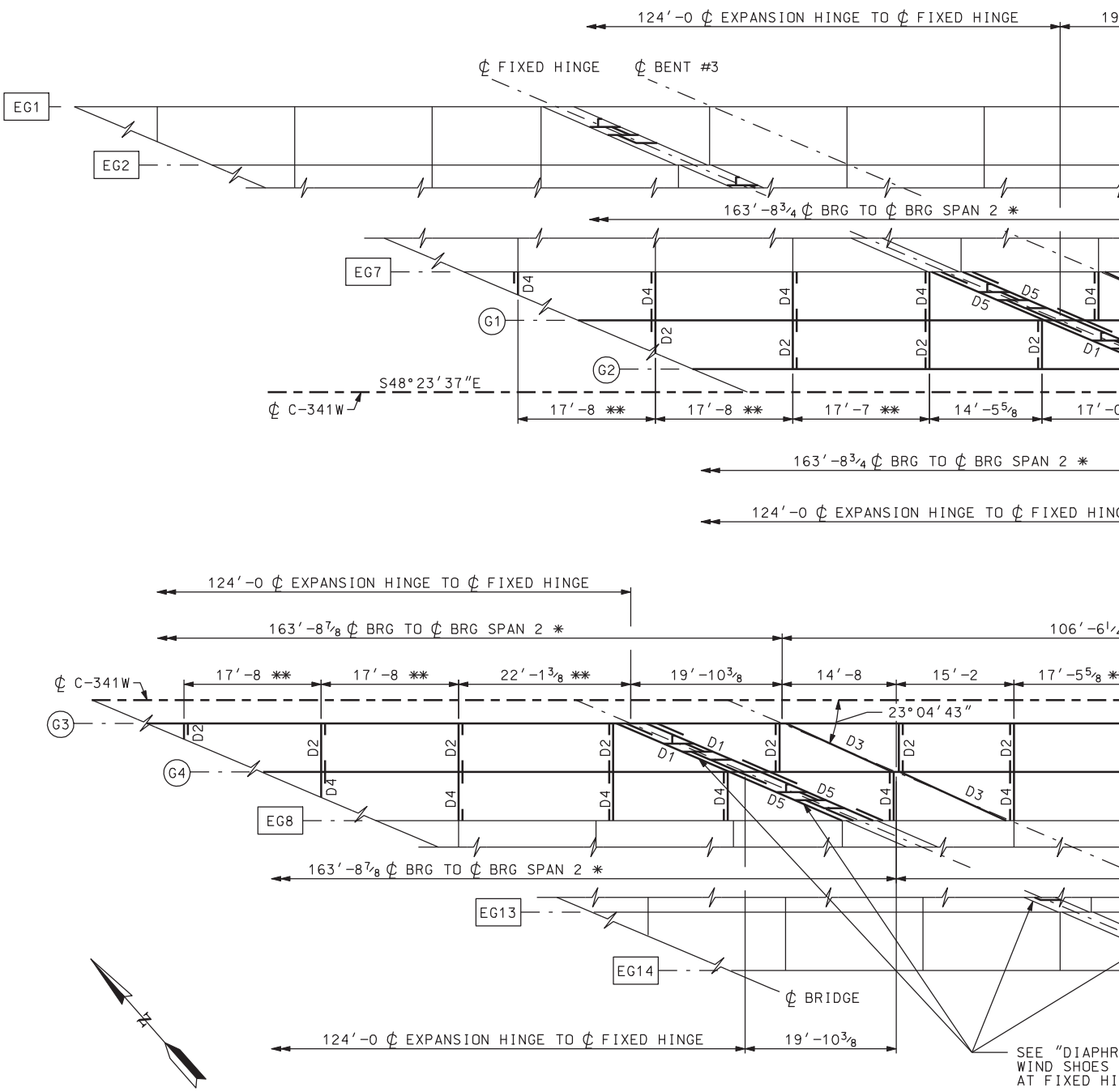


FRAMIN

DGN File:IP_PWPcdms1717\4433_C-341-16_FRAM02.dgn

02-MAY-2005

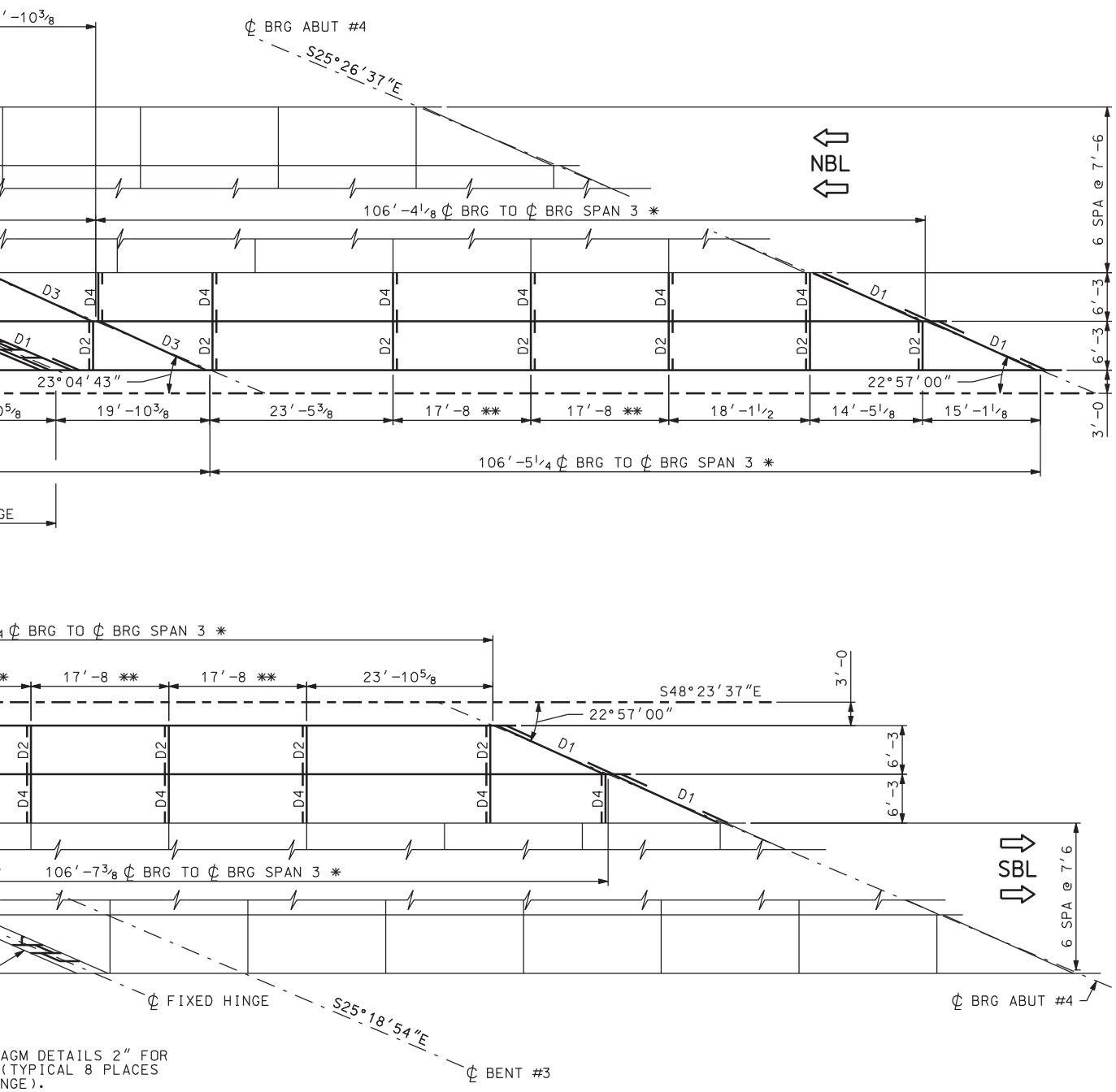


AGM DETAILS 2" FOR
(TYPICAL 8 PLACES
NGE).

NG PLAN

* SEE "SITUATION & LAYOUT 1" SHEET GENERAL NOTE 6.

** FIELD VERIFY EXISTING DIAPHRAGM LOCATION. LINE UP NEW DIAPHRAGM WITH EXISTING DIAPHRAGMS.

EG1 — - — - · EXISTING GIRDER MARK NUMBER

(G1) — - — - — NEW GIRDER MARK NUMBER

## NOTES

1. SEE "FRAMING PLAN 1" FOR APPLICABLE NOTES.

| NO. | DATE | BY | REMARKS |
|---|---|---|---|

REVISIONS

UTAH DEPARTMENT OF TRANSPORTATION
SALT LAKE CITY, UTAH
STRUCTURES DIVISION

DESIGN JW 12/04 CHECK LJP 12/04
DRAWN JW 12/04 CHECK PBB 12/04
QUANT. CHECK

APPROVAL RECOMM. DATE SENIOR DESIGN ENGR.
APPROVED FOR USE BY UDOT DATE UDOT BRIDGE ENGR.

I-15; CORRIDOR IN UTAH COUNTY
I-15 OVER RAILROAD AT LEHI
FRAMING PLAN 2
PROJECT NUMBER SP-15-6(52)241

UTAH
COUNTY

C-341W
DRG. NO.

SHT. 16 OF 37

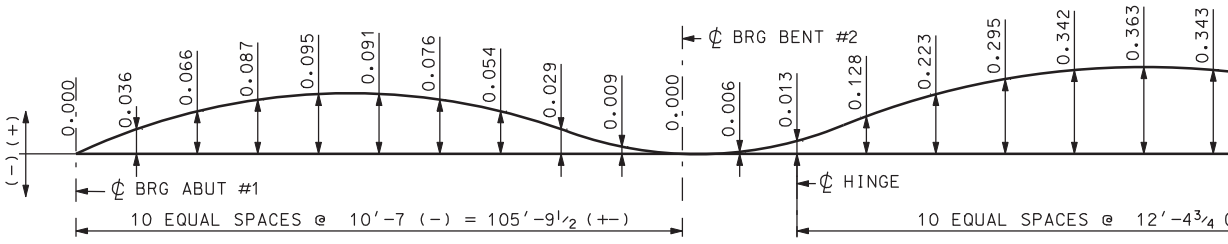


EXTERIOR GIRDE

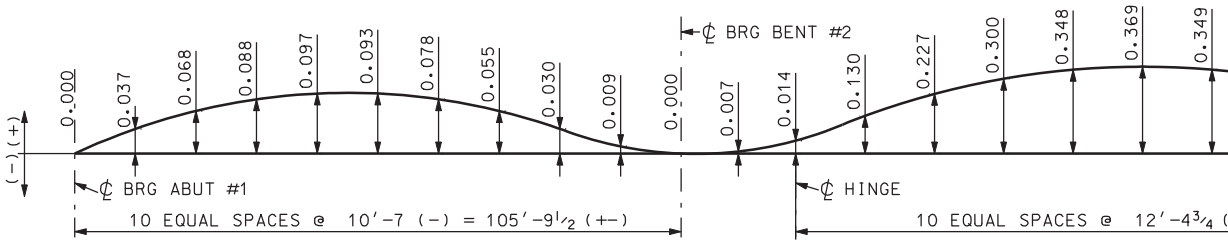


INTERIOR GIRDER

CAMBER DIAGR

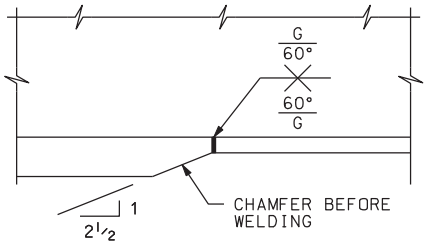


TYPICAL FLANGE SPLICE DETAIL

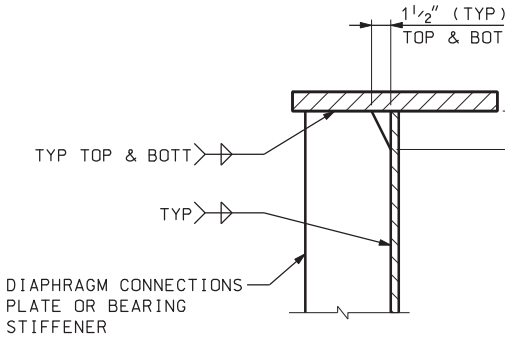


STIFFENER DETAIL

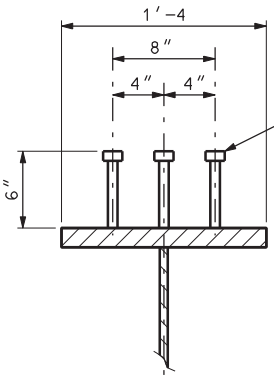


GIRDERS

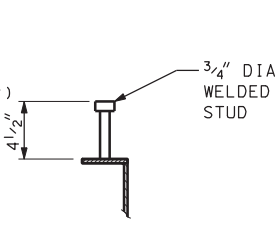


BENT DIAPHRAGMS

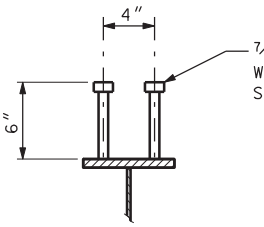


ABUTMENT AND HINGE
END DIAPHRAGMS

SHEAR STUD DETAIL

DGN File:IP_PWPcdms1717\4433_C-341-17_STEEL01.dgn
02-MAY-2005

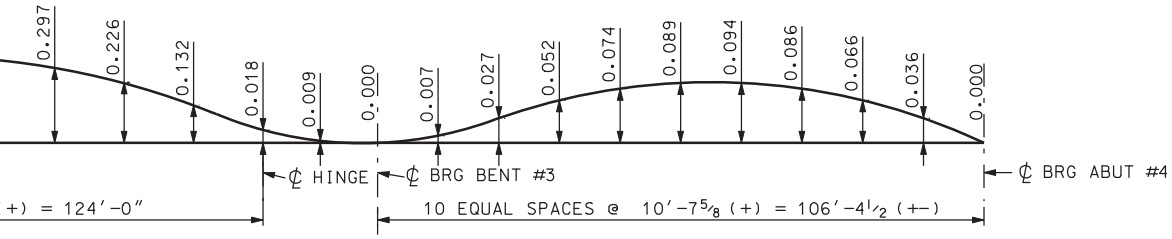


R

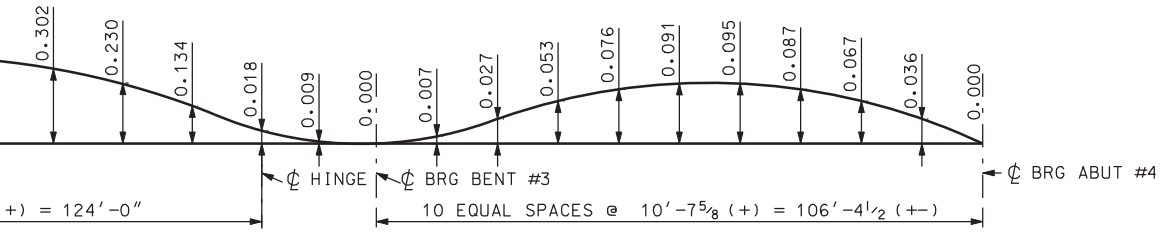


R

AM

NOTE:
CAMBER ORDINATES SHOWN IN FEET.

T

3″ (TYP)
TOP & BOTT

8″ DIA
ELDED
TUD (TYP)

## NOTES

1. CAMBER ORDINATE IS FOR DEAD LOAD DEFLECTION ONLY AT THE TENTH POINTS ALONG THE GIRDER. THE FABRICATOR IS RESPONSIBLE FOR CORRECTIONS TO CAMBER BASED ON GRADE.
2. PERFORM CHARPY V-NOTCH TOUGHNESS TEST ON ALL MAIN LOAD CARRYING MEMBERS SUBJECT TO TENSION STRESS, INDICATED BY ⊕. TEST RESULTS SHALL MEET REQUIREMENTS FOR ZONE 2.
3. ALL DIMENSIONS SHOWN ARE HORIZONTAL. ADJUST LENGTHS AS NECESSARY IN FABRICATION SHALL TAKE VERTICAL GRADE INTO ACCOUNT.
4. ALL INTERMEDIATE CROSS FRAME STIFFENERS ARE NORMAL TO THE WEB. BEARING STIFFENERS ARE PARALLEL TO THE ABUTMENT CENTERLINE OF BEARINGS.
5. CENTERLINES OF GIRDERS ARE PARALLEL TO CENTERLINE C-341W.
6. INCLUDE THE PRICE FOR STEEL STUDS, BOLTS AND STIFFENERS IN THE CONTRACT PRICE FOR STRUCTURAL STEEL.
7. SEE "BEARING DETAILS" SHEET FOR SOLE PLATE AND BEARING DETAILS.
8. USE STRUCTURAL STEEL CONFORMING TO AASHTO M270 GRADE 36 MINIMUM FOR ALL STRUCTURAL STEEL.
9. CONFORM WELDING, WELDER QUALIFICATIONS, PREQUALIFICATION OF WELD DETAILS AND INSPECTION OF WELDS TO THE REQUIREMENTS OF THE ANSI/AASHTO/AWS BRIDGE WELDING CODE D1.5.
10. THE METHODS OF JOINT PREPARATION FOR WELDING SHOWN ON THE PLANS ARE BASED ON THE USE OF MANUAL SHIELDED METAL-ARC WELDING. THE USE OF THIS OR ANY OTHER WELDING PROCESS WILL BE SATISFACTORY ONLY AFTER THE WELDING PROCEDURE HAS BEEN SUBMITTED BY THE CONTRACTOR AND APPROVED BY THE ENGINEER.
11. USE THE MINIMUM SIZED STRENGTH FILLET WELDS REQUIRED BY ANSI/AASHTO/AWS BRIDGE WELDING CODE D1.5 FOR THE THICKNESS OF THE MATERIAL JOINED UNLESS OTHERWISE SPECIFIED. USE MINIMUM FILLET WELD SIZE OF ¼″ EXCEPT WHERE NOTED OTHERWISE.
12. DIMENSIONS SHOWN ON THE PLANS ASSUME THE AMBIENT TEMPERATURE OF THE GIRDER TO BE 70°F. CORRECT THE LENGTH USED IN FABRICATION AT THE RATE OF ± 1/16″ PER EACH 100′ OF LENGTH FOR EVERY 10°F DIFFERENCE IN TEMPERATURE TO ALLOW FOR EXPANSION AND CONTRACTION.
13. DO NOT FIELD WELD TO GIRDERS EXCEPT WHERE NOTED.
14. USE ⅞″ DIA HIGH STRENGTH BOLTS CONFORMING TO ASTM A325, TYPE 1, FOR ALL BOLTED CONNECTIONS UNLESS NOTED OTHERWISE.

| NO. | DATE | BY | REMARKS |
|---|---|---|---|
| | | | |

REVISIONS

UTAH DEPARTMENT OF TRANSPORTATION
SALT LAKE CITY, UTAH
STRUCTURES DIVISION

DESIGN JW 11/04 CHECK LJP 12/04
DRAWN JW 12/04 CHECK PBB 12/04
QUANT. CHECK

APPROVAL RECOMM. DATE SENIOR DESIGN ENGR.
APPROVED FOR USE BY UDOT DATE UDOT BRIDGE ENGR.

I-15; CORRIDOR IN UTAH COUNTY
I-15 OVER RAILROAD AT LEHI
GIRDER DETAILS 1

PROJECT NUMBER SP-15-6(52)241

UTAH
COUNTY

C-341W
DRG. NO.

SHT. 17 OF 37

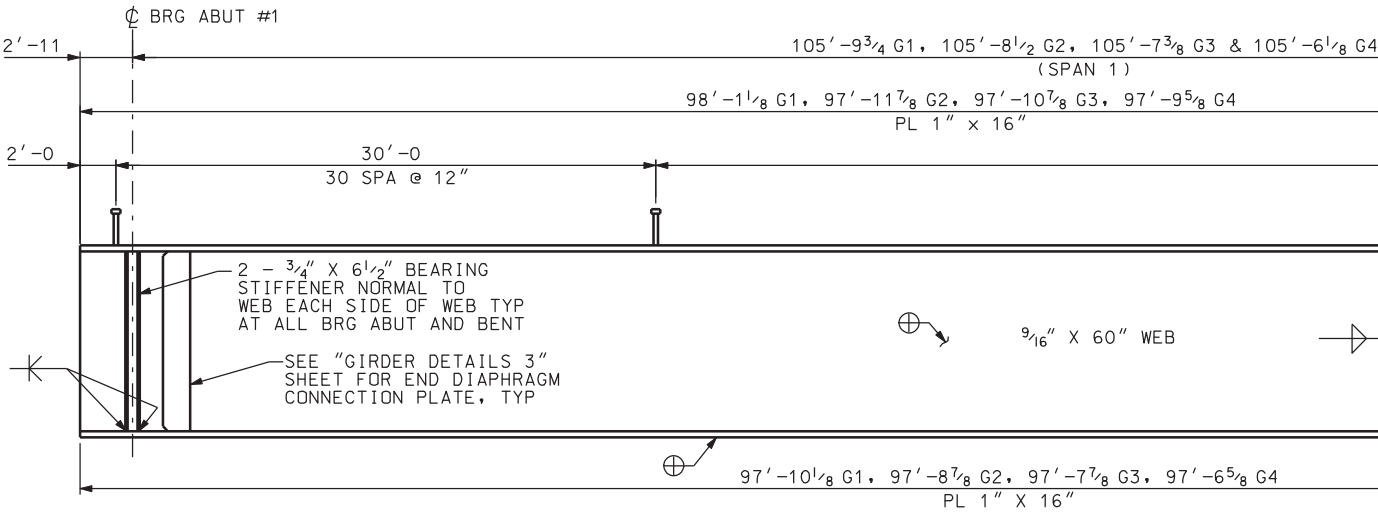


GIRDER ELEVATION - SPAN I AN

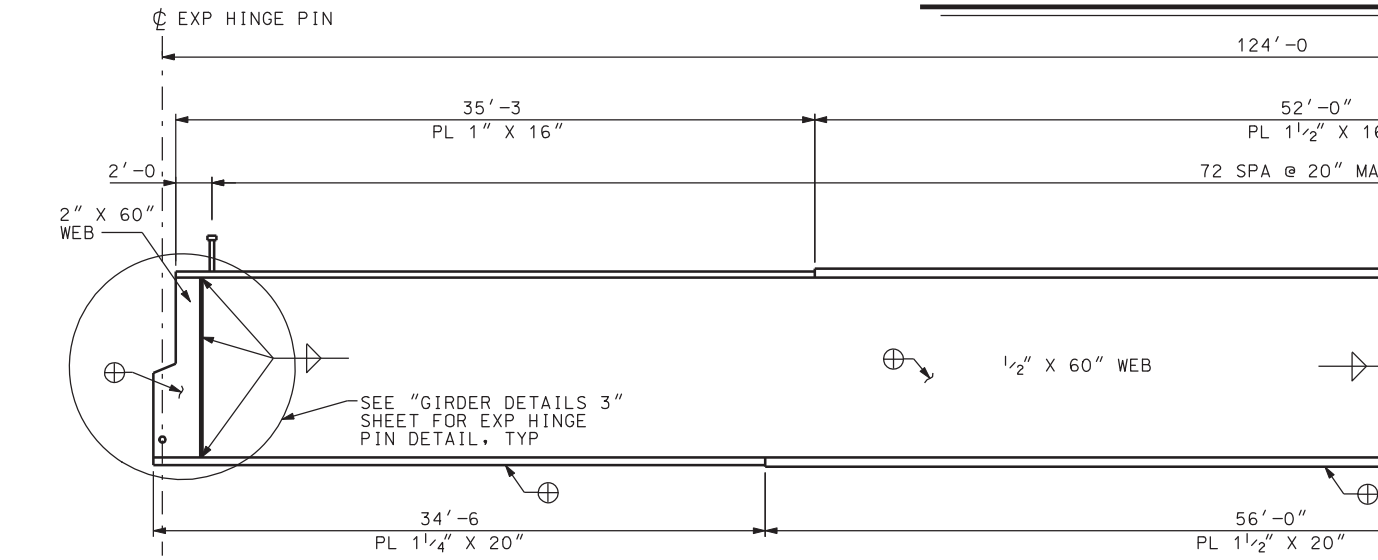


GIRDER ELEVATION - SPAN

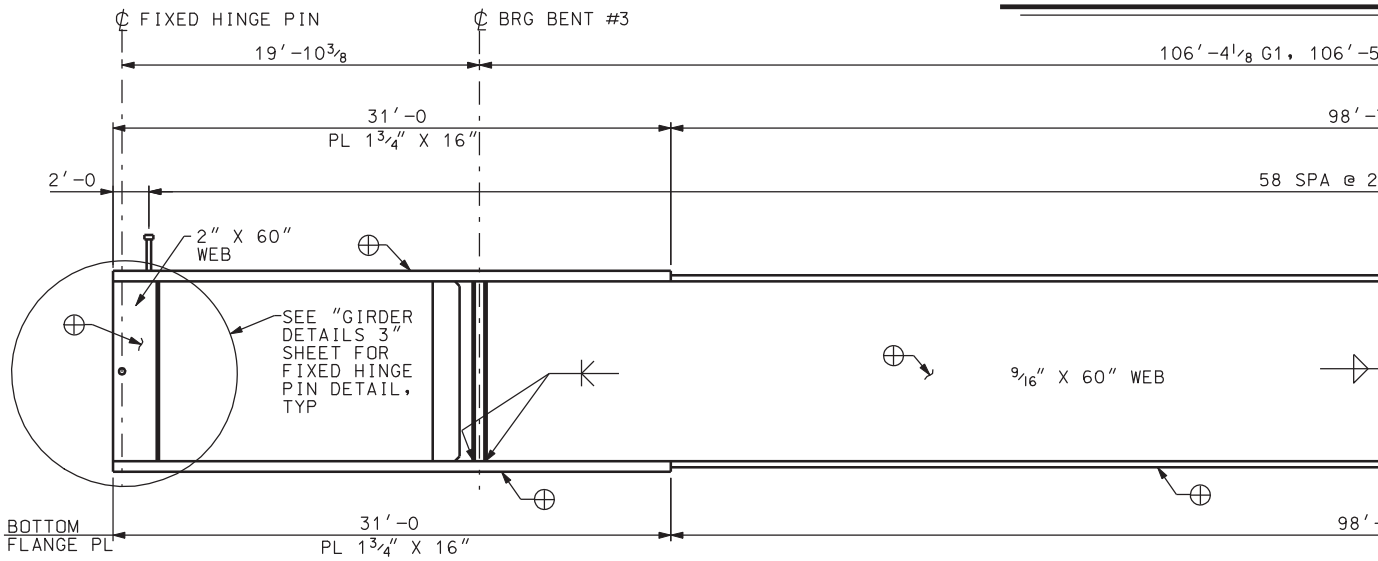


GIRDER ELEVATION - SPAN 2 AN

DGN File:IP_PWPcdms1717\4433_C-341-18_STEEL02.dgn
02-MAY-2005

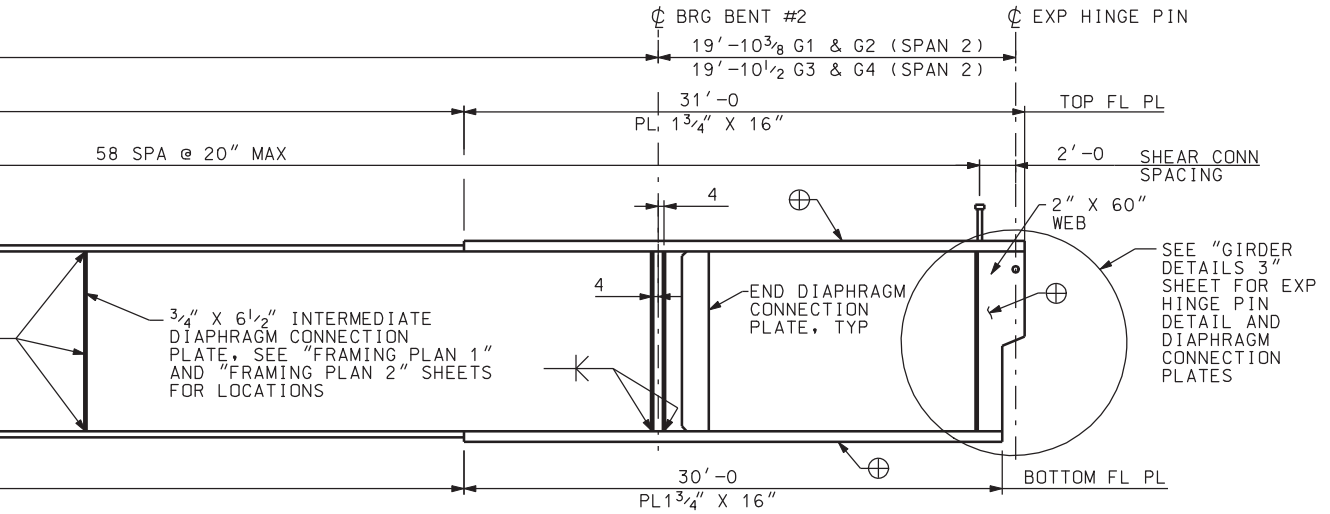


D SPAN 2

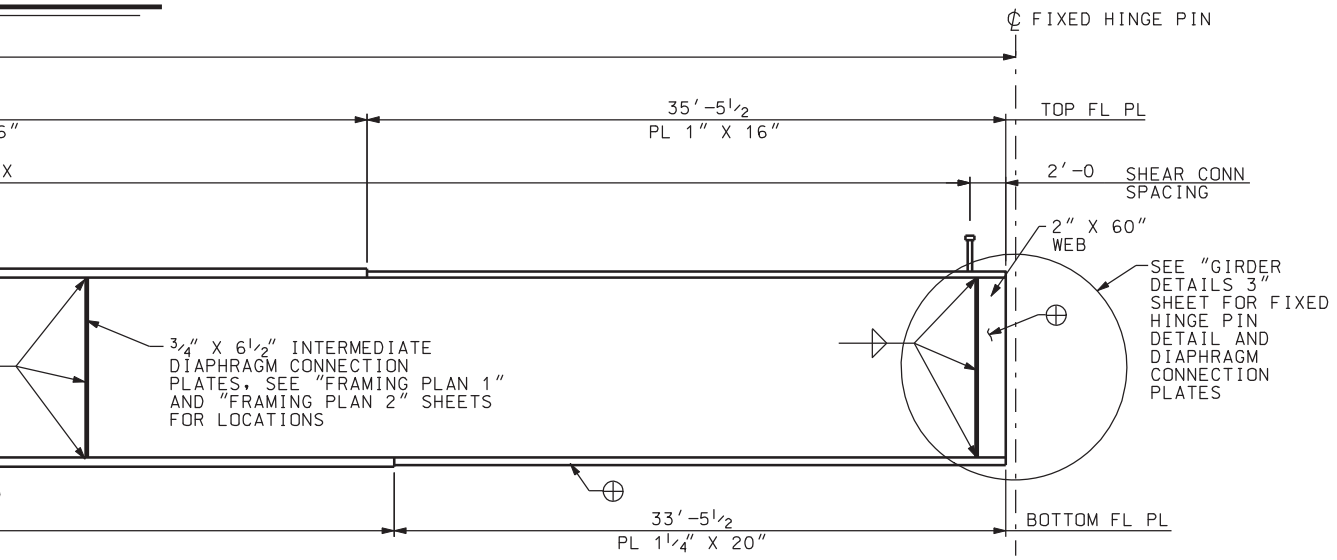


N 2

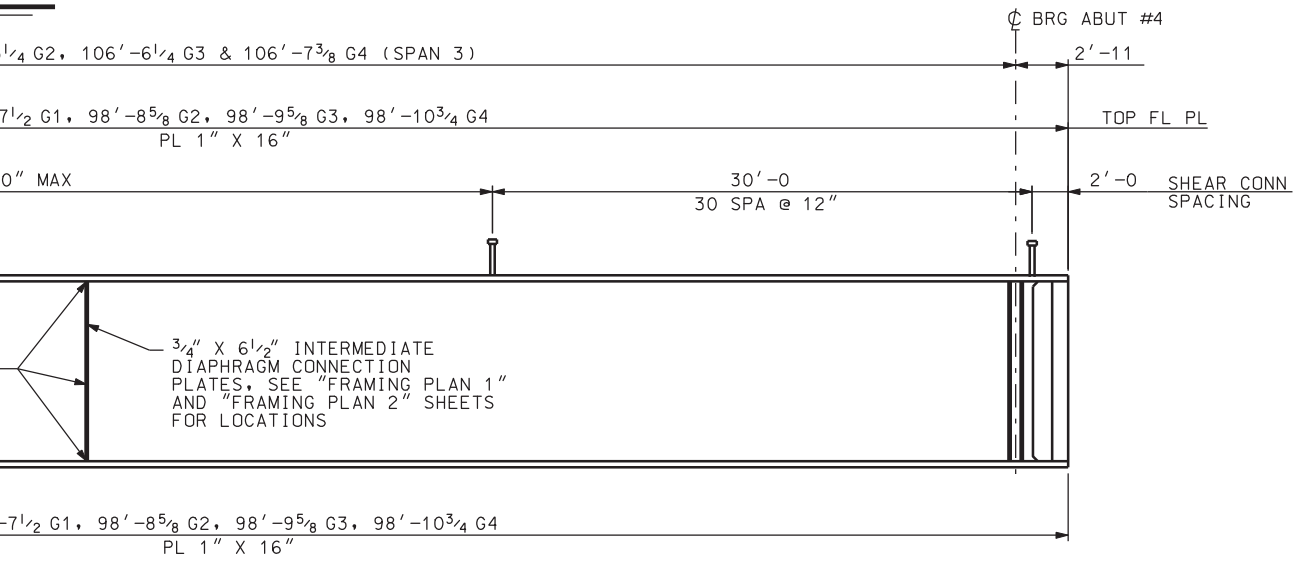


D SPAN 3

| NO. | DATE | BY | REMARKS |
|---|---|---|---|
| | | | |

REVISIONS

UTAH DEPARTMENT OF TRANSPORTATION
SALT LAKE CITY, UTAH
STRUCTURES DIVISION

DESIGN JW 11/04 CHECK LJP 12/04
DRAWN BLP 12/04 CHECK PBB 12/04
QUANT. CHECK

APPROVAL RECOMM. DATE SENIOR DESIGN ENGR.
APPROVED FOR USE BY UDOT DATE UDOT BRIDGE ENGR.

I-15; CORRIDOR IN UTAH COUNTY
I-15 OVER RAILROAD AT LEHI
GIRDER DETAILS 2

PROJECT NUMBER SP-15-6(52)241

UTAH
COUNTY

C-341W
DRG. NO.

SHT. 18 OF 37

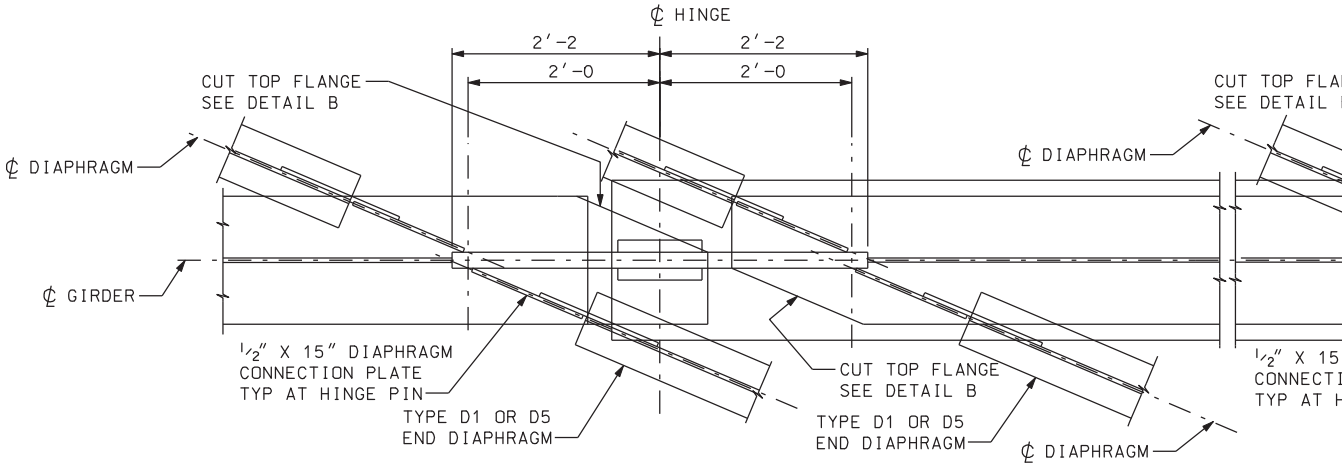


GIRDER TOP VIEW AT H

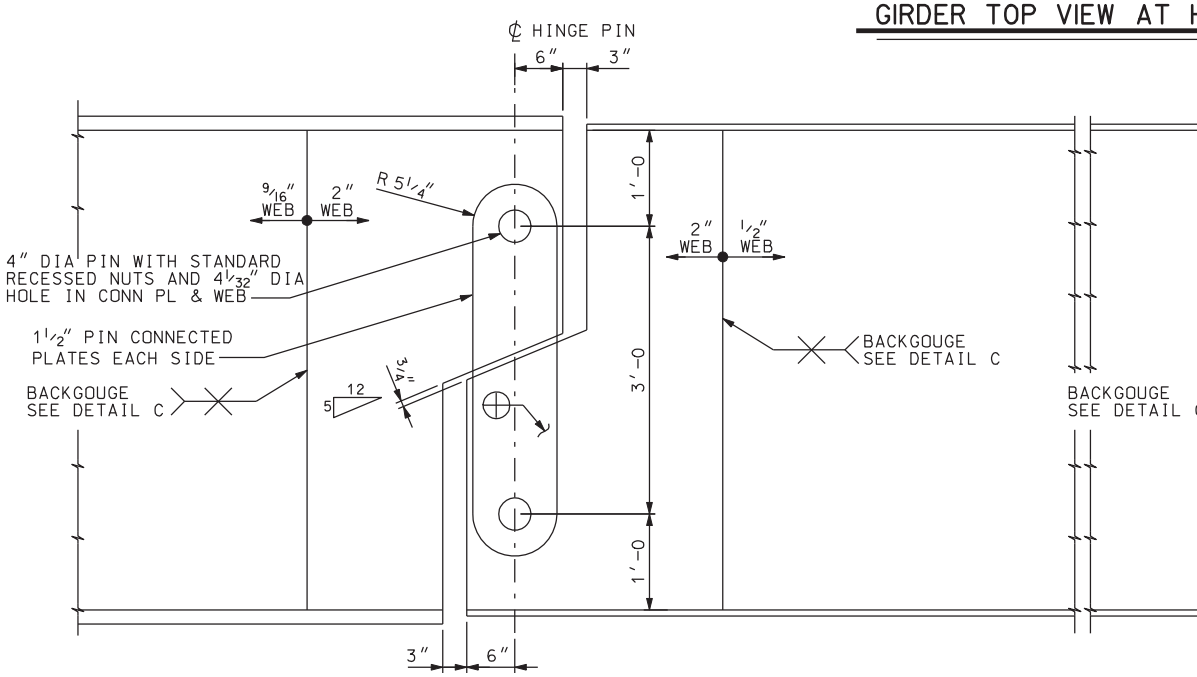


ELEVATION EXPANSION HINGE

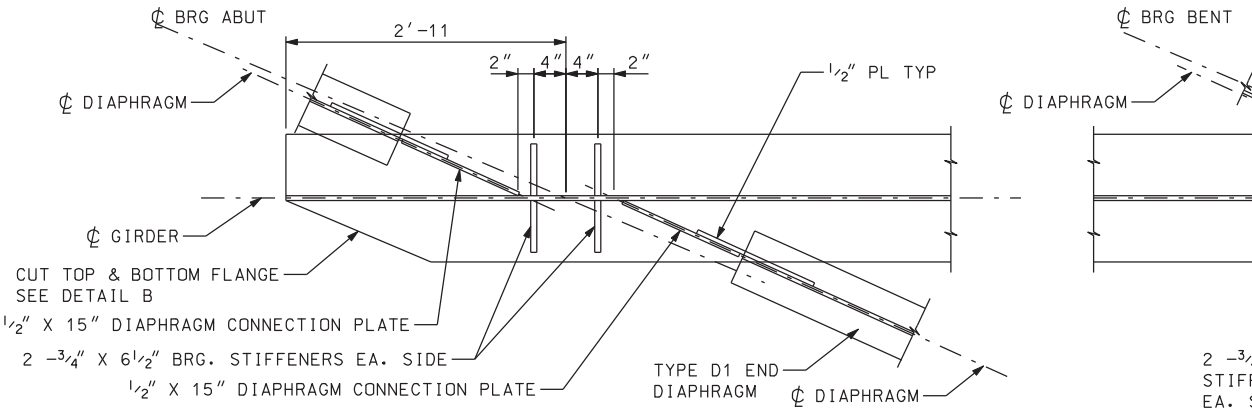


AT ABUTMENTS

ABUTMENT #1 SHOWN. ABUTMENT #4 SIMILAR.

GIRDER TOP VIEW

DGN File:IP_PWPcdns1717\4433_C-341-19_STEEL03.dgn
02-MAY-2005

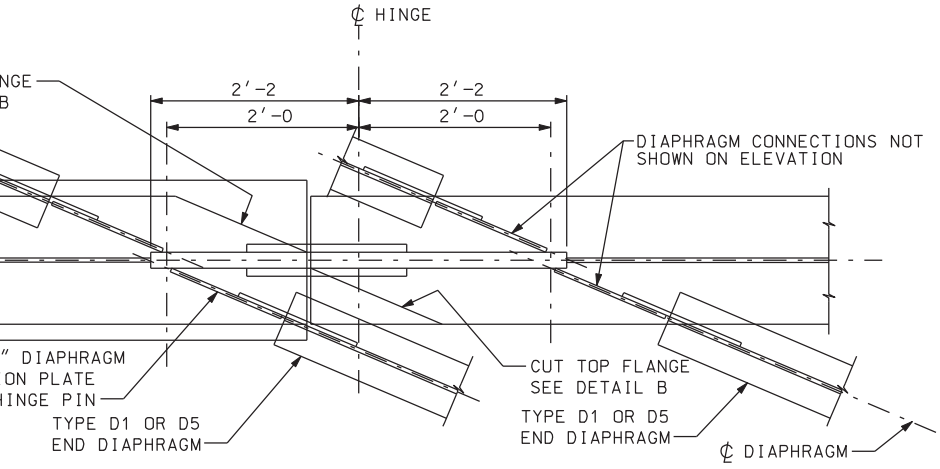


HINGES

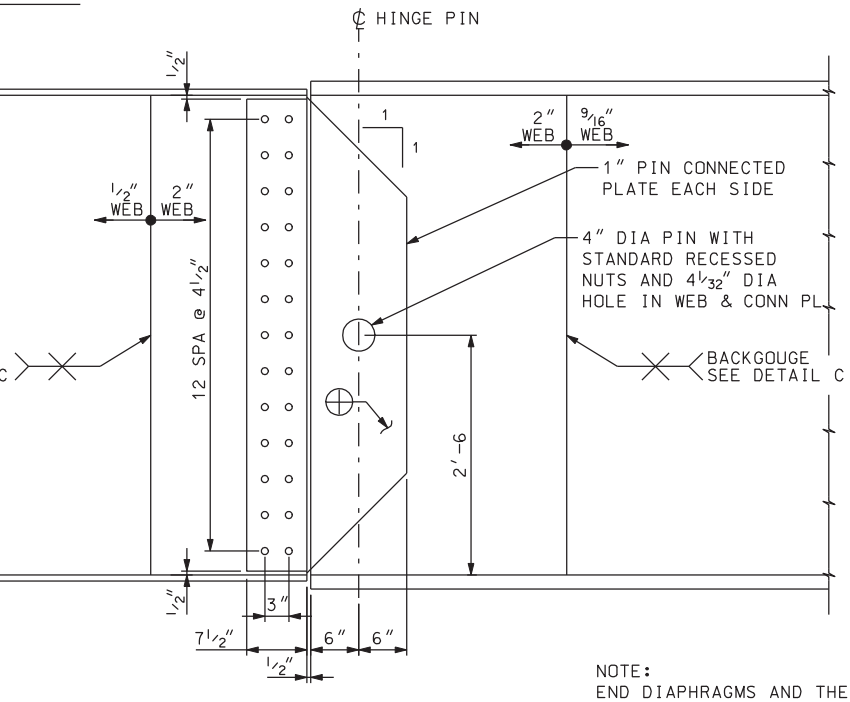


ELEVATION FIXED HINGE

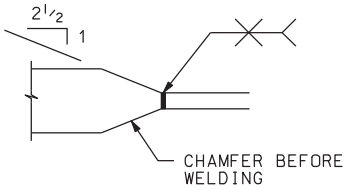


DETAIL C

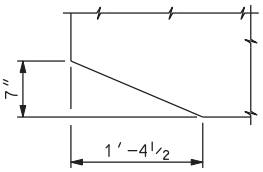


DETAIL B

NOTE:
END DIAPHRAGMS AND THEIR CONNECTION PLATES ARE NOT PARALLEL TO ℄ BEARING OF ABUTMENTS AND BENTS.

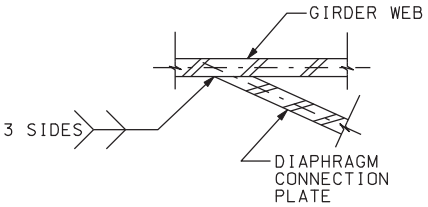


DETAIL A

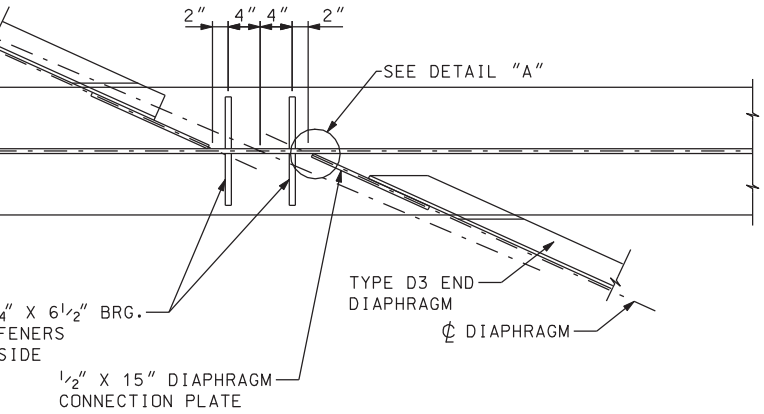


AT BENTS

| NO. | DATE | BY | REMARKS |
|---|---|---|---|
| | | | |

REVISIONS

UTAH DEPARTMENT OF TRANSPORTATION
SALT LAKE CITY, UTAH
STRUCTURES DIVISION

DESIGN JW 11/04 CHECK LJP 12/04
DRAWN JW 12/04 CHECK PBB 12/04
QUANT. CHECK

APPROVAL RECOMM. DATE SENIOR DESIGN ENGR.
APPROVED FOR USE BY UDOT DATE UDOT BRIDGE ENGR.

I-15; CORRIDOR IN UTAH COUNTY
I-15 OVER RAILROAD AT LEHI
GIRDER DETAILS 3

PROJECT NUMBER SP-15-6(52)241

UTAH
COUNTY

C-341W
DRG. NO.

SHT. 19 OF 37

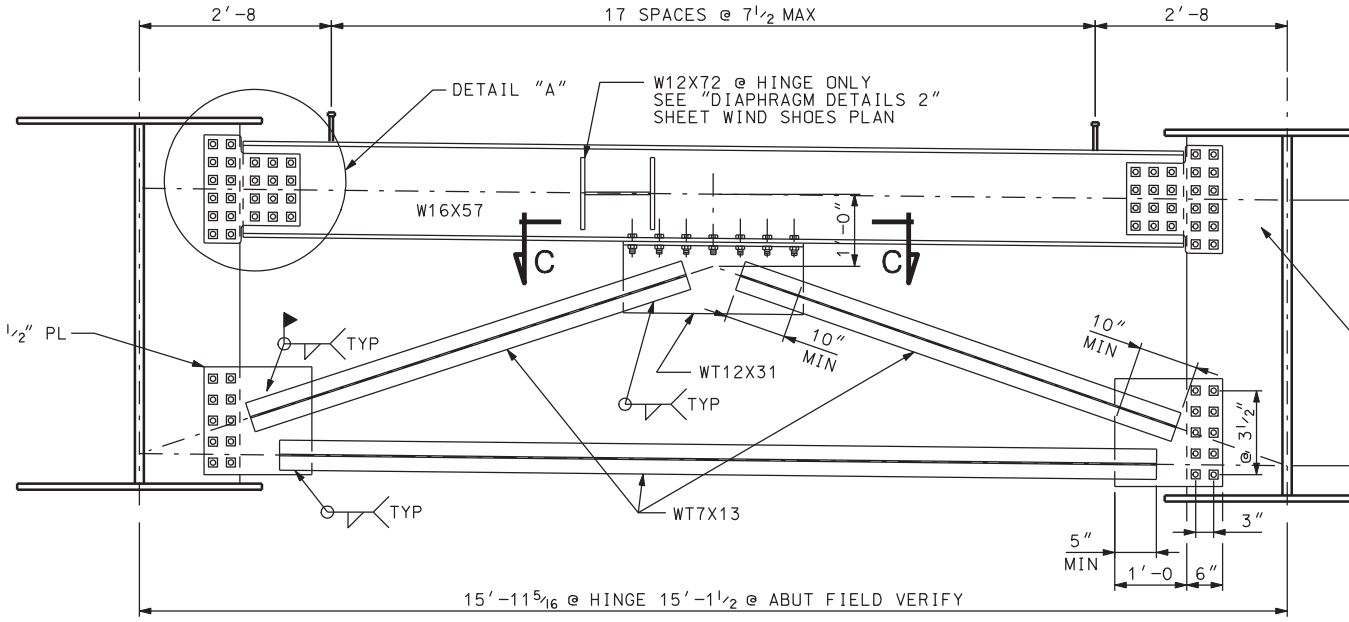


## TYPE DI

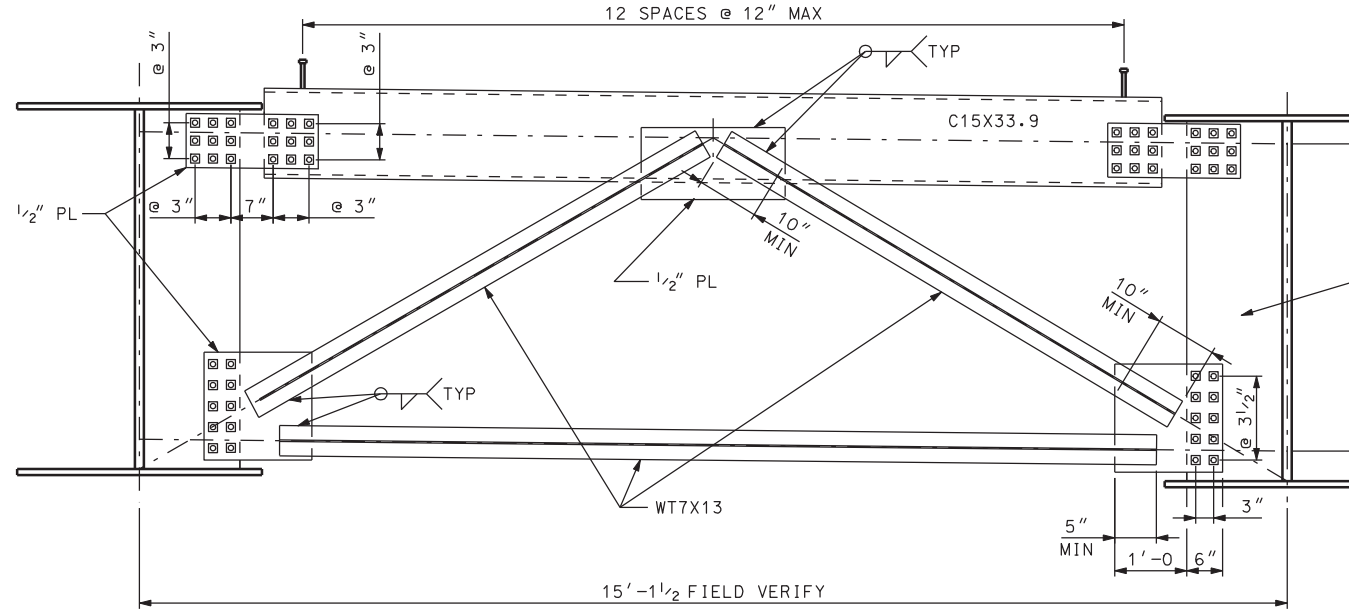


## TYPE D3

## NO

1. SEE "DIAPHRAGM DETAILS 2
   AND SECTION C-C.
2. SEE "DIAPHRAGM DETAILS 2

DGN File:IP_PWPcdns1717\4433_C-341-20_STEEL04.dgn
02-MAY-2005

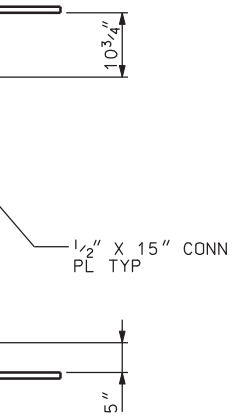


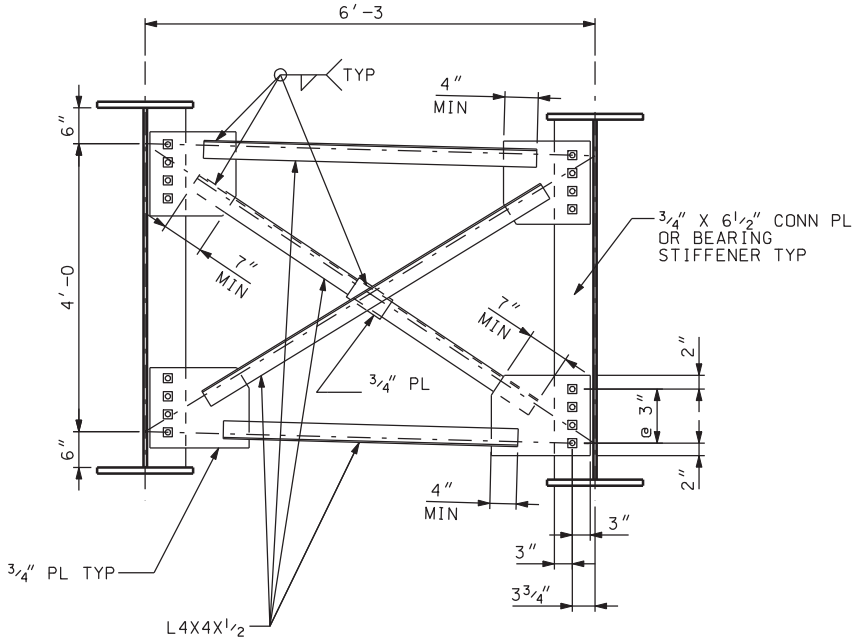


## TYPE D2

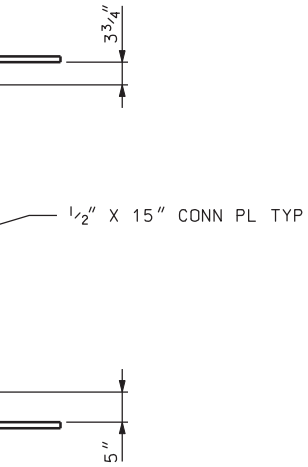


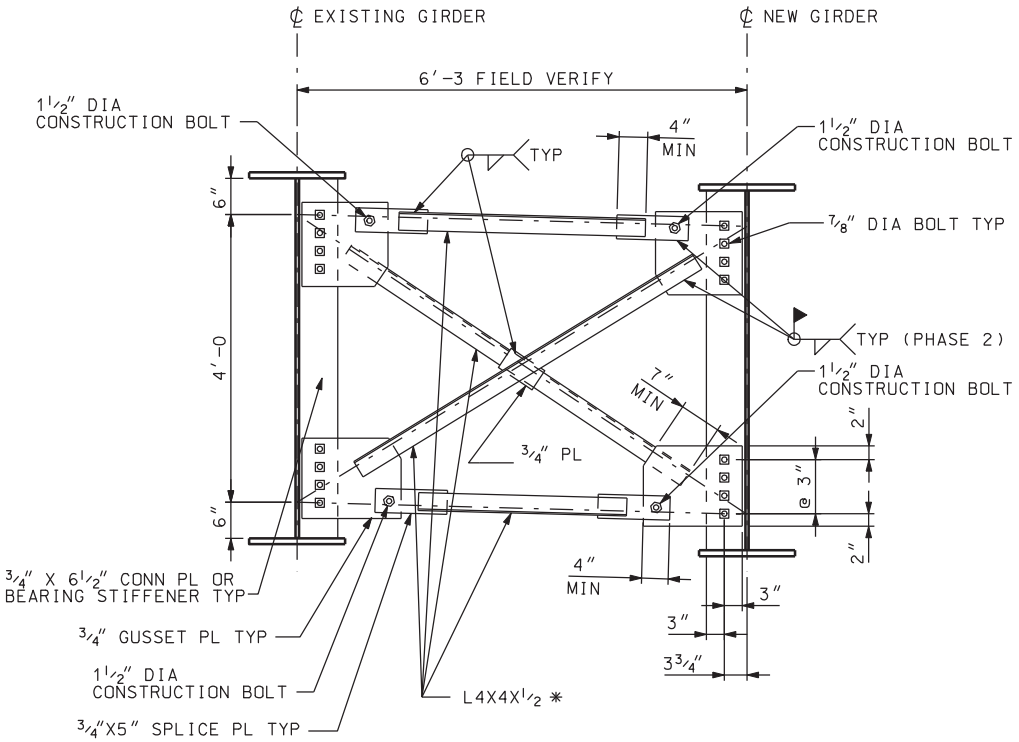


## TYPE D4

* SEE NOTE 2

OTES

" SHEET FOR DETAIL "A"

" SHEET FOR PHASING NOTES.

| NO. | DATE | BY | REMARKS |
|---|---|---|---|

REVISIONS

UTAH DEPARTMENT OF TRANSPORTATION
SALT LAKE CITY, UTAH
STRUCTURES DIVISION

DESIGN JW 11/04 CHECK LJP 12/04
DRAWN JW 12/04 CHECK PBB 12/04
QUANT. CHECK

APPROVAL RECOMM. DATE SENIOR DESIGN ENGR.
APPROVED FOR USE BY UDOT DATE UDOT BRIDGE ENGR.

I-15; CORRIDOR IN UTAH COUNTY
I-15 OVER RAILROAD AT LEHI
DIAPHRAGM DETAILS 1
PROJECT NUMBER SP-15-6(52)241

UTAH
COUNTY

C-341W
DRG. NO.

SHT. 20 OF 37

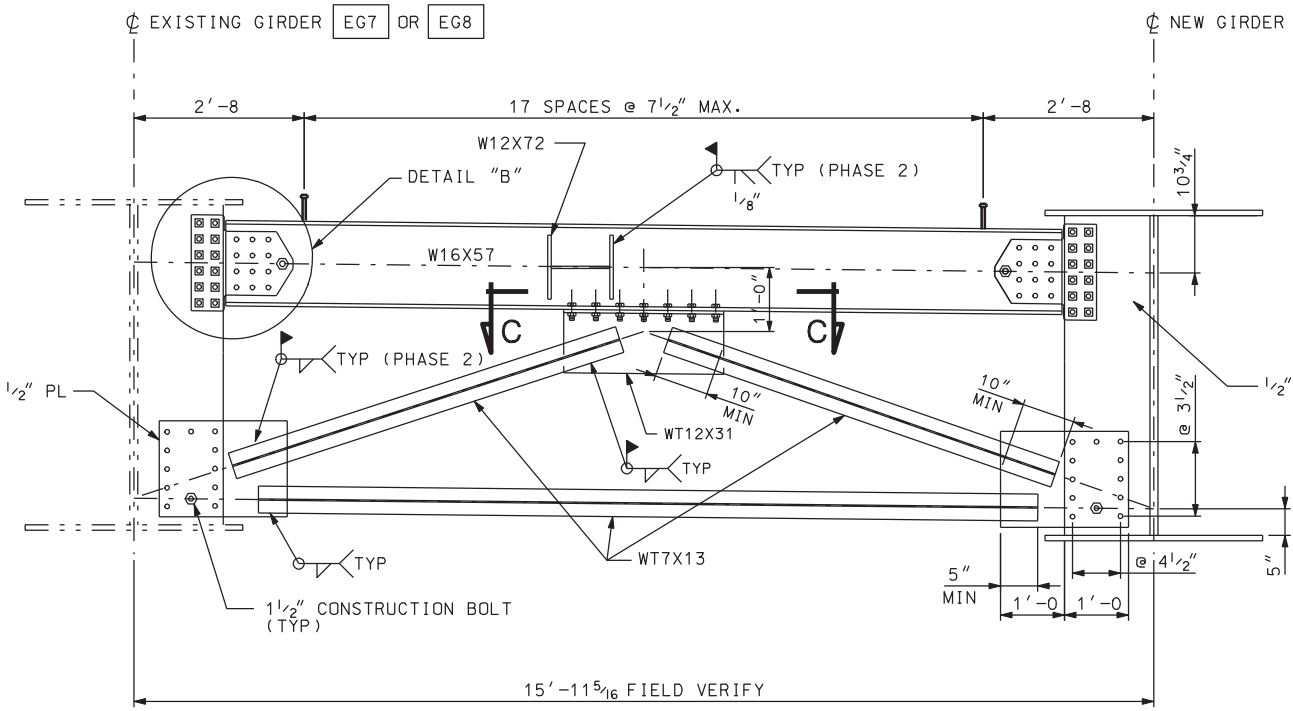


## TYPE D5

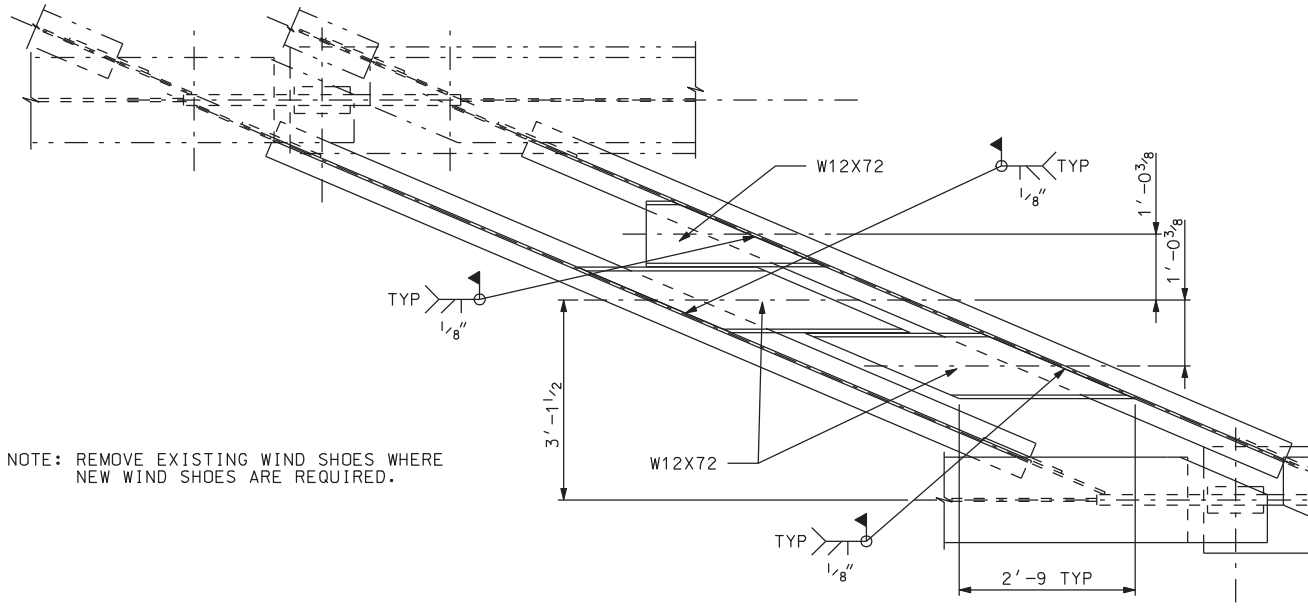


NOTE: REMOVE EXISTING WIND SHOES WHERE NEW WIND SHOES ARE REQUIRED.

## WIND SHOES PLAN

1. PHASE 1
   BEFORE T

   A. ⊡ IN
   TIGHT
   B. ⊚ IN

2. PHASE 2

   A. ○ IN
   AFTER
   B. INSTA
   C. TIGHT
   D. WELD

DGN File:IP_PWPcdms1717\4433_C-341-21_STEEL05.dgn
02-MAY-2005

G1 OR G4

X 15″ CONN. PL TYP

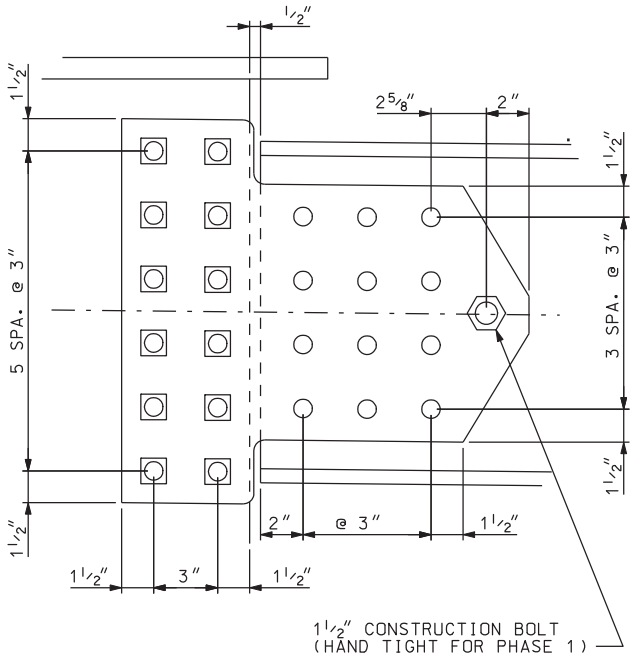


DETAIL "B"

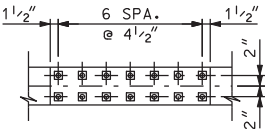


SECTION C-C

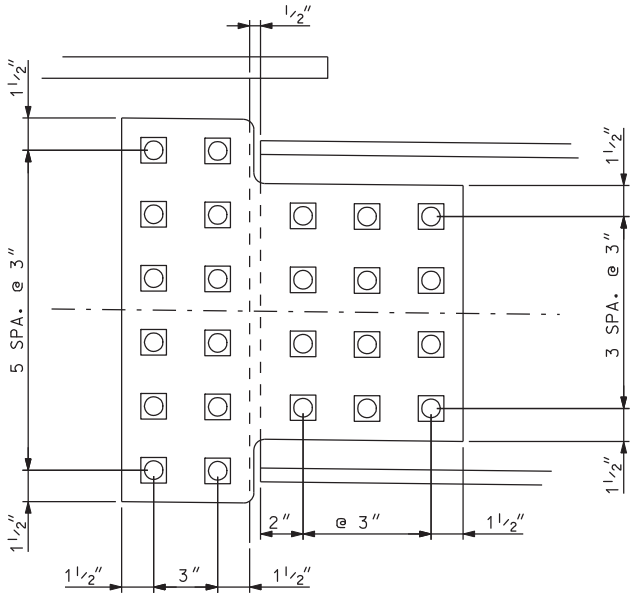


DETAIL "A"

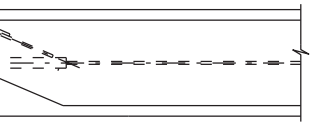

PHASING NOTES

CONSISTS OF GIRDER ERECTION AND CONNECTIONS
THE DECK IS CAST.

NDICATES BOLTS INSTALLED DURING PHASE 1
TENED PER SPECIFICATIONS.
NSTALL CONSTRUCTION BOLTS "HAND TIGHT".

CONSISTS OF CONNECTIONS MADE AFTER DECK IS CAST.

NDICATES BOLTS FIELD DRILLED AND INSTALLED
R DECK IS CAST.
ALL ALL DIAGONAL MEMBERS.
TEN CONSTRUCTION BOLTS TO SPECIFICATIONS.
SPLICE PLATES IN TYPE D4 DIAPHRACIUS.

| NO. | DATE | BY | REMARKS |
|---|---|---|---|

REVISIONS

UTAH DEPARTMENT OF TRANSPORTATION
SALT LAKE CITY, UTAH
STRUCTURES DIVISION

DESIGN JW 11/04 CHECK LJP 12/04
DRAWN JW 12/04 CHECK PBB 12/04
QUANT. CHECK

APPROVAL RECOMM. DATE SENIOR DESIGN ENGR.
APPROVED FOR USE BY UDOT DATE UDOT BRIDGE ENGR.

I-15; CORRIDOR IN UTAH COUNTY
I-15 OVER RAILROAD AT LEHI
DIAPHRAGM DETAILS 2
PROJECT NUMBER SP-15-6(52)241

UTAH
COUNTY

C-341W
DRG. NO.

SHT. 21 OF 37

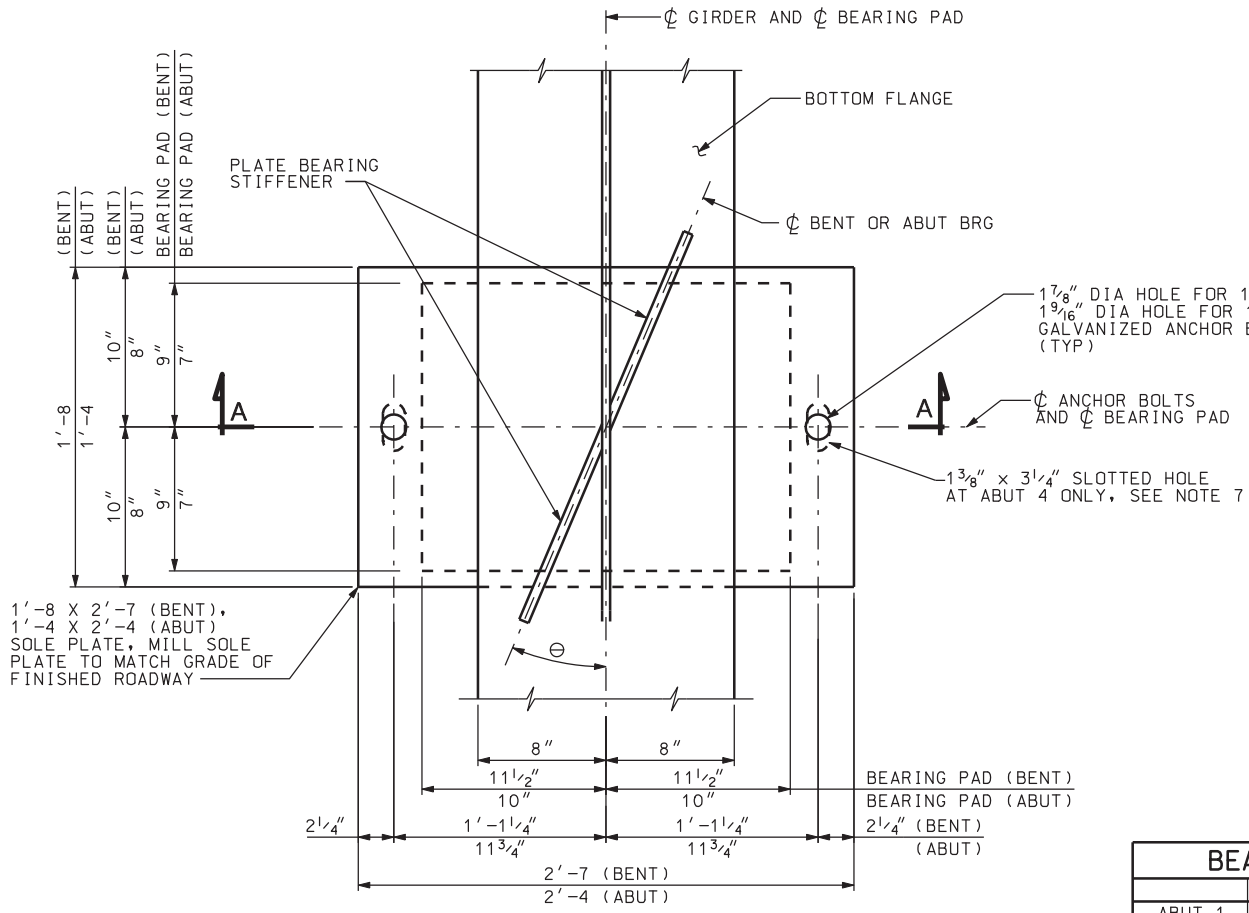


## PLAN

| BEARIN | |
|---|---|
| | |
| ABUT 1 | 22 |
| BENT 2 | 23 |
| BENT 3 | 23 |
| ABUT 4 | 22 |

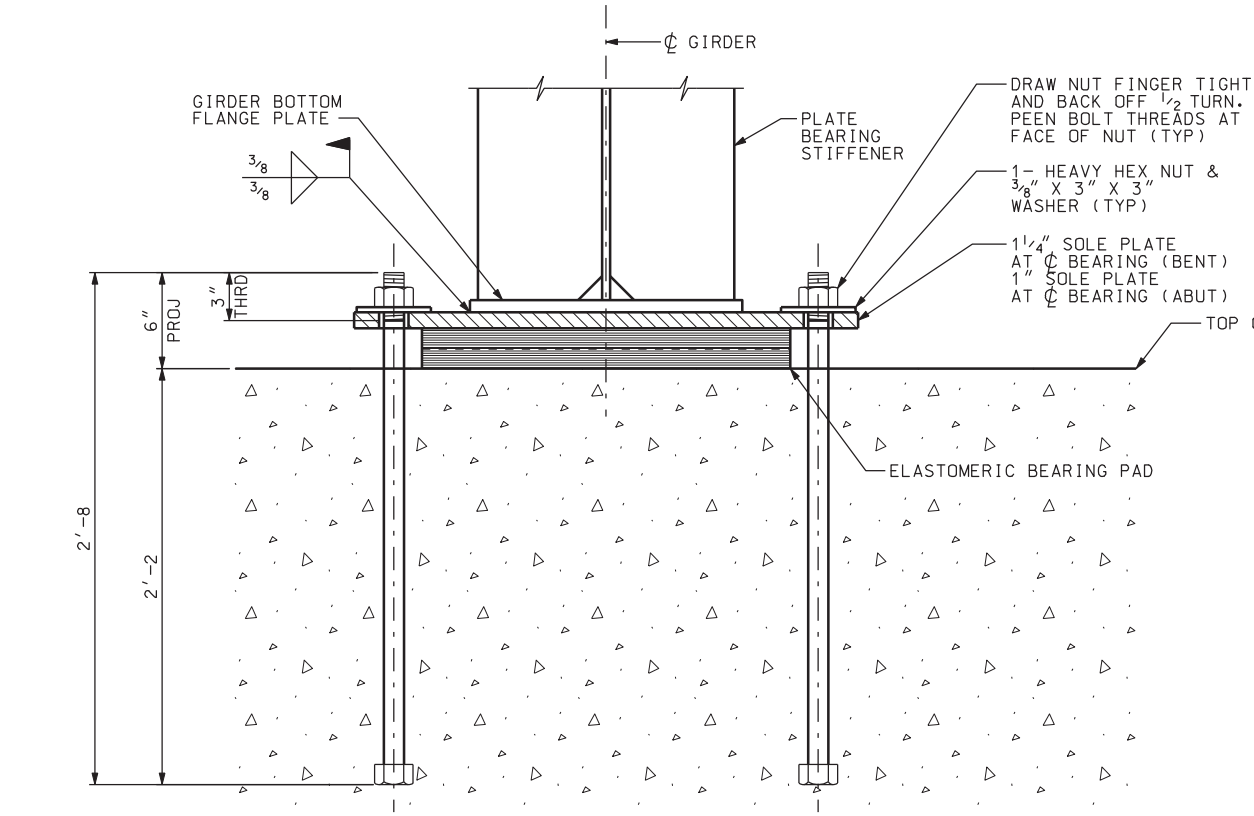


## SECTION A-A

DGN File:IP_PWPcdnsl717\4433_C-341-22_BRNG01.dgn

02-MAY-2005

DIA (BENT)
DIA (ABUT)

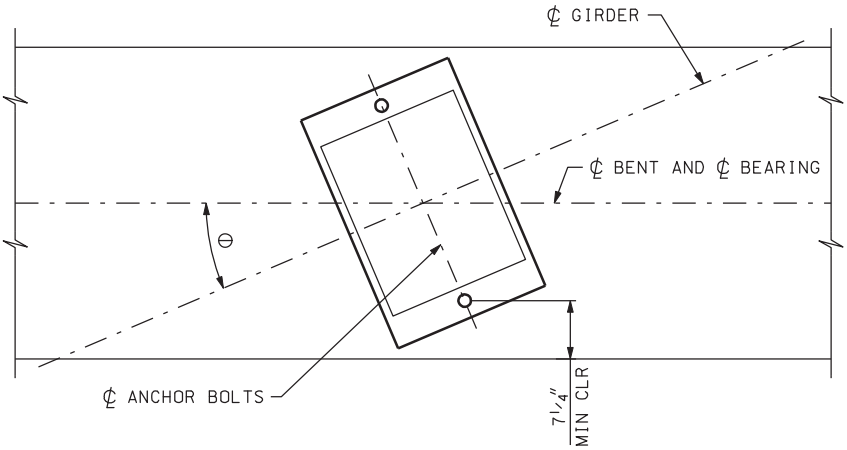


## ANCHOR BOLT LOCATION DIAGRAM (BENT)

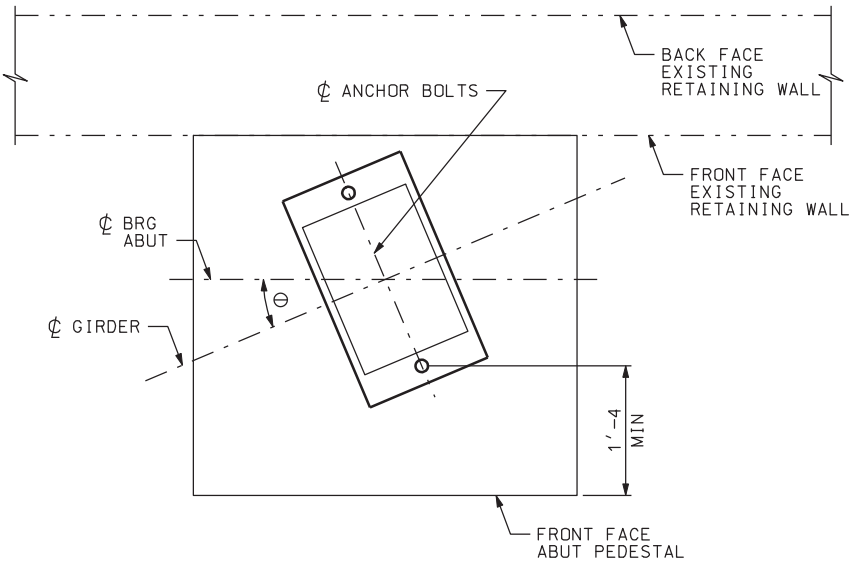


## ANCHOR BOLT LOCATION DIAGRAM (ABUTMENT)

NG DETAILS

| Θ | NO. BRG |
|---|---|
| °56′22″ | 4 |
| °04′52″ | 4 |
| °04′43″ | 4 |
| °57′00″ | 4 |

BEARING SEAT

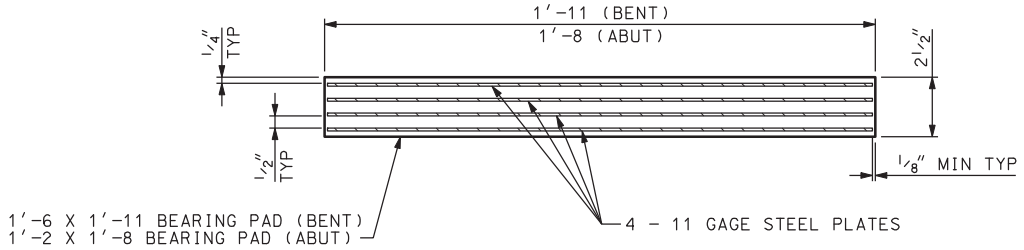


## BEARING PAD DETAIL

## NOTES

1. PAYMENT FOR ANCHOR BOLT AND BEARING ASSEMBLIES IS INCLUDED IN THE CONTRACT PRICE FOR STRUCTURAL STEEL.
2. ELASTOMER FOR BEARING PADS HARDNESS 50.
3. USE ASTM F-1554 GRADE 36 ANCHOR BOLTS.
4. GALVANIZE NUTS, WASHERS, AND ANCHOR BOLTS IN ACCORDANCE WITH AASHTO M232 (ASTM A153). ALL GALVANIZED STEEL THREADS ARE TO BE FREE FROM DEFECTS ALLOWING NUTS TO BE FREE RUNNING BY HAND FOR THE ENTIRE LENGTH OF THREADS.
5. FILL ANCHOR BOLT SOLE PLATE HOLES WITH SILICONE JOINT SEALER.
6. SOLE PLATES SHALL BE BEVELED TO MATCH GRADE OF FINISHED ROADWAY.
7. THE LOCATION OF THE ANCHOR BOLTS IN RELATION TO THE SLOTTED HOLES IN THE SOLE PLATE SHALL CORRESPOND WITH THE TEMPERATURE AT THE TIME OF ERECTION. THE ANCHOR BOLTS SHALL BE CENTERED IN THE SLOTTED HOLES AT 60°F. SEE "EXPANSION JOINT DETAILS" FOR TEMPERATURE ADJUSTMENT.

REVISIONS

| NO. | DATE | BY | REMARKS |
|---|---|---|---|

UTAH DEPARTMENT OF TRANSPORTATION
SALT LAKE CITY, UTAH
STRUCTURES DIVISION

DESIGN KMR 11/04 CHECK KTF 11/04
DRAWN RDF 11/04 CHECK KTF 11/04
QUANT. CHECK

APPROVAL RECOMM. DATE SENIOR DESIGN ENGR.
APPROVED FOR USE BY UDOT DATE UDOT BRIDGE ENGR.

I-15; CORRIDOR IN UTAH COUNTY
I-15 OVER RAILROAD AT LEHI
BEARING DETAILS
PROJECT NUMBER SP-15-6(52)241

UTAH
COUNTY

C-341W
DRG. NO.

SHT. 22 OF 37

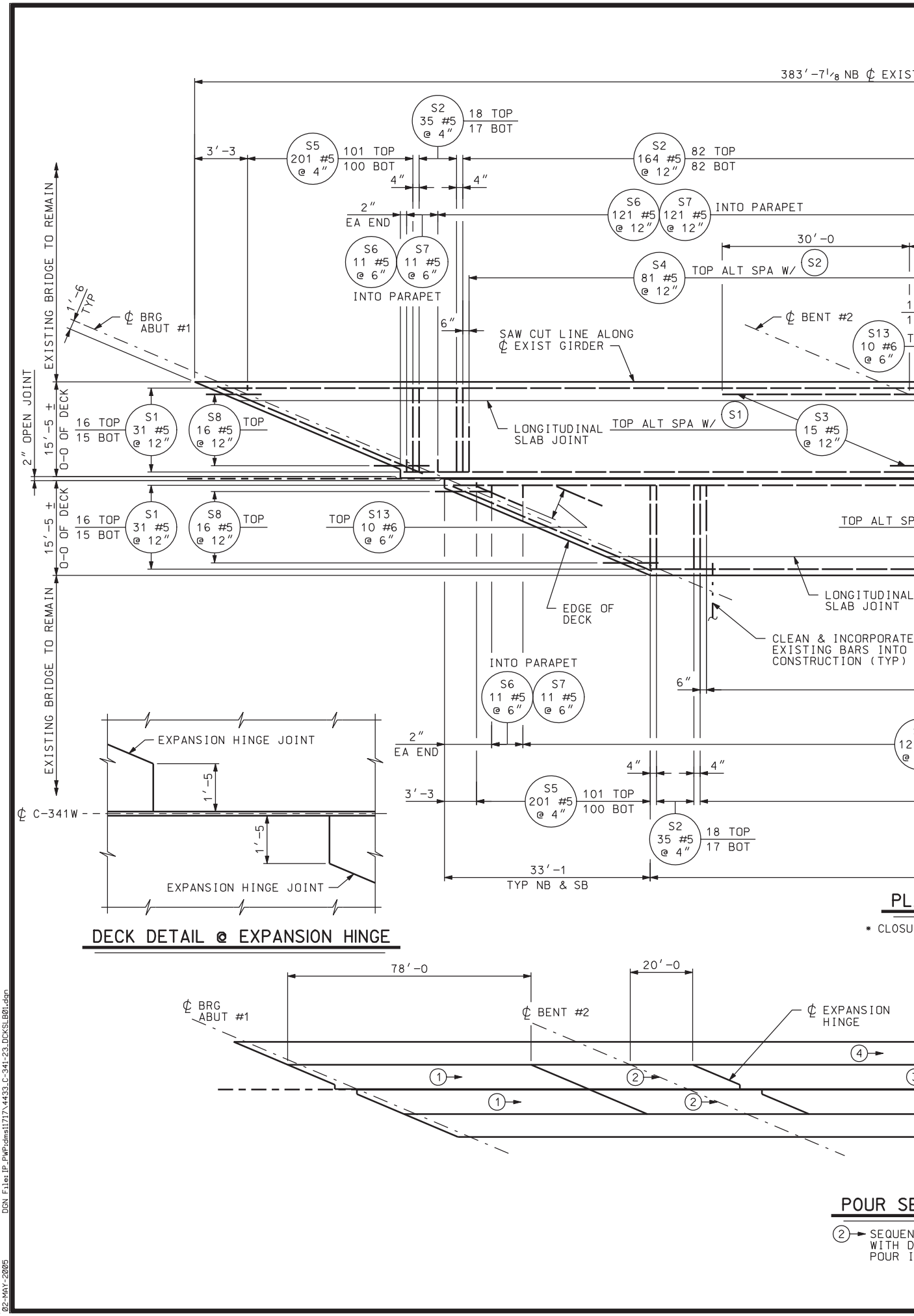


DGN File: IP_PWPcdms1717\4433_C-341-23_DCKSLB01.dgn

02-MAY-2005

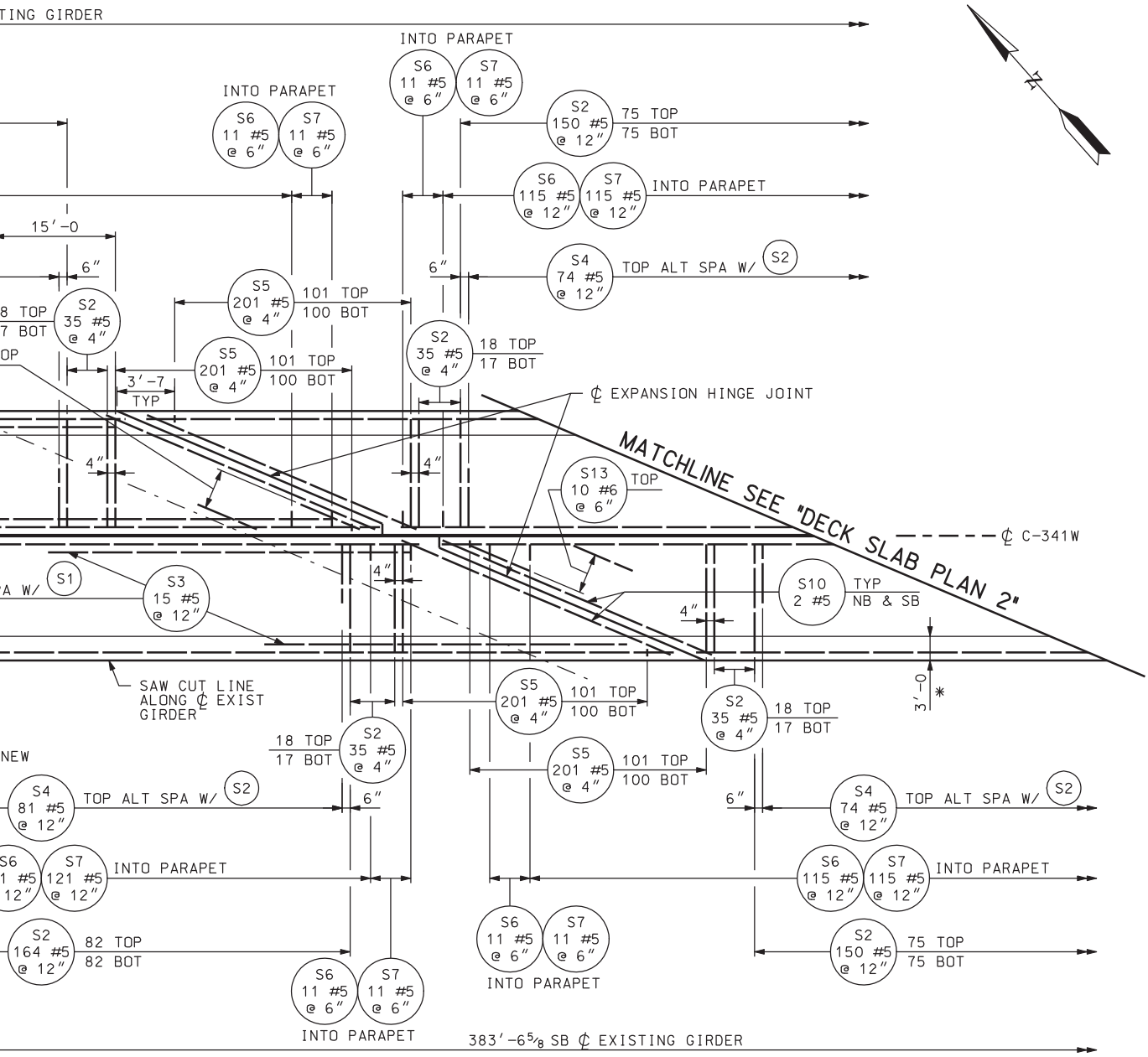


AN

RE POUR

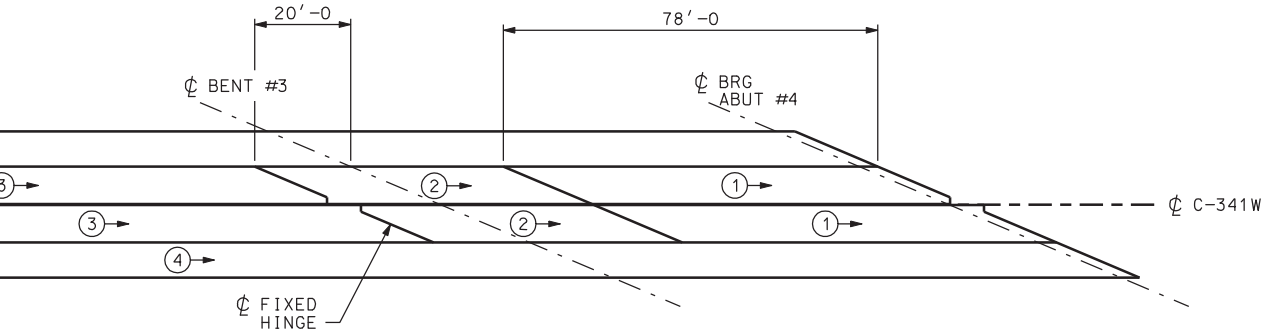


EQUENCE

CE NUMBER
IRECTION OF
NDICATED

NOTE: PLACE DECK IN SECTIONS AND SEQUENCE INDICATED. CONTRACTOR MAY SUBMIT ALTERNATE PROCEDURES INCLUDING THE COMBINING OF POURS (1) AND (2) FOR APPROVAL BY ENGINEER.

| QUANTITIES STRUCTURAL CONCRETE | |
|---|---|
| DECK NB & SB | 340.7 CY |

| NO. | DATE | BY | REMARKS |
|---|---|---|---|
| | | | |

REVISIONS

UTAH DEPARTMENT OF TRANSPORTATION
SALT LAKE CITY, UTAH
STRUCTURES DIVISION

DESIGN KMR 12/04 CHECK KTF 12/04
DRAWN RDF 12/04 CHECK KTF 12/04
QUANT. KMR 12/04 CHECK KTF 12/04

APPROVAL RECOMM. DATE SENIOR DESIGN ENGR.
APPROVED FOR USE BY UDOT DATE UDOT BRIDGE ENGR.

I-15: CORRIDOR IN UTAH COUNTY
I-15 OVER RAILROAD AT LEHI
DECK SLAB PLAN 1

PROJECT NUMBER SP-15-6(52)241

UTAH
COUNTY

C-341W
DRG. NO.

SHT. 23 OF 37

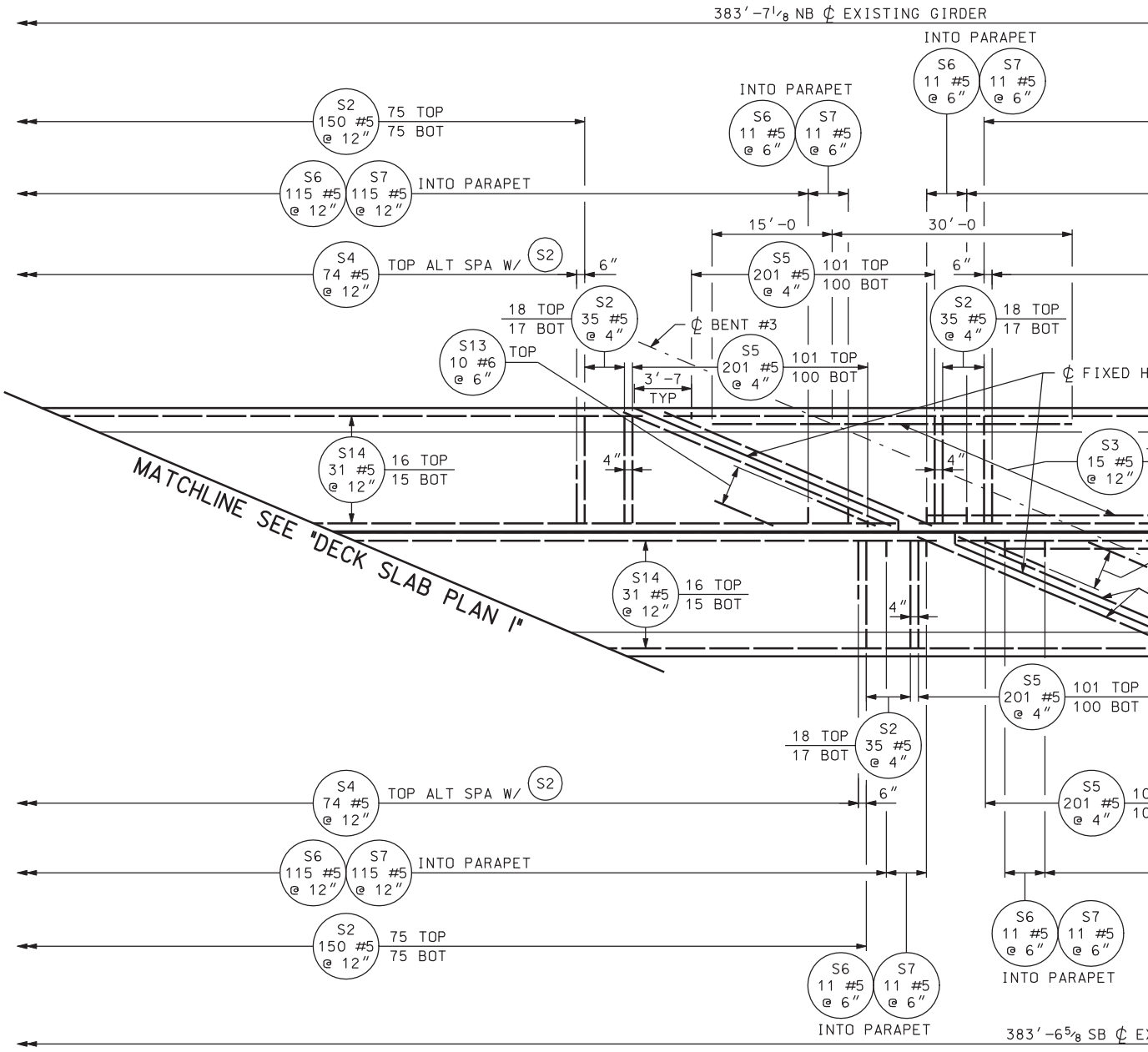


PLA

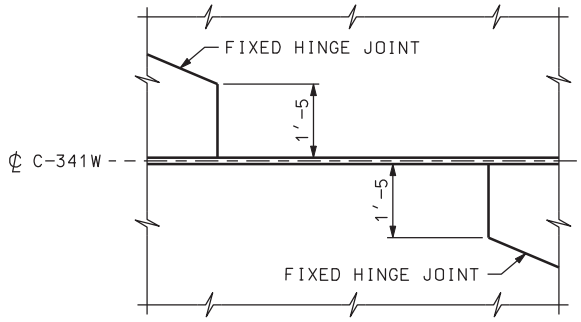


DECK DETAIL @ FIXED HINGE

DGN File:IP_PWPcdms1717\4433_C-341-24_DCKSLB02.dgn

02-MAY-2005

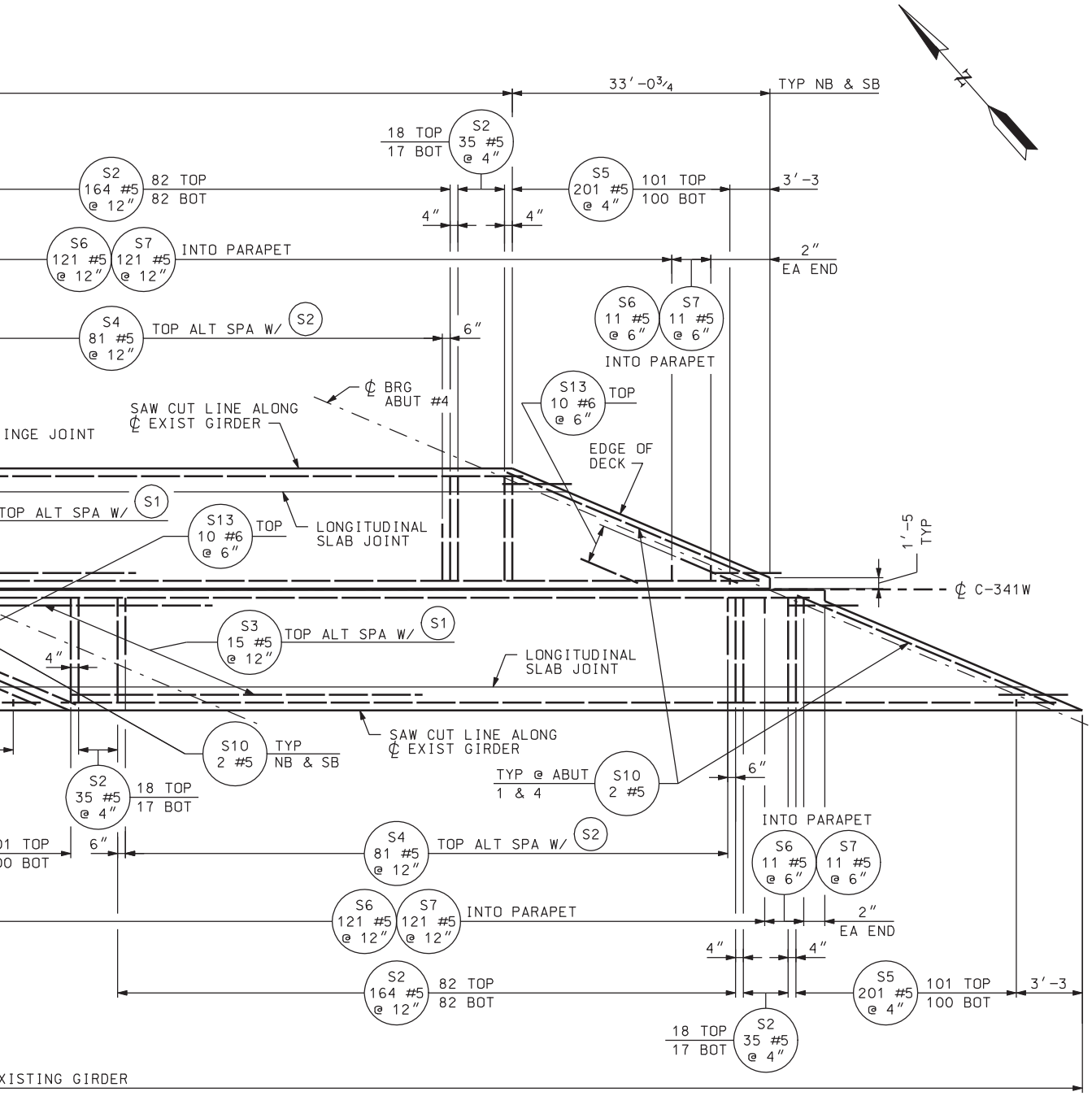


AN

## NOTES

1. SEE "DECK SECTIONS" FOR ADDITIONAL REINFORCEMENT.
2. SEE "PARAPET DETAILS" FOR PARAPET REINFORCEMENT.
3. MINIMUM LAP LENGTH FOR (S1) BARS: #5 BAR 2′-6. STAGGER SPLICES SUCH THAT NO MORE THAN 50% OF (S1) BARS ARE SPLICED AT A GIVEN LOCATION (TAKEN NORMAL TO ℄ C-341W).
4. STAGGER (S1), (S2) AND (S5) BARS SUCH THAT THE TOP BARS ARE OFFSET 6″ FROM BOTTOM BARS.
5. FOR DECK CONCRETE QUANTITY SEE "DECK SLAB PLAN 1".
6. SEE "APPROACH SLAB PLAN" SHEET FOR CORNER REINFORCING DETAIL.
7. STAY-IN-PLACE FORMS ARE NOT PERMITTED.

| NO. | DATE | BY | REMARKS |
|---|---|---|---|

REVISIONS

UTAH DEPARTMENT OF TRANSPORTATION
SALT LAKE CITY, UTAH
STRUCTURES DIVISION

DESIGN KMR 12/04 CHECK KTF 12/04
DRAWN RDF 12/04 CHECK KTF 12/04
QUANT. KMR 12/04 CHECK KTF 12/04

APPROVAL RECOMM. DATE SENIOR DESIGN ENGR.
APPROVED FOR USE BY UDOT DATE UDOT BRIDGE ENGR.

I-15; CORRIDOR IN UTAH COUNTY
I-15 OVER RAILROAD AT LEHI
DECK SLAB PLAN 2

PROJECT NUMBER SP-15-6(52)241

UTAH
COUNTY

C-341W
DRG. NO.

SHT. 24 OF 37

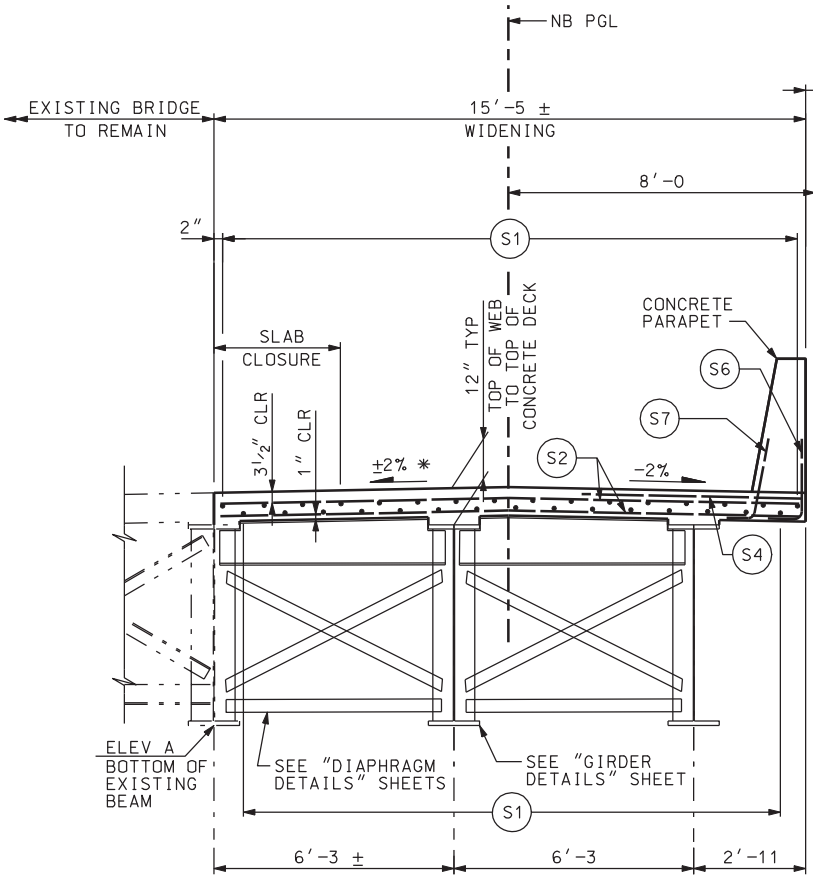


HALF SECTION AT BENTS 2 & 3

## NOTES

1. FOR INTERMEDIATE DIAPHRAGM, SEE "DIAPHRAGM DETAILS" SHEETS.

## TYPICAL CRO

* VERIFY EXISTI

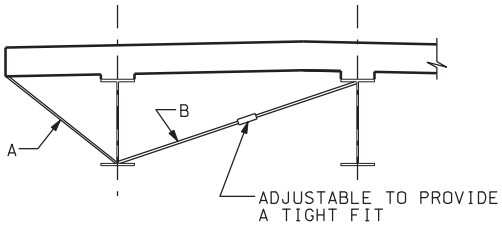


BRACE DECK OVERHANGS DURING PLACEMENT OF DECK AS SHOWN. ENSURE THAT MEMBER "B" IS CAPABLE OF DEVELOPING THE FORCES INDUCED BY MEMBER "A". SHOP DRAWINGS ARE REQUIRED.

## SECTION AT SLAB OVERHANG

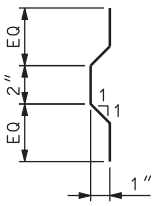


## KEY DETAIL

| TABULATED | |
|---|---|
| | E |
| BENT #2N | 45 |
| BENT #2S | 45 |

FIELD VERIFY THE EXISTING
ADJACENT TO THE WIDENED F
CONTACT THE ENGINEER IF T
THE SURVEYED AND DETAILED
THE ELEVATIONS SHOWN ARE
AT THE NORTH (N) OR SOUTH

DGN File:IP_PWPcdns1717\4433_C-341-25-DECK01.dgn
02-MAY-2005

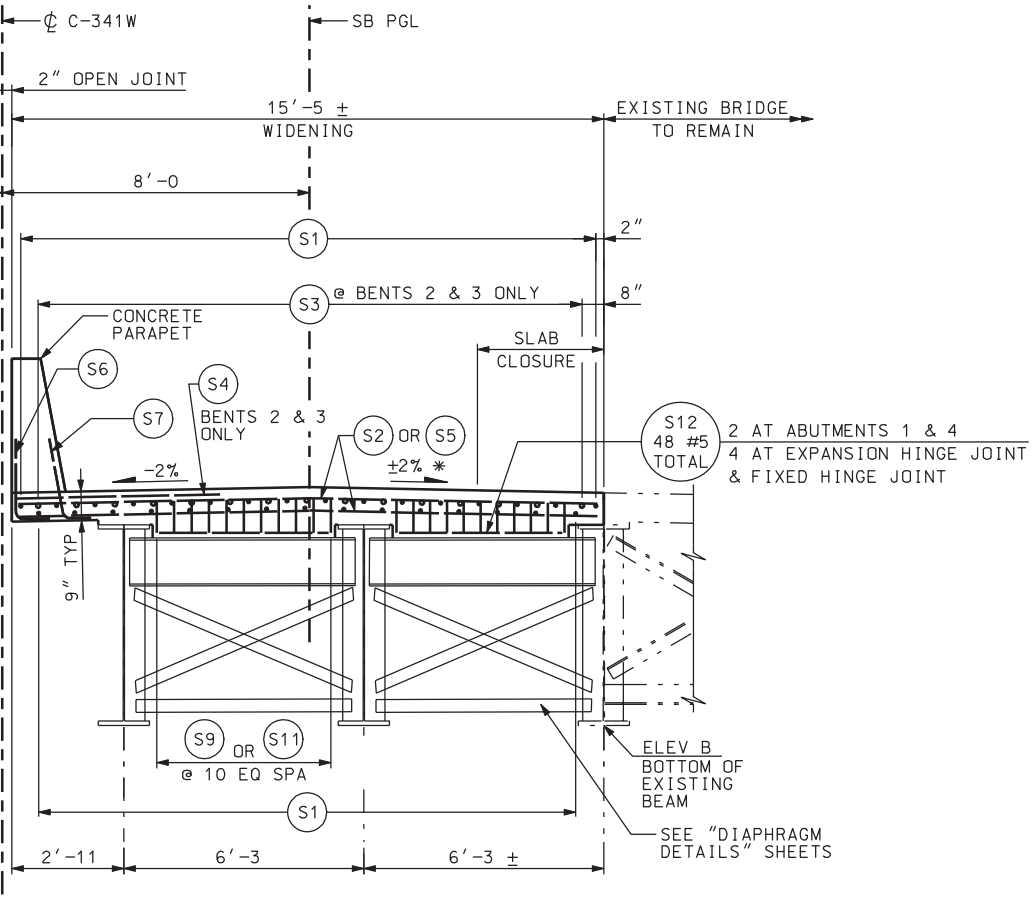


HALF SECTION AT HINGES, ABUTMENTS

## OSS SECTION

ING CROSS SLOPE

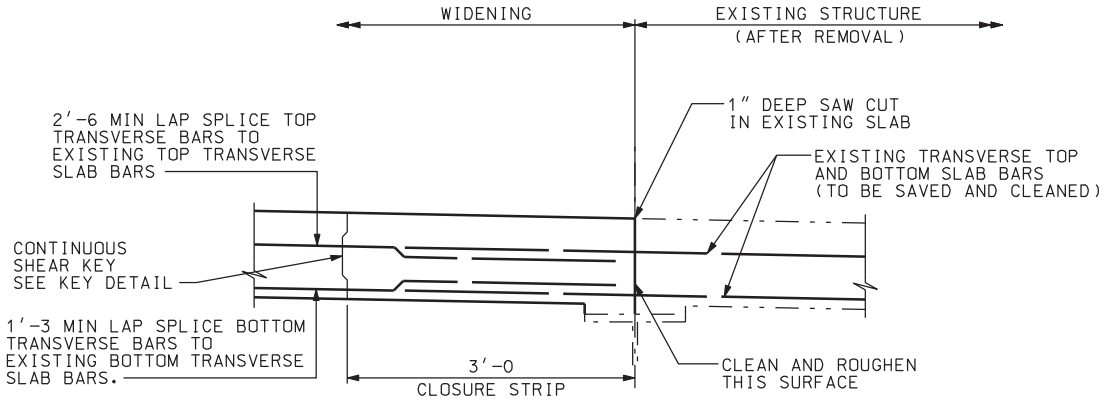


## SLAB CLOSURE

| ELEVATIONS | |
|---|---|
| LEV A | ELEV B |
| 569.16 | 4570.33 |
| 569.03 | 4570.27 |

S BOTTOM OF BEAM ELEVATIONS
PORTIONS OF THE STRUCTURE.
THE DISCREPANCY BETWEEN
D ELEVATIONS EXCEEDS 1".
BASED ON SURVEYED ELEVATIONS
(S) FACE OF THE BENT CAP.

| NO. | DATE | BY | REMARKS |
|---|---|---|---|

REVISIONS

UTAH DEPARTMENT OF TRANSPORTATION
SALT LAKE CITY, UTAH
STRUCTURES DIVISION

DESIGN KMR 10/04 CHECK KTF 10/04
DRAWN RDF 10/04 CHECK KTF 10/04
QUANT. CHECK

APPROVAL RECOMM. DATE SENIOR DESIGN ENGR.
APPROVED FOR USE BY UDOT DATE UDOT BRIDGE ENGR.

I-15; CORRIDOR IN UTAH COUNTY
I-15 OVER RAILROAD AT LEHI
DECK SECTIONS 1
PROJECT NUMBER SP-15-6(52)241

UTAH
COUNTY

C-341W
DRG. NO.

SHT. 25 OF 37

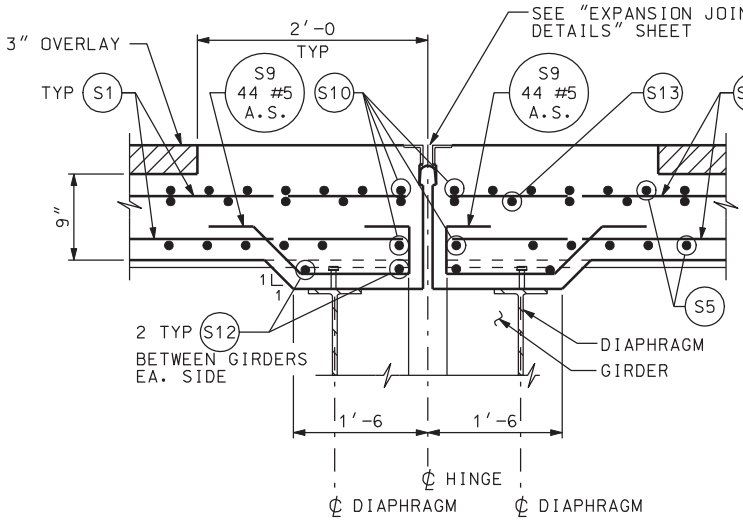


## HINGE JOINT

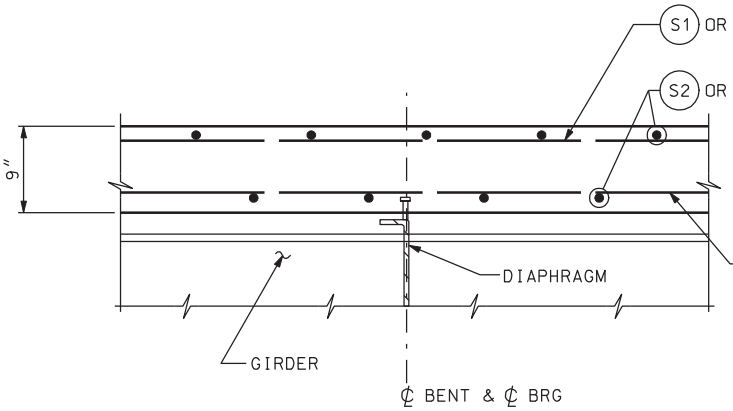


## CONTINUOUS BEARING

BENTS 2 & 3

NT

S14 TYP

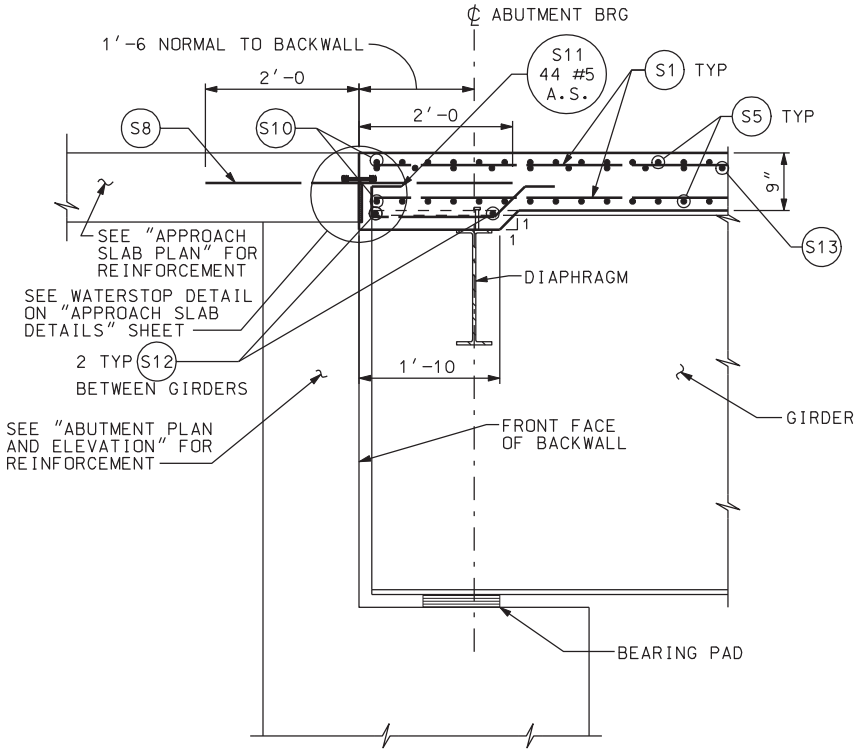


## ABUTMENT 1 SECTION THRU END DIAPHARGM

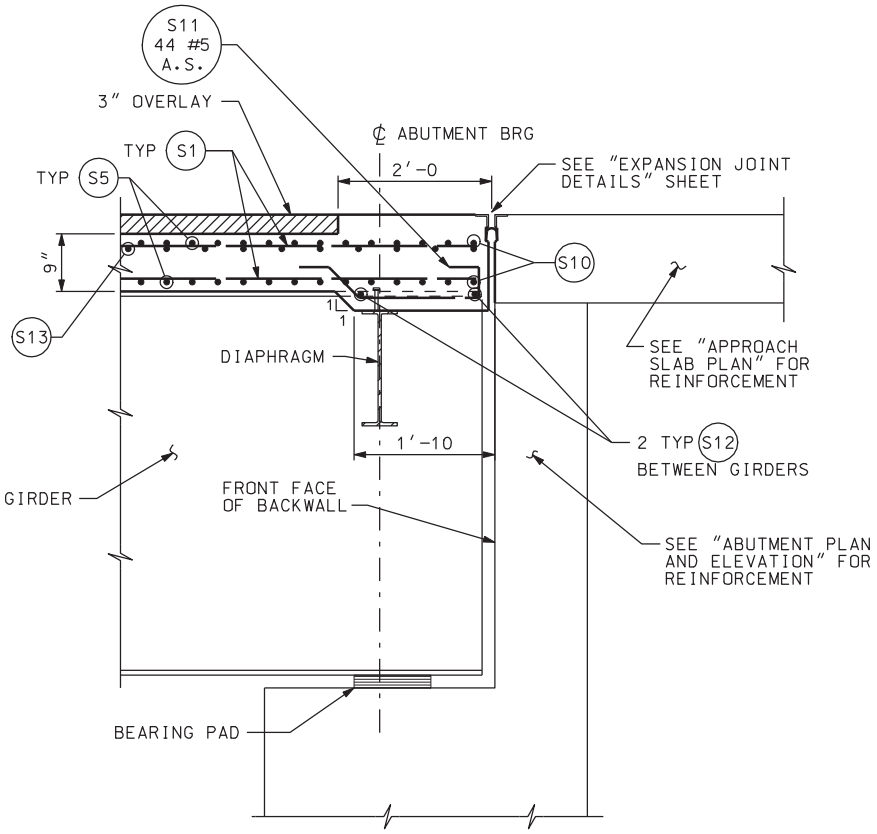


## ABUTMENT 4 SECTION THRU END DIAPHARGM

S3

S5 TYP

S1

| NO. | DATE | BY | REMARKS |
|---|---|---|---|
| | | | |

REVISIONS

UTAH DEPARTMENT OF TRANSPORTATION
SALT LAKE CITY, UTAH
STRUCTURES DIVISION

DESIGN KMR 10/04 CHECK KTF 10/04
DRAWN RDF 10/04 CHECK KTF 10/04
QUANT. CHECK

APPROVAL RECOMM. DATE SENIOR DESIGN ENGR.
APPROVED FOR USE BY UDOT DATE UDOT BRIDGE ENGR.

I-15; CORRIDOR IN UTAH COUNTY
I-15 OVER RAILROAD AT LEHI
DECK SECTIONS 2

PROJECT NUMBER SP-15-6(52)241

UTAH
COUNTY

C-341W
DRG. NO.

SHT. 26 OF 37

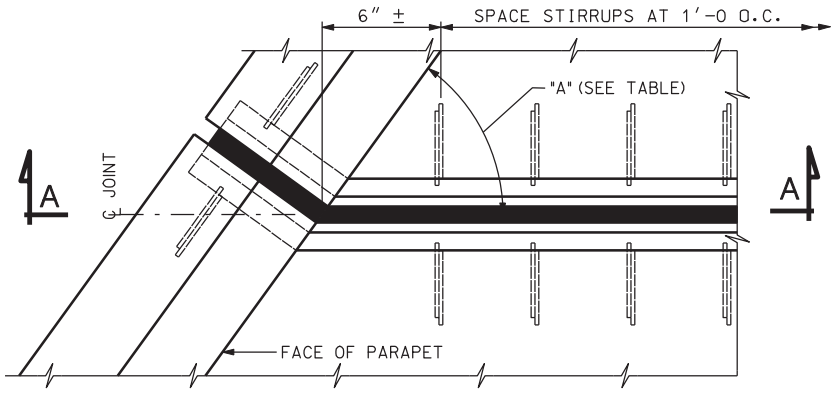


PLAN VIEW OF EXPANSION JOINT

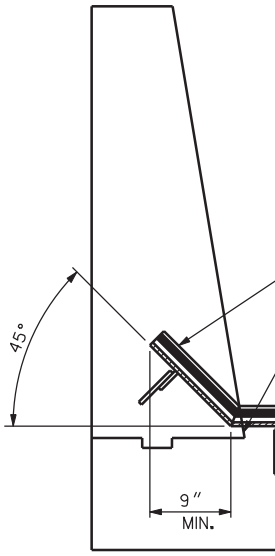


SECTION

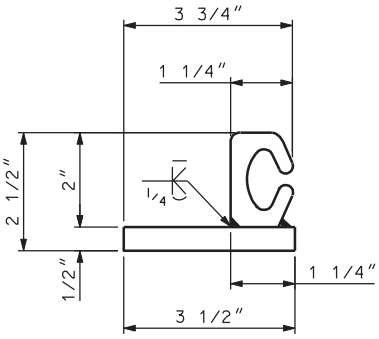


D.S. BROWN STRIP SEAL SYSTEM
(USE A2 SERIES SEAL ELEMENT)

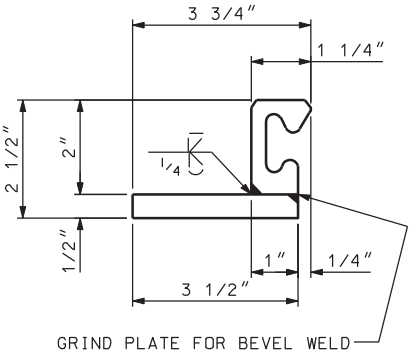


STRUCTURAL ACCESSORIES STRIP SEAL SYSTEM
(USE ONFLEX SEQ SERIES SEAL ELEMENT)

WABO ST
(USE SE S

ALTERNATES FOR STEEL EXTRUSION SYSTEMS

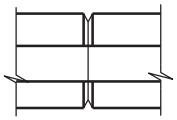

LEFT ELEVATION

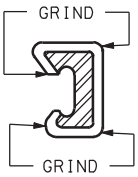


TYPICAL SECTION

RIGHT ELEVATION

STEEL EXTRUSION SPLICE DETAIL

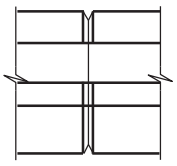

LEFT ELEVATION

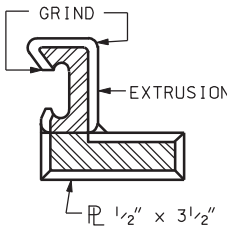


TYPICAL SECTION

SPLICE STEEL EXTRUSION RAILS, SPLICE
THEN WELD RAIL TO PLATE.

STEEL EXTRUSION R

PLATE SPLICE D

DGN File:IP_PWPcdms1717\4433_C-341-27_EXPJT01.dgn
02-MAY-2005

| "A" | LOCATION | RATED CAPACITY | JOINT WIDTH (IN.) | | | | | | |
|---|---|---|---|---|---|---|---|---|---|
| | | | 30°F | 40°F | 50°F | 60°F | 70°F | 80°F | 90°F |
| 23°04'52" | EXPANSION HINGE | 5" | 2 3/16" | 2 1/8" | 2 1/16" | 2" | 1 15/16" | 1 7/8" | 1 13/16" |
| 23°04'52" | FIXED HINGE | 2" | 1/2" | 1/2" | 1/2" | 1/2" | 1/2" | 1/2" | 1/2" |
| 22°57'00" | ABUT #4 | 4 1/2" | 2 3/32" | 2 1/16" | 2 1/32" | 2" | 1 31/32" | 1 15/16" | 1 29/32" |

SEE NOTE 7

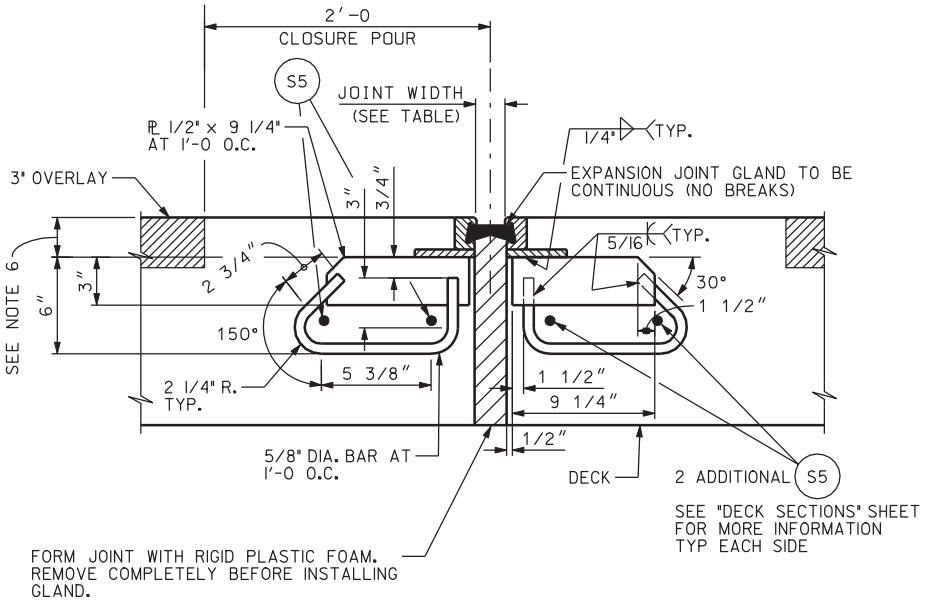


## TYPICAL JOINT SECTION

PLACE JOINT GLAND BEFORE
PLACING PARAPET CONCRETE.

CONSTRUCTION JOINT

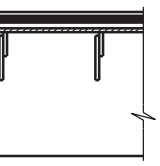

## A-A

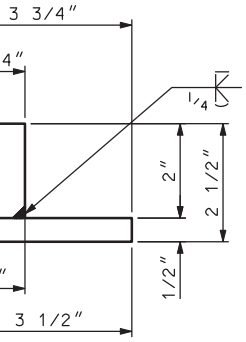


TRIP SEAL SYSTEM
ERIES SEAL ELEMENT)

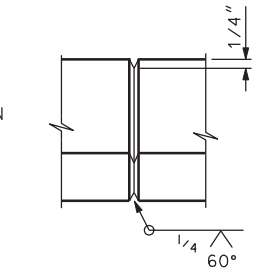


## RIGHT ELEVATION

1/2" x 3 1/2" PLATES.

AIL AND
DETAIL

## NOTES

1. PROVIDE NEW EXTRUSION TO MATCH THE EXISTING EXPANSION JOINT EXTRUSION.
2. PLACE EXPANSION JOINT GLAND PRIOR TO PLACING PARAPET CONCRETE. REPLACE THE EXISTING JOINT GLAND WITH THE NEW GLAND IN ONE PIECE (FULL WIDTH).
3. HOT-DIP GALVANIZE OR EPOXY COAT THE COMPLETE EXPANSION SYSTEM AFTER FABRICATION IN ACCORDANCE WITH AASHTO M 111 OR AASHTO M 284M, RESPECTIVELY. NO WARPING IS ACCEPTABLE IN THE PROCESS OF COATING BY EITHER METHOD.
4. EXTEND EXTRUSION INTO PARAPET 1" BEFORE EACH UPTURN.
5. SEE "PARAPET DETAILS" SHEET AND "DECK SLAB PLAN" SHEET FOR REINFORCING STEEL IN PARAPETS AND DECK.
6. MATCH SETTING DEPTH OF EXPANSION JOINT WITH THE EXISTING EXPANSION JOINT.
7. THESE TABULATED JOINT WIDTHS ARE PREDICTED. SET ACTUAL JOINT WIDTH TO MATCH THE OPENING ON THE ADJACENT EXISTING EXPANSION JOINT.

| QUANTITIES | | |
|---|---|---|
| EXPANSION JOINT | 221 | FEET |
| EXPANSION JOINT GLAND REPLACEMENT | 934 | FEET |

| NO. | DATE | BY | REMARKS |
|---|---|---|---|
| | | | |

REVISIONS

UTAH DEPARTMENT OF TRANSPORTATION
SALT LAKE CITY, UTAH
STRUCTURES DIVISION

DESIGN PBB 10/04 CHECK JAR 10/04
DRAWN RDF 10/04 CHECK PBB 10/04
QUANT. PBB 10/04 CHECK JAR 10/04

APPROVAL RECOMM. DATE SENIOR DESIGN ENGR.
APPROVED FOR USE BY UDOT DATE UDOT BRIDGE ENGR.

I-15; CORRIDOR IN UTAH COUNTY
I-15 OVER RAILROAD AT LEHI
EXPANSION JOINT DETAILS

PROJECT NUMBER SP-15-6(52)241

UTAH
COUNTY

C-341W
DRG. NO.

SHT. 27 OF 37

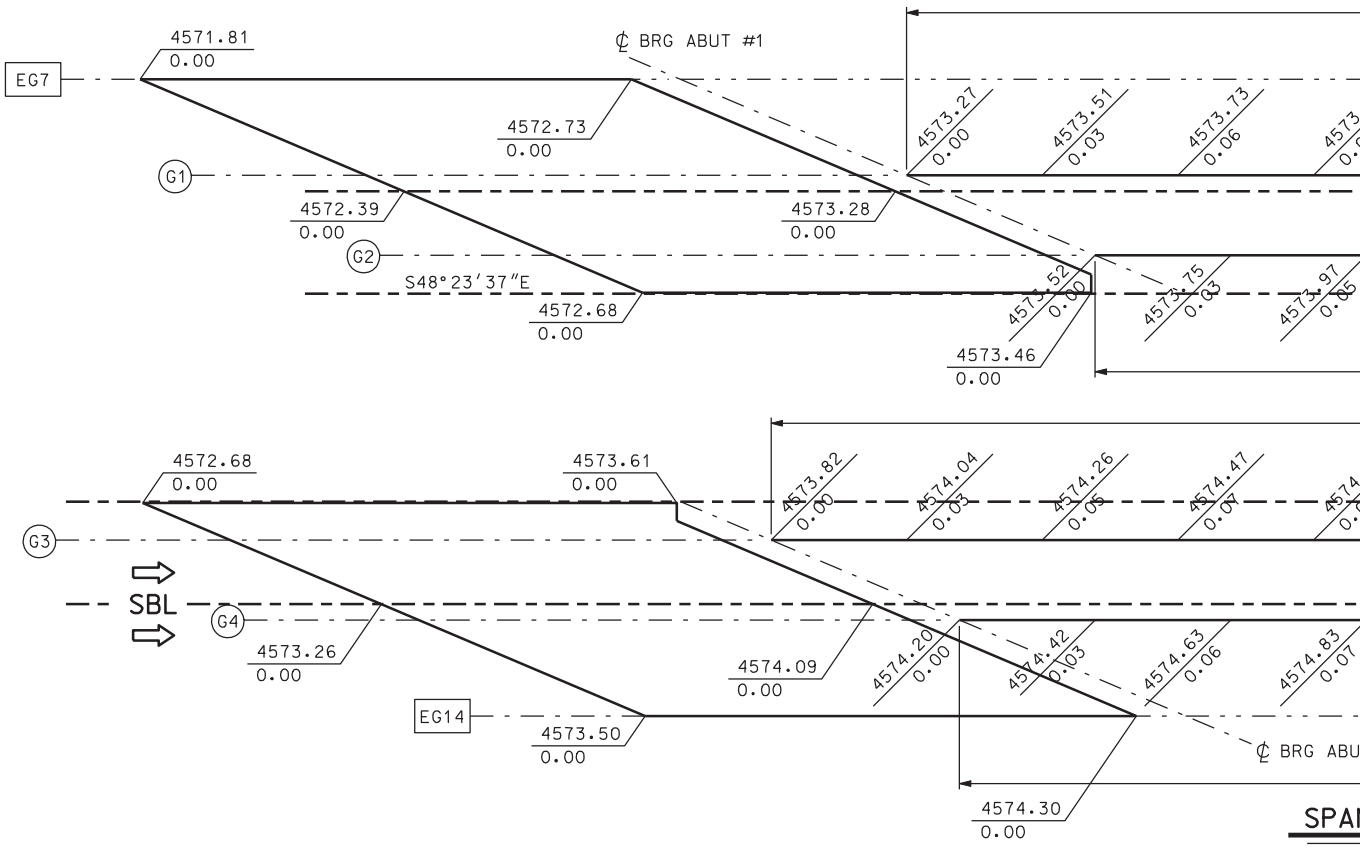


SCREED EL

SEE "SCREED ELEVAT

DGN File:IP_PWPcdnsl717\4433_C-341-28_SCREED01.dgn

02-MAY-2005

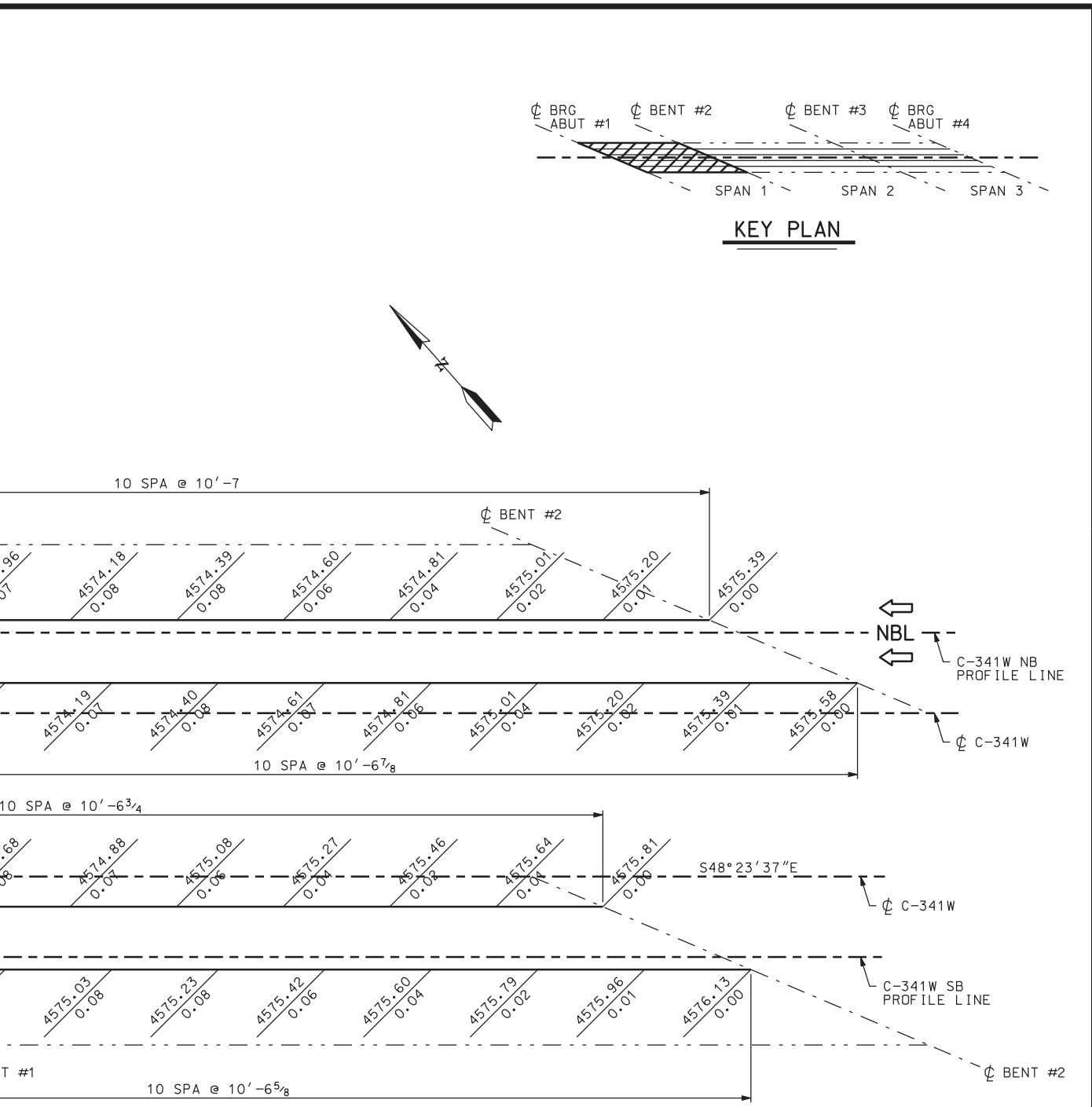


N I

LEVATIONS

IONS 2″ FOR NOTES

| NO. | DATE | BY | REMARKS |
|---|---|---|---|
| | | | |

REVISIONS

UTAH DEPARTMENT OF TRANSPORTATION
SALT LAKE CITY, UTAH
STRUCTURES DIVISION

DESIGN JAR 11/04 CHECK KMR 11/04
DRAWN RDF 12/04 CHECK KMR 12/04
QUANT. CHECK

APPROVAL RECOMM. DATE SENIOR DESIGN ENGR.
APPROVED FOR USE BY UDOT DATE UDOT BRIDGE ENGR.

I-15; CORRIDOR IN UTAH COUNTY
I-15 OVER RAILROAD AT LEHI
SCREED ELEVATIONS 1
PROJECT NUMBER SP-15-6(52)241

UTAH
COUNTY

C-341W
DRG. NO.

SHT. 28 OF 37

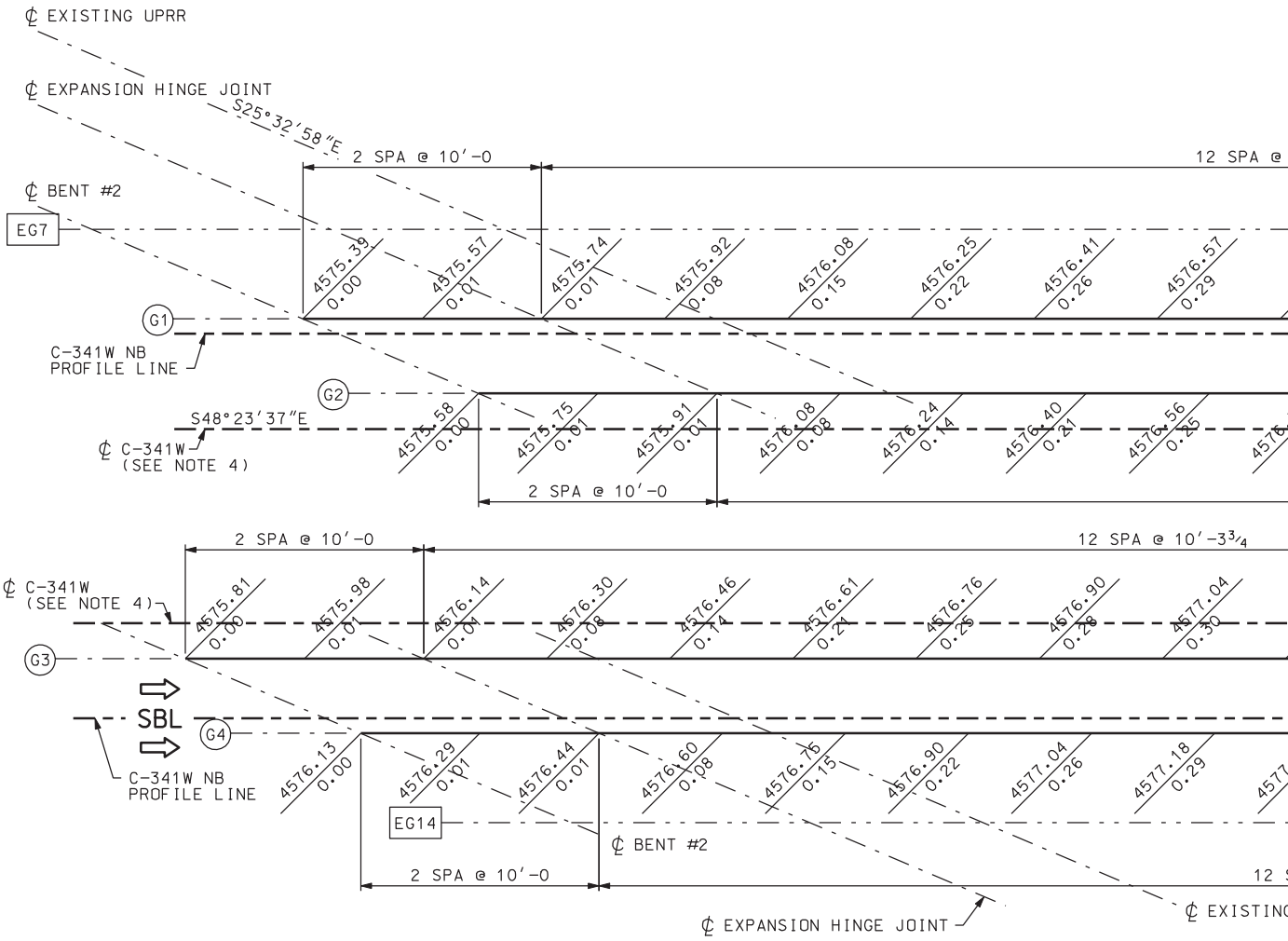


SCREE

DGN File:IP_PWPcdms1717\4433_C-341-29_SCREED02.dgn

02-MAY-2005

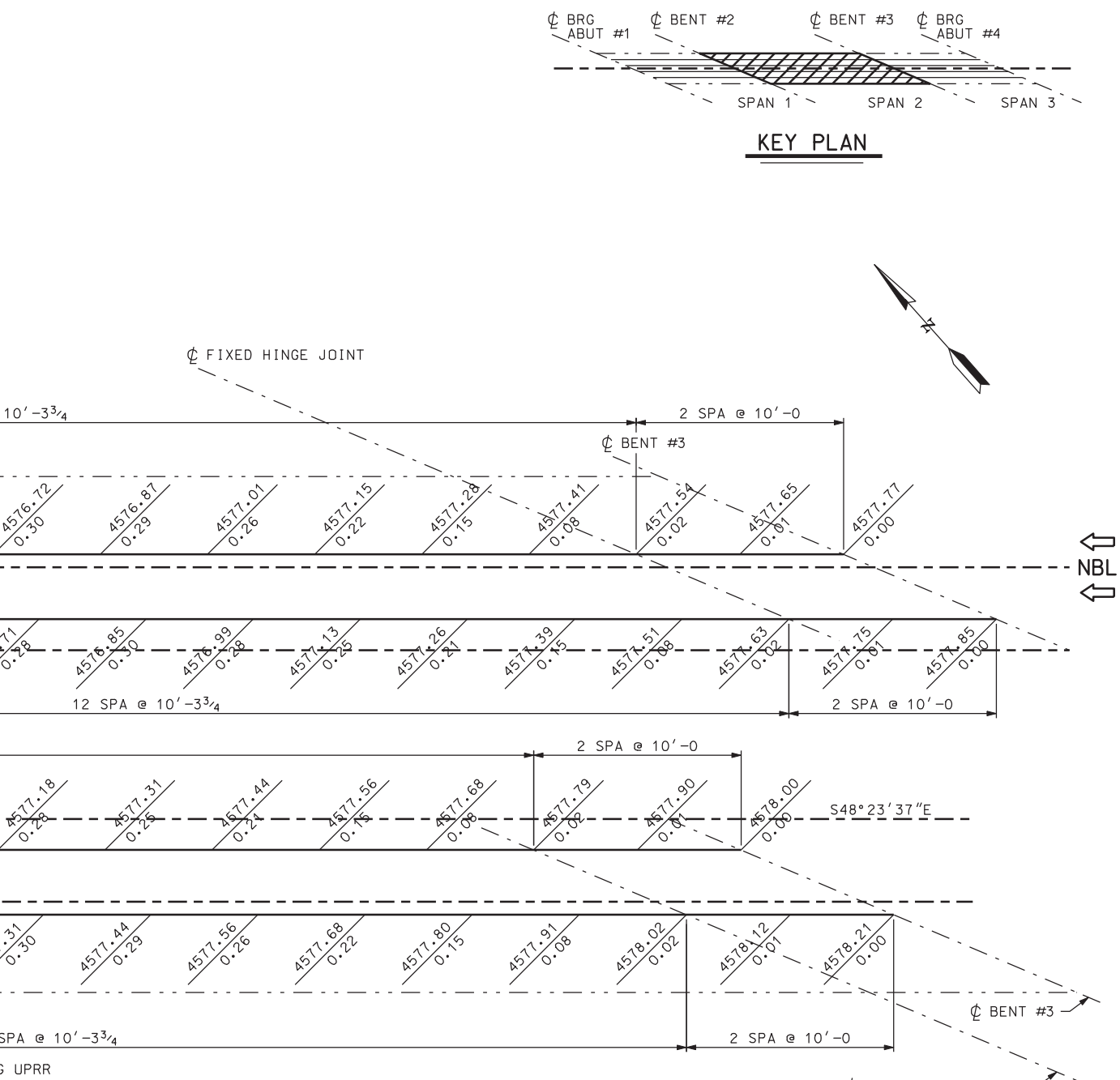


SPAN 2

D ELEVATIONS

## NOTES

1. FIGURES ABOVE THE LINES ARE FINISHED GRADE ELEVATIONS AT THE TOP OF CONCRETE BEFORE THE OVERLAY IS APPLIED. FIGURES BELOW THE LINES ARE DEADLOAD DEFLECTIONS (FT). ADD THE DEFLECTIONS TO THE FINISHED GRADE ELEVATIONS TO OBTAIN SCREED ELEVATIONS.
2. ALL DIMENSIONS ARE ALONG ℄ GIRDER.
3. VERIFY THE FINISHED GRADE ELEVATIONS TO MATCH THE CROSS-SLOPE OF THE EXISTING STRUCTURE.
4. ℄ C-341W IS SHOWN SEPARATED FOR THE NORTHBOUND AND SOUTHBOUND STRUCTURES TO FACILITATE PRESENTATION OF DATA.
5. COORDINATE APPROACH SLAB ELEVATIONS WITH ROADWAY GRADING.

| NO. | DATE | BY | REMARKS |
|---|---|---|---|
| | | | |

REVISIONS

UTAH DEPARTMENT OF TRANSPORTATION
SALT LAKE CITY, UTAH
STRUCTURES DIVISION

DESIGN JAR 12/04 CHECK KMR 12/04
DRAWN RDF 12/04 CHECK KMR 12/04
QUANT. CHECK

APPROVAL RECOMM. DATE SENIOR DESIGN ENGR.
APPROVED FOR USE BY UDOT DATE UDOT BRIDGE ENGR.

I-15; CORRIDOR IN UTAH COUNTY
I-15 OVER RAILROAD AT LEHI
SCREED ELEVATIONS 2
PROJECT NUMBER SP-15-6(52)241

UTAH
COUNTY

C-341W
DRG. NO.

SHT. 29 OF 37

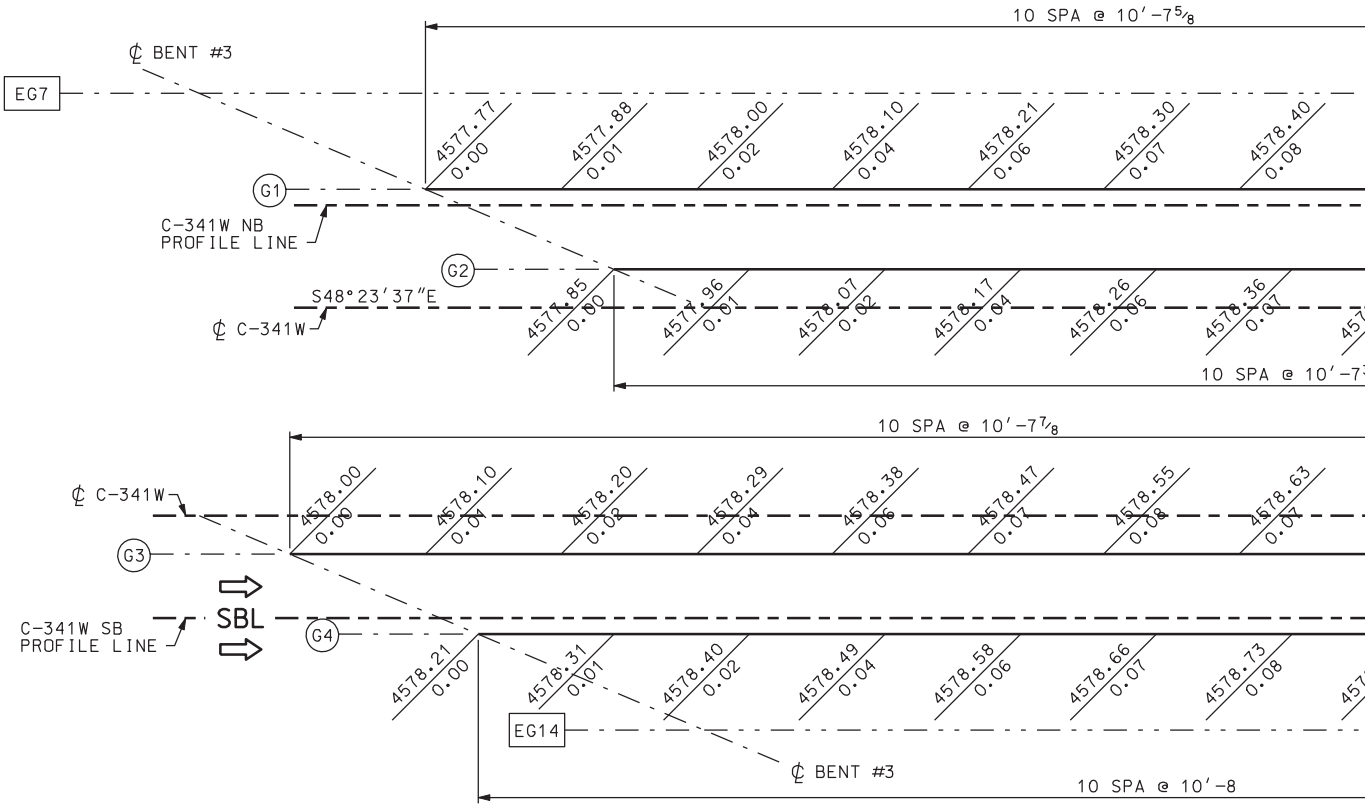


SPAN

SCREED EL

SEE "SCREED ELEVAT

DGN File:IP_PWPcdms1717\4433_C-341-30_SCREED03.dgn

02-MAY-2005

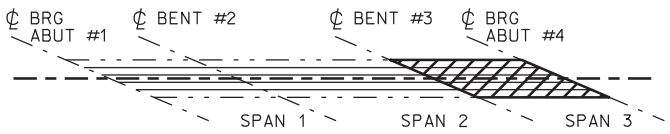


KEY PLAN

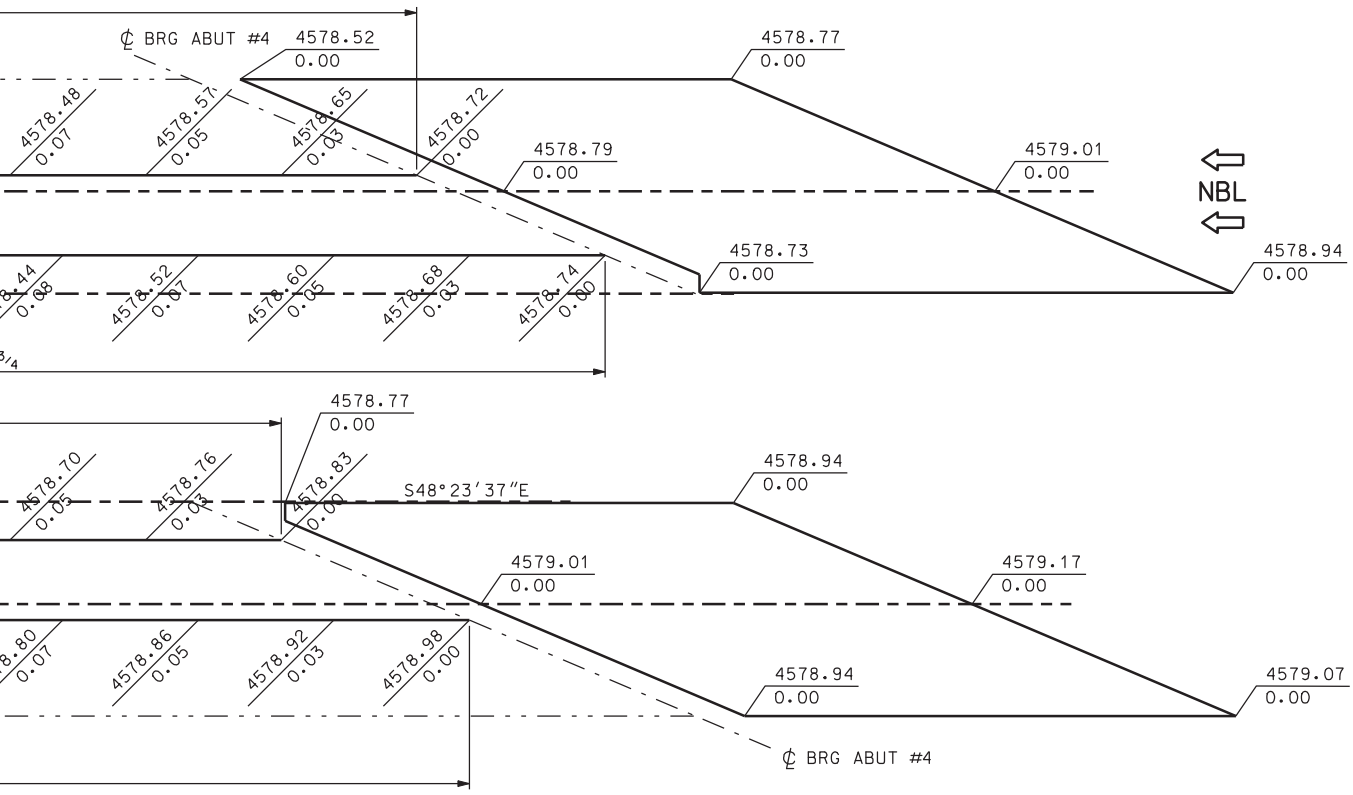


N 3

LEVATIONS

IONS 2" FOR NOTES

| NO. | DATE | BY | REMARKS |
|---|---|---|---|

REVISIONS

UTAH DEPARTMENT OF TRANSPORTATION
SALT LAKE CITY, UTAH
STRUCTURES DIVISION

DESIGN JAR 11/04 CHECK KMR 11/04
DRAWN RDF 12/04 CHECK KMR 12/04
QUANT. CHECK

APPROVAL RECOMM. DATE SENIOR DESIGN ENGR.
APPROVED FOR USE BY UDOT DATE UDOT BRIDGE ENGR.

I-15; CORRIDOR IN UTAH COUNTY
I-15 OVER RAILROAD AT LEHI
SCREED ELEVATIONS 3

PROJECT NUMBER SP-15-6(52)241

UTAH
COUNTY

C-341W
DRG. NO.

SHT. 30 OF 37

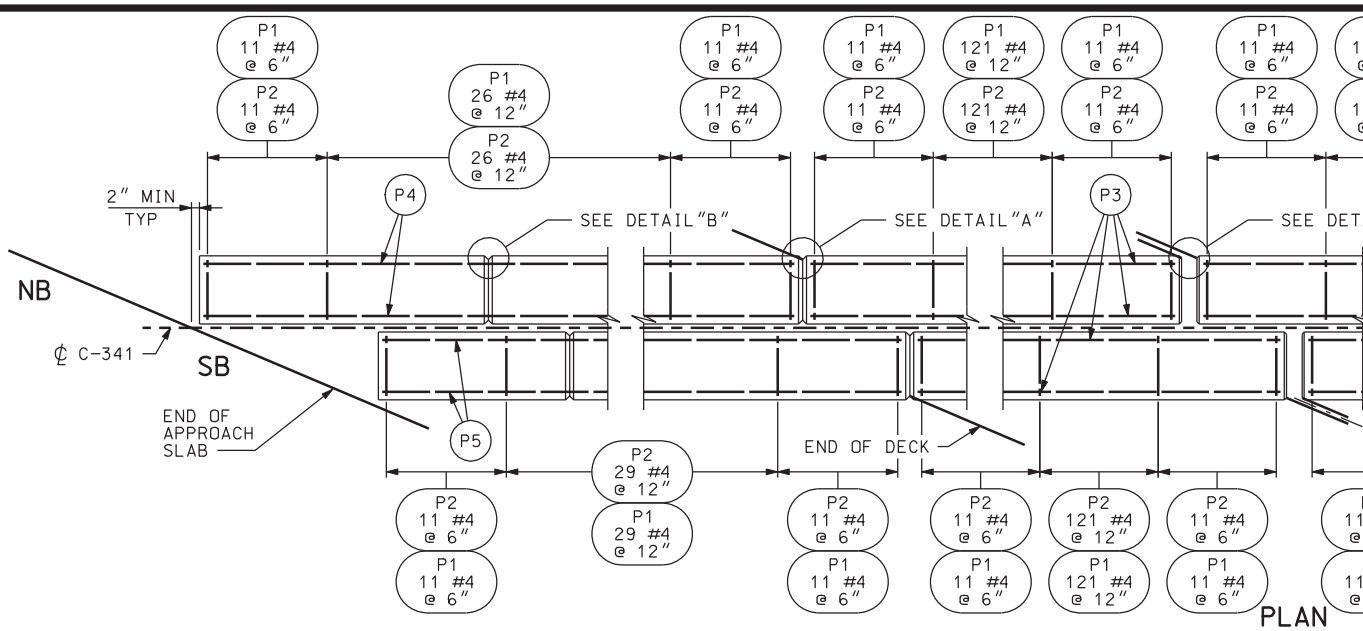


PLAN

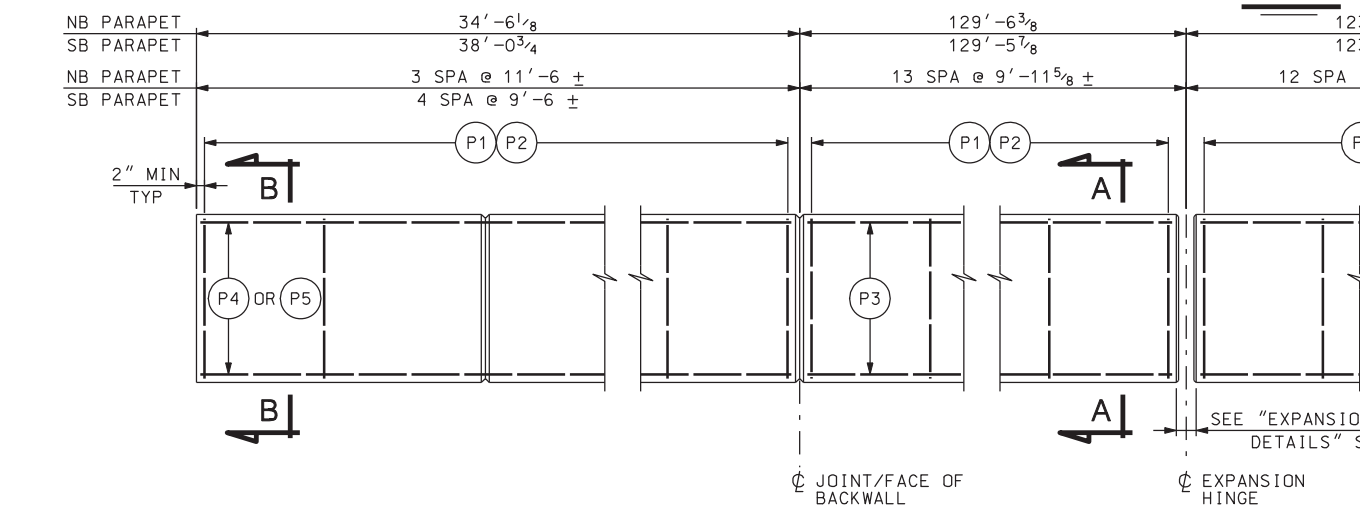


ELEV

ALL DIMENSIONS SHOWN

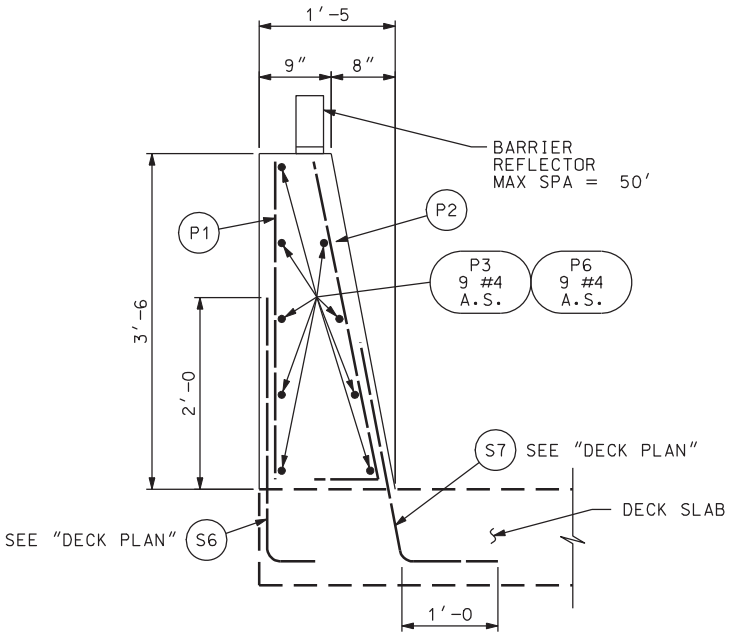


SECTION A-A

NB PARAPET SHOWN, SB SIMILAR

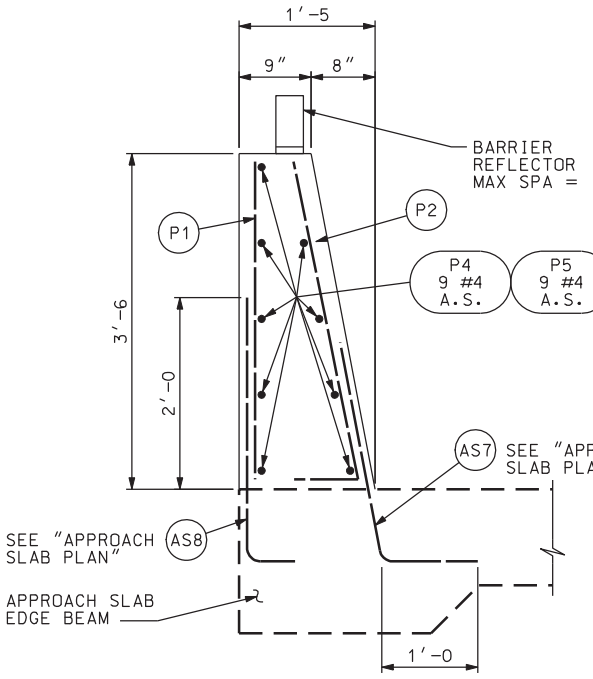


SECTION B-B

NB PARAPET SHOWN, SB SIMILAR

DGN File: IP_PWPcdns1717\4433_C-341-31_PAR001.dgn
02-MAY-2005

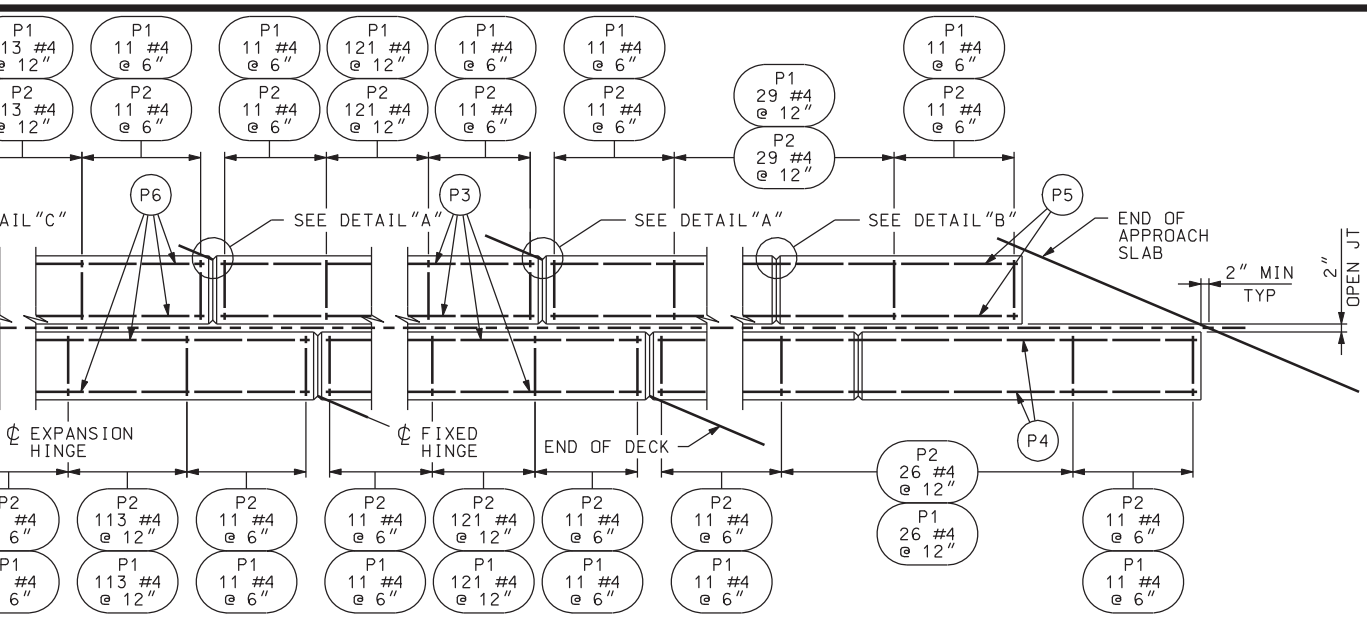


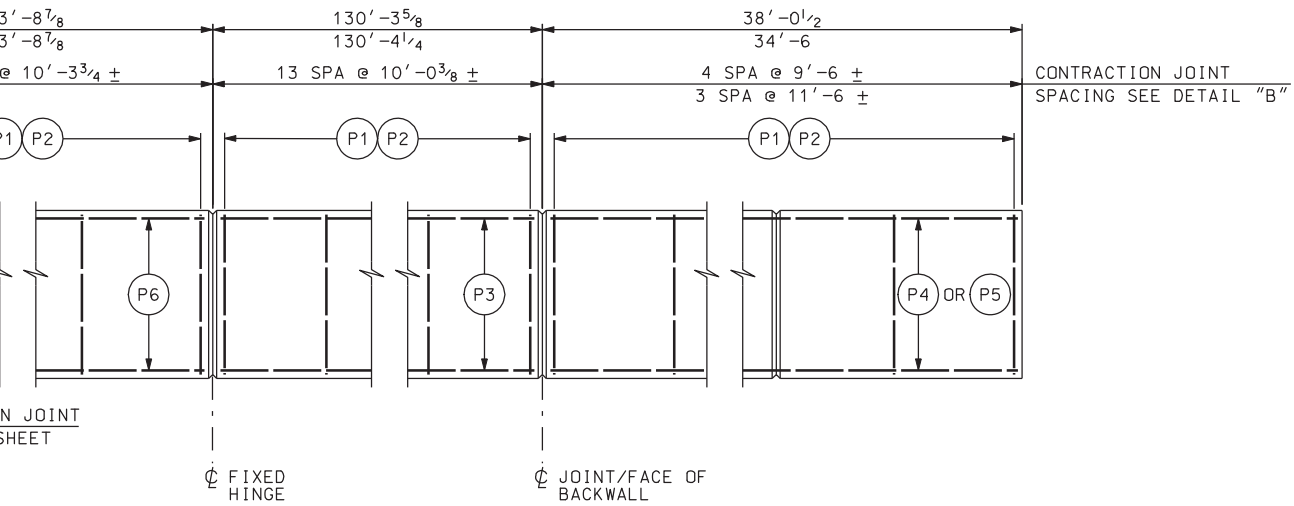


VATION

ARE ALONG EDGE OF DECK

50'

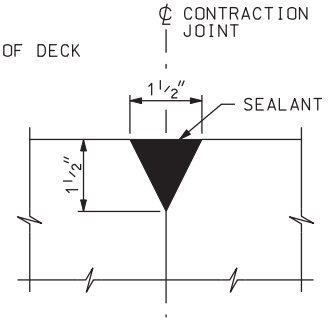


## DETAIL "B"

CONTRACTION JOINT

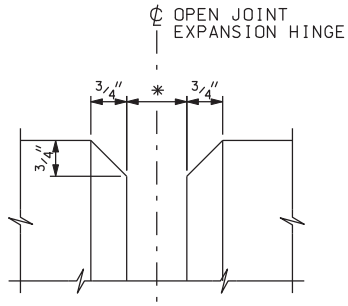


## DETAIL "C"

OPEN JOINT
* SEE "EXPANSION JOINT DETAILS" SHEET

PROACH
AN"

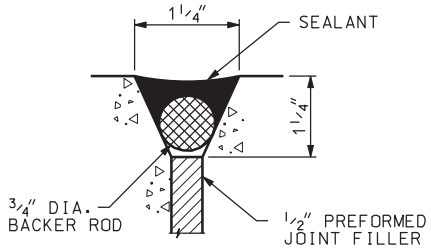


## DETAIL "A"

AT END OF BRIDGE DECK & FIXED HINGE

## NOTES

1. ALTERNATE ALL REINFORCING STEEL SPLICES.
2. PROVIDE 2" MIN. COVER TO REINFORCING STEEL UNLESS NOTED OTHERWISE.
3. PLACE CONTRACTION JOINT ON SIDES AND TOP OF PARAPET.
4. EXTEND SEALANT AND FOAM BACKER ROD FROM DECK TO TOP OF PARAPET ON THE INSIDE PARAPET FACE AND ACROSS TOP OF PARAPET.
5. FOR END DETAILS OF PARAPET, SEE "PARAPET END DETAILS" SHEET.
6. ADJUST BAR SPACING AS REQUIRED TO NOT EXCEED MAXIMUM SPACING SHOWN.

| QUANTITIES STRUCTURAL CONCRETE | |
|---|---|
| NB & SB PARAPETS | 128.1 CY |

| NO. | DATE | BY | REMARKS |
|---|---|---|---|
| | | | |

REVISIONS

UTAH DEPARTMENT OF TRANSPORTATION
SALT LAKE CITY, UTAH
STRUCTURES DIVISION

DESIGN KMR 12/04 CHECK KTF 12/04
DRAWN RDF 12/04 CHECK KTF 12/04
QUANT. KMR 12/04 CHECK KTF 12/04

APPROVAL RECOMM. DATE SENIOR DESIGN ENGR.
APPROVED FOR USE BY UDOT DATE UDOT BRIDGE ENGR.

I-15; CORRIDOR IN UTAH COUNTY
I-15 OVER RAILROAD AT LEHI
PARAPET DETAILS

PROJECT NUMBER SP-15-6(52)241

UTAH
COUNTY

C-341W
DRG. NO.

SHT. 31 OF 37

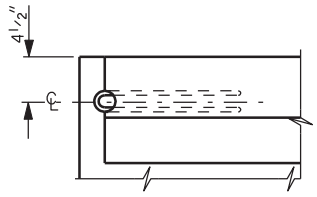


PLAN

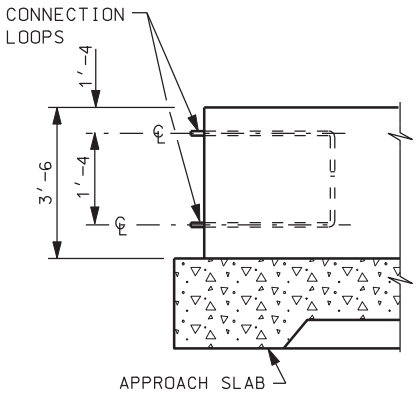


ELEVATION

STANDARD END DETAILS

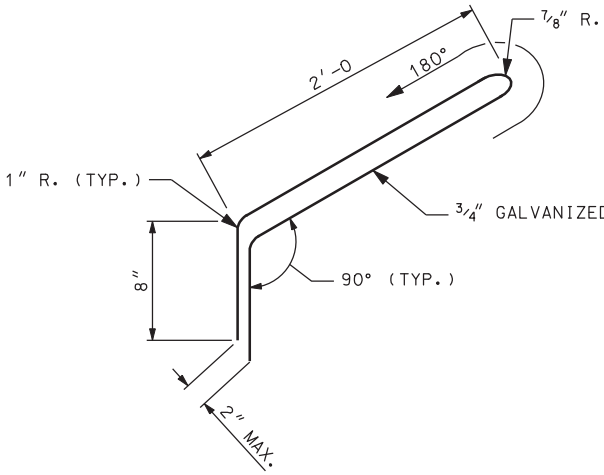


CONNECTION LOOP DETAIL

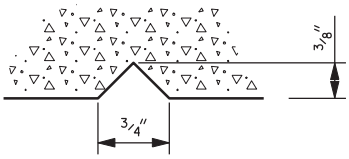


TYPICAL SECTION

THRU STRUCTURE NUMBER

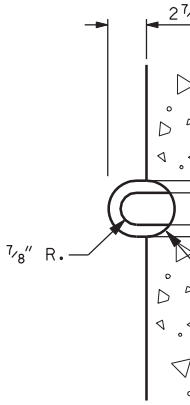


CON

DGN File:IP_PWPcdms1717\4433_C-341-32_PAREND01.dgn

02-MAY-2005

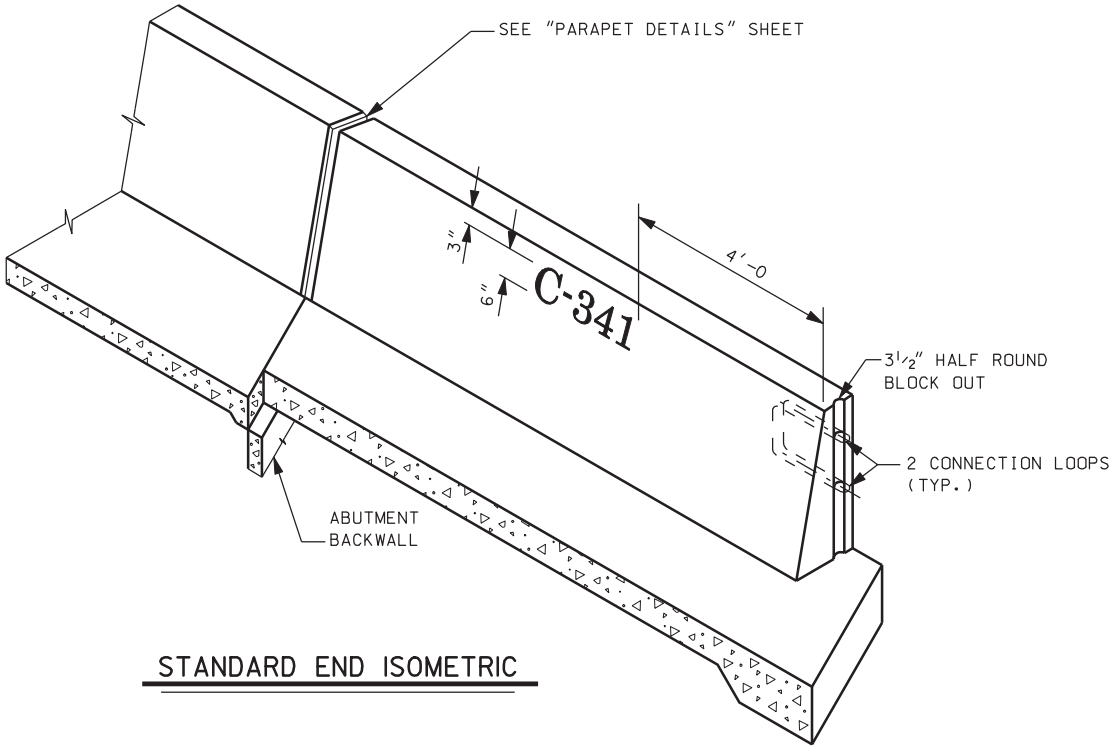


STANDARD END ISOMETRIC

D STEEL BAR

8"

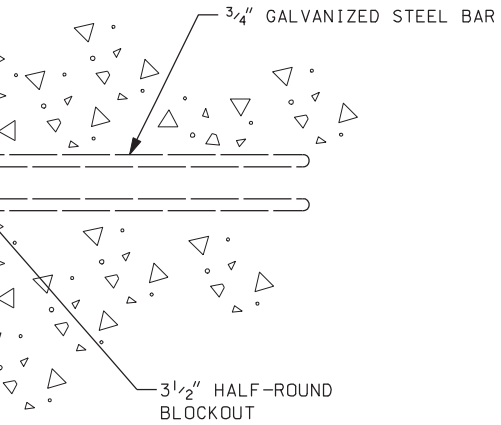


NECTION BAR END DETAIL

## NOTES

1. INSTALL CONNECTION LOOPS AT ALL PARAPET ENDS.
2. CONNECTION LOOPS NOT INCLUDED IN REINFORCING STEEL SCHEDULE.
3. SEE ROADWAY DRAWING DT-08 FOR TRANSITION FROM PARAPET TO PRECAST BARRIER.

| NO. | DATE | BY | REMARKS |
|---|---|---|---|

REVISIONS

UTAH DEPARTMENT OF TRANSPORTATION
SALT LAKE CITY, UTAH
STRUCTURES DIVISION

DESIGN PBB 10/04 CHECK KMR 10/04
DRAWN RDF 10/04 CHECK KMR 10/04
QUANT. CHECK

APPROVAL RECOMM. DATE SENIOR DESIGN ENGR.
APPROVED FOR USE BY UDOT DATE UDOT BRIDGE ENGR.

I-15; CORRIDOR IN UTAH COUNTY
I-15 OVER RAILROAD AT LEHI
PARAPET END DETAILS
PROJECT NUMBER SP-15-6(52)241

UTAH
COUNTY

C-341W
DRG. NO.

SHT. 32 OF 37

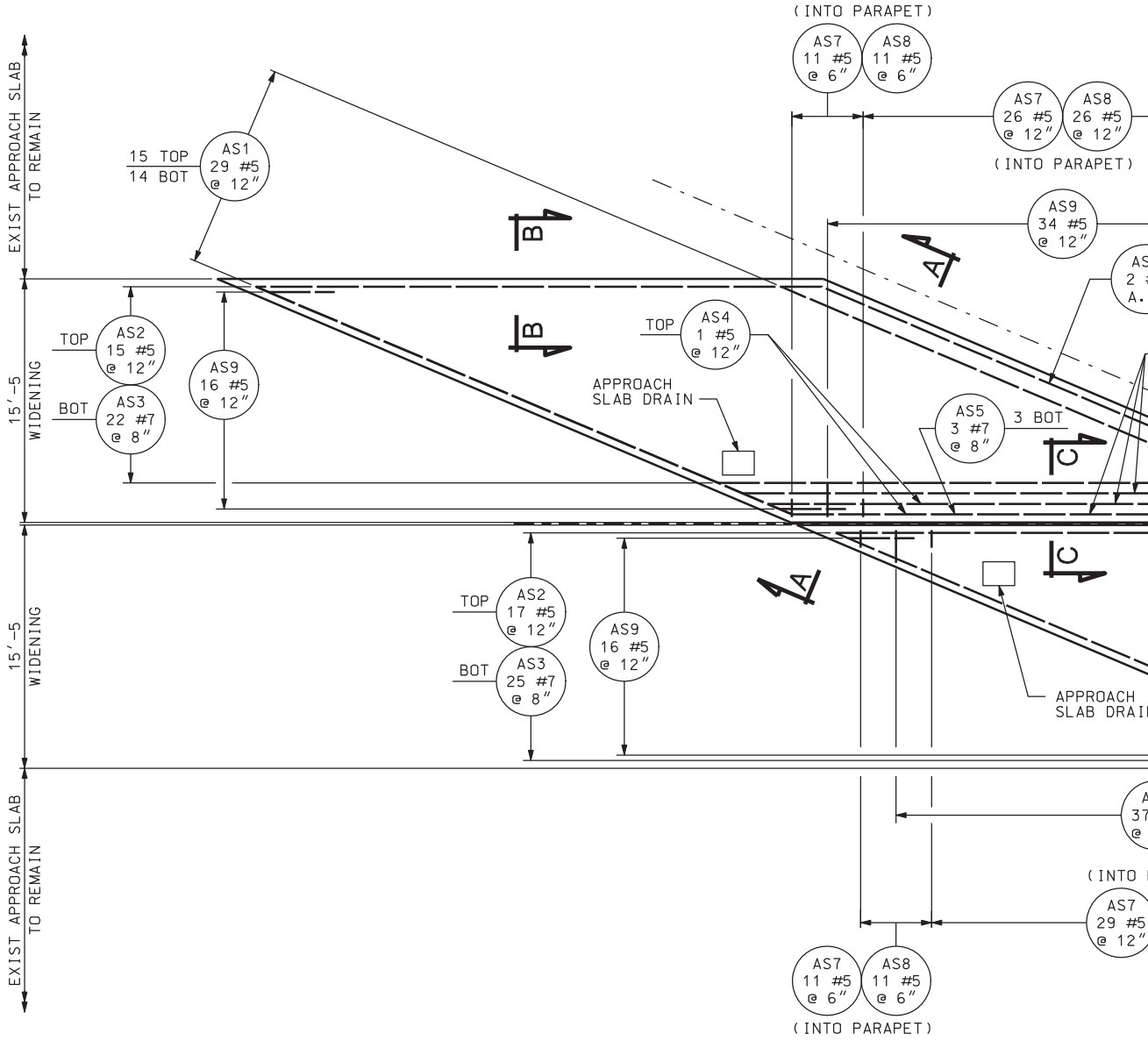


PL

ABUT #1 APPRO
ABUT #4

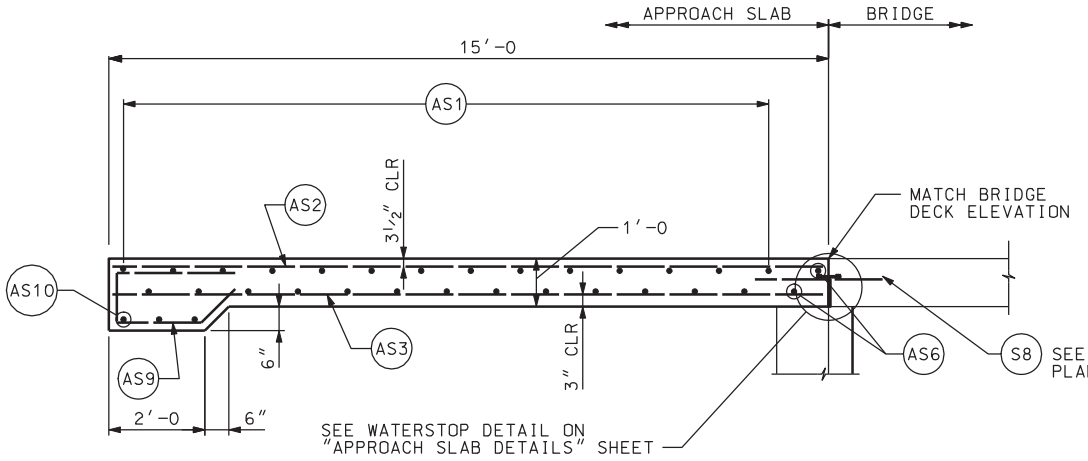


SECTION A-A

DGN File: IP_PWPcdms1717\4433_C-341-33_APPSLB01.dgn

02-MAY-2005

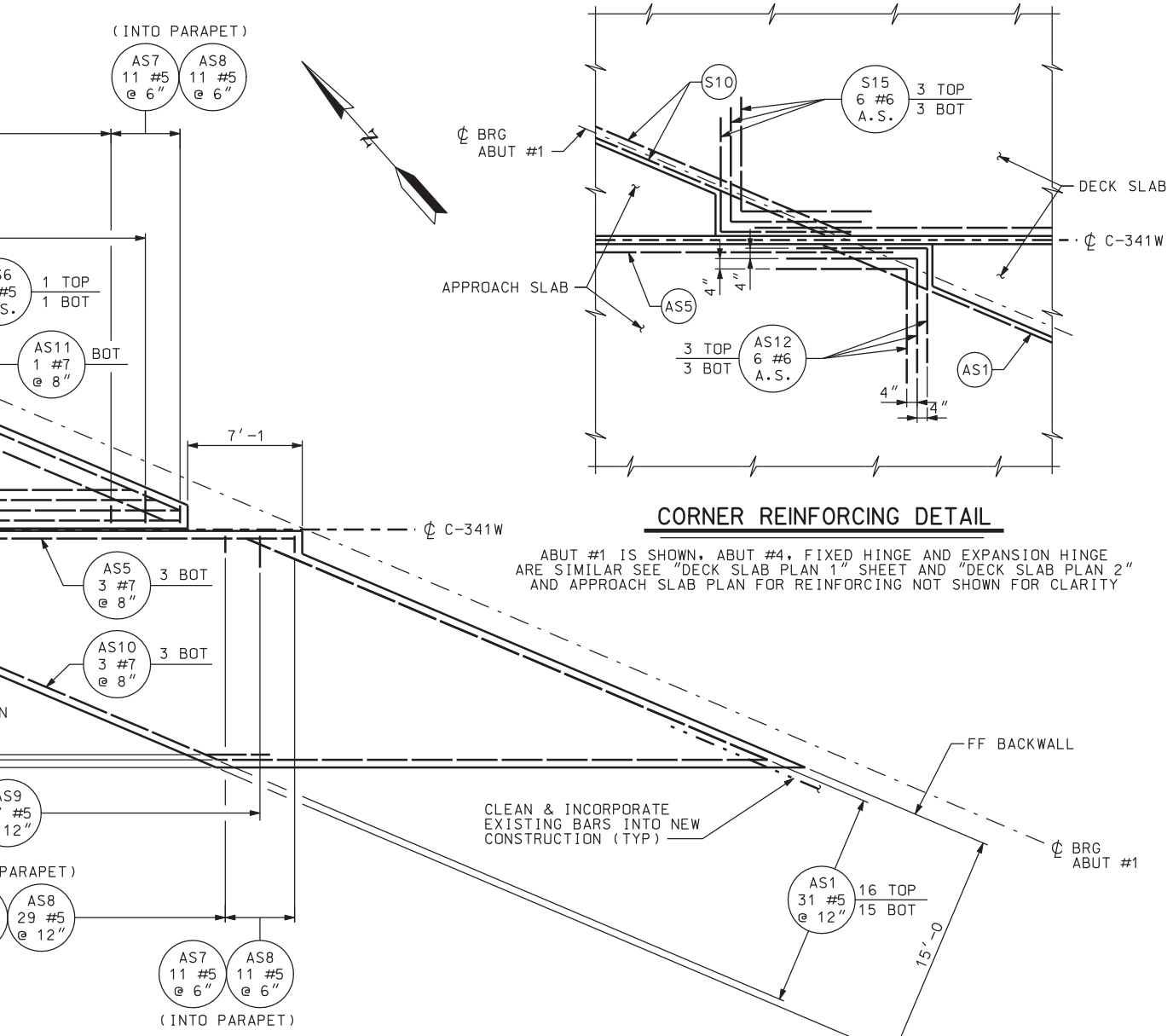


LAN

ACH SLAB SHOWN,
SIMILAR




## CORNER REINFORCING DETAIL

ABUT #1 IS SHOWN, ABUT #4, FIXED HINGE AND EXPANSION HINGE ARE SIMILAR SEE "DECK SLAB PLAN 1" SHEET AND "DECK SLAB PLAN 2" AND APPROACH SLAB PLAN FOR REINFORCING NOT SHOWN FOR CLARITY

SLAB
ET

| APPROACH SLAB DRAIN LOCATIONS | |
|---|---|
| STATION | OFFSET |
| 1101+54.16 | 2.67' LT |
| 1101+66.76 | 2.67' RT |

## NOTES

1. SEE "APPROACH SLAB DETAILS" SHEET FOR SECTIONS B-B AND C-C.
2. FOR APPROACH SLAB ELEVATIONS, SEE "SCREED ELEVATIONS" SHEET.
3. APPROACH SLAB DRAIN LOCATIONS SHOWN ARE AT CENTER OF DRAIN GRATE. SEE "APPROACH SLAB DRAIN DETAILS".
4. STAGGER (AS1) BARS SUCH THAT THE TOP BARS ARE OFFSET 6" FROM BOTTOM BARS.

| QUANTITIES STRUCTURAL CONCRETE | |
|---|---|
| APPROACH NB & SB | 101.4 CY |

| NO. | DATE | BY | REMARKS |
|---|---|---|---|
| | | | |

REVISIONS

UTAH DEPARTMENT OF TRANSPORTATION
SALT LAKE CITY, UTAH
STRUCTURES DIVISION

DESIGN KMR 12/04 CHECK KTF 12/04
DRAWN RDF 12/04 CHECK KTF 12/04
QUANT. KMR 12/04 CHECK KTF 12/04

APPROVAL RECOMM. DATE SENIOR DESIGN ENGR.
APPROVED FOR USE BY UDOT DATE UDOT BRIDGE ENGR.

I-15; CORRIDOR IN UTAH COUNTY
I-15 OVER RAILROAD AT LEHI
APPROACH SLAB PLAN

PROJECT NUMBER SP-15-6(52)241

UTAH
COUNTY

C-341W
DRG. NO.

SHT. 33 OF 37

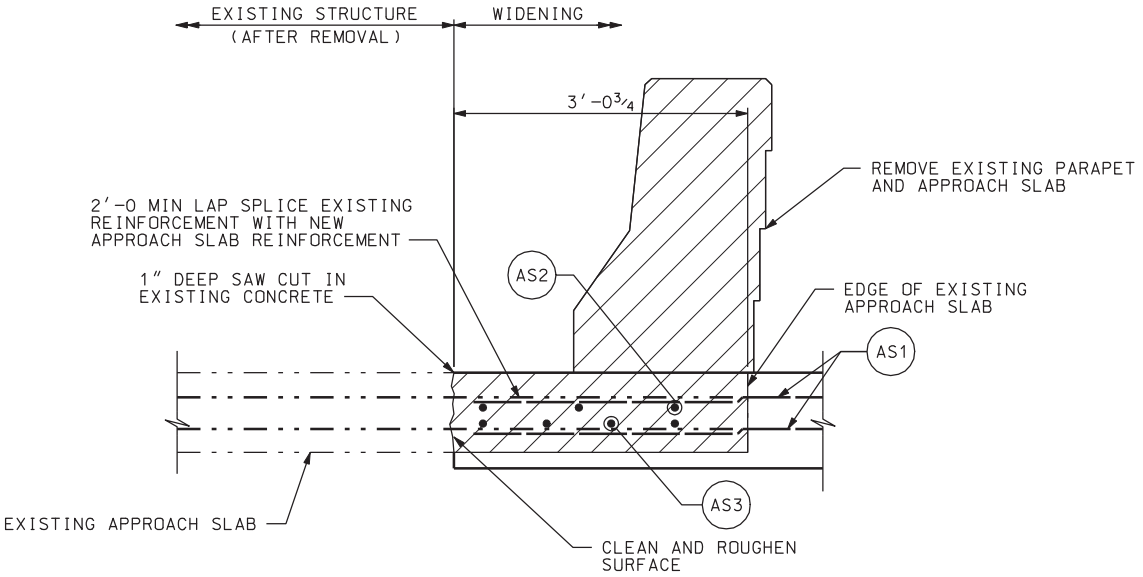


## SECTION B-B

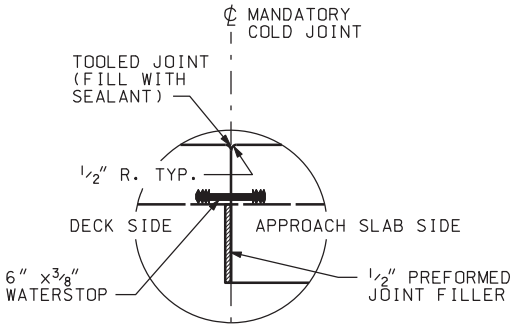


## WATERSTOP DETAIL

NOTE: THE COST OF CONCRETE REMOVAL IS INCIDENTAL TO THE COST OF "PREPARE BRIDGE FOR WIDENING" BID ITEM. SEE THE SPECIAL PROVISIONS FOR "PREPARE BRIDGE WIDENING".

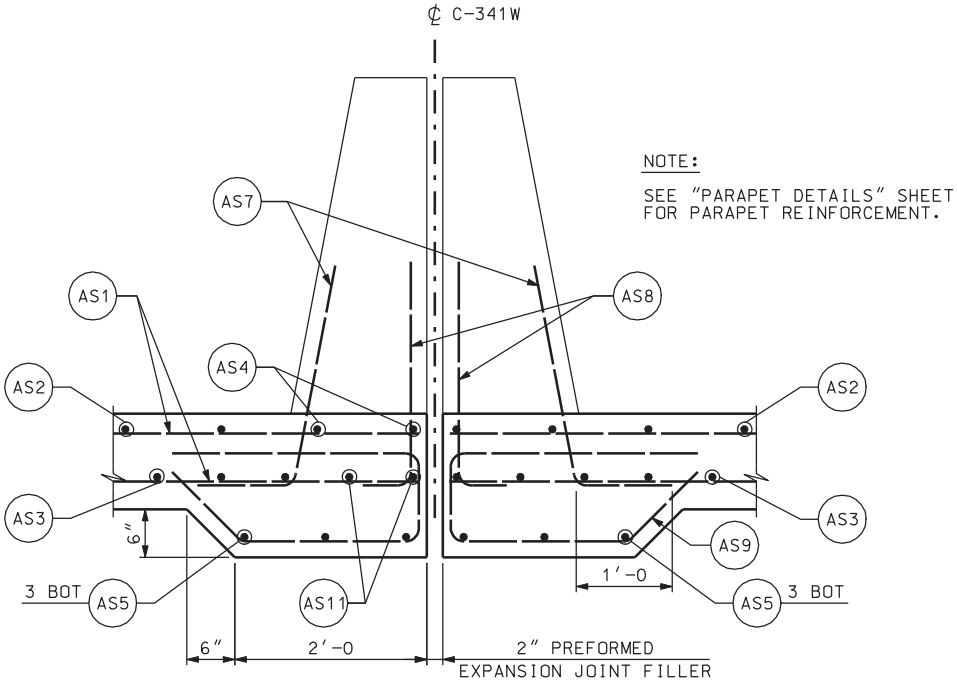


## SECTION C-C

| NO. | DATE | BY | REMARKS |
|---|---|---|---|
| | | | |

REVISIONS

UTAH DEPARTMENT OF TRANSPORTATION
SALT LAKE CITY, UTAH
STRUCTURES DIVISION

DESIGN KMR 10/04 CHECK KTF 10/04
DRAWN RDF 10/04 CHECK KTF 10/04
QUANT. CHECK

APPROVAL RECOMM. DATE SENIOR DESIGN ENGR.
APPROVED FOR USE BY UDOT DATE UDOT BRIDGE ENGR.

I-15; CORRIDOR IN UTAH COUNTY
I-15 OVER RAILROAD AT LEHI
APPROACH SLAB DETAILS

PROJECT NUMBER SP-15-6(52)241

UTAH
COUNTY

C-341W
DRG. NO.

SHT. 34 OF 37

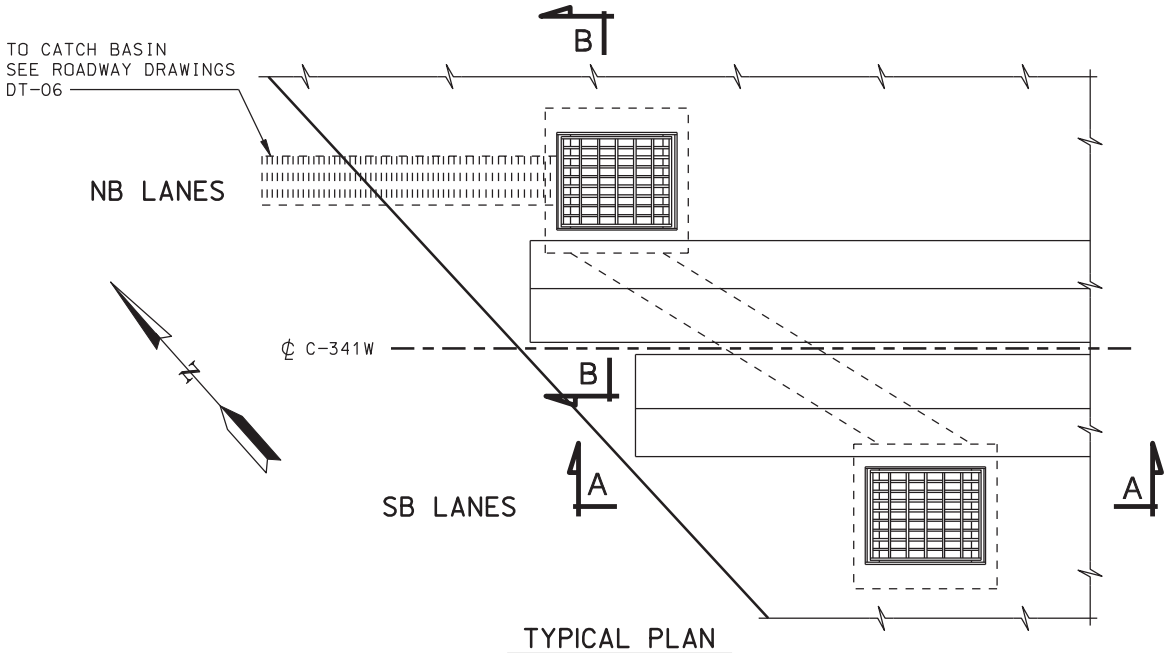


TYPICAL PLAN

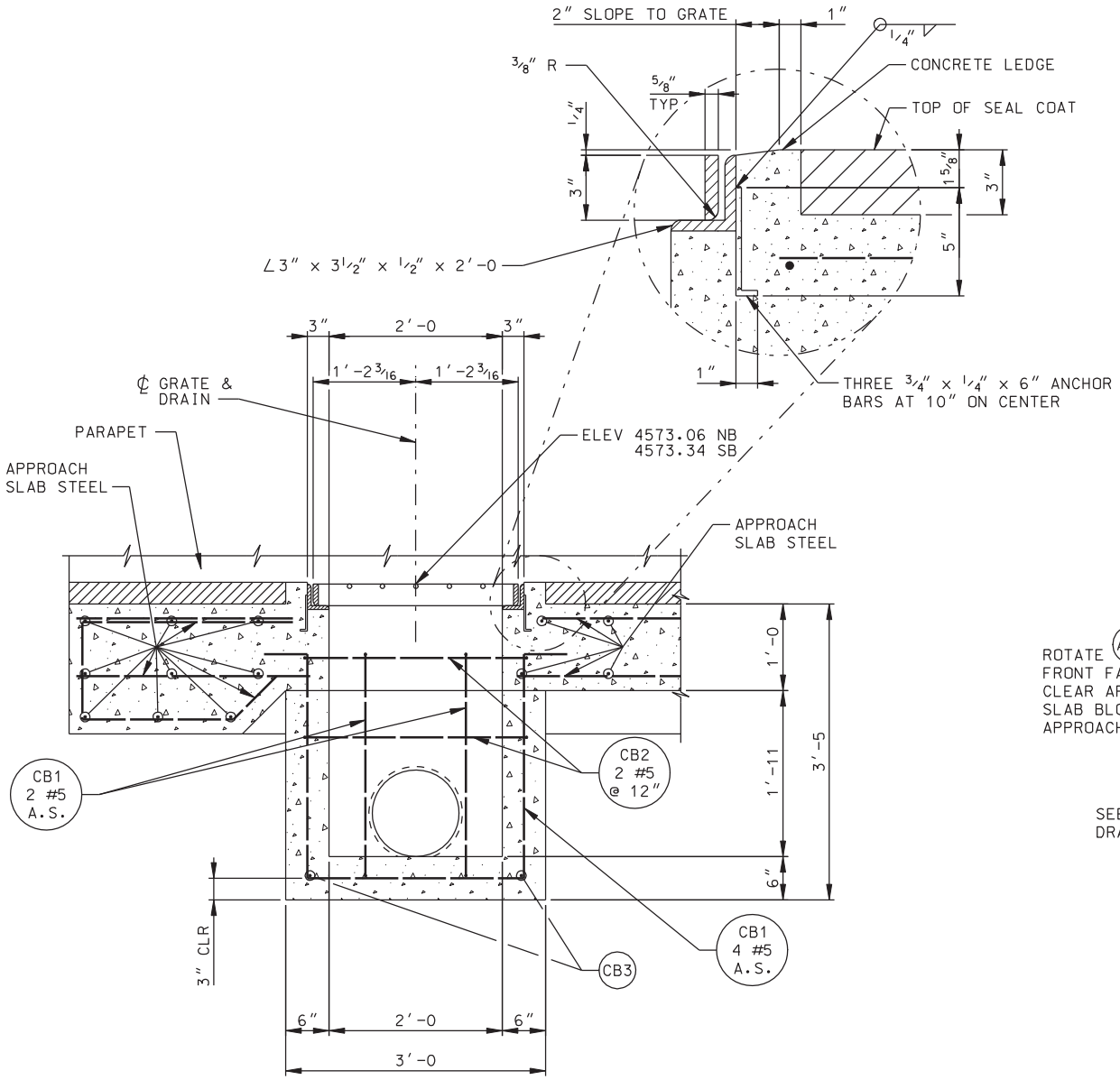


SECTION A-A

DGN File:IP_PWPcdms1717\4433_C-341-35_APPDRN01.dgn

02-MAY-2005

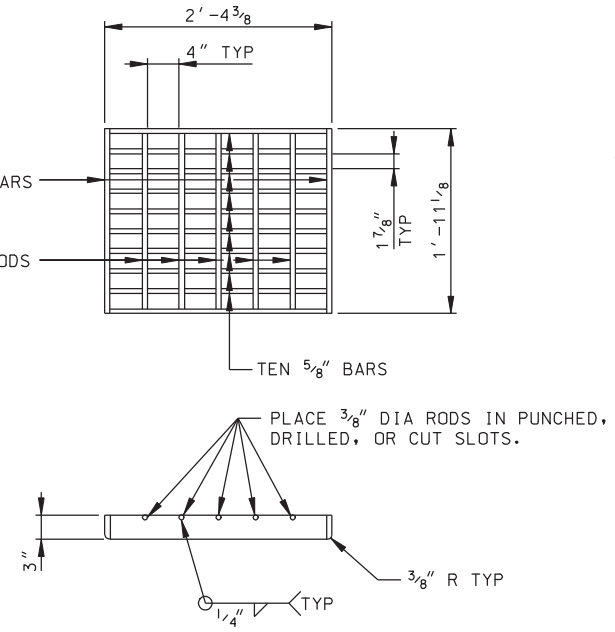


GRATE DETAIL

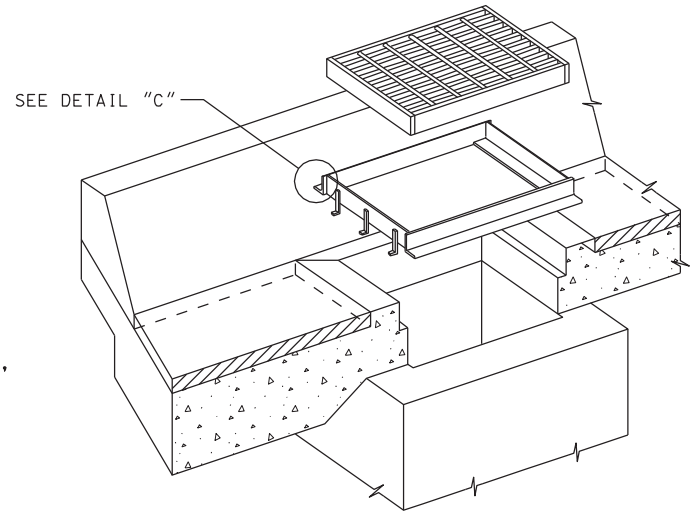


ISOMETRIC

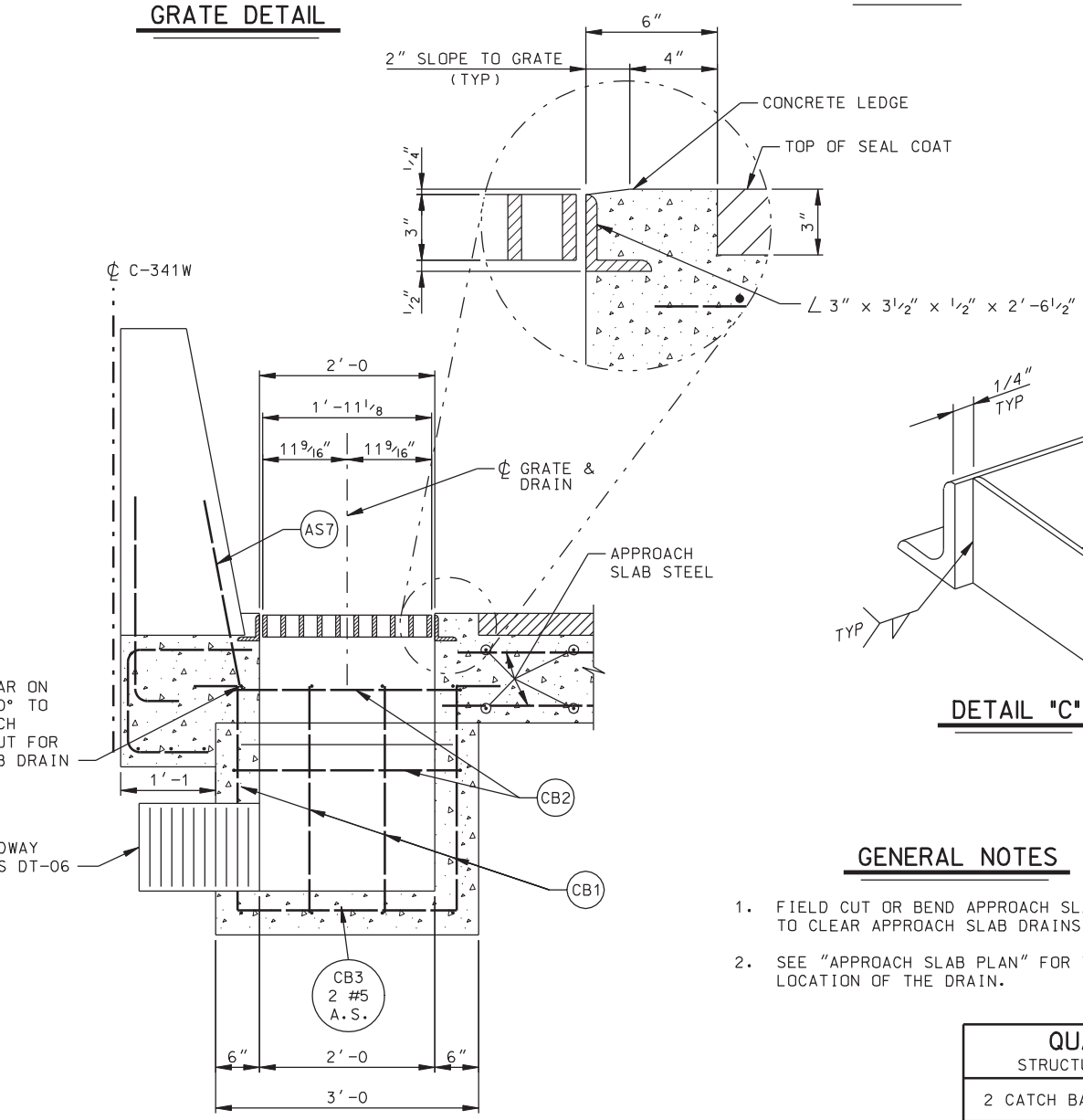


SECTION B-B

DETAIL "C"

## GENERAL NOTES

1. FIELD CUT OR BEND APPROACH SLAB REINFORCING TO CLEAR APPROACH SLAB DRAINS.
2. SEE "APPROACH SLAB PLAN" FOR THE ACTUAL LOCATION OF THE DRAIN.

| QUANTITIES STRUCTURAL CONCRETE | |
|---|---|
| 2 CATCH BASINS | 1.0 CY |

| QUANTITIES STRUCTURAL STEEL | |
|---|---|
| 2 GRATES & FRAMES | 546 LBS |

| NO. | DATE | BY | REMARKS |
|---|---|---|---|
| | | | |

REVISIONS

UTAH DEPARTMENT OF TRANSPORTATION
SALT LAKE CITY, UTAH
STRUCTURES DIVISION

DESIGN KMR 10/04 CHECK KTF 10/04
DRAWN RDF 10/04 CHECK KTF 10/04
QUANT. KMR 11/04 CHECK KTF 11/04

APPROVAL RECOMM. DATE SENIOR DESIGN ENGR.
APPROVED FOR USE BY UDOT DATE UDOT BRIDGE ENGR.

I-15; CORRIDOR IN UTAH COUNTY
I-15 OVER RAILROAD AT LEHI
APPROACH SLAB DRAIN DETAILS

PROJECT NUMBER SP-15-6(52)241

UTAH
COUNTY

C-341W
DRG. NO.

SHT. 35 OF 37

# REINFORCING ST

| | MARK | SIZE | NUM | LENGTH | TOTAL | DIAGRAM |
|---|---|---|---|---|---|---|
| DECK | S1 | 5 | 124 | 137′-3 | 17,019′-0 | 2′-6 / 2′-6 / 129′-9 |
| | NUMBER OF SPLICES = 3 | | | | | |
| | S2 | 5 | 1376 | 15′-1 | 20,754′-8 | 15′-1 |
| | S3 | 5 | 60 | 47′-6 | 2850′-0 | 2′-6 / 45′-0 |
| | NUMBER OF SPLICES = 1 | | | | | |
| | S4 | 5 | 472 | 6′-0 | 2832′-0 | 6′-0 |
| | S5 | 5 | 2412 | 8′-0½ | 19,396′-6 | VARIES 1′-0 TO 15′-1 |
| | NO OF SETS | 12 | | | | |
| | BARS/ SET | 201 | | | | |
| | S6 | 5 | 846 | 3′-1 | 2608′-6 | 7″ / 2′-7 |
| | S7 | 5 | 846 | 3′-7 | 3031′-6 | 101° / 1′-0 / 2′-8 |
| | S8 | 5 | 32 | 4′-0 | 128′-0 | 4′-0 |
| | S9 | 5 | 176 | 3′-6 | 616′-0 | 7″ / 7″ / 135° / 135° / 9″ / 11″ / 1′-1 |
| | S10 | 5 | 24 | 38′-8 | 928′-0 | 38′-8 |
| | S11 | 5 | 88 | 3′-11 | 344′-8 | 7″ / 7″ / 135° / 135° / 9″ / 11″ / 1′-6 |
| | S12 | 5 | 48 | 12′-3 | 588′-0 | 12′-3 |
| | S13 | 6 | 60 | 8′-0 | 480′-0 | 8′-0 |
| | S14 | 5 | 62 | 131′-2 | 8132′-4 | 2′-6 / 2′-6 / 123′-8 |
| | NUMBER OF SPLICES = 3 | | | | | |
| | S15 | 6 | 36 | 7′-2 | 258′-0 | 3′-8 / 3′-8 |
| APPROACH SLAB | AS1 | 5 | 120 | 38′-8 | 4640′-0 | 38′-8 |
| | AS2 | 5 | 64 | 37′-7 | 2405′-4 | 37′-7 |
| | AS3 | 7 | 94 | 37′-7 | 3532′-10 | 37′-7 |

| | MARK | SIZE | NUM | LENGTH | TOTA |
|---|---|---|---|---|---|
| APPROACH SLAB | AS4 | 5 | 4 | 34′-1 | 136′ |
| | AS5 | 7 | 12 | 34′-1 | 409′ |
| | AS6 | 5 | 4 | 35′-1 | 140′ |
| | AS7 | 5 | 198 | 3′-7 | 709′ |
| | AS8 | 5 | 198 | 2′-11 | 577′ |
| | AS9 | 5 | 206 | 5′-7 | 1150 |
| | AS10 | 7 | 12 | 38′-8 | 464′ |
| | AS11 | 7 | 6 | 34′-1 | 204′ |
| | AS12 | 6 | 12 | 7′-2 | 86′ |
| PARAPETS | P1 | 4 | 1040 | 3′-4 | 3466 |
| | P2 | 4 | 1040 | 4′-2 | 4333 |
| | P3 | 4 | 36 | 137′-6 | 4950 |
| | NUMBER OF SPLICES = 3 | | | | |
| | P4 | 4 | 18 | 34′-2 | 615′ |
| | P5 | 4 | 18 | 37′-9 | 679′ |
| | P6 | 4 | 18 | 130′-10 | 2355 |
| | NUMBER OF SPLICES = 3 | | | | |
| FOOTING | F11 | 8 | 240 | 10′-9 | 2580′ |
| | F12 | 9 | 192 | 11′-2 | 2144′ |

# TEEL SCHEDULE

| AL | DIAGRAM |
|---|---|
| -4 | 34′-1 |
| -0 | 34′-1 |
| -4 | 35′-1 |
| -6 | 101°, 1′-0, 2′-8 |
| -6 | 7″, 2′-7 |
| ′-2 | 2′-6, 9″, 135°, 1′-0, 1′-8 |
| -0 | 38′-8 |
| -6 | 34′-1 |
| -0 | 3′-8, 3′-8 |
| ′-8 | 3′-4 |
| ′-4 | 6″, 79°, 3′-5 |
| ′-0 | 2′-6 MIN, 2′-6 MIN, 130′-0 |
| -0 | 34′-2 |
| -6 | 37′-9 |
| ′-0 | 2′-6, 2′-6, 123′-4 |
| -0 | 8′-6 |
| -0 | 8′-6 |

| | MARK | SIZE | NUM | LENGTH | TOTAL | DIAGRAM |
|---|---|---|---|---|---|---|
| FOOTING | F13 | 5 | 640 | 4′-1 | 2613′-4 | 3′-3 |
| COLUMN | C21 | 9 | 80 | 35′-4 | 2826′-8 | 32′-8 |
| | C22 | 5 | 680 | 9′-3 | 6290′-0 | 2′-2, 2′-2 |
| | C23 | 5 | 2720 | 4′-7 | 12,466′-8 | 2′-2, 7″ |
| | C24 | 5 | 48 | 3′-6 | 168′-0 | 3′-0 |
| | C25 | 9 | 80 | 37′-8 | 3013′-4 | 35′-0 |
| BENT CAP | B20 | 5 | 12 | 7′-8 | 92′-0 | 2′-6, 2′-6, 2′-11 |
| | B21 | 6 | 32 | 9′-0 | 288′-0 | 9′-0 |
| | B22 | 5 | 24 | 8′-0 | 192′-0 | 3′-0, 3′-0, 2′-3 |
| | B23 | 10 | 40 | 32′-10 | 1313′-4 | 31′-4 |
| | B24 | 10 | 40 | 32′-3 | 1290′-0 | 156°, 156°, 3′-8, 25′-0, 3′-8 |
| | B25 | 5 | 24 | 31′-4 | 752′-0 | 31′-4 |

| NO. | DATE | BY | REMARKS |
|---|---|---|---|
| | | | |

REVISIONS

UTAH DEPARTMENT OF TRANSPORTATION
SALT LAKE CITY, UTAH
STRUCTURES DIVISION

DESIGN RDF 11/04 CHECK PBB 11/04
DRAWN RDF 11/04 CHECK PBB 11/04
QUANT. PBB 11/04 CHECK JW 11/04

APPROVAL RECOMM. DATE SENIOR DESIGN ENGR.
APPROVED FOR USE BY UDOT DATE UDOT BRIDGE ENGR.

I-15; CORRIDOR IN UTAH COUNTY
I-15 OVER RAILROAD AT LEHI
REINFORCING STEEL SCHEDULE 1

PROJECT NUMBER SP-15-6(52)241

UTAH
COUNTY

C-341W
DRG. NO.

SHT. 36 OF 37

# REINFORCING ST

| | MARK | SIZE | NUM | LENGTH | TOTAL | DIAGRAM |
|---|---|---|---|---|---|---|
| BENT CAP | B26 | 5 | 8 | 28′-0 | 224′-0 | 28′-0 |
| | B27 | 5 | 84 | 10′-0 | 840′-0 | 3′-2, 3′-2, 2′-11 |
| | B28 | 5 | 116 | 3′-9 | 435′-0 | 2′-11 |
| | B29 | 5 | 168 | 4′-0 | 672′-0 | 3′-2 |
| | B30 | 5 | 20 | 6′-0 | 120′-0 | 2′-3, 114°, 2′-5, 1′-8 |
| | B31 | 5 | 32 | 8′-6 | 272′-0 | VARIES 3′-2 TO 1′-8, 2′-11 |
| | NO OF SETS | 4 | | | | |
| | BARS/ SET | 8 | | | | |
| | B32 | 5 | 64 | 3′-3 | 208′-0 | VARIES 3′-2 TO 1′-8 |
| | NO OF SETS | 4 | | | | |
| | BARS/ SET | 16 | | | | |
| ABUTMENTS | A1 | 6 | 64 | 6′-8 | 426′-8 | 6′-8 |
| | A2 | 6 | 64 | 5′-1 | 325′-4 | 5′-1 |
| | A3 | 5 | 64 | 14′-9 | 944′-0 | 3′-5, 3′-8 |
| | A4 | 5 | 40 | 6′-5 | 256′-8 | 1′-6, 1′-6, 3′-8 |
| | A5 | 5 | 40 | 6′-2 | 246′-8 | 1′-6, 3′-5 |
| | A6 | 5 | 192 | 3′-0 | 576′-0 | 3′-0 |
| | A7 | | | | | NOT USED |
| | A8 | | | | | NOT USED |
| | A9 | | | | | NOT USED |

| | MARK | SIZE | NUM | LENGTH | TOTA |
|---|---|---|---|---|---|
| ABUTMENTS | A10 | | | | |
| | NOT USED | | | | |
| | A11 | 5 | 52 | 4′-10 | 251′ |
| | NOT USED | | | | |
| | A12 | 5 | 20 | 10′-0 | 200′ |
| | A13 | 5 | 20 | 4′-4 | 86′ |
| | A14 | 5 | 26 | 4′-11 | 127′ |
| | A15 | 5 | 120 | 3′-4 | 400′ |
| PEDESTAL RETROFIT | R1 | 5 | 84 | 2′-11 | 245′ |
| | R2 | 5 | 105 | 2′-11 | 306′ |
| | R3 | 5 | 129 | 8′-3 | 1064 |
| | R4 | 5 | 84 | 5′-5 | 455′ |
| | R5 | 5 | 112 | 3′-11 | 438′ |
| | R6 | 6 | 40 | 2′-10 | 113′ |
| | R7 | 6 | 60 | 3′-10 | 230′ |
| | R8 | 6 | 100 | 5′-1 | 508′ |
| | R9 | 6 | 10 | 6′-5 | 64′ |
| | R10 | 6 | 70 | 7′-11 | 554′ |

DGN File:IP_PWPcdms1717\4433_C-341-37_RBSCH02.dgn
02-MAY-2005

# TEEL SCHEDULE

| AL | DIAGRAM |
|---|---|
| | |
| -4 | 4′-10 |
| -0 | 10′-0 |
| -8 | 4′-4 |
| -10 | 3′-0, 2′-0 |
| -0 | 1′-5, 2′-0 |
| -0 | 2′-11 |
| -3 | 2′-3 |
| ′-3 | 1′-2, 2′-8 |
| -0 | 1′-6, 1′-6, 2′-8 |
| -8 | 1′-6, 1′-6, 1′-2 |
| -4 | 2′-10 |
| -0 | 3′-10 |
| -4 | 5′-1 |
| -2 | 6′-5 |
| -2 | 7′-11 |

| | MARK | SIZE | NUM | LENGTH | TOTAL | DIAGRAM |
|---|---|---|---|---|---|---|
| CATCH BASINS | CB1 | 5 | 12 | 8′-4 | 100′-0 | 7″, 7″, 2′-7, 2′-6 |
| | CB2 | 5 | 8 | 2′-6 | 20′-0 | 2′-6 |
| | CB3 | 5 | 4 | 2′-6 | 10′-0 | 2′-6 |

## SUMMARY

#4 @ 0.668 LBS/FT = 10,934 LBS
#5 @ 1.043 LBS/FT = 125,167 LBS
#6 @ 1.502 LBS/FT = 5007 LBS
#7 @ 2.044 LBS/FT = 9424 LBS
#8 @ 2.670 LBS/FT = 6886 LBS
#9 @ 3.400 LBS/FT = 27,135 LBS
#10 @ 4.303 LBS/FT = 11,207 LBS

TOTAL = 195,760 LBS

## NOTES

1. ALL DIMENSIONS ARE OUT TO OUT BAR UNLESS NOTED OTHERWISE.
2. ALL ANGLES ARE 90° UNLESS NOTED OTHERWISE.
3. ALL BARS ARE COATED.
4. SPLICES MAY BE OMITTED AT FABRICATOR'S OPTION. FABRICATOR ASSUMES RESPONSIBILITY FOR FIT. SPLICES ARE BASED ON 40 FT BAR LENGTHS.
5. ALL REINFORCING STEEL IS INCLUDED IN THE PAY ITEM REINFORCING STEEL-COATED.

| NO. | DATE | BY | REMARKS |
|---|---|---|---|
| | | | |

REVISIONS

UTAH DEPARTMENT OF TRANSPORTATION
SALT LAKE CITY, UTAH
STRUCTURES DIVISION

DESIGN RDF 11/04 CHECK PBB 11/04
DRAWN RDF 11/04 CHECK PBB 11/04
QUANT. PBB 11/04 CHECK JW 11/04

APPROVAL RECOMM. DATE SENIOR DESIGN ENGR.
APPROVED FOR USE BY UDOT DATE UDOT BRIDGE ENGR.

I-15; CORRIDOR IN UTAH COUNTY
I-15 OVER RAILROAD AT LEHI
REINFORCING STEEL SCHEDULE 2

PROJECT NUMBER SP-15-6(52)241

UTAH
COUNTY

C-341W
DRG. NO.

SHT. 37 OF 37

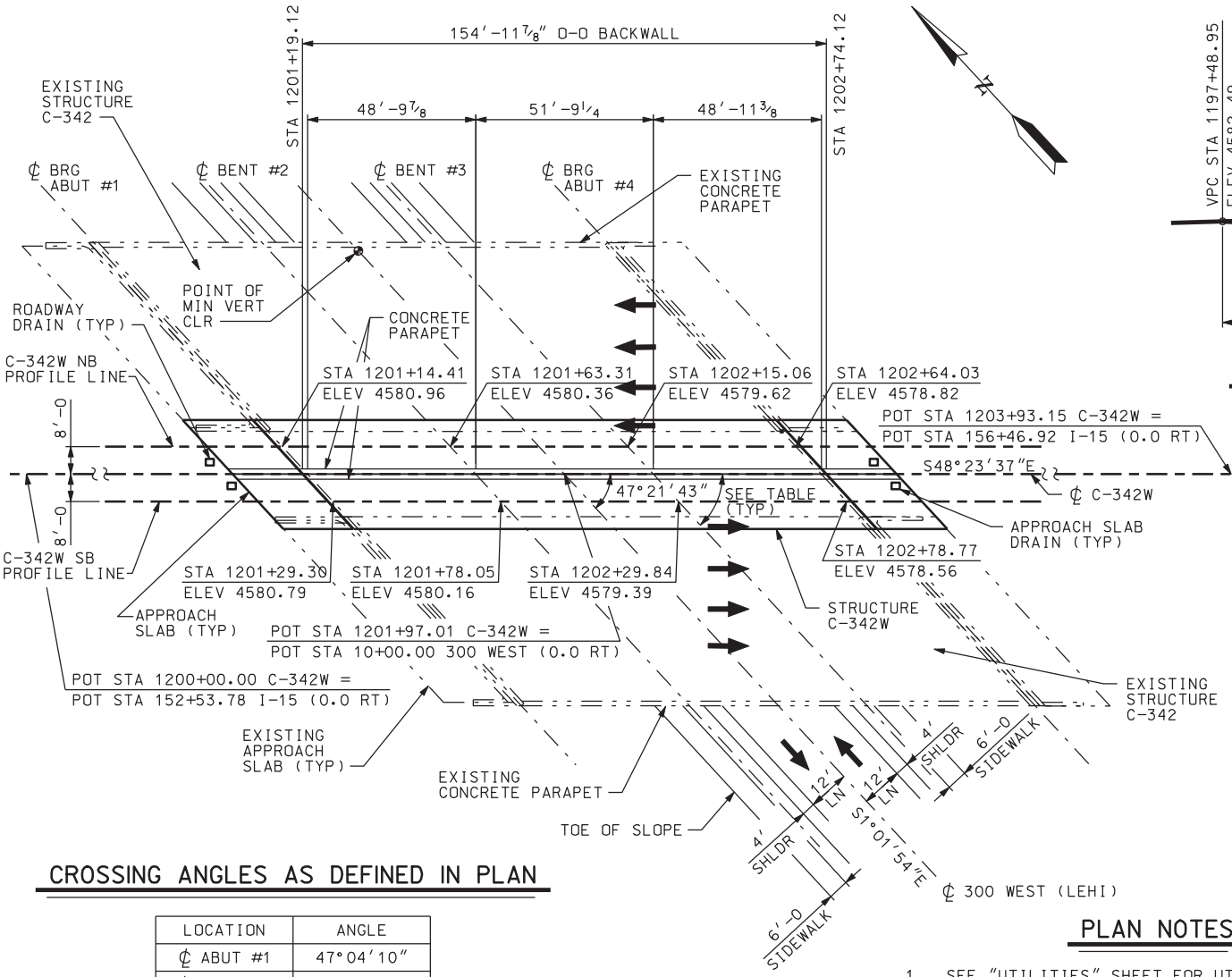


## CROSSING ANGLES AS DEFINED IN PLAN

| LOCATION | ANGLE |
|---|---|
| ℄ ABUT #1 | 47°04'10" |
| ℄ BENT #2 | 47°20'48" |
| ℄ BENT #3 | 47°15'48" |
| ℄ ABUT #4 | 47°21'39" |

## PLAN

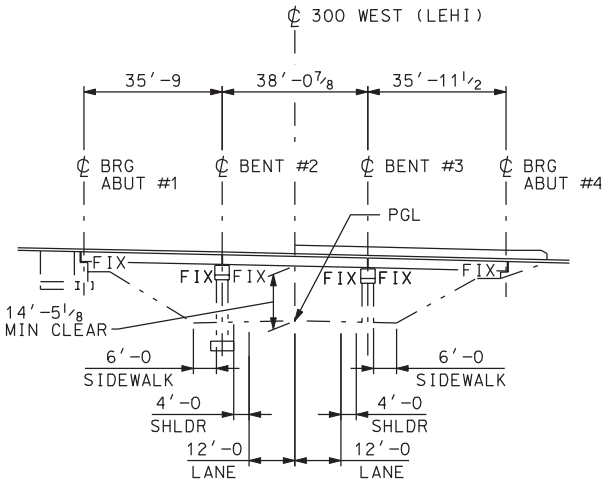


## ELEVATION

NORMAL TO 300 WEST

## PLAN NOTES

1. SEE "UTILITIES" SHEET FOR UT

## GENERAL NOTE

1. USE COATED DEFORMED BILLET-STEEL BARS M 284 OR M 111 AND M 31 GRADE 60 FOR
2. CONFORM ALL STRUCTURAL STEEL TO AASHTO EXCEPT WHERE NOTED OTHERWISE.
3. CHAMFER ALL EXPOSED CONCRETE CORNERS
4. PROVIDE 2" CONCRETE COVER TO REINFORC NOTED OTHERWISE.
5. USE CLASS AA (AE) FOR CAST-IN-PLACE CO SPECIFIED OTHERWISE.
6. ALL NEW SUBSTRUCTURE ELEMENTS ARE DES LINE CONNECTING EXISTING ELEMENTS. F DIMENSIONS PRIOR TO CONSTRUCTION AND REPORT ANY DISCREPANCY BETWEEN THESE TO THE ENGINEER. DO NOT CONSTRUCT OR DISCREPANCIES ARE RESOLVED. ALL STRUC SURVEY CONTROL POINTS SHOWN ON THE FOU STATIONING AND ALIGNMENT IS FOR INFORM DIRECTIONS AND LOCATIONS USED IN DESIG
7. ALL DECK, APPROACH SLAB AND PROFILE GR
8. VERIFY RELATIVE ELEVATION DIFFERENCES NBL AND SBL INTERIOR MOST EXISTING BEA "DECK SECTIONS" SHEET. IF THE RELATIV THAN +/- 1", ADJUST ALL PLAN ELEVATION FOR APPROVAL BEFORE MAKING ANY ADJUSTM
9. SEE EXISTING STRUCTURE C-342 PLANS FOR
10. DO NOT SCALE DRAWINGS.
11. HORIZONTAL DIMENSIONS ARE PLAN. VERT

DGN File:IP_PWPcdnsl717\4433_C-342-01_SL01.dgn
02-MAY-2005

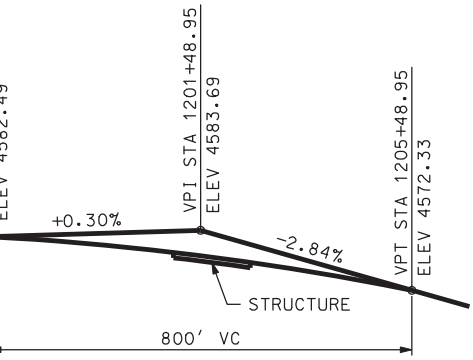


## C-342W PROFILE NB & SB

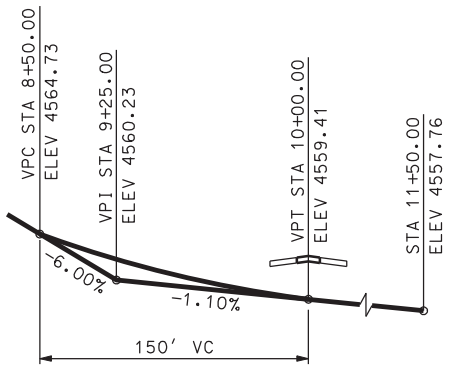


## 300 WEST PROFILE

TILITIES LOCATION.

## ES

CONFORMING TO AASHTO
ALL REINFORCING STEEL.

D M 270 GRADE 36 MIN,

3/4" EXCEPT WHERE NOTED OTHERWISE.

ING STEEL EXCEPT WHERE

ONCRETE EXCEPT WHERE

IGNED TO ALIGN WITH A BEST FIT
IELD VERIFY ALL CONTROLLING
FABRICATION OF ANY MATERIALS.
PLANS AND THE EXISTING STRUCTURE
FABRICATE ANY ELEMENTS UNTIL THE
CTURE GEOMETRY IS BASED ON LOCAL
UNDATION PLAN. THE I-15
MATION ONLY. ABUTMENT/PIER
GN ARE LISTED.

RADE ELEVATIONS ARE AT TOP OF CONCRETE.

BETWEEN C-342 AND C-342W AT BOTTOM OF
AMS AT FACE OF BENT #2, SEE
VE ELEVATION DIFFERENCES VARY BY MORE
NS ACCORDINGLY AND SUBMIT TO THE ENGINEER
MENTS IN THE FIELD.

R ADDITIONAL INFORMATION.

ICAL DIMENSIONS ARE PLUMB.

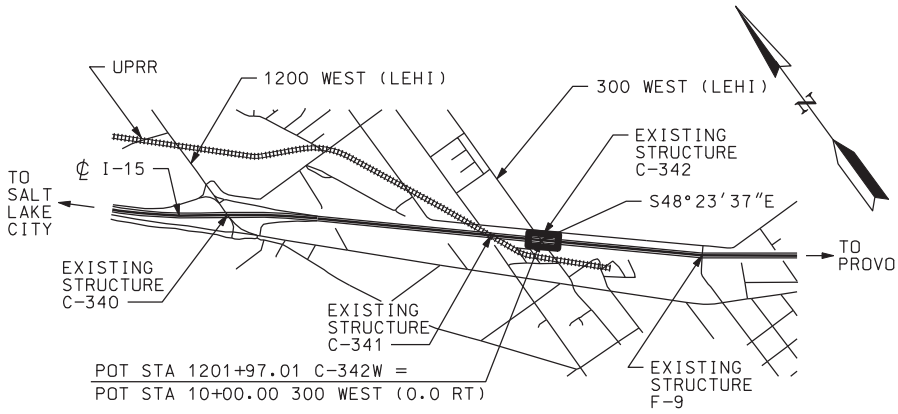


## LOCATION PLAN

## DESIGN DATA

HL-93 LOADING IN ACCORDANCE WITH AASHTO LRFD BRIDGE DESIGN SPECIFICATIONS 3rd EDITION, 2004. SEISMIC DESIGN PER NCHRP 12-49.

INVENTORY AND OPERATING RATINGS FOR HS20-44 ARE IN ACCORDANCE WITH THE AASHTO MANUAL FOR CONDITION ELEVATION OF BRIDGES, 2nd EDITION, AND THE 2001 AND 2003 INTERIM SPECIFICATIONS LOAD FACTOR METHOD. INVENTORY AND OPERATING RATINGS FOR HL-93 ARE IN ACCORDANCE WITH THE GUIDE MANUAL FOR CONDITION EVALUATION AND LOAD RESISTANCE FACTOR RATING (LRFR) OF HIGHWAY BRIDGES.

| | | OPERATING RATING | INVENTORY RATING |
|---|---|---|---|
| EXISTING GIRDERS: | (HS-20) | 2.31 | 1.38 |
| | (HL-93) | 1.96 | 1.52 |
| NEW GIRDERS: | (HL-93) | 2.30 | 1.77 |

CAST-IN-PLACE CONCRETE: f'c = 4000 PSI; fy (REINF) = 60 KSI

STRUCTURAL STEEL: Fy = 36 KSI MIN.

WEARING SURFACE: 5" ASPHALT (NOW) 58 PSF, 0 PSF FWS

DESIGN SPEED: I-15 = 70 M.P.H.; 300 WEST = 40 M.P.H.

SEISMIC: SEISMIC DESIGN PARAMETERS
(500 YR RETURN PERIOD, 10% PE IN 50 YR)
Ss = MAX CONSIDERED EQ GROUND MOTION
AT 0.2s = 0.48g
S1 = MAX CONSIDERED EQ GROUND MOTION
AT 1.0s = 0.16g
SITE CLASS D
EXISTING STRUCTURE ELEMENTS DO NOT
MEET THE SEISMIC DESIGN CRITERIA.

## INDEX OF SHEETS


1. SITUATION & LAYOUT 1
2. SITUATION & LAYOUT 2
3. UTILITIES
4. SOIL DATA SHEET
5. FOUNDATION PLAN
6. ABUTMENT PLAN & ELEVATION
7. ABUTMENT DETAILS
8. BENT PLAN & ELEVATION
9. BENT DETAILS
10. BENT FOOTING DETAILS
11. FRAMING PLAN
12. GIRDER DETAILS
13. DIAPHRAGM DETAILS 1
14. DIAPHRAGM DETAILS 2
15. BEARING DETAILS
16. DECK SLAB PLAN
17. DECK SECTIONS
18. SCREED ELEVATIONS
19. PARAPET DETAILS
20. PARAPET END DETAILS
21. APPROACH SLAB PLAN
22. APPROACH SLAB DETAILS
23. APPROACH SLAB DRAIN DETAILS
24. CONCRETE SLOPE PROTECTION
25. REINFORCING STEEL SCHEDULE 1
26. REINFORCING STEEL SCHEDULE 2


## QUANTITIES

| ITEM | EST | UNIT | AS CONSTR |
|---|---|---|---|
| GRANULAR BACKFILL BORROW (PLAN QUANTITY) | 185 | CU YD | |
| REINFORCING STEEL - COATED | 85,967 | LB | |
| STRUCTURAL CONCRETE (EST.QTY 450.7 C.Y.) | 1 | LUMP | |
| PREPARE BRIDGE FOR WIDENING | 1 | LUMP | |
| STRUCTURAL STEEL (EST QTY 85,540 LBS) | 1 | LUMP | |
| REPLACE CONCRETE SLOPE PROTECTION | 496 | SQ YD | |

| NO. | DATE | BY | REMARKS |
|---|---|---|---|

REVISIONS

UTAH DEPARTMENT OF TRANSPORTATION
SALT LAKE CITY, UTAH
STRUCTURES DIVISION

DESIGN KMR 09/04 CHECK PBB 09/04 CHECK PBB 09/04 CHECK JW 02/05
DRAWN BLP 09/04 QUANT. PBB 02/05

APPROVAL RECOMM. DATE SENIOR DESIGN ENGR.
APPROVED FOR USE BY UDOT DATE UDOT BRIDGE ENGR.

I-15; CORRIDOR IN UTAH COUNTY
LEHI 300 WEST OVERPASS
SITUATION & LAYOUT 1

PROJECT NUMBER SP-15-6(52)241

UTAH
COUNTY

C-342W
DRG. NO.

SHT. 1 OF 26

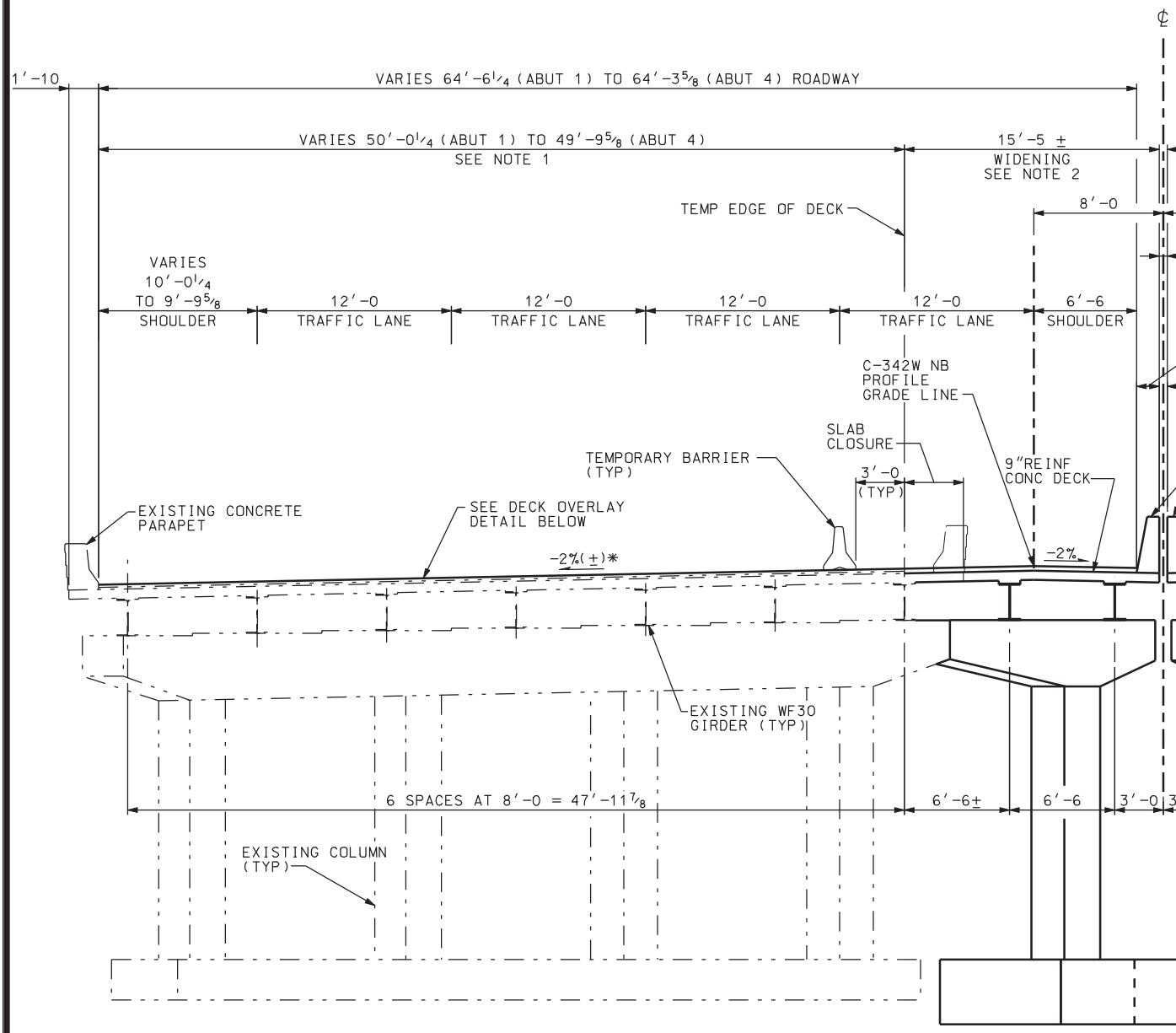


## SECTION THRU

* MATCH EXISTIN

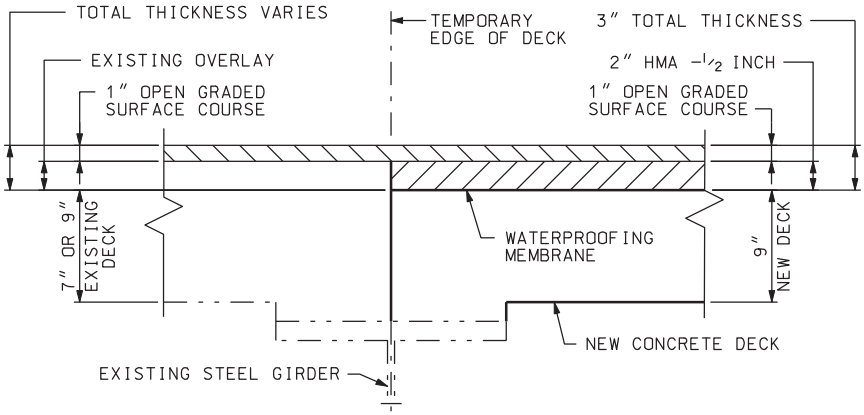


## DECK OVERLAY DETAIL

DGN File:IP_PWPcdnsl717\4433_C-342-02_SL02.dgn

02-MAY-2005

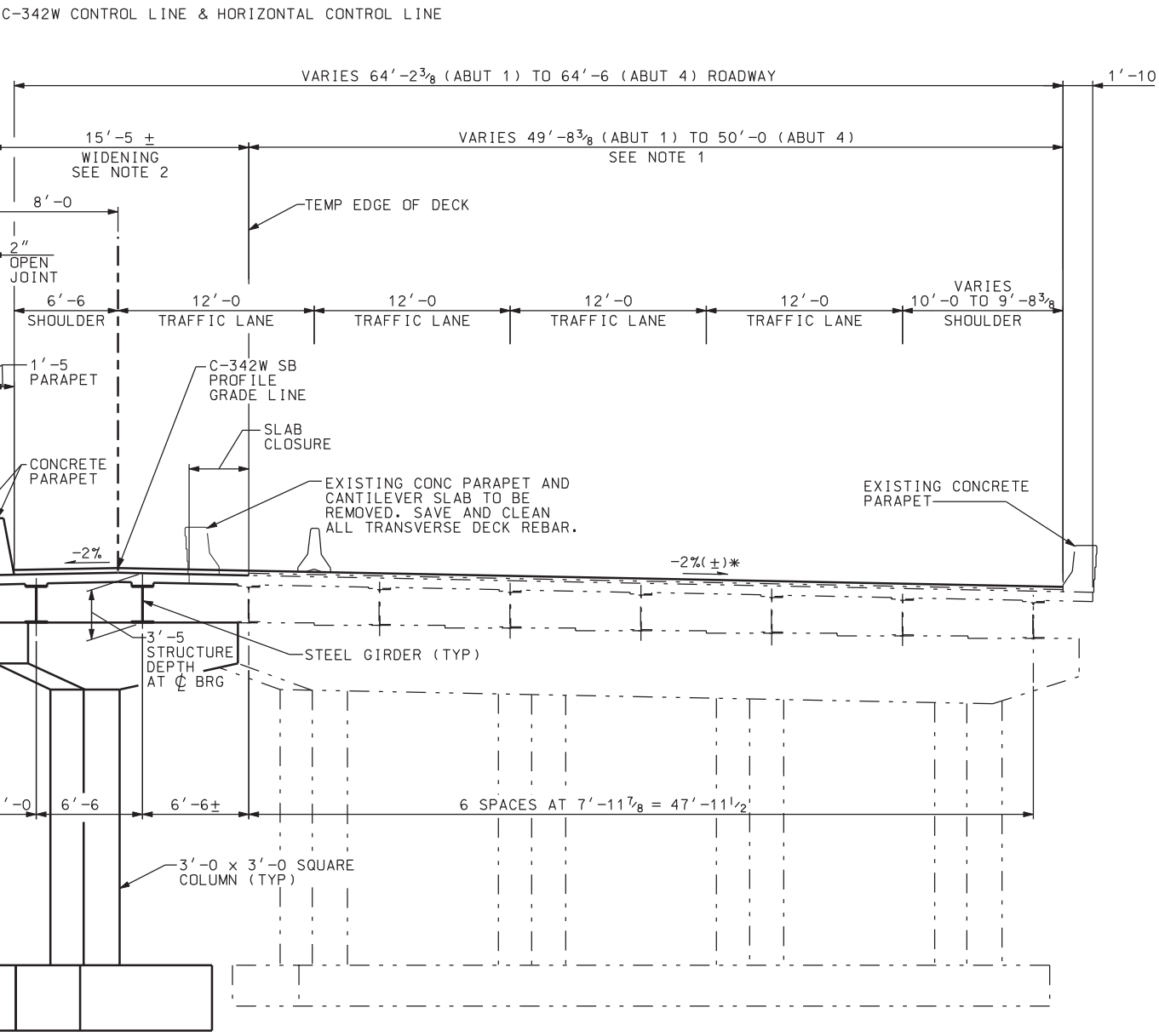


## STRUCTURE

NG CROSS SLOPE

## NOTES

1. PARTIALLY REMOVE EXISTING ASPHALT SURFACING OVERLAY. SEE M-91 SHEETS FOR TRANSITION AND REHABILITATION DETAILS.
2. APPLY WATERPROOFING MEMBRANE, PLACE 1" OPEN GRADED SURFACE COURSE AND 2" HMA -1/2 INCH - TOTAL THICKNESS= 3". SEE DECK OVERLAY DETAIL AND M-91 SHEETS.
3. PROFILE GRADE LINE IS TAKEN AT TOP OF NEW CONCRETE DECK.

| NO. | DATE | BY | REMARKS |
|---|---|---|---|

REVISIONS

UTAH DEPARTMENT OF TRANSPORTATION
SALT LAKE CITY, UTAH
STRUCTURES DIVISION

DESIGN KMR 09/04 CHECK PBB 09/04
DRAWN BLP 09/04 CHECK PBB 09/04
QUANT. CHECK

APPROVAL RECOMM. DATE SENIOR DESIGN ENGR.
APPROVED FOR USE BY UDOT DATE UDOT BRIDGE ENGR.

I-15; CORRIDOR IN UTAH COUNTY
LEHI 300 WEST OVERPASS
SITUATION & LAYOUT 2
PROJECT NUMBER SP-15-6(52)241

UTAH
COUNTY

C-342W
DRG. NO.

SHT. 2 OF 26

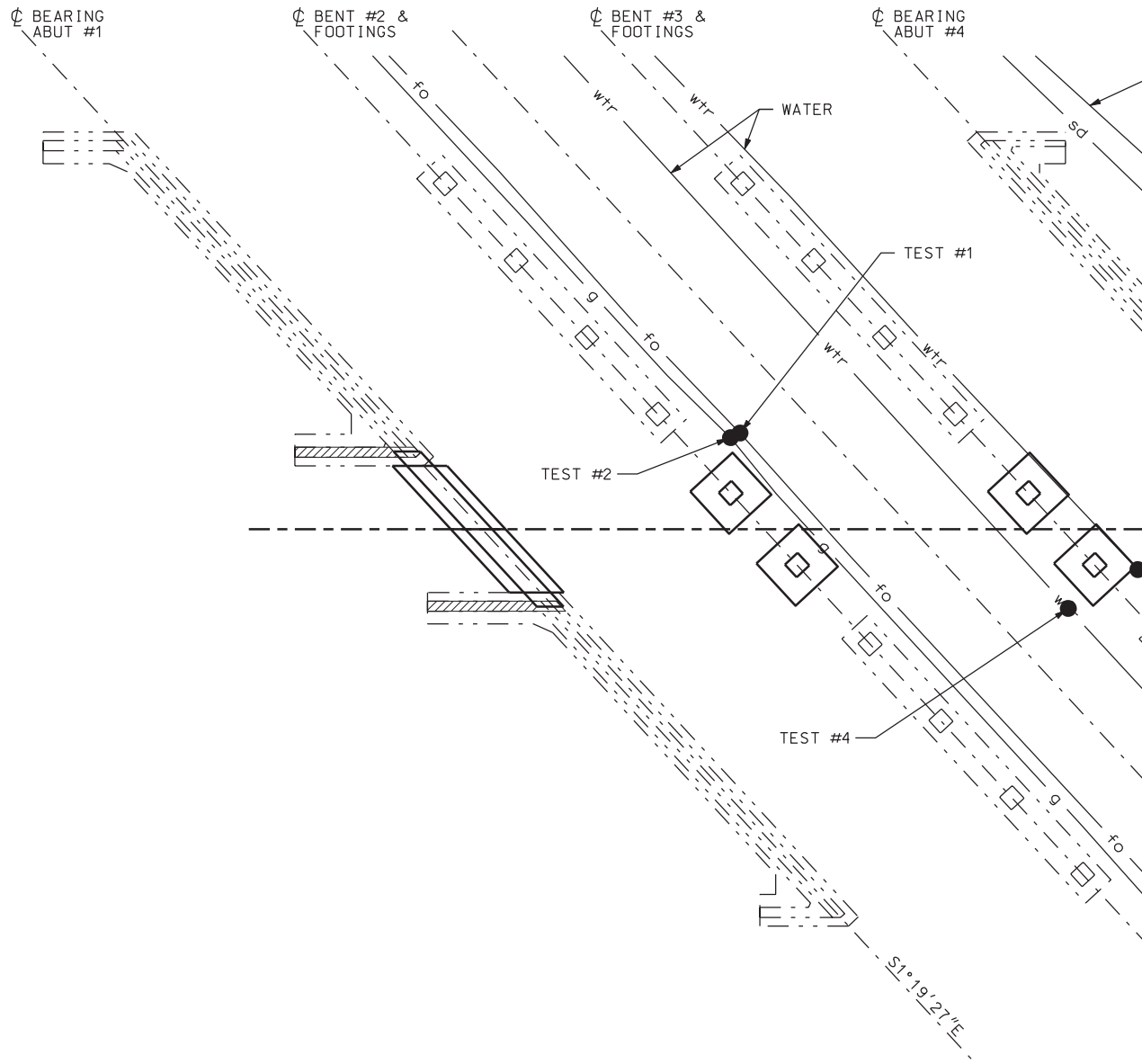


## PLAN

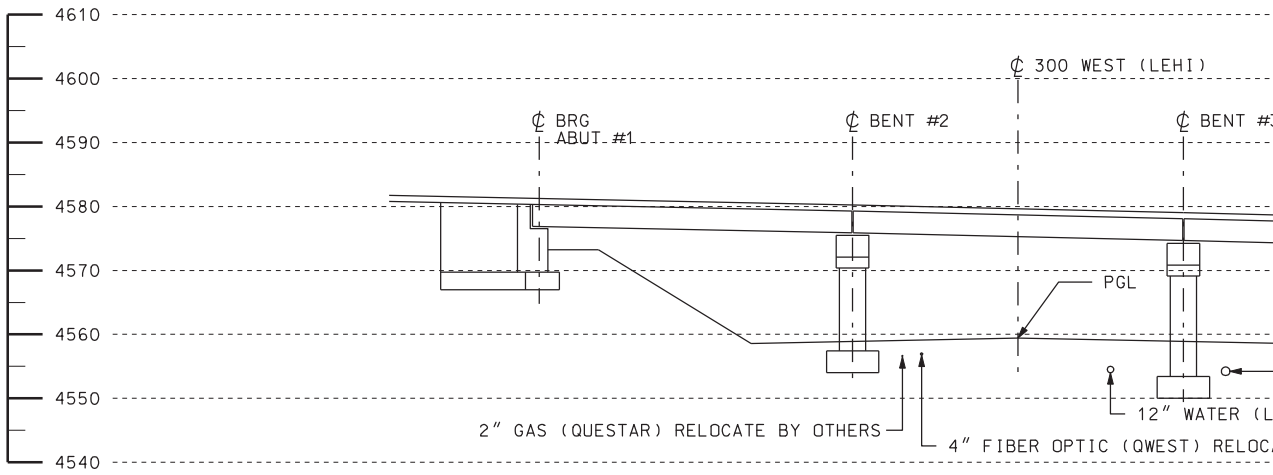


## ELEVATION

TAKEN AT ℄ C-342W

DGN File:IP_PWPrdms1717\4433_C-342-03_UTIL01.dgn

02-MAY-2005

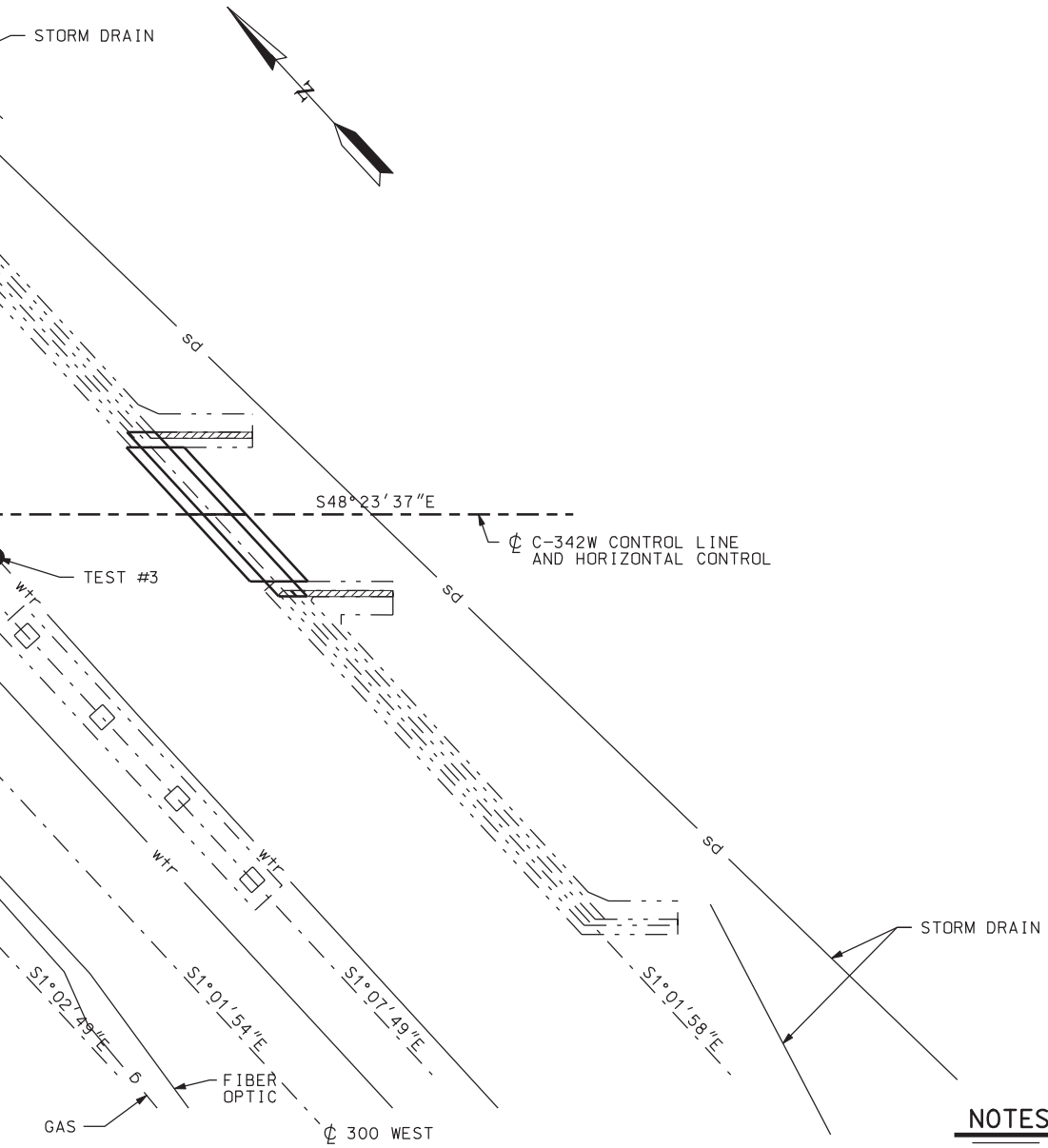


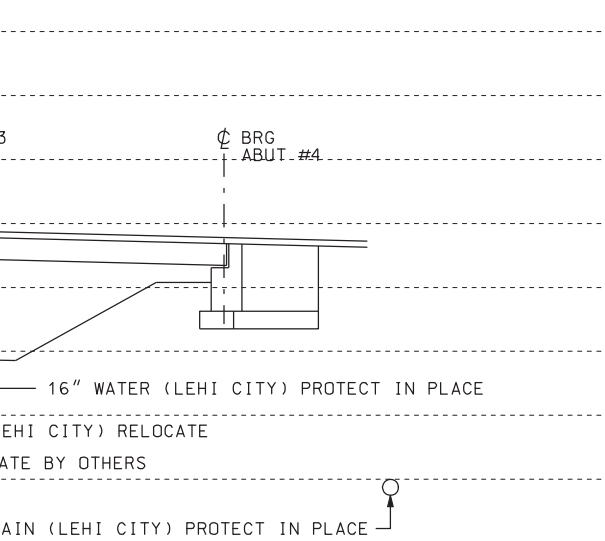


## NOTES

1. SEE ROADWAY DRAWINGS FOR UTILITY CONTACT LIST.
2. UTILITIES SHOWN AT ELEVATION 4520 ARE AT AN UNDETERMINED ELEVATION. VERIFY ACTUAL ELEVATIONS OF THESE UTILTIES ONLY AS NECESSARY.
3. PROTECT IN PLACE ALL UTILITIES LABELED AS SUCH. REPAIR OR REPLACE DISTURBED OR DAMAGED UTILITIES AT THE DISCRETION OF THE UTILITY OWNER AT NO COST TO THE DEPARTMENT.
4. UTILITIES DESIGNATED AS "RELOCATE" ARE THE DESIGN-BUILD RESPONSIBILITY OF THE CONTRACTOR. REFER TO UTILITY RELOCATION (DESIGN-BUILD) SPECIFICATION 0007285.
5. SEE UT 4 FOR UTILITIES DATA NOT SHOWN.

## LEGEND

| | |
|---|---|
| —— g —— | EXISTING BURIED GAS |
| —— fo —— | EXISTING FIBER OPTIC |
| —— sd —— | EXISTING STORM DRAIN |
| —— wtr —— | EXISTING WATER |

| NO. | DATE | BY | REMARKS |
|---|---|---|---|
| | | | |

REVISIONS

UTAH DEPARTMENT OF TRANSPORTATION
SALT LAKE CITY, UTAH
STRUCTURES DIVISION

DESIGN JW 03/04 CHECK PBB 03/04
DRAWN RDF 03/04 CHECK PBB 03/04
QUANT. CHECK

APPROVAL RECOMM. DATE SENIOR DESIGN ENGR.
APPROVED FOR USE BY UDOT DATE UDOT BRIDGE ENGR.

I-15; CORRIDOR IN UTAH COUNTY
LEHI 300 WEST OVERPASS
UTILITIES

PROJECT NUMBER SP-15-6(52)241

UTAH
COUNTY

C-342W
DRG. NO.

SHT. 3 OF 26

# DRILL HOLE LOG

## BORING NO. 04-1

Sheet: 1 of 1

PROJECT: I-15, CORRIDOR IN UTAH COUNTY - STRUCTURE C342 PROJECT NO.: 200401.045
CLIENT: UTAH DEPARTMENT OF TRANSPORTATION DATE: 8/13/04
LOCATION: SEE SITE PLAN: N 120169, E 176376 ELEVATION: 4559.3'
DRILLER: B. HARTLEY, A. HARTVIGSEN LOGGED BY: M.H., V.N.B.
EQUIP./DRILL METHOD: CME-55 / N.W. CASING
DEPTH TO WATER - INITIAL: ▽ 19.2' AFTER 24 HOURS: ▽ 19.0' 8/27/04

| Elev. (Feet) | Depth (Feet) | Lithology | Sample Type | Rec. (In.) | Blows Per 6" & Torvane (tsf) | USCS (AASHTO) | Material Description | Dry Density, pcf | Moisture Content, % | Atter. Liquid Limit, % | Atter. Plasticity Index, % | Gradation Gravel, % | Gradation Sand, % | Gradation Silt/Clay, % | Other Tests |
|---|---|---|---|---|---|---|---|---|---|---|---|---|---|---|---|
| | | | | 10 | 4,6,7 | SM | lt. brown, dry, med. dense | | | | | | | | |
| 4555 | 5 | | | - | 6,7,10 | SM (A-3) | lt. brown, dry to moist, med. dense — SILTY SAND | | 4.6 | | NP | 0 | 76 | 24 | |
| | | | | - | 7,9,9 | SP-SM | lt. brown, dry to moist, med. dense | | | | | | | | |
| 4550 | 10 | | | - | 8,10,11 | SM | lt. brown, dry to moist, med. dense — POORLY GRADED SAND W/SILT | | | | | | | | |
| | | | | - | 8,10,9 | SM (A-4(3) | brown, dry to slightly moist, med. dense — SILTY SAND | | 16.5 | | NP | 0 | 53 | 47 | |
| 4545 | 15 | | | 12 | 5,5,6 | SM | brown, wet, med. dense | | | | | | | | |
| 4540 | 20 | | | 13 | 7,8,14 | SM (A-4) | brown, wet, med. dense, gray — INTERBEDDED SILTY SAND W/VERY SILTY VERY FINE SAND: fine to med. grained, some sandy silt lenses, some mica flakes, few ~1" clay layers | | 22.7 | | NP | 0 | 64 | 36 | |
| 4535 | 25 | | | 12 | 13,15,19 | SP-SM | gray-brown, wet, dense — POORLY GRADED SAND: fine to coarse, some gravel | | | | | | | | |
| 4530 | 30 | | | 16 | 13,13,16 | SM | gray-brown, wet, med. dense — SILTY SAND | | | | | | | | |

# DRILL HOLE LOG

## BORING NO. 04-3

Sheet: 1 of 1

PROJECT: I-15, CORRIDOR IN UTAH COUNTY - STRUCTURE C342 PROJECT NO.: 200401.045
CLIENT: UTAH DEPARTMENT OF TRANSPORTATION DATE: 8/20/04
LOCATION: SEE SITE PLAN: N 120087, E 176423 ELEVATION: 4578.2'
DRILLER: D. SAMPSON, A. HARTVIGSEN LOGGED BY: M.H., V.N.B.
EQUIP./DRILL METHOD: CME-55 / N.W. CASING
DEPTH TO WATER - INITIAL: ▽ DRY AFTER 24 HOURS: ▽ NOT MEASURED

| Elev. (Feet) | Depth (Feet) | Lithology | Sample Type | Rec. (In.) | Blows Per 6" & Torvane (tsf) | USCS (AASHTO) | Material Description | Dry Density, pcf | Moisture Content, % | Atter. Liquid Limit, % | Atter. Plasticity Index, % | Gradation Gravel, % | Gradation Sand, % | Gradation Silt/Clay, % | Other Tests |
|---|---|---|---|---|---|---|---|---|---|---|---|---|---|---|---|
| | | | | | | | 10" ASPHALT | | | | | | | | |
| | | | | | | | 9" CONCRETE | | | | | | | | |
| 4575 | | | | 13 | 6,7,6 | SM | brown, moist, med. dense — SILTY SAND | | | | | | | | |
| | 5 | | | 18 | 6,10,12 | SM (A-4(2)) | brown, slightly moist, med. dense — SILTY SAND W/SANDY SILT LAYERS 1" TO 2" THICK 3" TO 4" APART, W/MANY CLAY LENSES & TRACE OF GRAVEL | | 12.6 | | NP | 3 | 52 | 45 | |
| 4570 | 10 | | | 15 | 19,27,29 | SM | brown, slightly moist, very dense — SILTY SAND W/TRACE OF GRAVEL (fill) | | | | | | | | |
| 4565 | | | | 9 | 13,16,7 | SM | brown | | | | | | | | |
| | 15 | | | | | SM | dk. gray, moist, med. dense — SILTY SAND | | | | | | | | |
| | | | | 11 | 3,6,9 | SM (A-1-b) | brown, slightly moist, med. dense — SILTY SAND W/GRAVEL & W/SANDY SILT LAYERS | | 9.6 | | NP | 26 | 53 | 21 | |
| 4560 | 20 | | | 6 | 7,7,9 | SP-SM | brown, moist, med. dense, coarse grained — POORLY GRADED SAND W/SILT (fill) | | | | | | | | |
| 4555 | | | | 16 | 15,11,9 | SM | brown, moist, med. dense | | | | | | | | |
| | 25 | | | 15 | 7,9,11 | SM (A-3) | brown, slightly moist to dry, med. dense — SILTY SAND | | 18.6 | | NP | 0 | 79 | 21 | |
| 4550 | 30 | | | 11 | 7,11,13 | SM | brown, moist, med. dense, w/rusty silt lenses | | | | | | | | |

# DRILL HOLE

## BORING NO.

Sheet: 1 of 1

| Elev. (Feet) | Depth (Feet) | Lithology |
|---|---|---|
| 4560 | | |
| 4555 | 5 | |
| 4550 | 10 | |
| 4545 | 15 | |
| 4540 | 20 | |
| 4535 | 25 | |
| 4530 | 30 | |
| 4525 | 35 | |
| 4520 | 40 | |

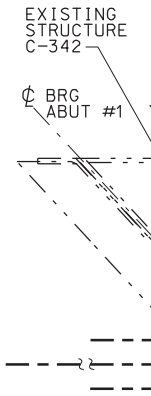


DGN File: IP_PWPcdns1717\4433_C-342-04 soil data 1.dgn

02-MAY-2005

# LOG

04–2

PROJECT: I-15, CORRIDOR IN UTAH COUNTY - STRUCTURE C342 PROJECT NO.: 200401.045
CLIENT: UTAH DEPARTMENT OF TRANSPORTATION DATE: 8/13/04
LOCATION: SEE SITE PLAN: N 120177, E 176336 ELEVATION: 4560.1'
DRILLER: B. HARTLEY, A. HARTVIGSEN LOGGED BY: M.H., V.N.B.
EQUIP./DRILL METHOD: CME-55 / N.W. CASING
DEPTH TO WATER - INITIAL: ▽ 19.5' AFTER 24 HOURS: ▽ 20.0' 8/27/04

| SAMPLE Type | Rec. (in.) | Blows Per 6" & Torvane (tsf) | USCS (AASHTO) | Material Description | | Dry Density, pcf | Moisture Content, % | Atter. Liquid Limit, % | Atter. Plasticity Index, % | Gradation Gravel, % | Gradation Sand, % | Gradation Silt/Clay, % | Other Tests |
|---|---|---|---|---|---|---|---|---|---|---|---|---|---|
| | 10 | 9,5,7 | SM | lt. brown, dry, med. dense | SILTY SAND W/SOME GRAVEL | | | | | | | | |
| | 16 | 10,11,12 | SP-SM | lt. brown, dry, med. dense | POORLY GRADED SAND W/SILT | | | | | | | | |
| | 18 | 6,7,8 | SM (A-3) | lt. brown, dry, med. dense | SILTY SAND | | 4.1 | | NP | 5 | 82 | 13 | |
| | 18 | 7,9,9 | SP-SM | lt. brown, dry, med. dense | SILTY SAND W/SANDY SILT LENSES & LAYERS | | | | | | | | |
| | 13 | 8,9,12 | SM | lt. brown, dry to slightly moist, med. dense | | | | | | | | | |
| | 14 | 3,4,8 | SM (A-2-4) | brown, slightly moist to wet, med. dense | SILTY SAND | | 10.5 | | NP | 2 | 64 | 34 | |
| | 13 | 4,4,8 | SM | lt. brown, wet, med. dense | SILTY SAND W/VERY SILTY VERY FINE SAND LENSES trace of coarse sand | | | | | | | | |
| | 13 | 9,17,13 | SM (A-2-4) | brown, wet, med. dense | | | 19.3 | | NP | 1 | 68 | 31 | |
| | 13 | 12,16,17 | SP-SM | brown, wet, dense | POORLY GRADED SAND W/SILT | | | | | | | | |
| | | | | 1" clay layer at 34' | | | | | | | | | |
| | 12 | 11,22,18 | SM | gray, wet, dense | SILTY SAND | | | | | | | | |
| | | | SP-SM | brown, wet, dense | POORLY GRADED SAND W/SILT | | | | | | | | |
| | - | 11,13,13 | SM | brown-gray, wet, med. dense | SILTY SAND | | | | | | | | |

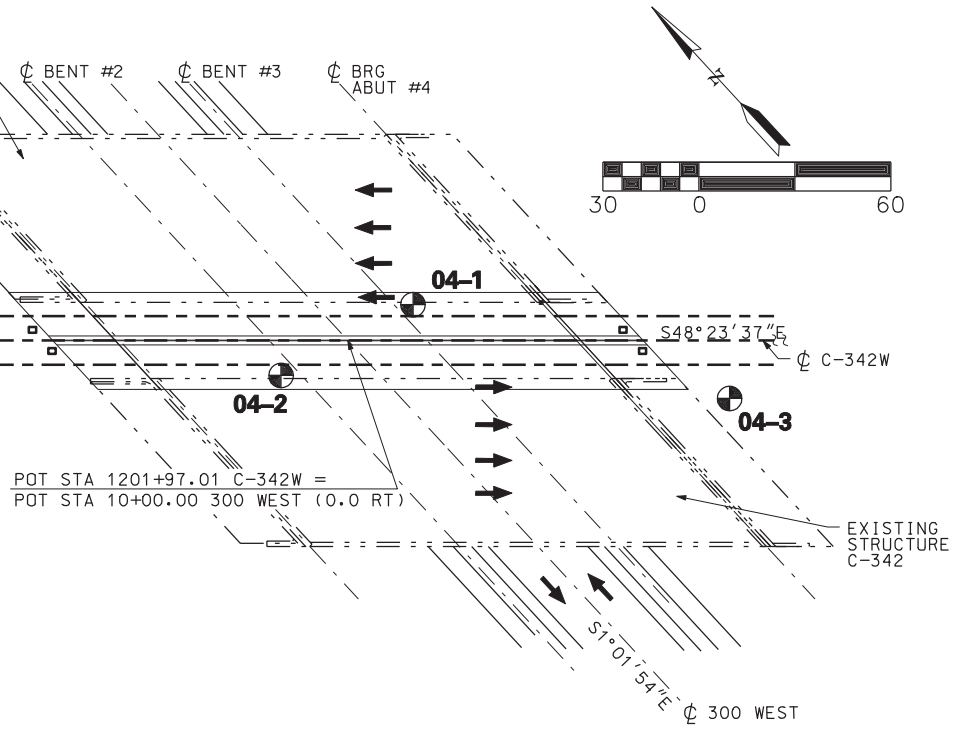


## LOCATION PLAN

# KEY TO BORING LOG

## SYMBOLS

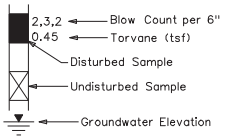


UC = Unconfined Compression Test
CT = Consolidation Test
SG = Specific Gravity Test
DS = Direct Shear Test

## RELATIVE DENSITY (NON-PLASTIC - SAND & SILT)

VERY LOOSE N<4
LOOSE N 4-10
MED DENSE N 10-30
DENSE N 30-50
VERY DENSE N>50

## CONSISTENCY (PLASTIC - SILT & CLAY)

VERY SOFT N<2
SOFT N 2-4
MEDIUM STIFF N 4-8
STIFF N 8-15
VERY STIFF N 15-30
HARD N>30

## GENERAL NOTES

1. THE SUBSURFACE EXPLORATIONS SHOWN WERE CONDUCTED BETWEEN 08-13-04 AND 08-20-04 BY RB&G ENGINEERING, INC..
2. THESE BORING LOGS REPRESENT A SYNOPSIS OF THE SOIL DEPOSITS ENCOUNTERED WITHIN EACH BORING AND ARE BASED ON SOUND GEOLOGICAL AND ENGINEERING JUDGMENT. BECAUSE SOIL IS A COMPLEX MEDIUM, THESE BORING LOGS MAY OR MAY NOT REPRESENT THE SOIL CONDITIONS AT THIS SITE. THIS SUBSURFACE INTERPRETATION IS PRESENTED IN GOOD FAITH AND IS NOT INTENDED AS A SUBSTITUTE FOR PERSONAL INVESTIGATION AND JUDGEMENT OF THE CONTRACTOR.
3. THE WATER LEVELS AND CONDITIONS INDICATED ON THE BORING LOGS REPRESENT HOLE CONDITIONS ON THE DATE SHOWN, HOWEVER, IT SHOULD BE NOTED, THAT AT LOCATIONS AWAY FROM THE BORINGS OR AT ANOTHER TIME THE WATER LEVELS AND CONDITIONS MAY VARY SIGNIFICANTLY.
4. THE STRATIFICATION LINES REPRESENT THE APPROXIMATE BOUNDARIES BETWEEN SOIL TYPES AND THE TRANSITION MAY BE GRADUAL.
5. COBBLE - A ROCK WITH AN AVERAGE DIMENSION BETWEEN 3 INCHES AND 12 INCHES
6. BOULDER - A ROCK WITH AN AVERAGE DIMENSION OF 12 INCHES OR GREATER

NOTE: DRILL RIG USED - CME 55
HAMMER E=0.75

GEOTECHNICAL ENGINEER

| NO. | DATE | BY | REMARKS |
|---|---|---|---|
| | | | |

REVISIONS

UTAH DEPARTMENT OF TRANSPORTATION
SALT LAKE CITY, UTAH
STRUCTURES DIVISION

RB&G ENGINEERING INC.

DESIGN BEP 10/04 CHECK
DRAWN JPN 10/04 CHECK
QUANT. CHECK

APPROVAL RECOMM. DATE SENIOR DESIGN ENGR.
APPROVED FOR USE BY UDOT DATE UDOT BRIDGE ENGR.

I-15; CORRIDOR IN UTAH COUNTY
LEHI 300 WEST OVERPASS
SOIL DATA SHEET
PROJECT NUMBER SP-15-6(52)241

UTAH
COUNTY

C-342W
DRG. NO.

SHT. 4 OF 26

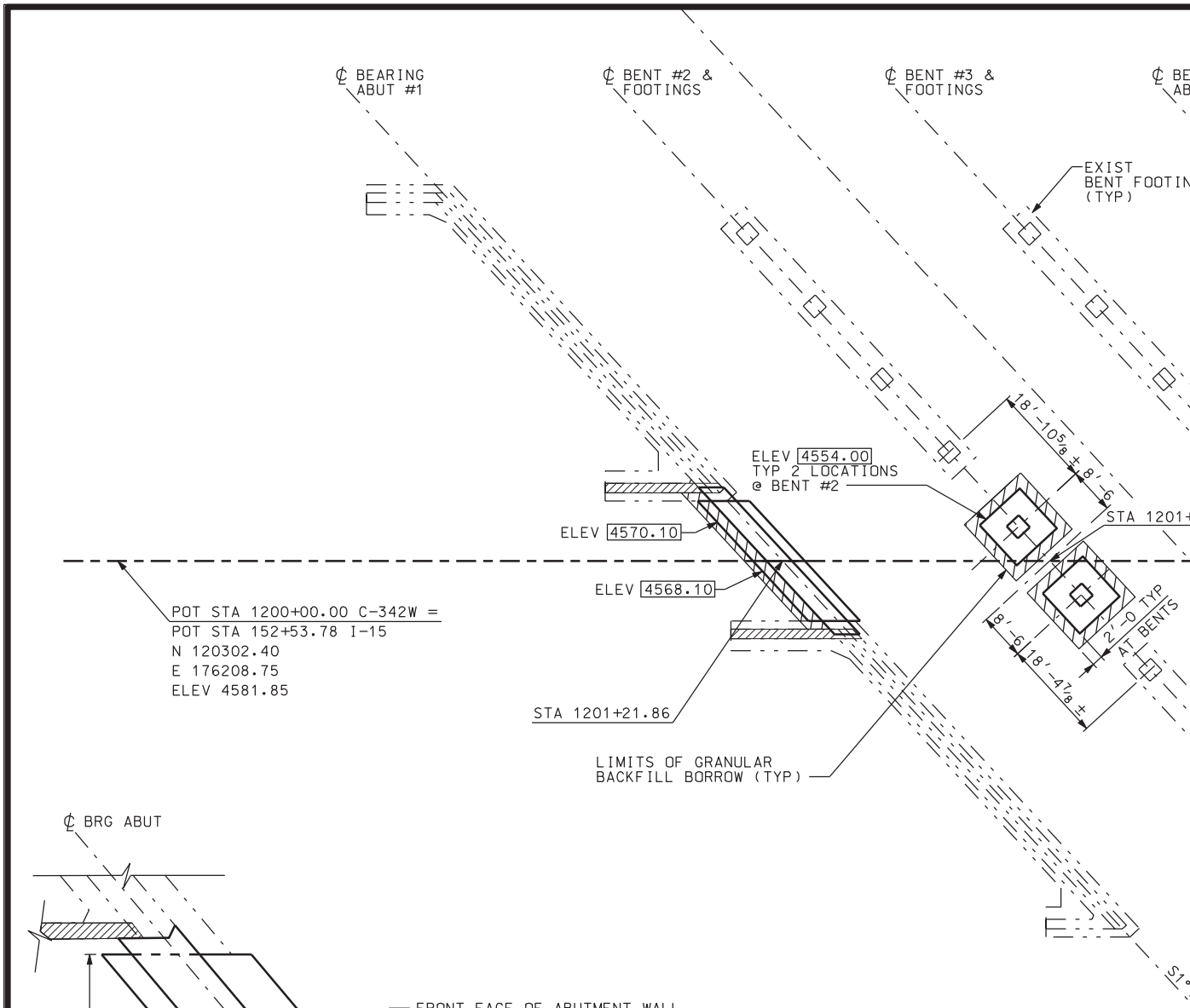


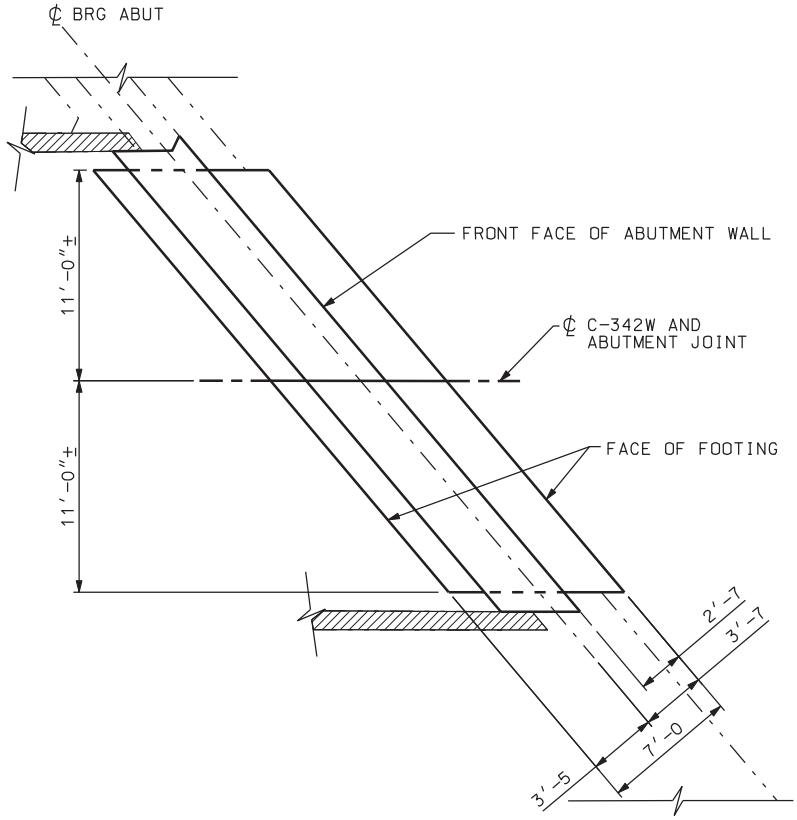


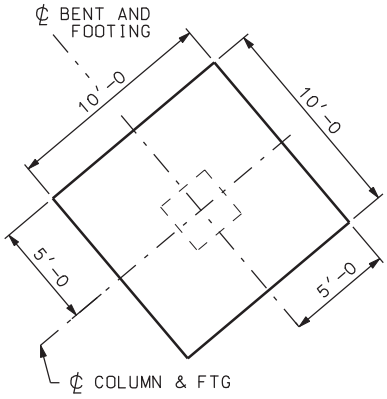


FOUN

## FOOTING LAYOUT FOR ABUTMENTS #1 & #4

DETAIL

2 LOCATIONS

## FOOTING LAYOUT FOR BENTS #2 & #3

DETAIL

4 LOCATIONS

DGN File: IP_PWPcdms1717\4433_C-342-05_FOUN01.dgn

02-MAY-2005

| CONTROL POINTS | | | |
|---|---|---|---|
| POINTS | N | E | ELEV |
| CP-C342-1 | 120416.65 | 176380.90 | 4569.45 |
| CP-C342-2 | 120018.09 | 176424.32 | 4575.96 |
| CP-C342-3 | 119908.21 | 176331.20 | 4556.36 |

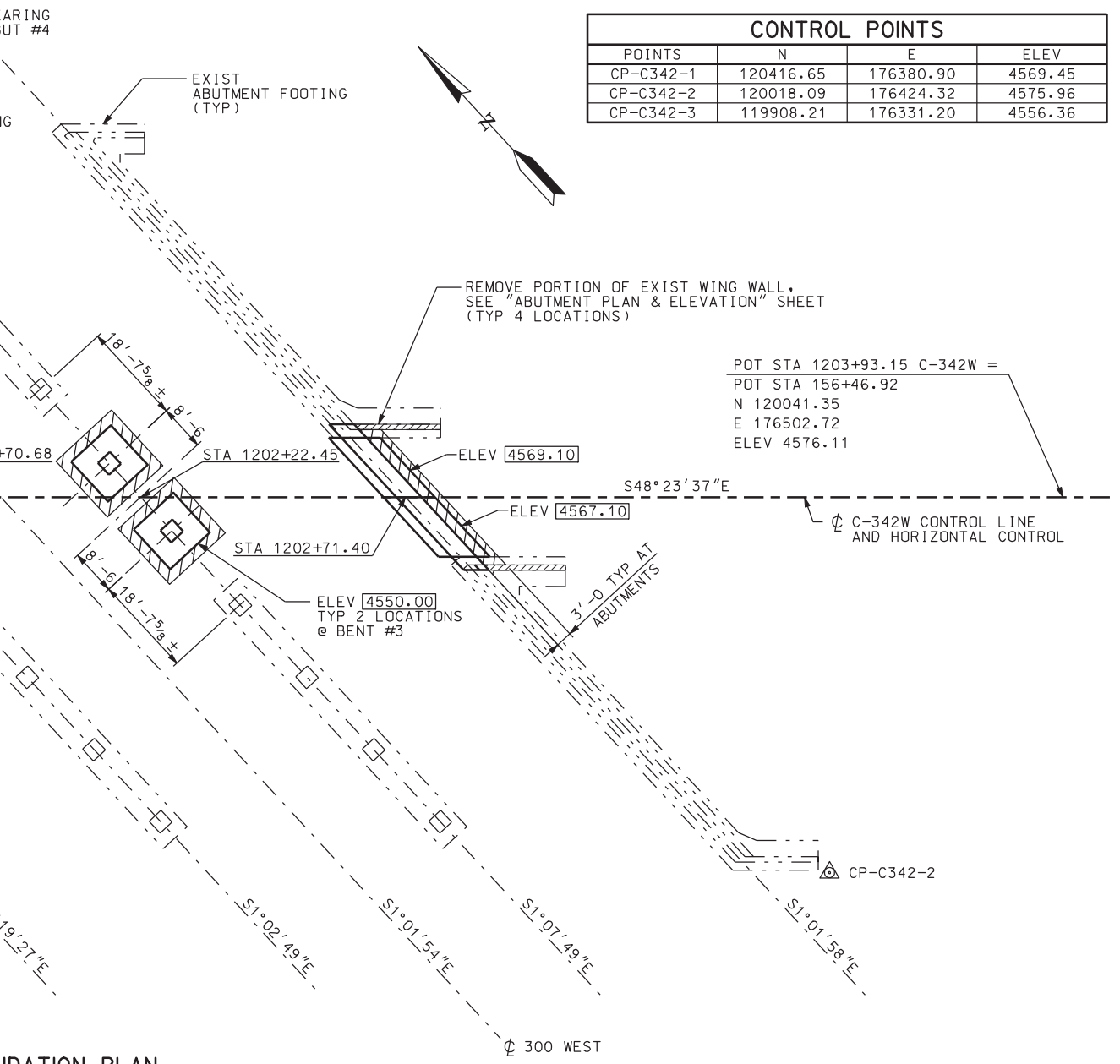


NDATION PLAN

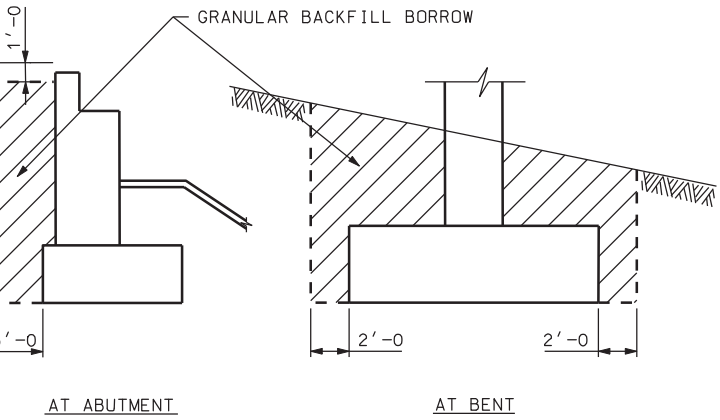


LIMITS OF GRANULAR BACKFILL BORROW

## NOTES

1. ELEVATIONS AT THE BOTTOM OF FOOTING ARE SHOWN ENCLOSED IN RECANGLES E.G. 4501.00 .
2. LOCATE ℄ NEW COLUMNS ON THE "BEST FIT" LINE BETWEEN EXISTING COLUMNS.
3. ALIGN FRONT FACE OF ABUTMENT WALL ON THE "BEST FIT" LINE BETWEEN FRONT FACES OF THE EXISTING ABUTMENT WALLS.
4. GRANULAR BACKFILL BORROW HEIGHT IS COMPUTED FROM THE BOTTOM OF THE ABUTMENT TO THE BOTTOM OF THE APPROACH SLAB.
5. PROVIDE SOIL COVER OF MINIMUM 2'-0 FOR ALL FOOTINGS.
6. FIELD VERIFY NORTHING AND EASTING OF ALL CONTROL POINTS AS WELL AS THE RELATIVE ELEVATION DIFFERENCES BETWEEN ALL CONTROL POINTS. IF THE NORTHING, EASTING OR RELATIVE ELEVATION DIFFERENCES VARY BY MORE THAN ± 1" FROM WHAT IS GIVEN ON THIS SHEET, REPORT DISCREPANCIES TO THE ENGINEER AND STOP ALL CONSTRUCTION UNTIL DISCREPANCIES ARE RESOLVED.
7. BOTTOM OF FOOTING ELEVATIONS SHOWN AT ABUTMENTS ARE SHOWN AS REFERENCE. MATCH BOTTOM OF NEW ABUTMENT FOOTING WITH EXISTING.
8. FOR SPREAD FOOTINGS PLACED ON EXISTING SUBGRADE MATERIAL, SCARIFY THE UPPER 10 INCHES BELOW THE FOOTING ELEVATION, MOISTURE CONDITION, AND RECOMPACT TO AT LEAST 96% OF THE MAXIMUM LABORATORY DENSITY AS REQUIRED BY UDOT STANDARD SPECIFICATIONS SECTION 02324.

| NO. | DATE | BY | REMARKS |
|---|---|---|---|

REVISIONS

UTAH DEPARTMENT OF TRANSPORTATION
SALT LAKE CITY, UTAH
STRUCTURES DIVISION

DESIGN KMR 09/04 CHECK PBB 09/04
DRAWN BLP 09/04 CHECK PBB 09/04
QUANT. CHECK

APPROVAL RECOMM. DATE SENIOR DESIGN ENGR.
APPROVED FOR USE BY UDOT DATE UDOT BRIDGE ENGR.

I-15; CORRIDOR IN UTAH COUNTY
LEHI 300 WEST OVERPASS
FOUNDATION PLAN
PROJECT NUMBER SP-15-6(52)241

UTAH
COUNTY

C-342W
DRG. NO.

SHT. 5 OF 26

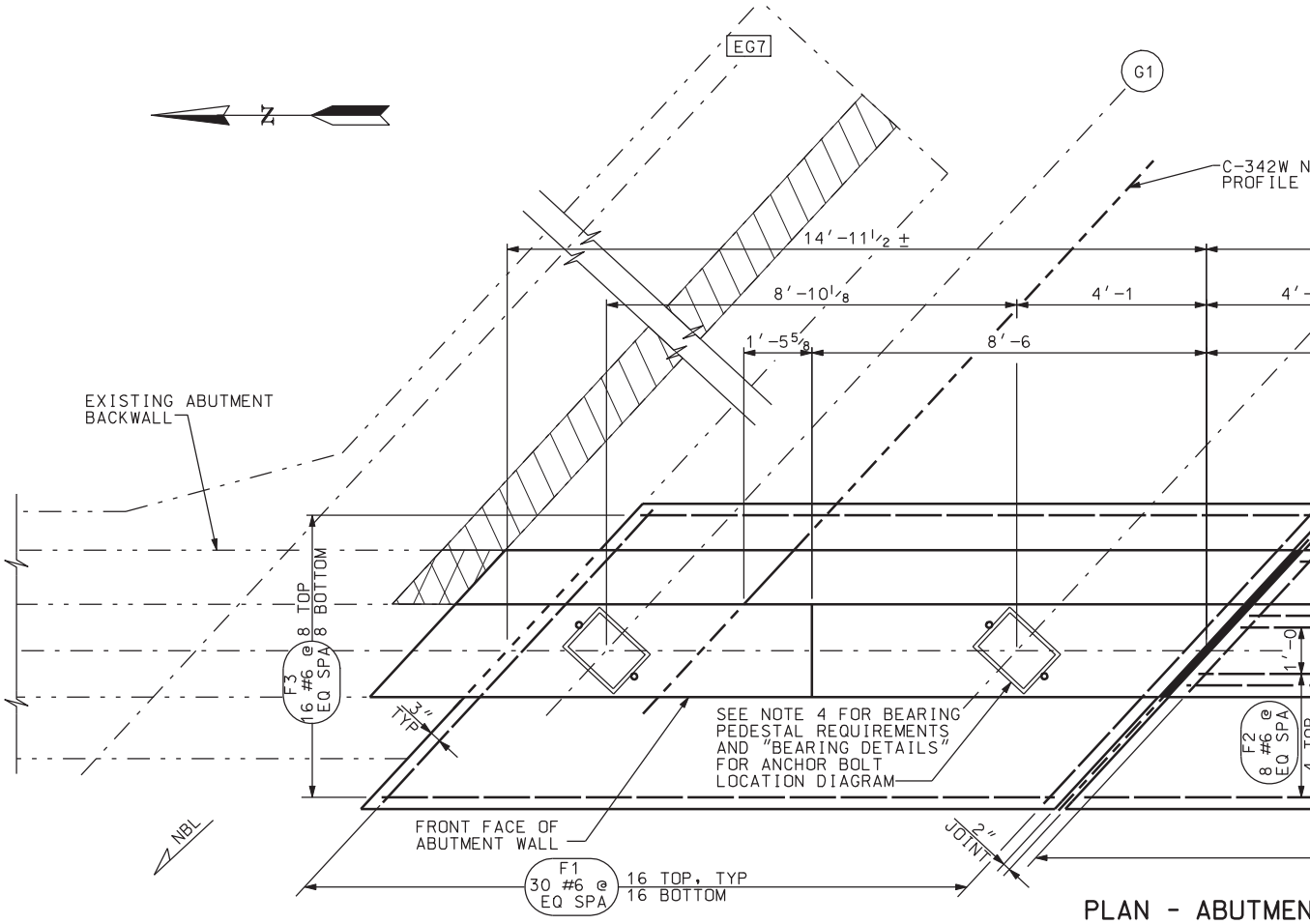


## PLAN - ABUTMEN

SEE NOTE 5

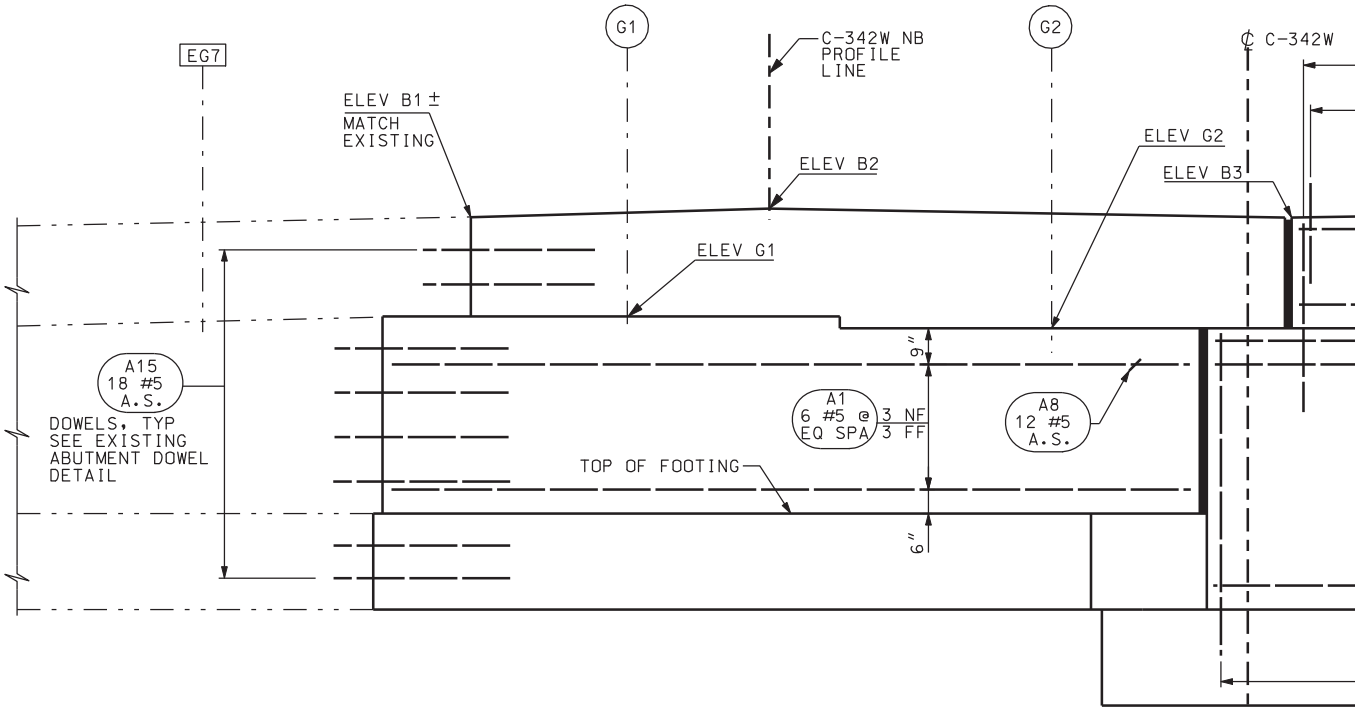


## ELEVATION

SEE N

## ELEVATION SCHEDULE (SEE NOTE 4)

| | ELEV G1 | ELEV G2 | ELEV G3 | ELEV G4 | ELEV B1 | ELEV B2 | ELEV B3 | ELEV B4 | ELEV B5 |
|---|---|---|---|---|---|---|---|---|---|
| ABUT #1 | 4577.28 | 4577.14 | 4577.08 | 4577.07 | 4579.56 | 4579.81 | 4579.74 | 4579.98 | 4579.90 |
| ABUT #4 | 4575.15 | 4574.98 | 4574.88 | 4574.85 | 4577.77 | 4577.81 | 4577.52 | 4577.55 | 4577.25 |

DGN File:IP_PWPcdms1717\4433_C-342-06_ABUT01.dgn
02-MAY-2005

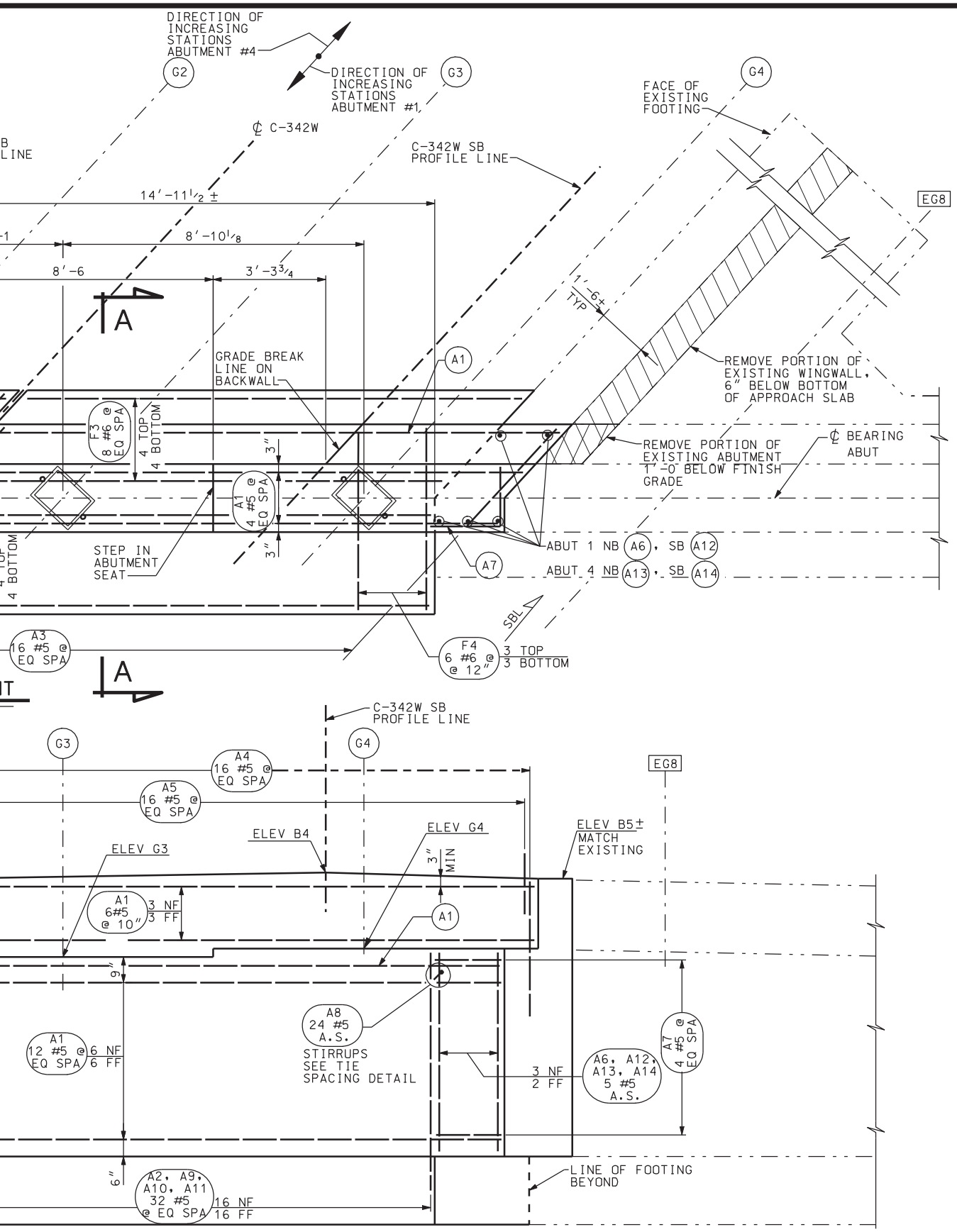


## - ABUTMENT

NOTE 5

## NOTES

1. FOR SECTIONS AND DETAILS, SEE "ABUTMENT DETAILS" SHEET.
2. FOR BEARING AND ANCHOR BOLT DETAILS, SEE "BEARING DETAILS".
3. NF INDICATES NEAR FACE; FF INDICATES FAR FACE. A.S. INDICATES AS SHOWN.
4. PROVIDE BEARING PEDESTAL 1'-6 x 1'-2 AT EACH BEARING LOCATION. FINISH THE CONCRETE HIGH. RUB OR GRIND THE PEDESTAL SMOOTH AND LEVEL TO THE SPECIFIED HEIGHT.
5. ABUTMENT 4 IS SHOWN, ABUTMENT 1 IS SIMILAR. WALL REINFORCING SHOWN FOR SOUTH WIDENING APPLIES IN A SIMILAR MANNER TO THE NORTH WIDENING.

| QUANTITIES STRUCTURAL CONCRETE | |
|---|---|
| ABUTMENT 1 & 4 | 81.1 CY |

| NO. | DATE | BY | REMARKS |
|---|---|---|---|
| | | | |

REVISIONS

UTAH DEPARTMENT OF TRANSPORTATION
SALT LAKE CITY, UTAH
STRUCTURES DIVISION

DESIGN KTF 10/04 CHECK JAR 12/04
DRAWN BLP 10/04 CHECK JAR 12/04
QUANT. KTF 10/04 CHECK JAR 12/04

APPROVAL RECOMM. DATE SENIOR DESIGN ENGR.
APPROVED FOR USE BY UDOT DATE UDOT BRIDGE ENGR.

I-15; CORRIDOR IN UTAH COUNTY
LEHI 300 WEST OVERPASS
ABUTMENT PLAN & ELEVATION

PROJECT NUMBER SP-15-6(52)241

UTAH COUNTY

C-342W DRG. NO.

SHT. 6 OF 26

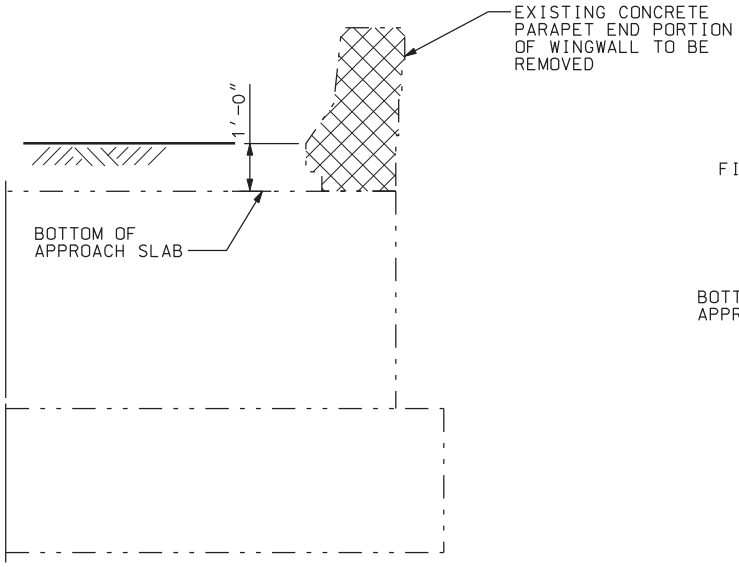


SECTION AT BACKWALL

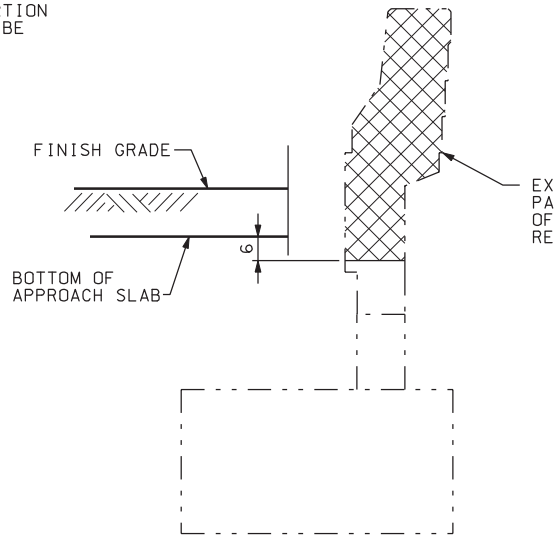


SECTION BEHIND BACKWALL

## WINGWALL REMOVAL DETAILS

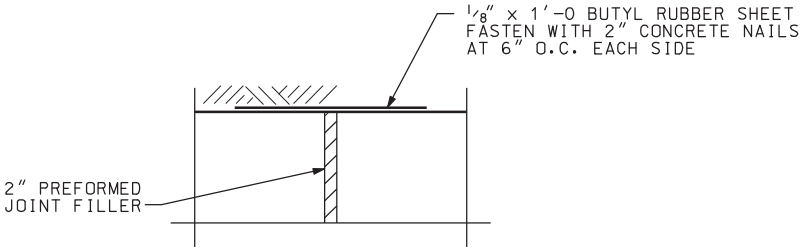


## CONTRACTION JOINT DETAIL

USE RUBBER SHEET ON FACES OF JOINT IN CONTACT WITH SOIL

## EPOXY ANCHORAGE NOTE

USE APPROVED EPOXY ANCHORAGE TO DEVELOP A MINI
PULLOUT STRENGTH OF 18.6 KIPS. 11 INCHES EMBE
ASSUMED IN SIZING THE REINFORCEMENT. DRILLING
PREPARATION FOR ANCHORAGE OF REINFORCEMENT AND
CONCRETE REMOVAL ARE INCIDENTAL TO THE COST FO
BID ITEM "PREPARE BRIDGE FOR WIDENING".

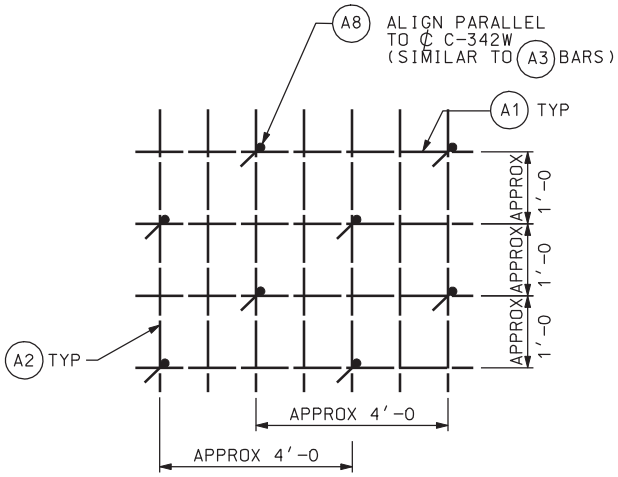


## TIE SPACING DETAIL

DGN File:IP_PWPcdnsl1717\4433_C-342-07_ABUTDT01.dgn
02-MAY-2005

ISTING CONCRETE
RAPET AND PORTION
WINGWALL TO BE
MOVED

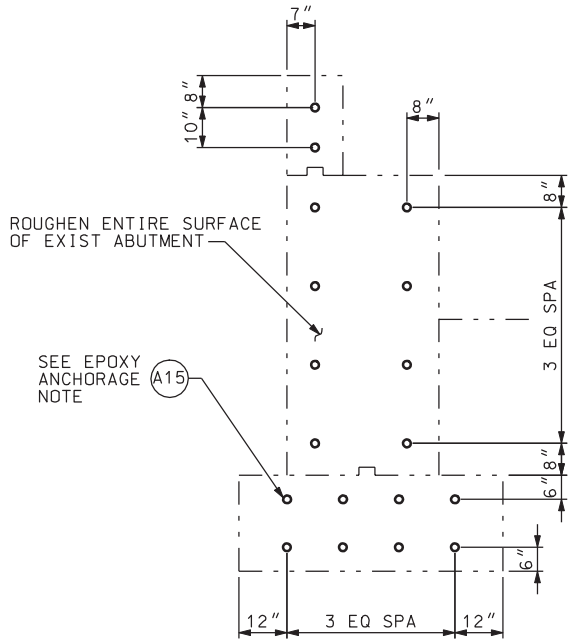


NOTE:
REMOVE UNSOUND AND
SPALLED CONCRETE TO
DEPTH APPROVED BY
THE ENGINEER.

## EXISTING ABUTMENT DOWEL DETAIL

MUM
DMENT IS
AND

R THE

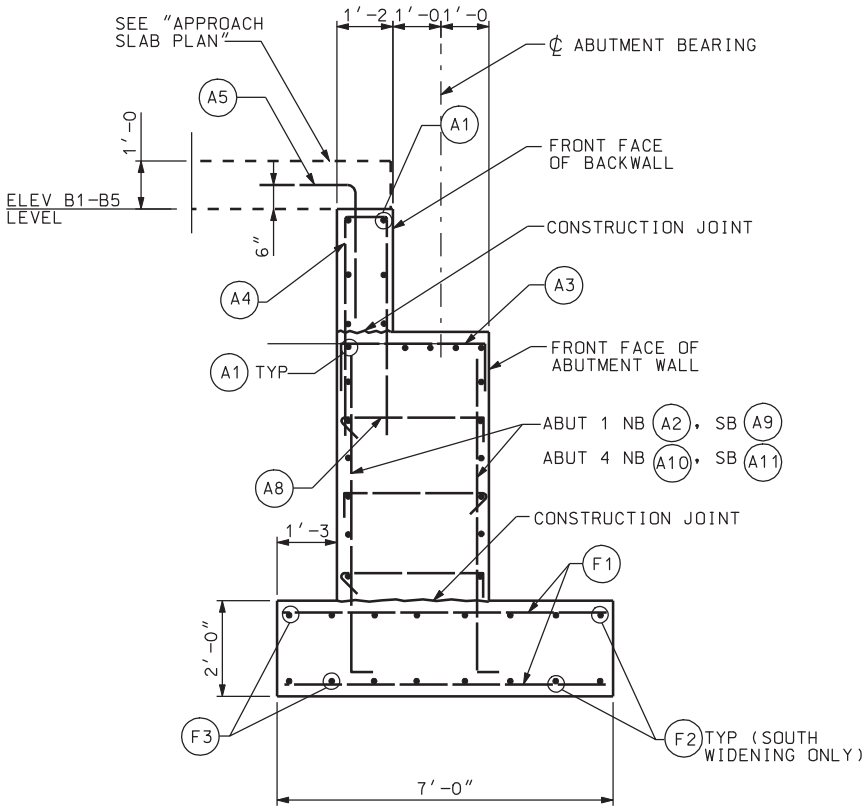


## SECTION A-A

| NO. | DATE | BY | REMARKS |
|---|---|---|---|
| | | | |

REVISIONS

UTAH DEPARTMENT OF TRANSPORTATION
SALT LAKE CITY, UTAH
STRUCTURES DIVISION

DESIGN KTF 10/04 CHECK JAR 12/04
DRAWN BLP 10/04 CHECK KAR 12/04
QUANT. KTF 10/04 CHECK JAR 12/04

APPROVAL RECOMM. DATE SENIOR DESIGN ENGR.
APPROVED FOR USE BY UDOT DATE UDOT BRIDGE ENGR.

I-15; CORRIDOR IN UTAH COUNTY
LEHI 300 WEST OVERPASS
ABUTMENT DETAILS

PROJECT NUMBER SP-15-6(52)241

UTAH
COUNTY

C-342W
DRG. NO.

SHT. 7 OF 26

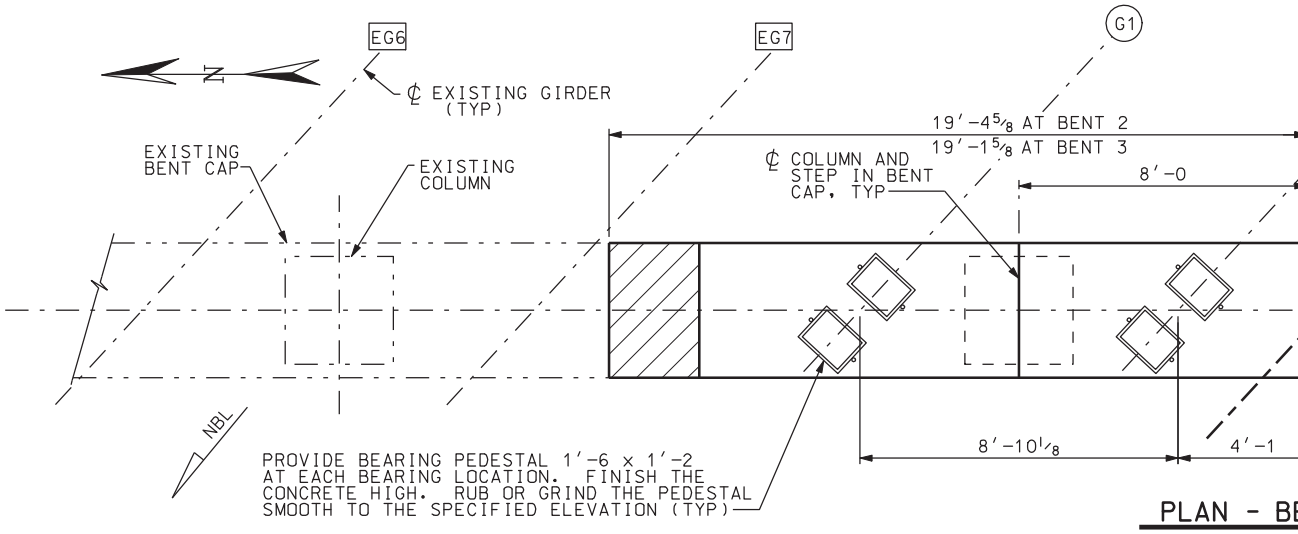


PLAN - BE

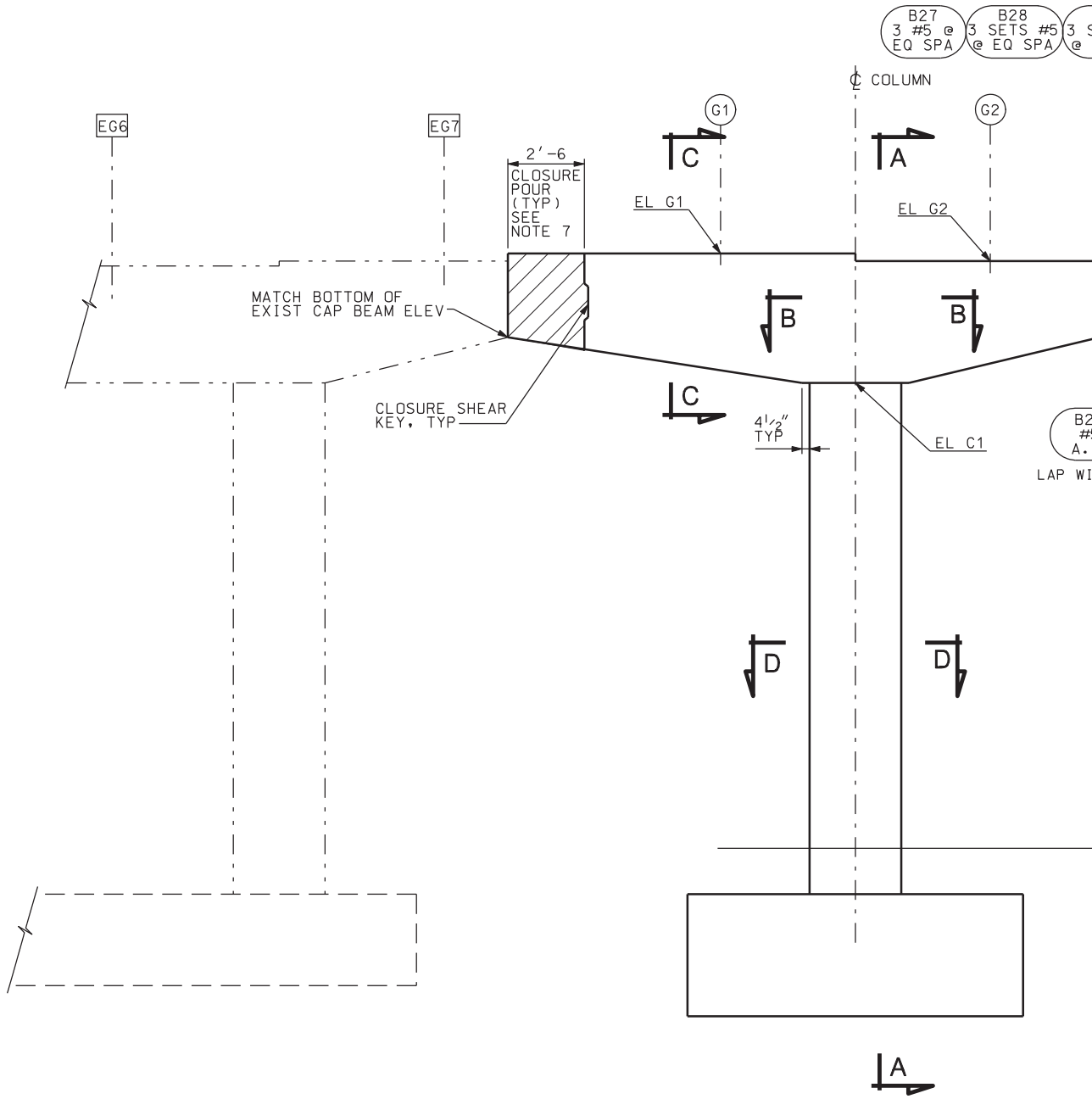


ELEVATION

CAP REINFORCING STE
NORTH BEN

DGN File:IP_PWPcdms1717\4433_C-342-08_BENT01.dgn

02-MAY-2005

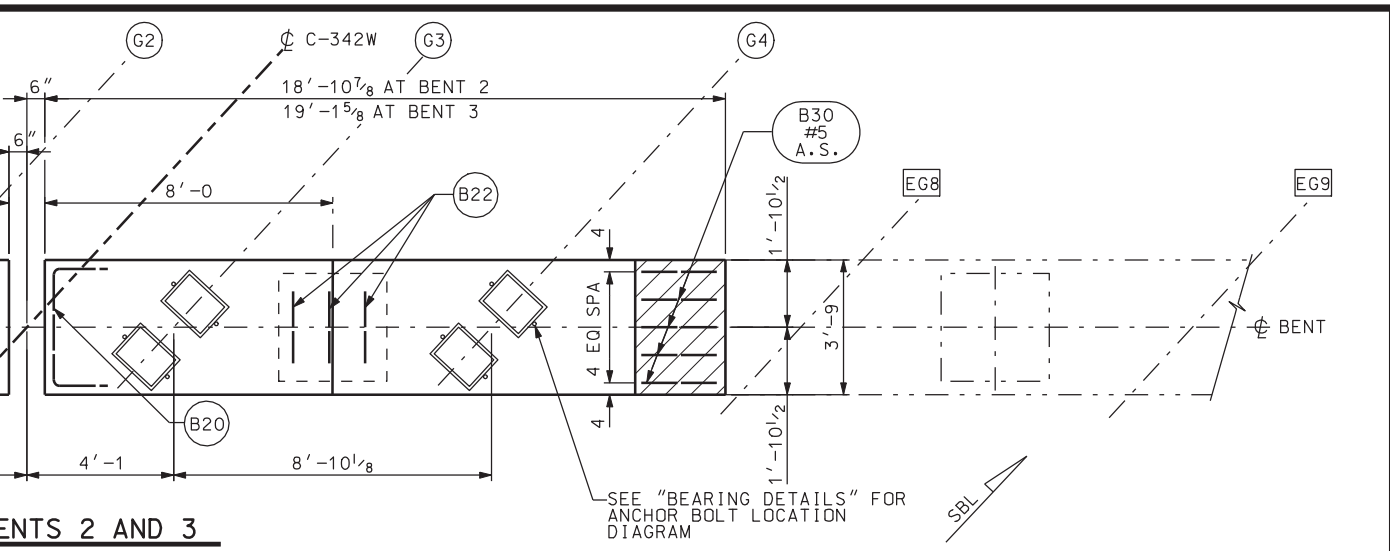


## ENTS 2 AND 3

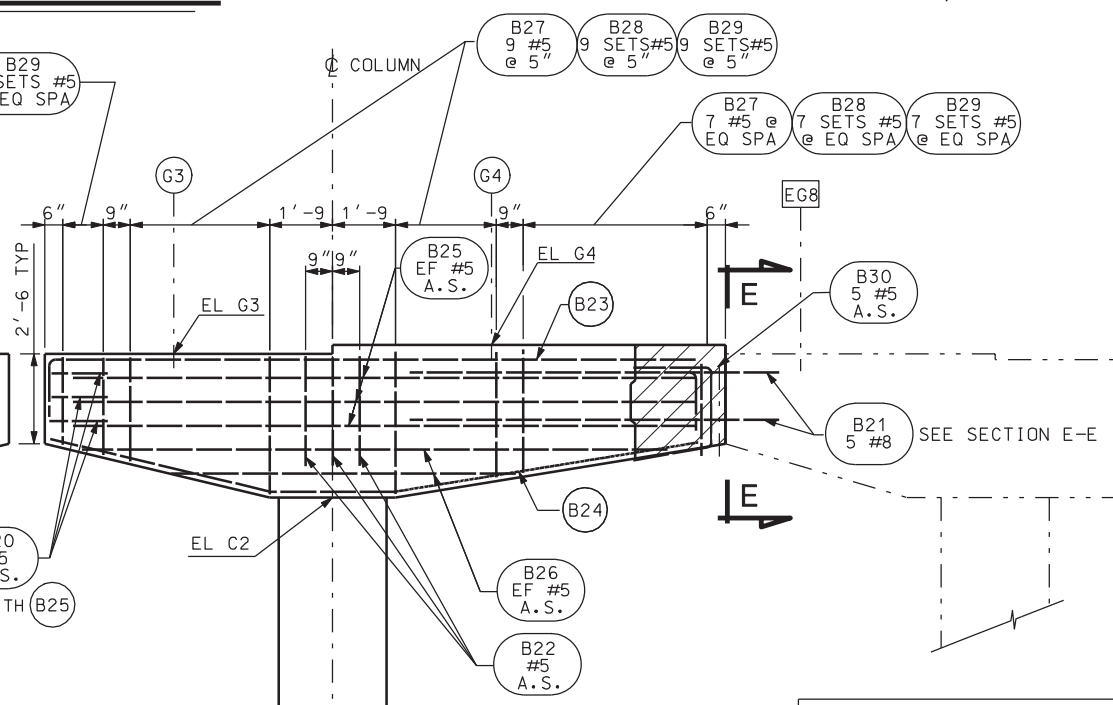


| ELEVATION SCHEDULE | | |
|---|---|---|
| LOCATION | BENT 2 | BENT 3 |
| G1 | 4576.67 | 4575.93 |
| G2 | 4576.52 | 4575.77 |
| G3 | 4576.45 | 4575.69 |
| G4 | 4576.43 | 4575.66 |
| C1 | 4572.52 | 4571.77 |
| C2 | 4572.45 | 4571.69 |

FINISH GRADE

## NOTES

1. PLACE STIRRUPS NORMAL TO ℄ BENT.
2. FOR SECTIONS AND COLUMN REINFORCING, SEE "BENT DETAILS".
3. FOR BOTTOM OF FOOTING ELEVATIONS, SEE "FOUNDATION PLAN".
4. FOR FOOTING REINFORCING, SEE "BENT FOOTING DETAILS".
5. SEE "BEARING DETAILS" FOR BEARING AND ANCHOR BOLT DETAIL. ADJUST SPACING OF BENT CAP REINFORCING UP TO 4" TO ACCOMMODATE ANCHOR BOLTS. MAINTAIN AT LEAST TWO BAR DIAMETERS CLEAR SPACING BETWEEN BARS.
6. EF = EACH FACE
   A.S. = AS SHOWN
7. PLACE BENT CAP CLOSURE AFTER DECK SLAB POUR SEQUENCE ② AND PRIOR TO ③, SEE "DECK SLAB PLAN".

## - BENTS 2 AND 3

EL SHOWN FOR SOUTH BENT CAP,
NT CAP SIMILAR.

| QUANTITIES<br>STRUCTURAL CONCRETE | | |
|---|---|---|
| LOCATION | BENT 2 | BENT 3 |
| BENT CAP | 18.1 CY | 18.1 CY |
| COLUMN | 10.3 CY | 12.5 CY |
| TOTAL | 28.4 CY | 30.6 CY |

| NO. | DATE | BY | REMARKS |
|---|---|---|---|
| | | | |

REVISIONS

UTAH DEPARTMENT OF TRANSPORTATION
SALT LAKE CITY, UTAH
STRUCTURES DIVISION

DESIGN KTF 10/04 CHECK KMR 12/04
DRAWN BLP 10/04 CHECK KMR 12/04
QUANT. KTF 10/04 CHECK KMR 12/04

APPROVAL RECOMM. DATE SENIOR DESIGN ENGR.
APPROVED FOR USE BY UDOT DATE UDOT BRIDGE ENGR.

I-15; CORRIDOR IN UTAH COUNTY
LEHI 300 WEST OVERPASS
BENT PLAN AND ELEVATION
PROJECT NUMBER SP-15-6(52)241

UTAH
COUNTY
C-342W
DRG. NO.
SHT. 8 OF 26

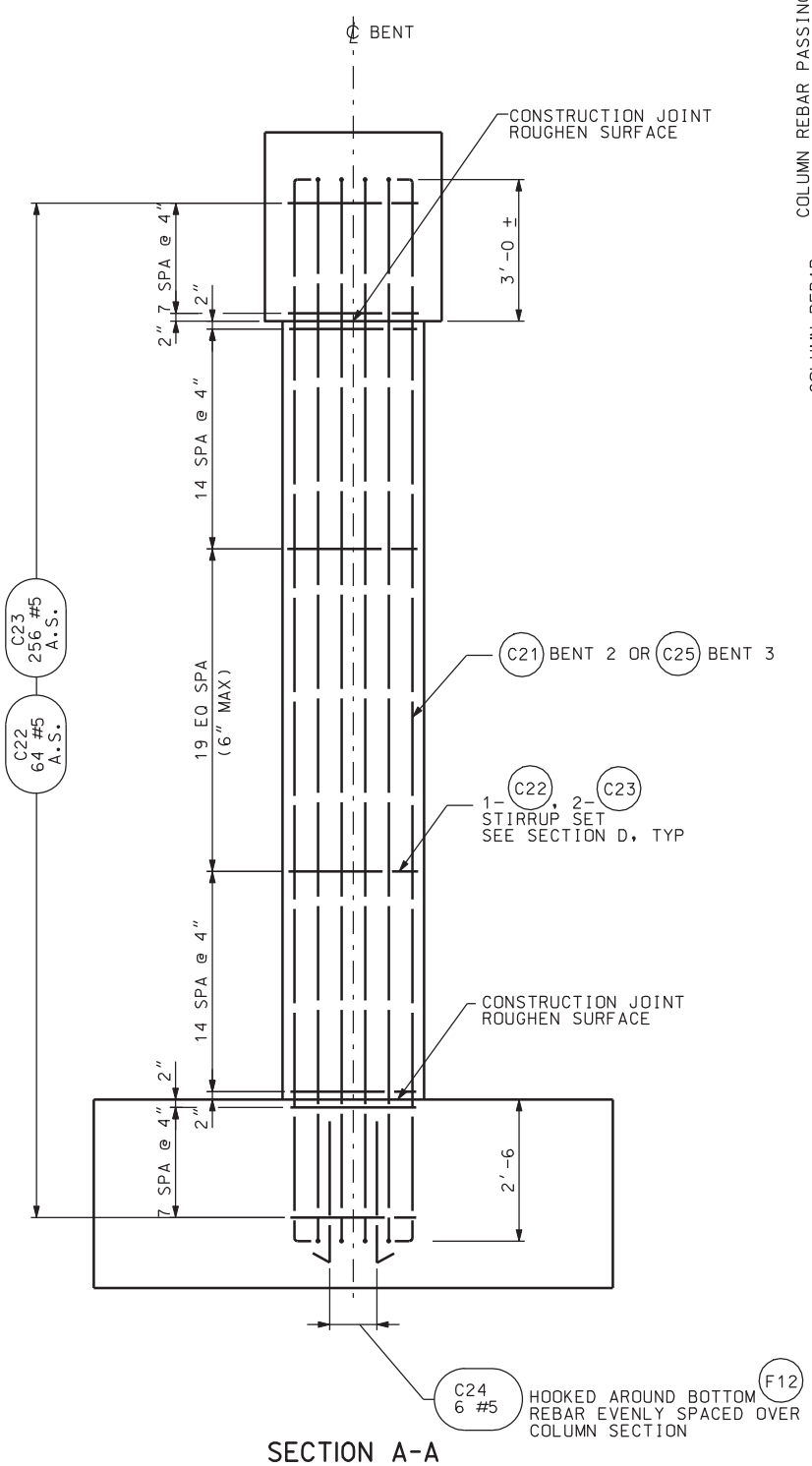


## SECTION A-A

SEE "BENT FOOTING DETAILS"
FOR FOOTING REINFORCEMENT.

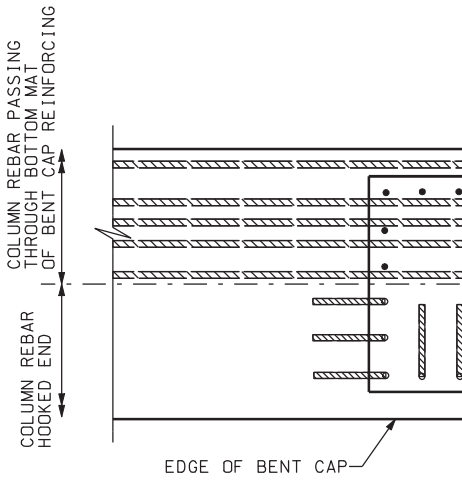


## SECTI

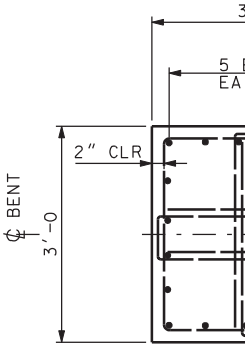


## SECTI

## EPOXY ANC

USE APPROVED EPOXY ANCH
PULLOUT STRENGTH OF 47.
ASSUMED IN SIZING THE R
PREPARATION FOR ANCHORA
CONCRETE REMOVAL ARE IN
BID ITEM "PREPARE BRIDG

DGN File:IP_PWPcdms1717\4433_C-342-09_BENTDT01.dgn
02-MAY-2005

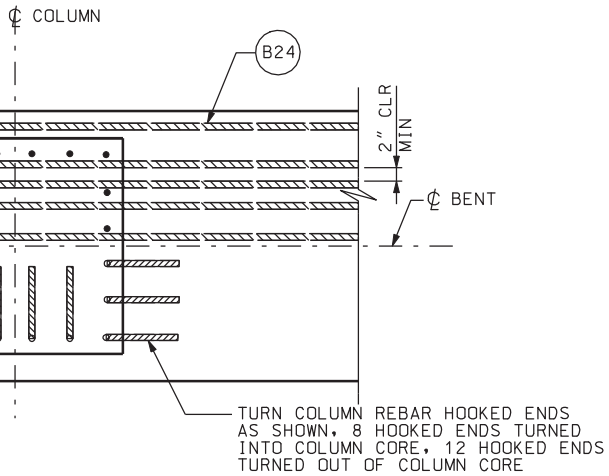


ON B-B

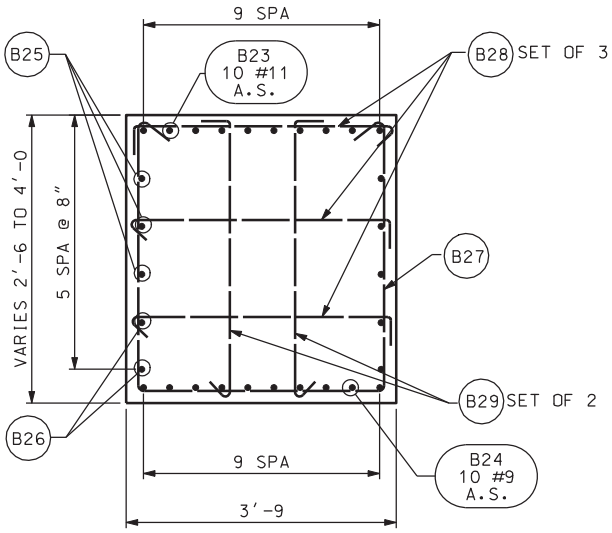


SECTION C-C

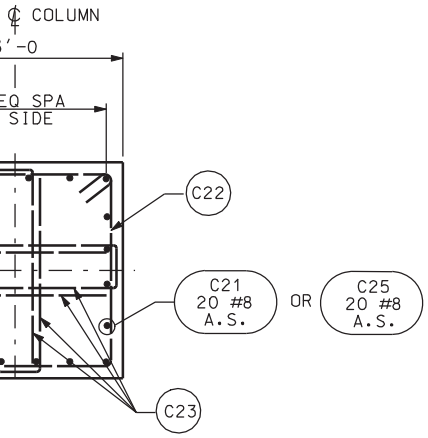


ION D-D

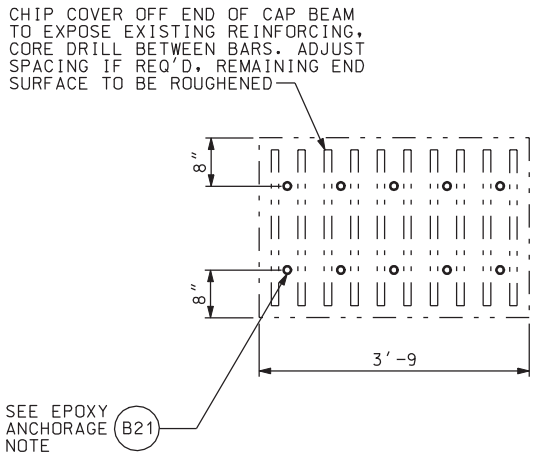


SECTION E-E

## HORAGE NOTE

ORAGE TO DEVELOP A MINIMUM
4 KIPS. 18 INCHES EMBEDMENT IS
EINFORCEMENT. DRILLING AND
GE OF REINFORCEMENT AND
CIDENTAL TO THE COST FOR THE
E FOR WIDENING".

## NOTES

1. ADJUST SPACING OF FOOTING AND BENT CAP REINFORCING UP TO 4" TO ACCOMMODATE COLUMN REINFORCING. MAINTAIN AT LEAST THREE BAR DIAMETER SPACING.
2. ADJUST HOOP AND TIE REINFORCING TO AVOID CONFLICT WITH BENT CAP REINFORCING.

| NO. | DATE | BY | REMARKS |
|---|---|---|---|

REVISIONS

UTAH DEPARTMENT OF TRANSPORTATION
SALT LAKE CITY, UTAH
STRUCTURES DIVISION

DESIGN KTF 10/04 CHECK KMR 12/04
DRAWN BLP 10/04 CHECK KMR 12/04
QUANT. KTF 10/04 CHECK KMR 12/04

APPROVAL RECOMM. DATE SENIOR DESIGN ENGR.
APPROVED FOR USE BY UDOT DATE UDOT BRIDGE ENGR.

I-15; CORRIDOR IN UTAH COUNTY
LEHI 300 WEST OVERPASS
BENT DETAILS
PROJECT NUMBER SP-15-6(52)241

UTAH
COUNTY

C-342W
DRG. NO.

SHT. 9 OF 26

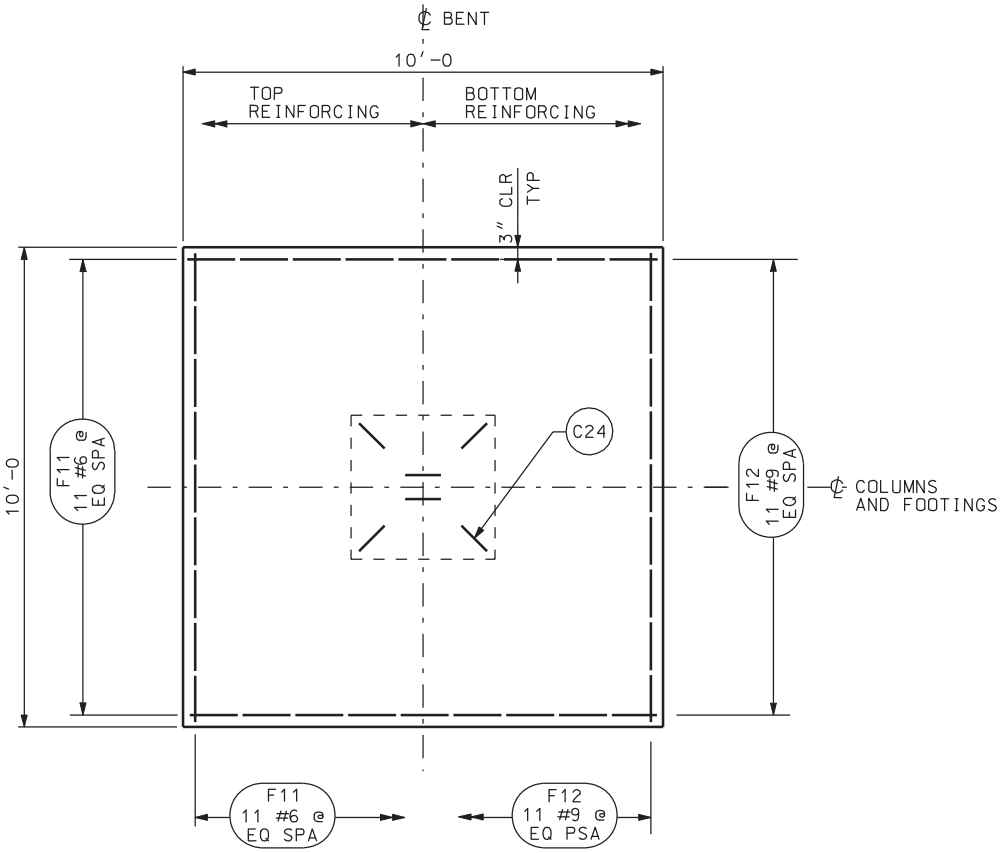


## FOOTING PLAN - BENTS 2 AND 3

ADJUST SPACING OF FOOTING REINFORCEMENT UP TO 4″ TO ACCOMMODATE COLUMN REINFORCEMENT.

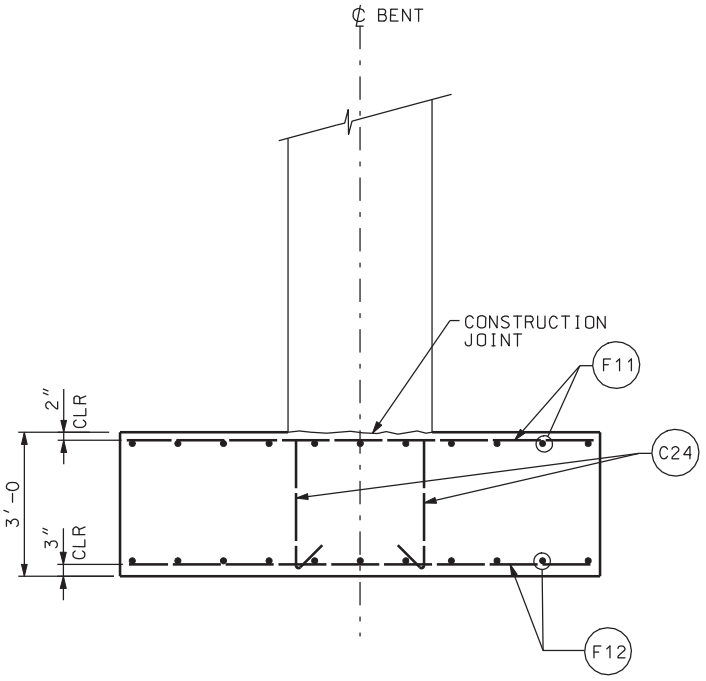


## ELEVATION - BENTS 2 AND 3

COLUMN REINFORCEMENT NOT SHOWN FOR CLARITY.

# QUANTITIES

STRUCTURAL CONCRETE

BENTS 2 & 3
(4 LOCATIONS)

44.4 CY

UTAH
COUNTY

C-342W
DRG. NO.

SHT. 10 OF 26

I-15; CORRIDOR IN UTAH COUNTY

LEHI 300 WEST OVERPASS

BENT FOOTING DETAILS

PROJECT NUMBER SP-15-6(52)241

UTAH DEPARTMENT OF TRANSPORTATION
SALT LAKE CITY, UTAH
STRUCTURES DIVISION

APPROVAL RECOMM. DATE SENIOR DESIGN ENGR.

APPROVED FOR USE BY UDOT DATE UDOT BRIDGE ENGR.

| | | | |
|---|---|---|---|
| DESIGN | KTF | 10/04 | CHECK KMR 12/04 |
| DRAWN | BLP | 10/04 | CHECK KMR 12/04 |
| QUANT. | KTF | 11/04 | CHECK KMR 12/04 |

| NO. | DATE | BY | REMARKS |
|---|---|---|---|

REVISIONS

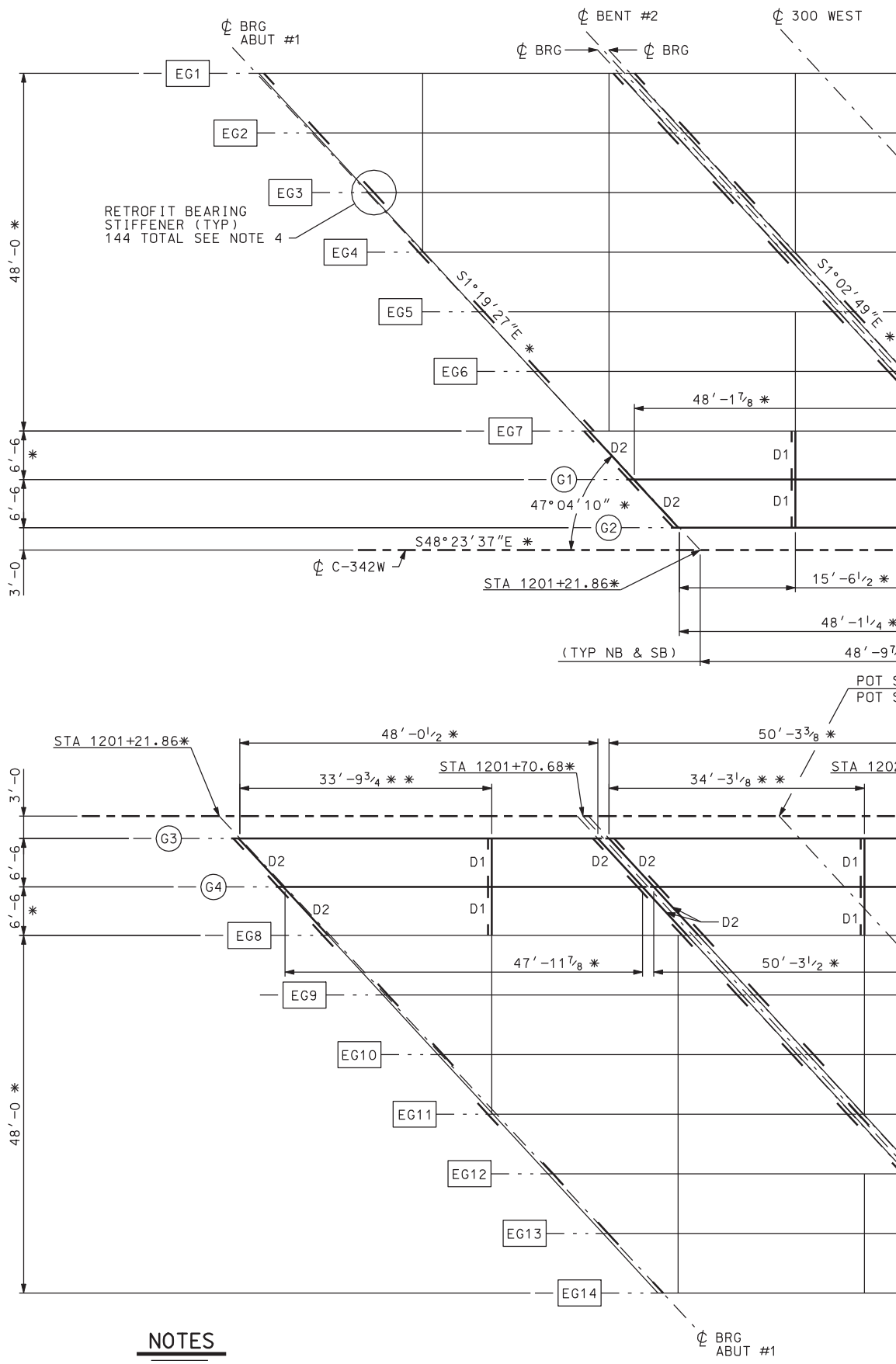


## NOTES

1. (G1) (G2) (G3) (G4) ARE PARALLEL TO BEARING S48°23'37"E.
2. SEE "GIRDER DETAILS" SHEET FOR GIRDER ELEVATIONS AND GENERAL NOTES.
3. SEE "DIAPHRAGM DETAILS 1" SHEET FOR DIAPHRAGM LAYOUT.
4. SEE "DIAPHRAGM DETAILS 2" FOR RETROFIT BEARING STIFFENER DETAIL AT EACH EXISTING BEARING.

## FRAMING

DGN File: IP_PWPcdms1717\4433_C-342-11_FR&M01.dgn

02-MAY-2005

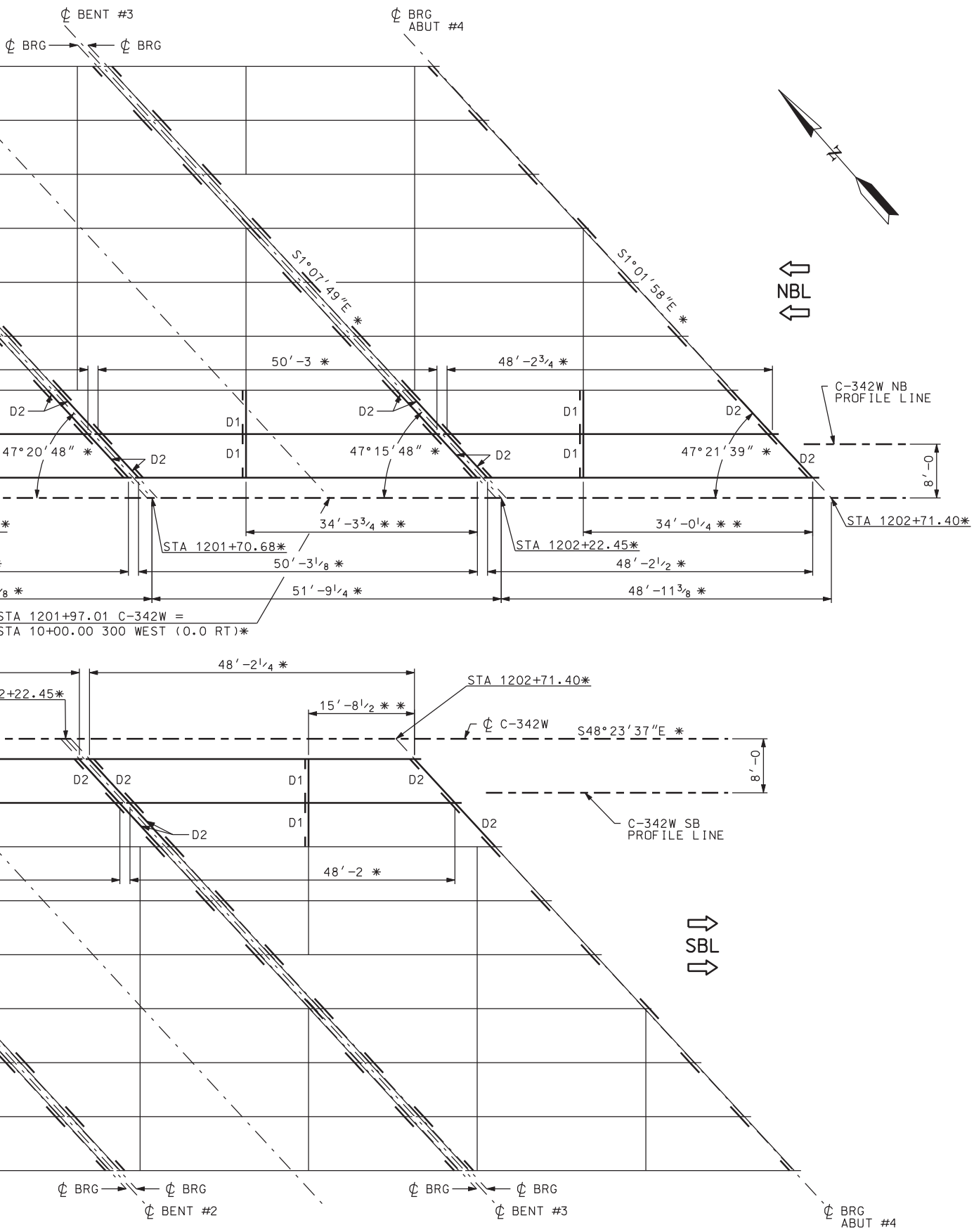


PLAN

* SEE "SITUATION & LAYOUT 1" SHEET GENERAL NOTE 6.

** FIELD VERIFY EXISTING DIAPHRAGM LOCATION. LINE UP NEW DIAPHRAGM WITH EXISTING DIAPHRAGMS.

EG1 — - — - · EXISTING GIRDER MARK NUMBER

(G1) — - — - — NEW GIRDER MARK NUMBER

| NO. | DATE | BY | REMARKS |
|---|---|---|---|

REVISIONS

UTAH DEPARTMENT OF TRANSPORTATION
SALT LAKE CITY, UTAH
STRUCTURES DIVISION

DESIGN JW 08/04 CHECK JY 08/04
DRAWN JW 09/04 CHECK PBB 10/04
QUANT. CHECK

APPROVAL RECOMM. DATE SENIOR DESIGN ENGR.
APPROVED FOR USE BY UDOT DATE UDOT BRIDGE ENGR.

I-15; CORRIDOR IN UTAH COUNTY
LEHI 300 WEST OVERPASS
FRAMING PLAN
PROJECT NUMBER SP-15-6(52)241

UTAH
COUNTY

C-342W
DRG. NO.

SHT. 11 OF 26

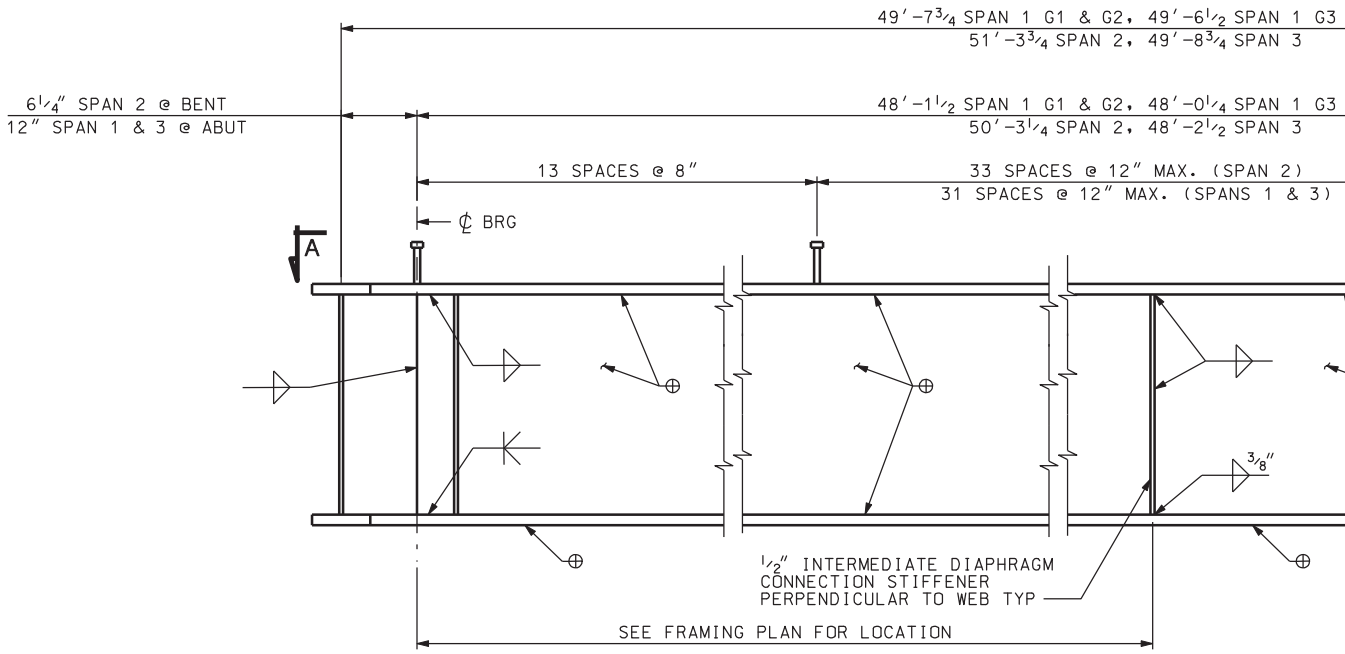


## GIRDER ELEVATION

W30x124 GIRDER

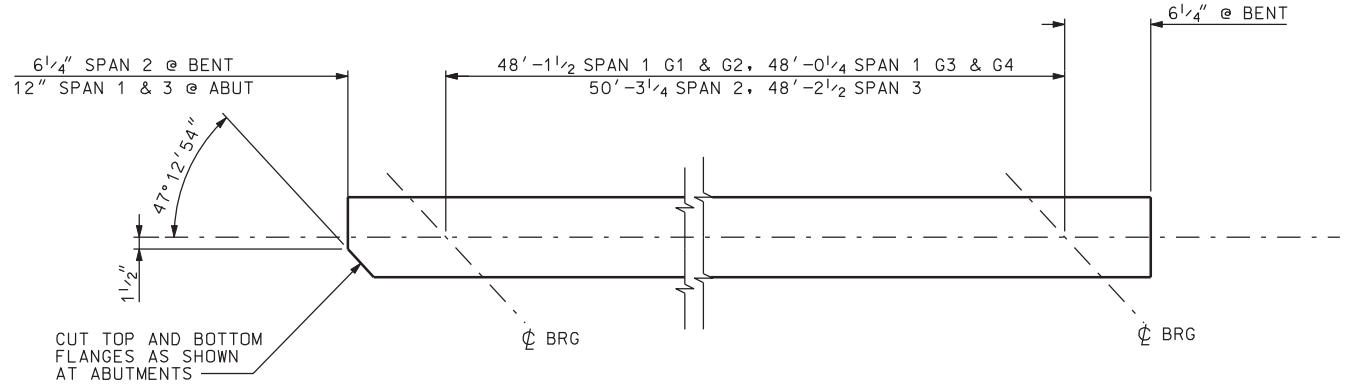


## SECTION A-A

DGN File:IP_PWPcdnsl717\4433_C-342-12_STEEL01.dgn

02-MAY-2005

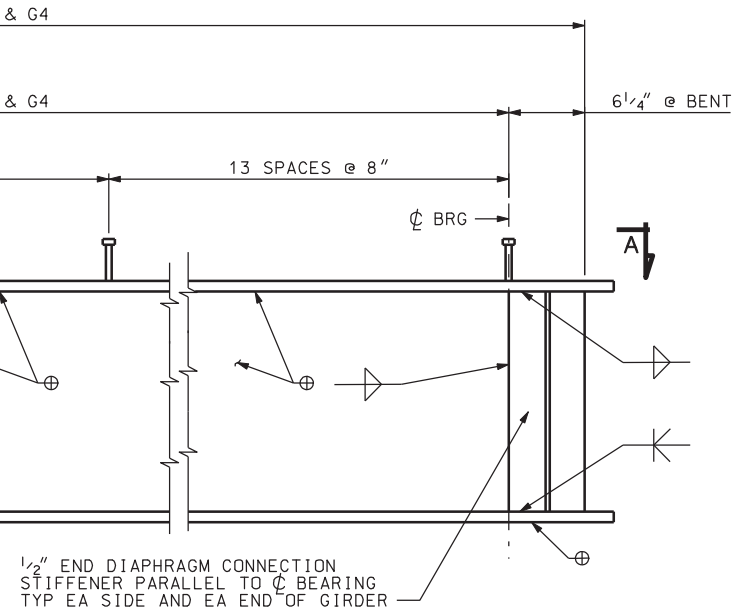


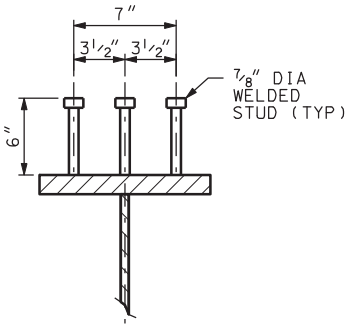


SHEAR STUD DETAIL

## NOTES

1. ERECT THE GIRDERS WITH THE NATURAL CAMBER UP.
2. PERFORM CHARPY V-NOTCH TOUGHNESS TEST ON ALL MAIN LOAD CARRYING MEMBERS, INDICATED BY ⊕, TO MEET REQUIREMENTS FOR ZONE 2.
3. ALL DIMENSIONS SHOWN ARE HORIZONTAL. ADJUST LENGTHS AS NECESSARY IN FABRICATION TO TAKE VERTICAL GRADE INTO ACCOUNT.
4. ALL INTERMEDIATE DIAPHRAGMS ARE NORMAL TO THE WEB. BEARING STIFFENERS ARE PARALLEL TO THE CENTERLINE OF BEARINGS.
5. CENTERLINES OF GIRDERS ARE PARALLEL TO CENTERLINE C-342W.
6. INCLUDE THE PRICE FOR SHEAR STUDS, BOLTS AND STIFFENERS IN THE CONTRACT PRICE FOR STRUCTURAL STEEL.
7. SEE "BEARING DETAILS" SHEET FOR SOLE PLATE AND BEARING DETAILS.
8. USE STRUCTURAL STEEL CONFORMING TO AASHTO M270 GRADE 36 MINIMUM FOR ALL STRUCTURAL STEEL.
9. CONFORM WELDING, WELDER QUALIFICATIONS, PREQUALIFICATION OF WELD DETAILS AND INSPECTION OF WELDS TO THE REQUIREMENTS OF THE ANSI/AASHTO/AWS BRIDGE WELDING CODE D1.5.
10. THE METHODS OF JOINT PREPARATION FOR WELDING SHOWN ON THE PLANS ARE BASED ON THE USE OF MANUAL SHIELDED METAL-ARC WELDING. THE USE OF THIS OR ANY OTHER WELDING PROCESS WILL BE SATISFACTORY ONLY AFTER THE WELDING PROCEDURE HAS BEEN SUBMITTED BY THE CONTRACTOR AND APPROVED BY THE ENGINEER.
11. USE THE MINIMUM SIZED STRENGTH FILLET WELDS REQUIRED BY ANSI/AASHTO/AWS BRIDGE WELDING CODE D1.5 FOR THE THICKNESS OF THE MATERIAL JOINED UNLESS OTHERWISE SPECIFIED. USE MINIMUM FILLET WELD SIZE OF 1/4", EXCEPT WHERE NOTED OTHERWISE.
12. DIMENSIONS SHOWN ON THE PLANS ASSUME THE AMBIENT TEMPERATURE OF THE GIRDER TO BE 70°F . CORRECT THE LENGTH USED IN FABRICATION AT THE RATE OF 1/16" PER EACH 100' OF LENGTH FOR EVERY 10°F DIFFERENCE IN TEMPERATURE TO ALLOW FOR EXPANSION AND CONTRACTION.
13. DO NOT FIELD WELD TO GIRDERS EXCEPT WHERE NOTED OTHERWISE.
14. ALL BOLTED CONNECTIONS SHALL BE MADE WITH 7/8" DIA. HIGH STRENGTH BOLTS CONFORMING TO ASTM A325, TYPE 1, UNLESS NOTED OTHERWISE.

℄ GIRDER

| NO. | DATE | BY | REMARKS |
|---|---|---|---|

REVISIONS

UTAH DEPARTMENT OF TRANSPORTATION
SALT LAKE CITY, UTAH
STRUCTURES DIVISION

DESIGN JW 08/04 CHECK JY 08/04
DRAWN JW 09/04 CHECK PBB 10/04
QUANT. CHECK

APPROVAL RECOMM. DATE SENIOR DESIGN ENGR.
APPROVED FOR USE BY UDOT DATE UDOT BRIDGE ENGR.

I-15; CORRIDOR IN UTAH COUNTY
LEHI 300 WEST OVERPASS
GIRDER DETAILS
PROJECT NUMBER SP-15-6(52)241

UTAH
COUNTY

C-342W
DRG. NO.

SHT. 12 OF 26

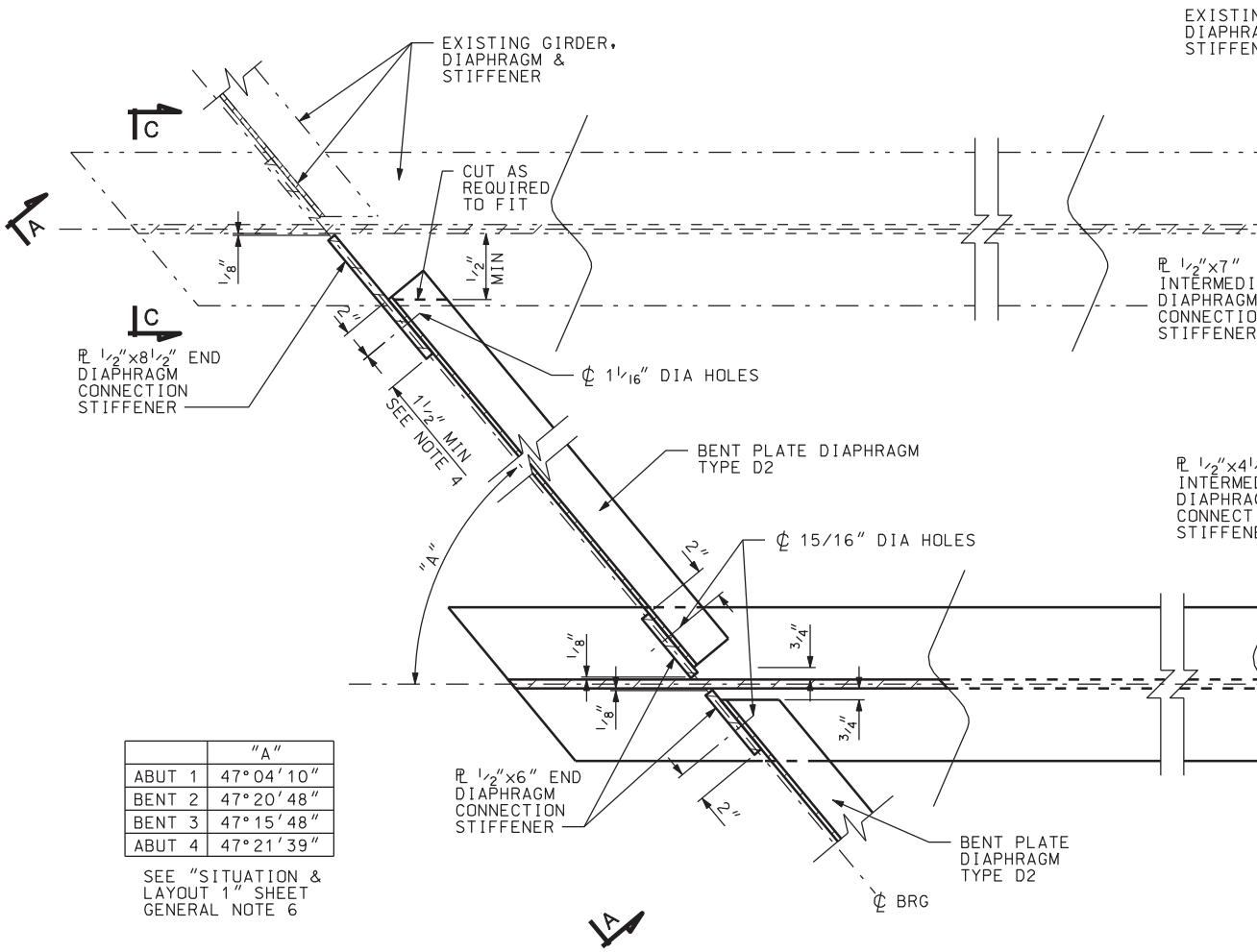


| | "A" |
|---|---|
| ABUT 1 | 47°04′10″ |
| BENT 2 | 47°20′48″ |
| BENT 3 | 47°15′48″ |
| ABUT 4 | 47°21′39″ |

SEE "SITUATION & LAYOUT 1" SHEET GENERAL NOTE 6

## DIAPHRAGM

NOTE: G1 IS SHOWN. G4 IS SIMILAR (OPP
ONE SIDE STIFFENER AND DIAPHRAGM
REQUIRED FOR G2 AND G3

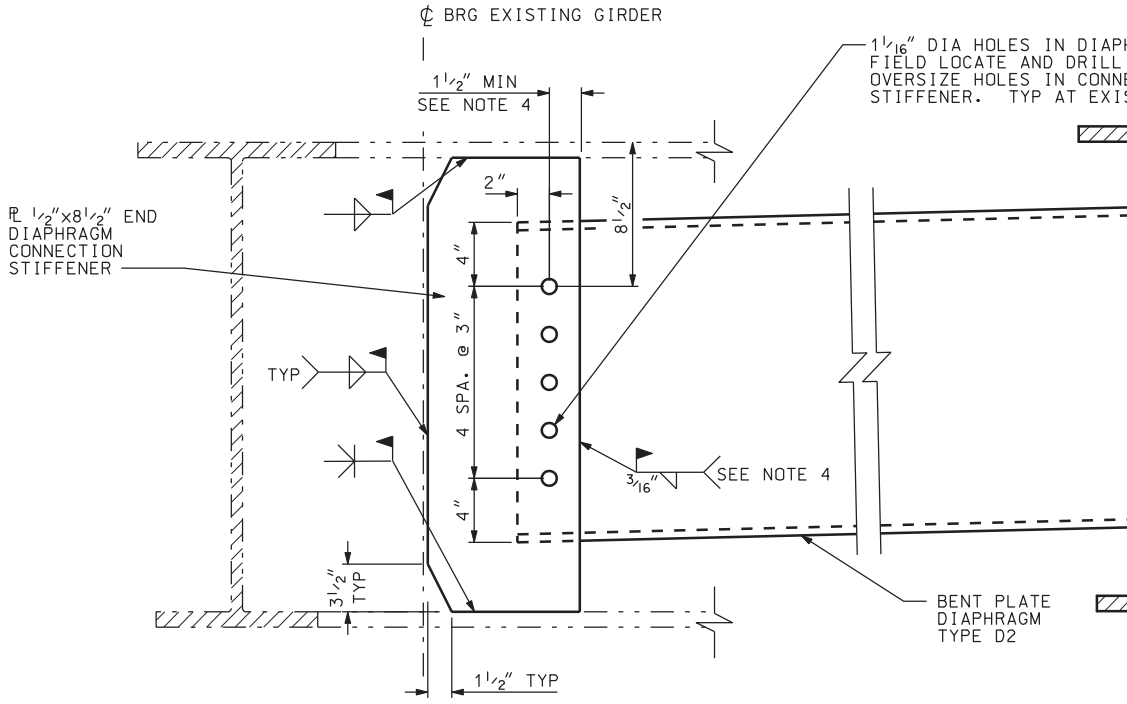


## SECTION A-A

DGN File:IP_PWPcdns1717\4433_C-342-13_STEEL02.dgn

02-MAY-2005

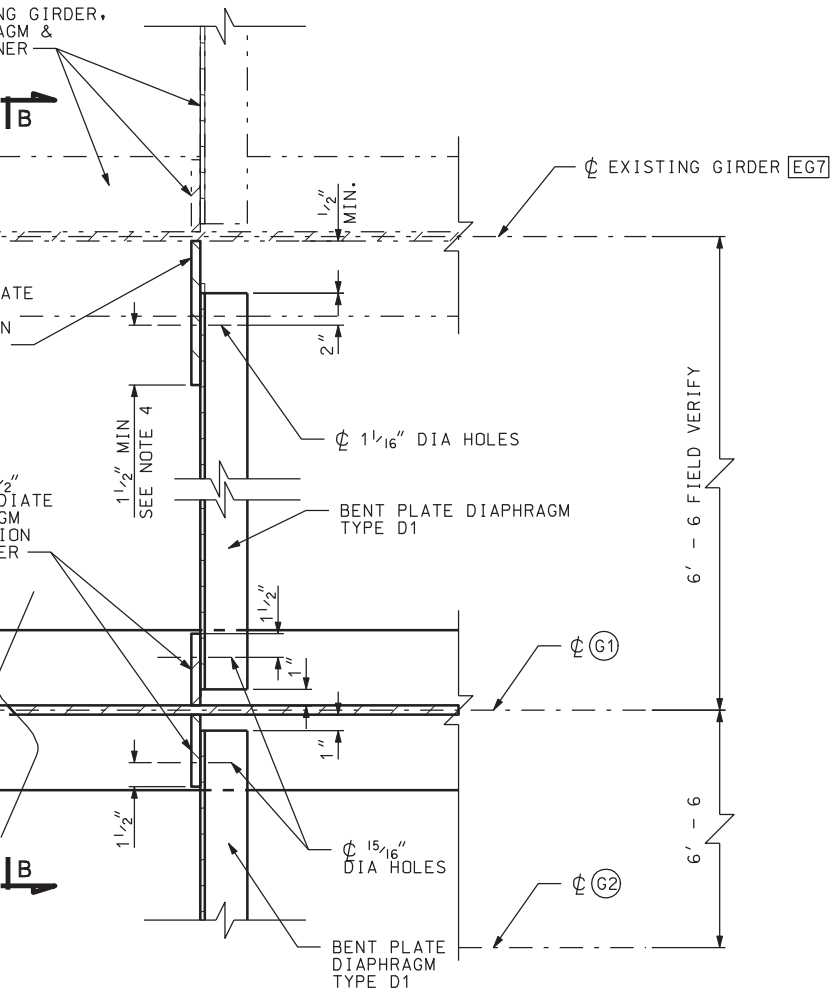


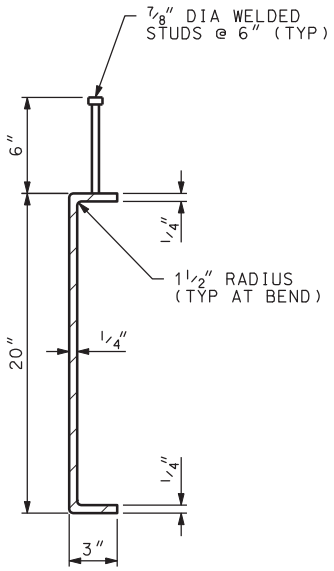


## BENT PLATE DIAPHRAGM DETAIL

NOTE: CONTRACTOR MAY SUBSTITUTE MC 18 x 42.7 FOR BENT PLATE SECTION AT NO ADDITIONAL COST TO THE DEPARTMENT

POSITE HAND)
M ARE

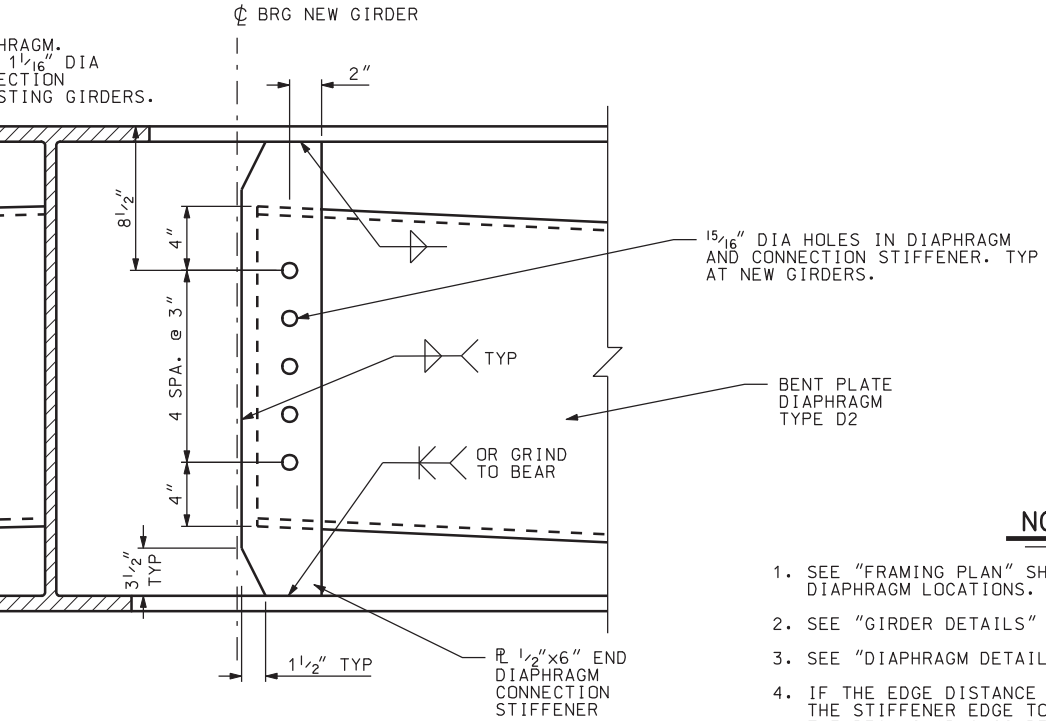


## NOTES

1. SEE "FRAMING PLAN" SHEET FOR INTERMEDIATE DIAPHRAGM LOCATIONS.
2. SEE "GIRDER DETAILS" SHEET FOR GENERAL NOTES.
3. SEE "DIAPHRAGM DETAILS 2" SHEET FOR SECTION B-B.
4. IF THE EDGE DISTANCE EXCEEDS 2", FIELD WELD THE STIFFENER EDGE TO THE DIAPHRAGM AFTER THE DECK SLAB CLOSURE POUR IS IN PLACE.

| NO. | DATE | BY | REMARKS |
|---|---|---|---|
| | | | |

REVISIONS

UTAH DEPARTMENT OF TRANSPORTATION
SALT LAKE CITY, UTAH
STRUCTURES DIVISION

DESIGN JW 08/04 CHECK JY 08/04
DRAWN JW 09/04 CHECK PBB 10/04
QUANT. CHECK

APPROVAL RECOMM. DATE SENIOR DESIGN ENGR.
APPROVED FOR USE BY UDOT DATE UDOT BRIDGE ENGR.

I-15; CORRIDOR IN UTAH COUNTY
LEHI 300 WEST OVERPASS
DIAPHRAGM DETAILS 1
PROJECT NUMBER SP-15-6(52)241

UTAH
COUNTY

C-342W
DRG. NO.

SHT. 13 OF 26

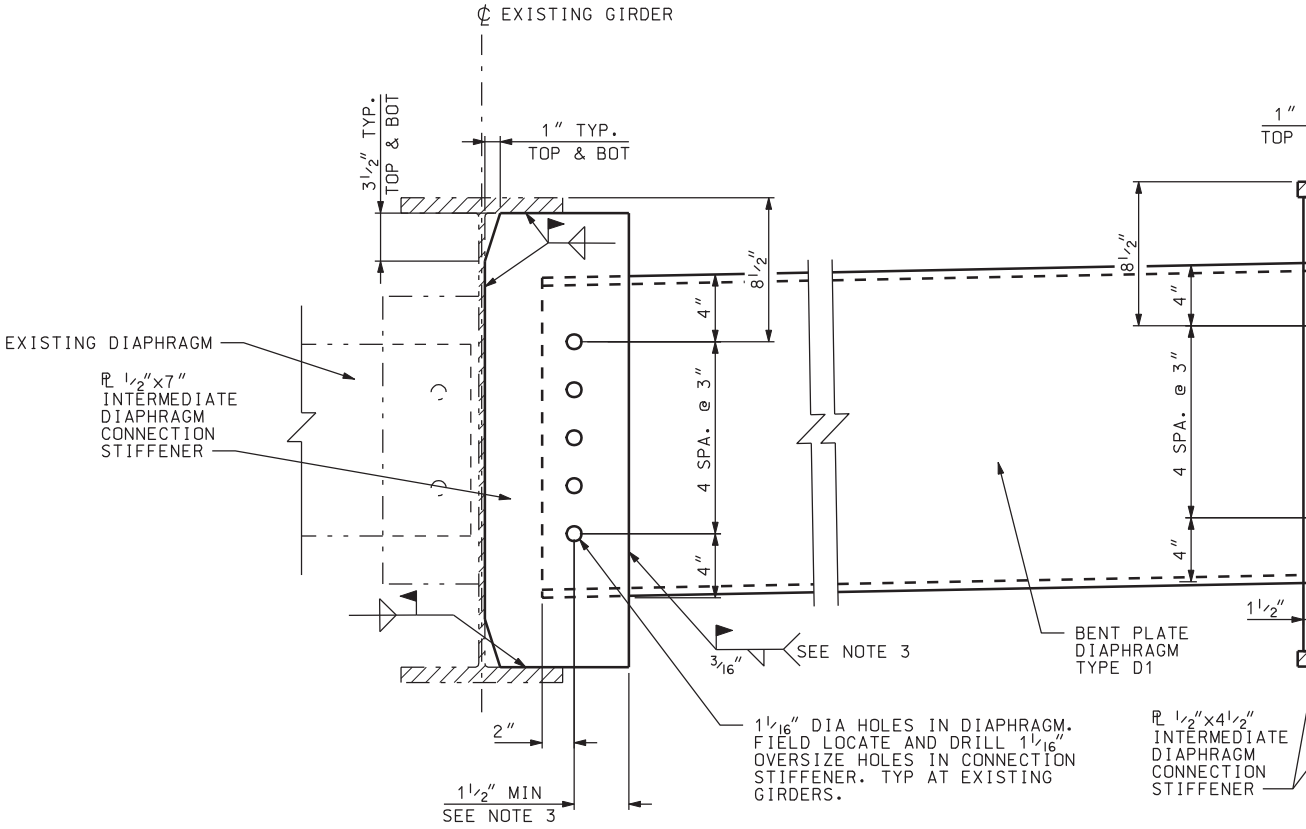


SECTION B-B

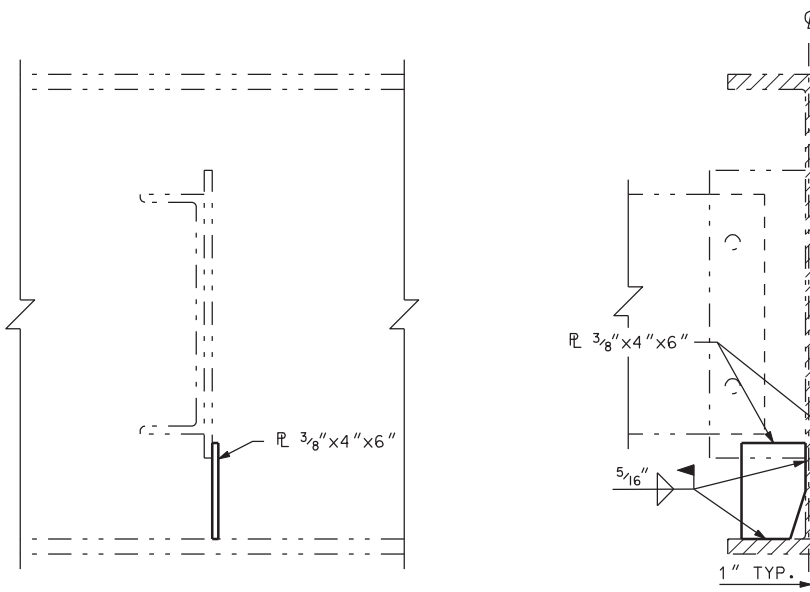


SECTION THRU CHANNEL

SECTIO

RETROFIT BEARING STIFFENER DETAIL

DGN File:IP_PWPcdnsl717\4433_C-342-14_STEEL03.dgn
02-MAY-2005

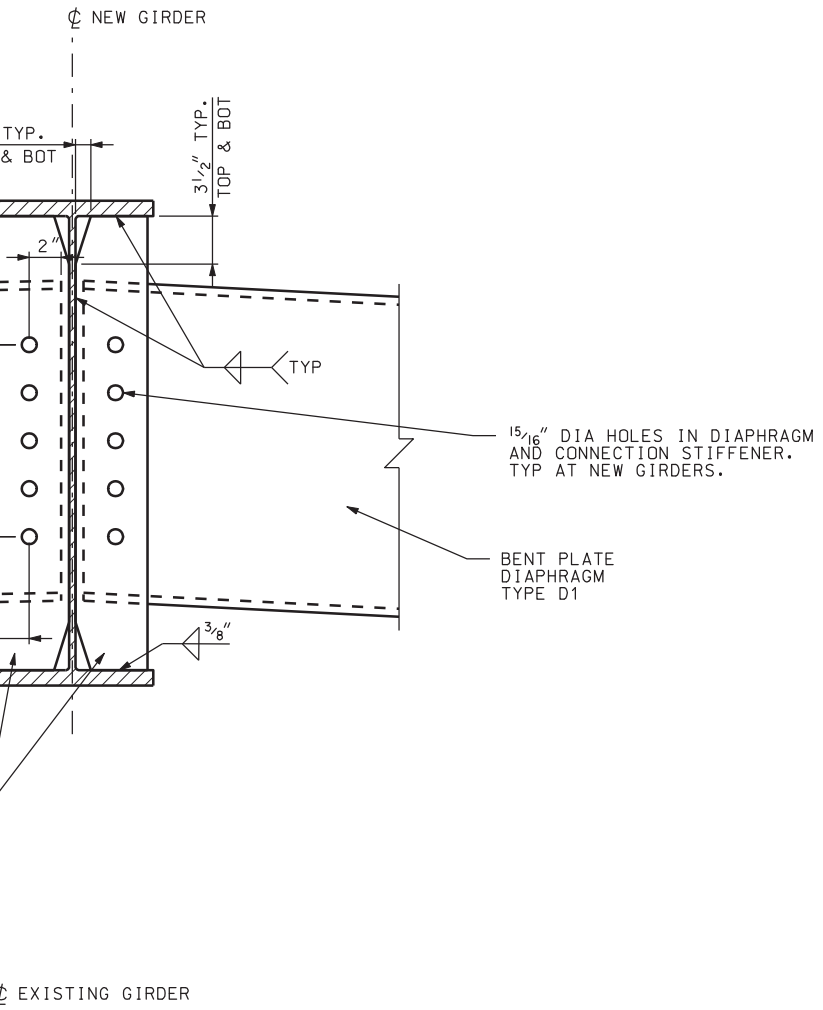


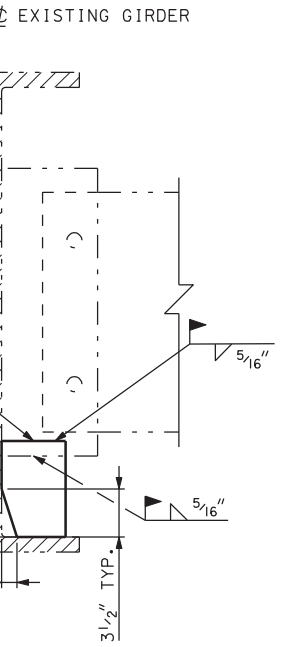


N C-C

## NOTES

1. SEE "FRAMING PLAN" SHEET FOR INTERMEDIATE DIAPHRAGM LOCATIONS.
2. SEE "GIRDER DETAILS" SHEET FOR GENERAL NOTES.
3. IF THE EDGE DISTANCE EXCEEDS 2", FIELD WELD THE STIFFENER EDGE TO DIAPHRAGM AFTER THE DECK SLAB CLOSURE POUR IS IN PLACE.

| NO. | DATE | BY | REMARKS |
|---|---|---|---|

REVISIONS

UTAH DEPARTMENT OF TRANSPORTATION
SALT LAKE CITY, UTAH
STRUCTURES DIVISION

DESIGN JW 08/04 CHECK JY 08/04
DRAWN JW 09/04 CHECK PBB 10/04
QUANT. CHECK

APPROVAL RECOMM. DATE SENIOR DESIGN ENGR.
APPROVED FOR USE BY UDOT DATE UDOT BRIDGE ENGR.

I-15; CORRIDOR IN UTAH COUNTY
LEHI 300 WEST OVERPASS
DIAPHRAGM DETAILS 2
PROJECT NUMBER SP-15-6(52)241

UTAH
COUNTY

C-342W
DRG. NO.

SHT. 14 OF 26

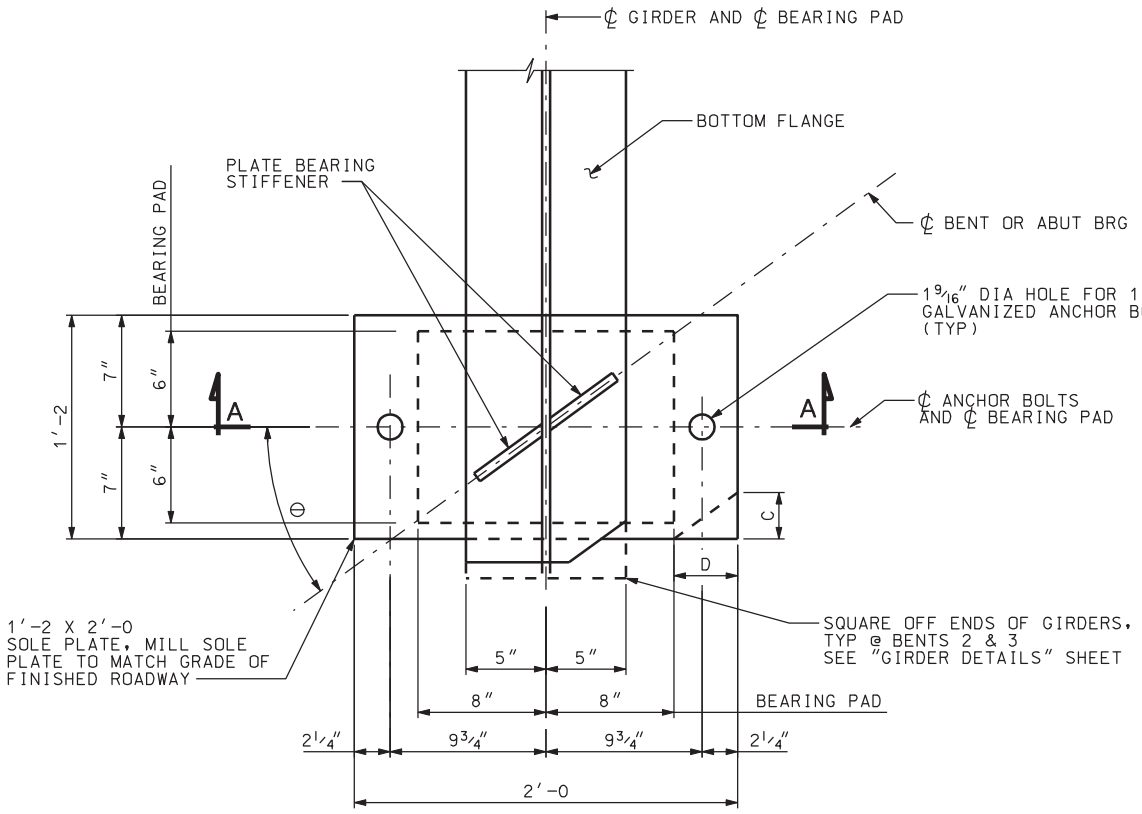


## PLAN

| BEARING DE | | |
|---|---|---|
| | Θ | NO. |
| ABUT 1 | 47°04′10″ | |
| BENT 2 | 47°20′48″ | |
| BENT 3 | 47°15′48″ | |
| ABUT 4 | 47°21′39″ | |

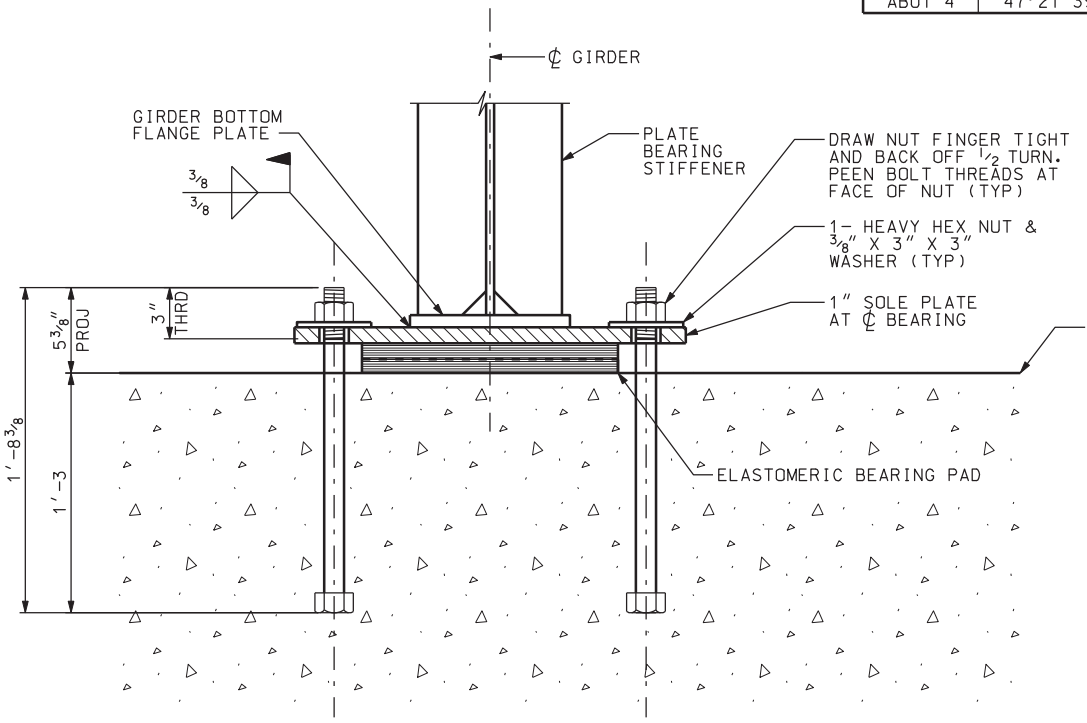


## SECTION A-A

DGN File:IP_PWPcdns1717\4433_C-342-15_BRNG01.dgn

02-MAY-2005

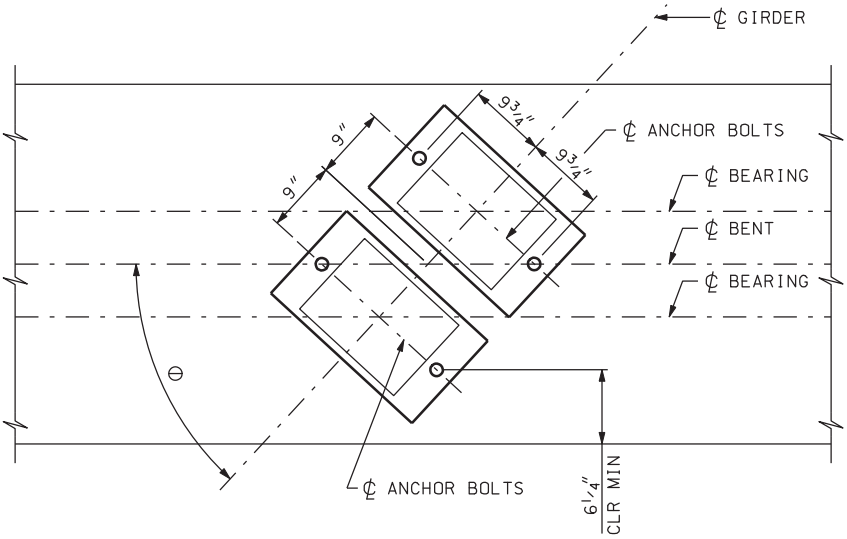


## ANCHOR BOLT LOCATION DIAGRAM (BENT)

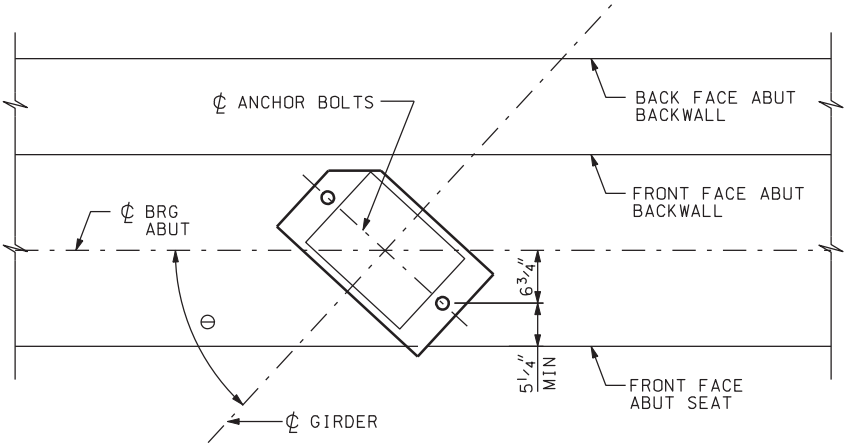


## ANCHOR BOLT LOCATION DIAGRAM (ABUTMENT)

TAILS

| BRG | C | D |
|---|---|---|
| 4 | 4 1/2" | 4 7/8" |
| 8 | N/A | N/A |
| 8 | N/A | N/A |
| 4 | 4 1/2" | 4 7/8" |

BEARING SEAT

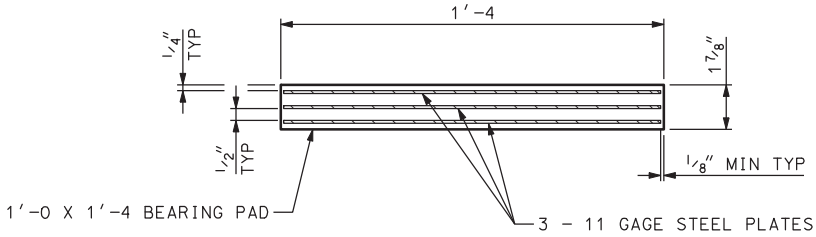


## BEARING PAD DETAIL

## NOTES

1. PAYMENT FOR ANCHOR BOLT AND BEARING ASSEMBLIES IS INCLUDED IN THE CONTRACT PRICE FOR STRUCTURAL STEEL.
2. ELASTOMER FOR BEARING PADS HARDNESS 50.
3. USE ASTM F-1554 GRADE 36 ANCHOR BOLTS.
4. GALVANIZE NUTS, WASHERS, AND ANCHOR BOLTS IN ACCORDANCE WITH AASHTO M232 (ASTM A153). ALL GALVANIZED STEEL THREADS ARE TO BE FREE FROM DEFECTS ALLOWING NUTS TO BE FREE RUNNING BY HAND FOR THE ENTIRE LENGTH OF THREADS.
5. FILL ANCHOR BOLT SOLE PLATE HOLES WITH SILICONE JOINT SEALER.
6. SOLE PLATES SHALL BE BEVELED TO MATCH GRADE OF FINISHED ROADWAY.
7. THE LOCATION OF THE ANCHOR BOLTS IN RELATION TO THE SLOTTED HOLES IN THE SOLE PLATE SHALL CORRESPOND WITH THE TEMPERATURE AT THE TIME OF ERECTION. THE ANCHOR BOLTS SHALL BE CENTERED IN THE SLOTTED HOLES AT 60°F. SEE "EXPANSION JOINT DETAILS" FOR TEMPERATURE ADJUSTMENT.

| NO. | DATE | BY | REMARKS |
|---|---|---|---|

REVISIONS

UTAH DEPARTMENT OF TRANSPORTATION
SALT LAKE CITY, UTAH
STRUCTURES DIVISION

DESIGN KMR 11/04 CHECK KTF 11/04
DRAWN RDF 11/04 CHECK JAR 11/04
QUANT. CHECK

APPROVAL RECOMM. DATE SENIOR DESIGN ENGR.
APPROVED FOR USE BY UDOT DATE UDOT BRIDGE ENGR.

I-15; CORRIDOR IN UTAH COUNTY
LEHI 300 WEST OVERPASS
BEARING DETAILS
PROJECT NUMBER SP-15-6(52)241

UTAH
COUNTY

C-342W
DRG. NO.

SHT. 15 OF 26

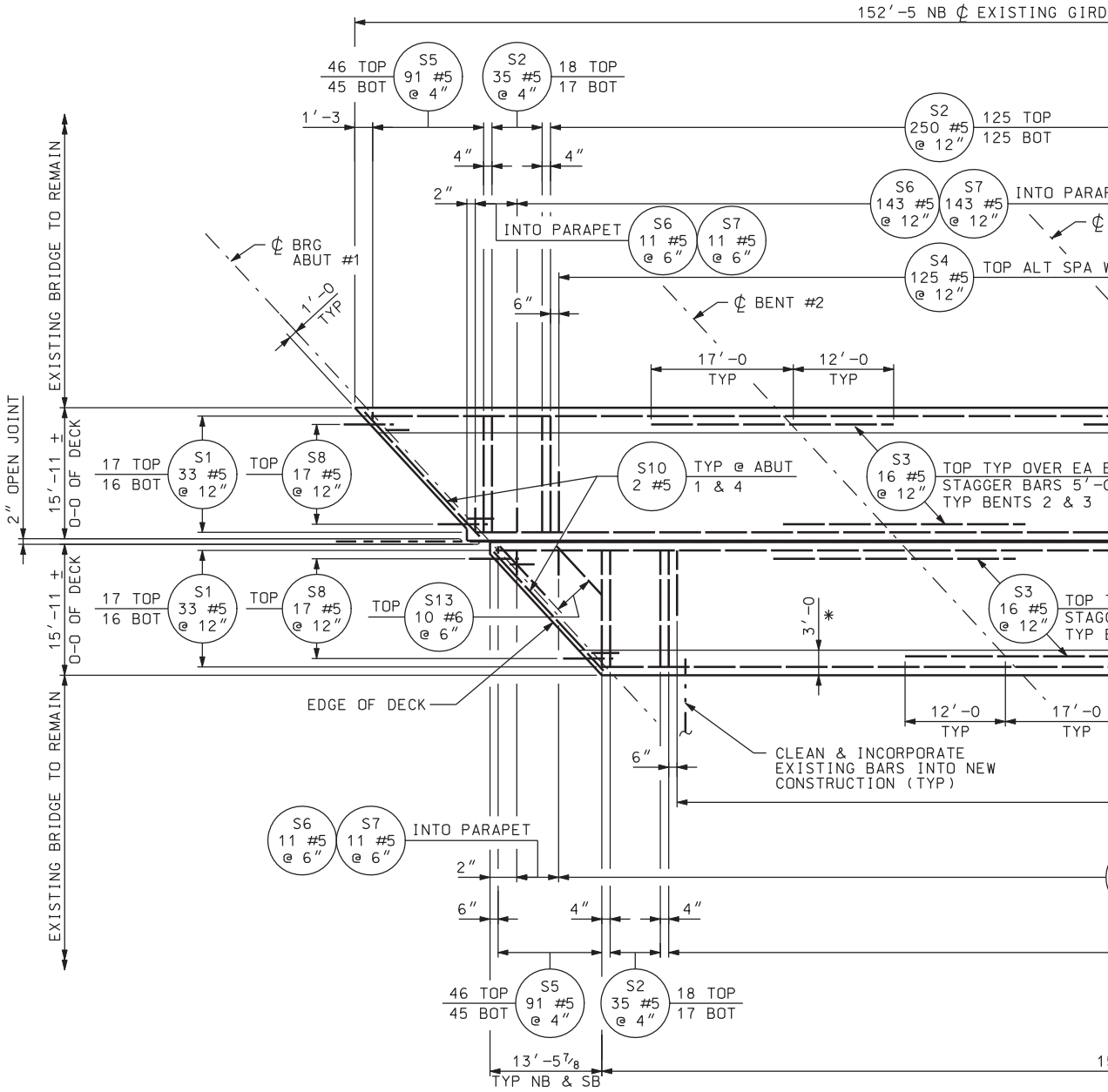


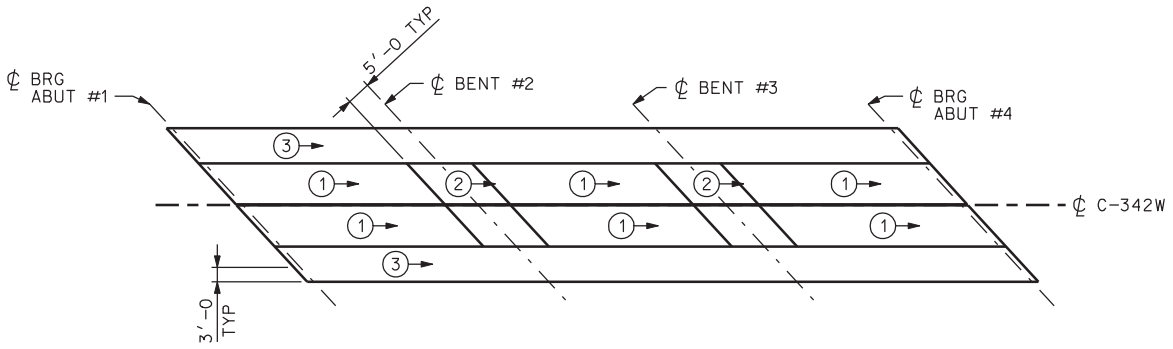


## POUR SEQUENCE

(2) → SEQUENCE NUMBER WITH DIRECTION OF POUR INDICATED

NOTE: PLACE DECK IN SECTIONS AND S
INDICATED. CONTRACTOR MAY SU
ALTERNATE PROCEDURES INCLUDI
COMBINING OF POURS (1) AND (2) F
BY ENGINEER.

DGN File:IP_PWPcdms1717\4433_C-342-16_DCKSLB01.dgn

02-MAY-2005

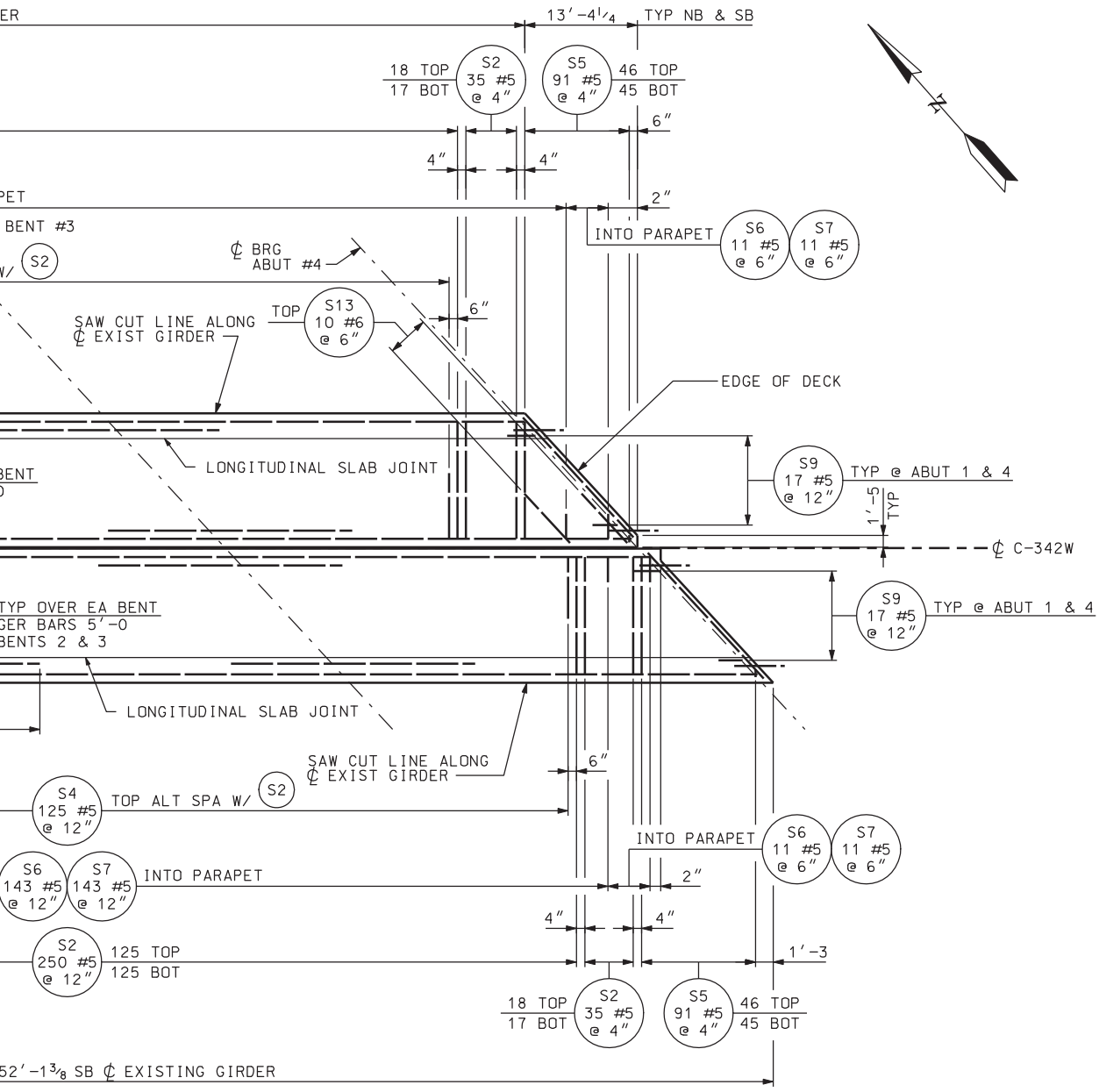


## PLAN

* CLOSURE POUR

SEQUENCE
UBMIT
ING THE
FOR APPROVAL

## NOTES

1. SEE "DECK SECTIONS" FOR ADDITIONAL REINFORCEMENT.
2. SEE "PARAPET DETAILS" FOR PARAPET REINFORCEMENT.
3. MINIMUM LAP LENGTH FOR (S1) BARS: #5 BAR 2′-6. STAGGER SPLICES SUCH THAT NO MORE THAN 50% OF (S1) BARS ARE SPLICED AT A GIVEN LOCATION (TAKEN NORMAL TO ℄ C-340W).
4. STAGGER (S1), (S2) AND (S5) BARS SUCH THAT THE TOP BARS ARE OFFSET 6″ FROM BOTTOM BARS.
5. STAY-IN-PLACE FORMS ARE NOT PERMITTED.

| QUANTITIES STRUCTURAL CONCRETE | |
|---|---|
| DECK NB & SB | 154.7 CY |

| NO. | DATE | BY | REMARKS |
|---|---|---|---|
| | | | |

REVISIONS

UTAH DEPARTMENT OF TRANSPORTATION
SALT LAKE CITY, UTAH
STRUCTURES DIVISION

DESIGN KMR 11/04 CHECK KTF 11/04
DRAWN RDF 11/04 CHECK JAR 11/04
QUANT. JAR 11/04 CHECK KMR 11/04

APPROVAL RECOMM. DATE SENIOR DESIGN ENGR.
APPROVED FOR USE BY UDOT DATE UDOT BRIDGE ENGR.

I-15; CORRIDOR IN UTAH COUNTY
LEHI 300 WEST OVERPASS
DECK SLAB PLAN
PROJECT NUMBER SP-15-6(52)241

UTAH
COUNTY

C-342W
DRG. NO.

SHT. 16 OF 26

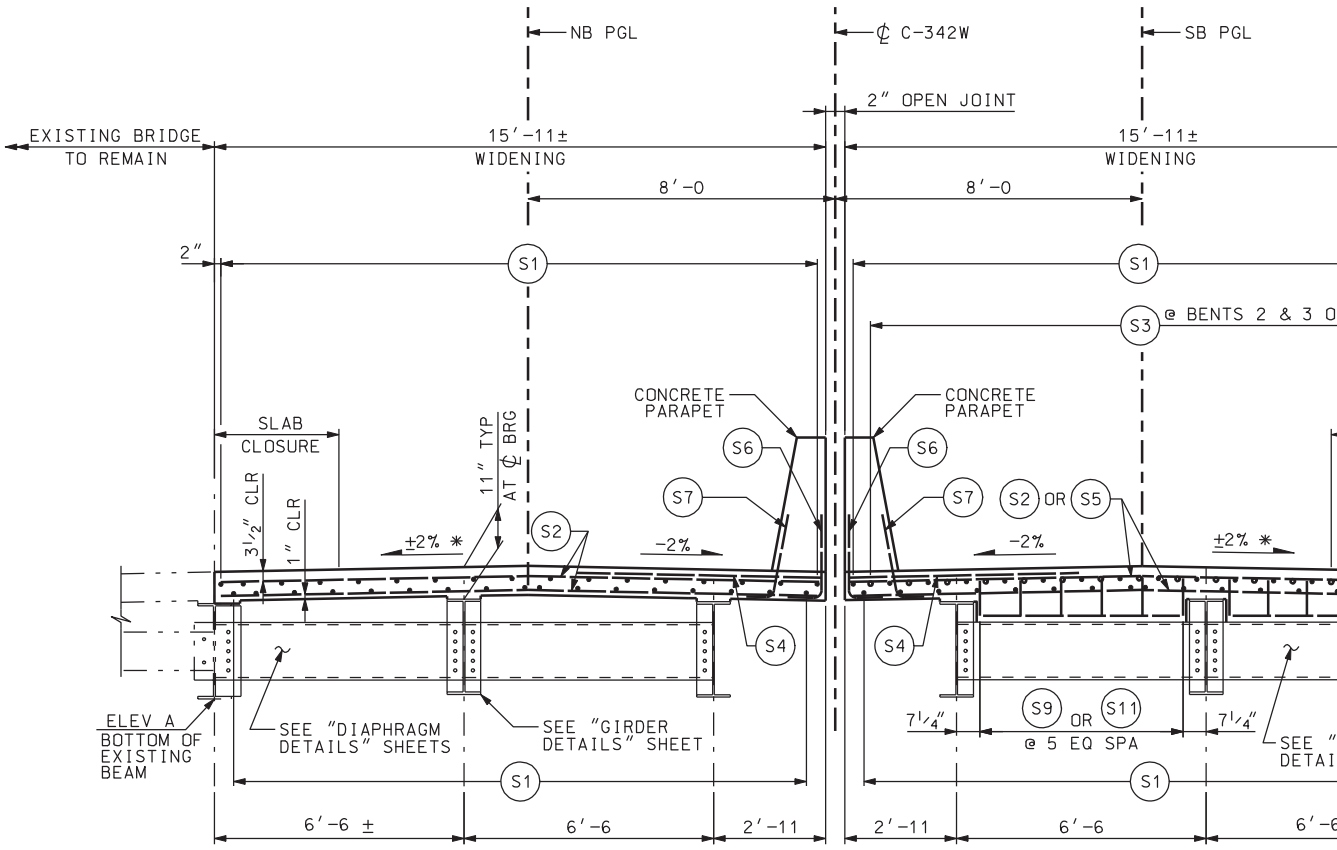


HALF SECTION IN SPAN

HALF SECTION AT BEARING

## TYPICAL CROSS SECTION

* VERIFY EXISTING CROSS SLOPE

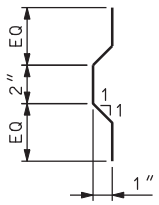


## KEY DETAIL

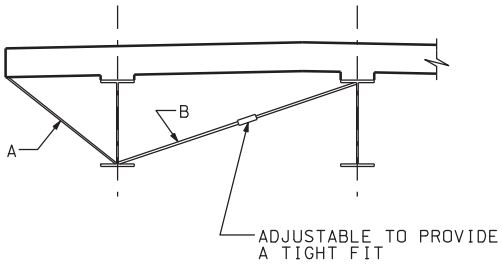


BRACE DECK OVERHANGS DURING PLACEMENT OF DECK AS SHOWN. ENSURE THAT MEMBER "B" IS CAPABLE OF DEVELOPING THE FORCES INDUCED BY MEMBER "A". SHOP DRAWINGS ARE REQUIRED.

## SECTION AT SLAB OVERHANG

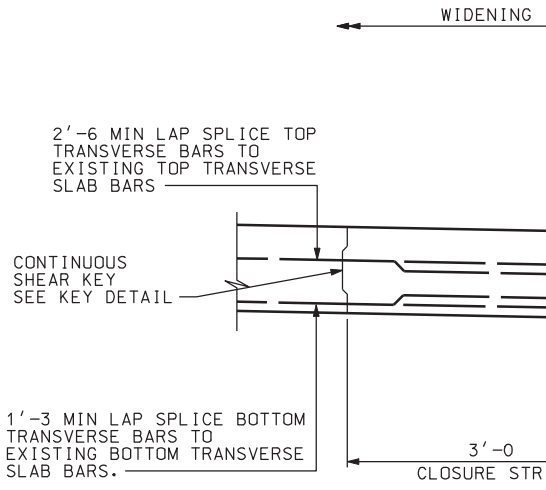


## SLAB C

DGN File:IP_PWPcdns1717\4433_C-342-17_DECK01.dgn

02-MAY-2005

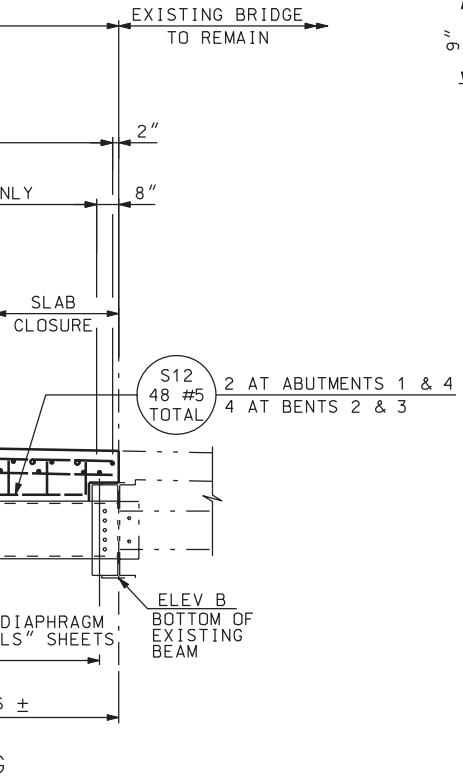


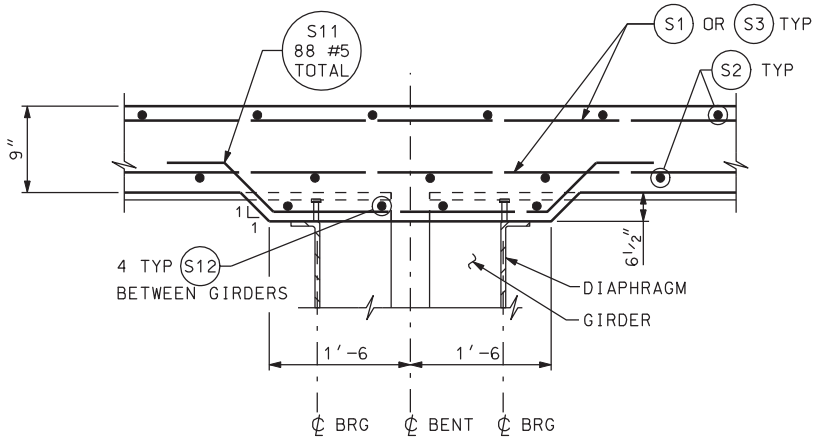


## CONTINUOUS BEARING

BENTS 2 & 3

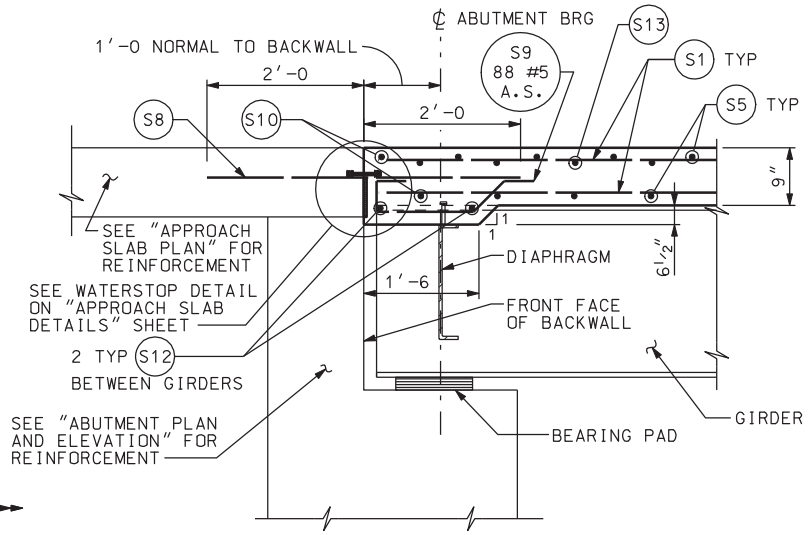


## SECTION THRU END DIAPHRAGM

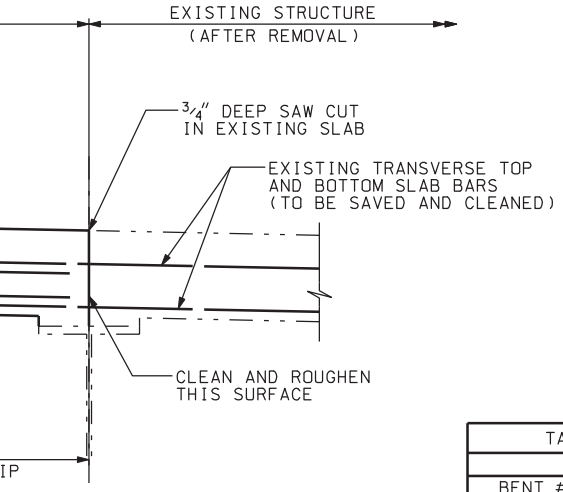


## CLOSURE

| TABULATED ELEVATIONS | | |
|---|---|---|
| | ELEV A | ELEV B |
| BENT #2N | 4576.86 | 4576.78 |
| BENT #2S | 4576.46 | 4576.37 |

FIELD VERIFY THE EXISTING BOTTOM OF BEAM ELEVATIONS ADJACENT TO THE WIDENED PORTIONS OF THE STRUCTURE. CONTACT THE ENGINEER IF THE DISCREPANCY BETWEEN THE SURVEYED AND DETAILED ELEVATIONS EXCEEDS 1". THE ELEVATIONS SHOWN ARE BASED ON SURVEYED ELEVATIONS AT THE NORTH (N) OR SOUTH (S) FACE OF THE BENT CAP.

| NO. | DATE | BY | REMARKS |
|---|---|---|---|
| | | | |

REVISIONS

UTAH DEPARTMENT OF TRANSPORTATION
SALT LAKE CITY, UTAH
STRUCTURES DIVISION

DESIGN KMR 11/04 CHECK KTF 11/04 CHECK JAR 11/04 CHECK
DRAWN RDF 11/04 QUANT.

APPROVAL RECOMM. DATE SENIOR DESIGN ENGR.
APPROVED FOR USE BY UDOT DATE UDOT BRIDGE ENGR.

I-15; CORRIDOR IN UTAH COUNTY
LEHI 300 WEST OVERPASS
DECK SECTIONS
PROJECT NUMBER SP-15-6(52)241

UTAH
COUNTY

C-342W
DRG. NO.

SHT. 17 OF 26

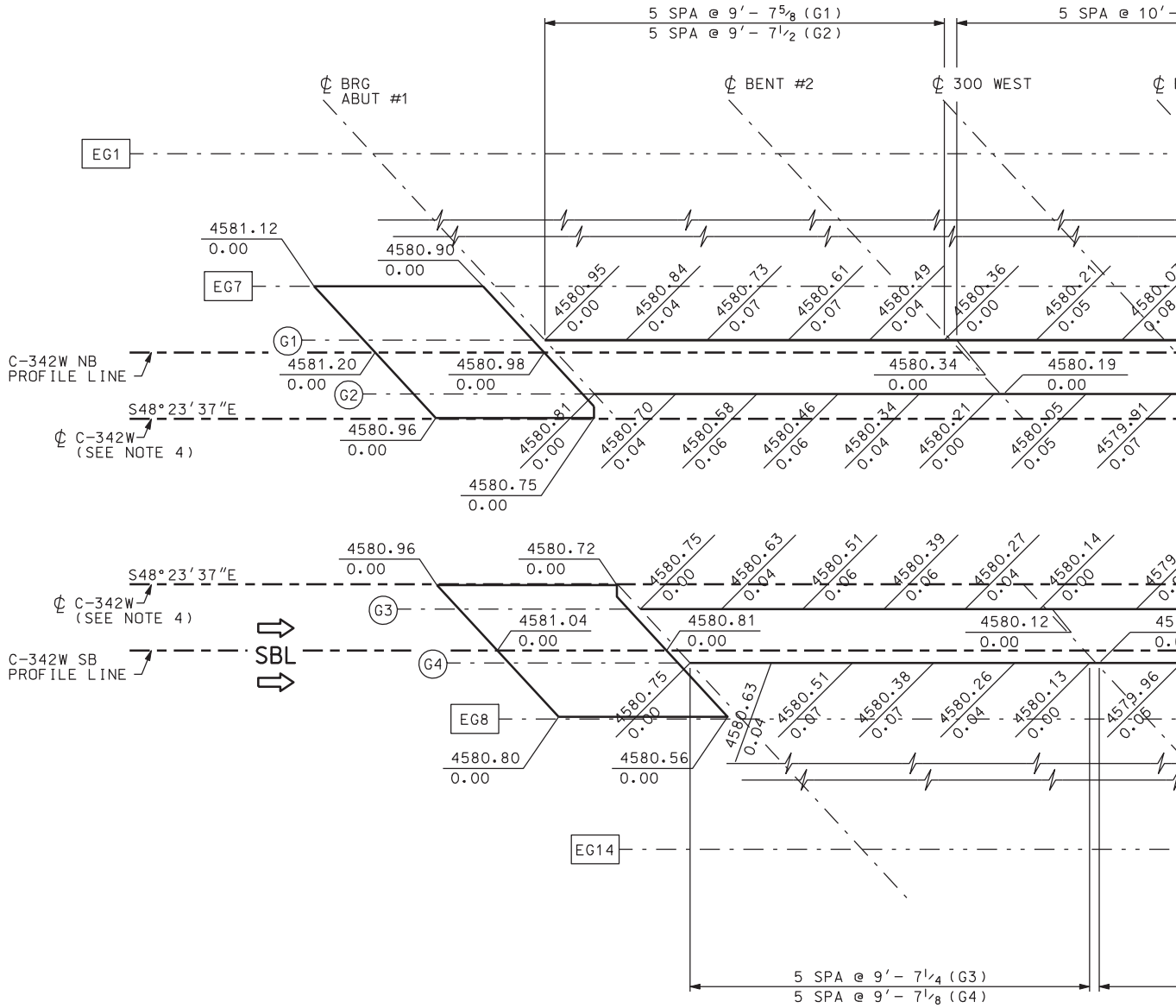


SCREED E

DGN File:IP_PWPcdms1717\4433_C-342-18_SCREED01.dgn

02-MAY-2005

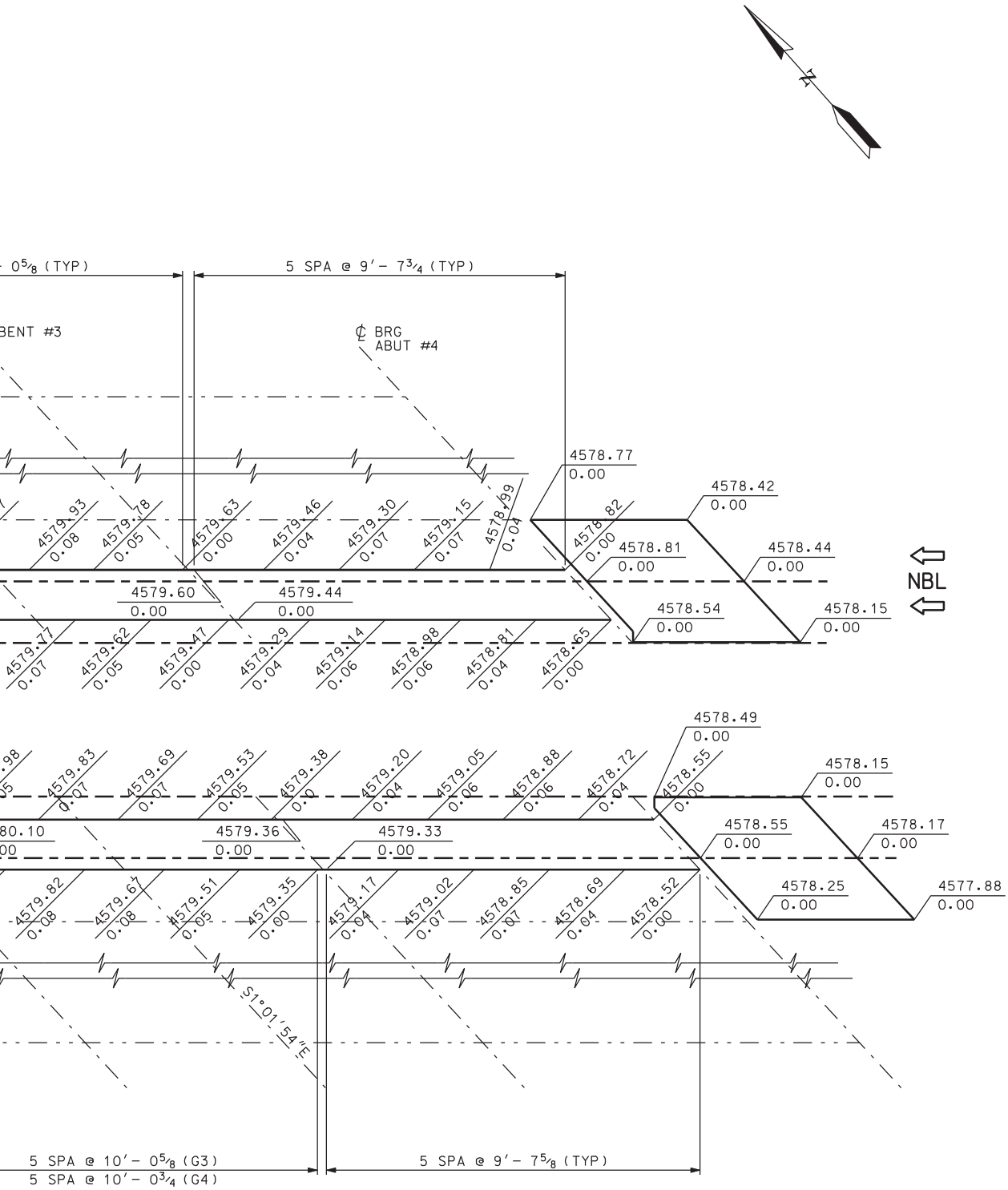


## LEVATIONS

## NOTES

1. FIGURES ABOVE THE LINES ARE FINISHED GRADE ELEVATIONS AT THE TOP OF CONCRETE BEFORE THE OVERLAY IS APPLIED. FIGURES BELOW THE LINES ARE DEADLOAD DEFLECTIONS (FT). ADD THE DEFLECTIONS TO THE FINISHED GRADE ELEVATIONS TO OBTAIN SCREED ELEVATIONS.
2. ALL DIMENSIONS ARE ALONG ℄ GIRDER.
3. VERIFY THE FINISHED GRADE ELEVATIONS TO MATCH THE CROSS-SLOPE OF THE EXISTING STRUCTURE.
4. ℄ C-342W IS SHOWN SEPARATED FOR THE NORTHBOUND AND SOUTHBOUND STRUCTURES TO FACILITATE PRESENTATION OF DATA.
5. COORDINATE APPROACH SLAB ELEVATIONS WITH ROADWAY GRADING.

| NO. | DATE | BY | REMARKS |
|---|---|---|---|

REVISIONS

UTAH DEPARTMENT OF TRANSPORTATION
SALT LAKE CITY, UTAH
STRUCTURES DIVISION

DESIGN JAR 11/04 CHECK KMR 11/04
DRAWN JAR 11/04 CHECK KMR 11/04
QUANT. CHECK

APPROVAL RECOMM. DATE SENIOR DESIGN ENGR.
APPROVED FOR USE BY UDOT DATE UDOT BRIDGE ENGR.

I-15; CORRIDOR IN UTAH COUNTY
LEHI 300 WEST OVERPASS
SCREED ELEVATIONS
PROJECT NUMBER SP-15-6(52)241

UTAH
COUNTY

C-342W
DRG. NO.

SHT. 18 OF 26

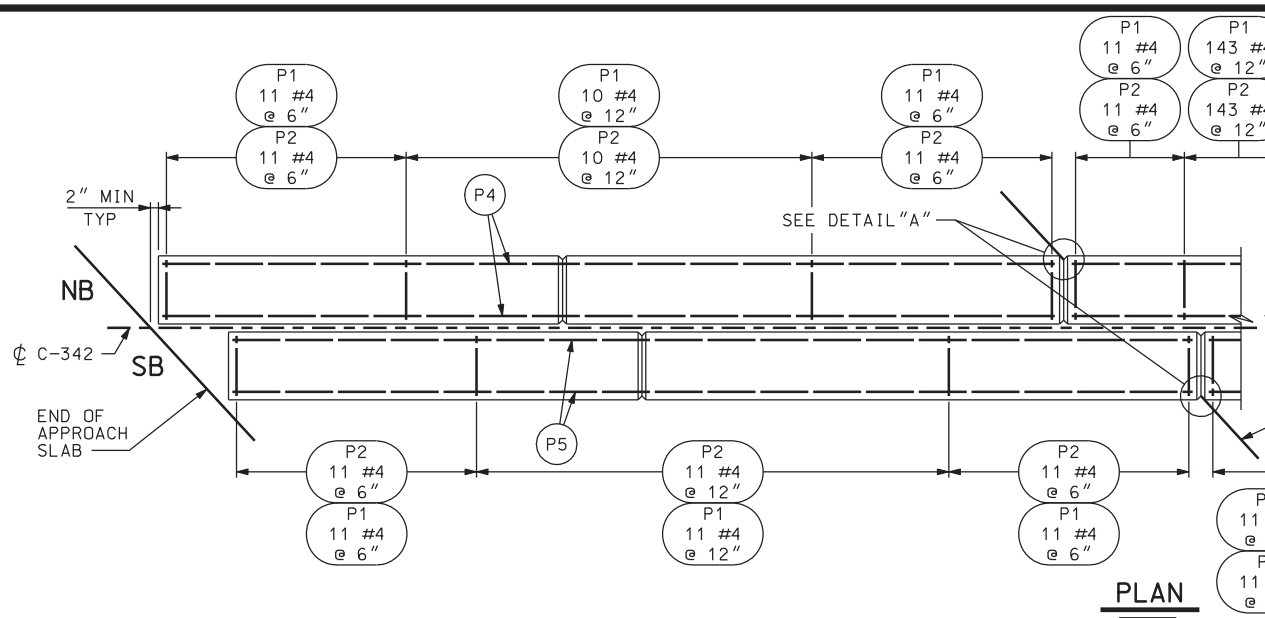


PLAN

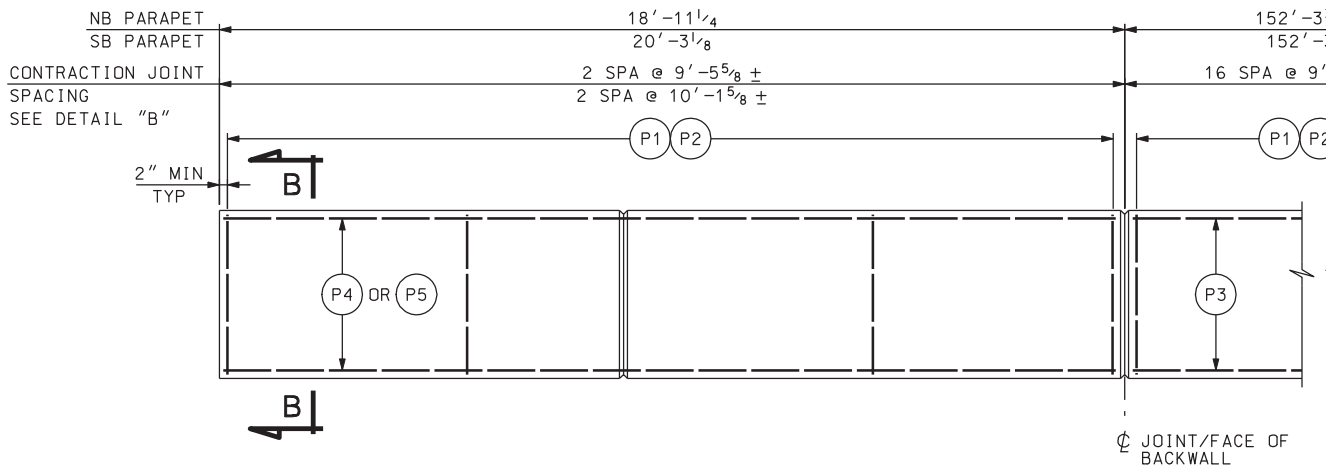


ELEV

ALL DIMENSIONS SHOWN

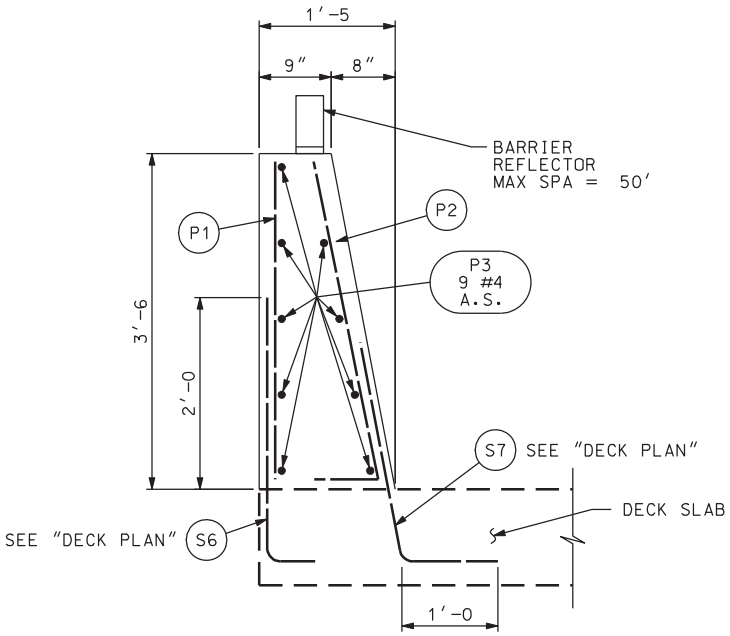


SECTION A-A

NB PARAPET SHOWN, SB SIMILAR

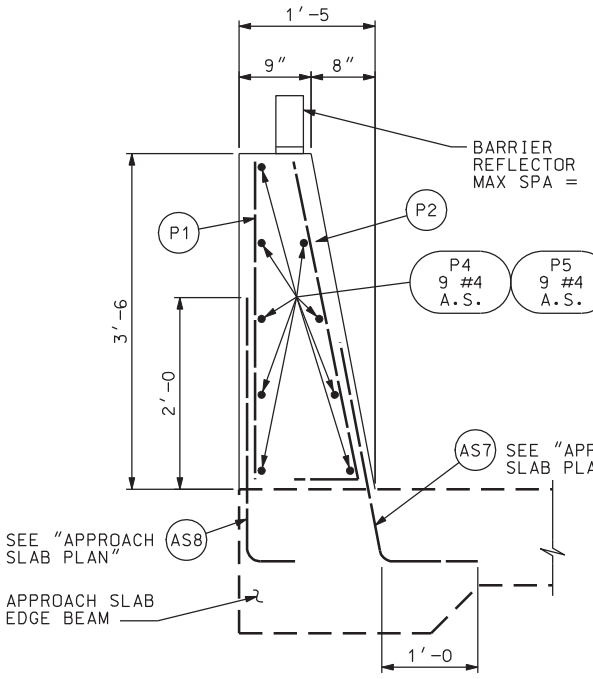


SECTION B-B

NB PARAPET SHOWN, SB SIMILAR

DGN File:IP_PWPcdms1717\4433_C-342-19_PARA01.dgn

02-MAY-2005

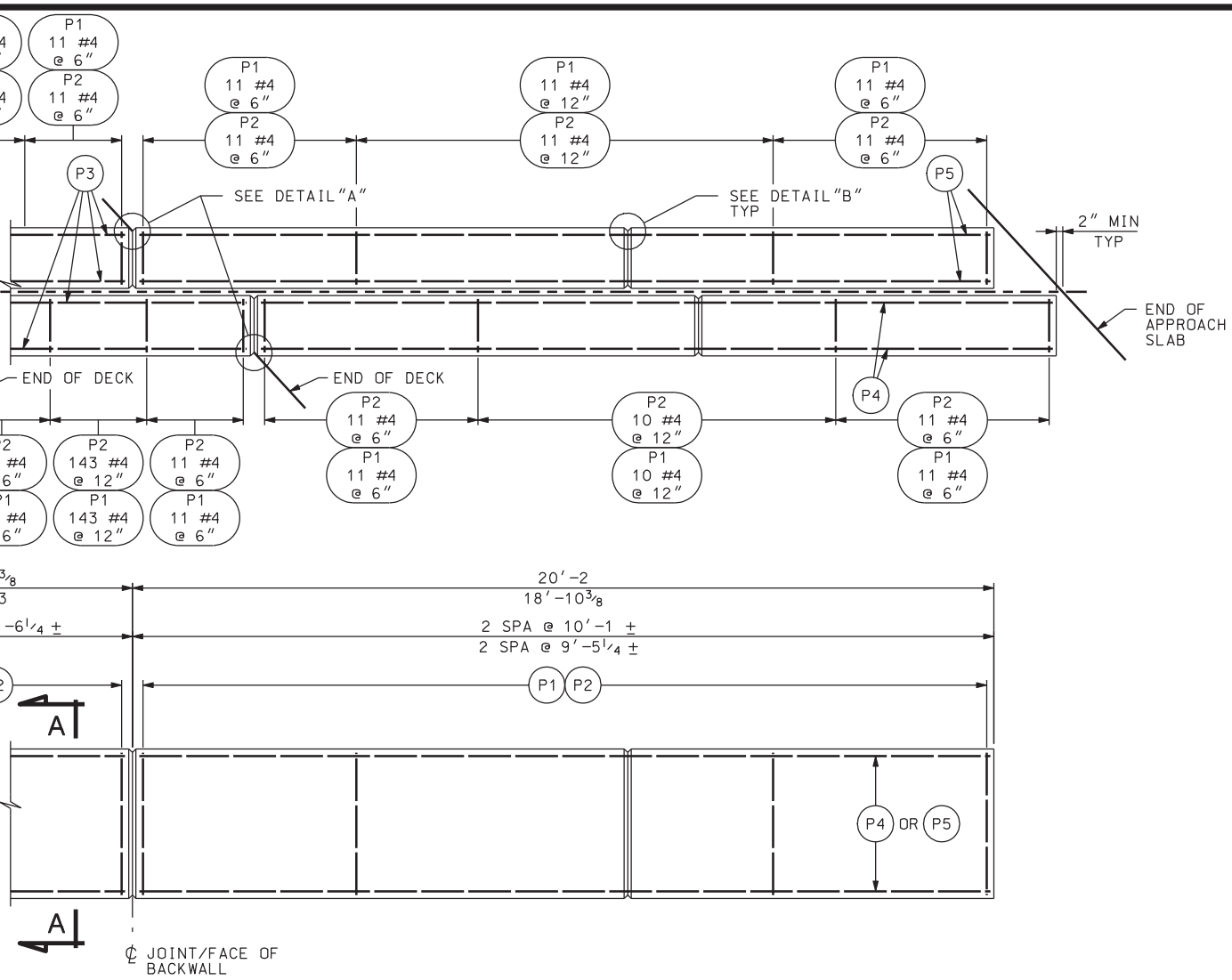


## ATION

ARE ALONG EDGE OF DECK

50′

PROACH AN"

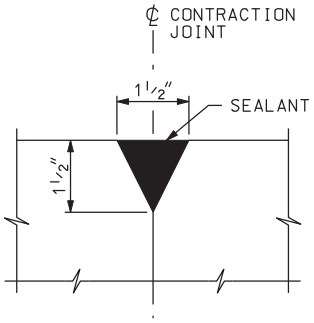


## DETAIL "B"

CONTRACTION JOINT

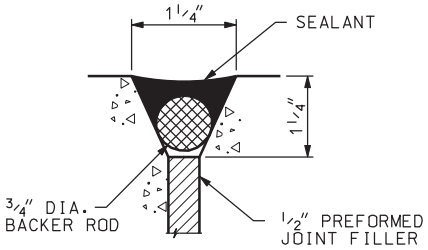


## DETAIL "A"

AT END OF BRIDGE DECK

## NOTES

1. ALTERNATE ALL REINFORCING STEEL SPLICES.
2. PROVIDE 2″ MIN. COVER TO REINFORCING STEEL UNLESS NOTED OTHERWISE.
3. PLACE CONTRACTION JOINT ON SIDES AND TOP OF PARAPET.
4. EXTEND SEALANT AND FOAM BACKER ROD FROM DECK TO TOP OF PARAPET ON THE INSIDE PARAPET FACE AND ACROSS TOP OF PARAPET.
5. FOR END DETAILS OF PARAPET, SEE "PARAPET END DETAILS" SHEET.
6. ADJUST BAR SPACING AS REQUIRED TO NOT EXCEED MAXIMUM SPACING SHOWN.

| QUANTITIES STRUCTURAL CONCRETE | |
|---|---|
| NB & SB PARAPETS | 53.7 CY |

| NO. | DATE | BY | REMARKS |
|---|---|---|---|
| | | | |

REVISIONS

UTAH DEPARTMENT OF TRANSPORTATION
SALT LAKE CITY, UTAH
STRUCTURES DIVISION

DESIGN KMR 11/04 CHECK KTF 11/04
DRAWN RDF 11/04 CHECK JAR 11/04
QUANT. JAR 11/04 CHECK KMR 12/04

APPROVAL RECOMM. DATE SENIOR DESIGN ENGR.
APPROVED FOR USE BY UDOT DATE UDOT BRIDGE ENGR.

I-15; CORRIDOR IN UTAH COUNTY
LEHI 300 WEST OVERPASS
PARAPET DETAILS

PROJECT NUMBER SP-15-6(52)241

UTAH COUNTY

C-342W DRG. NO.

SHT. 19 OF 26

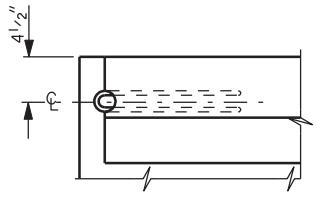


PLAN

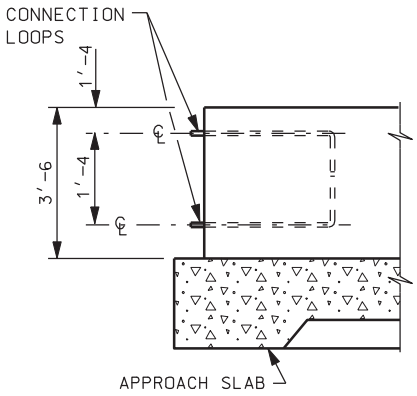


ELEVATION

STANDARD END DETAILS

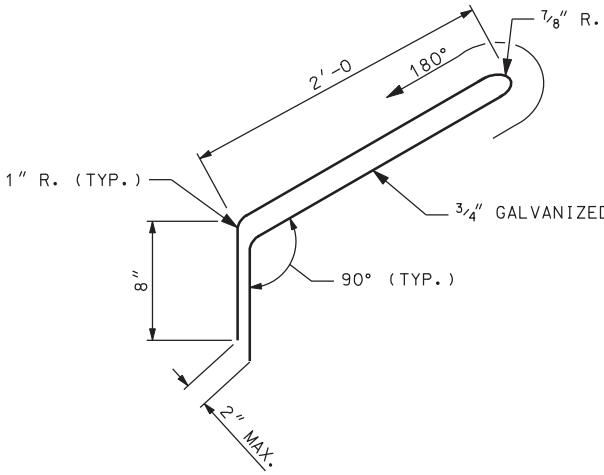


CONNECTION LOOP DETAIL

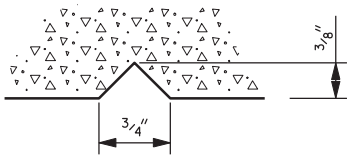


TYPICAL SECTION

THRU STRUCTURE NUMBER

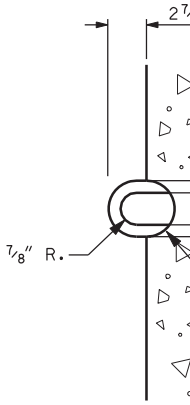


CON

DGN File:IP_PWPcdms1717\4433_C-342-20_PAREND01.dgn
02-MAY-2005

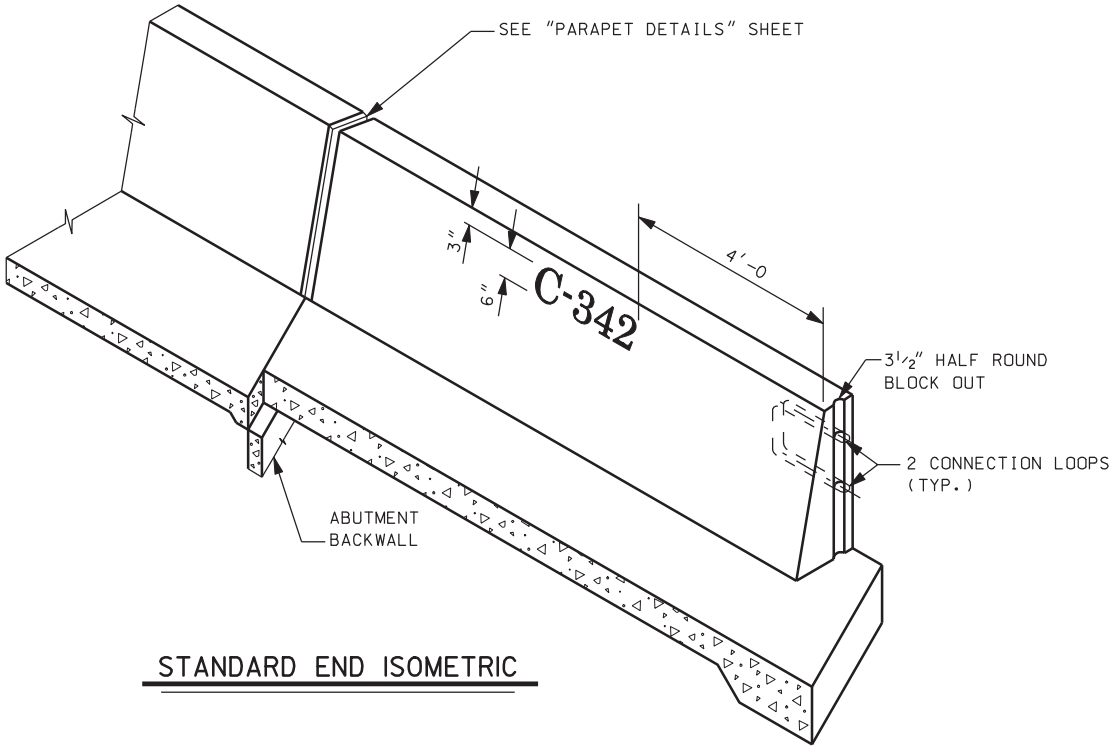


STANDARD END ISOMETRIC

D STEEL BAR

8"

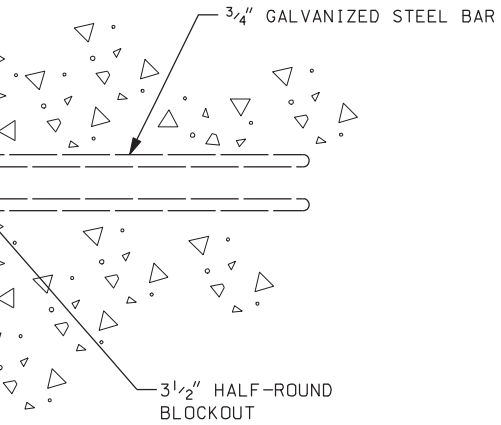


NECTION BAR END DETAIL

## NOTES

1. INSTALL CONNECTION LOOPS AT ALL PARAPET ENDS.
2. CONNECTION LOOPS NOT INCLUDED IN REINFORCING STEEL SCHEDULE.
3. SEE ROADWAY DRAWING DT-08 FOR TRANSITION FROM PARAPET TO PRECAST BARRIER.

| NO. | DATE | BY | REMARKS |
|---|---|---|---|

REVISIONS

UTAH DEPARTMENT OF TRANSPORTATION
SALT LAKE CITY, UTAH
STRUCTURES DIVISION

DESIGN KMR 11/04 CHECK KTF 11/04
DRAWN RDF 11/04 CHECK JAR 11/04
QUANT. CHECK

APPROVAL RECOMM. DATE SENIOR DESIGN ENGR.
APPROVED FOR USE BY UDOT DATE UDOT BRIDGE ENGR.

I-15; CORRIDOR IN UTAH COUNTY
LEHI 300 WEST OVERPASS
PARAPET END DETAILS
PROJECT NUMBER SP-15-6(52)241

UTAH
COUNTY

C-342W
DRG. NO.

SHT. 20 OF 26

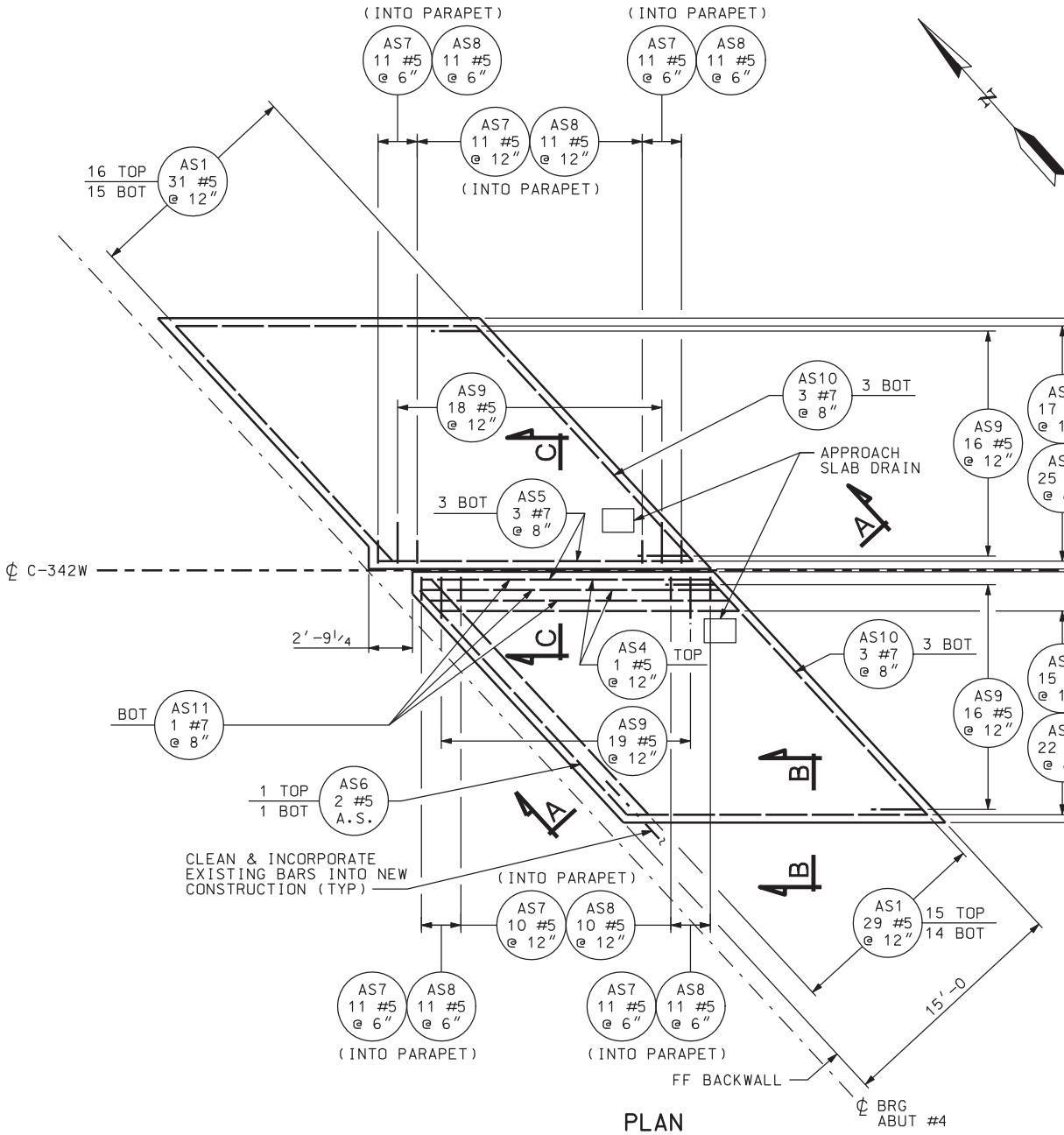


## PLAN

ABUT #4 APPROACH SLAB SHOWN, ABUT #1 SIMILAR

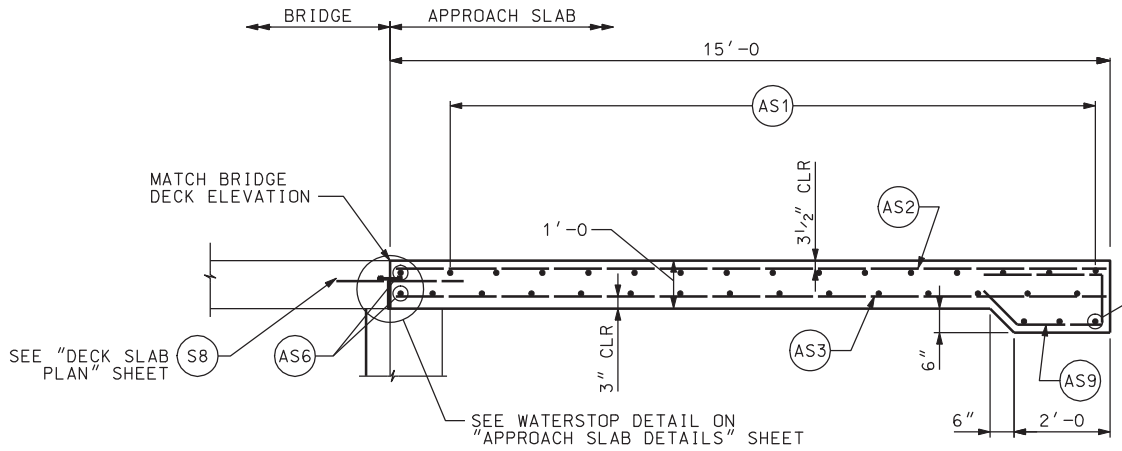


## SECTION A-A

DGN File: IP_PWPcdms1717\4433_C-342-21_APPSLB01.dgn

02-MAY-2005

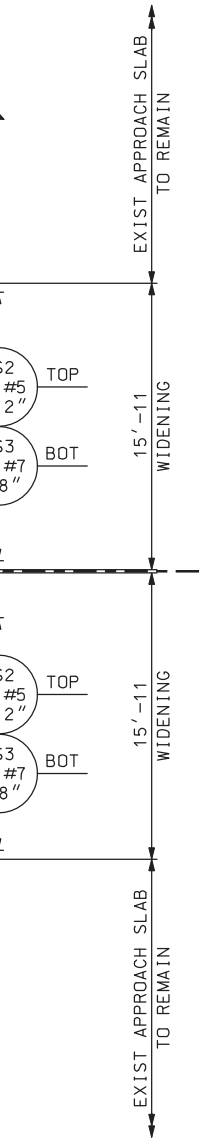


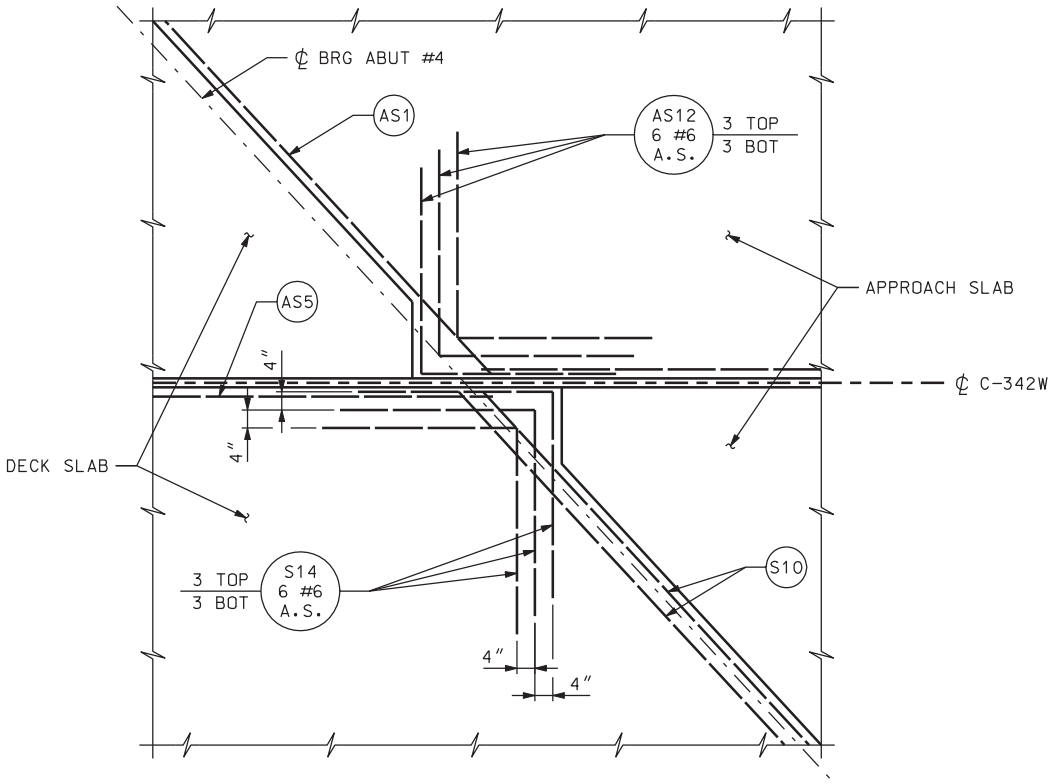


## CORNER REINFORCING DETAIL

ABUT #4 IS SHOWN, ABUT #1 IS SIMILAR
SEE "DECK SLAB PLAN" SHEET AND APPROACH
SLAB PLAN FOR REINFORCING NOT SHOWN FOR CLARITY

| APPROACH SLAB DRAIN LOCATIONS | |
|---|---|
| STATION | OFFSET |
| 1202+84.90 | 2.67' LT |
| 1202+89.80 | 2.67' RT |

## NOTES

1. SEE "APPROACH SLAB DETAILS" SHEET FOR SECTIONS B-B AND C-C.
2. FOR APPROACH SLAB ELEVATIONS, SEE "SCREED ELEVATIONS" SHEET.
3. APPROACH SLAB DRAIN LOCATIONS SHOWN ARE AT CENTER OF DRAIN GRATE. SEE "APPROACH SLAB DRAIN DETAILS".
4. STAGGER (AS1) BARS SUCH THAT THE TOP BARS ARE OFFSET 6" FROM BOTTOM BARS.
5. APPROACH SLAB DRAIN LOCATIONS INDICATED ARE TO THE CENTER OF THE GRATE.

| QUANTITIES STRUCTURAL CONCRETE | |
|---|---|
| APPROACH NB & SB | 56.6 CY |

| NO. | DATE | BY | REMARKS |
|---|---|---|---|
| | | | |

REVISIONS

UTAH DEPARTMENT OF TRANSPORTATION
SALT LAKE CITY, UTAH
STRUCTURES DIVISION

DESIGN KMR 11/04 CHECK KTF 11/04
DRAWN RDF 11/04 CHECK JAR 11/04
QUANT. JAR 11/04 CHECK KMR 11/04

APPROVAL RECOMM. DATE SENIOR DESIGN ENGR.
APPROVED FOR USE BY UDOT DATE UDOT BRIDGE ENGR.

I-15; CORRIDOR IN UTAH COUNTY
LEHI 300 WEST OVERPASS
APPROACH SLAB PLAN
PROJECT NUMBER SP-15-6(52)241

UTAH
COUNTY

C-342W
DRG. NO.

SHT. 21 OF 26

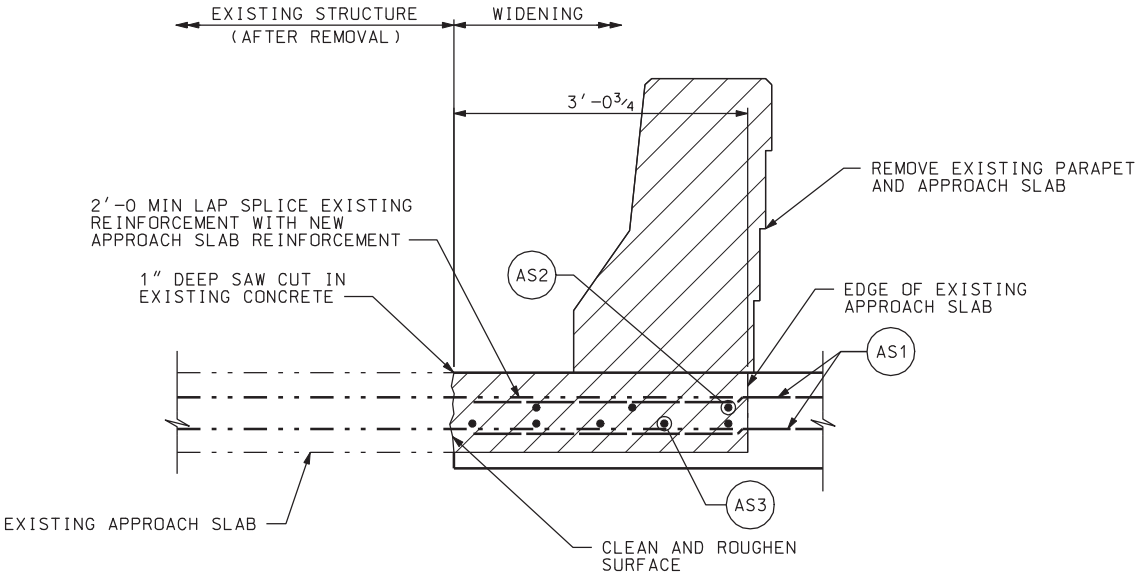


## SECTION B-B

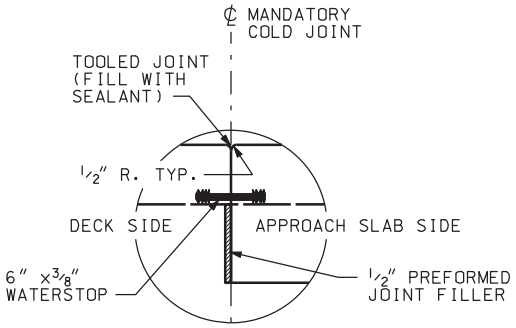


## WATERSTOP DETAIL

NOTE: THE COST OF CONCRETE REMOVAL IS INCIDENTAL TO THE COST OF "PREPARE BRIDGE FOR WIDENING" BID ITEM. SEE THE SPECIAL PROVISIONS FOR "PREPARE BRIDGE WIDENING".

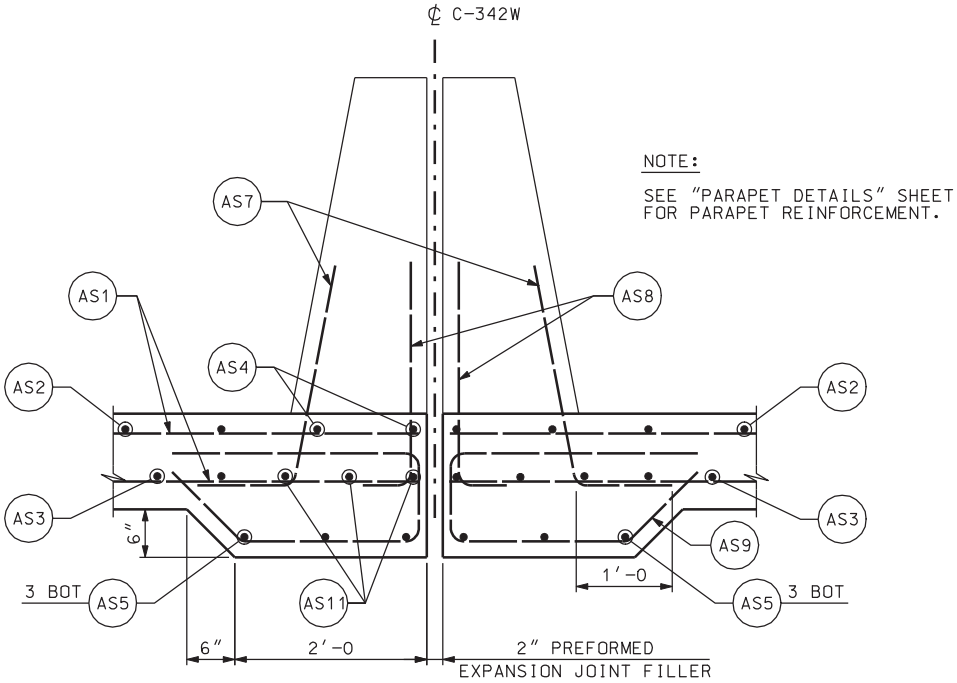


## SECTION C-C

| NO. | DATE | BY | REMARKS |
|---|---|---|---|

REVISIONS

UTAH DEPARTMENT OF TRANSPORTATION
SALT LAKE CITY, UTAH
STRUCTURES DIVISION

DESIGN KMR 11/04 CHECK KTF 11/04
DRAWN RDF 11/04 CHECK JAR 11/04
QUANT. CHECK

APPROVAL RECOMM. DATE SENIOR DESIGN ENGR.
APPROVED FOR USE BY UDOT DATE UDOT BRIDGE ENGR.

I-15; CORRIDOR IN UTAH COUNTY
LEHI 300 WEST OVERPASS
APPROACH SLAB DETAILS

PROJECT NUMBER SP-15-6(52)241

UTAH
COUNTY

C-342W
DRG. NO.

SHT. 22 OF 26

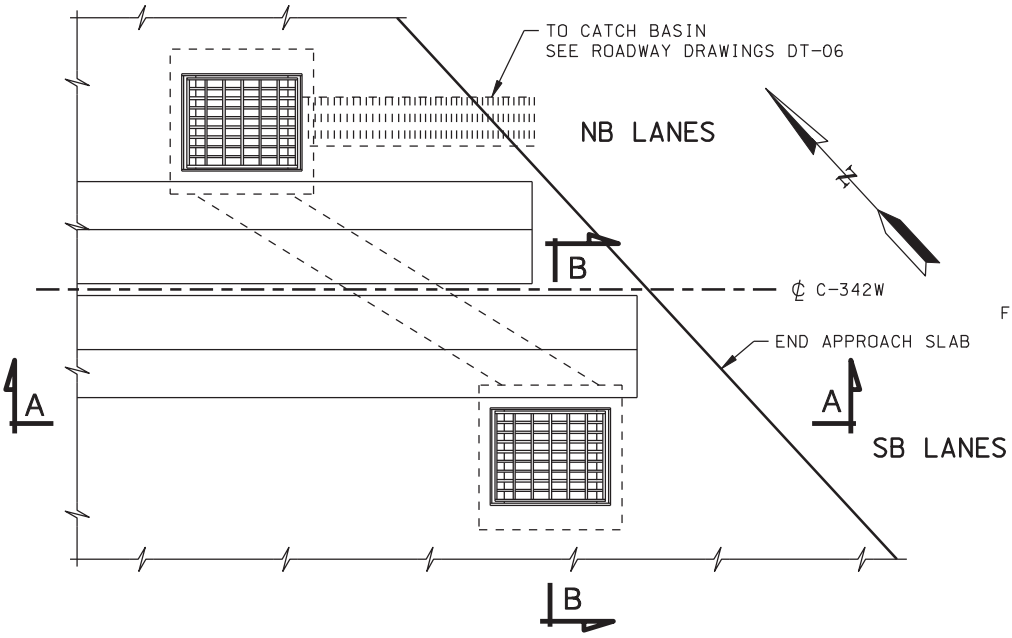


TYPICAL PLAN

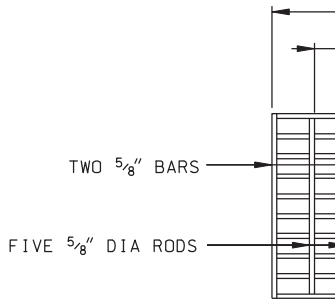


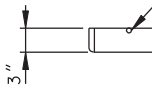


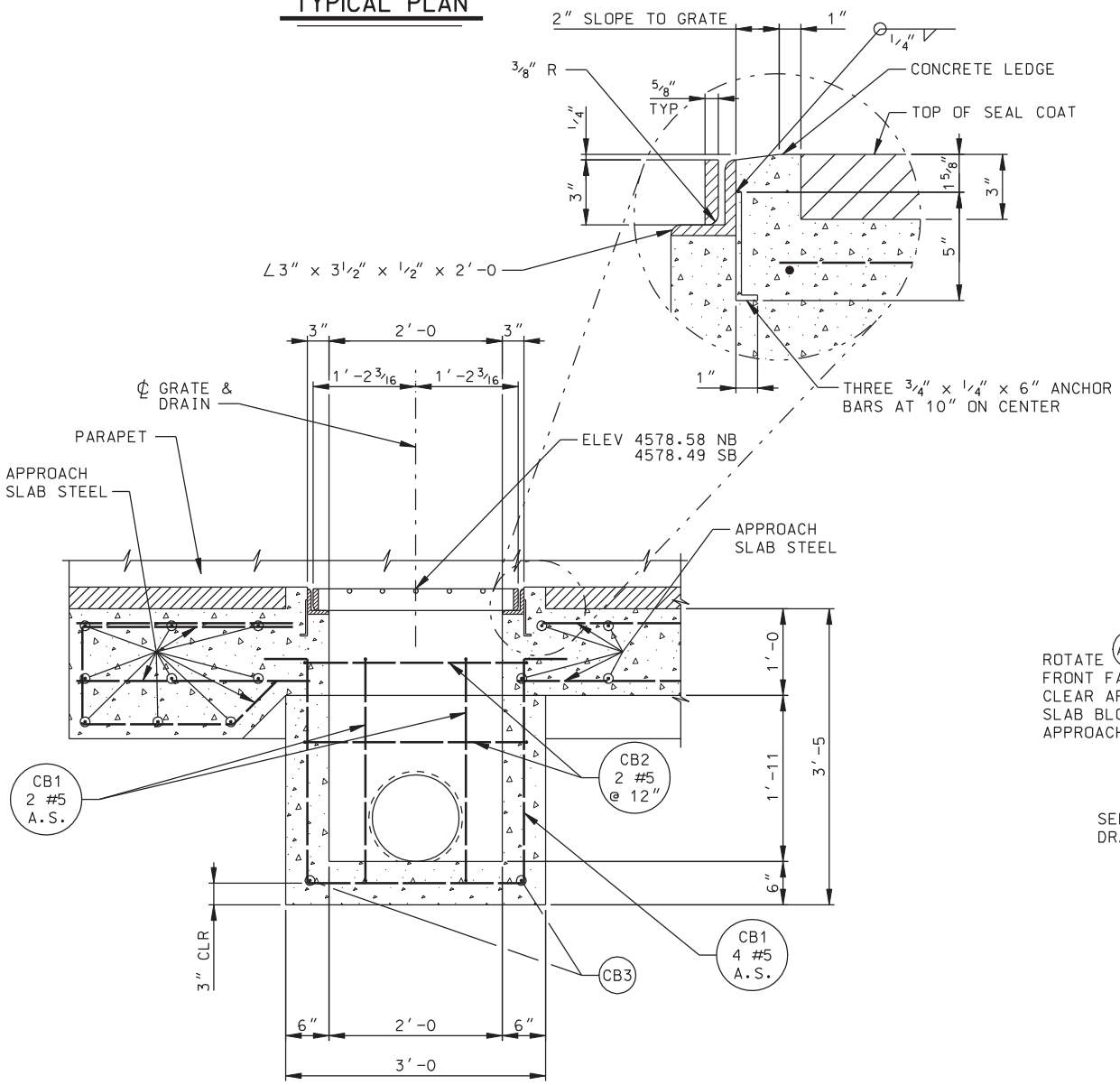


SECTION A-A

ROTATE (AS7) BA
FRONT FACE 90
CLEAR APPROAC
SLAB BLOCK OU
APPROACH SLAB

SEE ROA
DRAWING

DGN File:IP_PWPcdms1717\4433_C-342-23_APPDRN01.dgn

02-MAY-2005

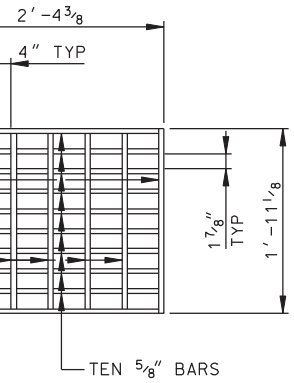


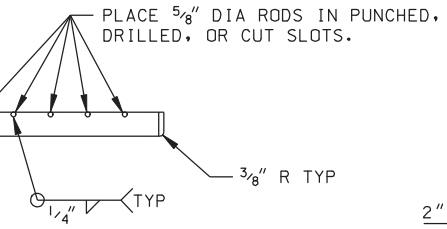


GRATE DETAIL

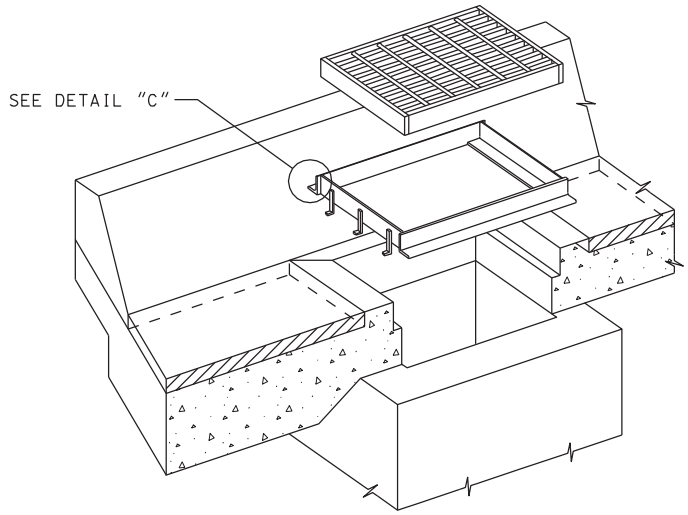


ISOMETRIC

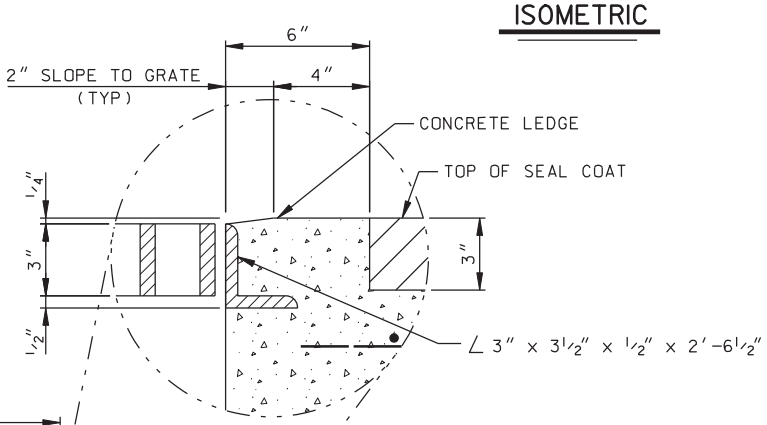


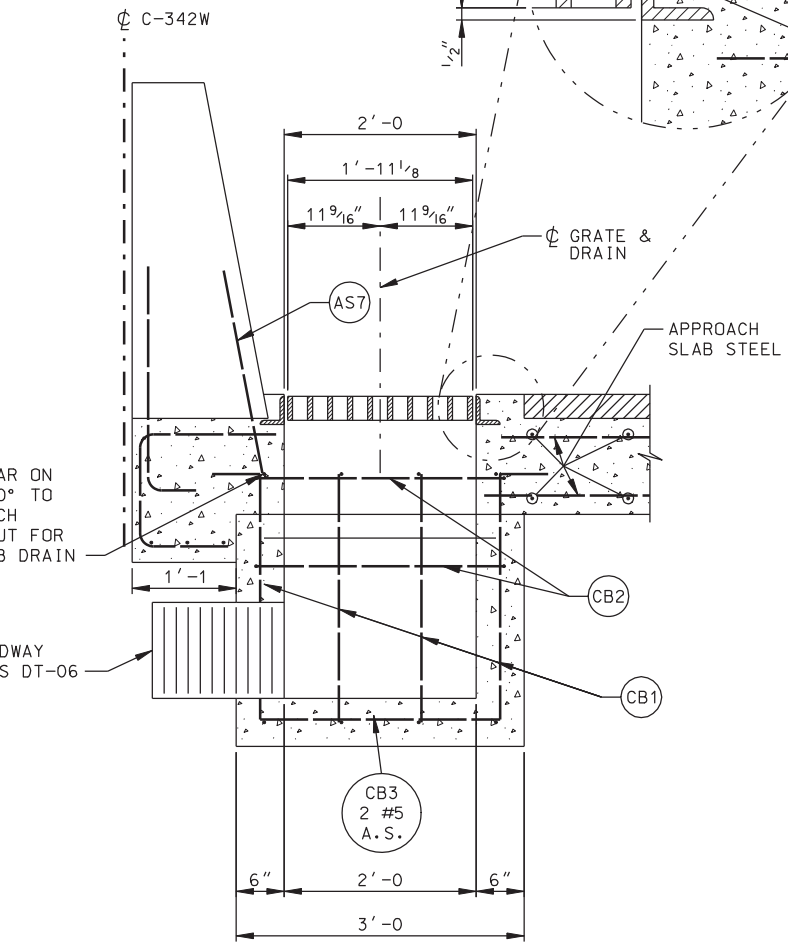


SECTION B-B

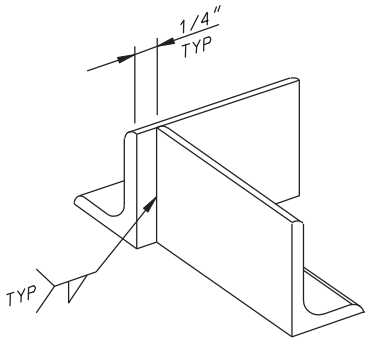


DETAIL "C"

## GENERAL NOTES

1. FIELD CUT OR BEND APPROACH SLAB REINFORCING TO CLEAR APPROACH SLAB DRAINS.
2. SEE "APPROACH SLAB PLAN" FOR THE ACTUAL LOCATION OF THE DRAIN.

| QUANTITIES STRUCTURAL CONCRETE | |
|---|---|
| 2 CATCH BASINS | 1.0 CY |
| **QUANTITIES STRUCTURAL STEEL** | |
| 2 GRATES & FRAMES | 546 LBS |

| NO. | DATE | BY | REMARKS |
|---|---|---|---|
| | | | |

REVISIONS

UTAH DEPARTMENT OF TRANSPORTATION
SALT LAKE CITY, UTAH
STRUCTURES DIVISION

DESIGN KMR 10/04 CHECK PBB 12/04
DRAWN RDF 10/04 CHECK PBB 12/04
QUANT. KMR 11/04 CHECK PBB 12/04

APPROVAL RECOMM. DATE SENIOR DESIGN ENGR.
APPROVED FOR USE BY UDOT DATE UDOT BRIDGE ENGR.

I-15; CORRIDOR IN UTAH COUNTY
LEHI 300 WEST OVERPASS
APPROACH SLAB DRAIN DETAILS

PROJECT NUMBER SP-15-6(52)241

UTAH
COUNTY

C-342W
DRG. NO.

SHT. 23 OF 26

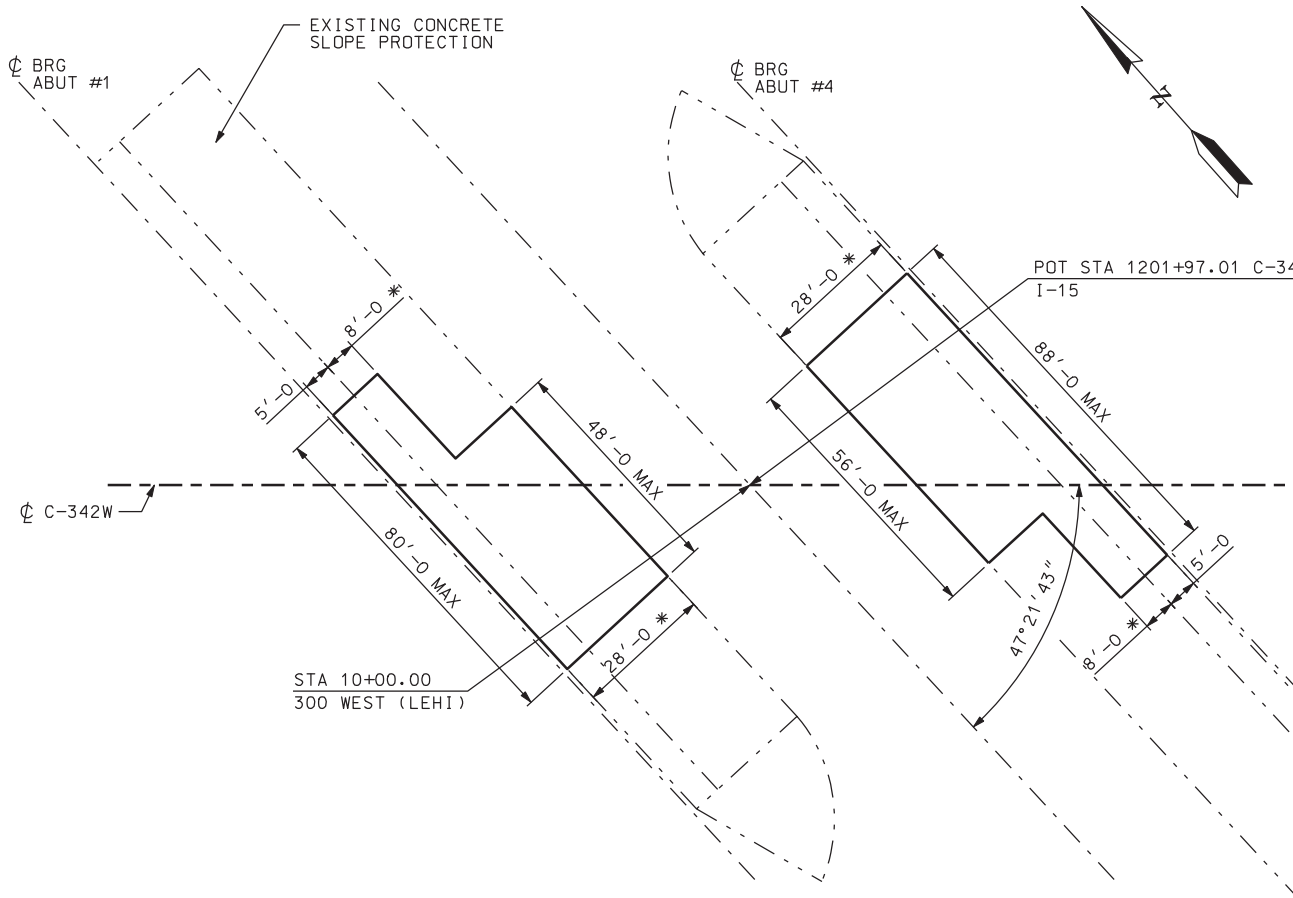


* MEASURED ALONG SLOPE

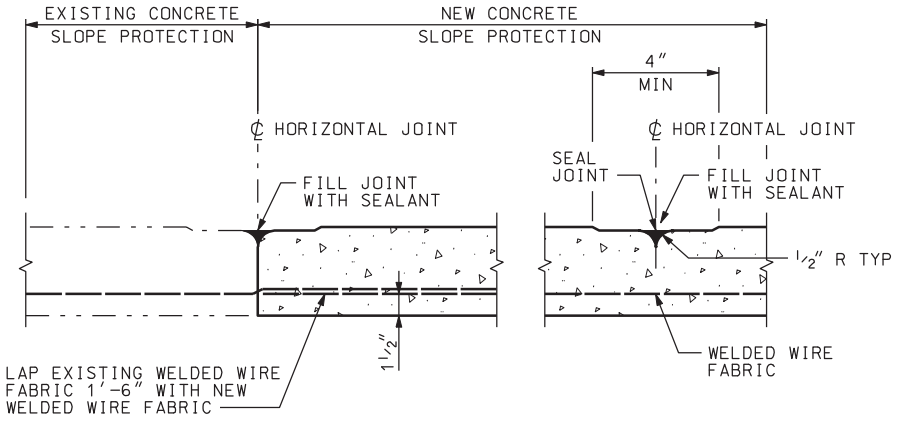


## HORIZONTAL JOINT DETAIL

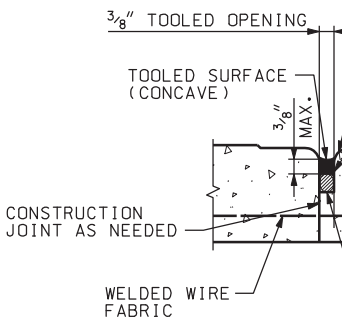


DGN File: IP_PWPcdns1717\4433_C-342-24_SLOPE01.dgn

02-MAY-2005

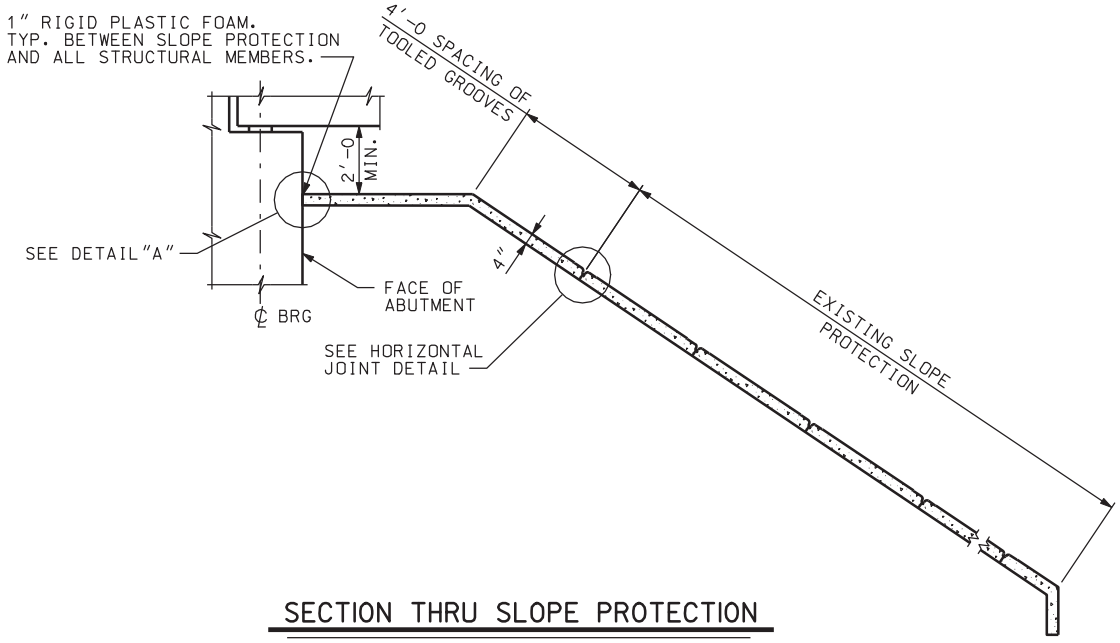


## SECTION THRU SLOPE PROTECTION

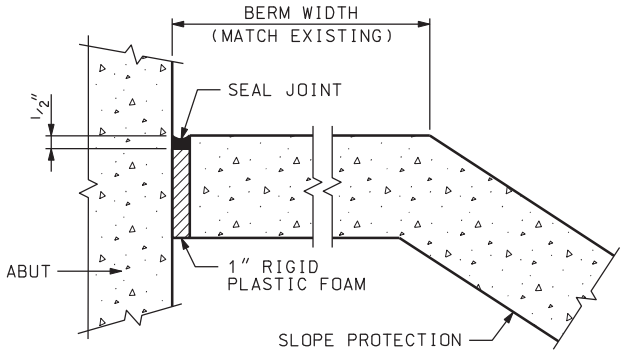


## DETAIL "A"

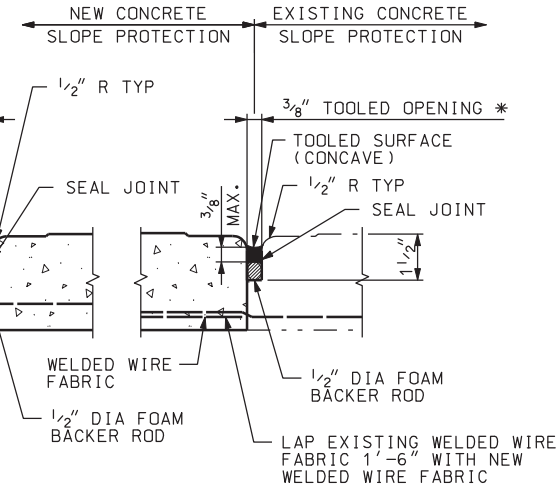


* NOTE: TOOL OPENING IN THE NEW CONCRETE SLOPE PROTECTION IF REQUIRED.

## VERTICAL JOINT DETAIL

## NOTES

1. QUANTITIES GIVEN FOR CONCRETE SLOPE PROTECTION ARE ESTIMATES ONLY AND ARE BASED ON THE EXPOSED FINISHED CONCRETE SURFACE AREA AT TIME OF PLACEMENT.
2. MATCH SPACING OF HORIZONTAL AND VERTICAL JOINTS OF THE EXISTING SLOPE PROTECTION.
3. MATCH THE ELEVATION AND SLOPE OF THE EXISTING SLOPE PROTECTION.
4. JUST PRIOR TO FINAL INSPECTION SEAL JOINTS BETWEEN THE CONCRETE SLOPE PROTECTION AND ALL STRUCTURAL MEMBERS.
5. USE CLASS A (AE) CONCRETE FOR ALL SLOPE PROTECTION.
6. USE WELDED WIRE FABRIC 6" x 6" - W 1.4 x W 1.4.

| QUANTITIES | |
|---|---|
| REPLACE CONCRETE SLOPE PROTECTION | 496 SQ. YDS |

| NO. | DATE | BY | REMARKS |
|---|---|---|---|
| | | | |

REVISIONS

UTAH DEPARTMENT OF TRANSPORTATION
SALT LAKE CITY, UTAH
STRUCTURES DIVISION

DESIGN PBB 10/04 CHECK JW 10/04
DRAWN RDF 10/04 CHECK JW 10/04
QUANT. PBB 10/04 CHECK JW 10/04

APPROVAL RECOMM. DATE SENIOR DESIGN ENGR.
APPROVED FOR USE BY UDOT DATE UDOT BRIDGE ENGR.

I-15; CORRIDOR IN UTAH COUNTY
LEHI 300 WEST OVERPASS
CONCRETE SLOPE PROTECTION
PROJECT NUMBER SP-15-6(52)241

UTAH
COUNTY

C-342W
DRG. NO.

SHT. 24 OF 26

# REINFORCING ST

| | MARK | SIZE | NUM | LENGTH | TOTAL | DIAGRAM |
|---|---|---|---|---|---|---|
| DECK | S1 | 5 | 66 | 159′-6 | 10,527′-0 | 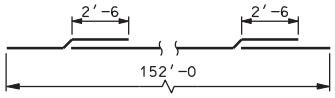  |
| | NUMBER OF SPLICES = 3 | | | | | |
| | S2 | 5 | 640 | 15′-7 | 9,973′-4 | 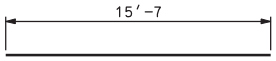  |
| | S3 | 5 | 64 | 29′-0 | 1856′-0 | 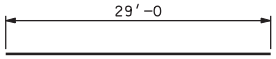  |
| | S4 | 5 | 250 | 6′-0 | 1500′-0 | 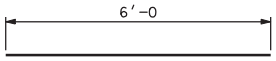  |
| | S5 | 5 | 364 | 8′-3½ | 3018′-2 | 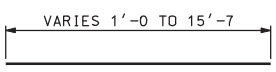  |
| | NO OF SETS | 4 | | | | |
| | BARS/ SET | 91 | | | | |
| | S6 | 5 | 330 | 3′-1 | 1017′-6 | 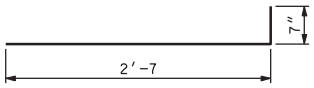  |
| | S7 | 5 | 330 | 3′-7 | 1182′-6 | 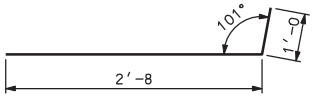  |
| | S8 | 5 | 68 | 4′-0 | 272′-0 | 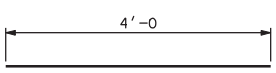  |
| | S9 | 5 | 88 | 3′-3 | 286′-0 | 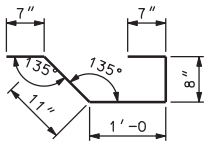  |
| | S10 | 5 | 8 | 19′-3 | 154′-0 | 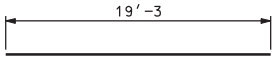  |
| | S11 | 5 | 88 | 5′-2 | 454′-8 | 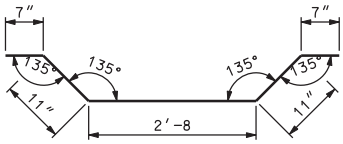  |
| | S12 | 5 | 48 | 7′-8 | 368′-0 | 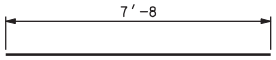  |
| | S13 | 6 | 20 | 8′-0 | 160′-0 | 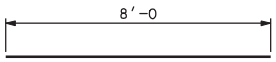  |
| | S14 | 6 | 12 | 7′-2 | 86′-0 | 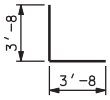  |
| APPROACH SLABS | AS1 | 5 | 120 | 21′-2 | 2540′-0 | 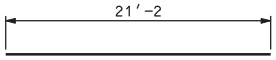  |
| | AS2 | 5 | 64 | 19′-11 | 1274′-8 | 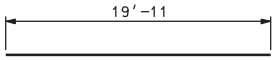  |
| | AS3 | 7 | 94 | 19′-11 | 1872′-2 | 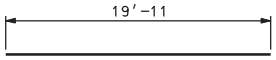  |
| | AS4 | 5 | 4 | 18′-6 | 74′-0 | |

| | MARK | SIZE | NUM | LENGTH | TOTA |
|---|---|---|---|---|---|
| APPROACH SLABS | AS5 | 7 | 12 | 18′-6 | 222′ |
| | AS6 | 5 | 4 | 19′-9 | 79′ |
| | AS7 | 5 | 130 | 3′-7 | 465′ |
| | AS8 | 5 | 130 | 3′-1 | 400′ |
| | AS9 | 5 | 138 | 5′-6 | 759′ |
| | AS10 | 7 | 12 | 21′-2 | 254′ |
| | AS11 | 7 | 6 | 18′-6 | 111′ |
| | AS12 | 6 | 12 | 7′-2 | 86′ |
| PARAPETS | P1 | 4 | 460 | 3′-2 | 1456 |
| | P2 | 4 | 460 | 3′-9 | 1725 |
| | P3 | 4 | 18 | 159′-5 | 2869 |
| | NUMBER OF SPLICES = 3 | | | | |
| | P4 | 4 | 18 | 18′-7 | 334′ |
| | P5 | 4 | 18 | 19′-11 | 358′ |
| FOOTINGS | F11 | 6 | 88 | 9′-6 | 836′ |
| | F12 | 9 | 88 | 9′-6 | 836′ |
| COLUMNS | C21 | 8 | 40 | 23′-3 | 930′ |
| | C22 | 5 | 256 | 11′-3 | 2880′ |

DGN File:IP_PWPrdms1717\4433_C-342-25_RBSCH01.dgn
02-MAY-2005

# TEEL SCHEDULE

| AL | DIAGRAM |
|---|---|
| -0 | 18'6 |
| -0 | 19'-9 |
| -10 | 101° 1'-0 2'-8 |
| -10 | 7" 2'-7 |
| -0 | 2'-6 9" 1'-0 1'-8 |
| -0 | 21'-2 |
| -0 | 18'-6 |
| -0 | 3'-8 3'-8 |
| '-8 | 3'-2 |
| '-0 | 7" 79° 3'-3 |
| '-6 | 2'-6 2'-6 151'-11 |
| -6 | 18'-7 |
| -6 | 19'-11 |
| -0 | 9'-6 |
| -0 | 9'-6 |
| -0 | 21'-0 |
| -0 | 2'-8 2'-8 |

| | MARK | SIZE | NUM | LENGTH | TOTAL | DIAGRAM |
|---|---|---|---|---|---|---|
| COLUMNS | C23 | 5 | 1024 | 5'-3 | 5376'-0 | 2'-6 7" |
| | C24 | 5 | 24 | 3'-0 | 72'-0 | 2'-6 |
| | C25 | 8 | 40 | 26'-6 | 1060'-0 | 24'-3 |
| BENT CAPS | B20 | 5 | 12 | 8'-2 | 98'-0 | 2'-6 2'-6 3'-5 |
| | B21 | 8 | 40 | 9'-0 | 360'-0 | 9'-0 |
| | B22 | 5 | 12 | 7'-9 | 93'-0 | 3'-0 3'-0 2'-0 |
| | B23 | 11 | 40 | 21'-10 | 873'-4 | 18'-6 |
| | B24 | 9 | 40 | 19'-0 | 760'-0 | 169° 171° 6'-3 3'-9 9'-0 |
| | B25 | 5 | 24 | 18'-6 | 444'-0 | 18'-6 |
| | B26 | 5 | 16 | 13'-5 | 214'-8 | VARIES 10'-0 TO 16'-10 |
| | NO OF SETS | 8 | | | | |
| | BARS/ SET | 2 | | | | |
| | B27 | 5 | 112 | 10'-0 | 1120'-0 | VARIES 2'-2 TO 3'-8 3'-5 |
| | NO OF SETS | 14 | | | | |
| | BARS/ SET | 8 | | | | |

| NO. | DATE | BY | REMARKS |
|---|---|---|---|
| | | | |

REVISIONS

UTAH DEPARTMENT OF TRANSPORTATION
SALT LAKE CITY, UTAH
STRUCTURES DIVISION

DESIGN JW 11/04 CHECK PBB 11/04
DRAWN RDF 11/04 CHECK PBB 11/04
QUANT. PBB 11/04 CHECK JW 11/04

APPROVAL RECOMM. DATE SENIOR DESIGN ENGR.
APPROVED FOR USE BY UDOT DATE UDOT BRIDGE ENGR.

I-15; CORRIDOR IN UTAH COUNTY
LEHI 300 WEST OVERPASS
REINFORCING STEEL SCHEDULE 1

PROJECT NUMBER SP-15-6(52)241

UTAH
COUNTY

C-342W
DRG. NO.

SHT. 25 OF 26

# REINFORCING ST

| | MARK | SIZE | NUM | LENGTH | TOTAL | DIAGRAM |
|---|---|---|---|---|---|---|
| BENT CAPS | B28 | 5 | 336 | 4′-3 | 1428′-0 | 3′-5 |
| | B29 | 5 | 224 | 3′-9 | 840′-0 | VARIES 2′-2 TO 3′-8 |
| | NO OF SETS | 14 | | | | |
| | BARS/ SET | 16 | | | | |
| | B30 | 5 | 20 | 6′-1 | 121′-8 | 2′-0, 77°, 2′-0, 2′-2 |
| ABUTMENTS | A1 | 5 | 80 | 16′-6 | 1320′-0 | 16′-6 |
| | A2 | 5 | 32 | 7′-2 | 229′-4 | 6′-6 |
| | A3 | 5 | 64 | 6′-7 | 421′-4 | 1′-6, 1′-6, 3′-10 |
| | A4 | 5 | 64 | 8′-7 | 549′-4 | 4′-0, 4′-0, 10″ |
| | A5 | 5 | 64 | 3′-11 | 250′-8 | 2′-0, 2′-0 |
| | A6 | 5 | 5 | 4′-10 | 24′-2 | 4′-10 |
| | A7 | 5 | 8 | 3′-11 | 31′-4 | 2′-0, 2′-0 |
| | A8 | 5 | 72 | 5′-1 | 366′-0 | 3′-10 |
| | A9 | 5 | 32 | 9′-2 | 293′-4 | 8′-6 |
| | A10 | 5 | 32 | 6′-2 | 197′-4 | 5′-6 |
| | A11 | 5 | 32 | 7′-11 | 253′-4 | 7′-3 |
| | A12 | 5 | 5 | 6′-7 | 32′-11 | 6′-7 |
| | A13 | 5 | 5 | 3′-8 | 18′-4 | 3′-8 |
| | A14 | 5 | 5 | 5′-5 | 27′-1 | 5′-5 |
| | A15 | 5 | 72 | 3′-0 | 216′-0 | 3′-0 |

| | MARK | SIZE | NUM | LENGTH | TOTA |
|---|---|---|---|---|---|
| ABUTMENTS | F1 | 6 | 120 | 9′-0 | 1080 |
| | F2 | 6 | 16 | 15′-7 | 249′ |
| | NO OF SETS | 4 | | | |
| | BARS/ SET | 4 | | | |
| | F3 | 6 | 48 | 14′-4 | 688′ |
| | F4 | 6 | 12 | 5′-3 | 63′ |
| CATCH BASINS | CB1 | 5 | 12 | 8′-4 | 100′ |
| | CB2 | 5 | 8 | 2′-6 | 20′ |
| | CB3 | 5 | 4 | 2′-6 | 10′ |

DGN File:IP_PWPcdms1717\4433_C-342-26_RBSCH02.dgn
02-MAY-2005

TEEL SCHEDULE

| AL | DIAGRAM |
|---|---|
| '-0 | 9'-0 |
| -4 | VARIES 14'-4 TO 16'-10 |
| -0 | 14'-4 |
| -0 | 5'-3 |
| -0 | 7" 7" 2'-7 2'-6 |
| -0 | 2'-6 |
| -0 | 2'-6 |

| | MARK | SIZE | NUM | LENGTH | TOTAL | DIAGRAM |
|---|---|---|---|---|---|---|
| | | | | | | |

## SUMMARY

#4 @ 0.668 LBS/FT = 4498 LBS
#5 @ 1.043 LBS/FT = 55,231 LBS
#6 @ 1.502 LBS/FT = 4878 LBS
#7 @ 2.044 LBS/FT = 5027 LBS
#8 @ 2.670 LBS/FT = 6274 LBS
#9 @ 3.400 LBS/FT = 5425 LBS
#11 @ 5.313 LBS/FT = 4634 LBS

TOTAL = 85,967 LBS

## NOTES

1. ALL DIMENSIONS ARE OUT TO OUT BAR UNLESS NOTED OTHERWISE.
2. ALL ANGLES ARE 90° UNLESS NOTED OTHERWISE.
3. ALL BARS ARE COATED.
4. SPLICES MAY BE OMITTED AT FABRICATOR'S OPTION. FABRICATOR ASSUMES RESPONSIBILITY FOR FIT. SPLICES ARE BASED ON 40 FT BAR LENGTHS.
5. ALL REINFORCING STEEL IS INCLUDED IN THE PAY ITEM REINFORCING STEEL-COATED.

| NO. | DATE | BY | REMARKS |
|---|---|---|---|
| | | | |

REVISIONS

UTAH DEPARTMENT OF TRANSPORTATION
SALT LAKE CITY, UTAH
STRUCTURES DIVISION

DESIGN RDF 11/04 CHECK PBB 11/04
DRAWN RDF 11/04 CHECK PBB 11/04
QUANT. PBB 11/04 CHECK JW 11/04

APPROVAL RECOMM. DATE SENIOR DESIGN ENGR.
APPROVED FOR USE BY UDOT DATE UDOT BRIDGE ENGR.

I-15; CORRIDOR IN UTAH COUNTY
LEHI 300 WEST OVERPASS
REINFORCING STEEL SCHEDULE 2

PROJECT NUMBER SP-15-6(52)241

UTAH
COUNTY

C-342W
DRG. NO.

SHT. 26 OF 26

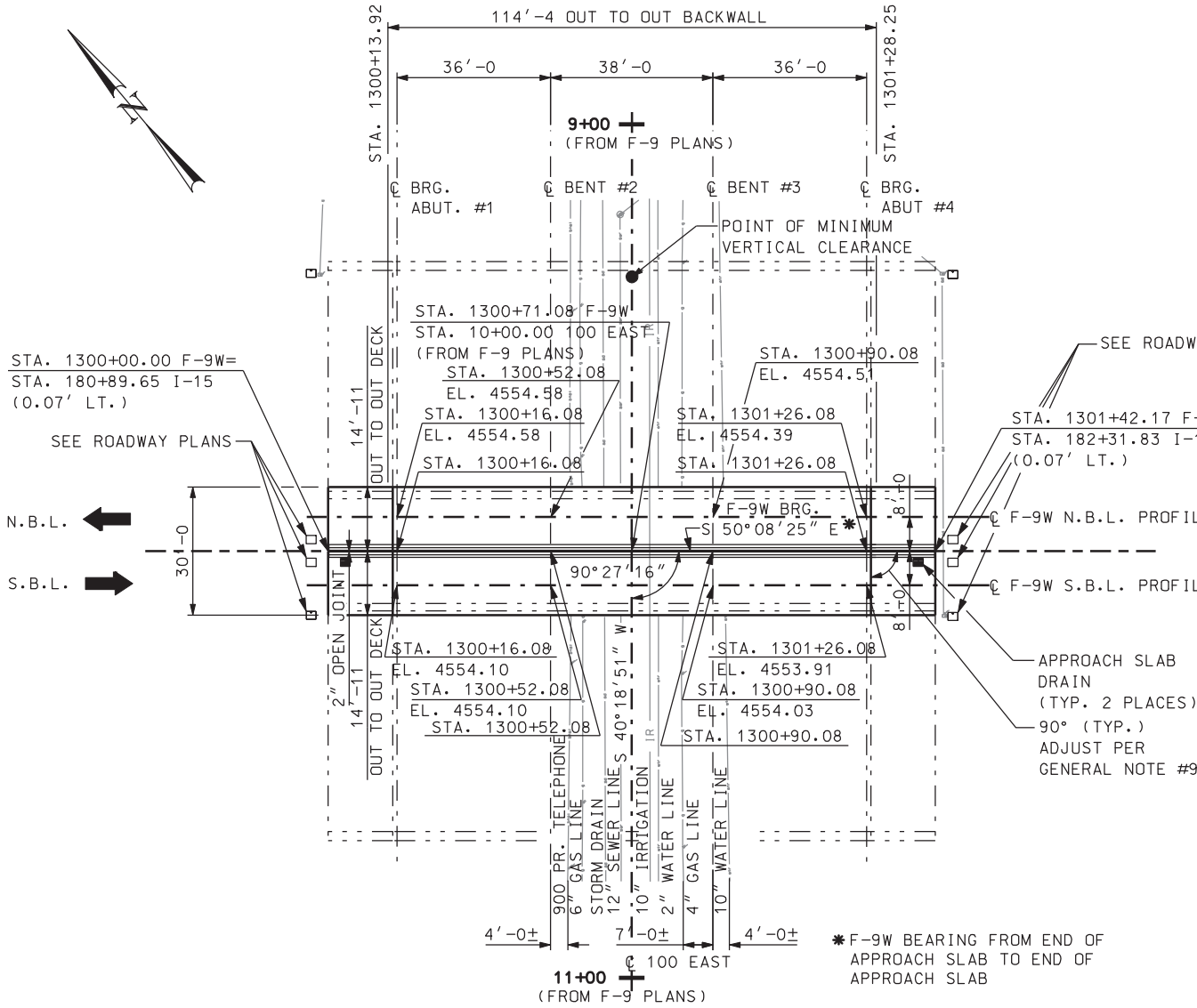


## PLAN

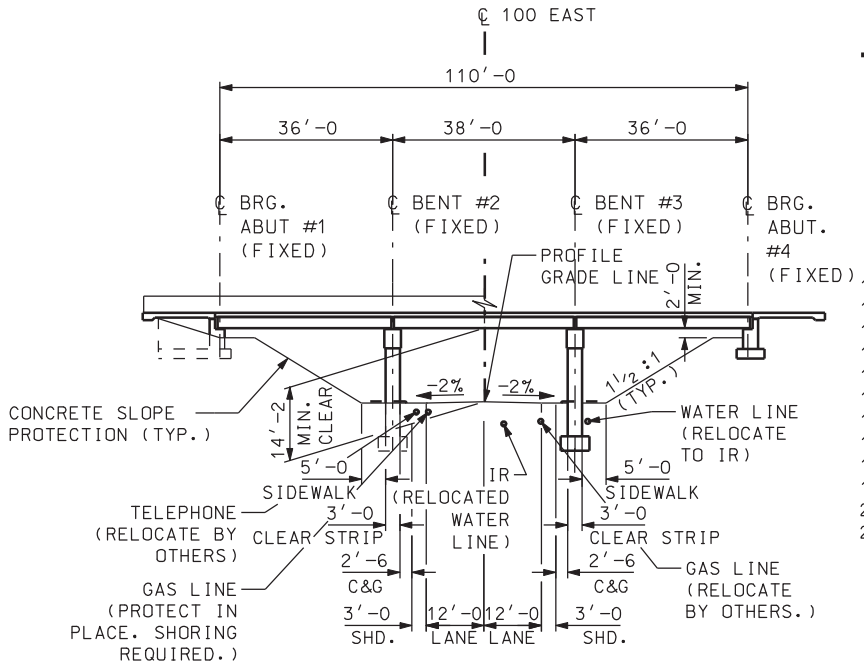


## ELEVATION

## INDEX OF SHEETS


1. SITUATION AND LAYO
2. SITUATION AND LAYO
3. SOIL DATA SHEET
4. FOUNDATION PLAN
5. ABUTMENT #1 DETAIL
6. ABUTMENT #4 DETAIL
7. BENT PLAN AND ELEV
8. BENT DETAILS 1
9. BENT DETAILS 2
10. FRAMING PLAN
11. BEAM DETAILS; SPAN
12. BEAM DETAILS; SPAN
13. DECK PLAN AND SECT
14. DECK & APPROACH SL
15. EXISTING DIAPHRAGM
16. SCREED ELEVATIONS
17. PARAPET DETAILS
18. PARAPET END DETAIL
19. APPROACH SLAB DRAI
20. CONCRETE SLOPE PRO
21. REINFORCING STEEL



DGN File: N:\Projects\4433.04\Sheet.Files\Structures\F-9W\4433.f-9w-01.shtl.dgn
05-MAY-2005

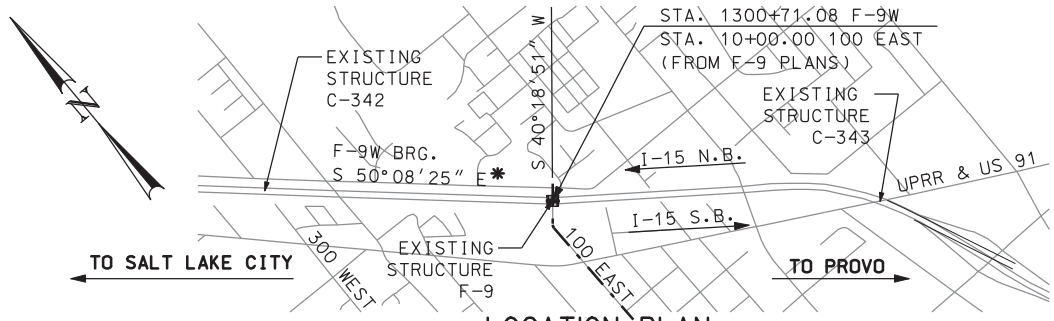


✱ F-9W BEARING FROM END OF APPROACH SLAB TO END OF APPROACH SLAB

## LOCATION PLAN

## GENERAL NOTES

1. USE COATED DEFORMED-BILLET REINFORCING STEEL BARS CONFORMING TO AASHTO M 284 OR M111 AND M 31 GRADE 60 RESPECTIVELY.
2. USE STRUCTURAL STEEL CONFORMING TO AASHTO M 270 GRADE 36 EXCEPT WHERE NOTED OTHERWISE.
3. CHAMFER ALL EXPOSED CONCRETE CORNERS ¾" EXCEPT WHERE NOTED OTHERWISE.
4. PROVIDE 2" CONCRETE COVER TO REINFORCING STEEL EXCEPT WHERE NOTED OTHERWISE
5. USE CLASS AA(AE) CAST-IN-PLACE CONCRETE EXCEPT WHERE SPECIFIED OTHERWISE.
6. ALL DECK, APPROACH SLAB AND PROFILE GRADE ELEVATIONS ARE AT TOP OF CONCRETE.
7. LINE F-9W IS OBTAINED BY CREATING A LINE CONNECTING TWO POINTS EACH LOCATED ALONG THE CENTERLINE BEARING ABUTMENT #1 AND #4 RESPECTIVELY THAT ARE EQUIDISTANT FROM THE CENTERLINE OF THE SBL AND NBL INTERIOR MOST EXISTING BEAMS.
8. CONTRACTOR WILL VERIFY RELATIVE ELEVATION DIFFERENCES BETWEEN F-9 AND F-9W AT BOTTOM OF NBL AND SBL INTERIOR MOST EXISTING BEAMS AT FRONT FACE OF ABUTMENT #1, SEE "ABUTMENT DETAILS" SHEET. IF THE RELATIVE ELEVATION DIFFERENCES VARY BY MORE THAN ± 1", CONTRACTOR WILL ADJUST ALL PLAN ELEVATIONS ACCORDINGLY AND SUBMIT TO THE ENGINEER FOR APPROVAL BEFORE MAKING ANY ADJUSTMENTS IN THE FIELD.
9. ALL NEW SUBSTRUCTURE ELEMENTS ARE DESIGNED TO MATCH LOCATION AND DIRECTION OF EXISTING ELEMENTS. FIELD VERIFY ALL CONTROLLING DIMENSIONS PRIOR TO CONSTRUCTION AND FABRICATION OF ANY MATERIALS. REPORT ANY DISCREPANCY BETWEEN THESE PLANS AND THE EXISTING STRUCTURE TO THE ENGINEER. DO NOT CONSTRUCT OR FABRICATE ANY ELEMENTS UNTIL THE DISCREPANCIES ARE RESOLVED. ALL STRUCTURE GEOMETRY IS BASED ON LOCAL SURVEY CONTROL POINTS SHOWN ON THE FOUNDATION PLAN. THE I-15 STATIONING AND ALIGNMENT IS FOR INFORMATION ONLY.
10. UTILITIES DESIGNATED AS "RELOCATE" ARE THE DESIGN-BUILD RESPONSIBILITY OF THE CONTRACTOR. REFER TO UTILITY RELOCATION (DESIGN-BUILD) SPECIFICATION 000728S.
11. SEE UT-5 FOR FURTHER INFORMATION.

## DESIGN DATA

HL-93 IN ACCORDANCE WITH CURRENT AASHTO LRFD BRIDGE DESIGN SPECIFICATIONS AND INTERIM SPECIFICATIONS.

SEISMIC DESIGN PER NCHRP 12-49.

INVENTORY AND OPERATING RATINGS FOR HS20-44 ARE IN ACCORDANCE WITH THE AASHTO MANUAL FOR CONDITION ELEVATION OF BRIDGES, 2nd EDITION, AND THE 2001 AND 2003 INTERIM SPECIFICATIONS LOAD FACTOR METHOD. INVENTORY AND OPERATING RATINGS FOR HL-93 ARE IN ACCORDANCE WITH THE GUIDE MANUAL FOR CONDITION EVALUATION AND LOAD RESISTANCE FACTOR RATING (LRFR) OF HIGHWAY BRIDGES.

| | | OPERATING RATING | INVENTORY RATING |
|---|---|---|---|
| EXISTING BEAMS:✱ | (HS-20) | 2.90 (MOMENT - SPAN 2) | 1.53 (TENSILE STRESS - SPAN 2) |
| | (HL-93) | 1.80 (MOMENT - SPAN 2) | 1.24 (TENSILE STRESS - SPAN 2) |
| NEW BEAMS: | (HL-93) | 1.38 (MOMENT - SPANS 1 & 3) | 1.06 (MOMENT - SPANS 1 & 3) |

✱ EXISTING BEAMS ARE RATED AS SIMPLE SPANS.

| | |
|---|---|
| CAST-IN-PLACE CONCRETE: CLASS AA (AE) | $f'c$ = 4000 PSI; $f$y (REINF.) = 60,000 PSI; $n$ = 8 |
| PRESTRESSED CONCRETE: | $f'c$ = 5000 PSI; $f$y (NON-PRESTRESSED) = 60,000 PSI; $n$ = 7 |
| STRUCTURAL STEEL: | $f$y = 36,000 PSI |
| WEARING SURFACE: | ½" CONCRETE; 3" ASPHALT; FUTURE = 0 PSF |
| DESIGN SPEED: | 70 M.P.H |
| SEISMIC: | SEISMIC DESIGN PARAMETERS (500 YR. RETURN PERIOD, 10% PE IN 50 YR.)<br>Ss = MAX. CONSIDERED EQ GROUND MOTION AT 0.2s = 0.48g<br>S1 = MAX. CONSIDERED EQ GROUND MOTION AT 1.0s = 0.16g<br>SITE CLASS D |

## QUANTITIES

| ITEM | ESTIM. | UNIT | AS CONST. |
|---|---|---|---|
| GRANULAR BACKFILL BORROW (PLAN QUANTITY) | 282 | CU.YD. | |
| REINFORCING STEEL - COATED | 79,733 | LBS. | |
| PREPARE BRIDGE FOR WIDENING | 1 | LUMP | |
| STRUCTURAL CONCRETE (EST. LUMP QTY: 394 CU. YD.) | 1 | LUMP | |
| REPLACE CONCRETE SLOPE PROTECTION | 300 | SQ. YD. | |
| PRESTRESSED CONCRETE MEMBER (37'-6 TYPE I SPECIALTY ITEM) | 4 | EACH | |
| PRESTRESSED CONCRETE MEMBER (36'-3 TYPE I SPECIALTY ITEM) | 8 | EACH | |
| STRUCTURAL STEEL (EST. LUMP QTY: 546 LB.) | 1 | LUMP | |

REVISIONS

| NO. | DATE | BY | REMARKS |
|---|---|---|---|

UTAH DEPARTMENT OF TRANSPORTATION
SALT LAKE CITY, UTAH
STRUCTURES DIVISION

DESIGN MDR 12/04 CHECK GG 12/04
DRAWN LM 12/04 CHECK MDR 12/04
QUANT. MDR 12/04 CHECK LM 12/04

APPROVAL RECOMM. DATE SENIOR DESIGN ENGR.
APPROVED FOR USE BY UDOT DATE UDOT BRIDGE ENGR.

I-15; CORRIDOR IN UTAH COUNTY
100 EAST OVERPASS IN LEHI
SITUATION AND LAYOUT I

PROJECT NUMBER SP-15-6(52)241

UTAH
COUNTY

F-9W
DRG. NO.

SHT. 1 OF 21

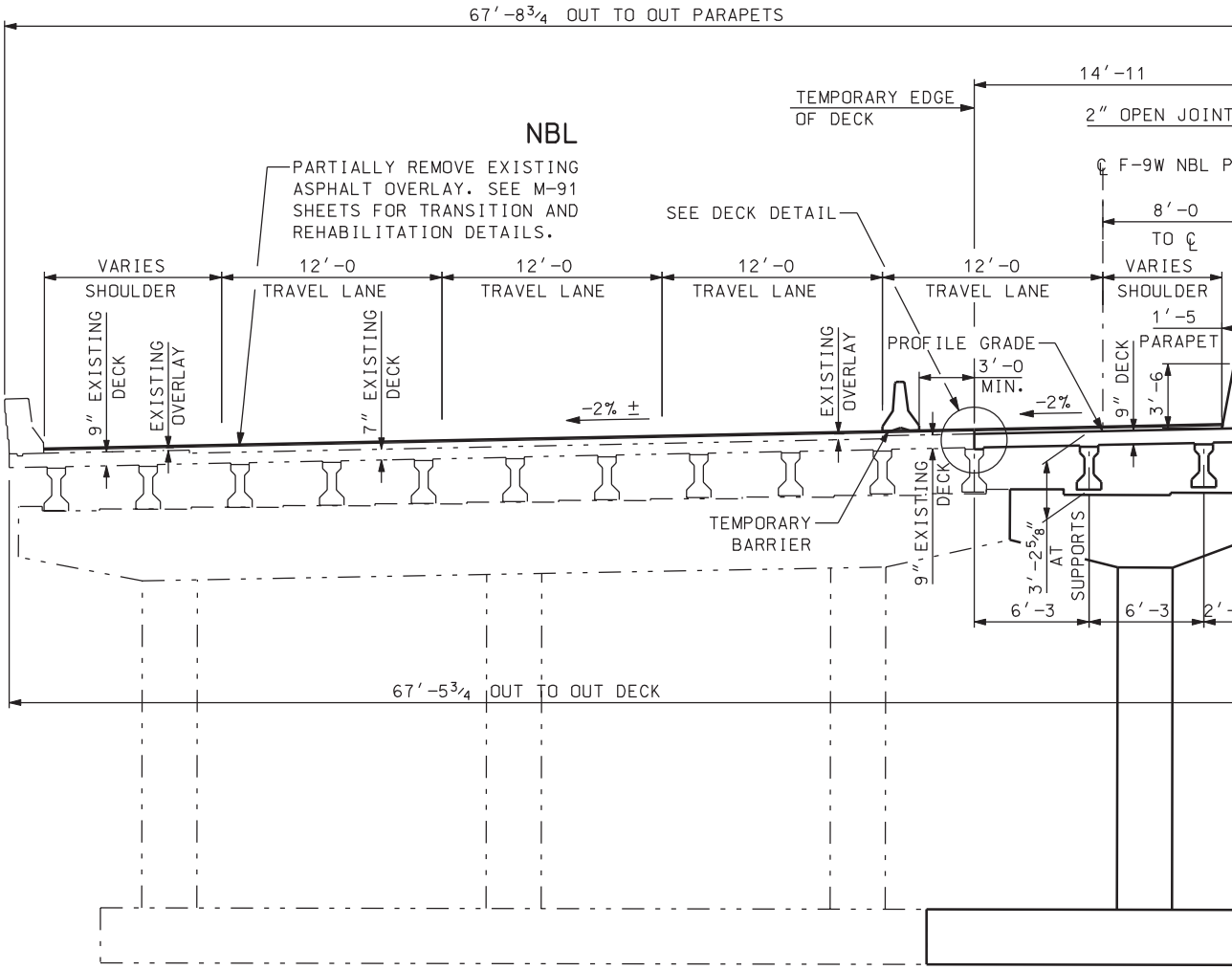


TYPICAL SECTION

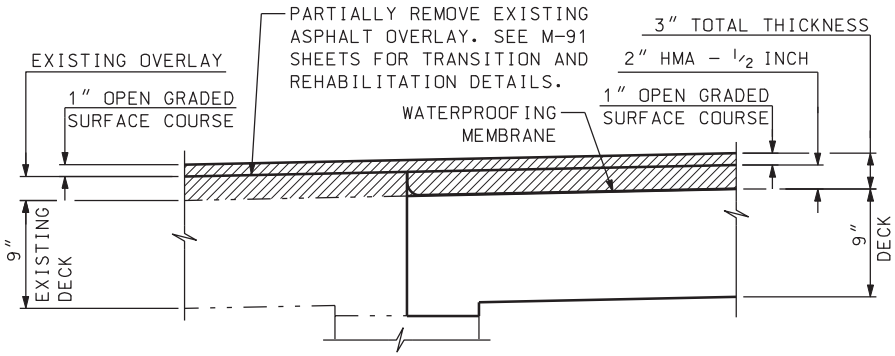


DECK DETAIL

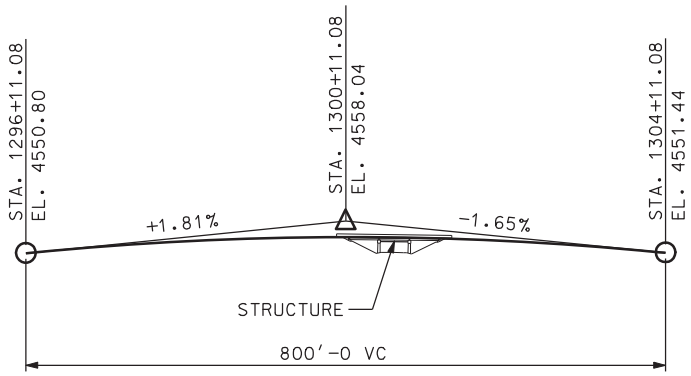


F-9W N.B.L. PROFILE

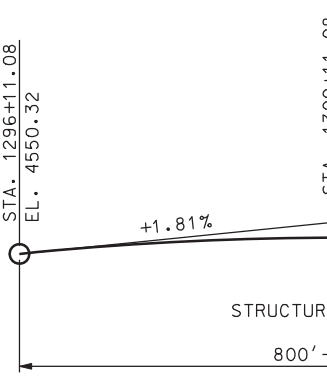


F-9W S.B

DGN File: N:\Projects\4433.04\Sheet.Files\Structures\F-9W\4433.f-9w-02.sht2.dgn

05-MAY-2005

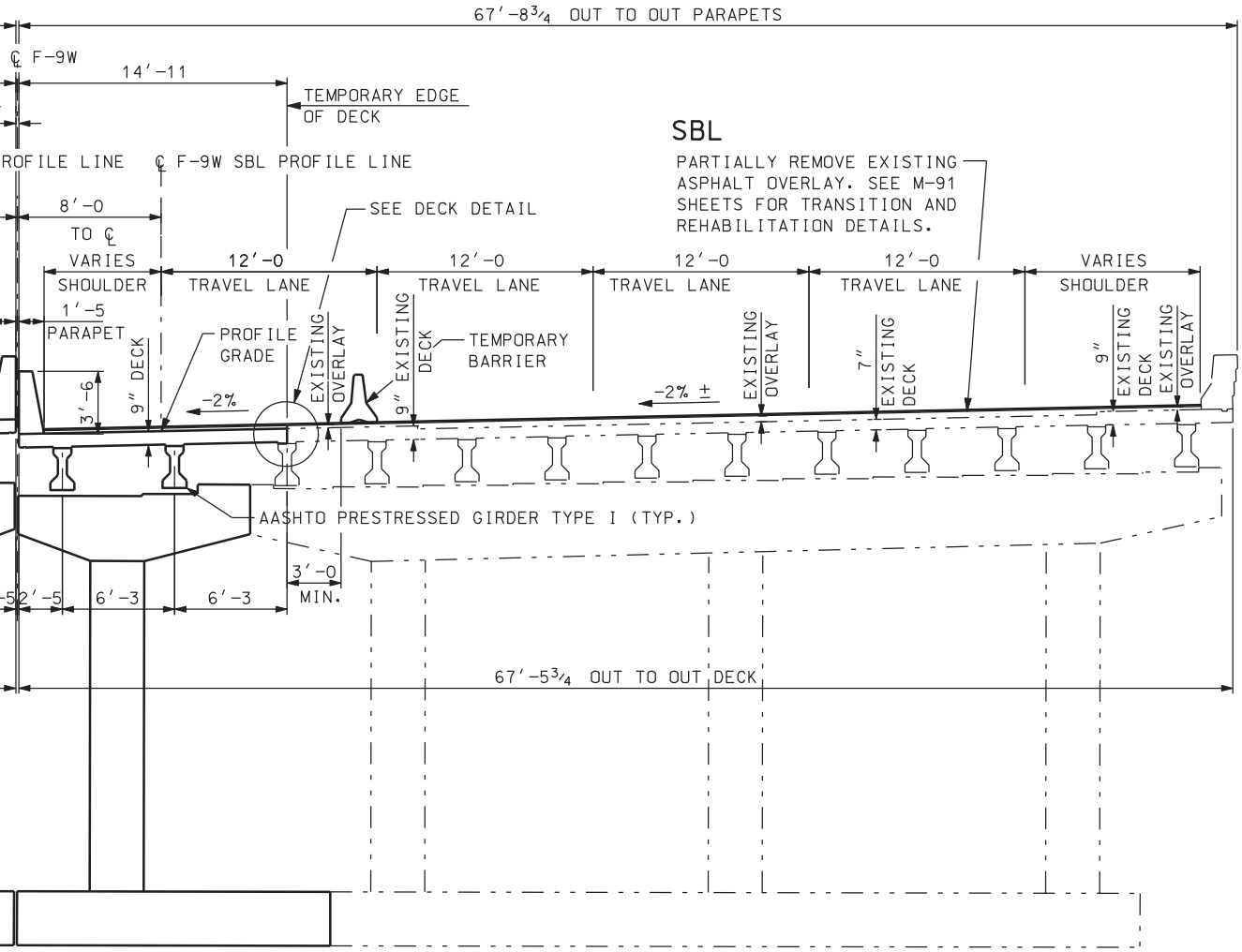


N THRU STRUCTURE

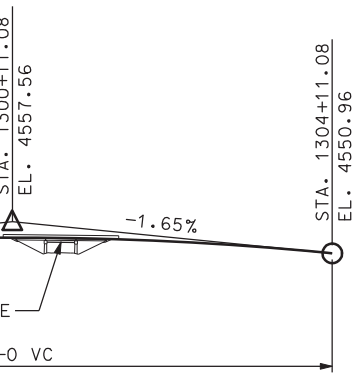


B.L. PROFILE

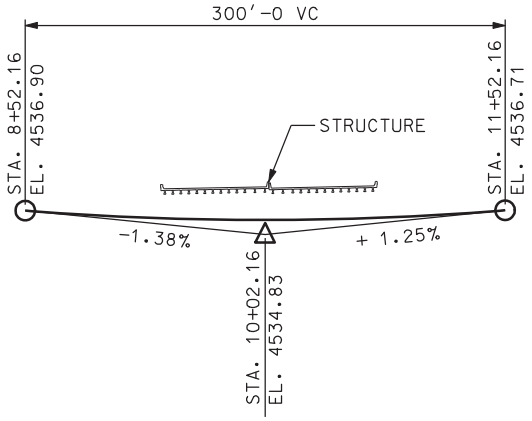


100 EAST PROFILE

## NOTES:

1. ALL DECK, APPROACH SLAB AND PROFILE GRADE ELEVATIONS ARE AT TOP OF CONCRETE.
2. FOR LOCATION OF TRAVEL LANES, SEE ROADWAY PLANS.
3. SEE REHABILITATION PLANS FOR FURTHER INFORMATION.
4. SEE SPECIAL PROVISION "PREPARE BRIDGE FOR WIDENING" FORE FURTHER INSTRUCTIONS.

| NO. | DATE | BY | REMARKS |
|---|---|---|---|

REVISIONS

UTAH DEPARTMENT OF TRANSPORTATION
SALT LAKE CITY, UTAH
STRUCTURES DIVISION

DESIGN MDR 12/04 CHECK GG 12/04
DRAWN LM 12/04 CHECK MDR 12/04
QUANT. CHECK

APPROVAL RECOMM. DATE SENIOR DESIGN ENGR.
APPROVED FOR USE BY UDOT DATE UDOT BRIDGE ENGR.

I-15: CORRIDOR IN UTAH COUNTY
100 EAST OVERPASS IN LEHI
SITUATION AND LAYOUT II

PROJECT NUMBER SP-15-6(52)241

UTAH
COUNTY

F-9W
DRG. NO.

SHT. 2 OF 21

# DRILL HOLE LOG

## BORING NO. 04-1

Sheet: 1 of 1

PROJECT: I-15, CORRIDOR IN UTAH COUNTY - STRUCTURE F9 — PROJECT NO.: 200401.045
CLIENT: UTAH DEPARTMENT OF TRANSPORTATION — DATE: 8/12/04
LOCATION: SEE SITE PLAN: N 118356, E 178394 — ELEVATION: 4535.4'
DRILLER: B. HARTLEY, A. HARTVIGSEN — LOGGED BY: M.C., V.N.B.
EQUIP./DRILL METHOD: CME-55 / N.W. CASING
DEPTH TO WATER - INITIAL: ▽ 10.8' AFTER 24 HOURS: ▽ 10.6' 8/27/04

| Elev. (Feet) | Depth (Feet) | Lithology | Sample Type | Rec. (In.) | Blows Per 6" & Torvane (tsf) | USCS (AASHTO) | Material Description | Dry Density, pcf | Moisture Content, % | Atter. Liquid Limit, % | Atter. Plasticity Index, % | Gradation Gravel, % | Gradation Sand, % | Gradation Silt/Clay, % | Other Tests |
|---|---|---|---|---|---|---|---|---|---|---|---|---|---|---|---|
| 4535 | | | | | | | ASPHALT | | | | | | | | |
| | | | | 11 | 3,4,6 | SM | brown, very moist, loose | | | | | | | | |
| | | | | 12 | 3,3,3 | SM (A-3) | brown, moist, loose — SILTY SAND W/GRAVEL (fill) | | 9.4 | | NP | 14 | 64 | 22 | |
| 4530 | 5 | | | | | | loose | | | | | | | | |
| | | | | 13 | 5,9,12 | SP | lt. gray, moist, med. dense, coarse to med. grained, some fine — POORLY GRADED SAND | | | | | | | | |
| | | | | 16 | 6,11,9 | SP (A-1-b) | lt. brown, moist, med. dense, med. to coarse grained | | 3.8 | | NP | 8 | 88 | 4 | |
| 4525 | 10 | | | | | SM | gray-brown, wet, med. dense | | | | | | | | |
| | | | | 13 | 8,9,11 | SM (A-3) | gray-brown, wet, med. dense — SILTY SAND | | 22.8 | | NP | 0 | 87 | 13 | DS |
| 4520 | 15 | | | 13 | 10,12,12 | SP-SM (A-3) | gray, wet, med. dense — POORLY GRADED SAND W/SILT | | 22.9 | | NP | 0 | 89 | 11 | |
| 4515 | 20 | | | 13 | 6,7,8 | ML (A-4(3)) | brown & gray, wet, med. dense — SANDY SILT W/SILTY SAND LAYERS & SAND LAYERS 0.5" THICK EVERY 2" TO 3" clay & silt layers ~1" thick every 6" to 12" | | 27.5 | | NP | 0 | 48 | 52 | |
| 4510 | 25 | | | 17 | Pushed 0.24 0.26 | ML (A-6(8)) | dk. gray, wet, soft — SILT | 80.4 | 41.4 | 37 | 12 | 0 | 1 | 99 | CT UC |
| 4505 | 30 | | | 16 | 17,20,11 | SP-SM | brown, wet, dense — POORLY GRADED SAND W/SILT some gravel | | | | | | | | |

# DRILL HOLE LOG

## BORING NO. 04-3

Sheet: 1 of 1

PROJECT: I-15, CORRIDOR IN UTAH COUNTY - STRUCTURE F9 — PROJECT NO.: 200401.045
CLIENT: UTAH DEPARTMENT OF TRANSPORTATION — DATE: 8/23/04
LOCATION: SEE SITE PLAN: N 118315, E 178430 — ELEVATION: 4554.3'
DRILLER: D. SAMPSON, W. SORENSON — LOGGED BY: R.J., V.N.B.
EQUIP./DRILL METHOD: CME-55 / N.W. CASING
DEPTH TO WATER - INITIAL: ▽ DRY AFTER 24 HOURS: ▽ NOT MEASURED

| Elev. (Feet) | Depth (Feet) | Lithology | Sample Type | Rec. (In.) | Blows Per 6" & Torvane (tsf) | USCS (AASHTO) | Material Description | Dry Density, pcf | Moisture Content, % | Atter. Liquid Limit, % | Atter. Plasticity Index, % | Gradation Gravel, % | Gradation Sand, % | Gradation Silt/Clay, % | Other Tests |
|---|---|---|---|---|---|---|---|---|---|---|---|---|---|---|---|
| | | | | | | | 11" ASPHALT | | | | | | | | |
| | | | | 12 | 22,17,18 | SM | brown, moist, med. dense — SILTY SAND W/SOME GRAVEL | | | | | | | | |
| 4550 | 5 | | | 13 | 22,10,11 0.87 | SM (A-2-4) | brown, moist, med. dense, 1" clayey silt layer — SILTY SAND W/GRAVEL | | 10.4 | | NP | 17 | 57 | 26 | |
| 4545 | 10 | | | 13 | 8,14,16 0.77 | SM | brown, moist, med. dense, 1" clayey silt layer | | | | | | | | |
| | | | | 7 | 50,50/4" | SM | brown, moist, very dense, some gravel — SILTY SAND (fill) | | | | | | | | |
| 4540 | 15 | | | 9 | 39,57 | SM (A-4) | brown, moist, very dense | | 13.7 | | NP | 9 | 54 | 37 | |
| 4535 | 20 | | | 10 | 36,37,50/4" | SM | gray-brown, moist, very dense — SILTY SAND | | | | | | | | |
| | | | | 12 | Pushed | SM | | | | | | | | | |
| 4530 | 25 | | | 9 | 10,22,18 | SM (A-1-b) | brown, moist, dense — SILTY SAND W/SILTY CLAY LAYERS TO 2" THICK | | 15.7 | | NP | 4 | 79 | 17 | |
| | | | | 8 | 13,23,18 | SP-SM | gray-brown, moist, dense — POORLY GRADED SAND W/SILT | | | | | | | | |

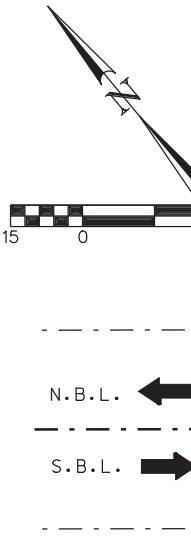


DGN File: N:\Projects\4433.04\Sheet.Files\Structures\F-9W\4433.f-9w-03.soildata.dgn
05-MAY-2005

# LOG

04–2

PROJECT: I-15, CORRIDOR IN UTAH COUNTY - STRUCTURE F9 — PROJECT NO.: 200401.045
CLIENT: UTAH DEPARTMENT OF TRANSPORTATION — DATE: 8/12/04
LOCATION: SEE SITE PLAN: N 118398, E 178378 — ELEVATION: 4535.7'
DRILLER: B. HARTLEY, A. HARTVIGSEN — LOGGED BY: M.C., V.N.B.
EQUIP./DRILL METHOD: CME-55 / N.W. CASING
DEPTH TO WATER - INITIAL: ▽ 10.4' AFTER 24 HOURS: ▽ 11.0' 8/27/04

| SAMPLE Type | Rec. (in.) | Blows Per 6" & Torvane (tsf) | USCS (AASHTO) | Material Description | | Dry Density, pcf | Moisture Content, % | Atter. Liquid Limit, % | Atter. Plasticity Index, % | Gradation Gravel, % | Gradation Sand, % | Gradation Silt/Clay, % | Other Tests |
|---|---|---|---|---|---|---|---|---|---|---|---|---|---|
| | 14 | 5,7,6 | SM | brown, slightly moist, med. dense | | | | | | | | | |
| | 15 | 3,3,2 | SM | brown, slightly moist, very loose | SILTY SAND | | | | | | | | |
| | 15 | 2,3,2 | SM (A-1-b) | brown, moist, very loose | | | 6.5 | | NP | 9 | 78 | 13 | |
| | | | SP | lt. brown, moist, med. dense | POORLY GRADED SAND | | | | | | | | |
| | 16 | 4,7,10 | SM | gray-brown, wet, med. dense | SILTY SAND | | | | | | | | |
| | 11 | 7,10,11 | SP (A-3) | lt. brown, wet, med. dense; lt. brown, wet, med. dense | POORLY GRADED SAND | | 24.5 | | | 3 | 96 | 1 | |
| | 12 | 8,10,6 0.23 | SM | lt. brown, wet, med. dense | SILTY SAND | | | | | | | | |
| | | | ML (A-4(8)) | lt. brown, wet | SILT | | 28.9 | | NP | 0 | 15 | 85 | |
| | 15 | Pushed 0.50 | CL (A-7-5(14)) | brown, wet, stiff | LEAN CLAY | 99.3 | 27.1 | 46 | 22 | 0 | 2 | 98 | CT UC |
| | 18 | 6,15,18 | SP-SM | brown, wet, dense | POORLY GRADED SAND W/SILT | | | | | | | | |
| | 11 | 10,14,15 | SM | gray, wet, med. dense | SILTY SAND | | | | | | | | |
| | 13 | 8,8,4 | SM (A-3) | gray, wet, med. dense | | | 17.7 | | NP | 1 | 82 | 17 | |

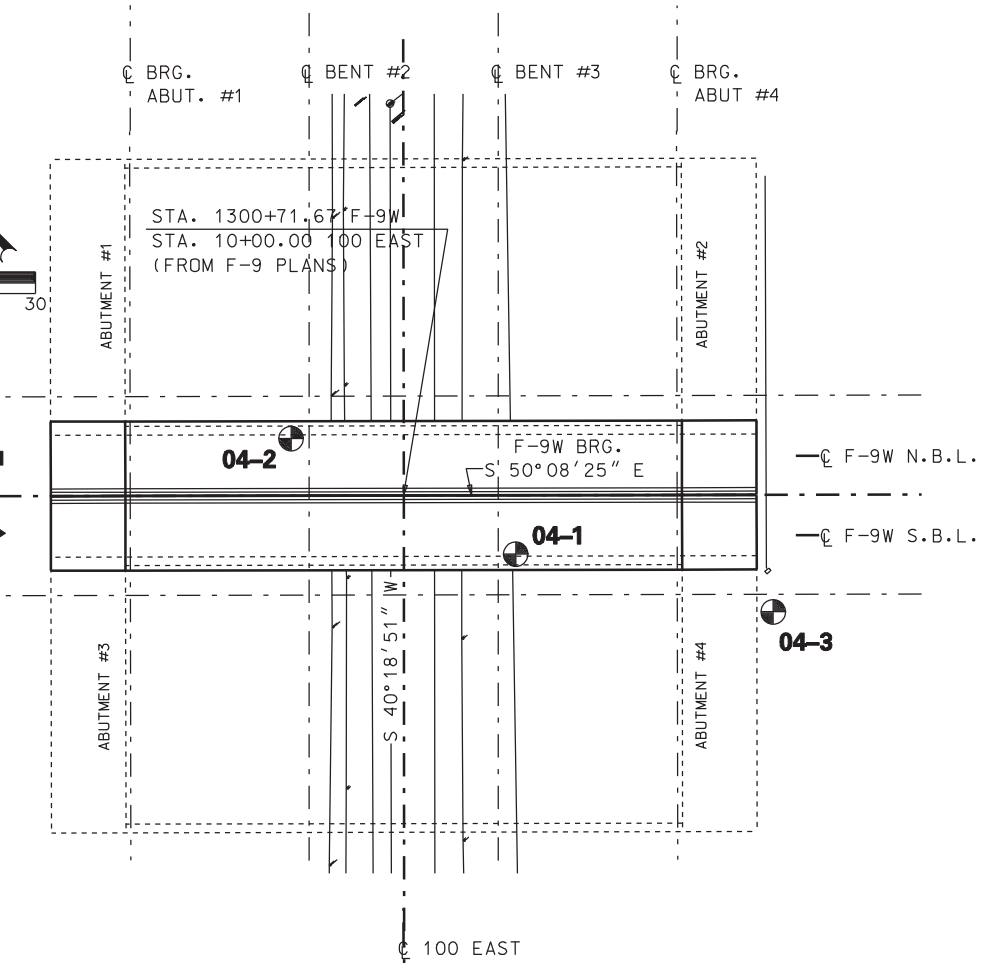


## LOCATION PLAN

# KEY TO BORING LOG

## SYMBOLS

2,3,2 — Blow Count per 6"
0.45 — Torvane (tsf)
Disturbed Sample
Undisturbed Sample
Groundwater Elevation

UC = Unconfined Compression Test
CT = Consolidation Test
SG = Specific Gravity Test
DS = Direct Shear Test

## RELATIVE DENSITY (NON-PLASTIC - SAND & SILT)

VERY LOOSE N<4
LOOSE N 4-10
MED DENSE N 10-30
DENSE N 30-50
VERY DENSE N>50

## CONSISTENCY (PLASTIC - SILT & CLAY)

VERY SOFT N<2
SOFT N 2-4
MEDIUM STIFF N 4-8
STIFF N 8-15
VERY STIFF N 15-30
HARD N>30

## GENERAL NOTES

1. THE SUBSURFACE EXPLORATIONS SHOWN WERE CONDUCTED BETWEEN 08-12-04 AND 08-23-04 BY RB&G ENGINEERING, INC..
2. THESE BORING LOGS REPRESENT A SYNOPSIS OF THE SOIL DEPOSITS ENCOUNTERED WITHIN EACH BORING AND ARE BASED ON SOUND GEOLOGICAL AND ENGINEERING JUDGMENT. BECAUSE SOIL IS A COMPLEX MEDIUM, THESE BORING LOGS MAY OR MAY NOT REPRESENT THE SOIL CONDITIONS AT THIS SITE. THIS SUBSURFACE INTERPRETATION IS PRESENTED IN GOOD FAITH AND IS NOT INTENDED AS A SUBSTITUTE FOR PERSONAL INVESTIGATION AND JUDGEMENT OF THE CONTRACTOR.
3. THE WATER LEVELS AND CONDITIONS INDICATED ON THE BORING LOGS REPRESENT HOLE CONDITIONS ON THE DATE SHOWN, HOWEVER, IT SHOULD BE NOTED, THAT AT LOCATIONS AWAY FROM THE BORINGS OR AT ANOTHER TIME THE WATER LEVELS AND CONDITIONS MAY VARY SIGNIFICANTLY.
4. THE STRATIFICATION LINES REPRESENT THE APPROXIMATE BOUNDARIES BETWEEN SOIL TYPES AND THE TRANSITION MAY BE GRADUAL.
5. COBBLE - A ROCK WITH AN AVERAGE DIMENSION BETWEEN 3 INCHES AND 12 INCHES
6. BOULDER - A ROCK WITH AN AVERAGE DIMENSION OF 12 INCHES OR GREATER

NOTE: DRILL RIG USED - CME 55 HAMMER E=0.75

GEOTECHNICAL ENGINEER

| NO. | DATE | BY | REMARKS |
|---|---|---|---|
| | | | |

REVISIONS

UTAH DEPARTMENT OF TRANSPORTATION
SALT LAKE CITY, UTAH
STRUCTURES DIVISION
RB&G ENGINEERING INC.

DESIGN BEP 10/04 CHECK
DRAWN JPN 10/04 CHECK
QUANT. CHECK

APPROVAL RECOMM. DATE SENIOR DESIGN ENGR.
APPROVED FOR USE BY UDOT DATE UDOT BRIDGE ENGR.

I-15: CORRIDOR IN UTAH COUNTY
100 EAST OVERPASS IN LEHI
SOIL DATA SHEET
PROJECT NUMBER SP-15-6(52)241

UTAH
COUNTY

F-9W
DRG. NO.

SHT. 3 OF 21

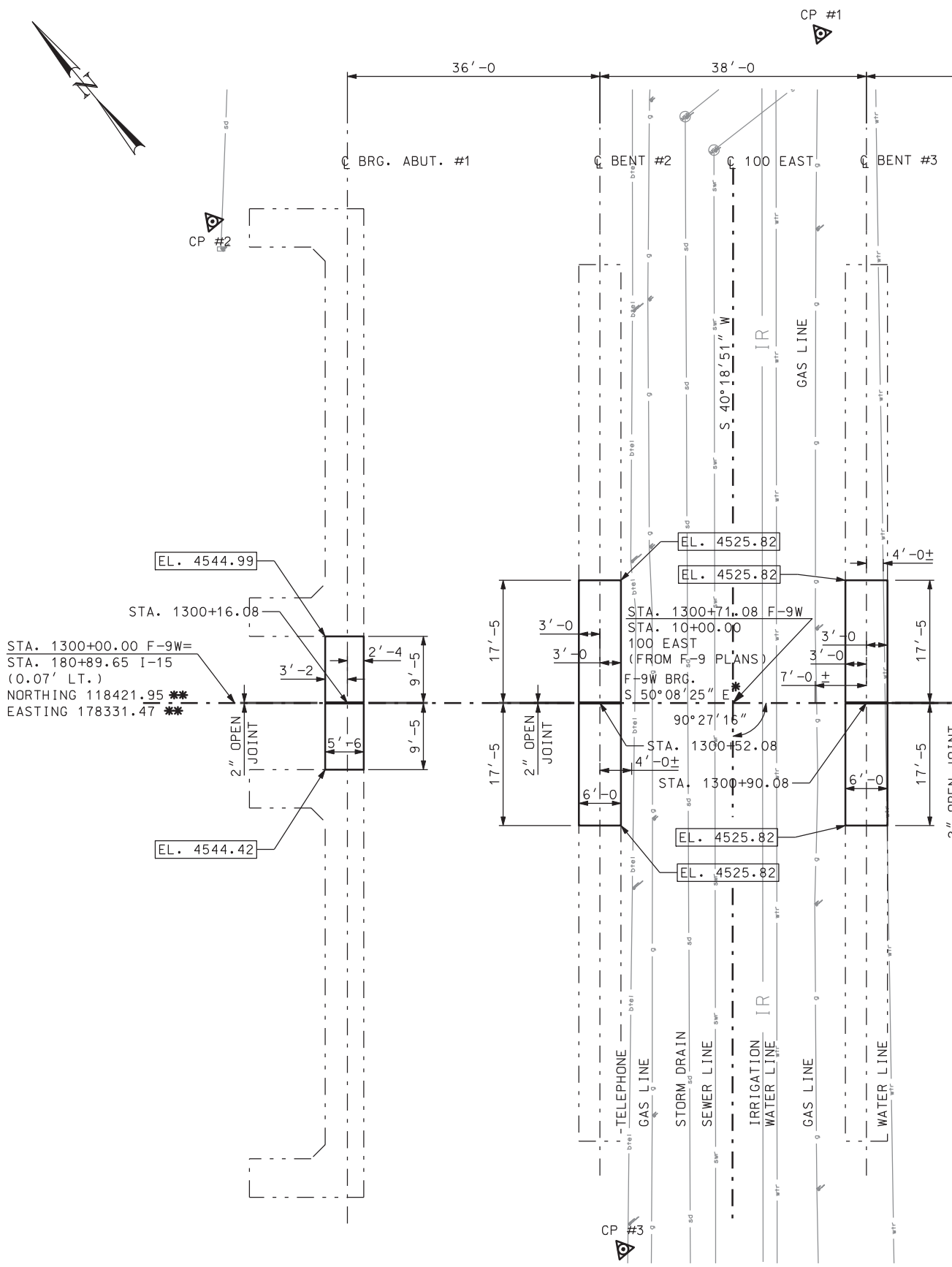


** NORTHING AND EASTING ARE GIVEN ONLY FOR VERIFICATION OF LINE F-9W. THEY ARE NOT INTENDED TO BE USED TO LOCATE LINE F-9W. SEE SHEET 1 GENERAL NOTES FOR INSTRUCTIONS OF HOW TO OBTAIN LINE F-9W.

## FOUNDATION PLAN

DGN File: N:\Projects\4433.04\Sheet.Files\Structures\F-9W\4433.f-9w-04.foundation.dgn
05-MAY-2005

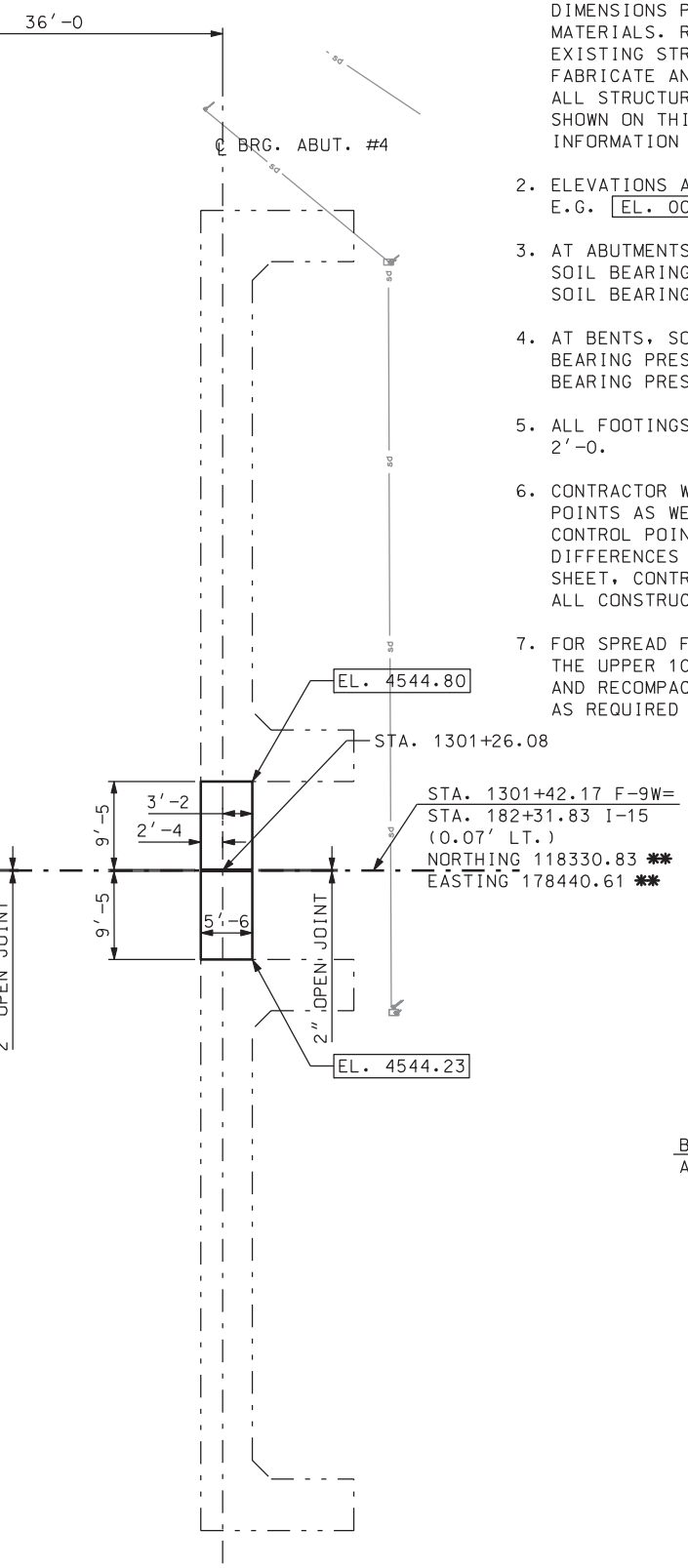


## NOTES:

1. ALL NEW SUBSTRUCTURE ELEMENTS ARE DESIGNED TO MATCH LOCATION AND DIRECTION OF EXISTING ELEMENTS. FIELD VERIFY ALL CONTROLLING DIMENSIONS PRIOR TO CONSTRUCTION AND FABRICATION OF ANY MATERIALS. REPORT ANY DISCREPANCY BETWEEN THESE PLANS AND THE EXISTING STRUCTURE TO THE ENGINEER. DO NOT CONSTRUCT OR FABRICATE ANY ELEMENTS UNTIL THE DISCREPANCIES ARE RESOLVED. ALL STRUCTURE GEOMETRY IS BASED ON LOCAL SURVEY CONTROL POINTS SHOWN ON THIS SHEET. THE I-15 STATIONING AND ALIGNMENT IS FOR INFORMATION ONLY.

2. ELEVATIONS AT THE BOTTOM OF FOOTING ARE SHOWN IN RECTANGLES, E.G. EL. 0000.00

3. AT ABUTMENTS, SOIL BEARING PRESSURE, Qr (STR. I) = 6.2 KSF. SOIL BEARING PRESSURE, Qr (SER. I) = 3.5 KSF FOR ½" SETTLEMENT. SOIL BEARING PRESSURE, Qr (SER. I) = 7.0 KSF FOR 1" SETTLEMENT.

4. AT BENTS, SOIL BEARING PRESSURE, Qr (STR. I) = 7.4 KSF. SOIL BEARING PRESSURE, Qr (SER. I) = 4.5 KSF FOR ½" SETTLEMENT. SOIL BEARING PRESSURE, Qr (SER. I) = 9.1 KSF FOR 1" SETTLEMENT.

5. ALL FOOTINGS WILL BE COVERED WITH A MINIMUM DEPTH OF SOIL OF 2'-0.

6. CONTRACTOR WILL FIELD VERIFY NORTHING AND EASTING OF ALL CONTROL POINTS AS WELL AS THE RELATIVE ELEVATION DIFFERENCES BETWEEN ALL CONTROL POINTS. IF THE NORTHING, EASTING OR RELATIVE ELEVATION DIFFERENCES VARY BY MORE THAN ± 1" FROM WHAT IS GIVEN ON THIS SHEET, CONTRACTOR WILL REPORT THEM TO THE ENGINEER AND STOP ALL CONSTRUCTION UNTIL DISCREPANCIES ARE RESOLVED.

7. FOR SPREAD FOOTINGS PLACED ON EXISTING SUBGRADE MATERIAL, SCARIFY THE UPPER 10 INCHES BELOW THE FOOTING ELEVATION, MOISTURE CONDITION, AND RECOMPACT TO AT LEAST 96% OF THE MAXIMUM LABORATORY DENSITY AS REQUIRED BY UDOT STANDARD SPECIFICATIONS SECTION 02324.

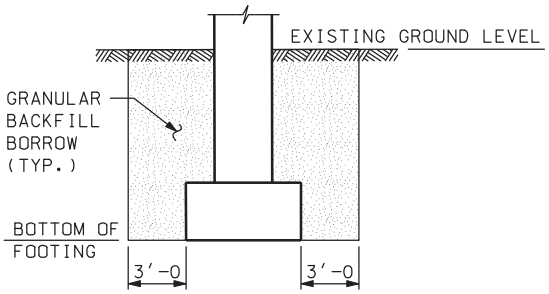


LIMITS OF GRANULAR BACKFILL BORROW AT BENTS

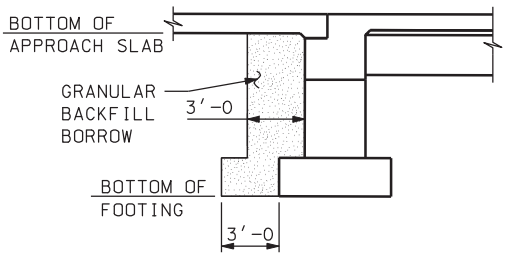


LIMITS OF GRANULAR BACKFILL BORROW AT ABUTMENTS

(ABUT. #1 SHOWN; ABUT. #4 SAME BY OPPOSITE HAND)

| CONTROL POINT DATA | | | |
|---|---|---|---|
| NUMBER | NORTHING | EASTING | ELEVATION |
| 1 | 118509.91 | 178513.78 | 4535.95 |
| 2 | 118476.69 | 178373.05 | 4553.42 |
| 3 | 118206.98 | 178224.18 | 4537.05 |

** F-9W BEARING FROM END OF APPROACH SLAB TO END OF APPROACH SLAB

| NO. | DATE | BY | REMARKS |
|---|---|---|---|

REVISIONS

UTAH DEPARTMENT OF TRANSPORTATION
SALT LAKE CITY, UTAH
STRUCTURES DIVISION

DESIGN MDR 12/04 CHECK GG 12/04
DRAWN LM 12/04 CHECK MDR 12/04
QUANT. MDR 12/04 CHECK LM 12/04

APPROVAL RECOMM. DATE SENIOR DESIGN ENGR.
APPROVED FOR USE BY UDOT DATE UDOT BRIDGE ENGR.

I-15; CORRIDOR IN UTAH COUNTY
100 EAST OVERPASS IN LEHI
FOUNDATION PLAN

PROJECT NUMBER SP-15-6(52)241

UTAH
COUNTY

F-9W
DRG. NO.

SHT. 4 OF 21

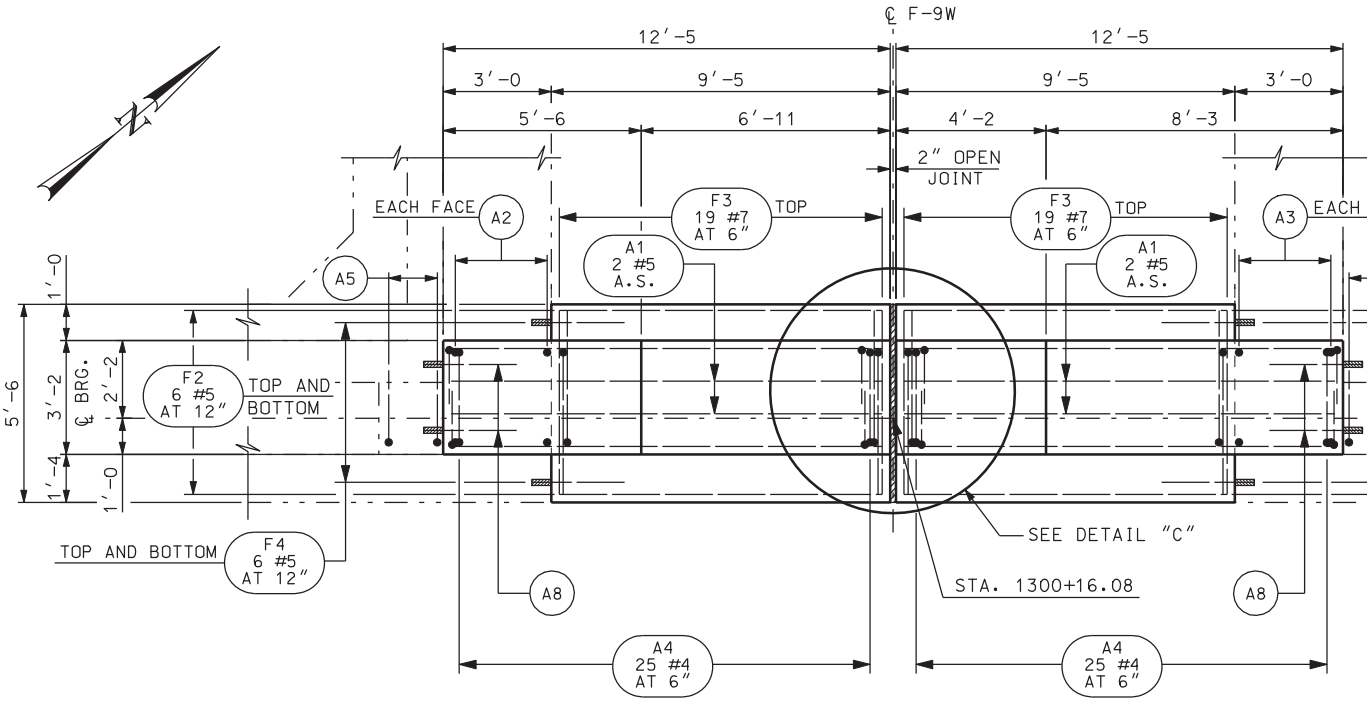


PLAN

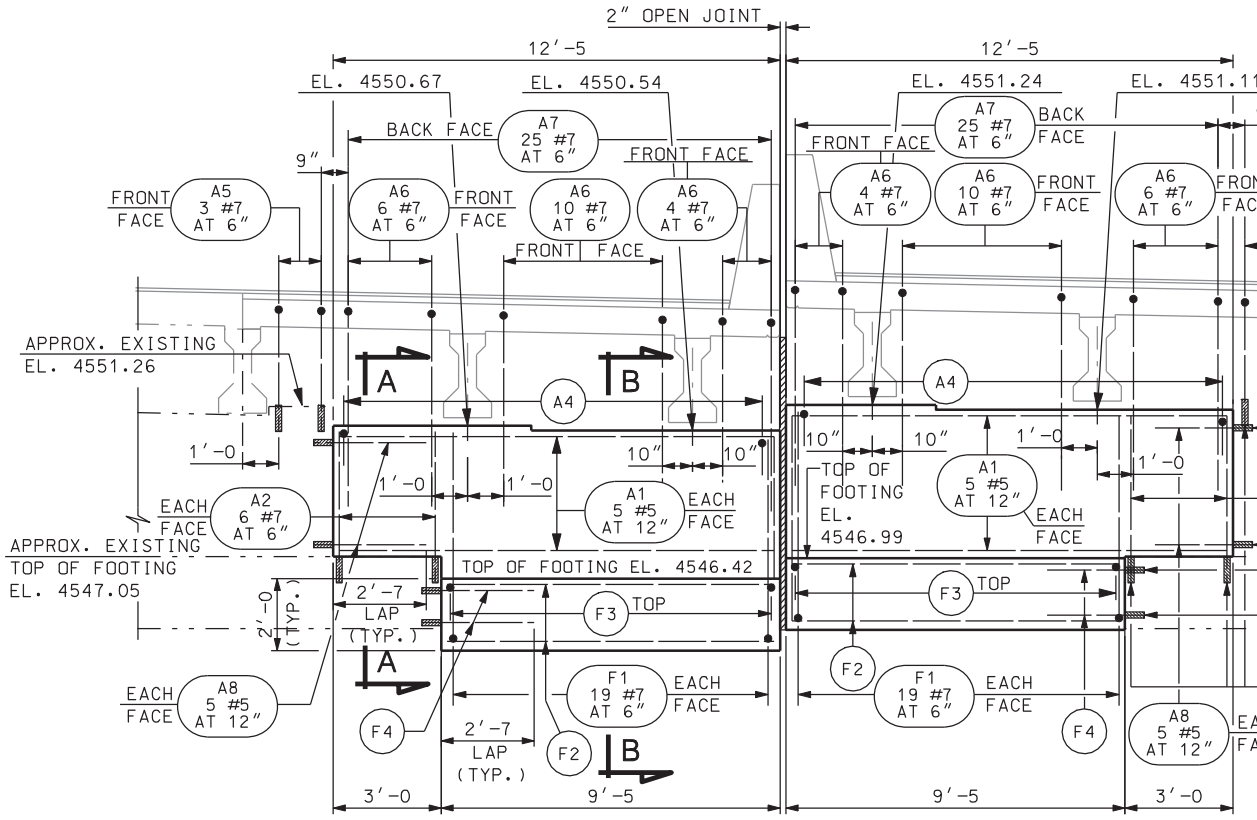


ELEVATION

DGN File: N:\Projects\4433.04\Sheet.Files\Structures\F-9W\4433.f-9w-05.abutment1.dgn

05-MAY-2005

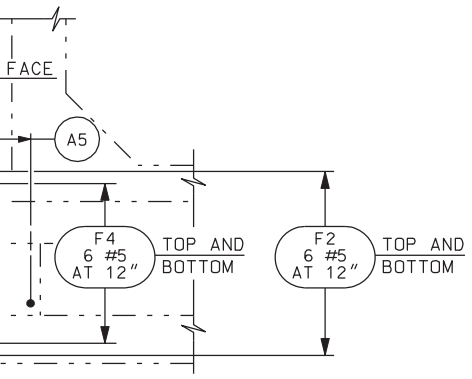


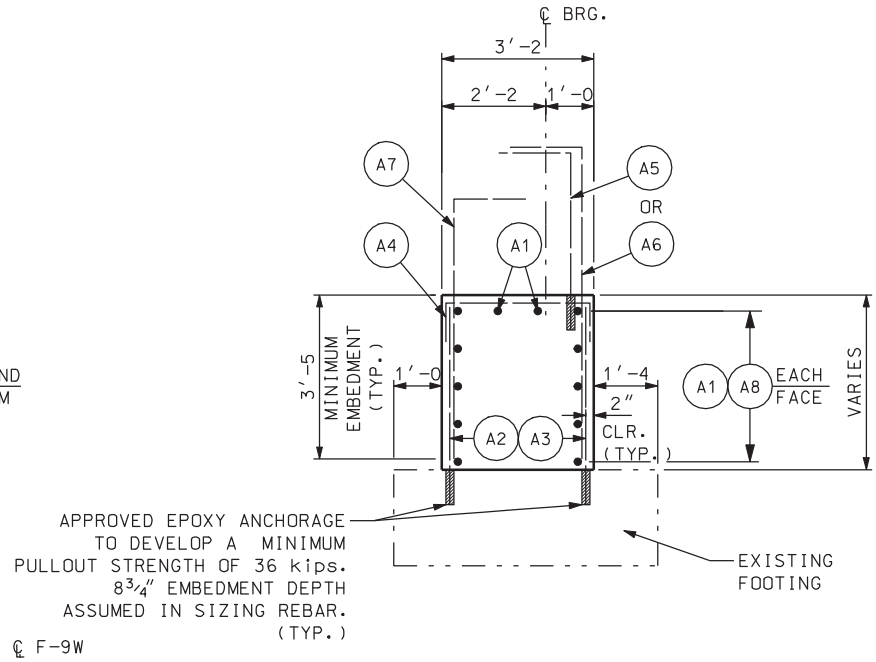


## SECTION A-A

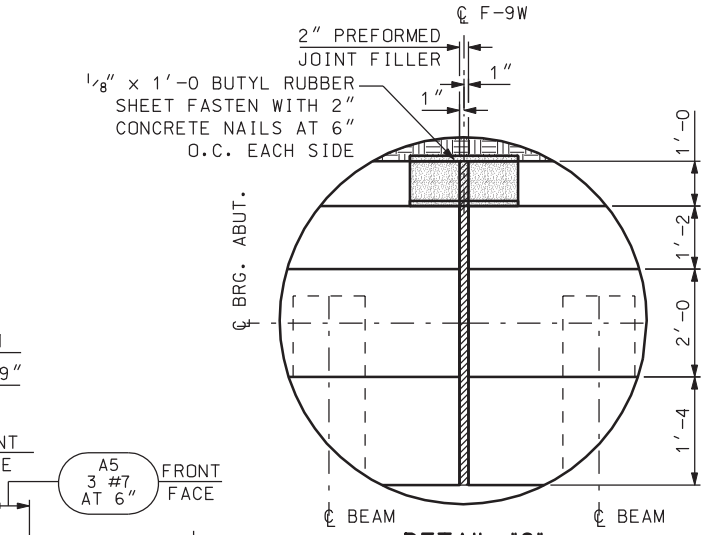


## DETAIL "C"

(USE RUBBER SHEET ON
FACES OF JOINT IN
CONTACT WITH SOIL)

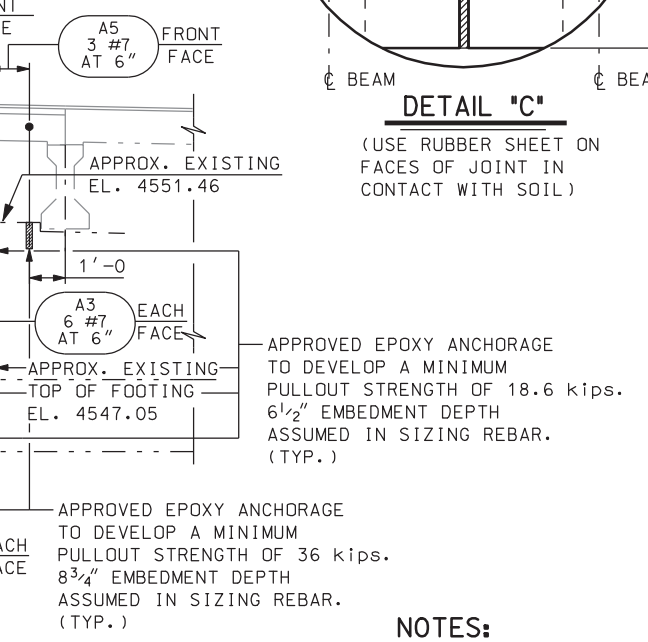


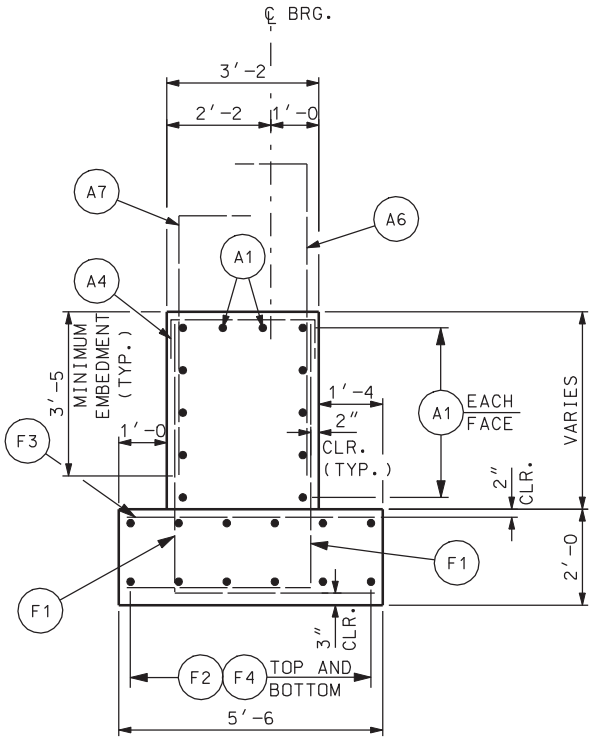


## SECTION B-B

## NOTES:

1. BAR SPACING IS THE MAXIMUM SPACING. SPACING IS ROUNDED TO THE NEAREST INCH.
2. FINISH BRIDGE SEAT BEARING AREA (2" LARGER THAN BEARING PAD) HIGH AND RUB OR GRIND LEVEL TO ELEVATION SHOWN ± ⅛". NO GROUTING ALLOWED.
3. PLACE ALL EPOXY ANCHORAGES INSIDE OF EXISTING REBAR.

## QUANTITIES

| | |
|---|---|
| STRUCTURAL CONCRETE | |
| FOOTING - NORTHBOUND | 3.9 CU. YDS. |
| FOOTING - SOUTHBOUND | 3.9 CU. YDS. |
| ABUTMENT - NORTHBOUND | 6.1 CU. YDS. |
| ABUTMENT - SOUTHBOUND | 5.9 CU. YDS. |
| TOTAL | 19.8 CU. YDS. |

| NO. | DATE | BY | REMARKS |
|---|---|---|---|
| | | | |

REVISIONS

UTAH DEPARTMENT OF TRANSPORTATION
SALT LAKE CITY, UTAH
STRUCTURES DIVISION

DESIGN MDR 12/04 CHECK GG 12/04
DRAWN LM 12/04 CHECK MDR 12/04
QUANT. MDR 12/04 CHECK LM 12/04

APPROVAL RECOMM. DATE SENIOR DESIGN ENGR.
APPROVED FOR USE BY UDOT DATE UDOT BRIDGE ENGR.

I-15: CORRIDOR IN UTAH COUNTY
100 EAST OVERPASS IN LEHI
ABUTMENT #1 DETAILS

PROJECT NUMBER SP-15-6(52)241

UTAH
COUNTY

F-9W
DRG. NO.

SHT. 5 OF 21

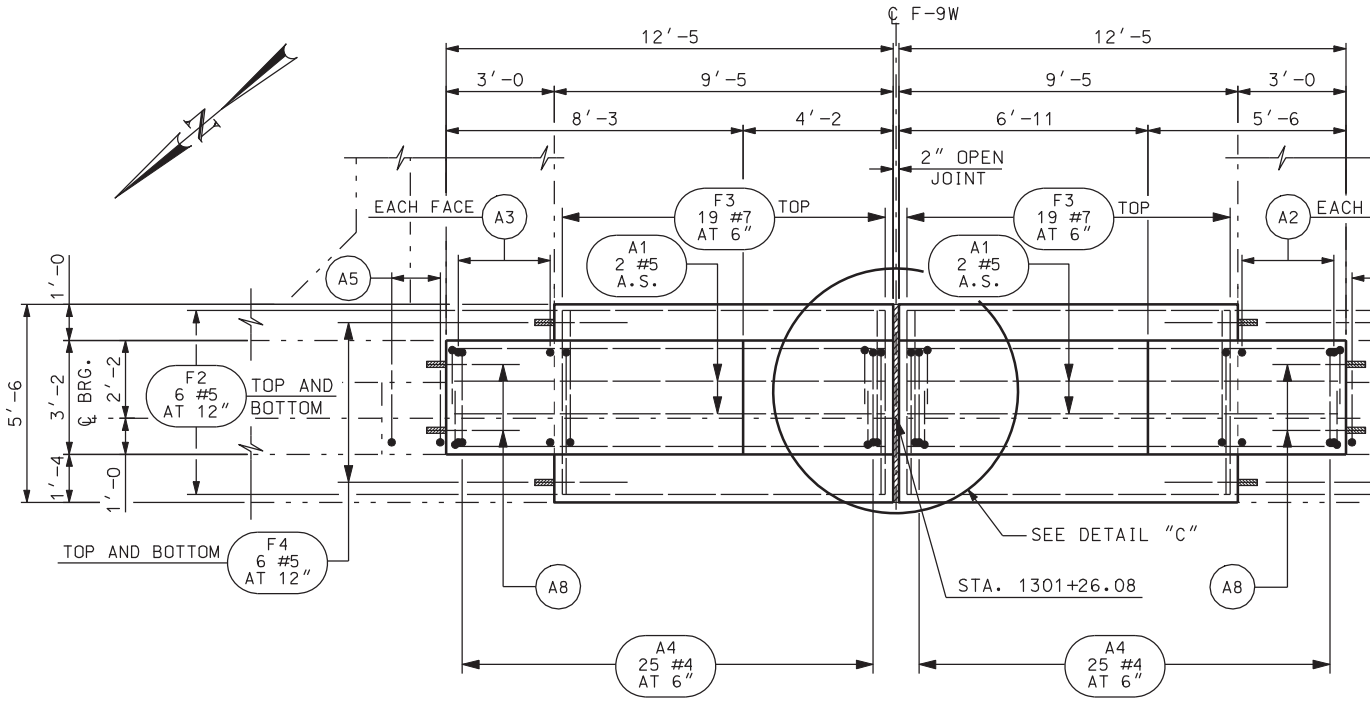


PLAN

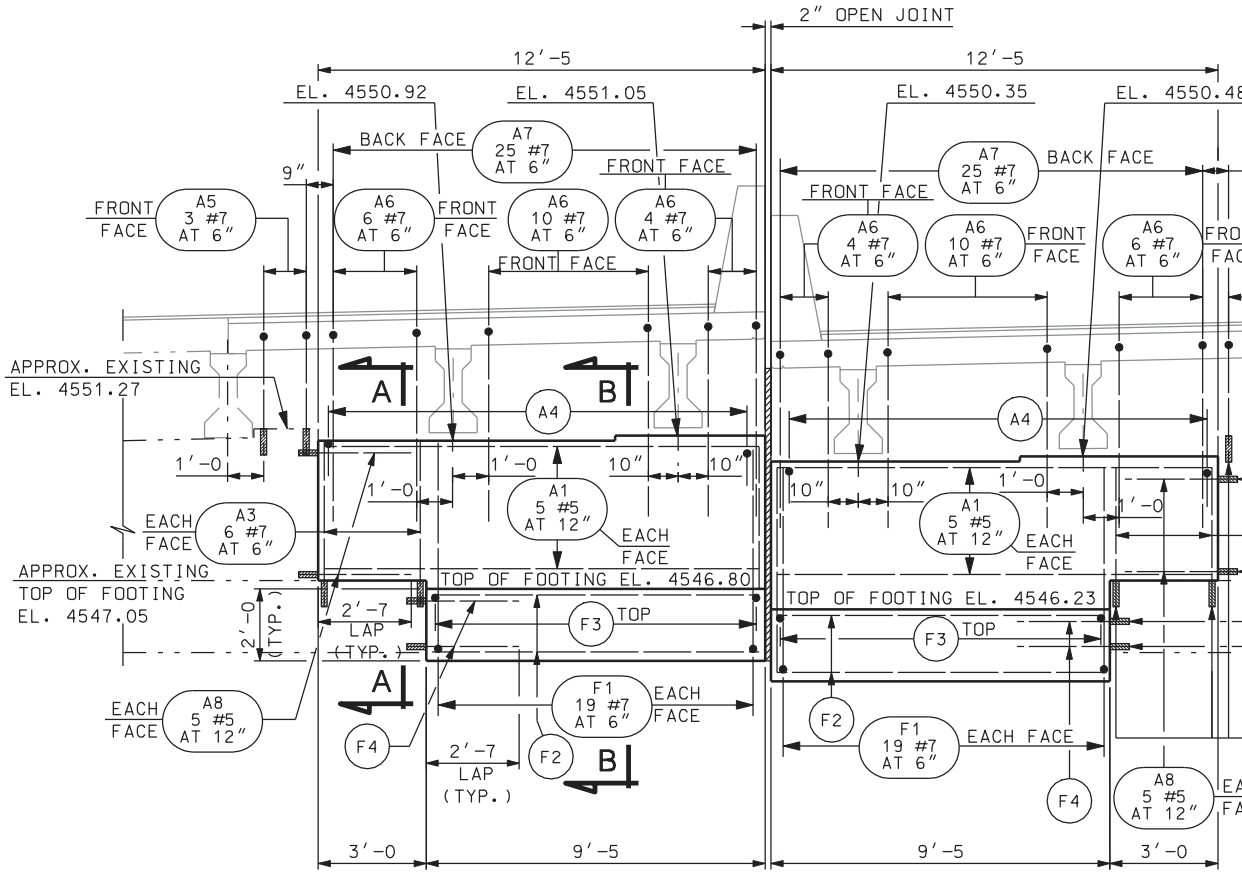


ELEVATION

DGN File: N:\Projects\4433.04\Sheet.Files\Structures\F-9W\4433.f-9w-06.abutment4.dgn

05-MAY-2005

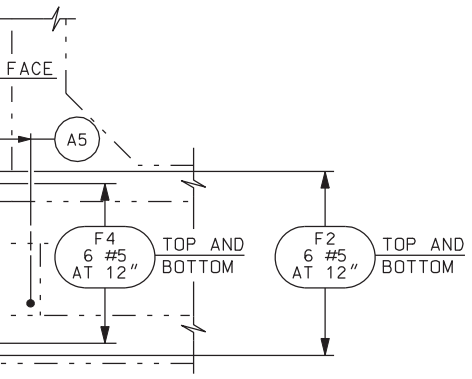


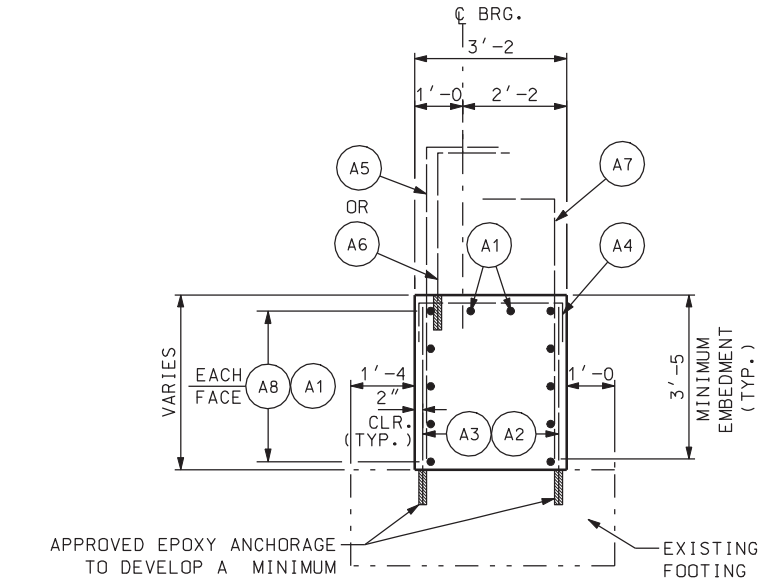


SECTION A-A

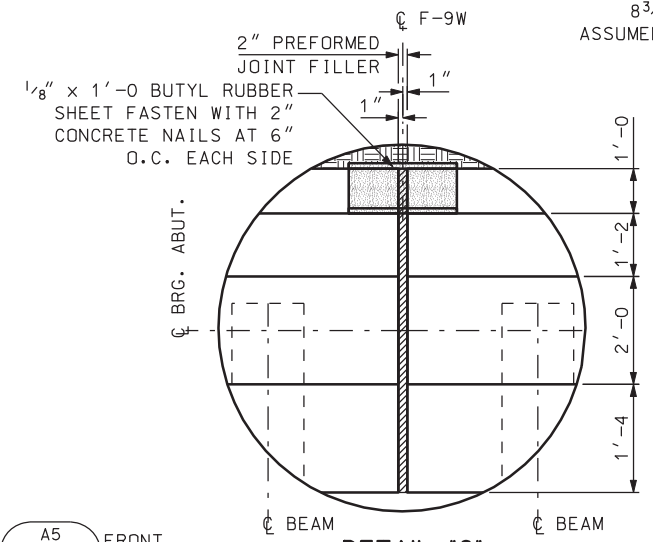


DETAIL "C"

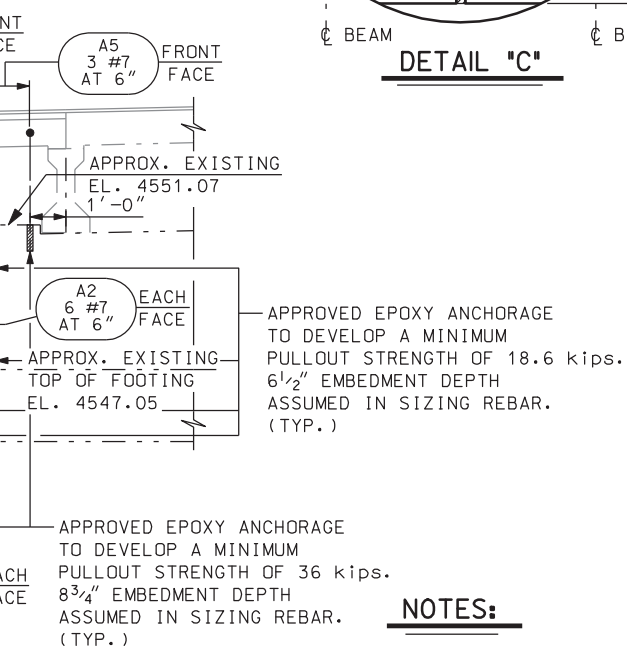


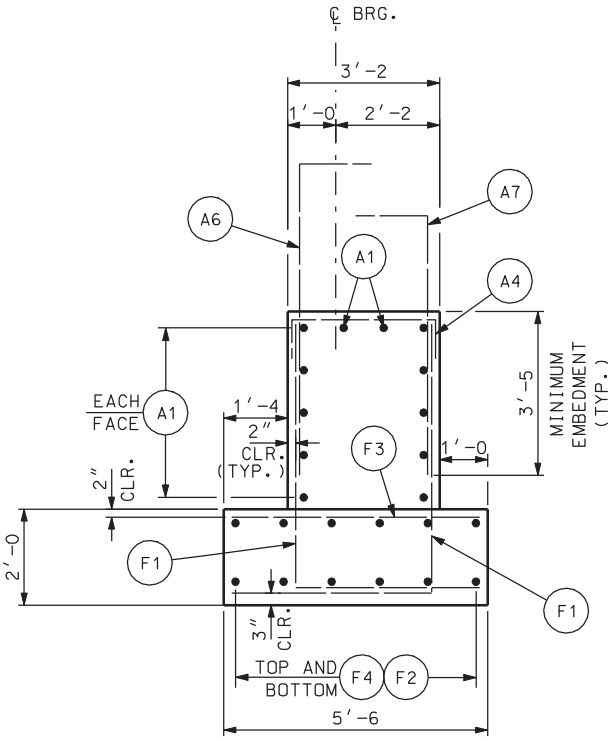


SECTION B-B

## NOTES:

1. BAR SPACING IS THE MAXIMUM SPACING. SPACING IS ROUNDED TO THE NEAREST INCH.
2. FINISH BRIDGE SEAT BEARING AREA (2" LARGER THAN BEARING PAD) HIGH AND RUB OR GRIND LEVEL TO ELEVATION SHOWN ± ⅛". NO GROUTING ALLOWED.
3. PLACE ALL EPOXY ANCHORAGES INSIDE OF EXISTING REBAR.

## QUANTITIES

| | |
|---|---|
| STRUCTURAL CONCRETE | |
| FOOTING - NORTHBOUND | 3.9 CU. YDS. |
| FOOTING - SOUTHBOUND | 3.9 CU. YDS. |
| ABUTMENT - NORTHBOUND | 6.0 CU. YDS. |
| ABUTMENT - SOUTHBOUND | 5.8 CU. YDS. |
| TOTAL | 19.6 CU. YDS. |

| NO. | DATE | BY | REMARKS |
|---|---|---|---|
| | | | |

REVISIONS

UTAH DEPARTMENT OF TRANSPORTATION
SALT LAKE CITY, UTAH
STRUCTURES DIVISION

DESIGN MDR 12/04 CHECK GG 12/04
DRAWN LM 12/04 CHECK MDR 12/04
QUANT. MDR 12/04 CHECK LM 12/04

APPROVAL RECOMM. DATE SENIOR DESIGN ENGR.
APPROVED FOR USE BY UDOT DATE UDOT BRIDGE ENGR.

I-15: CORRIDOR IN UTAH COUNTY
100 EAST OVERPASS IN LEHI
ABUTMENT #4 DETAILS

PROJECT NUMBER SP-15-6(52)241

UTAH
COUNTY

F-9W
DRG. NO.

SHT. 6 OF 21

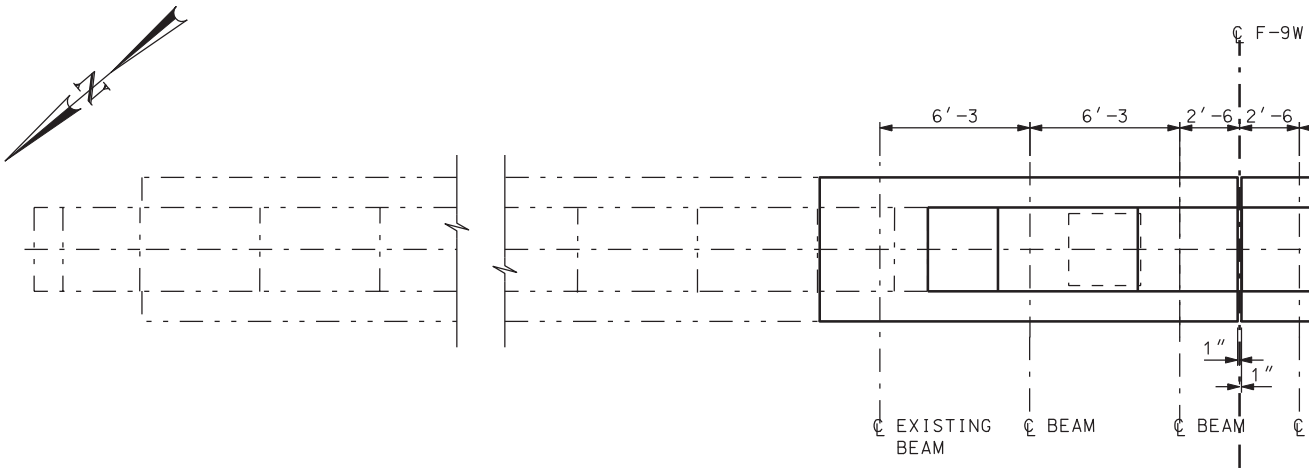


PLAN

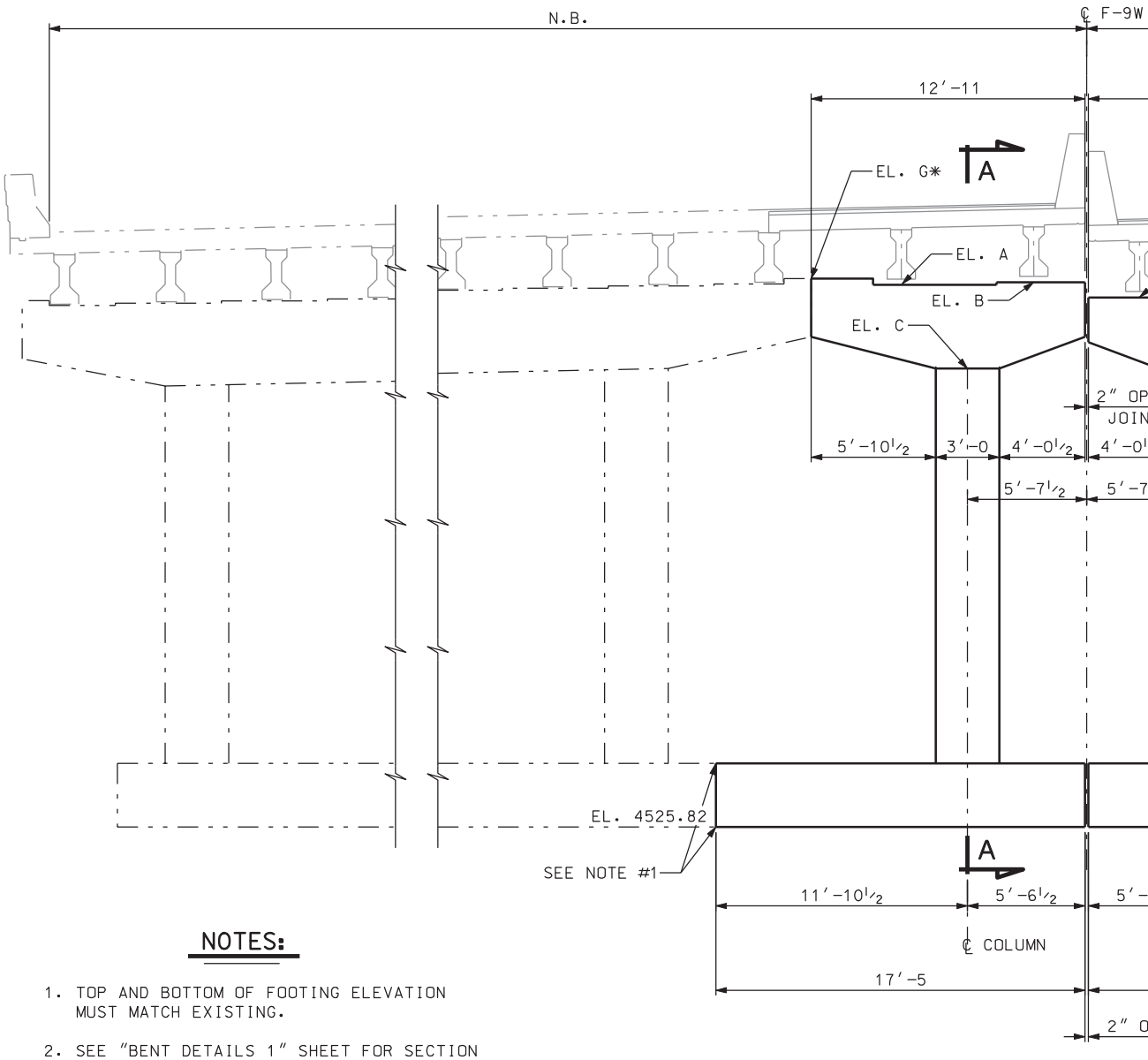


ELEVATION

BENT #3 SIMILA

## NOTES:

1. TOP AND BOTTOM OF FOOTING ELEVATION MUST MATCH EXISTING.
2. SEE "BENT DETAILS 1" SHEET FOR SECTION "A-A".

DGN File: N:\Projects\4433.04\Sheet.Files\Structures\F-9W\4433.f-9w-07.bentplan.dgn
05-MAY-2005

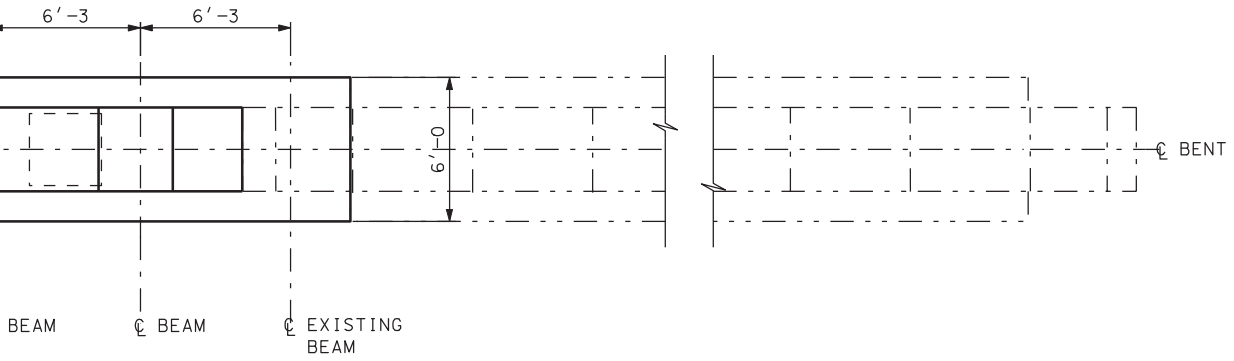


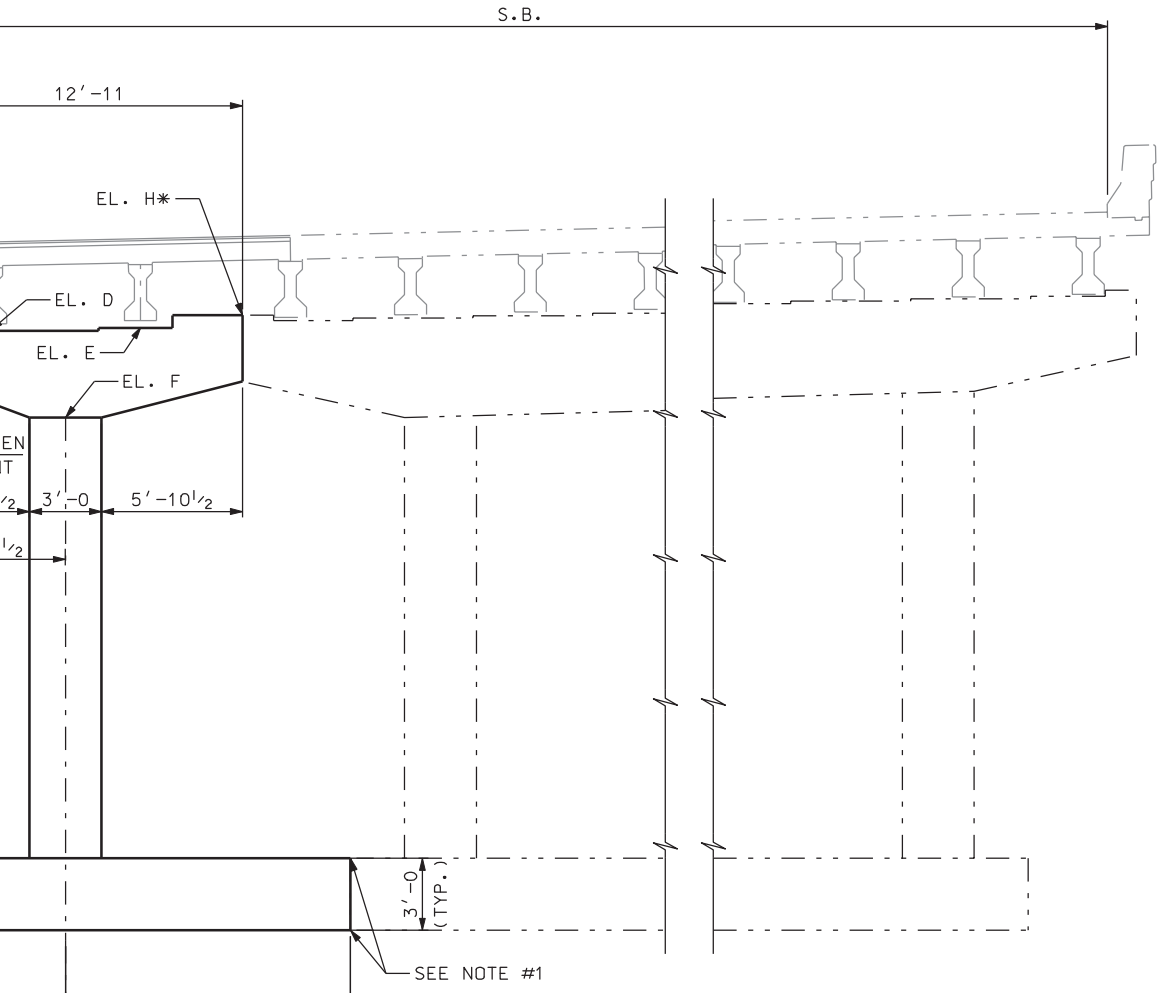


## BENT CAP ELEVATIONS

| LOCATION | A | B | C | D | E | F | G | H |
|---|---|---|---|---|---|---|---|---|
| BENT #2 | 4551.11 | 4551.24 | 4547.21 | 4550.54 | 4550.67 | 4547.01 | 4551.46 | 4551.26 |
| BENT #3 | 4551.04 | 4551.17 | 4547.14 | 4550.47 | 4550.60 | 4546.94 | 4551.39 | 4551.19 |

* ELEVATIONS G AND H ARE FOR REFERENCE ONLY. MATCH TOP OF EXISTING CAP. IF REFERENCE ELEVATION DIFFERS FROM SURVEYED ELEVATION BY MORE THAN 1", NOTIFY THE ENGINEER.

REVISIONS

| NO. | DATE | BY | REMARKS |
|---|---|---|---|

UTAH DEPARTMENT OF TRANSPORTATION
SALT LAKE CITY, UTAH
STRUCTURES DIVISION

DESIGN GG 12/04 CHECK HCB 12/04
DRAWN LM 12/04 CHECK GG 12/04
QUANT. GG 12/04 CHECK LM 12/04

APPROVAL RECOMM. DATE SENIOR DESIGN ENGR.
APPROVED FOR USE BY UDOT DATE UDOT BRIDGE ENGR.

I-15; CORRIDOR IN UTAH COUNTY
100 EAST OVERPASS IN LEHI
BENT PLAN AND ELEVATION

PROJECT NUMBER SP-15-6(52)241

UTAH
COUNTY

F-9W
DRG. NO.

SHT. 7 OF 21

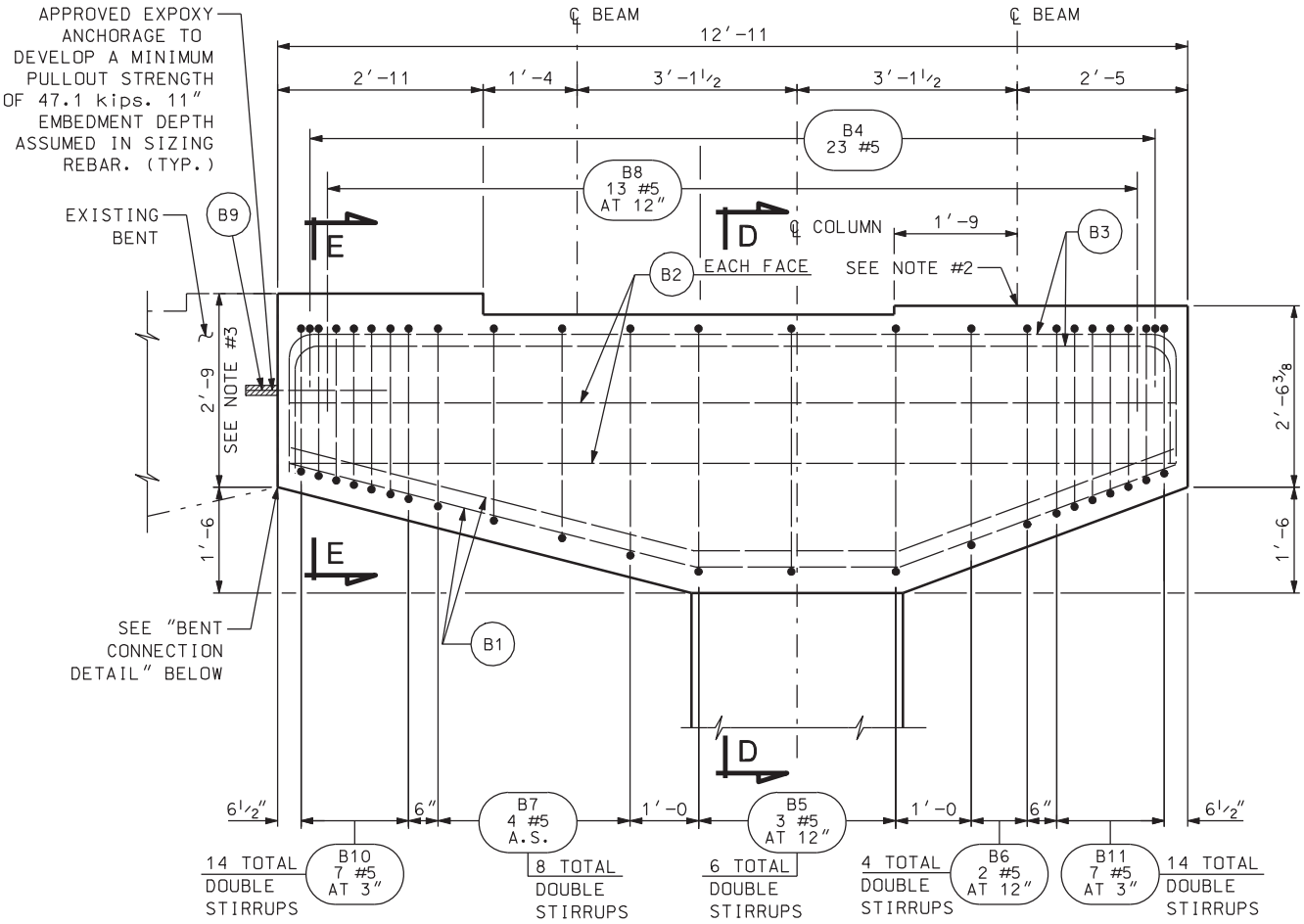


## N.B. BENT CAP DETAIL

(SEE "BENT DETAILS 2" SHEET FOR S.B. BENT CAP DETAILS)

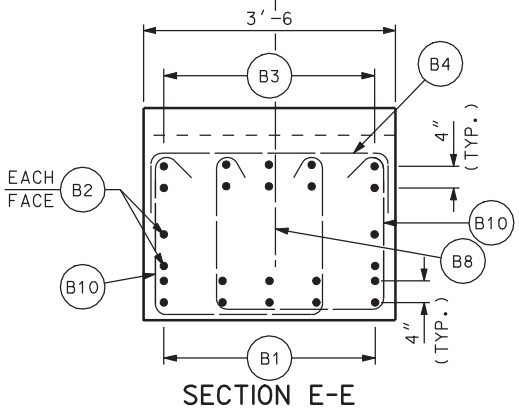


## SECTION E-E

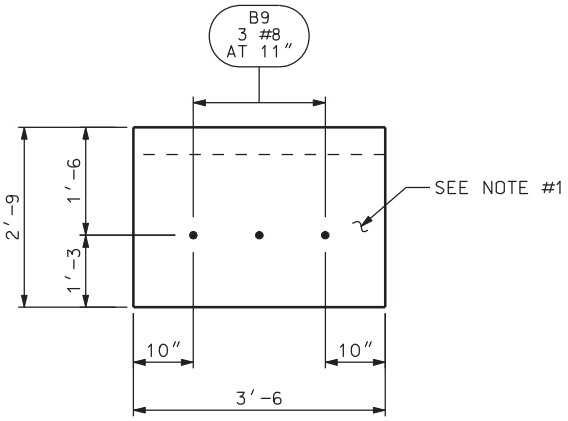


## BENT CONNECTION DETAIL

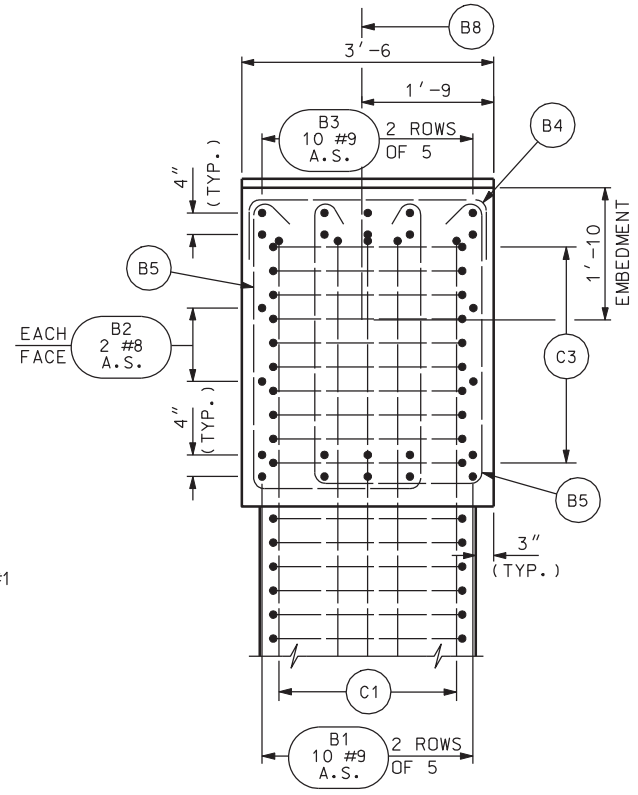


## SECTION D-D

1. FA
AM
AN

2. FI
TH
LE
AL

3. MA

DGN File: N:\Projects\4433.04\Sheet.Files\Structures\F-9W\4433.f-9w-08.bentdetail.dgn

05-MAY-2005

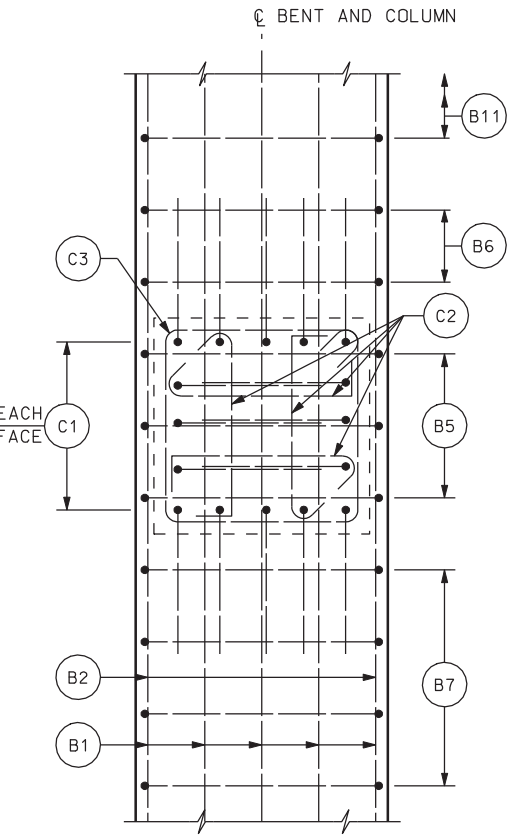


SECTION B-B

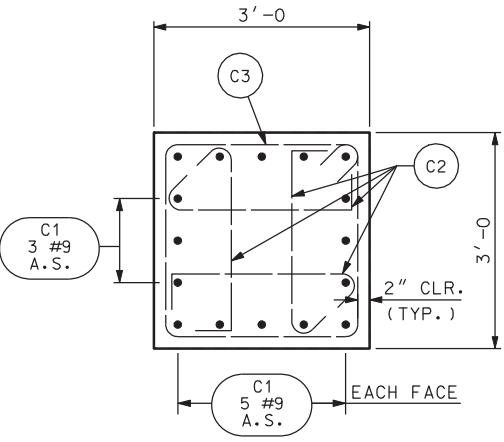


SECTION C-C

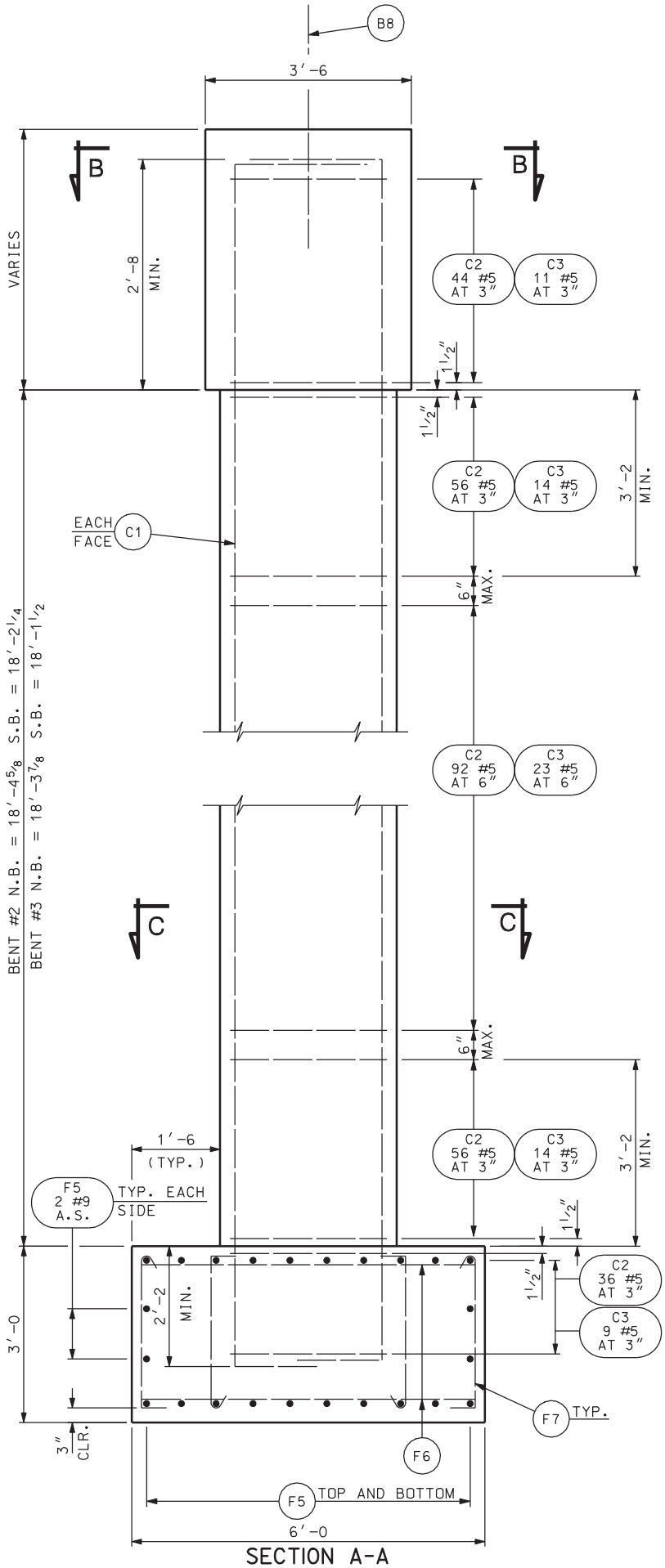


SECTION A-A

## NOTES:

CE OF EXISTING TO BE ROUGHENED TO AN
PLITUDE OF ½″ BEFORE DOWELS ARE PLACED
D FORMS ARE SET FOR NEW CONSTRUCTION.

NISH BRIDGE SEAT BEARING AREA (2″ LARGER
AN BEARING PAD) HIGH AND RUB OR GRIND
VEL TO ELEVATION SHOWN ± ⅛″. NO GROUTING
LOWED

TCH TOP AND BOTTOM OF EXISTING BENT CAP.

| NO. | DATE | BY | REMARKS |
|---|---|---|---|

REVISIONS

UTAH DEPARTMENT OF TRANSPORTATION
SALT LAKE CITY, UTAH
STRUCTURES DIVISION

DESIGN GG 12/04 CHECK HCB 12/04
DRAWN LM 12/04 CHECK GG 12/04
QUANT. GG 02/05 CHECK MDR 02/05

APPROVAL RECOMM. DATE SENIOR DESIGN ENGR.
APPROVED FOR USE BY UDOT DATE UDOT BRIDGE ENGR.

I-15; CORRIDOR IN UTAH COUNTY
100 EAST OVERPASS IN LEHI
BENT DETAILS 1

PROJECT NUMBER SP-15-6(52)241

UTAH
COUNTY

F-9W
DRG. NO.

SHT. 8 OF 21

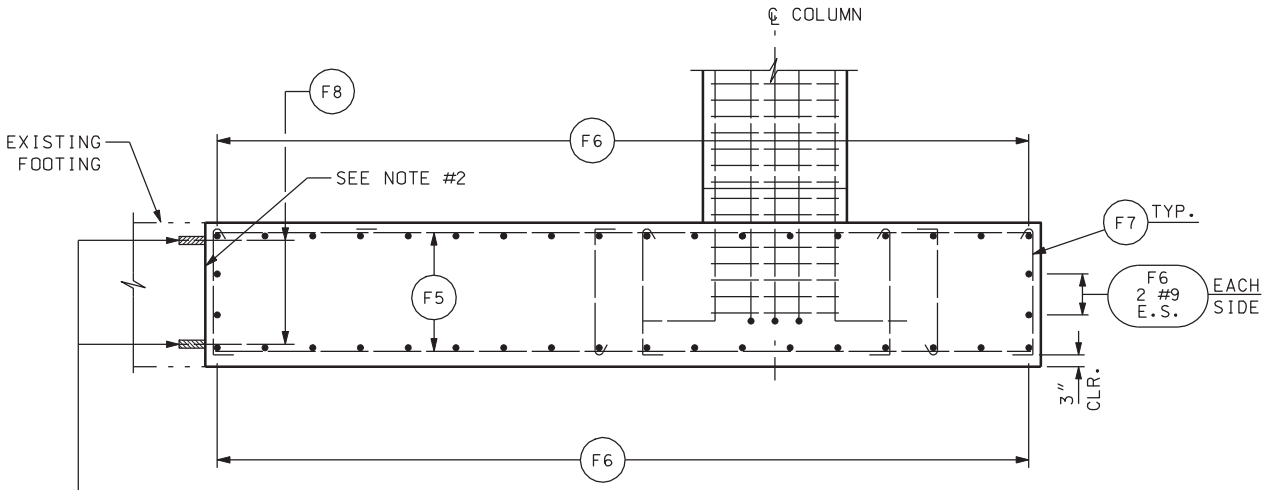


## SECTION F-F

BENT #3 SIMILAR

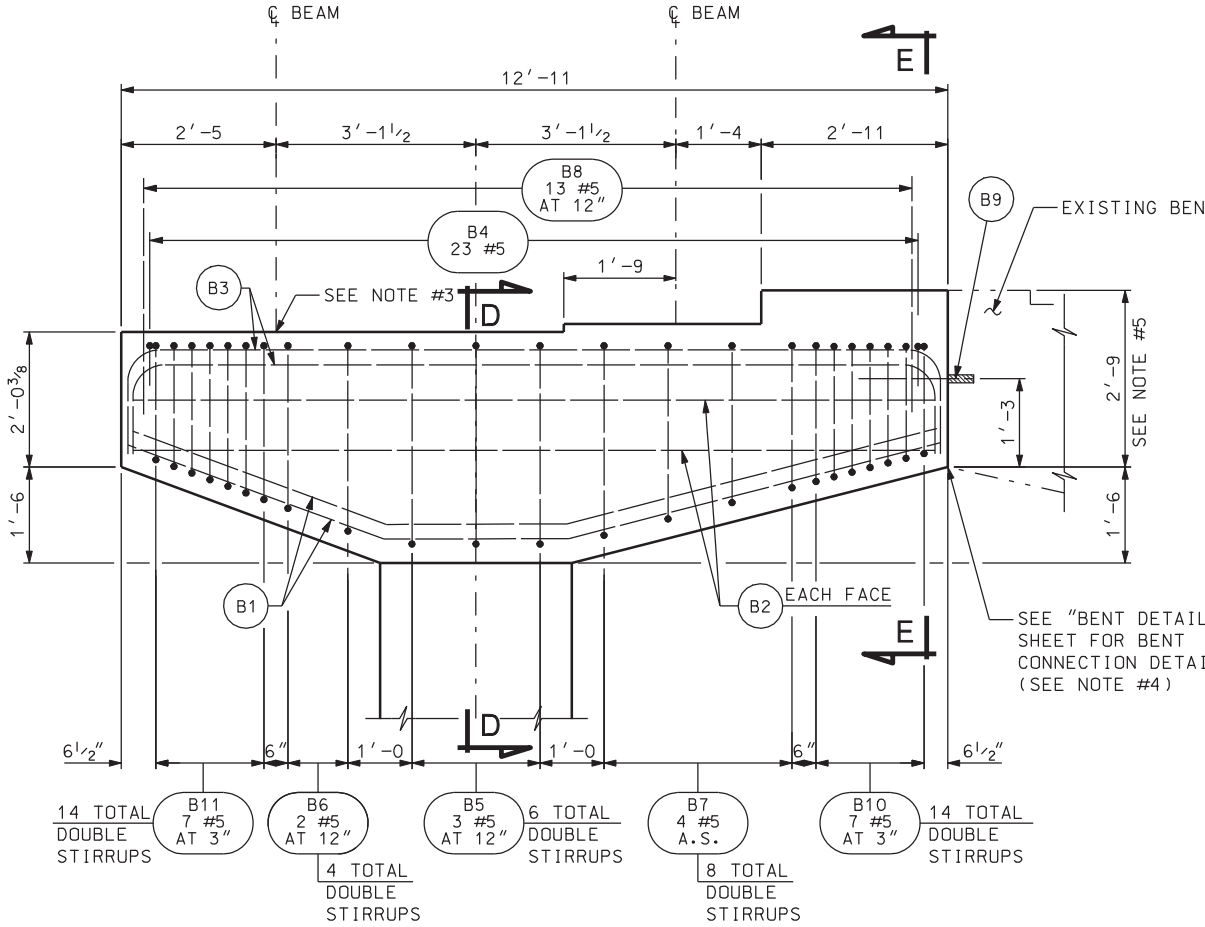


## S.B. BENT CAP DETAIL

DGN File:N:\Projects\4433.04\Sheet.Files\Structures\F-9W\4433.f-9w-09.bentdetail2.dgn
05-MAY-2005

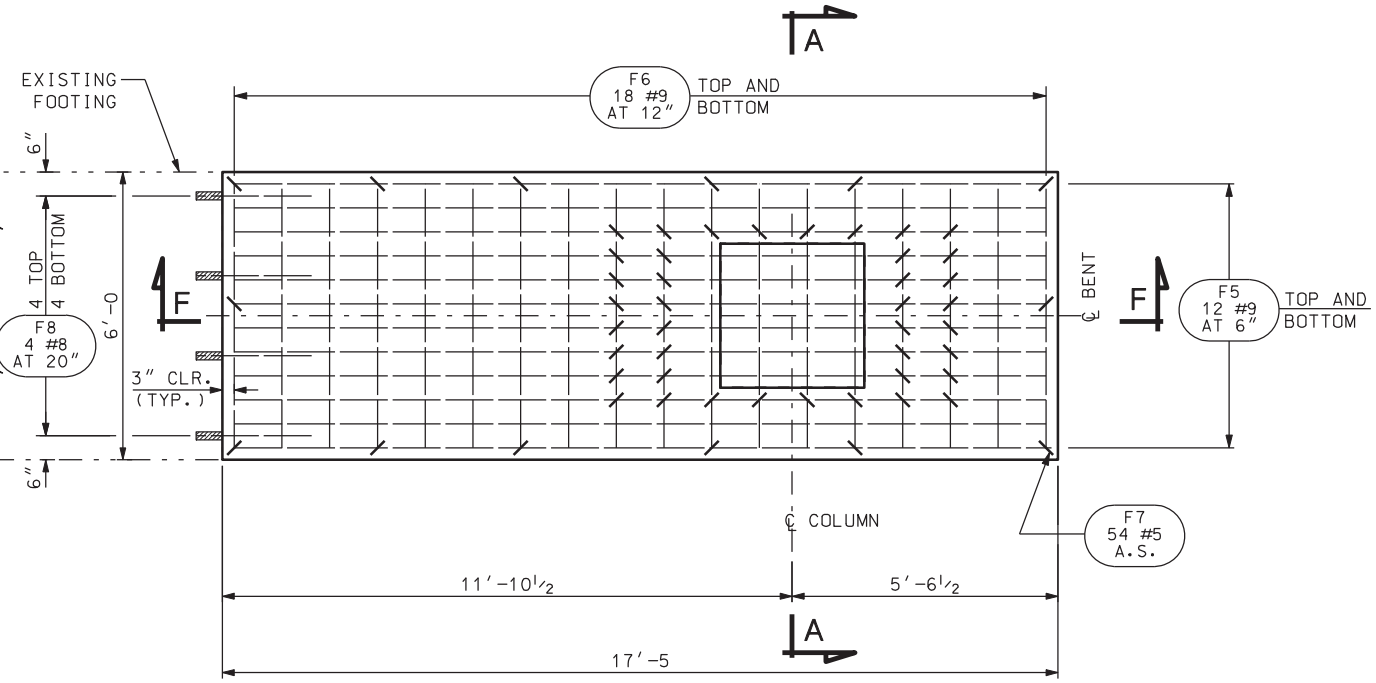


## FOOTING PLAN

(COLUMN REINFORCEMENT NOT SHOWN FOR CLARITY)
BENT #3 SIMILAR

## NOTES:

1. SEE "BENT DETAILS 1" SHEET FOR SECTIONS A-A, D-D AND E-E.
2. FACE OF EXISTING TO BE ROUGHENED BEFORE DOWELS ARE PLACED AND FORMS ARE SET FOR NEW CONSTRUCTION.
3. FINISH BRIDGE SEAT BEARING AREA (2" LARGER THAN BEARING PAD) HIGH AND RUB OR GRIND LEVEL TO ELEVATION SHOWN ± ⅛". NO GROUTING ALLOWED.
4. MATCH TOP AND BOTTOM OF EXISTING BENT CAP.

## STRUCTURAL CONCRETE QUANTITIES (CU. YDS.)

| | BENT #2 | | BENT #3 | |
|---|---|---|---|---|
| | NORTHBOUND | SOUTHBOUND | NORTHBOUND | SOUTHBOUND |
| BENT CAP | 5.8 | 5.3 | 5.8 | 5.3 |
| COLUMN | 6.1 | 6.1 | 6.1 | 6.0 |
| FOOTING | 11.6 | 11.6 | 11.6 | 11.6 |
| SUBTOTAL | 23.5 | 23.0 | 23.5 | 22.9 |
| TOTAL | 92.9 | | | |

REVISIONS

| NO. | DATE | BY | REMARKS |
|---|---|---|---|
| | | | |

UTAH DEPARTMENT OF TRANSPORTATION
SALT LAKE CITY, UTAH
STRUCTURES DIVISION

DESIGN GG 12/04 CHECK HCB 12/04
DRAWN LM 12/04 CHECK GG 12/04
QUANT. GG 12/04 CHECK LM 12/04

APPROVAL RECOMM. DATE SENIOR DESIGN ENGR.
APPROVED FOR USE BY UDOT DATE UDOT BRIDGE ENGR.

I-15: CORRIDOR IN UTAH COUNTY
100 EAST OVERPASS IN LEHI
BENT DETAILS 2

PROJECT NUMBER SP-15-6(52)241

UTAH
COUNTY

F-9W
DRG. NO.

SHT. 9 OF 21

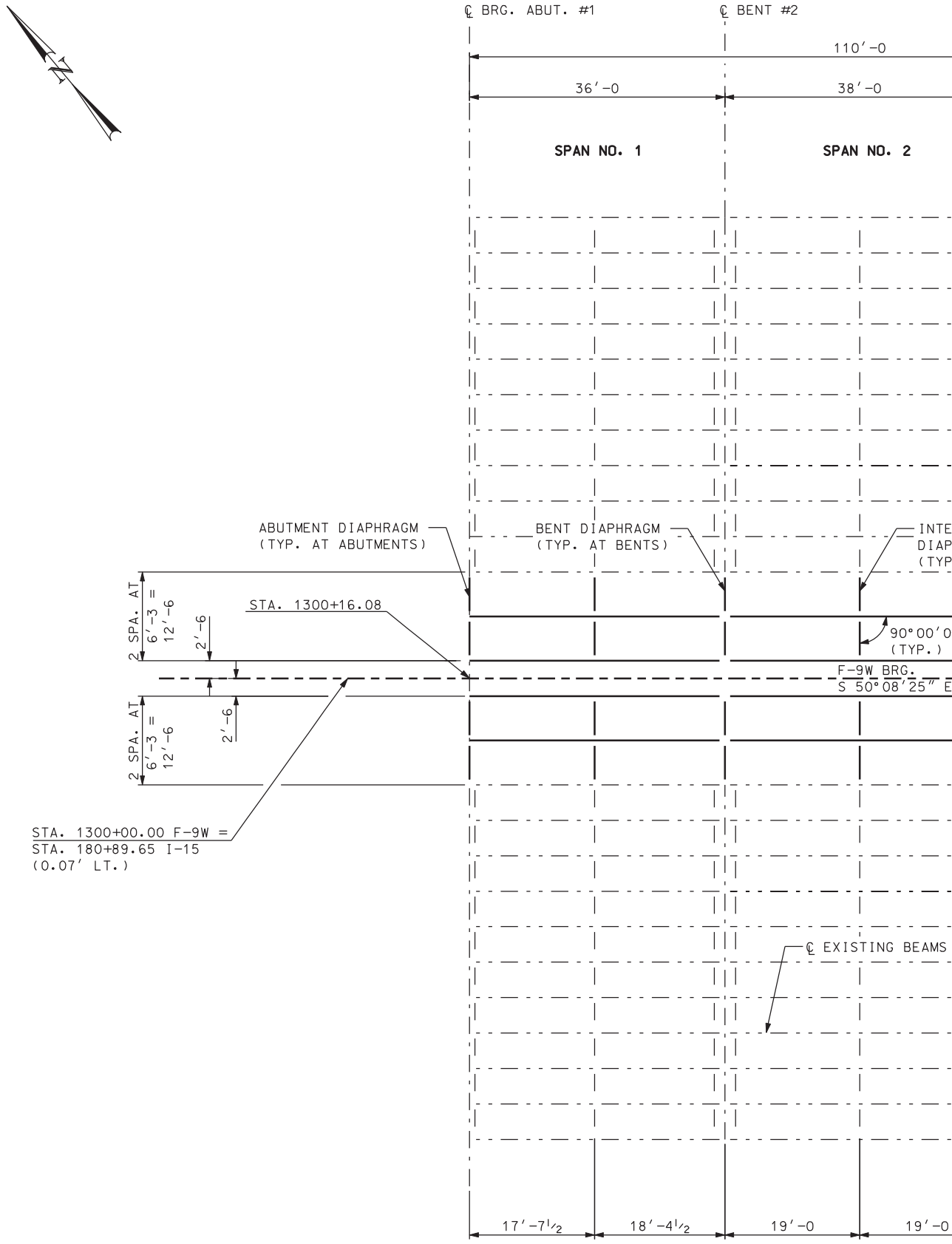


FRAMING PLAN

DGN File: N:\Projects\4433.04\Sheet.Files\Structures\F-9W\4433.f-9w-10.framing.dgn

05-MAY-2005

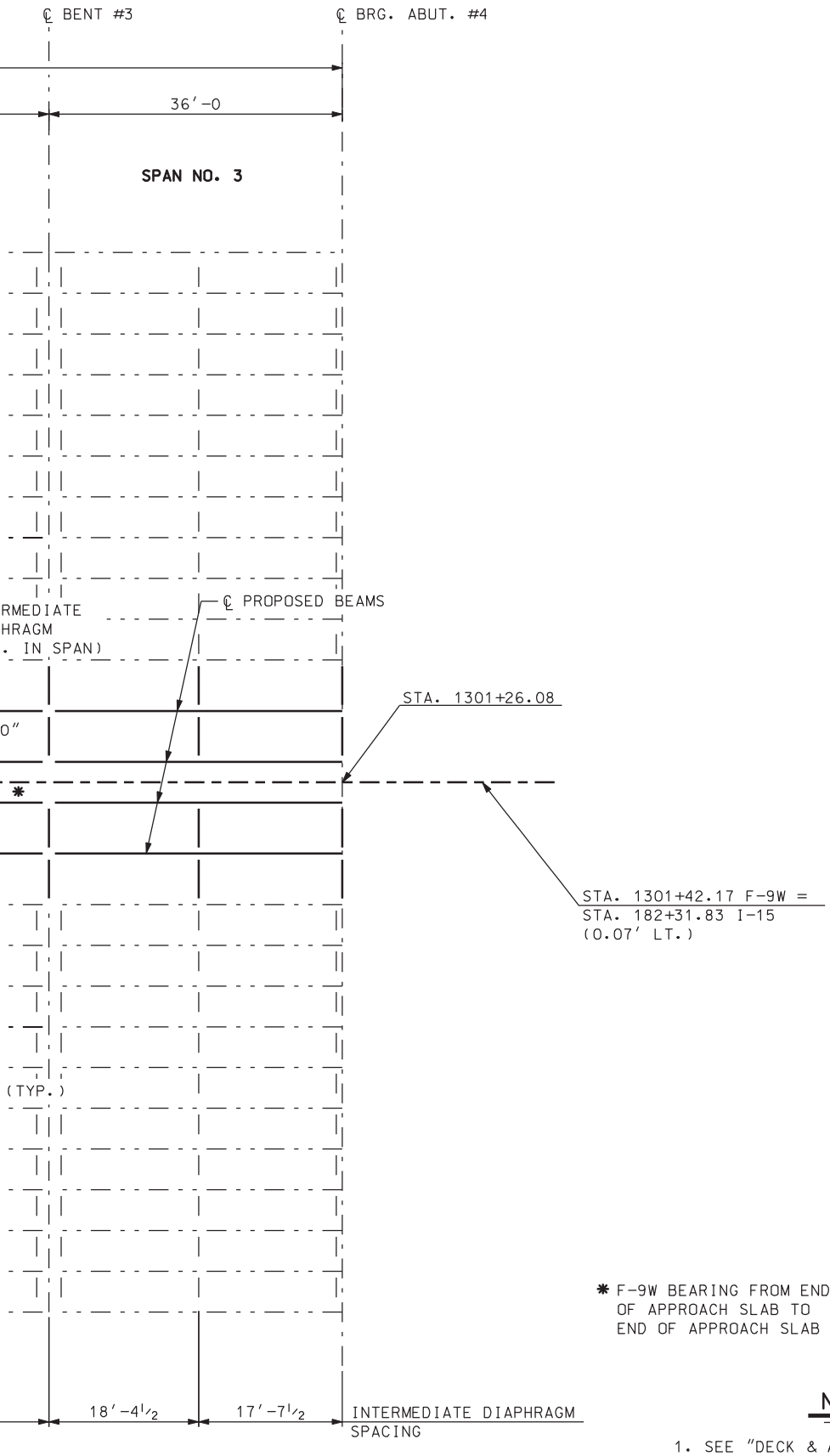


* F-9W BEARING FROM END OF APPROACH SLAB TO END OF APPROACH SLAB

## NOTES:

1. SEE "DECK & APPROACH SLAB DETAILS" SHEET FOR SECTION AT INTERMEDIATE DIAPHRAGM.

| NO. | DATE | BY | REMARKS |
|---|---|---|---|
| | | | |

REVISIONS

UTAH DEPARTMENT OF TRANSPORTATION
SALT LAKE CITY, UTAH
STRUCTURES DIVISION

DESIGN MDR 12/04 CHECK GG 12/04
DRAWN LM 12/04 CHECK MDR 12/04
QUANT. ____ CHECK ____

APPROVAL RECOMM. ____ DATE ____ SENIOR DESIGN ENGR.
APPROVED FOR USE BY UDOT ____ DATE ____ UDOT BRIDGE ENGR.

I-15: CORRIDOR IN UTAH COUNTY
100 EAST OVERPASS IN LEHI
FRAMING PLAN

PROJECT NUMBER SP-15-6(52)241

UTAH
COUNTY

F-9W
DRG. NO.

SHT. 10 OF 21

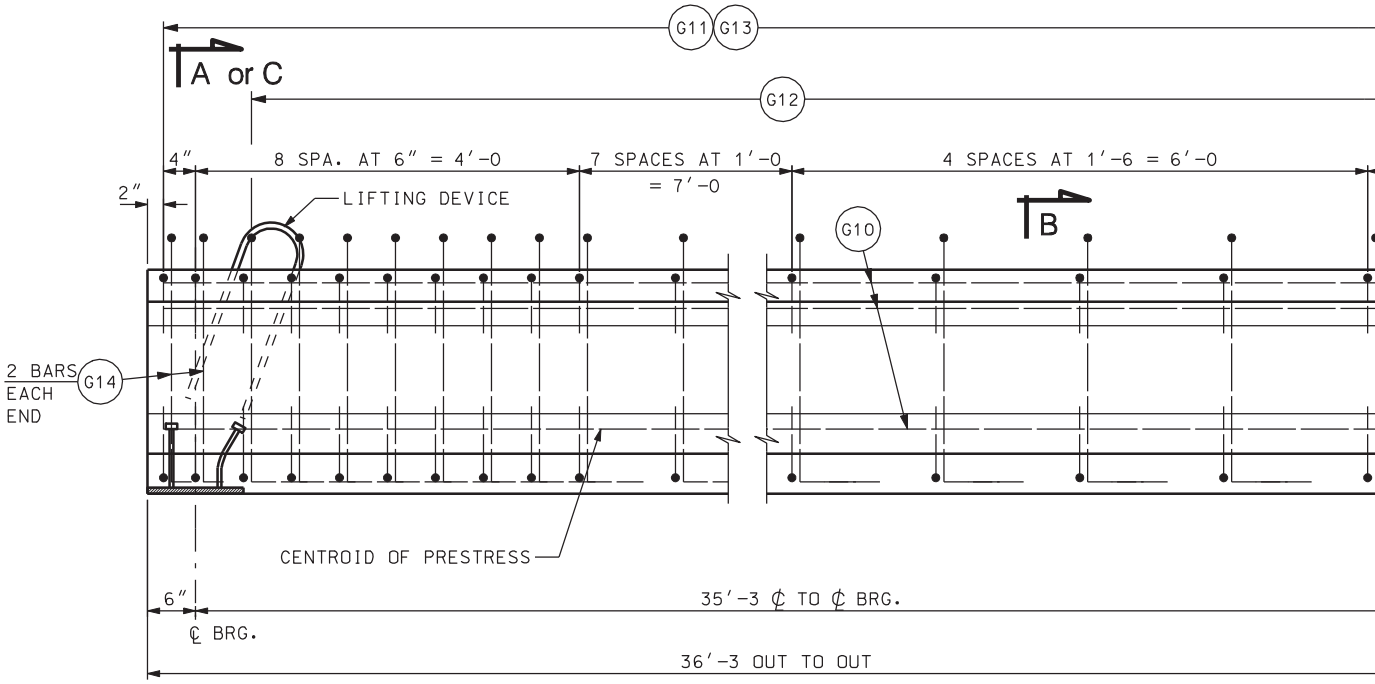


PARTIAL ELEVATION

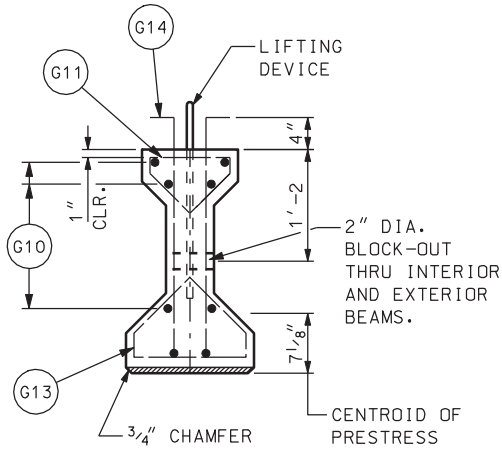


SECTION A-A

(AT ABUTMENT END)

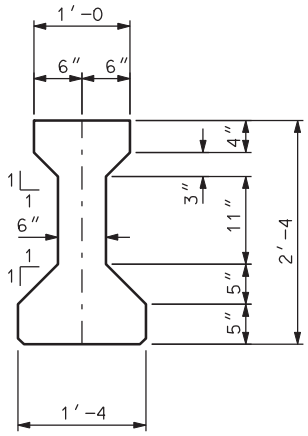


TYPICAL SECTION

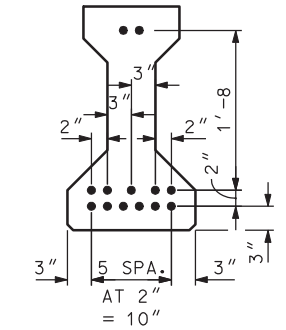


STRAND PATTERN

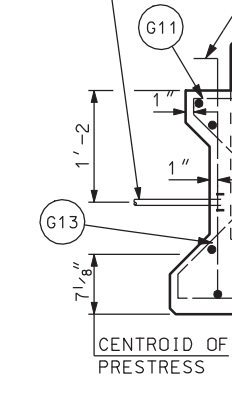


SECTIO

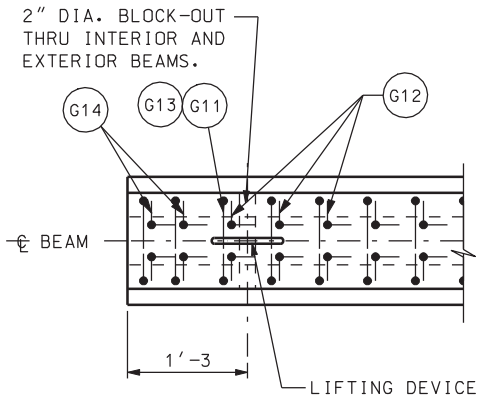


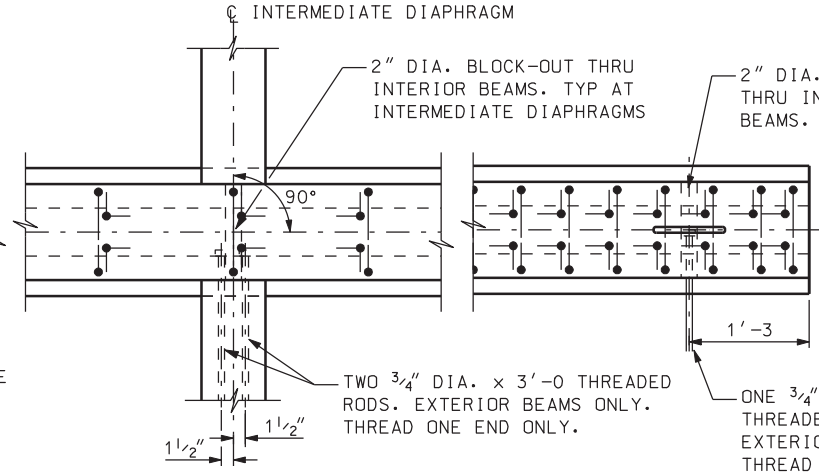


PARTIAL PLAN

DGN File: N:\Projects\4433.04\Sheet.Files\Structures\F-9W\4433.f-9w-11.beamdetail.dgn

05-MAY-2005

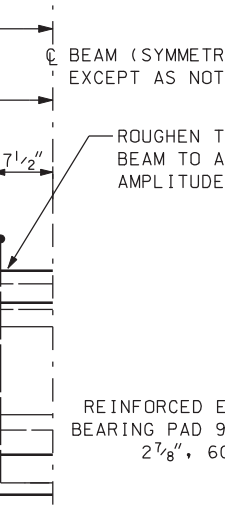


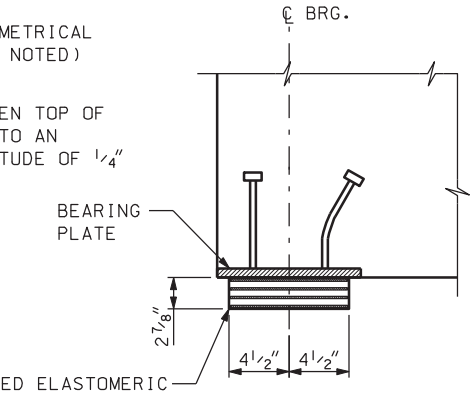


## BEARING DETAIL

## REINFORCING STEEL SCHEDULE

| MARK | SIZE NO. | LENGTH | SKETCH |
|---|---|---|---|
| G 10 | 4 | 35'-11 | |
| G 11 | 5 | 2'-4 | 2", 7", 10", 1, 1 |
| G 12 | 5 | 4'-0 | X, Y, 10", Z, 8", 2'-6 |
| G 13 | 5 | 3'-4 | 3", 10", 1'-2, 1, 1 |
| G 14 | 5 | 3'-5 | X, Y, 3", Z, 8", 2'-6 |

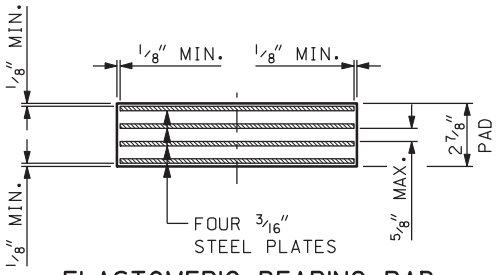


## ELASTOMERIC BEARING PAD

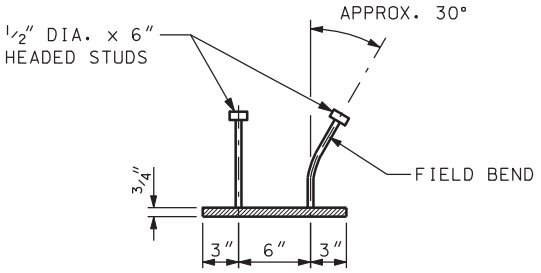


A. x 3'-0 THREADED
CONCRETE ANCHORS
TERIOR FACE OF THE
BEAMS ONLY.
T INTERMEDIATE
S. SEE FRAMING PLAN
ION.

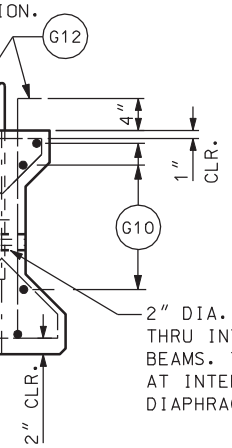


ON B-B

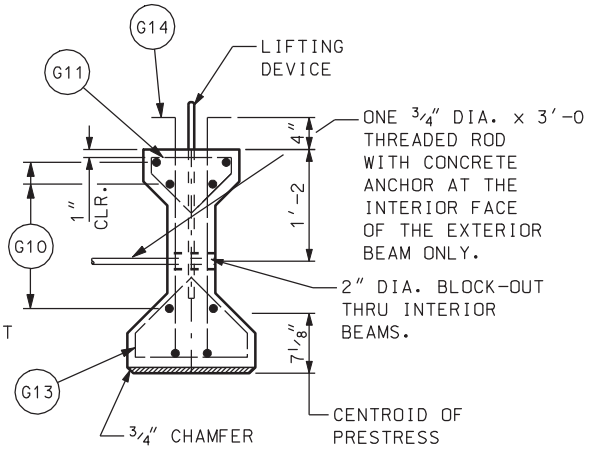


## SECTION C-C

(AT BENT END)

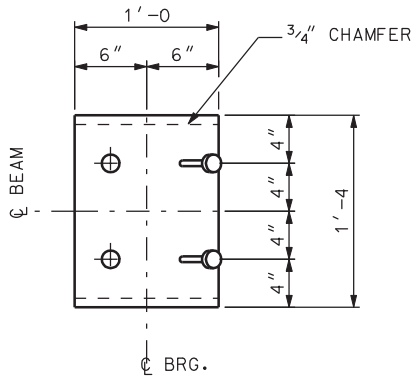


## BEARING PLATE DETAIL

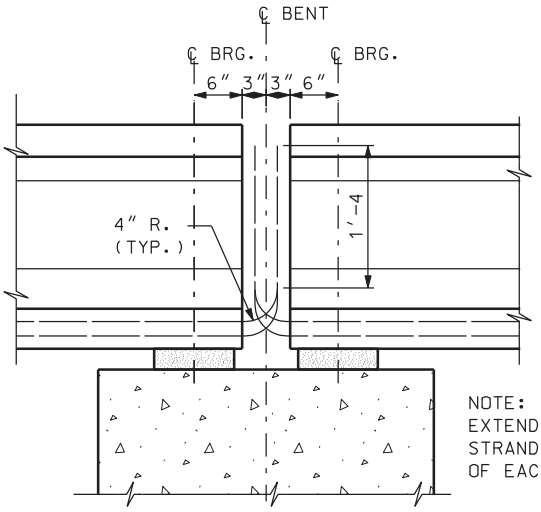


NOTE:
EXTEND 5 PRESTRESSING STRANDS FROM THE END OF EACH BEAM AS SHOWN

## BEAM DETAILS AT BENT

## GENERAL NOTES

1. UNLESS OTHERWISE SHOWN, ALL DIMENSIONS ARE OUT TO OUT OF BARS.
2. USE 1/2" DIAMETER PRESTRESSING STRANDS.
3. PLACE BEARING PLATES AND PADS PERPENDICULAR TO BEAM CENTER LINE.
4. USE COATED REINFORCING BARS CONFORMING TO AASHTO DESIGNATION M 31, GRADE 60.

## AASHTO TYPE I BEAM

FINAL PRESTRESSING FORCES
AFTER LOSSES = 320.2 kips
$f'_{ci}$ = 4,000
$f'_c$ = 5,000
4 EXTERIOR BEAMS REQUIRED
4 INTERIOR BEAMS REQUIRED

MIN. AREA PRESTRESSING STEEL = 1.99 SQ. IN.

REVISIONS

| NO. | DATE | BY | REMARKS |
|---|---|---|---|
| | | | |

UTAH DEPARTMENT OF TRANSPORTATION
SALT LAKE CITY, UTAH
STRUCTURES DIVISION

DESIGN MDR 12/04 CHECK GG 12/04
DRAWN LM 12/04 CHECK MDR 12/04
QUANT. MDR 12/04 CHECK LM 12/04

APPROVAL RECOMM. DATE SENIOR DESIGN ENGR.
APPROVED FOR USE BY UDOT DATE UDOT BRIDGE ENGR.

I-15; CORRIDOR IN UTAH COUNTY
100 EAST OVERPASS IN LEHI
BEAM DETAILS; SPANS 1 & 3

PROJECT NUMBER SP-15-6(52)241

UTAH
COUNTY

F-9W
DRG. NO.

SHT. 11 OF 21

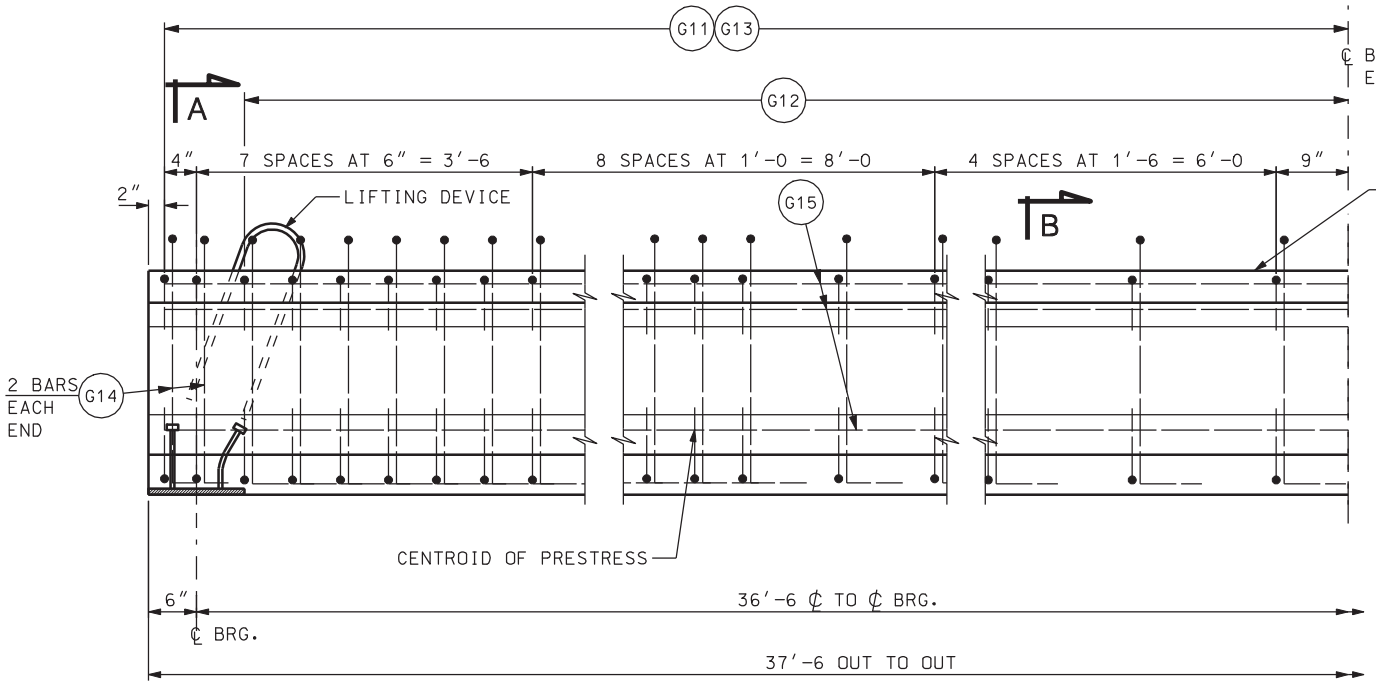


PARTIAL ELEVATION

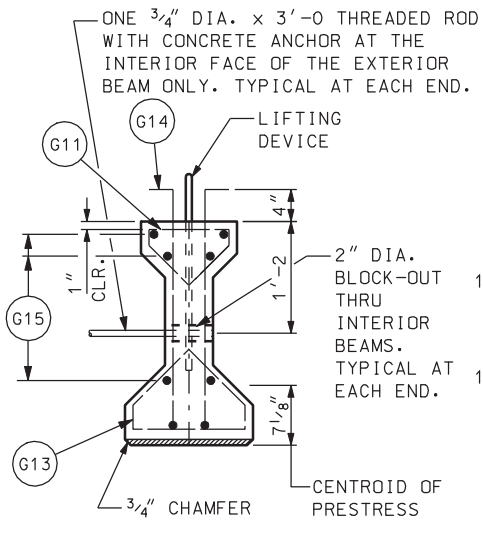


SECTION A-A

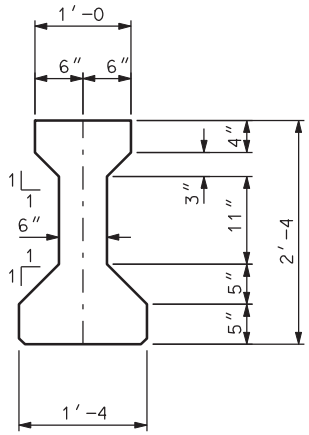


TYPICAL SECTION

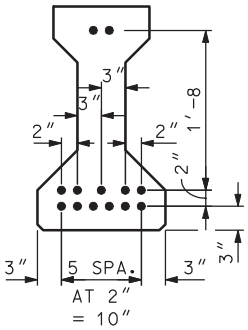


STRAND PATTERN

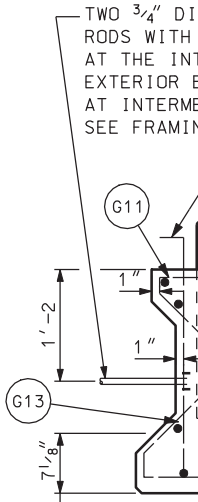


SECTIO

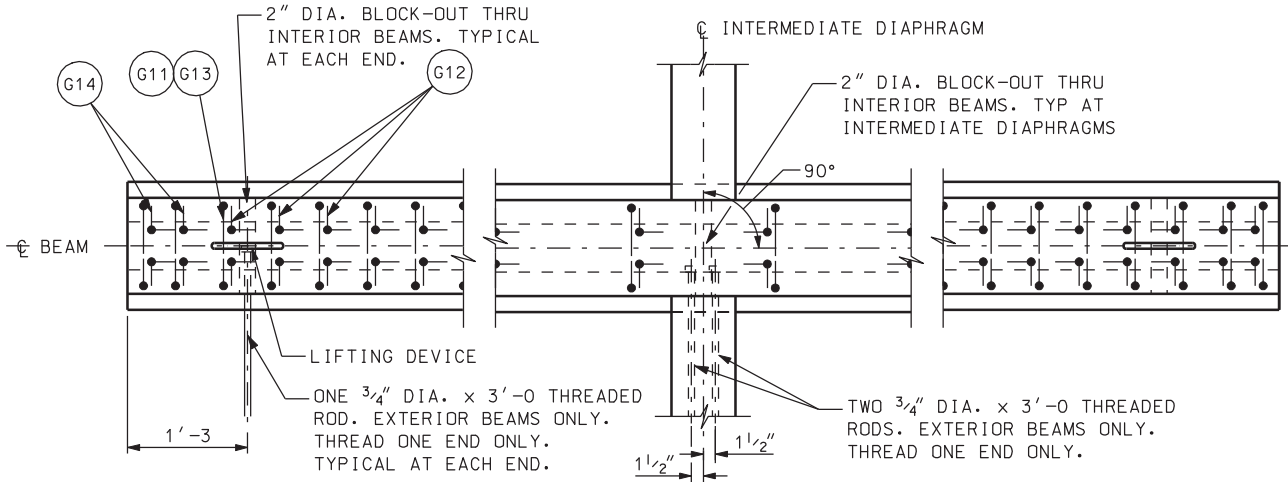


PARTIAL PLAN

DGN File: N:\Projects\4433.04\Sheet.Files\Structures\F-9W\4433.f-9w-12.beamdetail2.dgn
05-MAY-2005

EAM (SYMMETRICAL
XCEPT AS NOTED)

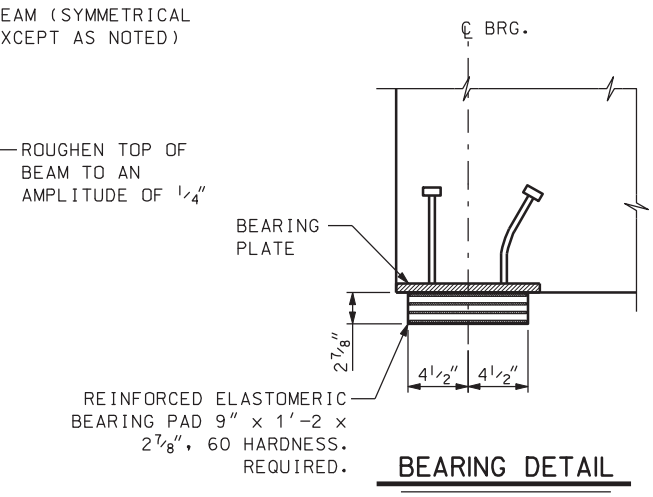


BEARING DETAIL

## REINFORCING STEEL SCHEDULE

| MARK | SIZE NO. | LENGTH | SKETCH |
|---|---|---|---|
| G 15 | 4 | 37'-2 | |
| G 11 | 5 | 2'-4 | 2", 7", 10", 1, 1 |
| G 12 | 5 | 4'-0 | 8", X, Y, 10", Z, 2'-6 |
| G 13 | 5 | 3'-4 | 3", 10", 1'-2, 1, 1 |
| G 14 | 5 | 3'-5 | 8", X, Y, 3", Z, 2'-6 |

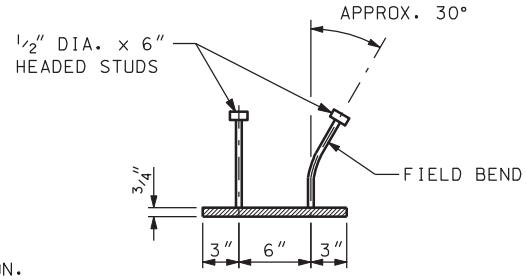


A. x 3'-0 THREADED
CONCRETE ANCHORS
TERIOR FACE OF THE
BEAMS ONLY. TYPICAL
EDIATE DIAPHRAGMS.
NG PLAN FOR LOCATION.

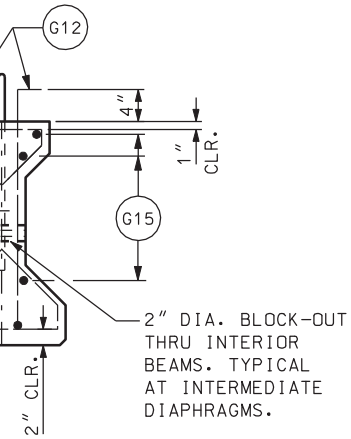


ON B-B

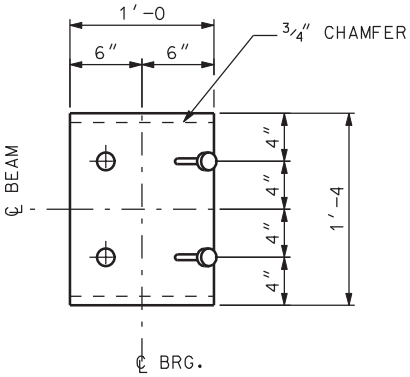


BEARING PLATE DETAIL

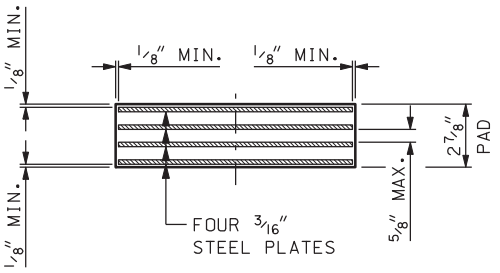


ELASTOMERIC BEARING PAD

## GENERAL NOTES

1. UNLESS OTHERWISE SHOWN, ALL DIMENSIONS ARE OUT TO OUT OF BARS.
2. USE 1/2" DIAMETER PRESTRESSING STRANDS.
3. PLACE BEARING PLATES AND PADS PERPENDICULAR TO BEAM CENTER LINE.
4. USE COATED REINFORCING BARS CONFORMING TO AASHTO DESIGNATION M 31, GRADE 60.

M

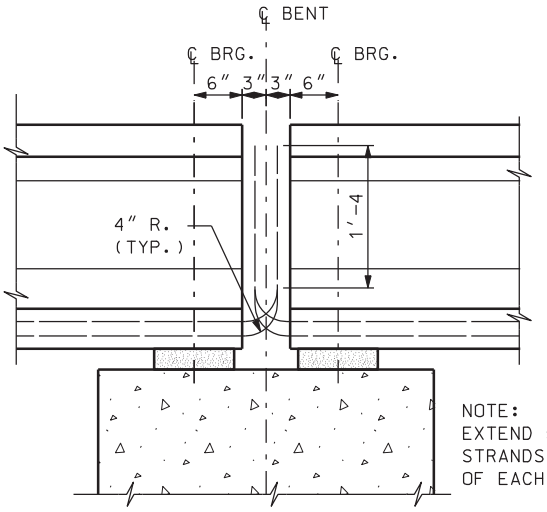


NOTE:
EXTEND 5 PRESTRESSING STRANDS FROM THE END OF EACH BEAM AS SHOWN

BEAM DETAILS AT BENT

## AASHTO TYPE I BEAM

FINAL PRESTRESSING FORCES
AFTER LOSSES = 320.3 kips
$f'_{ci}$ = 4,000
$f'_c$ = 5,000
2 EXTERIOR BEAMS REQUIRED
2 INTERIOR BEAMS REQUIRED

MIN. AREA PRESTRESSING STEEL = 1.99 SQ. IN.

| NO. | DATE | BY | REMARKS |
|---|---|---|---|

REVISIONS

UTAH DEPARTMENT OF TRANSPORTATION
SALT LAKE CITY, UTAH
STRUCTURES DIVISION

DESIGN MDR 12/04 CHECK GG 12/04
DRAWN LM 12/04 CHECK MDR 12/04
QUANT. MDR 12/04 CHECK LM 12/04

APPROVAL RECOMM. DATE SENIOR DESIGN ENGR.
APPROVED FOR USE BY UDOT DATE UDOT BRIDGE ENGR.

I-15; CORRIDOR IN UTAH COUNTY
100 EAST OVERPASS IN LEHI
BEAM DETAILS; SPAN 2

PROJECT NUMBER SP-15-6(52)241

UTAH
COUNTY

F-9W
DRG. NO.

SHT. 12 OF 21

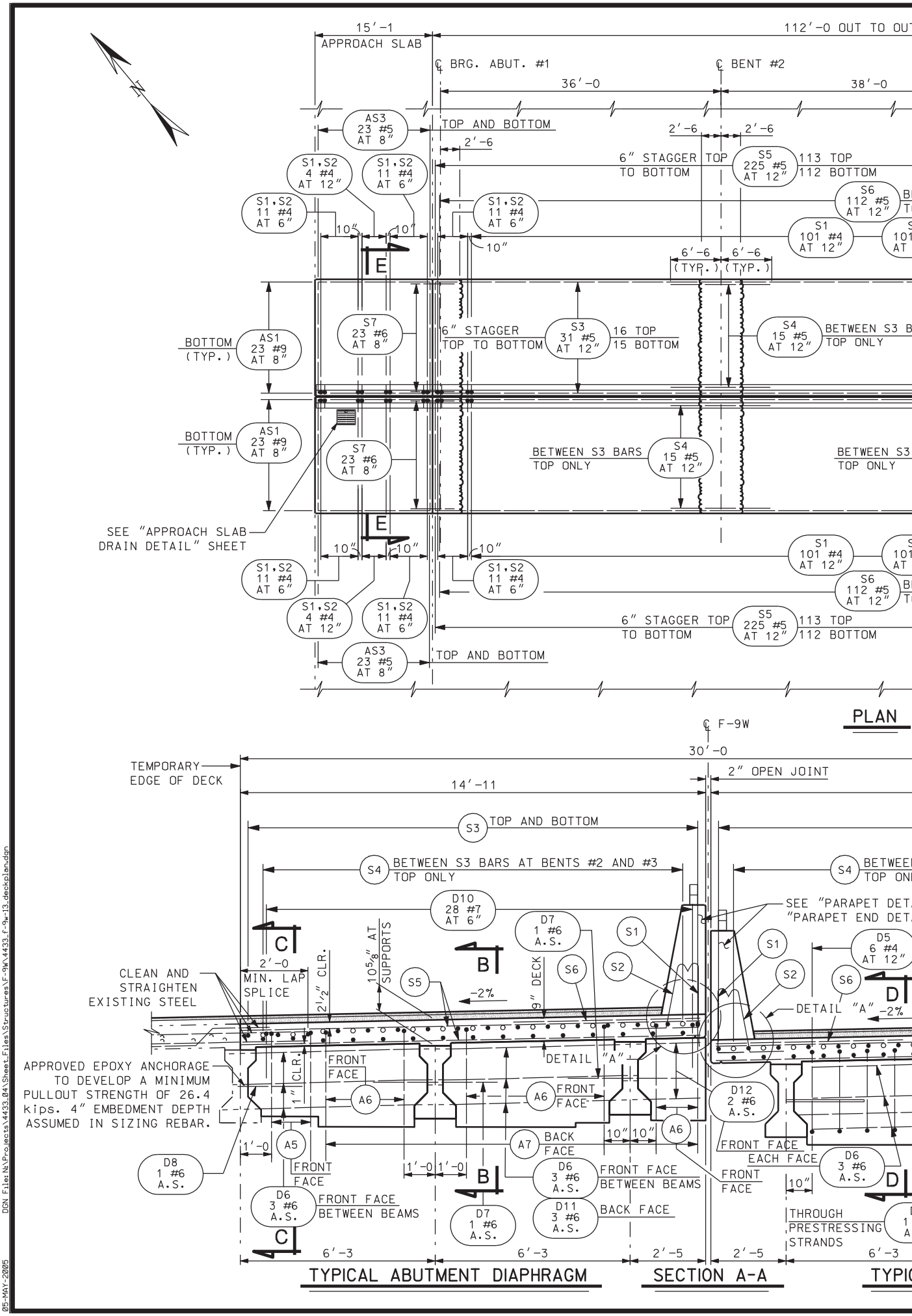


DGN File: N:\Projects\4433.04\Sheet.Files\Structures\F-9W\4433.f-9w-13.deckplan.dgn

05-MAY-2005

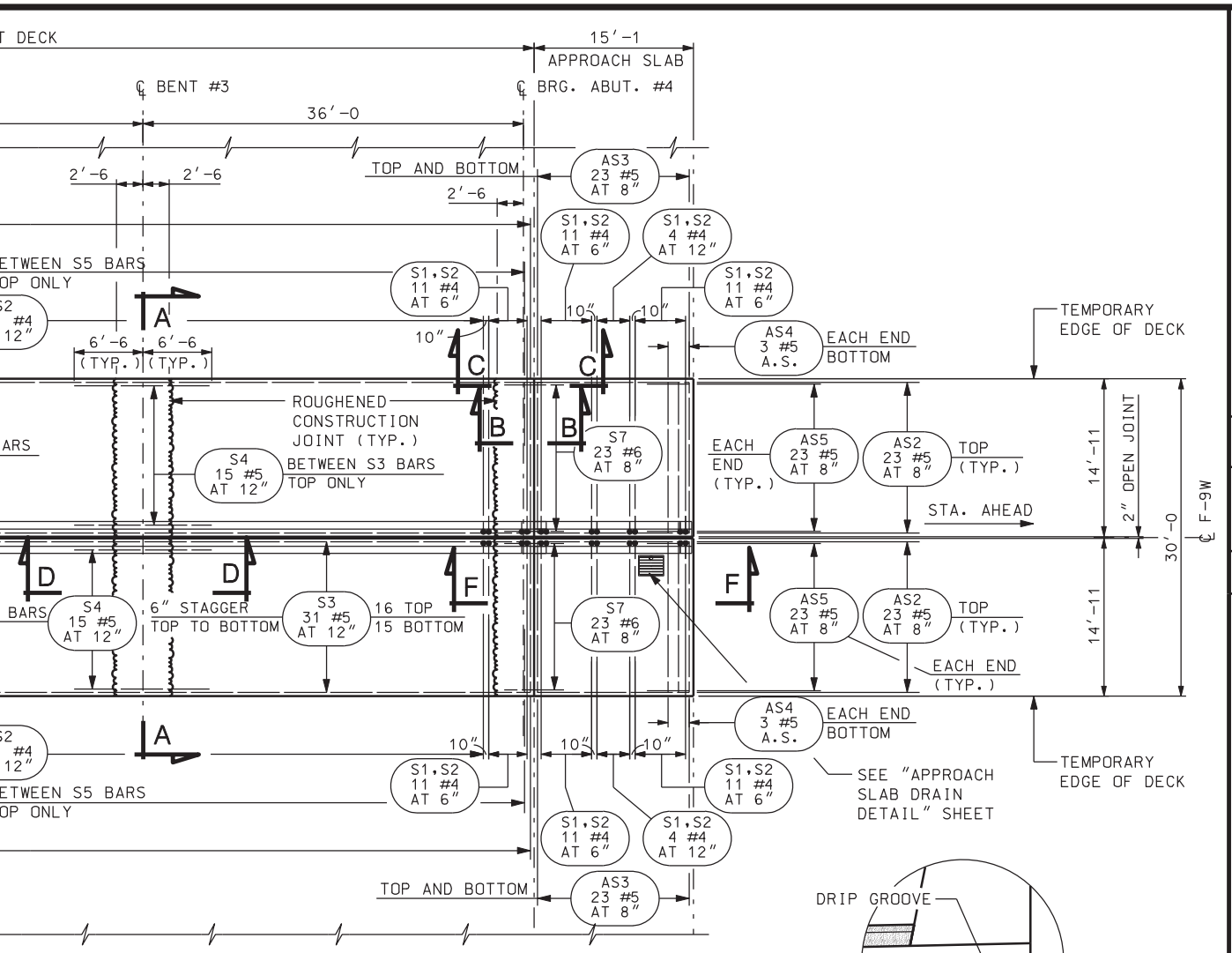


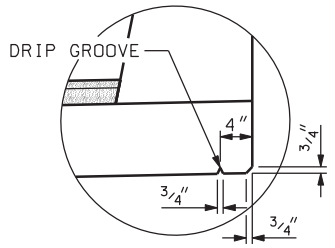


DETAIL "A"

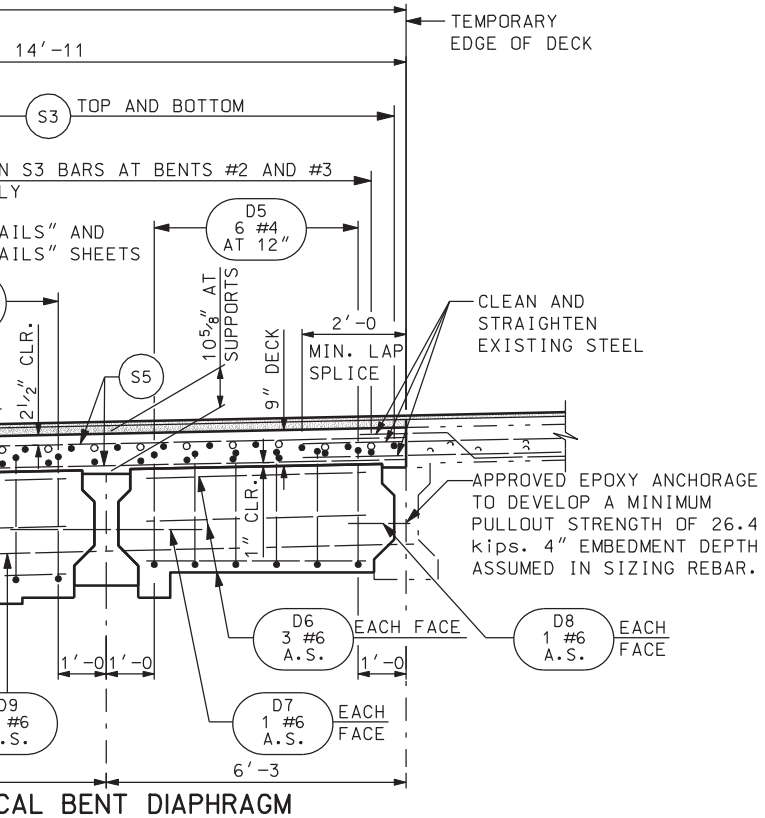


CAL BENT DIAPHRAGM

## NOTES:

1. STAY-IN-PLACE FORMS ARE NOT PERMITTED.
2. SEE "DECK & APPROACH SLAB DETAILS" SHEET FOR SECTIONS B-B, C-C, D-D, E-E AND F-F.
3. BAR SPACING IS THE MAXIMUM SPACING. SPACING IS ROUNDED TO THE NEAREST INCH.

## QUANTITIES

| | |
|---|---|
| STRUCTURAL CONCRETE | |
| DECK AND DIAPHRAGMS - NORTHBOUND | 63.3 CU. YDS. |
| DECK AND DIAPHRAGMS - SOUTHBOUND | 63.3 CU. YDS. |
| APPROACH SLABS - NORTHBOUND | 18.3 CU. YDS. |
| APPROACH SLABS - SOUTHBOUND | 18.3 CU. YDS. |
| TOTAL | 163.2 CU. YDS. |

REVISIONS

| NO. | DATE | BY | REMARKS |
|---|---|---|---|
| | | | |

UTAH DEPARTMENT OF TRANSPORTATION
SALT LAKE CITY, UTAH
STRUCTURES DIVISION

DESIGN MDR 12/04 CHECK GG 12/04
DRAWN LM 12/04 CHECK MDR 12/04
QUANT. MDR 12/04 CHECK LM 12/04

APPROVAL RECOMM. DATE SENIOR DESIGN ENGR.
APPROVED FOR USE BY UDOT DATE UDOT BRIDGE ENGR.

I-15; CORRIDOR IN UTAH COUNTY
100 EAST OVERPASS IN LEHI
DECK PLAN AND SECTION

PROJECT NUMBER SP-15-6(52)241

UTAH
COUNTY

F-9W
DRG. NO.

SHT. 13 OF 21

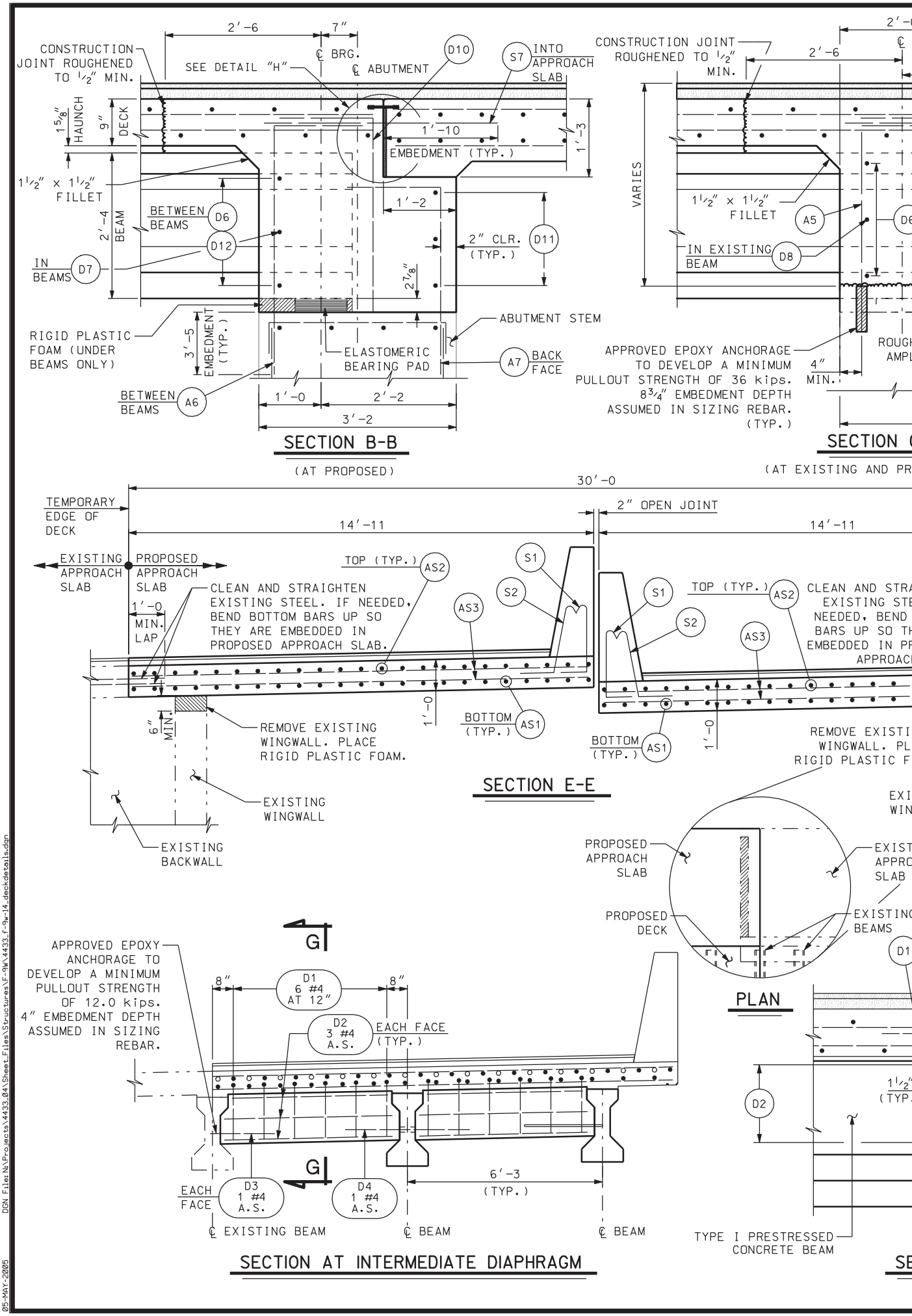


DGN File: N:\Projects\4433.04\Sheet.Files\Structures\F-9W\4433.f-9w-14.deckdetails.dgn

05-MAY-2005

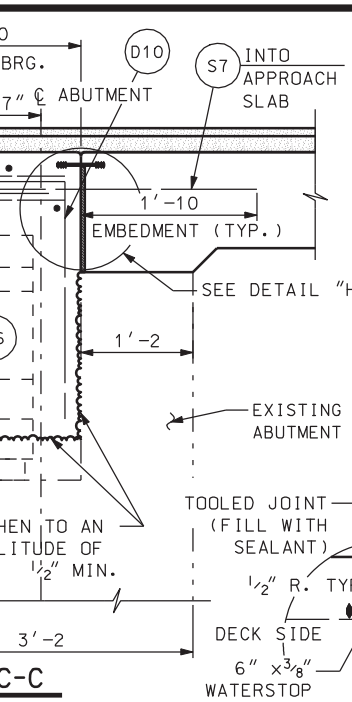


C-C

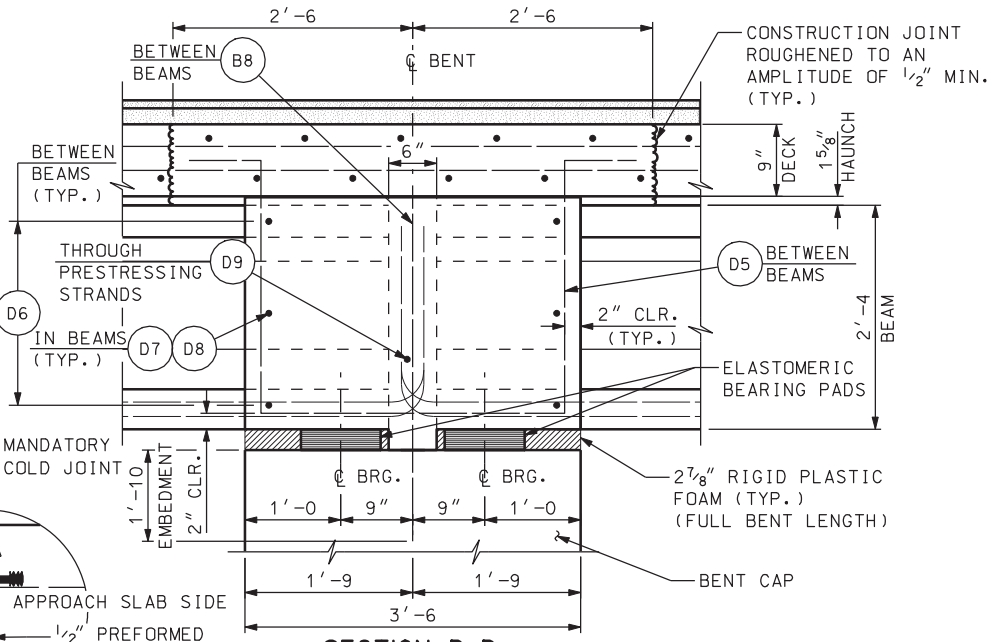


SECTION D-D

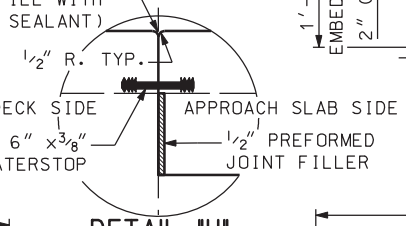


DETAIL "H"

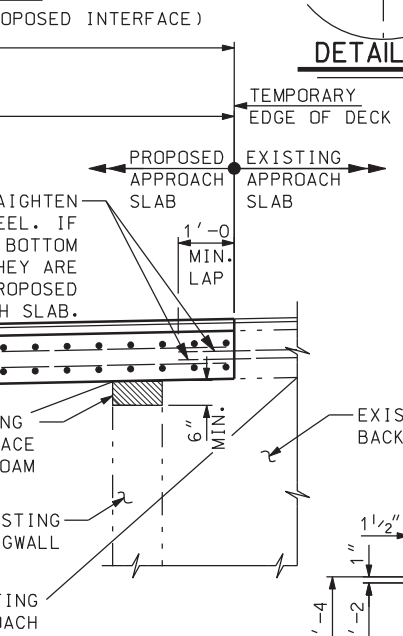


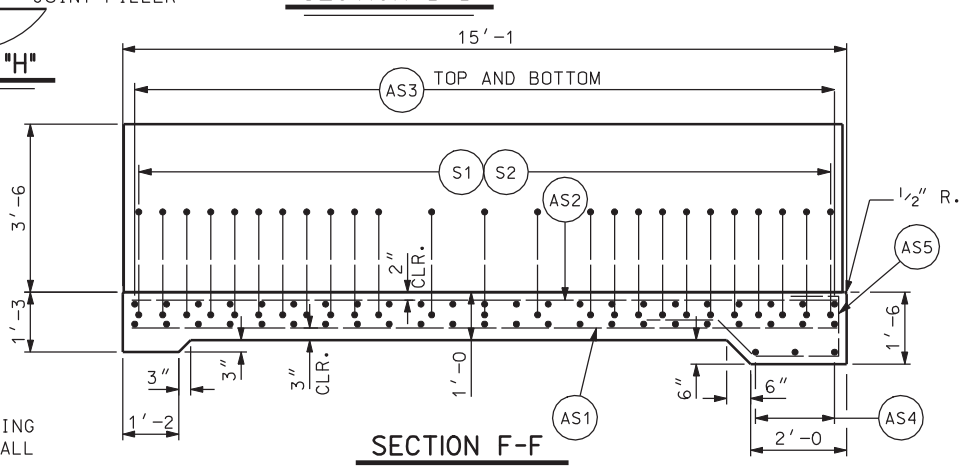


SECTION F-F

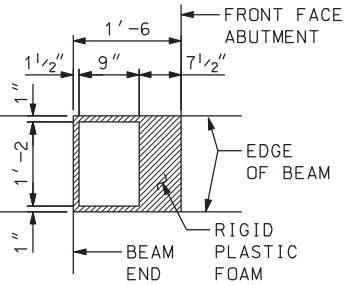


BEARING PAD DETAIL AT ABUTMENTS

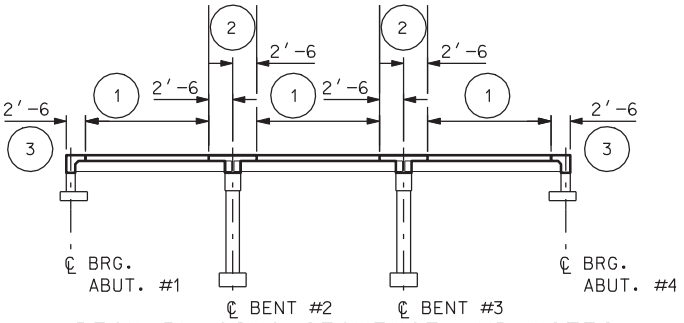


DECK PLACING SEQUENCE AND NOTES

1. ALLOW A MINIMUM OF 72 HOURS CURE TIME AFTER THE FINISH OF A POUR BEFORE STARTING THE NEXT POUR.
2. ALTERNATE POUR SEQUENCES MUST BE APPROVED BY THE ENGINEER.

## NOTES:

1. SEE "DECK PLAN AND SECTION" SHEET FOR LOCATION OF SECTIONS AND DETAILS.
2. SEE "PARAPET DETAILS", "PARAPET END DETAILS" AND "BENT DETAILS" SHEETS FOR ADDITIONAL NOTES AND DETAILS.
3. BAR SPACING IS THE MAXIMUM SPACING. SPACING IS ROUNDED TO THE NEAREST INCH.
4. SEE "FRAMING PLAN" SHEET FOR INTERMEDIATE DIAPHRAGM LOCATIONS.
5. PLACE ALL EPOXY ANCHORAGES INSIDE OF EXISTING REBAR.

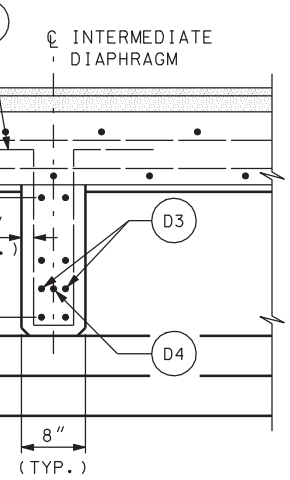


ECTION G-G

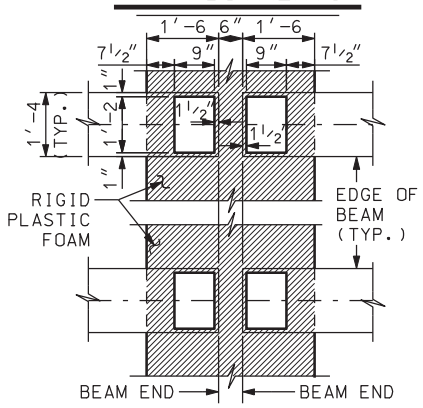


BEARING PAD DETAIL AT BENTS

| NO. | DATE | BY | REMARKS |
|---|---|---|---|
| | | | |

REVISIONS

UTAH DEPARTMENT OF TRANSPORTATION
SALT LAKE CITY, UTAH
STRUCTURES DIVISION

DESIGN MDR 12/04 CHECK GG 12/04
DRAWN LM 12/04 CHECK MDR 12/04
QUANT. MDR 12/04 CHECK LM 12/04

APPROVAL RECOMM. DATE SENIOR DESIGN ENGR.
APPROVED FOR USE BY UDOT DATE UDOT BRIDGE ENGR.

I-15; CORRIDOR IN UTAH COUNTY
100 EAST OVERPASS IN LEHI
DECK & APPROACH SLAB DETAILS

PROJECT NUMBER SP-15-6(52)241

UTAH
COUNTY

F-9W
DRG. NO.

SHT. 14 OF 21

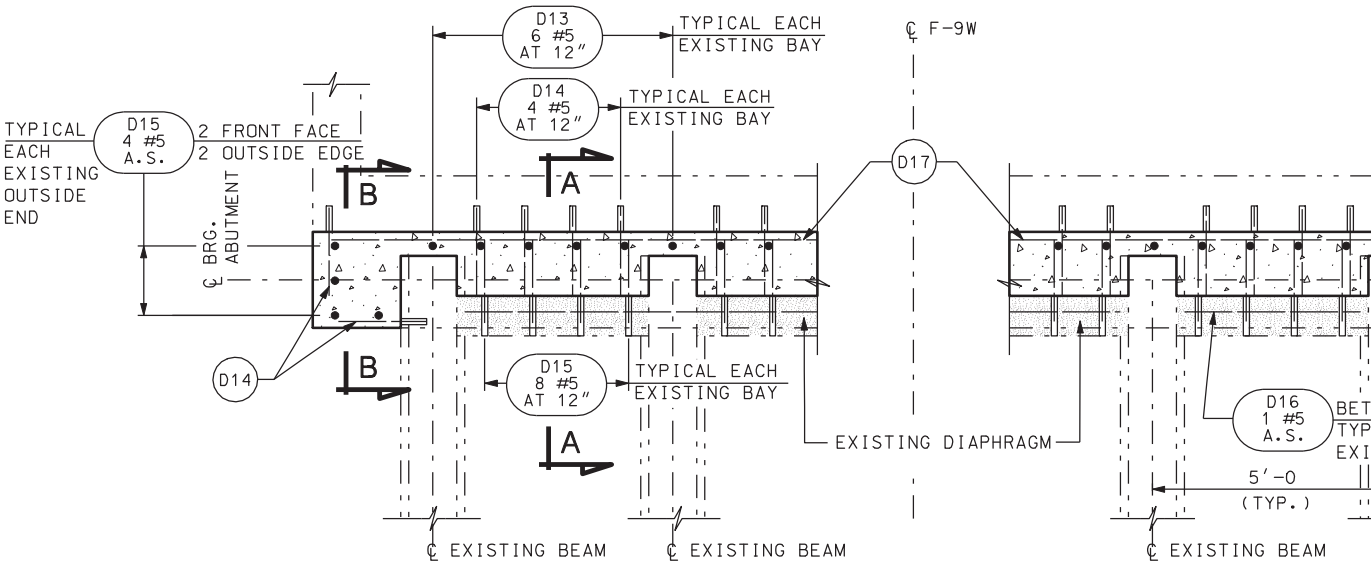


PLAN AT ABUTMENT

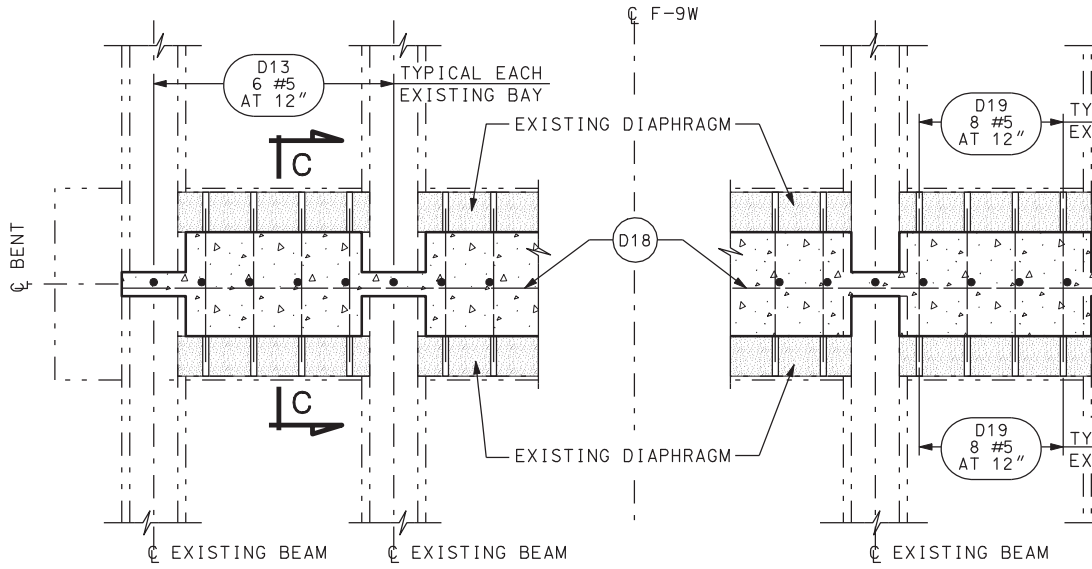


PLAN AT BENT

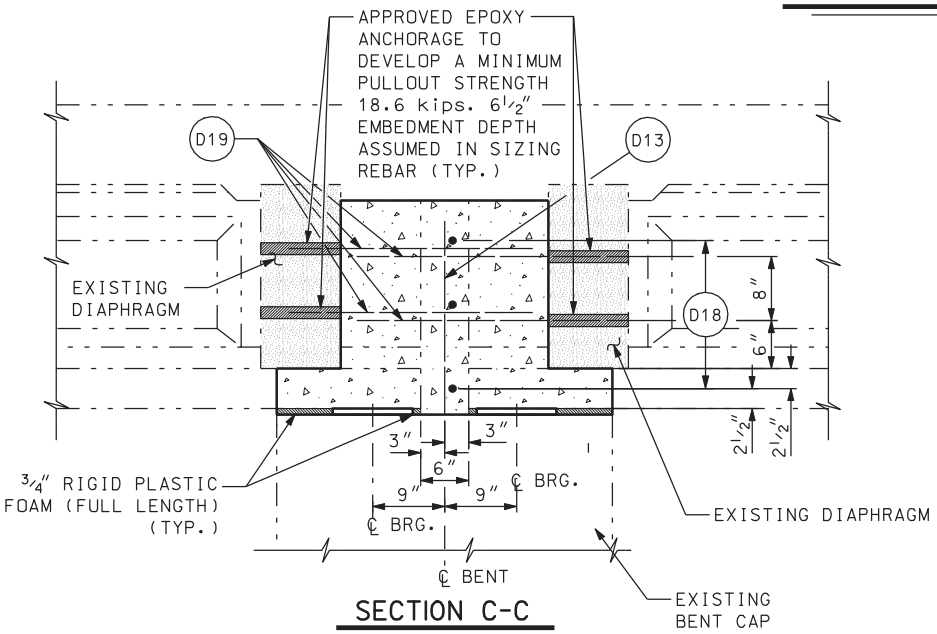


SECTION C-C

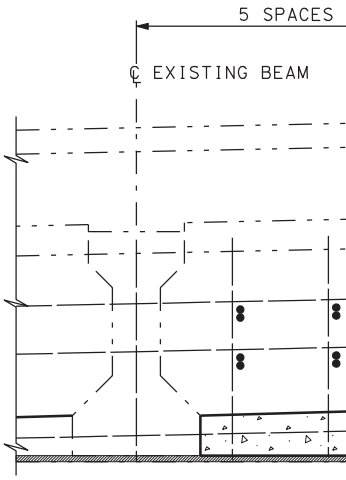


TYPICAL EXISTING E

DGN File:N:\Projects\4433.04\Sheet.Files\Structures\F-9W\4433.f-9w-15.exmodification.dgn
05-MAY-2005

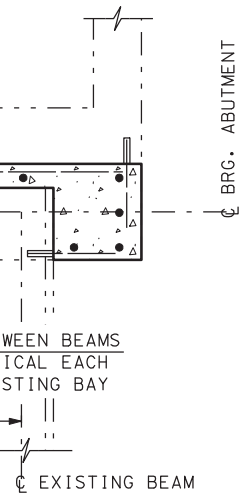


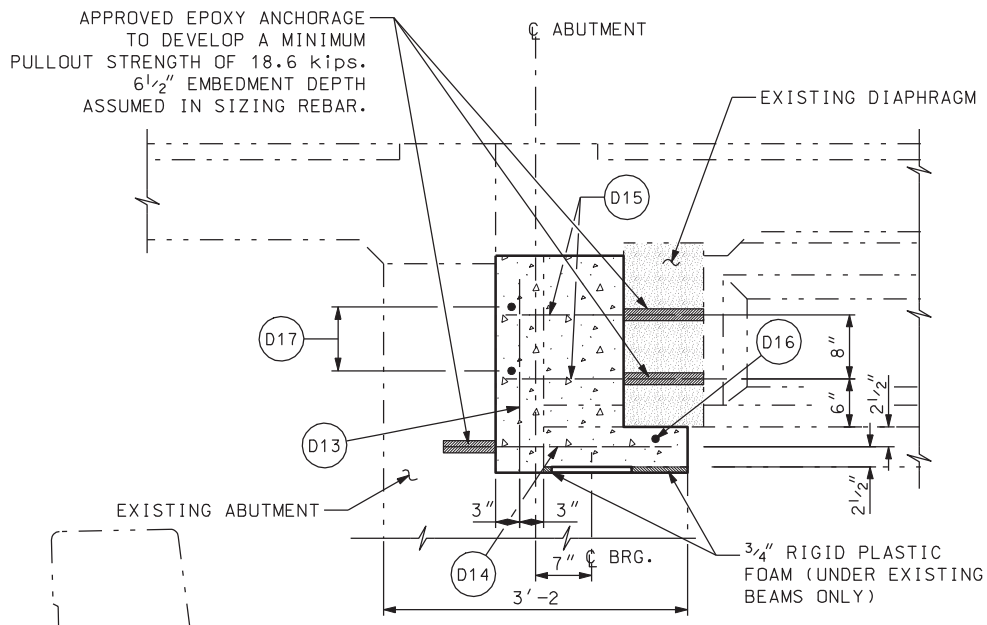


SECTION A-A

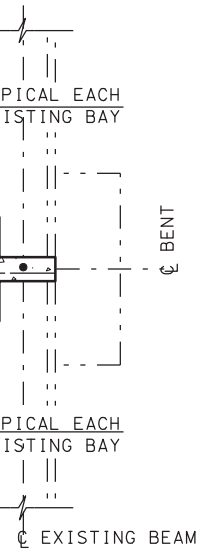


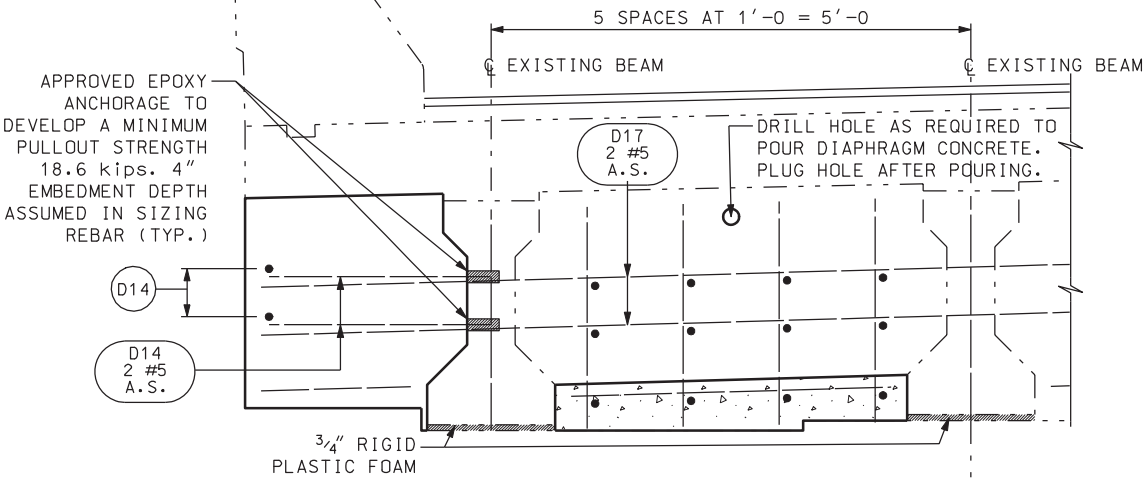


TYPICAL EXISTING INTERIOR BAY ELEVATION AT ABUTMENT

TYPICAL EXISTING INTERIOR BAY ELEVATION AT ABUTMENT

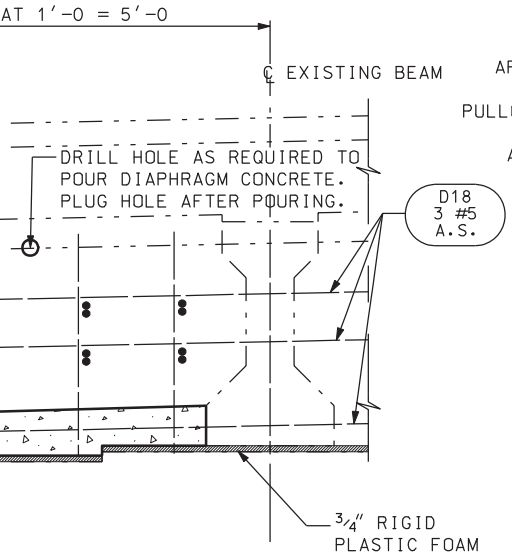


BAY ELEVATION AT BENT

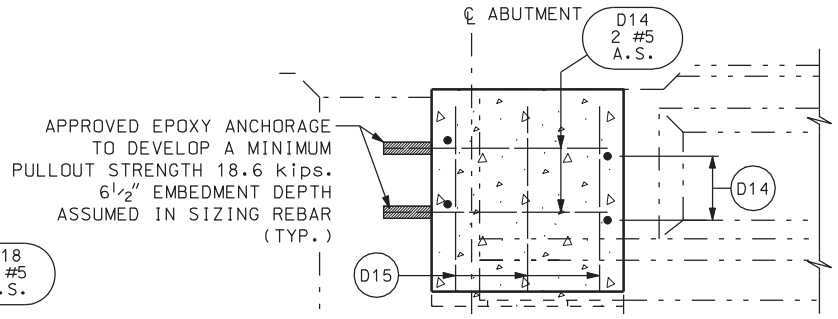


SECTION B-B

## QUANTITIES

| | |
|---|---|
| STRUCTURAL CONCRETE | |
| EXISTING DIAPHRAGM - NORTHBOUND ABUTMENTS | 11.5 CU. YDS. |
| EXISTING DIAPHRAGM - SOUTHBOUND ABUTMENTS | 11.5 CU. YDS. |
| EXISTING DIAPHRAGM - NORTHBOUND BENTS | 17.3 CU. YDS. |
| EXISTING DIAPHRAGM - SOUTHBOUND BENTS | 17.3 CU. YDS. |
| TOTAL | 57.6 CU. YDS. |

| NO. | DATE | BY | REMARKS |
|---|---|---|---|
| | | | |

REVISIONS

UTAH DEPARTMENT OF TRANSPORTATION
SALT LAKE CITY, UTAH
STRUCTURES DIVISION

DESIGN MDR 12/04 CHECK GG 12/04
DRAWN LM 12/04 CHECK MDR 12/04
QUANT. MDR 12/04 CHECK LM 12/04

APPROVAL RECOMM. DATE SENIOR DESIGN ENGR.
APPROVED FOR USE BY UDOT DATE UDOT BRIDGE ENGR.

I-15; CORRIDOR IN UTAH COUNTY
100 EAST OVERPASS IN LEHI
EXISTING DIAPHRAGM MODIFICATIONS

PROJECT NUMBER SP-15-6(52)241

UTAH
COUNTY

F-9W
DRG. NO.

SHT. 15 OF 21

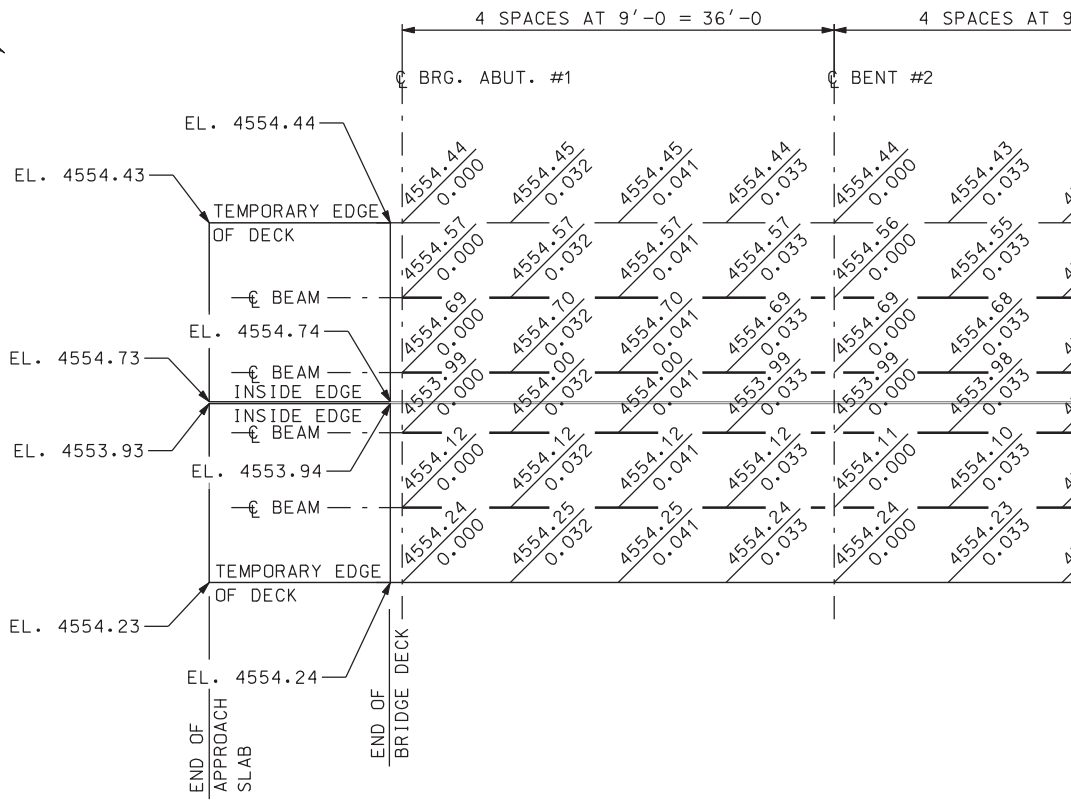


SCREED EL

DGN File:N:\Projects\4433.04\Sheet.Files\Structures\F-9W\4433.f-9w-16.screed.dgn

05-MAY-2005

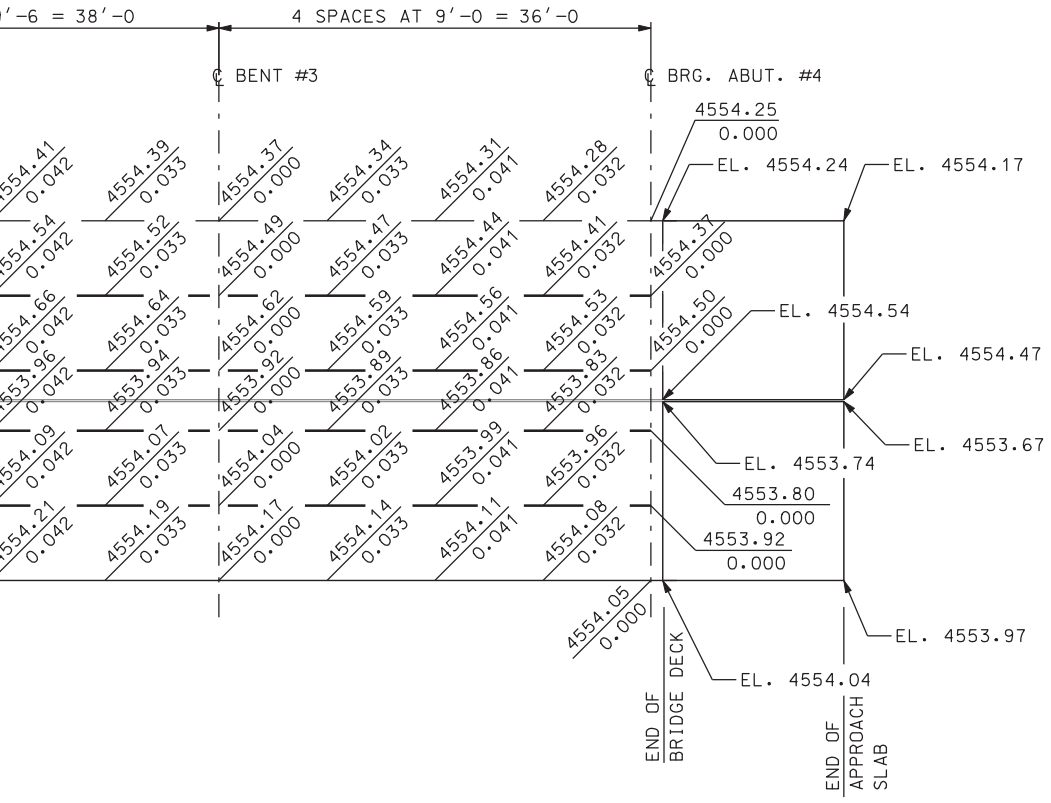


EVATIONS

## NOTES:

1. FIGURES ABOVE THE LINE ARE TOP OF CONCRETE ELEVATIONS. FIGURES BELOW THE LINE ARE DEAD LOAD DEFLECTIONS OF THE DECK AND ARE TO BE ADDED TO THE TOP OF CONCRETE ELEVATIONS TO OBTAIN SCREED ELEVATIONS.

2. ALL DIMENSIONS SHOWN ARE IN FEET AND INCHES. ALL ELEVATIONS AND DEAD LOAD DEFLECTIONS ARE SHOWN IN FEET.

| NO. | DATE | BY | REMARKS |
|---|---|---|---|
| | | | |

REVISIONS

UTAH DEPARTMENT OF TRANSPORTATION
SALT LAKE CITY, UTAH
STRUCTURES DIVISION

DESIGN MDR 12/04 CHECK GG 12/04
DRAWN LM 12/04 CHECK MDR 12/04
QUANT. CHECK

APPROVAL RECOMM. DATE SENIOR DESIGN ENGR.
APPROVED FOR USE BY UDOT DATE UDOT BRIDGE ENGR.

I-15: CORRIDOR IN UTAH COUNTY
100 EAST OVERPASS IN LEHI
SCREED ELEVATIONS

PROJECT NUMBER SP-15-6(52)241

UTAH
COUNTY

F-9W
DRG. NO.

SHT. 16 OF 21

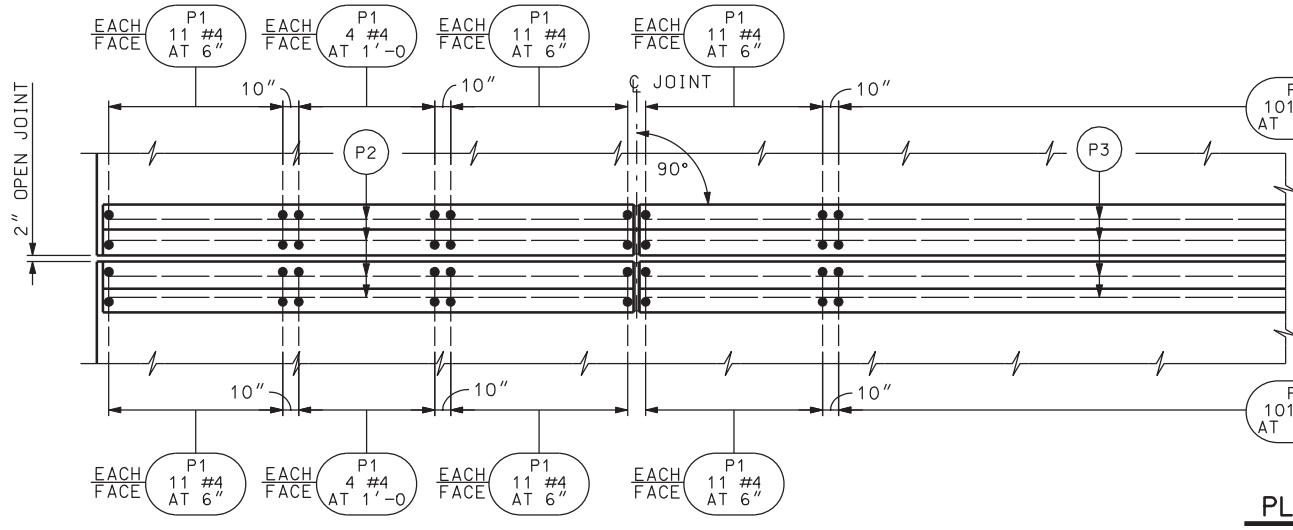


PL

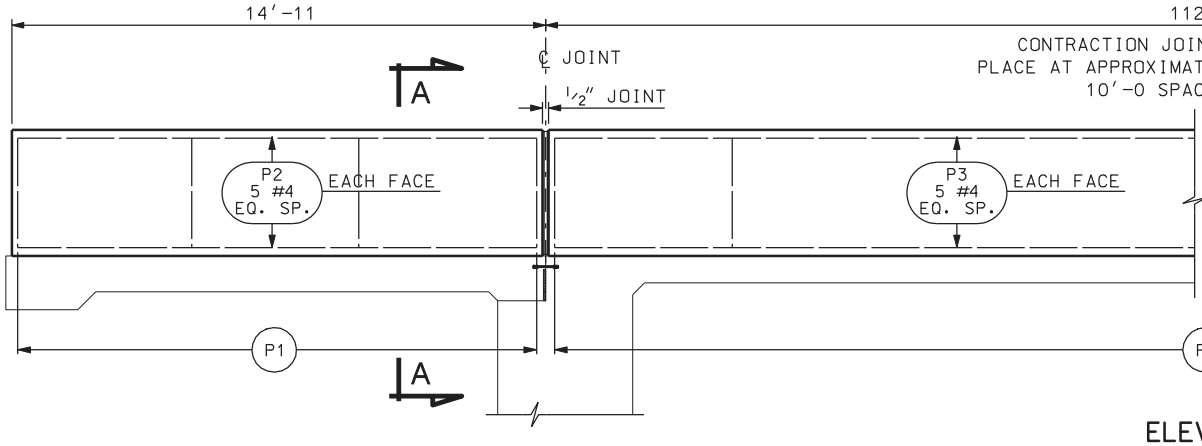


ELEV

(ALL DIMENSIONS SHOWN

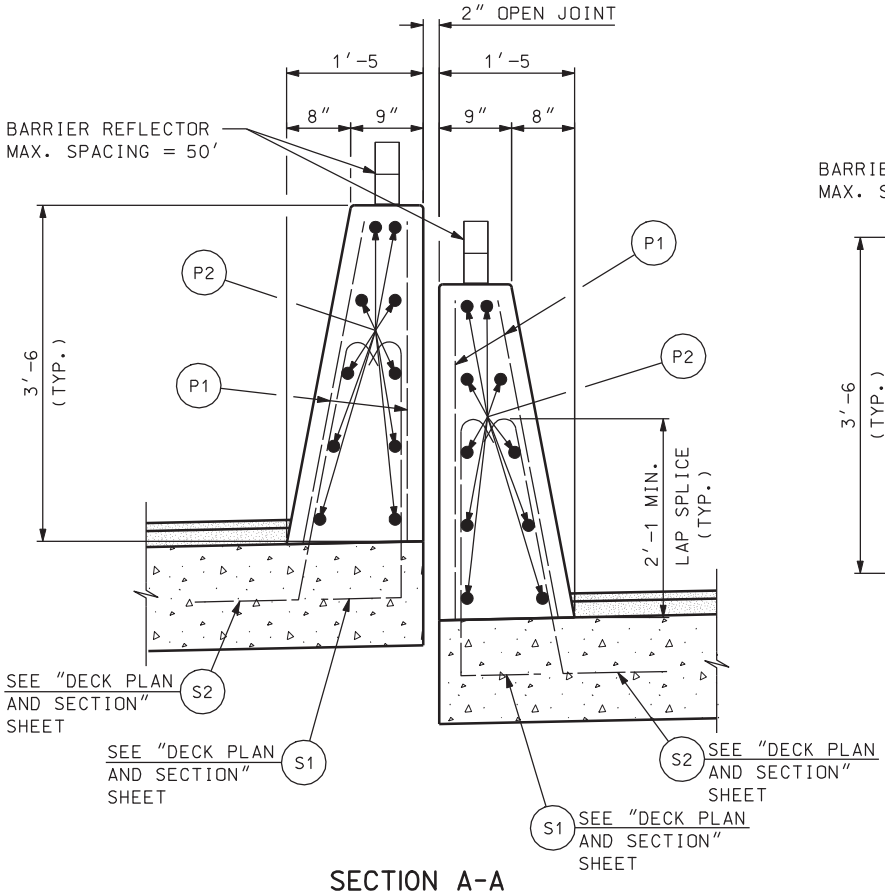


SECTION A-A

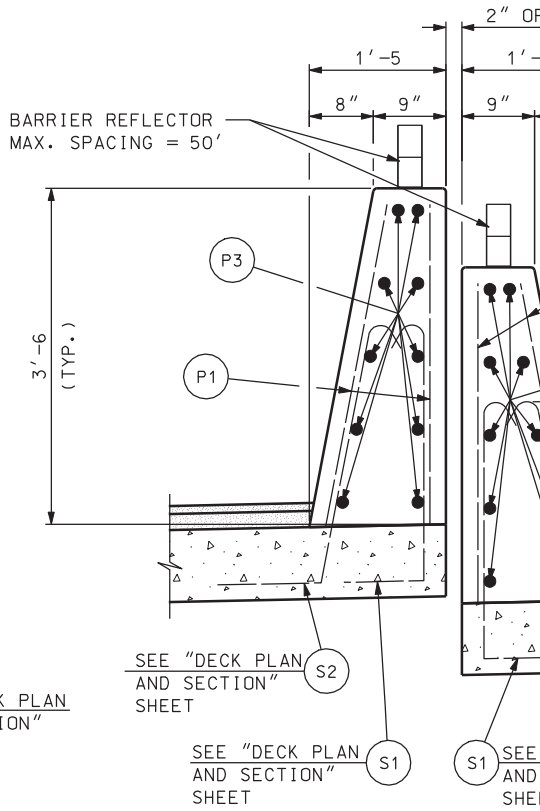


SECTION B

DGN File: N:\Projects\4433.04\Sheet.Files\Structures\F-9W\4433.f-9w-17_parapet.dgn

05-MAY-2005

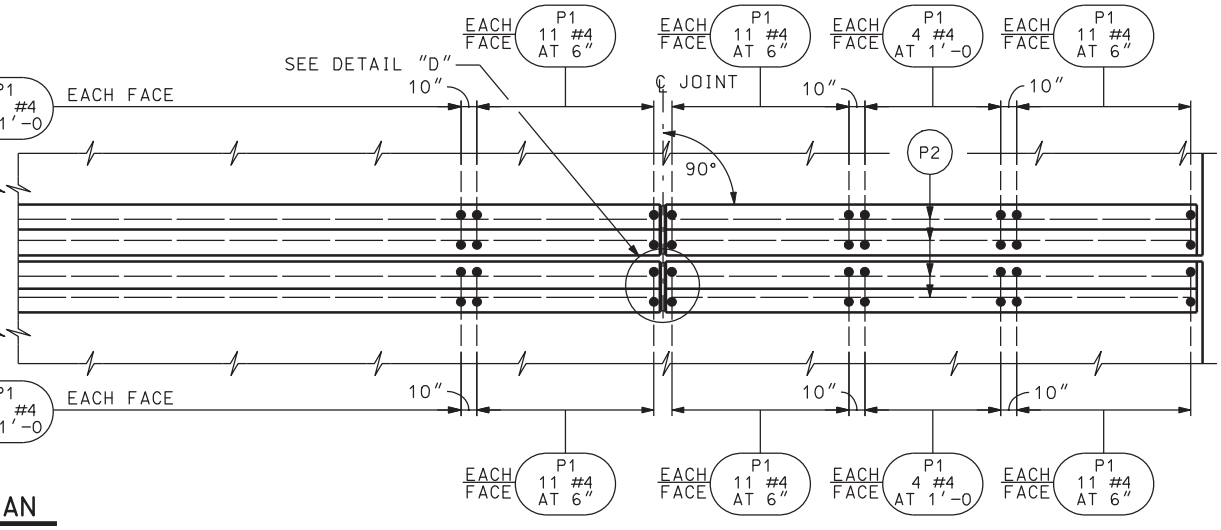


AN

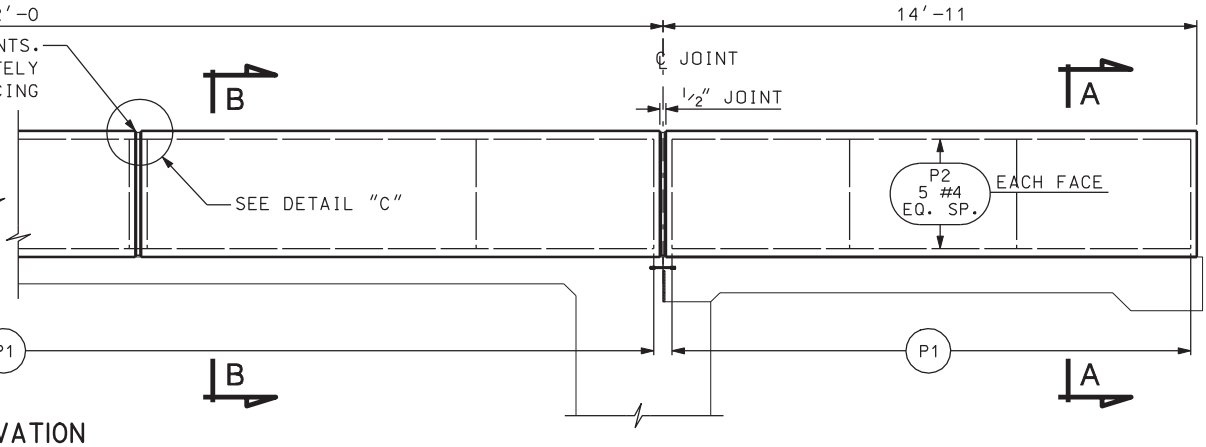


VATION

(ARE ALONG EDGE OF DECK)

PEN JOINT

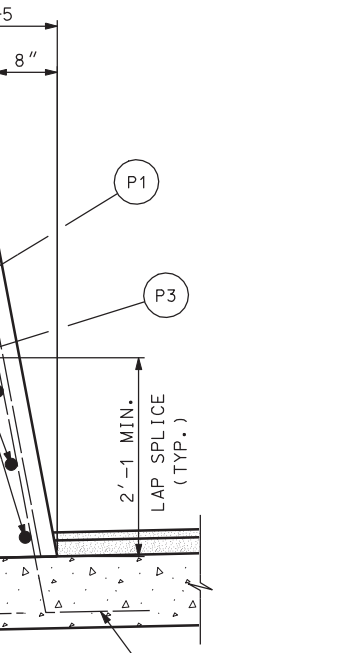


B-B

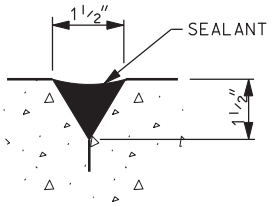


DETAIL "C"

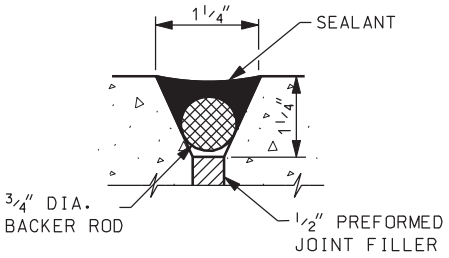


DETAIL "D"

## NOTES

1. ALTERNATE ALL REINFORCING STEEL SPLICES.
2. PROVIDE 2" MIN. COVER TO REINFORCING STEEL UNLESS NOTED OTHERWISE.
3. PLACE CONTRACTION JOINT ON SIDES AND TOP OF PARAPET.
4. EXTEND SEALANT FROM DECK TO TOP OF PARAPET ON THE INSIDE PARAPET FACE AND ACROSS TOP OF PARAPET.
5. BAR SPACING IS THE MAXIMUM SPACING. SPACING IS ROUNDED TO THE NEAREST INCH.

| QUANTITIES | |
|---|---|
| STRUCTURAL CONCRETE | |
| PARAPETS - NORTHBOUND | 19.9 CU. YDS. |
| PARAPETS - SOUTHBOUND | 19.9 CU. YDS. |
| TOTAL | 39.8 CU. YDS. |

| NO. | DATE | BY | REMARKS |
|---|---|---|---|
| | | | |

REVISIONS

UTAH DEPARTMENT OF TRANSPORTATION
SALT LAKE CITY, UTAH
STRUCTURES DIVISION

DESIGN MDR 12/04 CHECK GG 12/04
DRAWN LM 12/04 CHECK MDR 12/04
QUANT. MDR 12/04 CHECK LM 12/04

APPROVAL RECOMM. DATE SENIOR DESIGN ENGR.
APPROVED FOR USE BY UDOT DATE UDOT BRIDGE ENGR.

I-15: CORRIDOR IN UTAH COUNTY
100 EAST OVERPASS IN LEHI
PARAPET DETAILS

PROJECT NUMBER SP-15-6(52)241

UTAH
COUNTY

F-9W
DRG. NO.

SHT. 17 OF 21

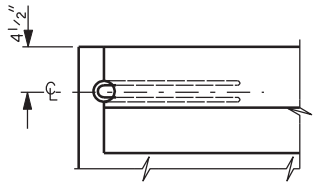


PLAN

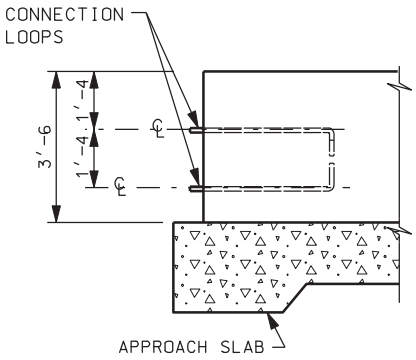


ELEVATION

STANDARD END DETAILS

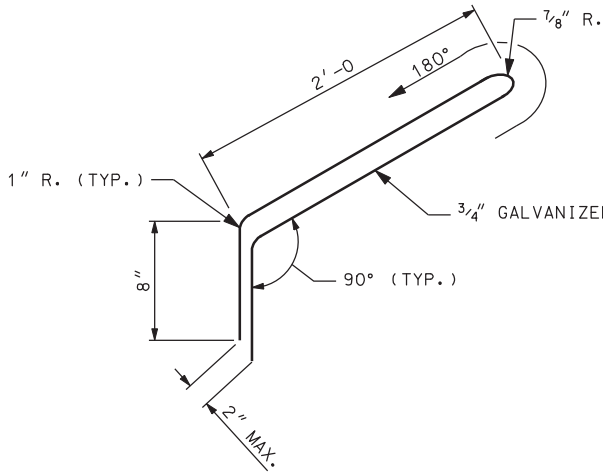


CONNECTION LOOP DETAI

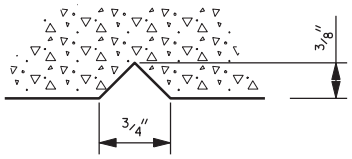


TYPICAL SECTION

THRU STRUCTURE NUMBER

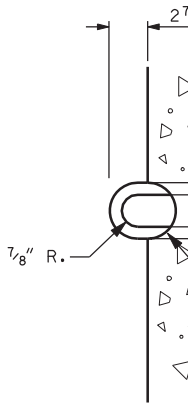


CON

DGN File:N:\Projects\4433.04\Sheet.Files\Structures\F-9W\4433.f-9w-18.parapend.dgn
05-MAY-2005

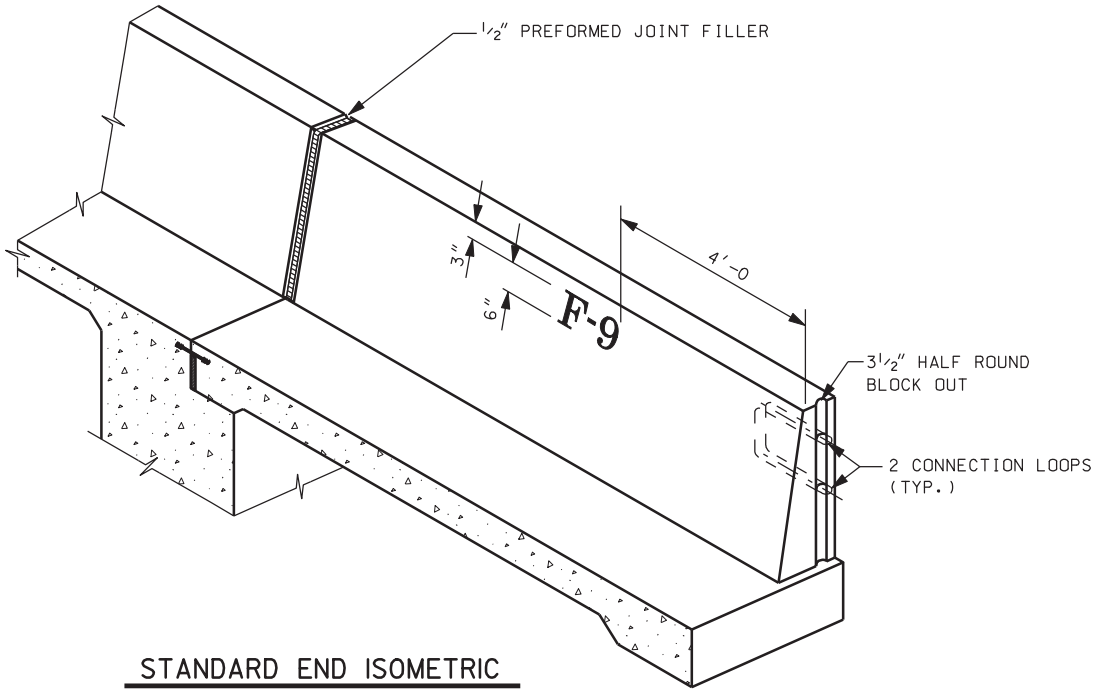


STANDARD END ISOMETRIC

D STEEL BAR

L

/8"

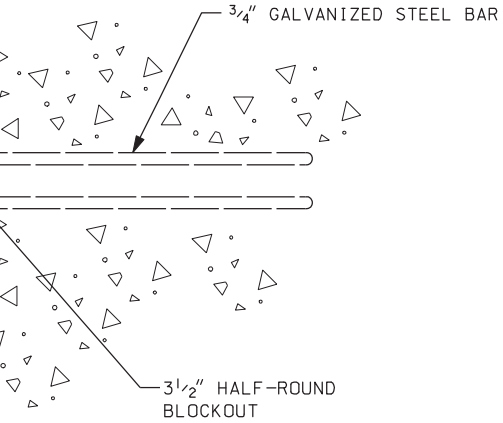


NECTION BAR END DETAIL

## NOTES:

1. INSTALL CONNECTION LOOPS AT ALL PARAPET ENDS.
2. CONNECTION LOOPS NOT INCLUDED IN REINFORCING STEEL SCHEDULE.

| NO. | DATE | BY | REMARKS |
|---|---|---|---|

REVISIONS

UTAH DEPARTMENT OF TRANSPORTATION
SALT LAKE CITY, UTAH
STRUCTURES DIVISION

DESIGN MDR 12/04 CHECK GG 12/04
DRAWN LM 12/04 CHECK MDR 12/04
QUANT. CHECK

APPROVAL RECOMM. DATE SENIOR DESIGN ENGR.
APPROVED FOR USE BY UDOT DATE UDOT BRIDGE ENGR.

I-15: CORRIDOR IN UTAH COUNTY
100 EAST OVERPASS IN LEHI
PARAPET END DETAILS

PROJECT NUMBER SP-15-6(52)241

UTAH
COUNTY

F-9W
DRG. NO.

SHT. 18 OF 21

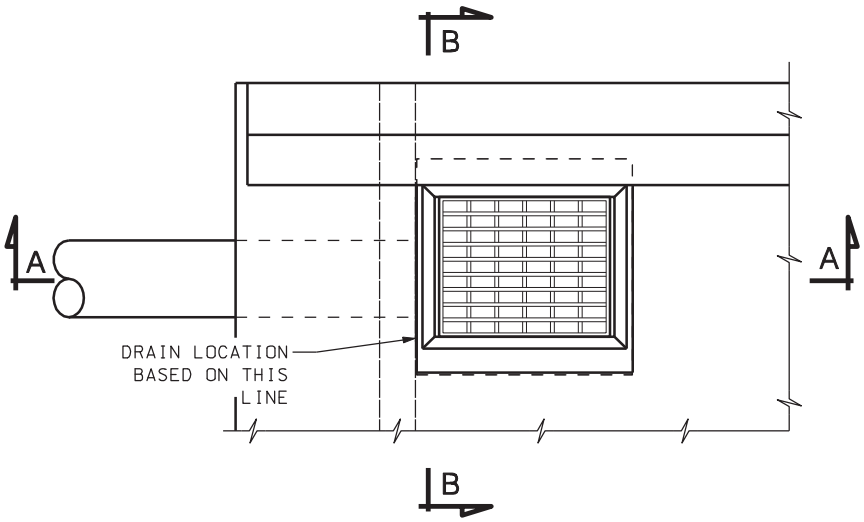


TYPICAL PLAN

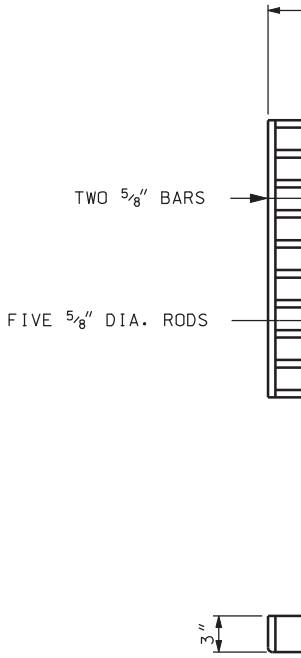


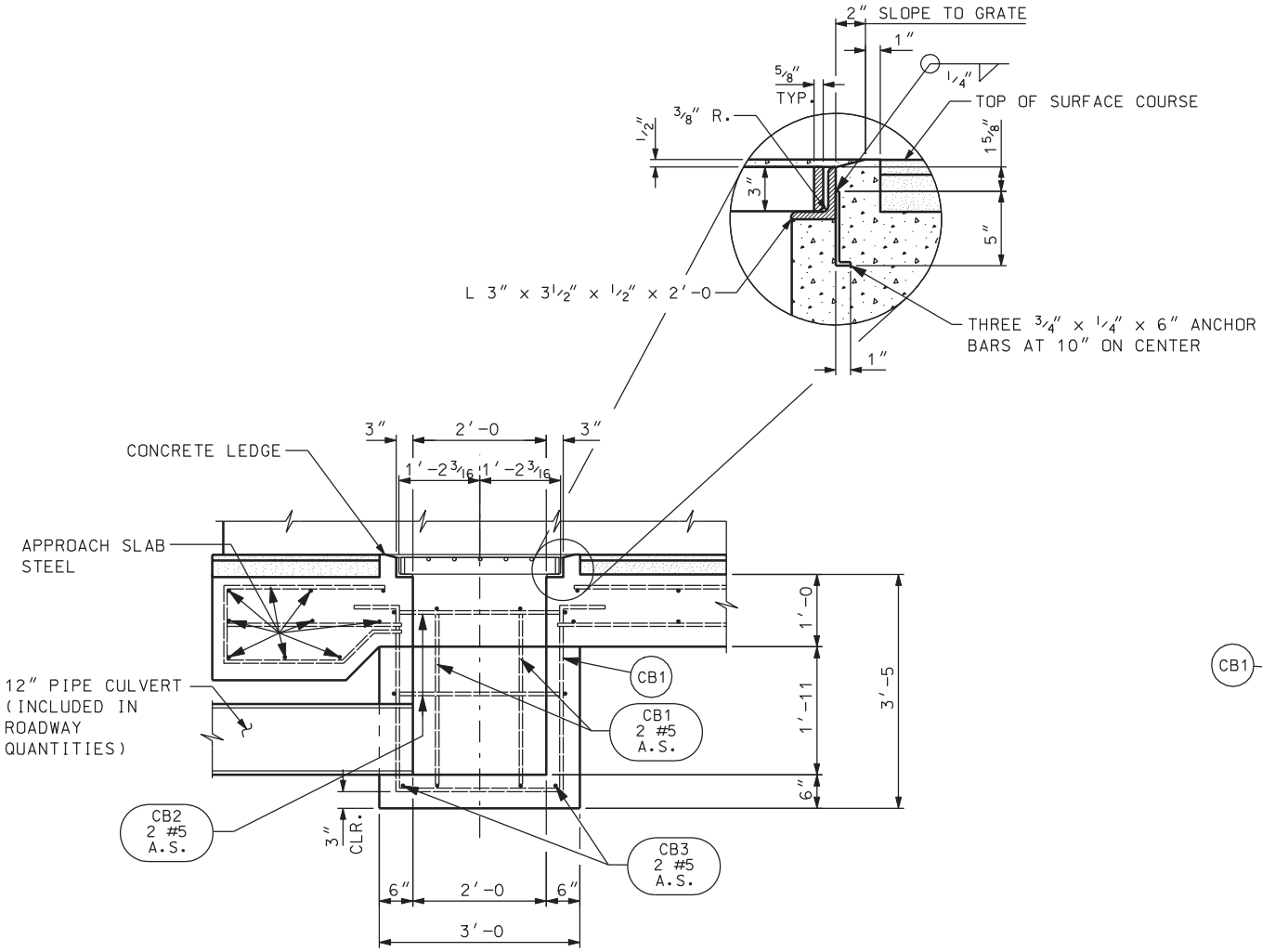


SECTION A-A

DGN File: N:\Projects\4433.04\Sheet.Files\Structures\F-9W\4433.f-9w-19_apprdrain.dgn

05-MAY-2005

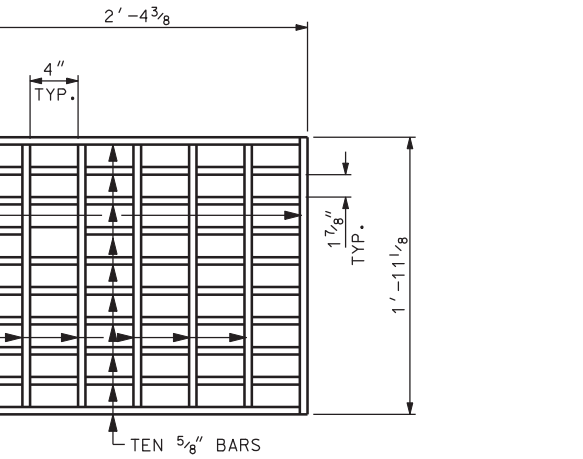


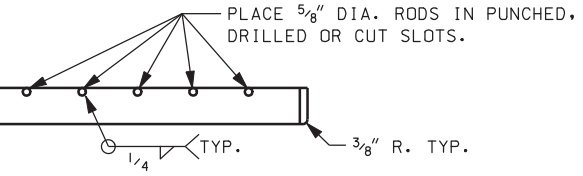


## GRATE DETAIL

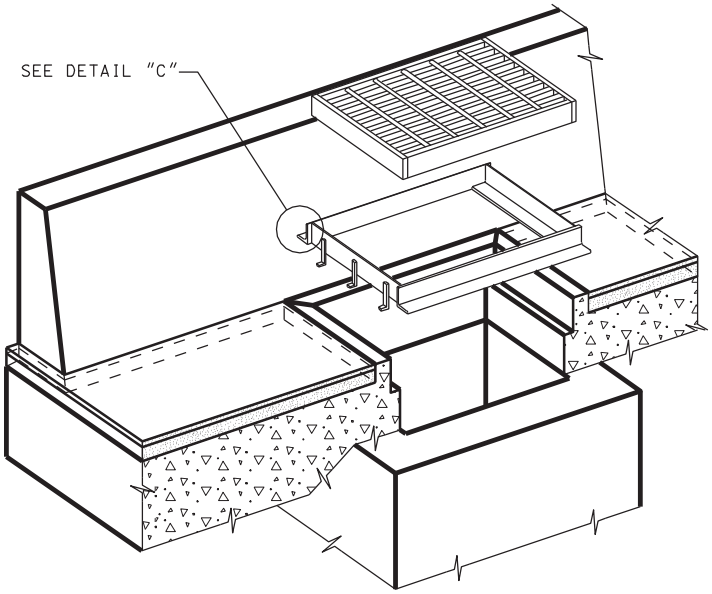


## ISOMETRIC

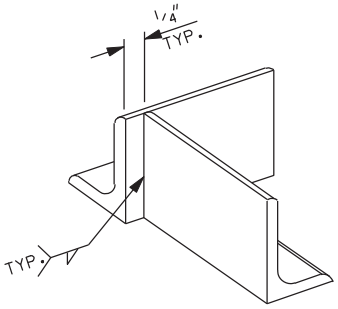


## DETAIL "C"

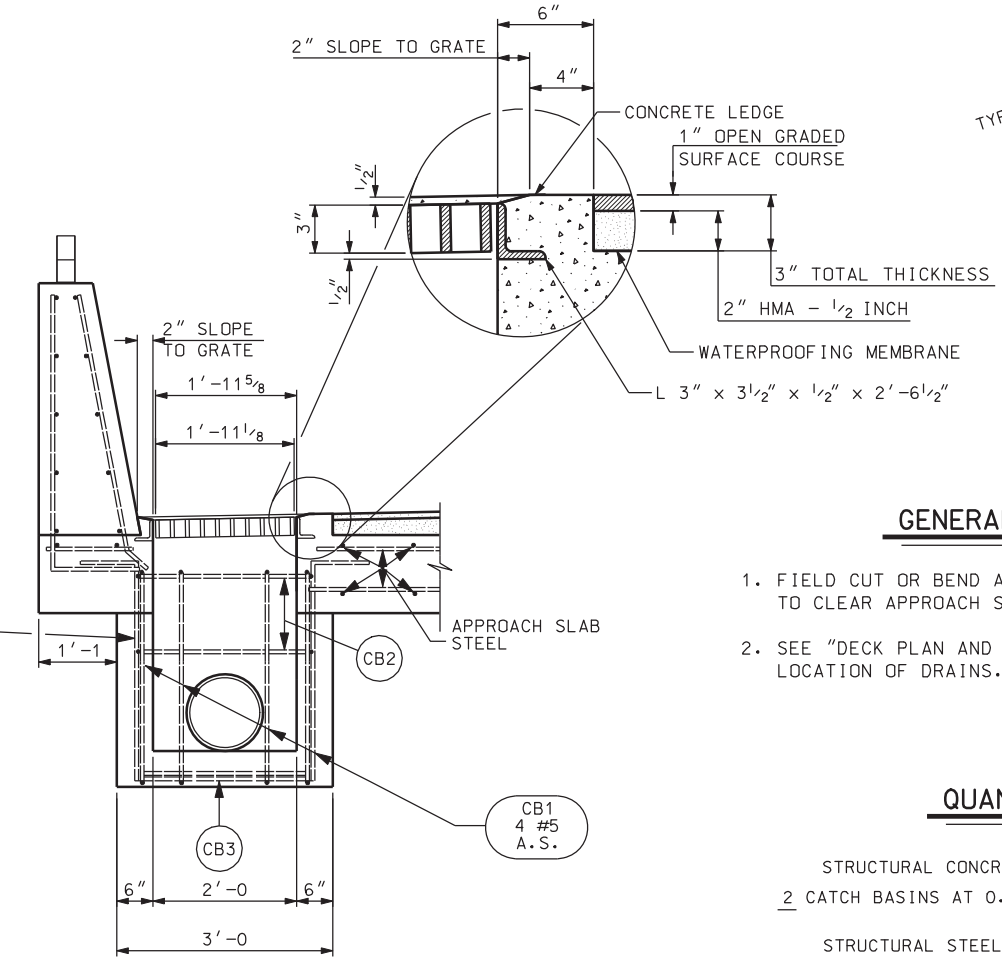


## SECTION B-B

## GENERAL NOTES

1. FIELD CUT OR BEND APPROACH SLAB REINFORCING TO CLEAR APPROACH SLAB DRAINS.
2. SEE "DECK PLAN AND SECTION" SHEET FOR ACTUAL LOCATION OF DRAINS.

## QUANTITIES

STRUCTURAL CONCRETE QUANTITIES

2 CATCH BASINS AT 0.5 CU. YDS = 1.0 CU. YDS

STRUCTURAL STEEL QUANTITY

2 GRATES AND FRAMES AT 273 LBS = 546 LBS

| NO. | DATE | BY | REMARKS |
|---|---|---|---|

REVISIONS

UTAH DEPARTMENT OF TRANSPORTATION
SALT LAKE CITY, UTAH
STRUCTURES DIVISION

DESIGN MDR 12/04 CHECK GG 12/04
DRAWN LM 12/04 CHECK MDR 12/04
QUANT. MDR 12/04 CHECK LM 12/04

APPROVAL RECOMM. DATE SENIOR DESIGN ENGR.
APPROVED FOR USE BY UDOT DATE UDOT BRIDGE ENGR.

I-15; CORRIDOR IN UTAH COUNTY
100 EAST OVERPASS IN LEHI
APPROACH SLAB DRAIN DETAILS

PROJECT NUMBER SP-15-6(52)241

UTAH
COUNTY

F-9W
DRG. NO.

SHT. 19 OF 21

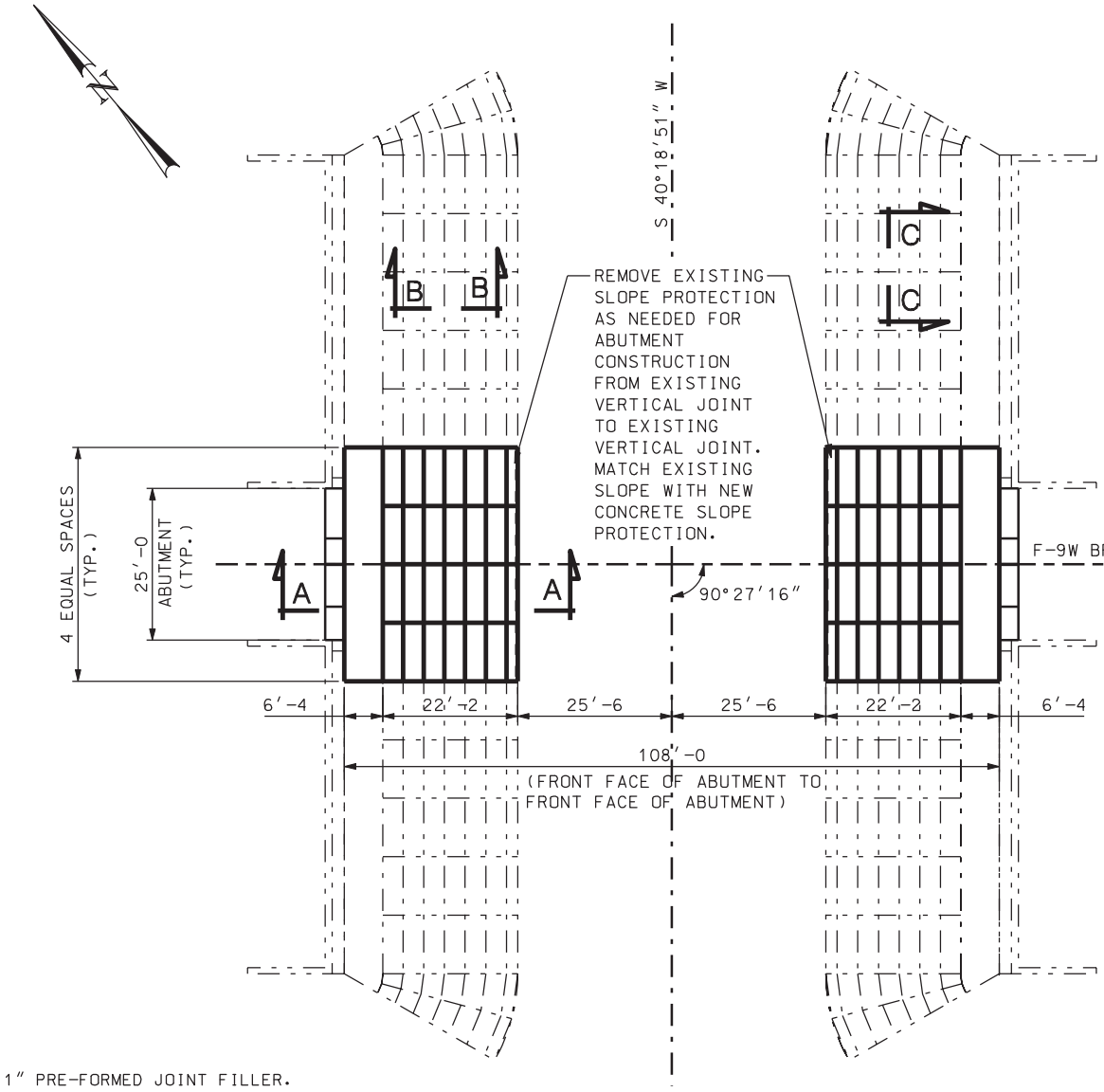


FA

## PLAN

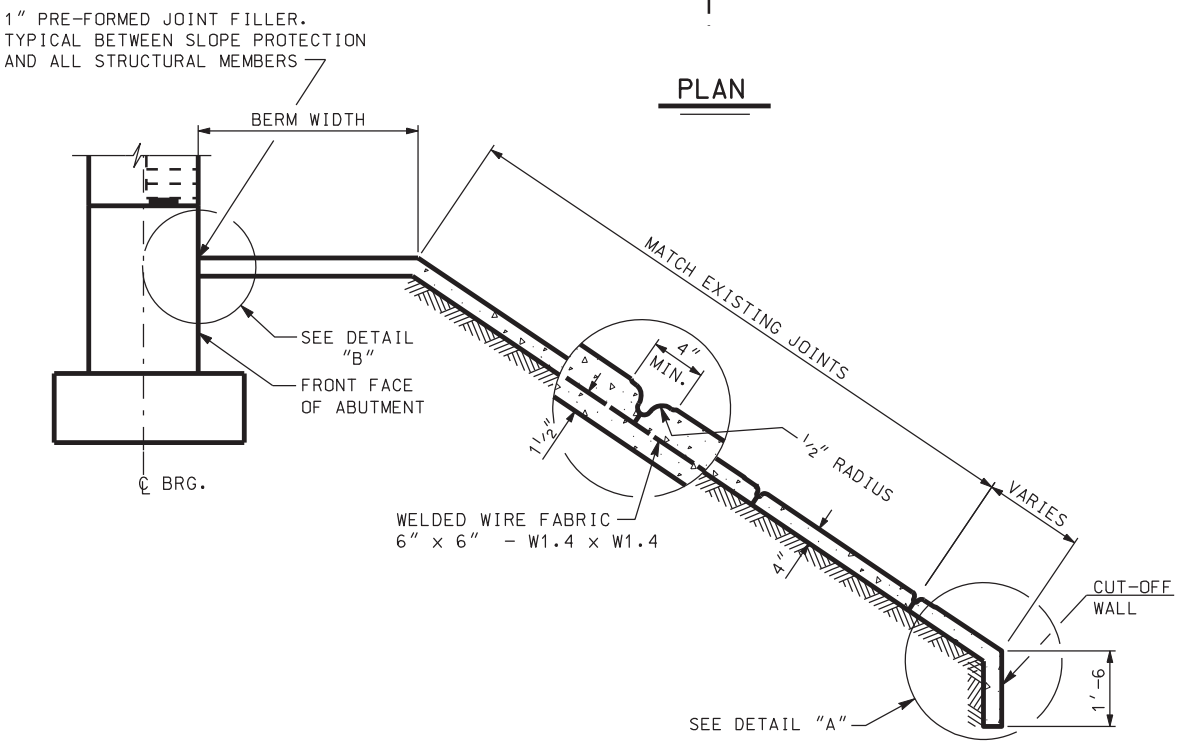


## SECTION A-A

ABU

DGN File: N:\Projects\4433.04\Sheet.Files\Structures\F-9W\4433.f-9w-20.slopeprotect.dgn

05-MAY-2005

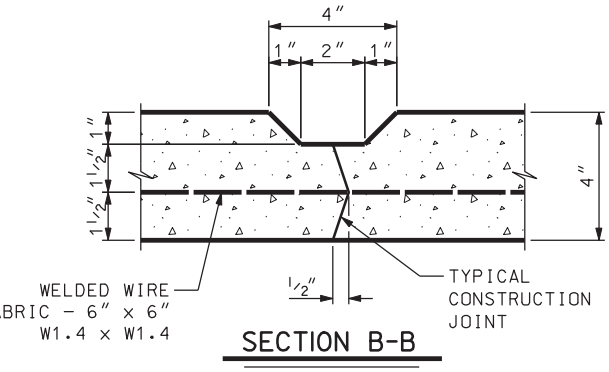


SECTION B-B

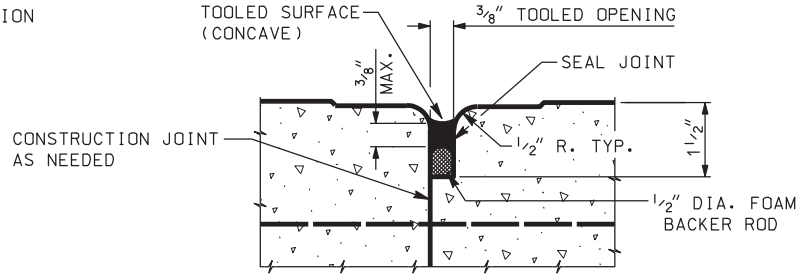


VERTICAL JOINT DETAIL

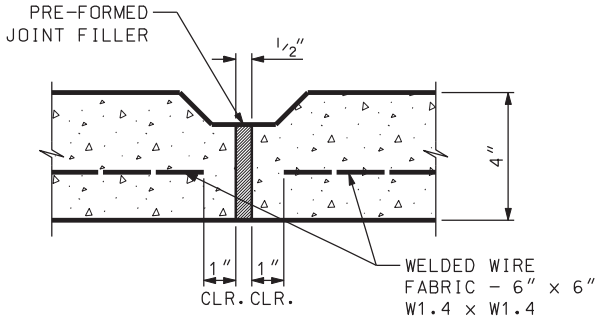


SECTION C-C

## NOTES:

1. QUANTITIES GIVEN FOR REPLACE CONCRETE SLOPE PROTECTION ARE ESTIMATES ONLY AND ARE BASED ON THE EXPOSED FINISHED CONCRETE SURFACE AREA.
2. JUST PRIOR TO FINAL INSPECTION SEAL JOINTS BETWEEN THE CONCRETE SLOPE PROTECTION AND ALL STRUCTURAL MEMBERS.
3. USE CLASS A (AE) CONCRETE FOR ALL SLOPE PROTECTION.
4. CUT-OFF WALL (1'-6 x 4" THICK) IS CONTINUOUS AROUND PERIMETER OF SLOPE PROTECTION EXCEPT AT THE ABUTMENT FOOTING. PAYMENT FOR CUT-OFF WALLS IS INCLUDED IN THE CONTRACT PRICE PER CUBIC YARD FOR CONCRETE SLOPE PROTECTION.
5. MATCH EXISTING CONCRETE SLOPE PAVING. SEE EXISTING F-9 PLANS FOR MORE DETAILS.

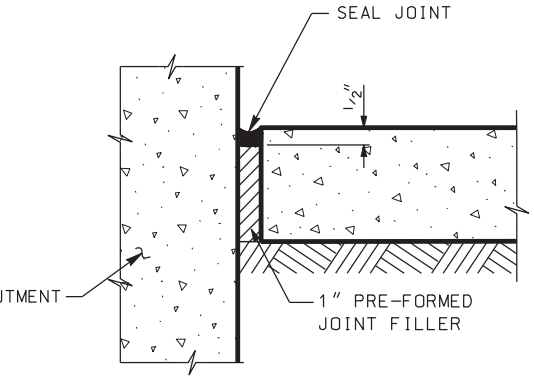


DETAIL "B"

#5 x 3'-0 AT 12" O.C.
TYPICAL AT TOE OF SLOPE.
BEND TO MATCH SLOPE
PROTECTION.

DETAIL "A"

| REPLACE CONCRETE SLOPE PROTECTION QUANTITIES | |
|---|---|
| LOCATION | SQUARE YARDS |
| ABUTMENT #1 | 150 |
| ABUTMENT #4 | 150 |
| TOTAL | 300 |

REVISIONS

| NO. | DATE | BY | REMARKS |
|---|---|---|---|
| | | | |

UTAH DEPARTMENT OF TRANSPORTATION
SALT LAKE CITY, UTAH
STRUCTURES DIVISION

DESIGN MDR 12/04 CHECK GG 12/04
DRAWN LM 12/04 CHECK MDR 12/04
QUANT. MDR 12/04 CHECK LM 12/04

APPROVAL RECOMM. DATE SENIOR DESIGN ENGR.
APPROVED FOR USE BY UDOT DATE UDOT BRIDGE ENGR.

I-15: CORRIDOR IN UTAH COUNTY
100 EAST OVERPASS IN LEHI
CONCRETE SLOPE PROTECTION

PROJECT NUMBER SP-15-6(52)241

UTAH
COUNTY

F-9W
DRG. NO.

SHT. 20 OF 21

| MARK | LOCATION | SIZE NO. | NO. BARS | LENGTH | TOTAL LENGTH | SKETCH |
|---|---|---|---|---|---|---|
| F1 | FOOTING | 7 | 152 | 9′-6 | 1,444′-0 | 3′-10 / 5′-8 |
| F2 | FOOTING | 5 | 48 | 9′-0 | 432′-0 | |
| F3 | FOOTING | 7 | 76 | 5′-2 | 392′-8 | |
| F4 | FOOTING | 5 | 48 | 3′-2 | 152′-0 | |
| F5 | FOOTING | 9 | 112 | 16′-11 | 1,894′-8 | |
| F6 | FOOTING | 9 | 160 | 5′-6 | 880′-0 | |
| F7 | FOOTING | 5 | 216 | 4′-1 | 882′-0 | 0′-8, 135°, ϕ, 0′-10, 2′-7, HOOK DIAMETER ϕ= 0′-3 |
| F8 | FOOTING | 8 | 32 | 4′-11 | 157′-4 | |
| A1 | ABUTMENT | 5 | 40 | 12′-0 | 480′-0 | |
| A2 | ABUTMENT | 7 | 24 | 4′-0 | 96′-0 | |
| A3 | ABUTMENT | 7 | 24 | 4′-6 | 108′-0 | |
| A4 | ABUTMENT | 4 | 100 | 4′-2 | 416′-8 | 0′-8, 0′-8, 2′-10 |
| A5 | ABUTMENT | 7 | 12 | 4′-6 | 54′-0 | 1′-2, 3′-4 |
| A6 | ABUTMENT | 7 | 80 | 7′-8 | 613′-4 | 1′-2, 6′-6 |
| A7 | ABUTMENT | 7 | 100 | 6′-4 | 633′-4 | 1′-2, 5′-2 |
| A8 | ABUTMENT | 5 | 32 | 3′-2 | 101′-4 | |
| C1 | COLUMN | 9 | 64 | 26′-7 | 1,701′-4 | 1′-8, 1′-8, 23′-3 |
| C2 | COLUMN | 5 | 1136 | 4′-2 | 4,733′-4 | 0′-8, 135°, ϕ, 0′-10, 2′-8, HOOK DIAMETER ϕ= 0′-3 |
| C3 | COLUMN | 5 | 284 | 11′-8 | 3,313′-4 | 0′-6, 2′-8, 2′-8 |
| B1 | BENT | 9 | 40 | 13′-1 | 523′-4 | 1′-5, 5′-11, 4′-2, 1′-5, 5′-9, 3′-0, 3′-11 |
| B2 | BENT | 8 | 16 | 12′-7 | 201′-4 | |
| B3 | BENT | 9 | 40 | 15′-11 | 636′-8 | 1′-8, 1′-8, 12′-7 |
| B4 | BENT | 5 | 92 | 4′-10 | 444′-8 | 0′-10, 0′-10, 3′-2 |

| MARK | LOCATION | SIZE NO. | NO. BARS | LENGTH | TOTAL LENGTH |
|---|---|---|---|---|---|
| B5 | BENT | 5 | 24 | 10′-5 | 250′- |
| | | | | | |
| B6 | BENT | 5 | 16 | 9′-10 | 157′- |
| B7 | BENT | 5 | 32 | 9′-8 | 309′- |
| | | | | | G BAR H SET |
| B8 | BENT | 5 | 52 | 4′-6 | 234′- |
| B9 | BENT | 8 | 12 | 4′-10 | 58′- |
| | | | | | |
| B10 | BENT | 5 | 56 | 8′-3 | 462′- |
| B11 | BENT | 5 | 56 | 8′-6 | 476′- |
| | | | | | G BAR H SET |
| S1 | SLAB | 4 | 350 | 3′-9 | 1,312′ |
| | | | | | HOO |
| S2 | SLAB | 4 | 350 | 3′-9 | 1,312′ |
| S3 | SLAB | 5 | 62 | 114′-3 | 7,083′- |
| S4 | SLAB | 5 | 60 | 13′-0 | 780′- |
| S5 | SLAB | 5 | 450 | 14′-6 | 6,525′ |
| S6 | SLAB | 5 | 224 | 4′-9 | 1,064′ |
| S7 | SLAB | 6 | 92 | 3′-8 | 337′- |
| D1 | DIAPHRAGM | 4 | 72 | 5′-3 | 378′- |
| D2 | DIAPHRAGM | 4 | 72 | 4′-11 | 354′- |
| D3 | DIAPHRAGM | 4 | 12 | 2′-10 | 34′- |
| D4 | DIAPHRAGM | 4 | 6 | 5′-6 | 33′- |
| D5 | DIAPHRAGM | 4 | 48 | 9′-6 | 456′- |
| D6 | DIAPHRAGM | 6 | 72 | 4′-7 | 330′- |
| D7 | DIAPHRAGM | 6 | 16 | 7′-10 | 125′- |
| D8 | DIAPHRAGM | 6 | 12 | 4′-0 | 48′- |
| D9 | DIAPHRAGM | 6 | 4 | 12′-8 | 50′- |
| D10 | DIAPHRAGM | 7 | 112 | 4′-2 | 466′- |
| D11 | DIAPHRAGM | 6 | 12 | 14′-6 | 174′- |
| D12 | DIAPHRAGM | 6 | 8 | 1′-5 | 11′- |
| D13 | DIAPHRAGM | 5 | 408 | 2′-1 | 850′- |
| D14 | DIAPHRAGM | 5 | 176 | 2′-4 | 410′- |

| AL TH | SKETCH |
|---|---|
| -0 | HOOK DIAMETER ϕ = 0'-3 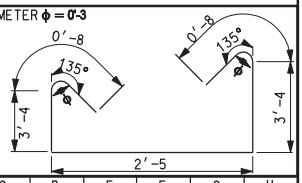  |

| | A | B | C | D | E | F | G | H |
|---|---|---|---|---|---|---|---|---|
| -4 | 2'-5 | 3'-3 | 2'-10 | 0'-8 | 135 | 0'-3 | 2 | 8 |
| -4 | 2'-5 | 3'-4 | 2'-7 | 0'-8 | 135 | 0'-3 | 4 | 8 |

HOOK DIA. ϕ = F

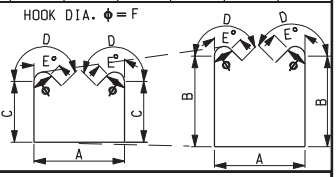


(S) PER SET
(S) REQ'D

-0

-0

| | A | B | C | D | E | F | G | H |
|---|---|---|---|---|---|---|---|---|
| -0 | 2'-5 | 2'-5 | 2'-1 | 0'-8 | 135 | 0'-3 | 7 | 8 |
| -0 | 2'-5 | 2'-8 | 2'-1 | 0'-8 | 135 | 0'-3 | 7 | 8 |

HOOK DIA. ϕ = F

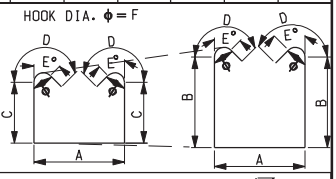


(S) PER SET
(S) REQ'D

-6

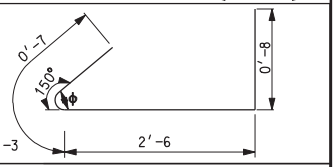


K DIAMETER ϕ = 0'-3

-6

HOOK DIAMETER ϕ = 0'-3

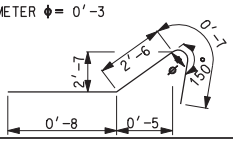


6

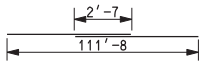


1 SPLICE(S) REQ'D

-0

-0

-0

-4

-0

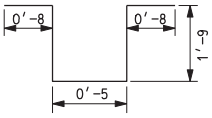


-0

-0

-0

-0

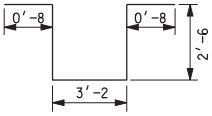


-0

-4

-0

-8

-8

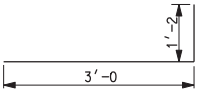


-0

-4

-0

-8

| MARK | LOCATION | SIZE NO. | NO. BARS | LENGTH | TOTAL LENGTH | SKETCH |
|---|---|---|---|---|---|---|
| D15 | DIAPHRAGM | 5 | 336 | 1'-10 | 616'-0 | |
| D16 | DIAPHRAGM | 5 | 40 | 3'-4 | 133'-4 | |
| D17 | DIAPHRAGM | 5 | 8 | 55'-0 | 440'-0 | |
| D18 | DIAPHRAGM | 5 | 12 | 52'-0 | 624'-0 | |
| D19 | DIAPHRAGM | 5 | 640 | 2'-7 | 1,653'-4 | |
| AS1 | APPROACH | 9 | 92 | 14'-9 | 1,357'-0 | |
| AS2 | APPROACH | 5 | 92 | 14'-9 | 1,357'-0 | |
| AS3 | APPROACH | 5 | 184 | 14'-6 | 2,668'-0 | |
| AS4 | APPROACH | 5 | 12 | 14'-7 | 175'-0 | |
| AS5 | APPROACH | 5 | 92 | 5'-3 | 483'-0 | 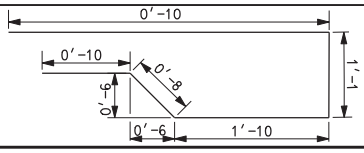  |
| P1 | PARAPET | 4 | 700 | 3'-4 | 2,333'-4 | |
| P2 | PARAPET | 4 | 40 | 14'-7 | 583'-4 | |
| P3 | PARAPET | 4 | 20 | 115'-10 | 2,316'-8 | 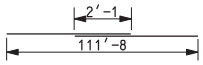  2 SPLICE(S) REQ'D |
| CB1 | CATCH BASIN | 5 | 12 | 9'-6 | 114'-0 | 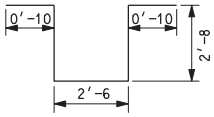  |
| CB2 | CATCH BASIN | 5 | 4 | 12'-11 | 51'-8 | 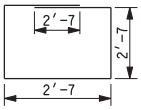  |
| CB3 | CATCH BASIN | 5 | 4 | 2'-6 | 10'-0 | |

SUMMARY OF COATED BARS

| | | | | | | |
|---|---|---|---|---|---|---|
| 9,530'-0 | OF NUMBER | 4 | BARS AT | 0.668 LBS/FT | = | 6,366.0 LBS |
| 37,465'-10 | OF NUMBER | 5 | BARS AT | 1.043 LBS/FT | = | 39,076.9 LBS |
| 1,076'-8 | OF NUMBER | 6 | BARS AT | 1.502 LBS/FT | = | 1,617.2 LBS |
| 3,808'-0 | OF NUMBER | 7 | BARS AT | 2.044 LBS/FT | = | 7,783.6 LBS |
| 416'-8 | OF NUMBER | 8 | BARS AT | 2.670 LBS/FT | = | 1,112.5 LBS |
| 6,993'-0 | OF NUMBER | 9 | BARS AT | 3.400 LBS/FT | = | 23,776.2 LBS |
| | | | | TOTAL | | 79,732.3 LBS |

NOTES:

ALL BARS ARE COATED

BAR SIZES ARE U.S. UNITS.

REINFORCING STEEL DIMENSIONS ARE OUT TO OUT OF BAR UNLESS OTHERWISE SPECIFIED.

SPLICES MAY BE OMITTED AT FABRICATORS OPTION...HOWEVER, IN SUCH CASE, FABRICATOR ASSUMES RESPONSIBILITY FOR FIT.

REVISIONS

| NO. | DATE | BY | REMARKS |
|---|---|---|---|
| | | | |

UTAH DEPARTMENT OF TRANSPORTATION
SALT LAKE CITY, UTAH
STRUCTURES DIVISION

DESIGN MDR 12/04 CHECK GG 12/04
DRAWN LM 12/04 CHECK MDR 12/04
QUANT. MDR 12/04 CHECK LM 12/04

APPROVAL RECOMM. DATE SENIOR DESIGN ENGR.
APPROVED FOR USE BY UDOT DATE UDOT BRIDGE ENGR.

I-15; CORRIDOR IN UTAH COUNTY
100 EAST OVERPASS IN LEHI
REINFORCING STEEL SCHEDULE

PROJECT NUMBER SP-15-6(52)241

UTAH
COUNTY

F-9W
DRG. NO.

SHT. 21 OF 21

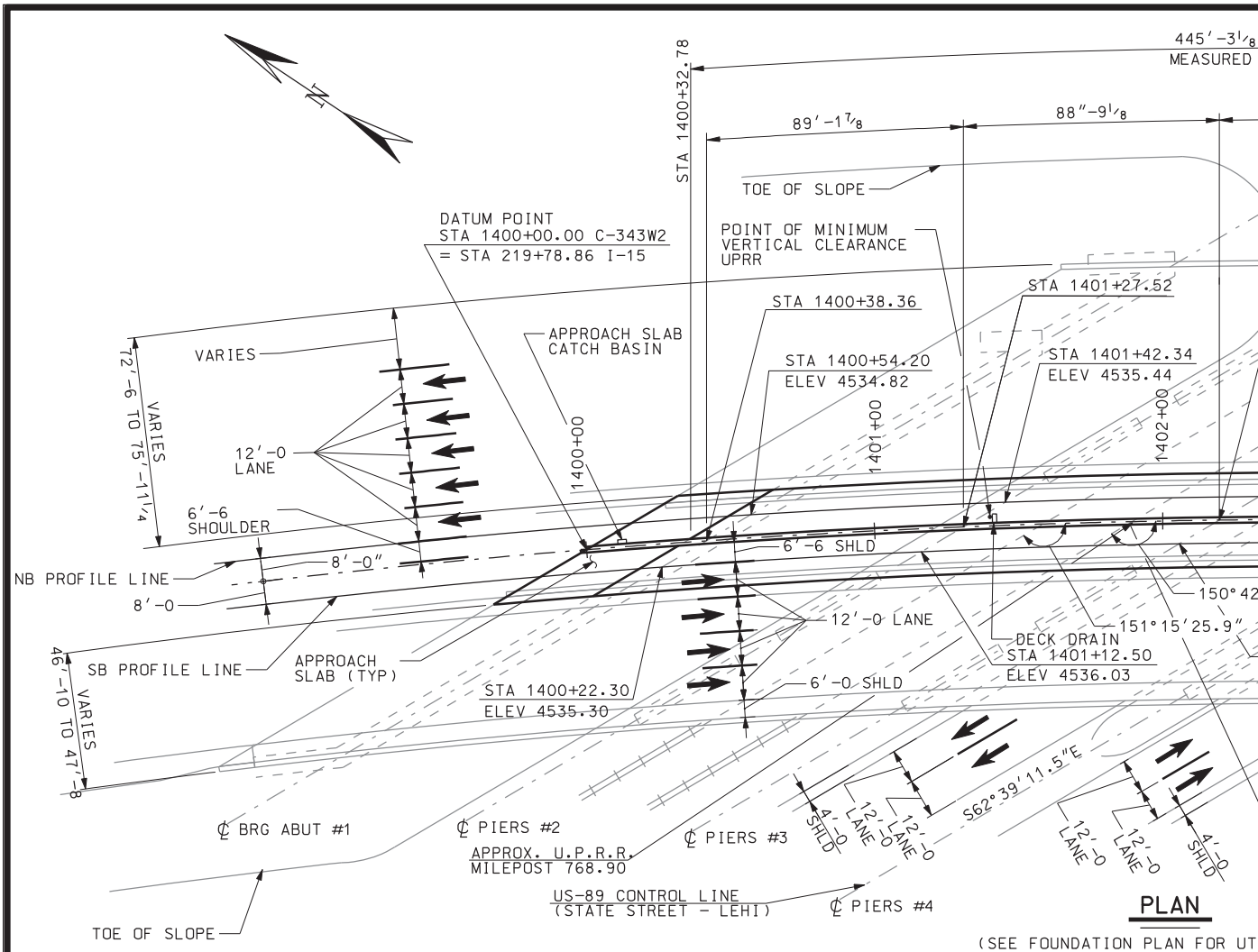


## PLAN

(SEE FOUNDATION PLAN FOR UT

## DESIGN DATA

WIDENING DESIGNED FOR HL-93 LOAD
WITH AASHTO LRFD BRIDGE DESIGN S

INVENTORY AND OPERATING RATINGS
AASHTO MANUAL FOR CONDITION EVAL
2001 AND 2003 INTERIM SPECIFICAT
OPERATING RATINGS FOR HL-93 ARE
CONDITION EVALUATION AND LOAD RE
BRIDGES.

| | OPERAT |
|---|---|
| EXISTING GIRDERS (SPAN 2) | (HS- |
| | (HL- |
| NEW GIRDERS (SPAN 2) | (HL- |

CAST-IN-PLACE CONCRETE:
f′c = 4000 psi; fy (REINF) = 60

STRUCTURAL STEEL:
fy = 36 ksi GRADE 36 MINIMUM

WEARING SURFACE: 3″ ASPHALT, 0″

DESIGN SPEED: US-89 = 50 mph; I-

SEISMIC: SEISMIC DESIGN PARAMETE
Ss = MAX CONSIDERED EQ
S1 = MAX CONSIDERED EQ
SITE CLASS D
EXISTING STRUCTURE ELEM
DESIGN CRITERIA.

| ANGLES A | |
|---|---|
| LOCATION | NORTHBOU PROFILE L |
| ℄ BRG ABUT #1 | 153°05′0 |
| ℄ PIERS #2 | 151°32′2 |
| ℄ PIERS #3 | 150°00′1 |
| ℄ PIERS #4 | 148°25′3 |
| ℄ PIERS #5 | 147°00′1 |
| ℄ BRG ABUT #6 | 145°32′2 |

## NOTES

1. ALL REINFORCING STEEL, USE COATED DEFORMED BILLET- STEEL BARS CONFORMING TO AASHTO M284 AND AASHTO M 31, GRADE 60 RESPECTIVELY.
2. ALL CAST-IN-PLACE CONCRETE IS CLASS AA (AE) EXCEPT WHERE NOTED OTHERWISE.
3. ALL STRUCTURAL STEEL CONFORMS TO AASHTO M 270 GRADE 36 MINIMUM EXCEPT WHERE NOTED OTHERWISE.
4. CHAMFER ALL EXPOSED CONCRETE CORNERS 3/4″ EXCEPT WHERE NOTED OTHERWISE.
5. PROVIDE 2″ CONCRETE COVER TO REINFORCING STEEL EXCEPT WHERE NOTED OTHERWISE.
6. PLACE 3′-0″ OF GRANULAR BACKFILL BORROW BEHIND THE ABUTMENTS. NO MEASUREMENT OR PAYMENT WILL BE MADE FOR GRANULAR BACKFILL BORROW PLACED OUTSIDE OF THESE DETAILED LATERAL LIMITS.
7. INCLUDE PARTIAL REMOVAL OF EXISTING RETAINING WALL BETWEEN ABUTMENTS IN PREPARE EXISTING BRIDGE FOR WIDENING ITEM.
8. EXISTING ASPHALT OVERLAY DEPTH VARIES FROM 3″ OVER EXPANSION JOINTS TO 6″ MAX.
9. SEE SURVEY CONTROL SHEET TO ESTABLISH DATUM POINT STATION AND PGL ELEVATIONS.
10. SHORING DESIGN TO MEET THE REQUIREMENTS OUTLINED IN UPRR GENERAL SHORING REQUIREMENTS C.E. 106613. COMPLY WITH UPRR GUIDELINES FOR OVERHEAD FALSEWORK.
11. NO WORK MAY BE PERFORMED WITHIN 25 FEET OF TRACK CENTERLINE WHEN A TRAIN PASSES THE SITE.
12. NO DRAINAGE FROM OVERPASS STRUCTURE MAY BE DISCHARGED ONTO U.P.R.R. RIGHT-OF-WAY.
13. NO DEMOLITION OVER RAILROAD TRACKS WITHOUT THE APPROVAL OF U.P.R.R. DEMOLISH IN ACCORDANCE WITH U.P.R.R. GUIDELINES.
14. MAINTAIN MINIMUM CONSTRUCTION CLEARANCES OF 21′ VERTICALLY ABOVE THE PLANE OF TOP-OF-RAIL AND 12′ HORIZONTALLY AT A RIGHT ANGLE FROM CENTERLINE OF TRACK.
15. REINFORCING STEEL QUANTITY DOES NOT INCLUDE WWF IN SLOPE PAVING.

DGN File:IP_PWPcdms1717\4433_C343-01_S&L_Sheet1.dgn
02-MAY-2005

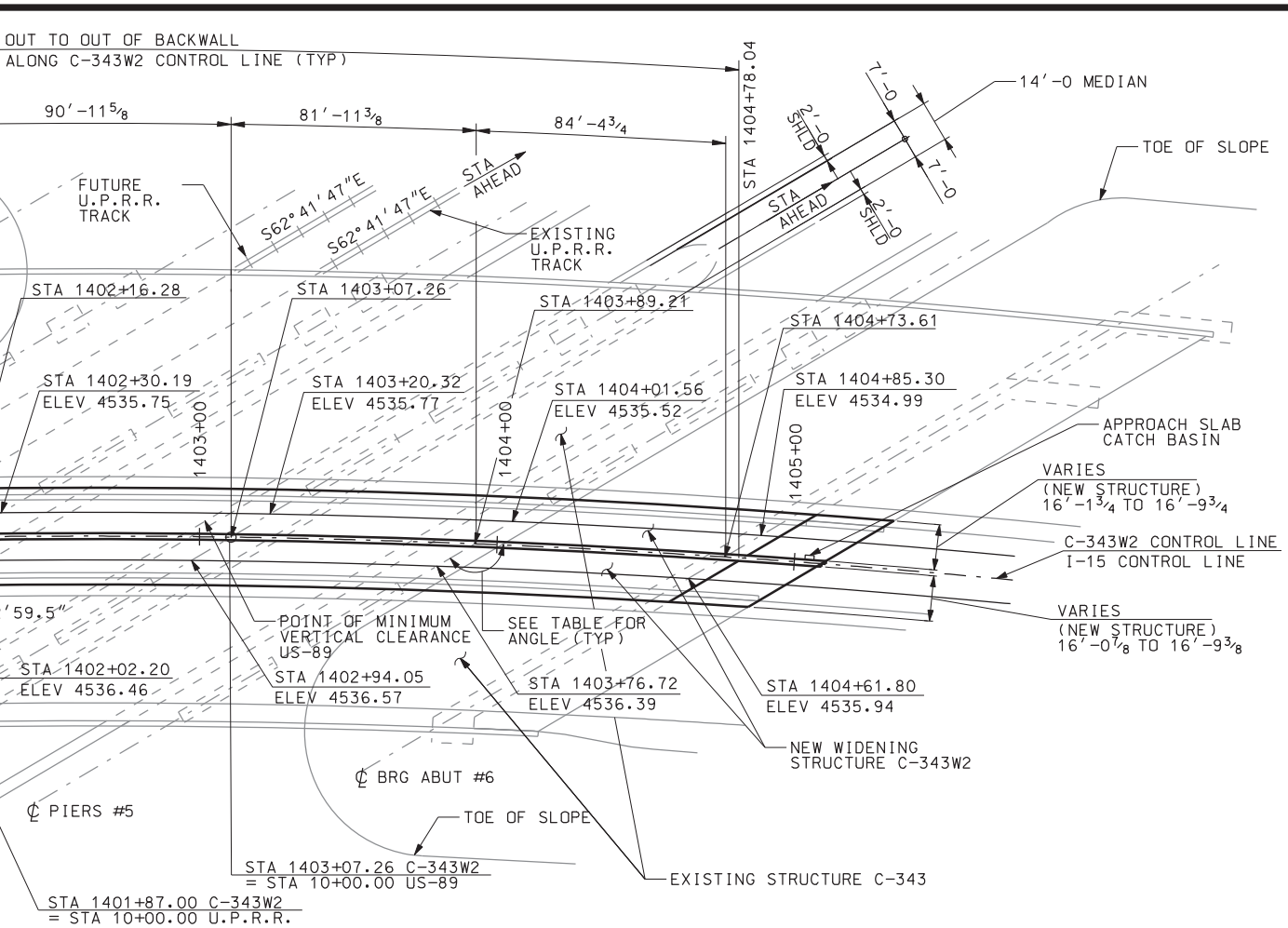


ILITIES)

ING IN ACCORDANCE
PECIFICATIONS 3RD ED 2004.

FOR HS20-44 ARE IN ACCORDANCE WITH THE
UATION OF BRIDGES, 2nd EDITION, AND THE
IONS LOAD FACTOR METHOD. INVENTORY AND
IN ACCORDANCE WITH THE GUIDE MANUAL FOR
SISTANCE FACTOR RATING (LRFR) OF HIGHWAY

| | ING RATING | | INVENTORY RATING | |
|---|---|---|---|---|
| 20) | 3.12 | | (HS-20) | 2.45 |
| 93) | 2.34 | | (HL-93) | 1.84 |
| 93) | 2.61 | | (HL-93) | 2.01 |

ksi, CLASS (AA) AE n = 8

FUTURE

15 = 65 mph

RS (500 YR RETURN PERIOD, 10% PE IN 50 YR)
GROUND MOTION, AT 0.2s = 0.48g
GROUND MOTION, AT 1.0s = 0.16g

ENTS DO NOT MEET THE SEISMIC

AS DEFINED IN PLAN

| ND LINE | C-343W2 CONTROL LINE | SOUTHBOUND PROFILE LINE |
|---|---|---|
| 0" | 153°21'38" | 153°38'30" |
| 7" | 151°48'01" | 152°03'47" |
| 2" | 150°14'49" | 150°29'36" |
| 5" | 148°39'17" | 148°53'09" |
| 6" | 147°13'15" | 147°26'21" |
| 1" | 145°44'37" | 145°57'01" |

## INDEX OF SHEETS


1. SITUATION AND LAYOUT 1 OF 3
2. SITUATION AND LAYOUT 2 OF 3
3. SITUATION AND LAYOUT 3 OF 3
4. SURVEY CONTROL SHEET
5. SOIL DATA SHEET 1 OF 2
6. SOIL DATA SHEET 2 OF 2
7. FOUNDATION PLAN
8. DRIVEN PILE DETAILS
9. ABUTMENT #1
10. ABUTMENT #6
11. ABUTMENT DETAILS
12. PIER DETAILS 1 OF 2
13. PIER DETAILS 2 OF 2
14. FRAMING PLAN
15. GIRDER DETAILS 1 OF 3
16. GIRDER DETAILS 2 OF 3
17. GIRDER DETAILS 3 OF 3
18. CROSS FRAMES & DIAPHRAGMS
19. BEARING DETAILS
20. SEISMIC RETROFIT DETAILS
21. DECK PLAN
22. DECK DETAILS
23. DECK CONSTRUCTION SEQUENCE
24. APPROACH SLAB
25. APPROACH SLAB DETAILS
26. EXPANSION JOINT DETAILS
27. SCREED ELEVATIONS
28. PARAPET DETAILS
29. PARAPET END DETAILS
30. APPROACH SLAB DRAIN DETAILS
31. DECK DRAIN DETAILS
32. CONCRETE SLOPE PROTECTION
33. REINFORCEMENT SCHEDULE 1 OF 3
34. REINFORCEMENT SCHEDULE 2 OF 3
35. REINFORCEMENT SCHEDULE 3 OF 3


QUANTITIES

| ITEM | ESTIMATE | UNIT | AS CONST |
|---|---|---|---|
| GRANULAR BACKFILL BORROW (PLAN QUANTITY) | 220 | CY | |
| DRIVEN PILES 12 3/4 INCH | 2944 | FEET | |
| STRUCTURAL CONCRETE (EST QTY 910 CY) | 1 | LUMP | |
| STRUCTURAL STEEL (EST QTY 412,247 LB) | 1 | LUMP | |
| REINFORCING STEEL - COATED | 203905 | LB | |
| PREPARE BRIDGE FOR WIDENING | 1 | LUMP | |
| PILE DRIVING EQUIPMENT | 1 | LUMP | |
| REPLACE CONCRETE SLOPE PROTECTION | 1444 | SQ YD | |
| EXPANSION JOINT | 131 | FEET | |
| EXPANSION JOINT GLAND REPLACEMENT | 480 | FEET | |
| DYNAMIC PILE TESTING | 9 | EACH | |

| NO. | DATE | BY | REMARKS |
|---|---|---|---|
| | | | |

REVISIONS

Baker

UTAH DEPARTMENT OF TRANSPORTATION
SALT LAKE CITY, UTAH
STRUCTURES DIVISION

DESIGN JPD 09/04 CHECK AW 12/04
DRAWN GCK 09/04 CHECK JPD 12/04
QUANT. JPD 01/05 CHECK MSA 01/05

APPROVAL RECOMM. DATE DESIGN ENGR.
APPROVED FOR USE BY UDOT DATE UDOT BRIDGE ENGR.

I-15: UTAH COUNTY
U.P.R.R. & US-89 OVERPASS
SITUATION AND LAYOUT 1 OF 3

PROJECT NUMBER SP-15-6(52)241

UTAH
COUNTY

C-343W2
DRG. NO.

SHT. 1 OF 35

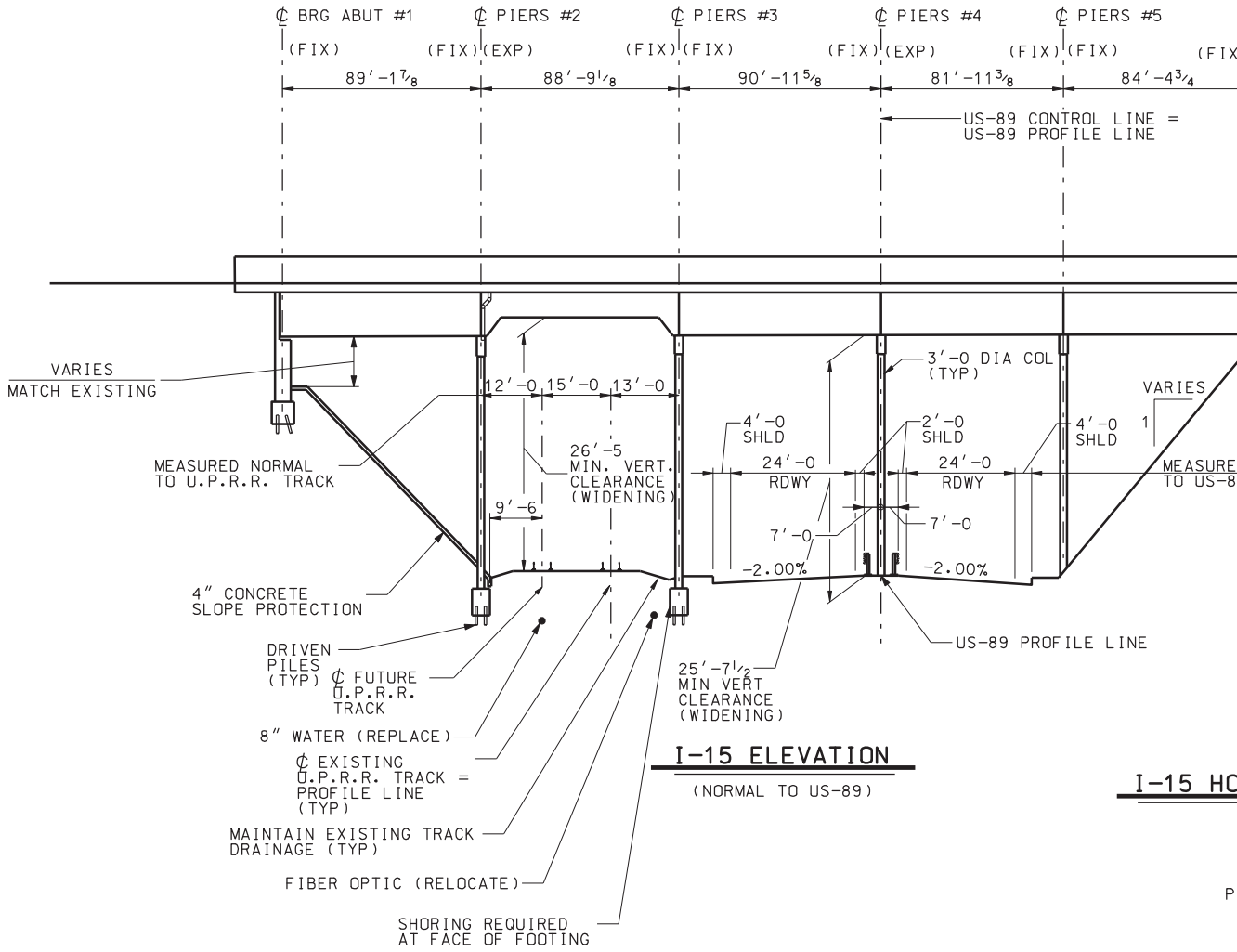


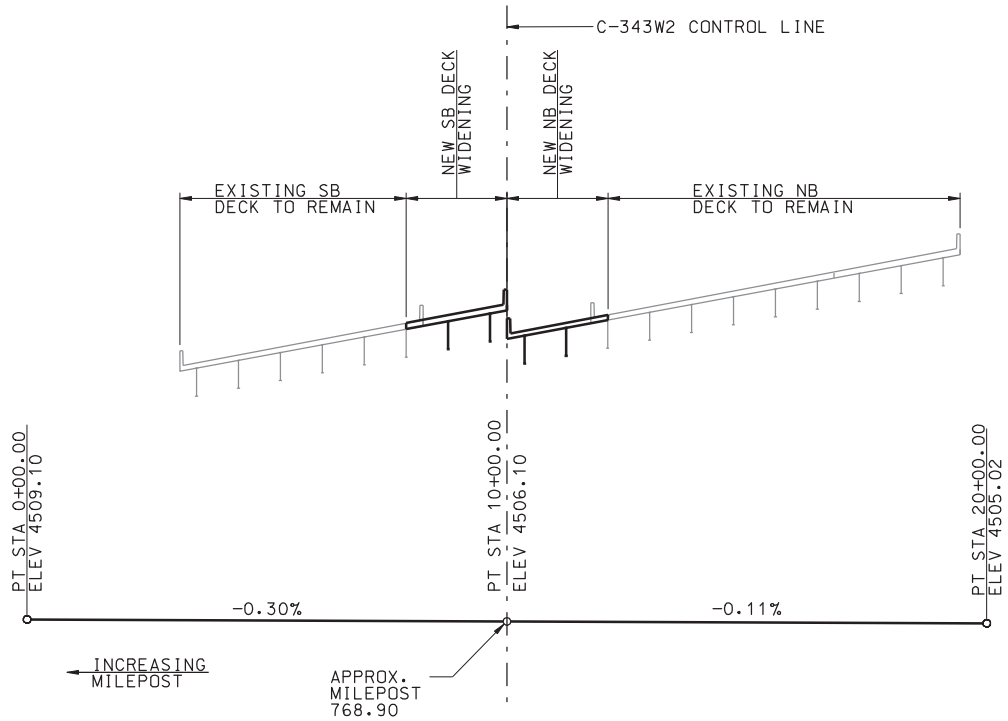


U.P.R.R. PROFILE

(AS SURVEYED)

DGN File:IP_PWPcdnsl717\4433_C343-02_S&L_Sheet2.dgn

02-MAY-2005

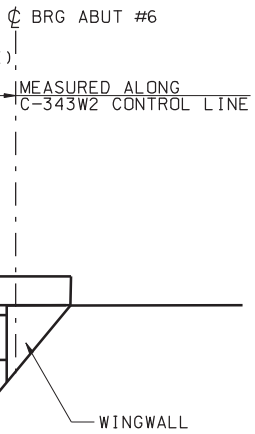


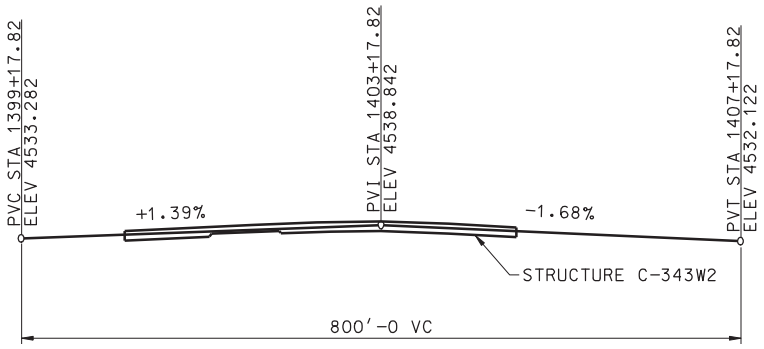


## C-343W2 NB PROFILE

D NORMAL
9 CONTROL LINE

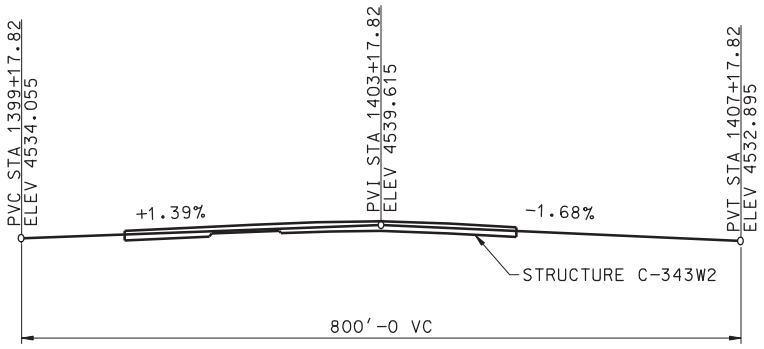


## C-343W2 SB PROFILE

## ORIZONTAL CURVE DATA

△ = 36°13'10"
R = 3274.05'
T = 1070.76
L = 2069.68'
I STA = 1399+96.26

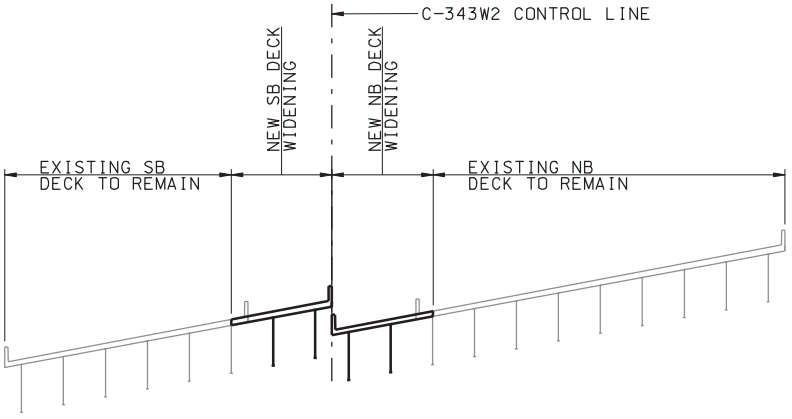


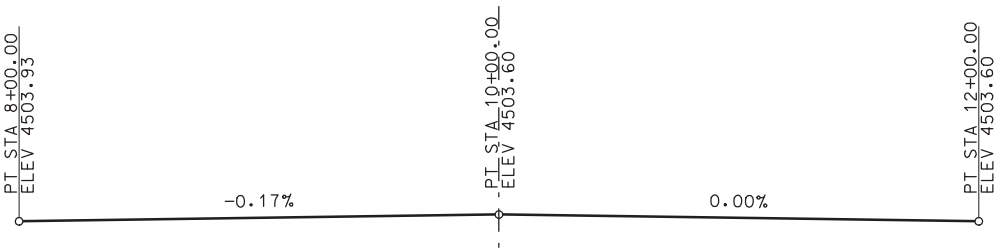


## US-89 PROFILE

(AS SURVEYED)

## NOTES

1. ALL DECK, APPROACH SLAB, AND PROFILE GRADE ELEVATIONS ARE AT TOP OF FINISHED GRADE.

| NO. | DATE | BY | REMARKS |
|---|---|---|---|
| | | | |

REVISIONS

Baker

UTAH DEPARTMENT OF TRANSPORTATION
SALT LAKE CITY, UTAH
STRUCTURES DIVISION

DESIGN JPD 12/04 CHECK AW 12/04
DRAWN GCK 12/04 CHECK MSA 12/04
QUANT. CHECK

APPROVAL RECOMM. DATE DESIGN ENGR.
APPROVED FOR USE BY UDOT DATE UDOT BRIDGE ENGR.

I-15: UTAH COUNTY
U.P.R.R. & US-89 OVERPASS
SITUATION AND LAYOUT 2 OF 3

PROJECT NUMBER SP-15-6(52)241

UTAH
COUNTY

C-343W2
DRG. NO.

SHT. 2 OF 35

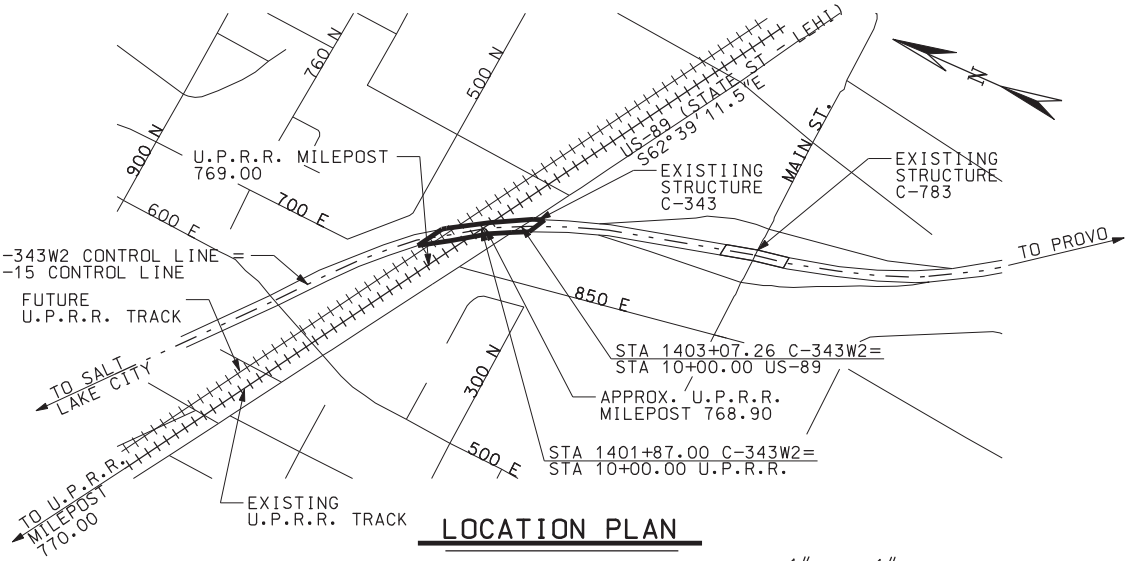


## LOCATION PLAN

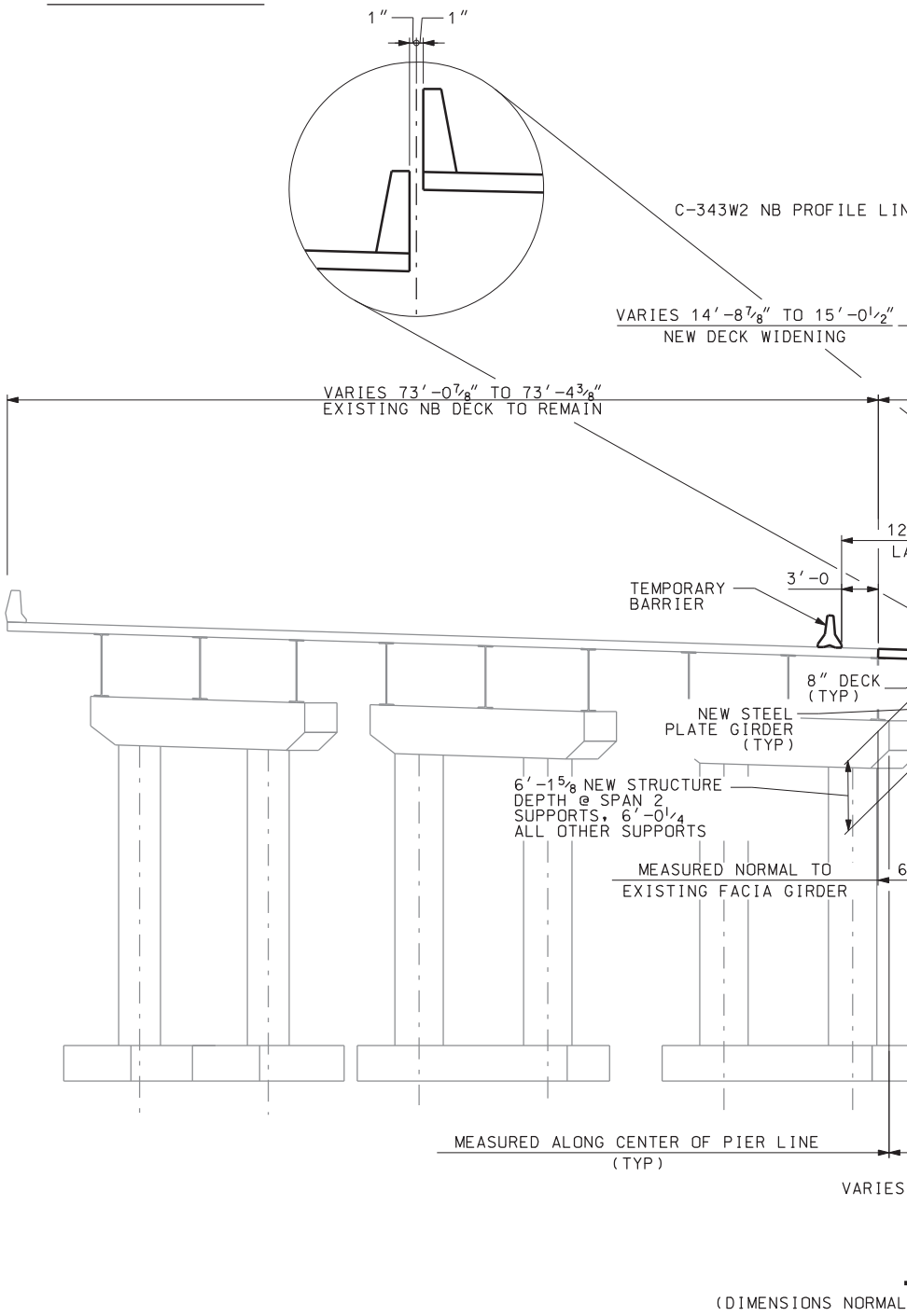


DGN File:IP_PWPcdnsl717\4433_C343-03_S&L_Sheet3.dgn

02-MAY-2005

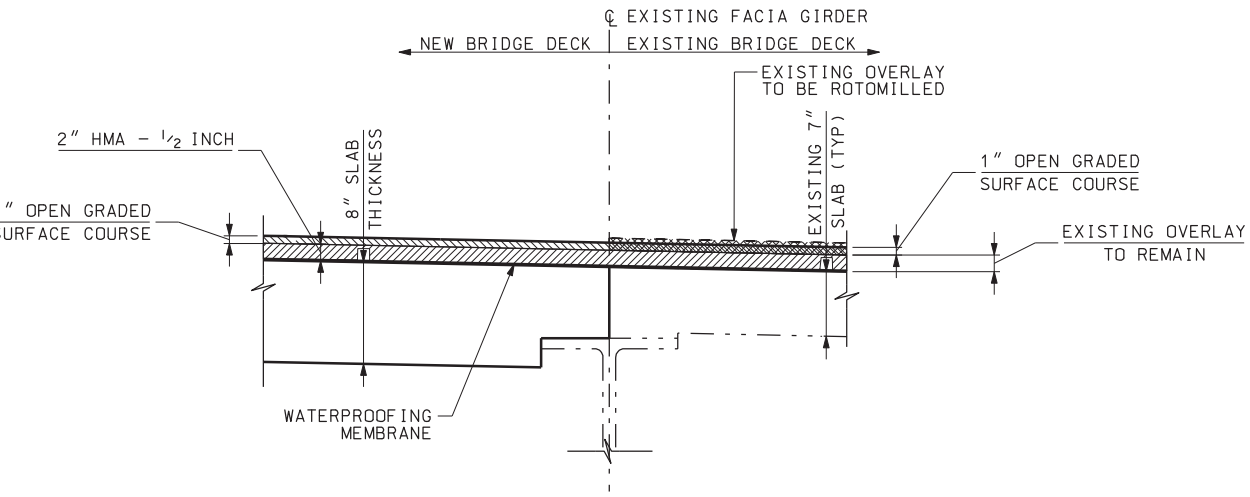


## DECK OVERLAY DETAIL

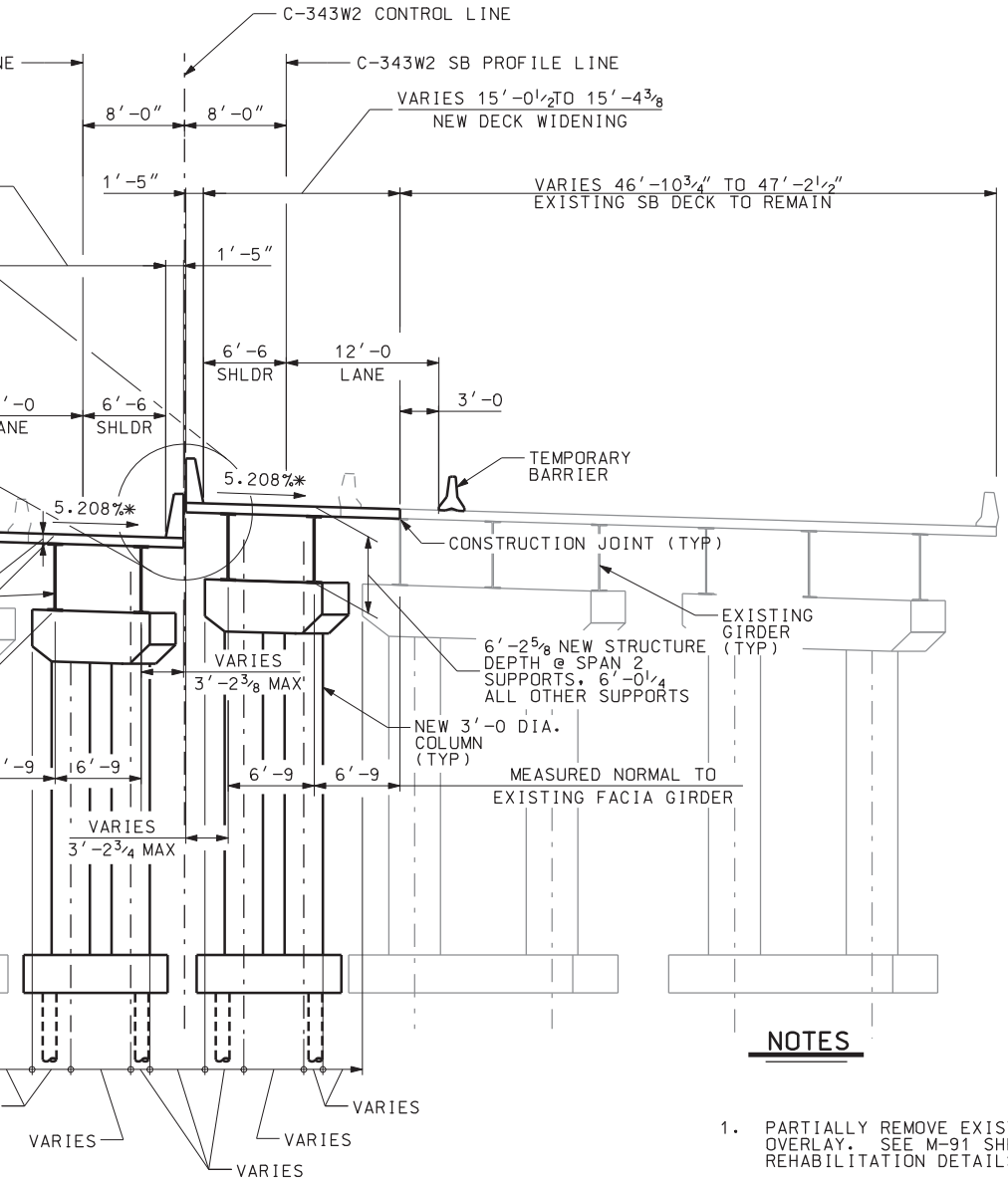


## TYPICAL SECTION

(TO C-343W2 CONTROL LINE UNLESS NOTED OTHERWISE)

## NOTES

1. PARTIALLY REMOVE EXISTING ASPHALT SURFACING OVERLAY. SEE M-91 SHEETS FOR TRANSITION AND REHABILITATION DETAILS.
2. * MATCH EXISTING CROSS SLOPE

| NO. | DATE | BY | REMARKS |
|---|---|---|---|

REVISIONS

Baker

UTAH DEPARTMENT OF TRANSPORTATION
SALT LAKE CITY, UTAH
STRUCTURES DIVISION

DESIGN JPD 12/04 CHECK AW 12/04
DRAWN GCK 12/04 CHECK MSA 12/04
QUANT. CHECK

APPROVAL RECOMM. DATE DESIGN ENGR.
APPROVED FOR USE BY UDOT DATE UDOT BRIDGE ENGR.

I-15: UTAH COUNTY
U.P.R.R. & US-89 OVERPASS
SITUATION AND LAYOUT 3 OF 3

PROJECT NUMBER SP-15-6(52)241

UTAH
COUNTY

C-343W2
DRG. NO.

SHT. 3 OF 35

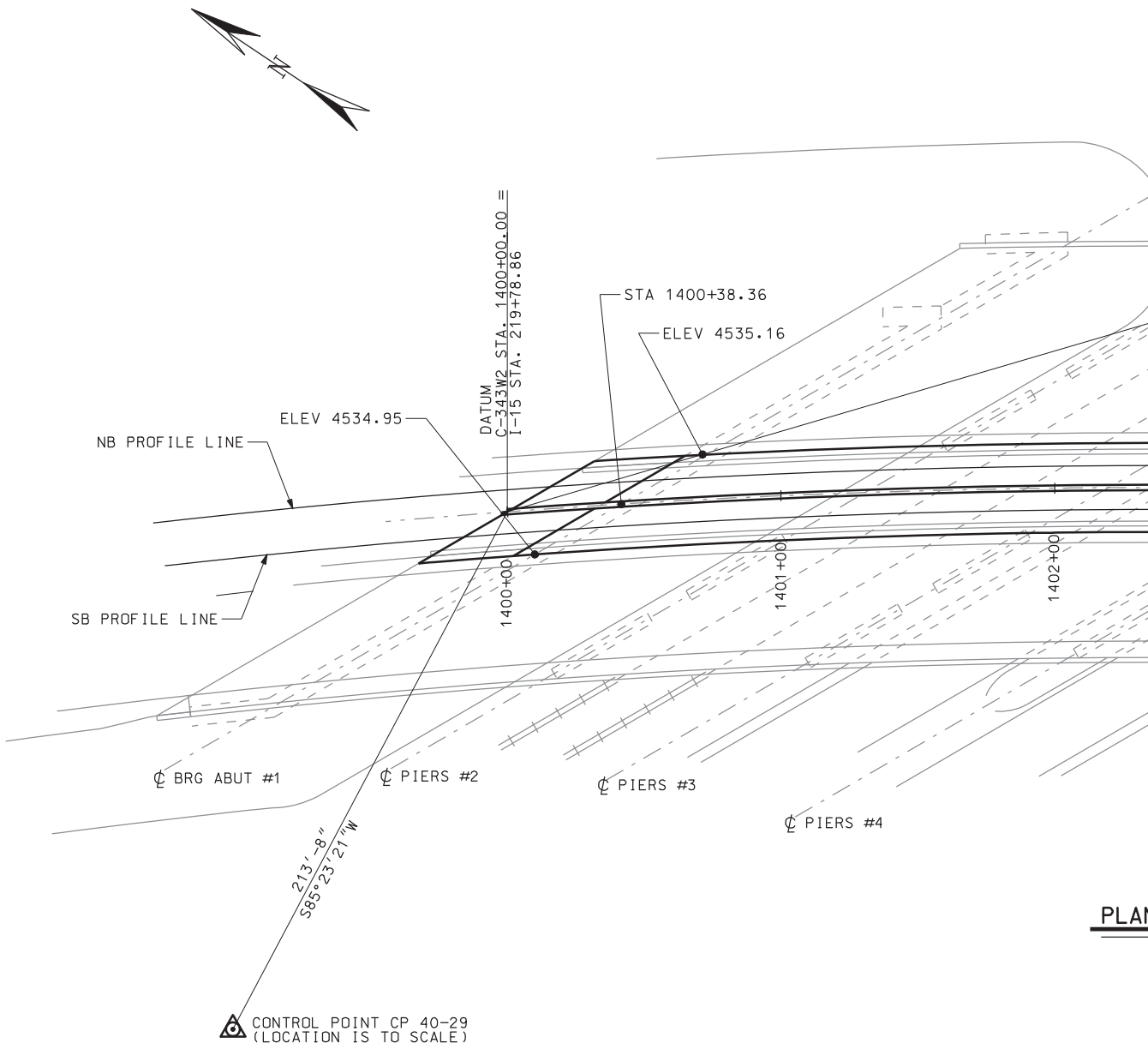


PLAN

## C-343W2 CONTROL POINTS

| POINT | NORTHING | EASTING | ELEVATION |
|---|---|---|---|
| CP 40-29 | 116005.948 | 181163.512 | 4503.982 |
| CP 40-30 | 115493.379 | 181983.982 | 4504.088 |

DGN File:IP_PWPcdms1717\4433_C343-04_Survey Control.dgn
02-MAY-2005

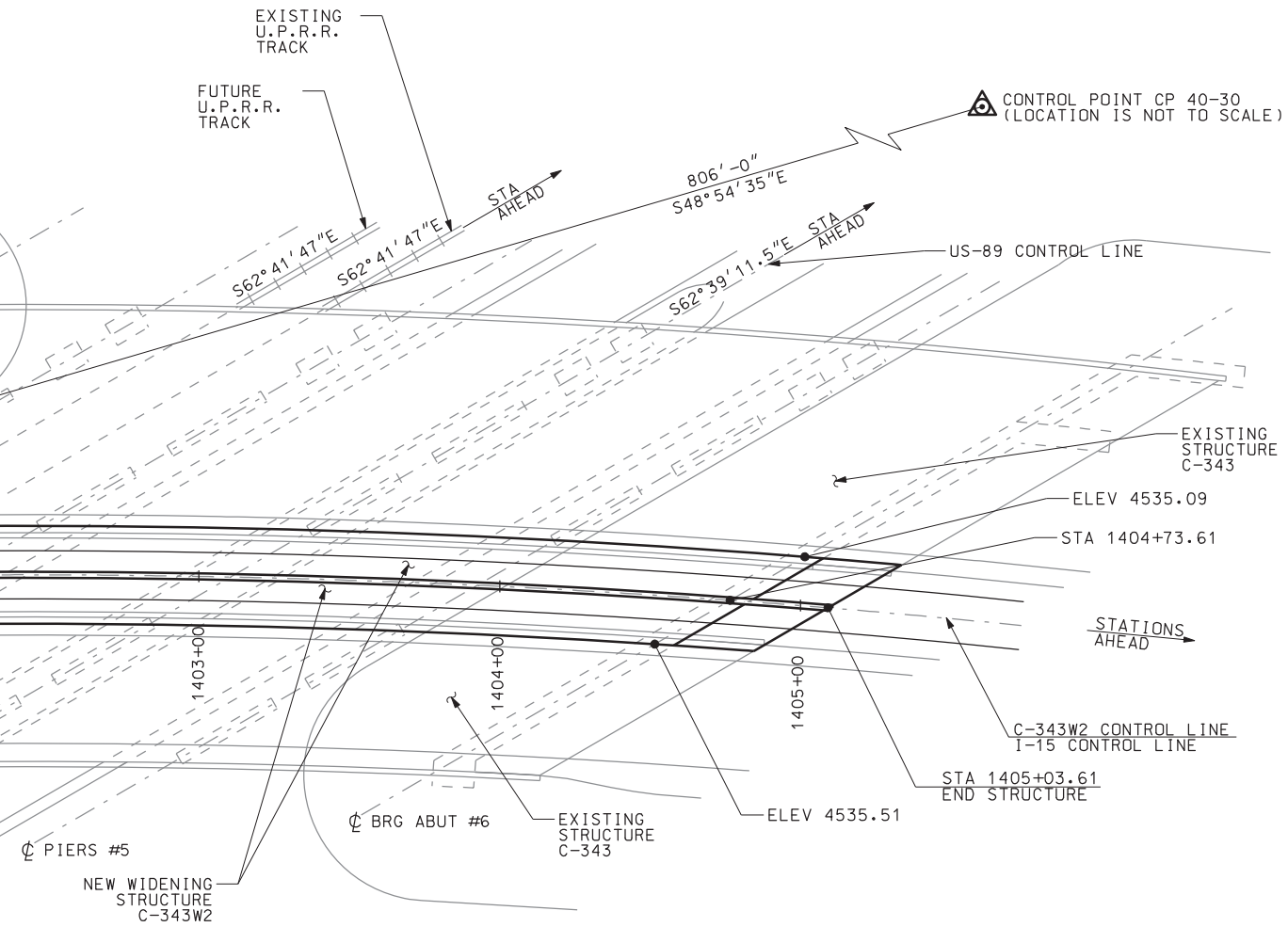


## NOTES

1. ALL DECK, APPROACH SLAB, AND PROFILE GRADE ELEVATIONS ARE AT TOP OF CONCRETE.
2. C-343W2 CONTROL LINE IS DEFINED BY THE HORIZONTAL CURVE DATA AND THE PI STATION SHOWN ON SITUATION AND LAYOUT SHEET 2 OF 3. DATUM STATION IS IDENTIFIED FROM SURVEY CONTROL POINTS.
3. PROFILE GRADE LINE ELEVATIONS WERE CALCULATED USING A BEST FIT VERTICAL CURVE AND FROM SURVEY OF EXISTING EDGE OF DECK.
4. EXISTING TOP OF CONCRETE ELEVATIONS MAY VARY FROM THOSE DETERMINED BY USING NEW PROFILE GRADE LINE.
5. USE NEW PROFILE GRADE LINE ELEVATIONS FOR NEW CONSTRUCTION.
6. CONTRACTOR TO FIELD VERIFY ELEVATIONS AND LOCATIONS.
7. ELEVATIONS SHOWN ARE AT TOP OF CONCRETE AT CENTER OF EXISTING GIRDER AND ABUTMENT BEARINGS.

| NO. | DATE | BY | REMARKS |
|---|---|---|---|

REVISIONS

UTAH DEPARTMENT OF TRANSPORTATION
SALT LAKE CITY, UTAH
STRUCTURES DIVISION

Baker

DESIGN JPD 12/04 CHECK AW 12/04
DRAWN GCK 12/04 CHECK MSA 12/04
QUANT. CHECK

APPROVAL RECOMM. DATE DESIGN ENGR.
APPROVED FOR USE BY UDOT DATE UDOT BRIDGE ENGR.

I-15: UTAH COUNTY
U.P.R.R. & US-89 OVERPASS
SURVEY CONTROL SHEET

PROJECT NUMBER SP-15-6(52)241

UTAH
COUNTY

C-343W2
DRG. NO.

SHT. 4 OF 35

# DRILL HOLE LOG

## BORING NO. 04-1

Sheet: 1 of 1

PROJECT: I-15, CORRIDOR IN UTAH COUNTY - STRUCTURE C343 PROJECT NO.: 200401.045
CLIENT: UTAH DEPARTMENT OF TRANSPORTATION DATE: 8/18/04
LOCATION: SEE SITE PLAN: N 115696, E 181598 ELEVATION: 4503.1'
DRILLER: D. SAMPSON, A. HARTVIGSEN LOGGED BY: M.H., V.N.B.
EQUIP./DRILL METHOD: CME-55 / N.W. CASING
DEPTH TO WATER - INITIAL: ▽ 12.5' AFTER 24 HOURS: ▽ 10.1' 8/25/04

| Elev. (Feet) | Depth (Feet) | Lithology | Sample Type | Sample Rec. (In.) | Blows Per 6" & Torvane (tsf) | USCS (AASHTO) | Material Description | Dry Density, pcf | Moisture Content, % | Atter. Liquid Limit, % | Atter. Plasticity Index, % | Gradation Gravel, % | Gradation Sand, % | Gradation Silt/Clay, % | Other Tests |
|---|---|---|---|---|---|---|---|---|---|---|---|---|---|---|---|
| 4500 | | | | - | 8,7,7 | SM | SILTY SAND | | | | | | | | |
| | 5 | | | 14 | 2,2,2 0.28 | ML (A-4(8)) | brown; gray-brown, moist, firm — SILT | | 29.3 | 52 | 8 | 0 | 3 | 97 | |
| 4495 | | | | 15 | Pushed 0.89 | CL (A-7-5(14)) | lt. brown, moist, stiff | 98.0 | 27.5 | 44 | 23 | 0 | 1 | 99 | CT UC |
| | 10 | | | 16 | 6,7,10 0.70 | CL | brown to gray-brown, moist to wet, stiff — LEAN CLAY | | | | | | | | |
| 4490 | | | | | | | | | | | | | | | |
| | 15 | | | 18 | Pushed 0.70 | CL-ML (A-4(8)) | brown to gray-brown, wet, stiff — SILTY CLAY w/rusty-brown silty sand lenses 18" apart | 108.2 | 20.9 | 24 | 5 | 0 | 15 | 85 | CT UC |
| 4485 | | | | | | | | | | | | | | | |
| | 20 | | | 16 | 4,8,12 0.59 | CL SM | brown, moist, stiff; brown, wet — SILTY SAND | | | | | | | | |
| 4480 | | | | | | | | | | | | | | | |
| | 25 | | | 13 | Pushed | CL (A-6(8)) | gray, moist, stiff | | 22.3 | 32 | 11 | 0 | 6 | 94 | UC |
| 4475 | | | | | | | | | | | | | | | |
| | 30 | | | 18 | 4,9,7 0.68 | CL (A-6(8)) | dk. gray, moist to wet, stiff — LEAN CLAY W/SILTY SAND LENSES | | 21.5 | 34 | 11 | 0 | 4 | 96 | |
| 4470 | | | | | | | | | | | | | | | |
| | 35 | | | 18 | Pushed | CL (A-6(8)) | dk. gray, moist, stiff | 100.0 | 24.5 | 33 | 13 | 0 | 3 | 97 | CT UC |
| 4465 | | | | | | | | | | | | | | | |
| | 40 | | | 10 | 6,12,28 | SM (A-3) | dk. to green-gray, wet, dense, 1.5" clay layer — SILTY SAND | | 20.2 | | NP | 2 | 83 | 15 | |
| 4460 | | | | | | | | | | | | | | | |
| | 45 | | | 13 | 19,28,26 | SM (A-3) | gray-brown, wet, very dense | | 19.7 | | NP | 0 | 85 | 15 | DS |
| 4455 | | | | | | | | | | | | | | | |
| | 50 | | | 11 | 27,37,39 | GM (A-1-a) | gray-brown, wet, dense — SILTY GRAVEL W/SAND | | 7.5 | | NP | 51 | 36 | 13 | |

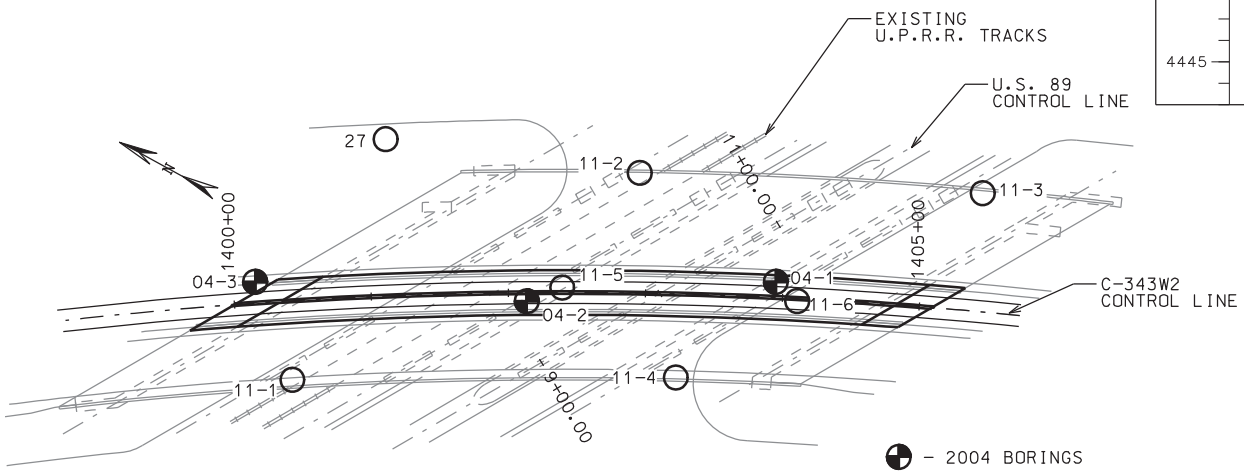


LOCATION PLAN

DRILL HOLE

BORING NO.

Sheet: 1 of 1

DGN File: IP_PWPcdns1717\4433_C343-05_Soil Data1of2.dgn

02-MAY-2005

LOG

04-2

PROJECT: I-15, CORRIDOR IN UTAH COUNTY - STRUCTURE C343 PROJECT NO.: 200401.045
CLIENT: UTAH DEPARTMENT OF TRANSPORTATION DATE: 8/19/04
LOCATION: SEE SITE PLAN: N 115843, E 181487 ELEVATION: 4503.0'
DRILLER: D. SAMPSON, A. HARTVIGSEN LOGGED BY: M.H., V.N.B.
EQUIP./DRILL METHOD: CME-55 / N.W. CASING
DEPTH TO WATER - INITIAL: ▽ 12.5' AFTER 24 HOURS: ▽ 10.5' 8/25/04

| SAMPLE Type | Rec. (in.) | Blows Per 6" & Torvane (tsf) | USCS (AASHTO) | Material Description | | Dry Density, pcf | Moisture Content, % | Atter. Liquid Limit, % | Atter. Plasticity Index, % | Gradation Gravel, % | Gradation Sand, % | Gradation Silt/Clay, % | Other Tests |
|---|---|---|---|---|---|---|---|---|---|---|---|---|---|
| | 16 | 10,20,15 | SM | dk. gray-brown, dry, med. dense | SILTY SAND | | | | | | | | |
| | | | GP-GM | brown | POORLY GRADED GRAVEL W/SILT & SAND (fill) | | | | | | | | |
| | 16 | 3,4,3 0.45 | CL-ML | gray-brown | SILTY CLAY | | | | | | | | |
| | | | CL | lt. brown, wet, soft | LEAN CLAY W/SILTY SAND LENSES | | | | | | | | |
| | 0 | Pushed | - | | | | | | | | | | |
| | 14 | Pushed | CL (A-4(8)) | | | | 13.4 | 31 | 10 | 0 | 21 | 79 | UC |
| | 14 | 3,5,5 0.40 | SM | brown, wet, loose | SILTY SAND | | | | | | | | |
| | 17 | Pushed | SM | brown | | | | | | | | | |
| | 16 | 3,5,6 0.72 | CL | lt. brown, wet, stiff | | | | | | | | | |
| | 13 | Pushed | CL (A-4(8)) | brown, moist, stiff | | | 22.8 | 30 | 9 | 0 | 2 | 98 | UC |
| | 17 | 5,6,8 0.41 | CL | dk. gray, moist, firm to stiff | LEAN CLAY W/SILTY SAND LAYERS TO 4" THICK | | | | | | | | |
| | 18 | 3,4,6 0.42 | CL | dk. blackish-gray, moist, firm to stiff | | | | | | | | | |
| | 9 | Pushed 0.40 | CL-ML (A-4(8)) | blackish-gray, moist, firm | | 108.7 | 20.6 | 28 | 6 | 0 | 5 | 95 | CT UC |
| | 18 | 2,2,4 0.44 | CL | dk. blackish-gray, moist to wet, firm | SILTY CLAY | | | | | | | | |
| | | | | 6" silty sand layer | | | | | | | | | |
| | 15 | 9,3,4 0.54 | CL | dk. gray, moist, stiff | | | | | | | | | |
| | 13 | 20,26,33 | SM (A-1-b) | gray-brown, wet, dense | SILTY SAND W/GRAVEL | | 12.5 | | NP | 19 | 62 | 19 | |
| | 13 | 48,45,49 | GM | gray-brown, wet, dense | | | | | | | | | |
| | 10 | 36,56/4" | GM | gray-brown, wet, dense | SILTY GRAVEL W/SAND | | | | | | | | |

# KEY TO BORING LOG

## SYMBOLS

2,3,2 ← Blow Count per 6"
0.45 ← Torvane (tsf)
Disturbed Sample
Undisturbed Sample
Groundwater Elevation

UC = Unconfined Compression Test
CT = Consolidation Test
SG = Specific Gravity Test
DS = Direct Shear Test

## RELATIVE DENSITY (NON-PLASTIC - SAND & SILT)

VERY LOOSE N<4
LOOSE N 4-10
MED DENSE N 10-30
DENSE N 30-50
VERY DENSE N>50

## CONSISTENCY (PLASTIC - SILT & CLAY)

VERY SOFT N<2
SOFT N 2-4
MEDIUM STIFF N 4-8
STIFF N 8-15
VERY STIFF N 15-30
HARD N>30

## GENERAL NOTES

1. THE SUBSURFACE EXPLORATIONS SHOWN WERE CONDUCTED BETWEEN 08-18-04 AND 08-26-04 BY RB&G ENGINEERING, INC..
2. THESE BORING LOGS REPRESENT A SYNOPSIS OF THE SOIL DEPOSITS ENCOUNTERED WITHIN EACH BORING AND ARE BASED ON SOUND GEOLOGICAL AND ENGINEERING JUDGMENT. BECAUSE SOIL IS A COMPLEX MEDIUM, THESE BORING LOGS MAY OR MAY NOT REPRESENT THE SOIL CONDITIONS AT THIS SITE. THIS SUBSURFACE INTERPRETATION IS PRESENTED IN GOOD FAITH AND IS NOT INTENDED AS A SUBSTITUTE FOR PERSONAL INVESTIGATION AND JUDGEMENT OF THE CONTRACTOR.
3. THE WATER LEVELS AND CONDITIONS INDICATED ON THE BORING LOGS REPRESENT HOLE CONDITIONS ON THE DATE SHOWN, HOWEVER, IT SHOULD BE NOTED, THAT AT LOCATIONS AWAY FROM THE BORINGS OR AT ANOTHER TIME THE WATER LEVELS AND CONDITIONS MAY VARY SIGNIFICANTLY.
4. THE STRATIFICATION LINES REPRESENT THE APPROXIMATE BOUNDARIES BETWEEN SOIL TYPES AND THE TRANSITION MAY BE GRADUAL.
5. COBBLE - A ROCK WITH AN AVERAGE DIMENSION BETWEEN 3 INCHES AND 12 INCHES
6. BOULDER - A ROCK WITH AN AVERAGE DIMENSION OF 12 INCHES OR GREATER

NOTE: DRILL RIG USED - CME 55
HAMMER E=0.75

GEOTECHNICAL ENGINEER

| NO. | DATE | BY | REMARKS |
|---|---|---|---|
| | | | REVISIONS |

UTAH DEPARTMENT OF TRANSPORTATION
SALT LAKE CITY, UTAH
STRUCTURES DIVISION
RB&G ENGINEERING INC.

DESIGN BEP 10/04 CHECK
DRAWN JPN 10/04 CHECK
QUANT. CHECK

APPROVAL RECOMM. DATE DESIGN ENGR.
APPROVED FOR USE BY UDOT DATE UDOT BRIDGE ENGR.

I-15; CORRIDOR IN UTAH COUNTY
U.P.R.R. & US-89 OVERPASS IN LEHI
SOIL DATA SHEET 1 OF 2
PROJECT NUMBER SP-15-6(52)241

UTAH
COUNTY

C-343W2
DRG. NO.

SHT. 5 OF 35

# DRILL HOLE LOG

## BORING NO. 04-3

Sheet: 1 of 1

PROJECT: I-15, CORRIDOR IN UTAH COUNTY - STRUCTURE C343 PROJECT NO.: 200401.045
CLIENT: UTAH DEPARTMENT OF TRANSPORTATION DATE: 8/26/04
LOCATION: SEE SITE PLAN: N 115993, E 181422 ELEVATION: 4536.5'
DRILLER: B. HARTLEY, J. MOHLER LOGGED BY: M.H., V.N.B.
EQUIP./DRILL METHOD: CME-55 / N.W. CASING
DEPTH TO WATER - INITIAL: ▽ 28.0' AFTER 24 HOURS: ▽ NOT MEASURED

| Elev. (Feet) | Depth (Feet) | Lith-ology | Sample Type | Sample Rec. (In.) | Sample Blows Per 6" & Torvane (tsf) | USCS (AASHTO) | Material Description | | Dry Density, pcf | Moisture Content, % | Atter. Liquid Limit, % | Atter. Plasticity Index, % | Gradation Gravel, % | Gradation Sand, % | Gradation Silt/Clay, % | Other Tests |
|---|---|---|---|---|---|---|---|---|---|---|---|---|---|---|---|---|
| | | | | | | | 5" ASPHALT<br>12" CONCRETE W/REBAR | | | | | | | | | |
| 4535 | | | ■ | 11 | 11,10,11 | SM | brown, slightly moist, med. dense | | | | | | | | | |
| | 5 | | ■ | 14 | 7,6,7 | SM | brown, slightly moist, med. dense | | | | | | | | | |
| 4530 | | | | | | | | w/some gravel | | | | | | | | |
| | | | ■ | 13 | 13,20,18 | SM | brown, slightly moist, med. dense | | | | | | | | | |
| | 10 | | | | | | | SILTY SAND (fill) | | | | | | | | |
| 4525 | | | ■ | 13 | 11,13,11 | SM | brown, slightly moist, med. dense | | | | | | | | | |
| | 15 | | | | | | | some coarse sand & fine gravel | | | | | | | | |
| 4520 | | | ■ | 12 | 9,15,20 | SM | brown, slightly moist, med. dense | | | | | | | | | |
| | 20 | | | | | | | | | | | | | | | |
| 4515 | | | ■ | 12 | 14,31,23 | SM | brown, slightly moist, dense | | | | | | | | | |
| | 25 | | | | | | | | | | | | | | | |
| 4510 | | | | | | | | some clay | | | | | | | | |
| | | | ■ | 12 | 47,45,42 | SM | brown, slightly moist, very dense, w/some gravel | | | | | | | | | |
| | 30 | | | | | | | | | | | | | | | |
| 4505 | | | | | | | | | | | | | | | | |
| | | | ■ | 12 | 18,24,12<br>0.25 | SP-SM<br>CL | gray-brown, moist to wet, dense, fine to coarse | SAND W/SILT & GRAVEL | | | | | | | | |
| | 35 | | | | | | black to gray, slightly moist, w/trace of organics, slight organic odor | SANDY LEAN CLAY | | | | | | | | |
| 4500 | | | | | | | | | | | | | | | | |
| | | | ☒ | 12 | Pushed<br>0.25 | ML<br>(A-4(8)) | lt. gray-brown, slightly moist, soft to firm | SILT | 97.1 | 28.0 | 29 | 5 | 0 | 4 | 96 | UC |
| | 40 | | | | | | | | | | | | | | | |
| 4495 | | | | | | | | | | | | | | | | |
| | | | ■ | 18 | 6,9,12<br>0.73 | CL | gray-brown, moist, stiff, 2" clayey sand layer | | | | | | | | | |
| | 45 | | | | | | | SANDY LEAN CLAY | | | | | | | | |
| 4490 | | | | | | | | | | | | | | | | |
| | | | ☒ | 15 | Pushed<br>0.62 | CL | brown, moist, stiff | | | | | | | | | |
| | 50 | | ■ | 16 | 6,11,14 | SM | gray-brown, moist, med. dense | SILTY SAND | | | | | | | | |
| 4485 | | | | | | | | | | | | | | | | |
| | | | ■ | 17 | 3,3,3<br>0.77<br>0.32 | CL | brown, moist, stiff<br>dk. gray, moist, firm | | | | | | | | | |
| | 55 | | | | | | | LEAN CLAY | | | | | | | | |
| 4480 | | | | | | | | | | | | | | | | |
| | | | ☒ | - | Pushed | SM | gray | SILTY SAND | | | | | | | | |
| | 60 | | ■ | - | 6,9,11<br>0.34 | CL | gray, wet, firm | | | | | | | | | |
| 4475 | | | | | | | | | | | | | | | | |
| | | | ☒ | 18 | Pushed<br>0.51 | CL<br>(A-6(9)) | gray, wet, stiff | LEAN CLAY | 106.6 | 22.9 | 35 | 12 | 0 | 1 | 99 | UC |
| | 65 | | | | | | | | | | | | | | | |
| 4470 | | | | | | | | | | | | | | | | |
| | | | ☒ | 15 | Pushed | CL | gray, wet, stiff | | | | | | | | | |
| | 70 | | ■ | 16 | 3,10,22 | SM | gray, wet, dense | SILTY SAND W/SOME CLAY LAYERS 3" TO 6" THICK | | | | | | | | |
| 4465 | | | | | | | | | | | | | | | | |
| | | | ■ | 8 | 47,47/4" | GP-GM | brown, wet, dense | | | | | | | | | |
| | 75 | | | | | | | | | | | | | | | |

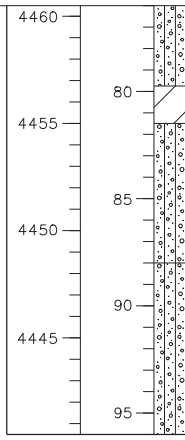


DGN File: IP_PWPcdms1717\4433_C343-06_SoilData2of2.dgn

02-MAY-2005

| | | | | | |
|---|---|---|---|---|---|
| | | | | | GRAVEL W/SAND & SILT |
| 11 | 31,16,7<br>0.54 | GP-GM<br>CL | brown,<br>wet, dense | | |
| | | | brown,<br>wet, stiff | | LEAN CLAY |
| 10 | 29,45,39 | GM | brown,<br>wet, dense | | SILTY GRAVEL W/SAND |
| | | | dense | | SILTY GRAVEL W/SAND TO<br>SILTY SAND W/GRAVEL<br>coarse to fine sand |

# KEY TO BORING LOG

## SYMBOLS

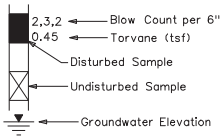


UC = Unconfined Compression Test
CT = Consolidation Test
SG = Specific Gravity Test
DS = Direct Shear Test

## RELATIVE DENSITY (NON-PLASTIC - SAND & SILT)

VERY LOOSE N<4
LOOSE N 4-10
MED DENSE N 10-30
DENSE N 30-50
VERY DENSE N>50

## CONSISTENCY (PLASTIC - SILT & CLAY)

VERY SOFT N<2
SOFT N 2-4
MEDIUM STIFF N 4-8
STIFF N 8-15
VERY STIFF N 15-30
HARD N>30

## GENERAL NOTES

1. THE SUBSURFACE EXPLORATIONS SHOWN WERE CONDUCTED BETWEEN 08-18-04 AND 08-26-04 BY RB&G ENGINEERING, INC..
2. THESE BORING LOGS REPRESENT A SYNOPSIS OF THE SOIL DEPOSITS ENCOUNTERED WITHIN EACH BORING AND ARE BASED ON SOUND GEOLOGICAL AND ENGINEERING JUDGMENT. BECAUSE SOIL IS A COMPLEX MEDIUM, THESE BORING LOGS MAY OR MAY NOT REPRESENT THE SOIL CONDITIONS AT THIS SITE. THIS SUBSURFACE INTERPRETATION IS PRESENTED IN GOOD FAITH AND IS NOT INTENDED AS A SUBSTITUTE FOR PERSONAL INVESTIGATION AND JUDGEMENT OF THE CONTRACTOR.
3. THE WATER LEVELS AND CONDITIONS INDICATED ON THE BORING LOGS REPRESENT HOLE CONDITIONS ON THE DATE SHOWN, HOWEVER, IT SHOULD BE NOTED, THAT AT LOCATIONS AWAY FROM THE BORINGS OR AT ANOTHER TIME THE WATER LEVELS AND CONDITIONS MAY VARY SIGNIFICANTLY.
4. THE STRATIFICATION LINES REPRESENT THE APPROXIMATE BOUNDARIES BETWEEN SOIL TYPES AND THE TRANSITION MAY BE GRADUAL.
5. COBBLE - A ROCK WITH AN AVERAGE DIMENSION BETWEEN 3 INCHES AND 12 INCHES
6. BOULDER - A ROCK WITH AN AVERAGE DIMENSION OF 12 INCHES OR GREATER

NOTE: DRILL RIG USED - CME 55
HAMMER E=0.75

GEOTECHNICAL ENGINEER

| NO. | DATE | BY | REMARKS |
|---|---|---|---|

REVISIONS

UTAH DEPARTMENT OF TRANSPORTATION
SALT LAKE CITY, UTAH
STRUCTURES DIVISION
RB&G ENGINEERING INC.

DESIGN BEP 10/04 CHECK
DRAWN JPN 10/04 CHECK
QUANT. CHECK

APPROVAL RECOMM. DATE DESIGN ENGR.
APPROVED FOR USE BY UDOT DATE UDOT BRIDGE ENGR.

I-15; CORRIDOR IN UTAH COUNTY
U.P.R.R. & US-89 OVERPASS IN LEHI
SOIL DATA SHEET 2 OF 2
PROJECT NUMBER SP-15-6(52)241

UTAH
COUNTY
C-343W2
DRG. NO.

SHT. 6 OF 35

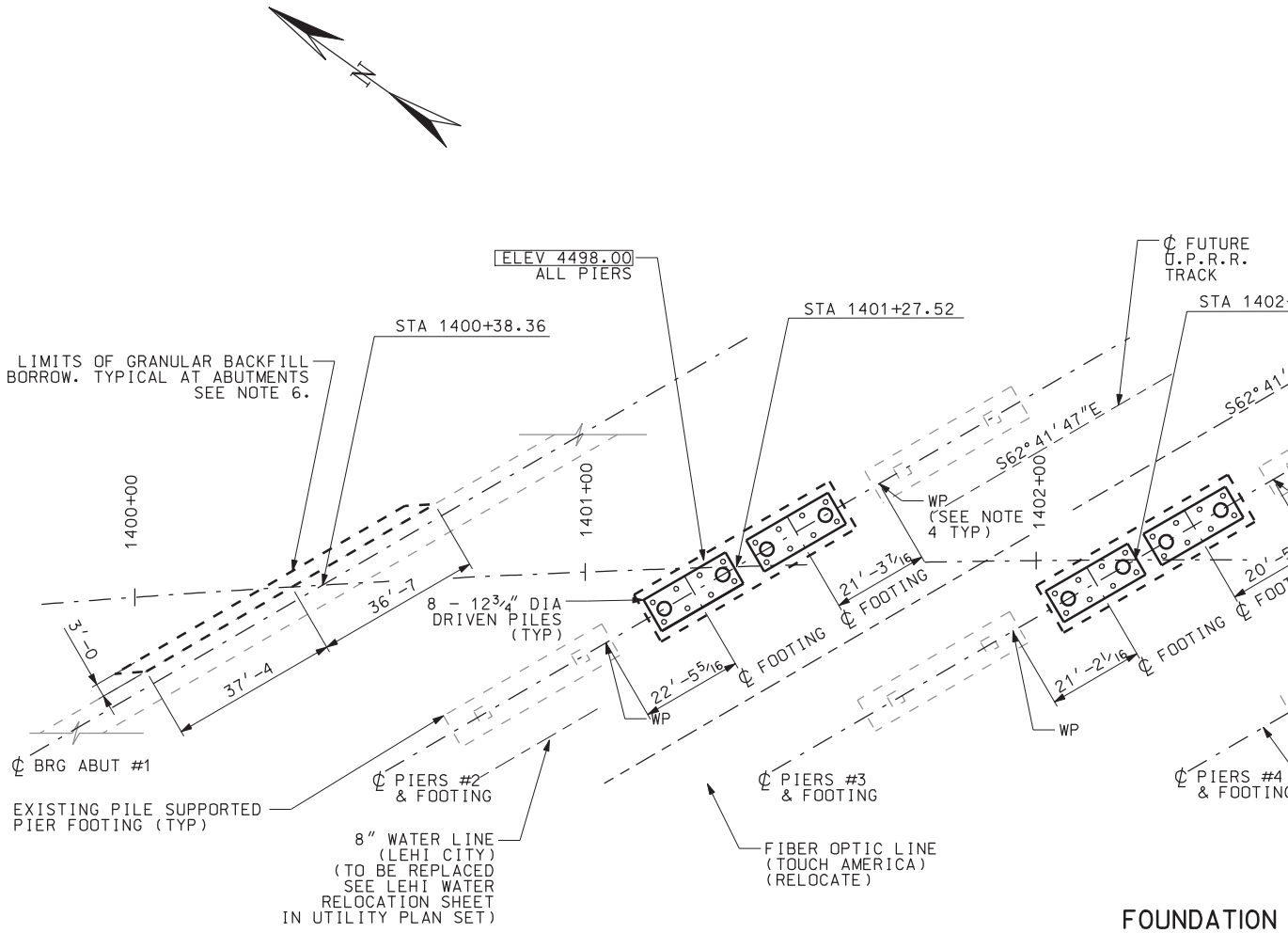


## FOUNDATION

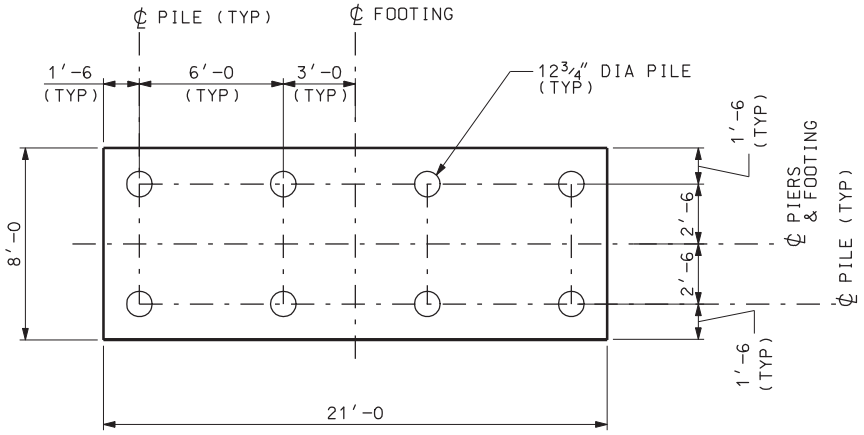


## FOOTING DETAIL

(TYP ALL FOOTINGS)

DGN File: IP_PWPcdms1717\4433_C343-07_FndPln.dgn

02-MAY-2005

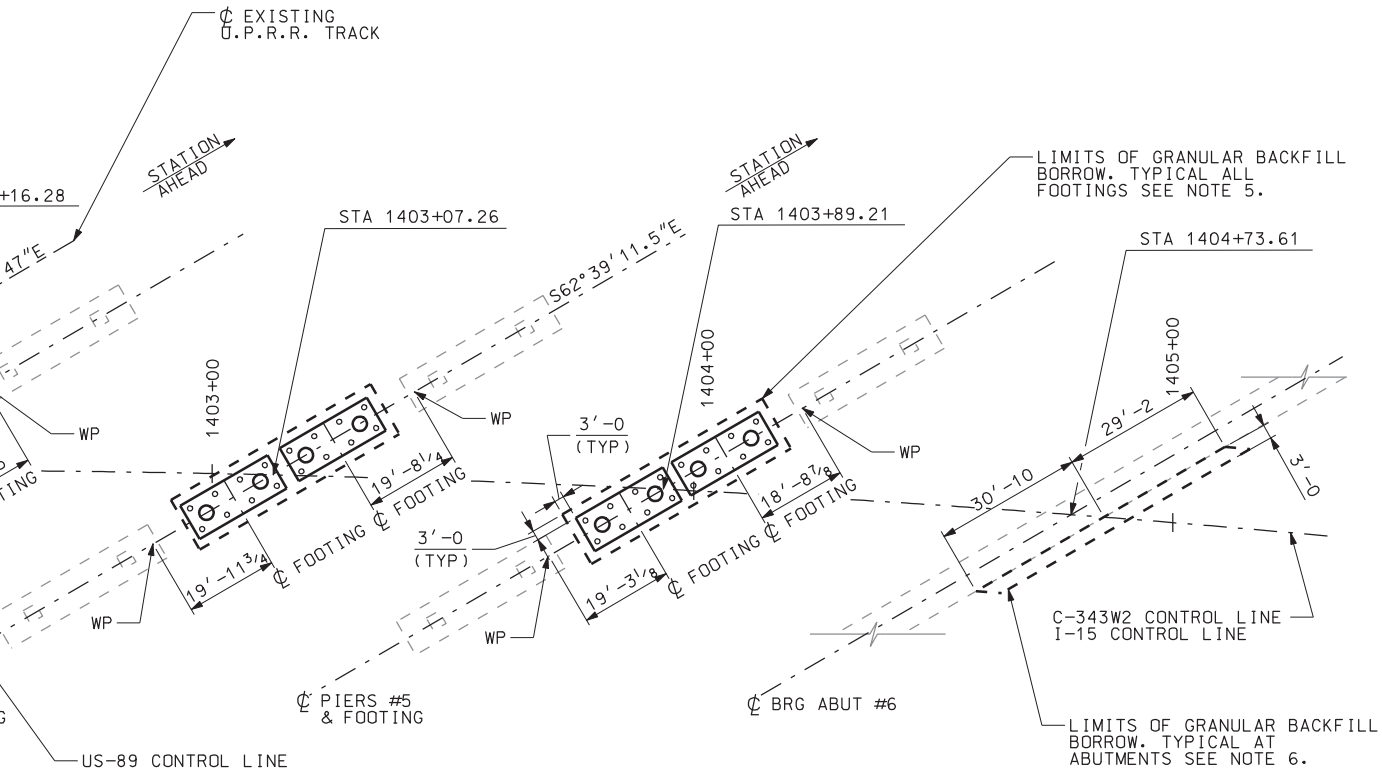


## PLAN

| QUANTITIES GRANULAR BACKFILL BORROW | |
|---|---|
| PIERS | 243.2 CY |
| ABUTMENTS | 30.0 CY |

## NOTES

1. ELEVATIONS AT THE BOTTOM OF FOOTING ARE SHOWN ENCLOSED IN RECTANGLES = ELEV 1000.00 .
2. SEE DRIVEN PILE DETAILS SHEET FOR PILE DETAILS.
3. LOCATE ℄ NEW COLUMNS AS AN EXTENSION OF THE BEARING ALONG ℄ EXISTING COLUMNS.
4. WORKING POINTS (WP) ARE LOCATED AT ℄ PIER CAP AT INTERSECTION OF ℄ EXISTING FACIA GIRDERS.
5. PLACE 8" OF GRANULAR BORROW BELOW BASE OF FOOTING EXTENDING 3'-0 OUTSIDE EDGE OF FOOTING. CONTINUE GRANULAR BORROW UP TO TOP OF FOOTING.
6. VERTICAL LIMITS OF GRANULAR BACKFILL BORROW AT ABUTMENTS ARE FROM ABUTMENT BACKWALL CONSTRUCTION JOINT TO BOTTOM OF APPROACH SLAB.
7. SEE UTILITY CONTACT SHEET IN PROJECT PLAN SET FOR A LIST OF UTILITY CONTACT NUMBERS.
8. UTILITIES DESIGNATED AS "RELOCATE" ARE THE DESIGN BUILD RESPONSIBILITY OF THE CONTRACTOR. REFER TO UTILITY RELOCATION (DESIGN BUILD SPECIFICATION 0007285).
9. SEE UT-6 SHEET FOR UTILITIES DATA NOT SHOWN.

| NO. | DATE | BY | REMARKS |
|---|---|---|---|
| | | | |

REVISIONS

UTAH DEPARTMENT OF TRANSPORTATION
SALT LAKE CITY, UTAH
STRUCTURES DIVISION

Baker

DESIGN MSA 12/04 CHECK JPD 12/04
DRAWN GCK 12/04 CHECK AW 12/04
QUANT. JPD 01/05 CHECK AW 01/05

APPROVAL RECOMM. DATE DESIGN ENGR.
APPROVED FOR USE BY UDOT DATE UDOT BRIDGE ENGR.

I-15: UTAH COUNTY
U.P.R.R. & US-89 OVERPASS
FOUNDATION PLAN

PROJECT NUMBER SP-15-6(52)241

UTAH
COUNTY

C-343W2
DRG. NO.

SHT. 7 OF 35

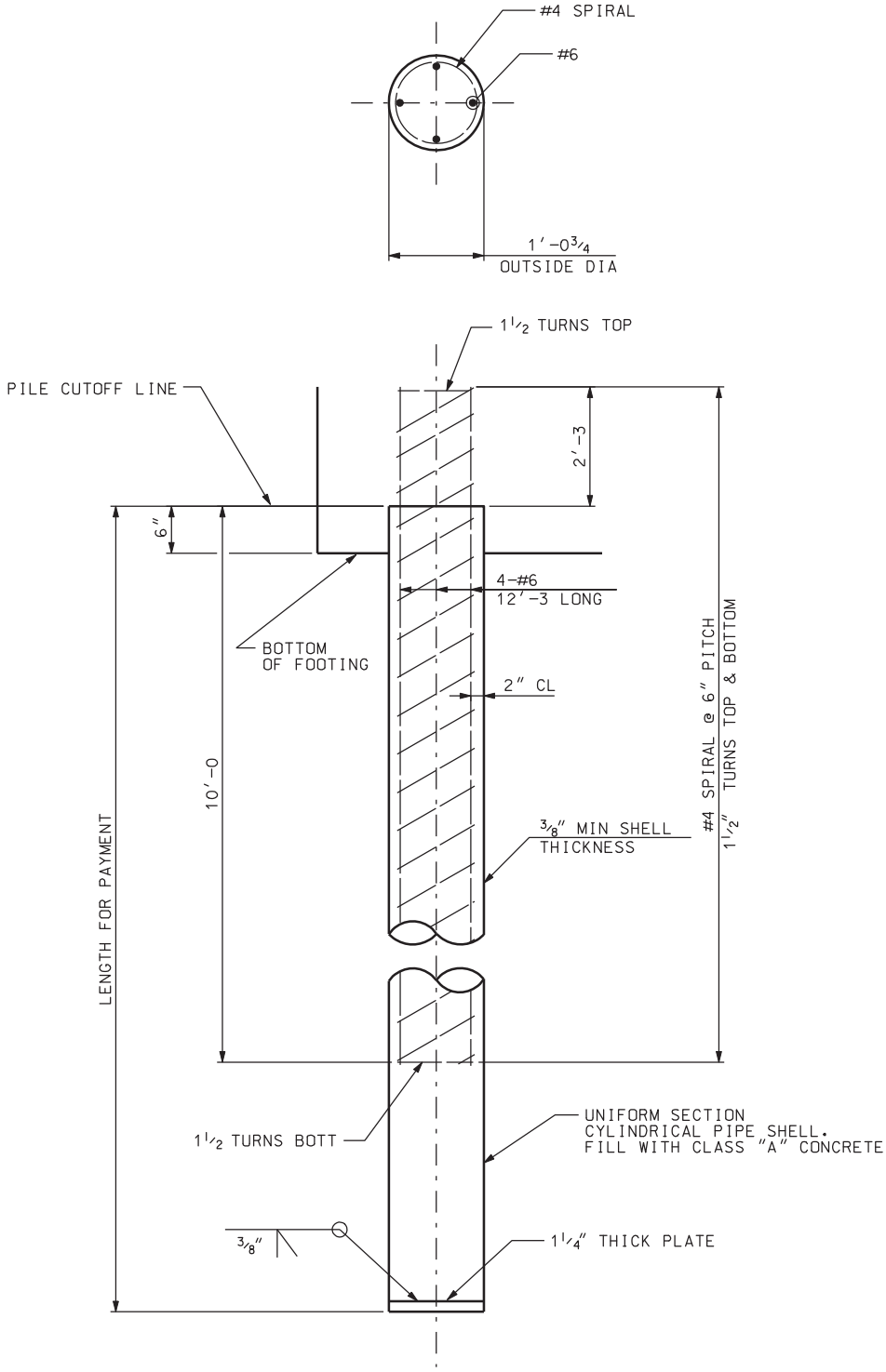


## PIPE PILE DETAIL

| PIL | | | |
|---|---|---|---|
| LOCATION | ESTIMATED PILE TIP ELEV (FEET) | ELEV OF MIN ACCEPTABLE PILE PENETRATION (FEET) | |
| PIER #2 SB | 4452.00 | 4457.00 | |
| PIER #3 SB | 4452.00 | 4457.00 | |
| PIER #4 SB | 4456.00 | 4461.00 | |
| PIER #5 SB | 4456.00 | 4461.00 | |
| PIER #2 NB | 4452.00 | 4457.00 | |
| PIER #3 NB | 4452.00 | 4457.00 | |
| PIER #4 NB | 4456.00 | 4461.00 | |
| PIER #5 NB | 4456.00 | 4461.00 | |

SERVICE I LOADING BASED ON 1" SETTLEMENT

DGN File:IP_PWPcdms1717\4433_C343-08_Pile01.dgn
02-MAY-2005

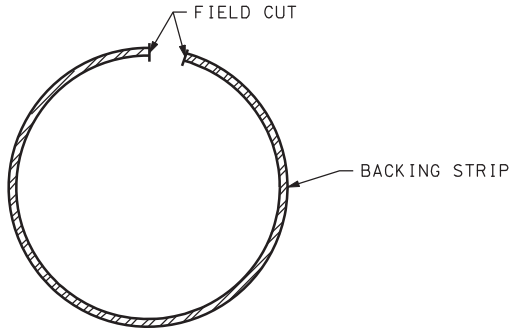


NOTE

FIELD CUT PIECE OF PILE SO WHEN COMPRESSED IT WILL SLIDE INSIDE PILE SECTIONS.

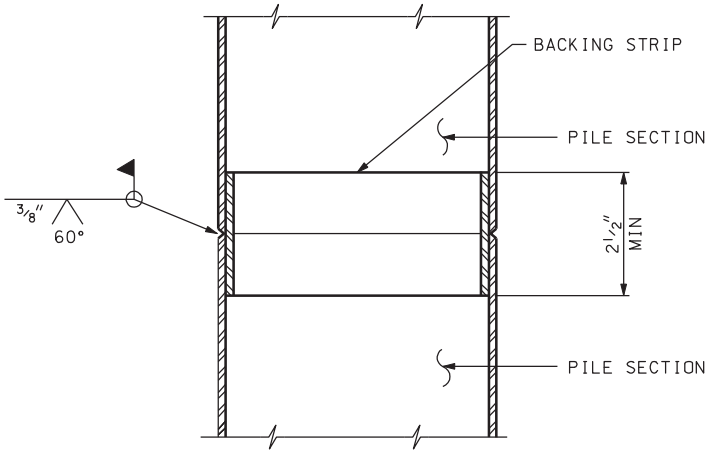


## SPLICE DETAIL

USE FULL STRENGTH WELDED SPLICES.

| QUANTITIES DRIVEN PILES 12 3/4" | |
|---|---|
| PIERS | 2944 FEET |

| E DATA | | | |
|---|---|---|---|
| SERVICE I PILE RESISTANCE (Kips) | STRENGTH I PILE RESISTANCE (Kips) | REQUIRED DRIVING RESISTANCE (Kips) | AS CONST. PILE TIP ELEV (FEET) |
| 240 | 140 | 257 | |
| 240 | 140 | 257 | |
| 240 | 140 | 257 | |
| 240 | 140 | 257 | |
| 240 | 140 | 257 | |
| 240 | 140 | 257 | |
| 240 | 140 | 257 | |
| 240 | 140 | 257 | |

## NOTES

1. FILL PILE SHELLS WITH CLASS "A" CONCRETE.
2. HOLD REINFORCING STEEL ADEQUATELY IN FINAL POSITION DURING PLACEMENT OF CONCRETE AROUND BARS.
3. USE PILES MEETING ASTM A252 GRADE 3 WITH A MINIMUM YIELD STRENGTH OF 45 KSI.
4. PILE TIP ELEVATIONS ARE APPROXIMATE. VERIFY THESE ELEVATIONS AT THE TIME OF CONSTRUCTION IN ACCORDANCE WITH THE SPECIFICATIONS.
5. MINIMUM RATED ENERGY OF THE PILE HAMMER IS 20 KIP-FT

| NO. | DATE | BY | REMARKS |
|---|---|---|---|

REVISIONS

UTAH DEPARTMENT OF TRANSPORTATION
SALT LAKE CITY, UTAH
STRUCTURES DIVISION

Baker

DESIGN MSA 12/04 CHECK JPD 12/04
DRAWN GCK 12/04 CHECK AW 12/04
QUANT. JPD 01/05 CHECK MSA 01/05

APPROVAL RECOMM. DATE DESIGN ENGR.
APPROVED FOR USE BY UDOT DATE UDOT BRIDGE ENGR.

I-15: UTAH COUNTY
U.P.R.R. & US-89 OVERPASS
DRIVEN PILE DETAILS

PROJECT NUMBER SP-15-6(52)241

UTAH
COUNTY

C-343W2
DRG. NO.

SHT. 8 OF 35

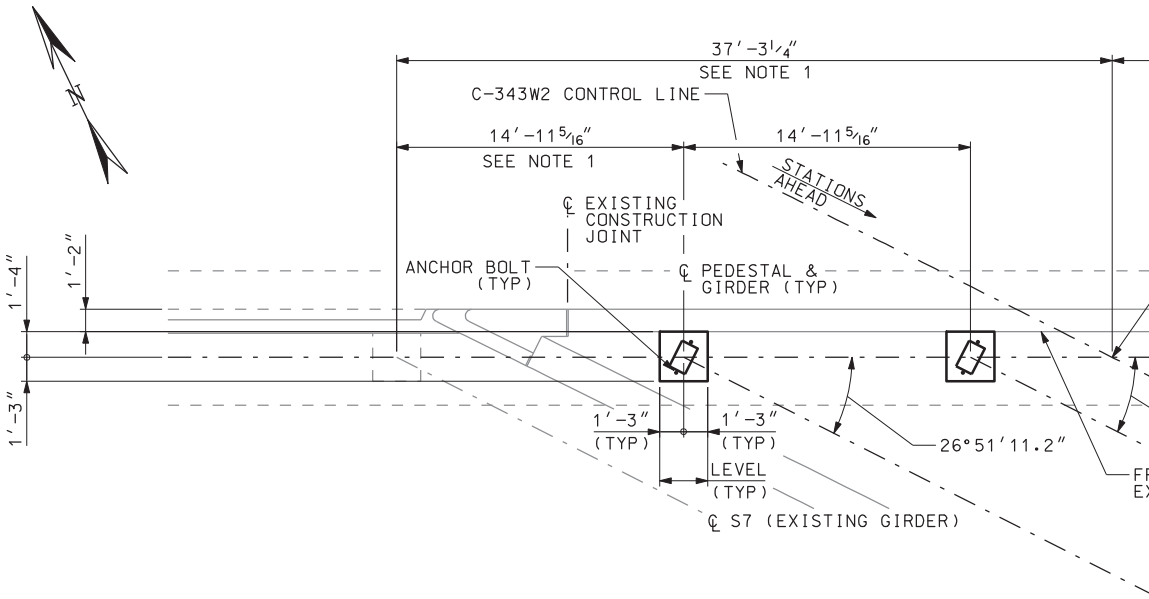


## PLAN

(@ GIRDER SEAT

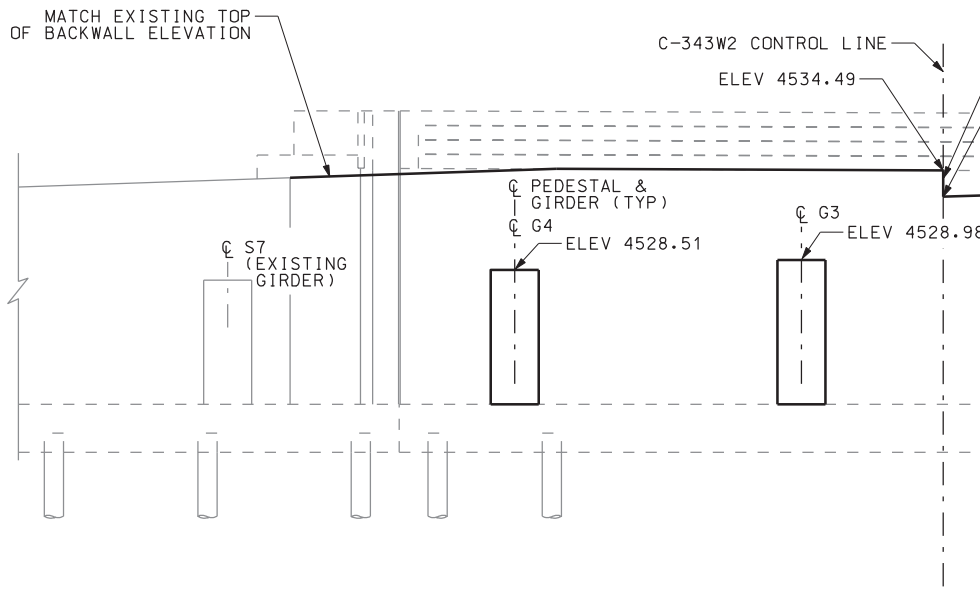


## ELEVATIO

(LOOKING BACK

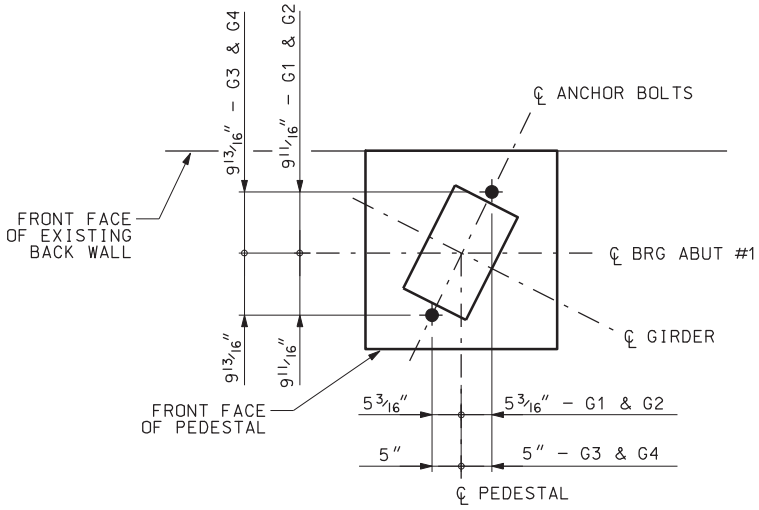


## ANCHOR BOLT LOCATION PLAN

| QUAN |
|---|
| STRUCTUR |
| PEDESTALS |

DGN File:IP_PWPcdns1717\4433_C343-09_Abut1.dgn

02-MAY-2005

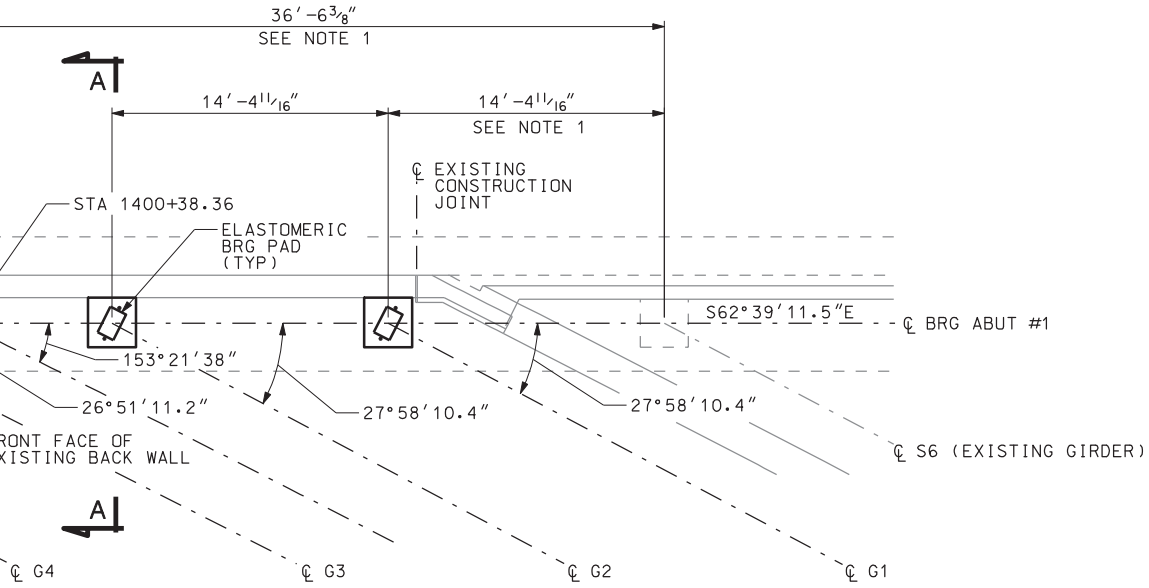


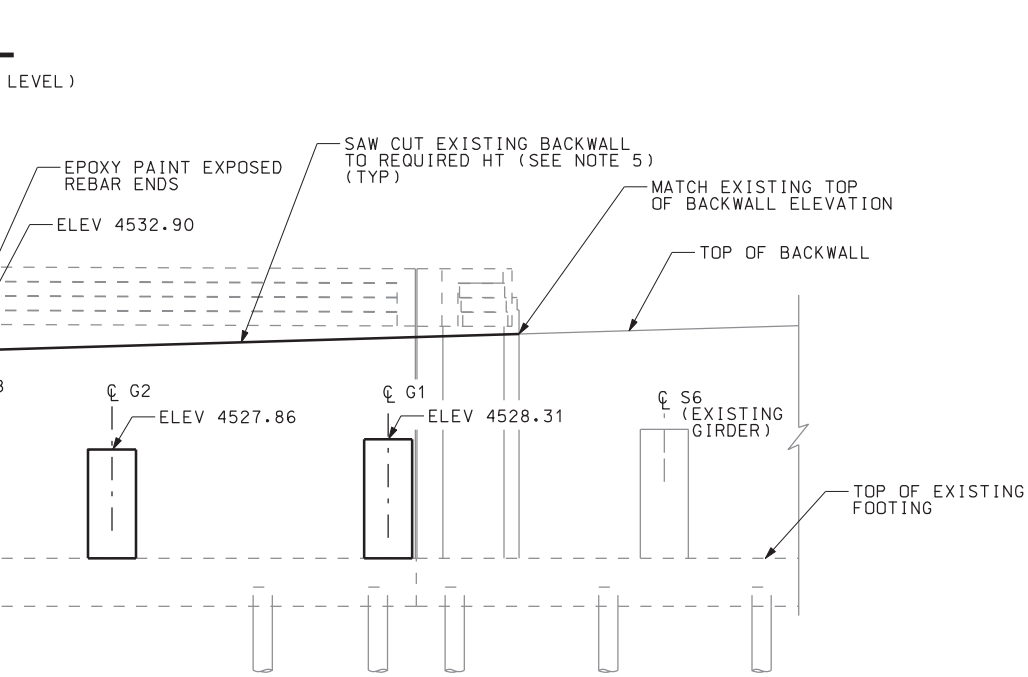


ON

STATION)

| TITIES |
|---|
| RAL CONCRETE |
| 6.0 CY |

## NOTES

1. LOCATE ℄ G1 OFF OF ℄ EXISTING GIRDER S6.
   LOCATE ℄ G4 OFF OF ℄ EXISTING GIRDER S7.
2. SEE ABUTMENT DETAILS SHEET FOR SECTION A-A AND REINFORCEMENT DETAILS.
3. SEE BEARING DETAILS SHEET FOR ELASTOMERIC BEARING PAD DETAILS.
4. FINISH GIRDER BEARING SEAT AREA HIGH (2" LARGER THAN BEARING PAD EACH SIDE) AND RUB OR GRIND LEVEL TO ELEVATIONS SHOWN ± 1/16" (NO GROUTING).
5. IF TOP OF BACKWALL ELEVATION IS BELOW RETAINING WALL FACIA, SAWCUT WALL AT REQUIRED ELEVATION. IF TOP OF BACKWALL ELEVATION IS WITHIN RETAINING WALL FACIA, REMOVE FACIA AT JOINT AND INCREASE DECK AND APPROACH SLAB THICKNESS OVER WALL. SEE APPROACH SLAB DETAILS SHEET.

| NO. | DATE | BY | REMARKS |
|---|---|---|---|
| | | | |

REVISIONS

Baker

UTAH DEPARTMENT OF TRANSPORTATION
SALT LAKE CITY, UTAH
STRUCTURES DIVISION

DESIGN MSA 12/04 CHECK JPD 12/04
DRAWN GCK 12/04 CHECK AW 12/04
QUANT. JPD 01/05 CHECK MSA 01/05

APPROVAL RECOMM. DATE DESIGN ENGR.
APPROVED FOR USE BY UDOT DATE UDOT BRIDGE ENGR.

I-15: UTAH COUNTY
U.P.R.R. & US-89 OVERPASS
ABUTMENT #1

PROJECT NUMBER SP-15-6(52)241

UTAH
COUNTY

C-343W2
DRG. NO.

SHT. 9 OF 35

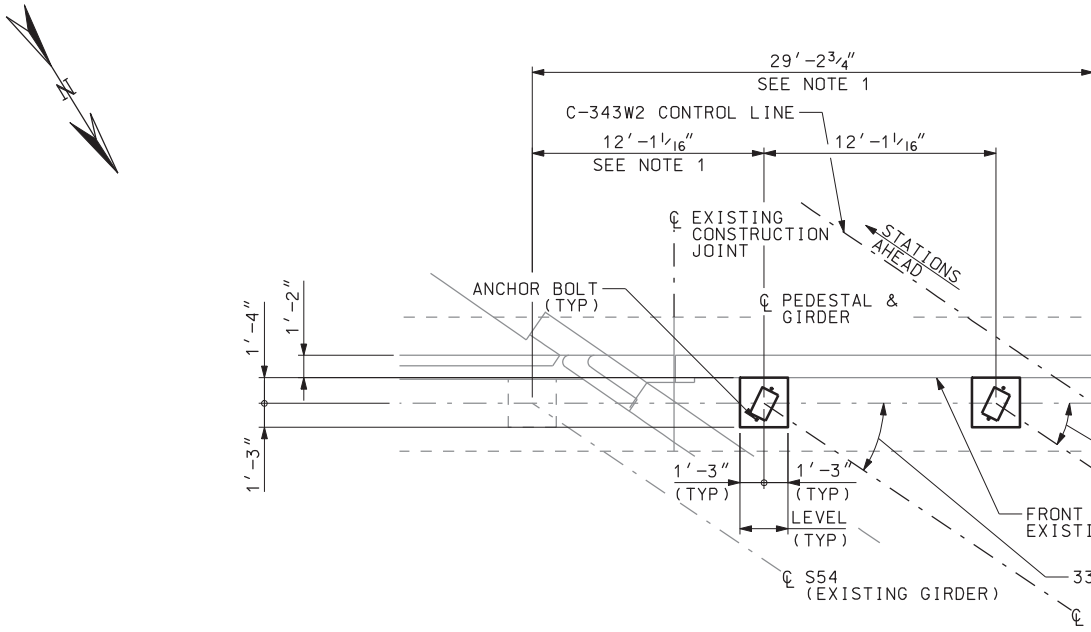


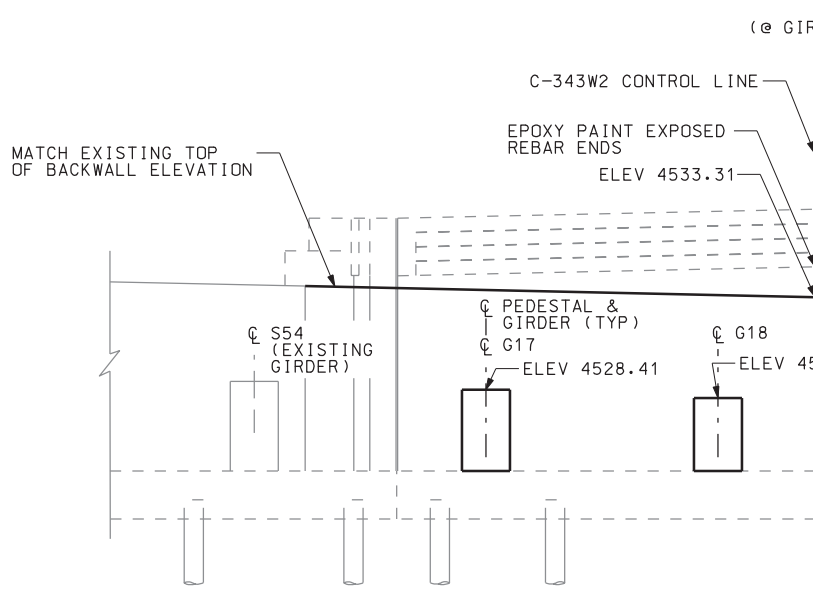


ELEVA

(LOOKING AH

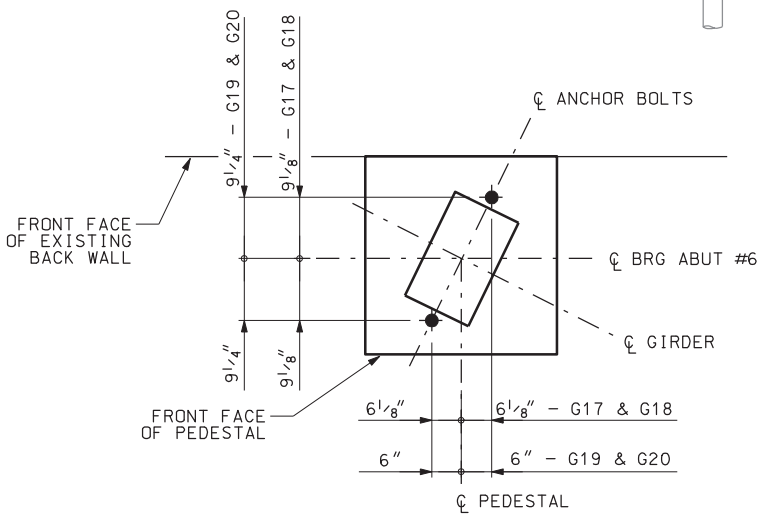


ANCHOR BOLT LOCATION PLAN

| S |
|---|
| PED |

DGN File: IP_PWPcdns1717\4433_C343-10_Abut6.dgn

02-MAY-2005

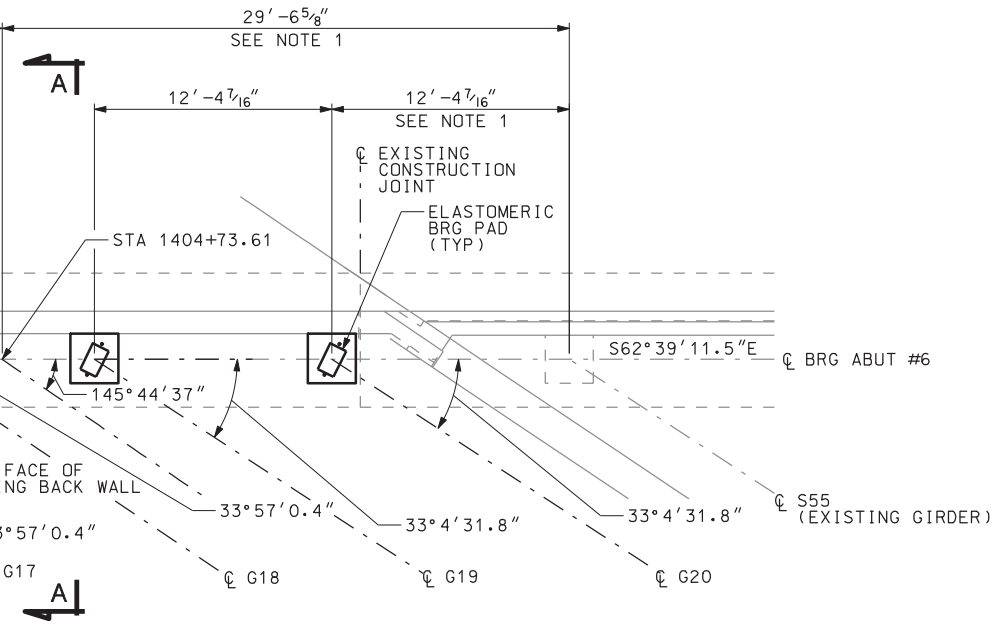


## PLAN

RDER SEAT LEVEL)

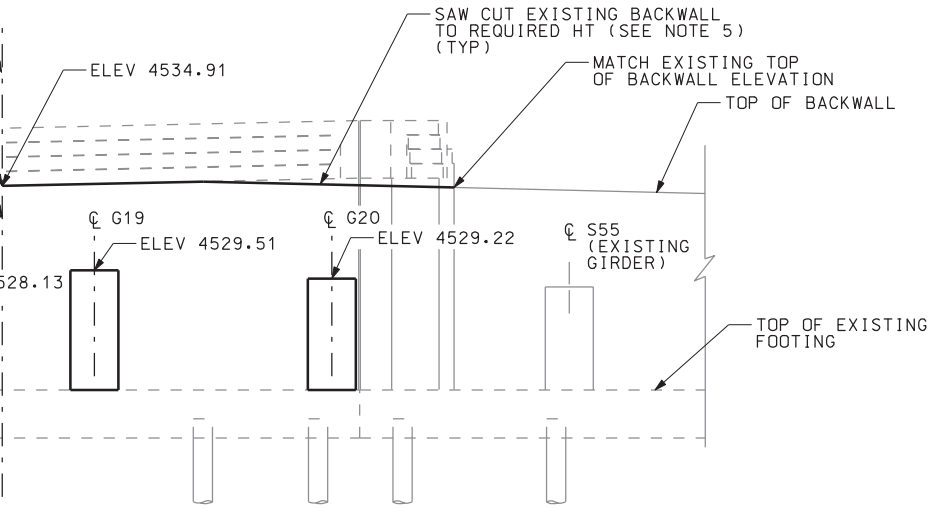


## ATION

EAD STATION)

| QUANTITIES | |
|---|---|
| TRUCTURAL CONCRETE | |
| DESTALS | 4.5 CY |

## NOTES

1. LOCATE ℄ G17 OFF OF ℄ EXISTING GIRDER S54.
   LOCATE ℄ G20 OFF OF ℄ EXISTING GIRDER S55.
2. SEE ABUTMENT DETAILS SHEET FOR SECTION A-A AND REINFORCEMENT DETAILS.
3. SEE BEARING DETAILS SHEET FOR ELASTOMERIC BEARING PAD DETAILS.
4. FINISH GIRDER BEARING SEAT AREA HIGH (2" LARGER THAN BEARING PAD EACH SIDE) AND RUB OR GRIND LEVEL TO ELEVATIONS SHOWN ± 1/16" (NO GROUTING).
5. IF TOP OF BACKWALL ELEVATION IS BELOW RETAINING WALL FACIA, SAWCUT WALL AT REQUIRED ELEVATION. IF TOP OF BACKWALL ELEVATION IS WITHIN RETAINING WALL FACIA, REMOVE FACIA AT JOINT AND INCREASE DECK AND APPROACH SLAB THICKNESS OVER WALL. SEE APPROACH SLAB DETAILS SHEET

| NO. | DATE | BY | REMARKS |
|---|---|---|---|
| | | | |

REVISIONS

UTAH DEPARTMENT OF TRANSPORTATION
SALT LAKE CITY, UTAH
STRUCTURES DIVISION

Baker

DESIGN
DRAWN GCK 12/04
QUANT. JPD 01/05
CHECK JPD 12/04
CHECK AW 12/04
CHECK MSA 01/05

APPROVAL RECOMM. DATE DESIGN ENGR.
APPROVED FOR USE BY UDOT DATE UDOT BRIDGE ENGR.

I-15: UTAH COUNTY
U.P.R.R. & US-89 OVERPASS
ABUTMENT #6
PROJECT NUMBER SP-15-6(52)241

UTAH
COUNTY

C-343W2
DRG. NO.

SHT. 10 OF 35

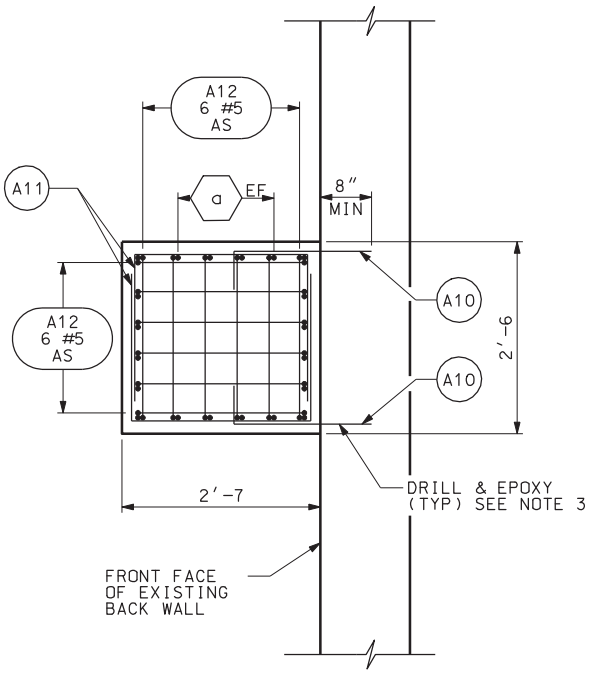


## SECTION C-C

(TYP ALL PEDESTALS)

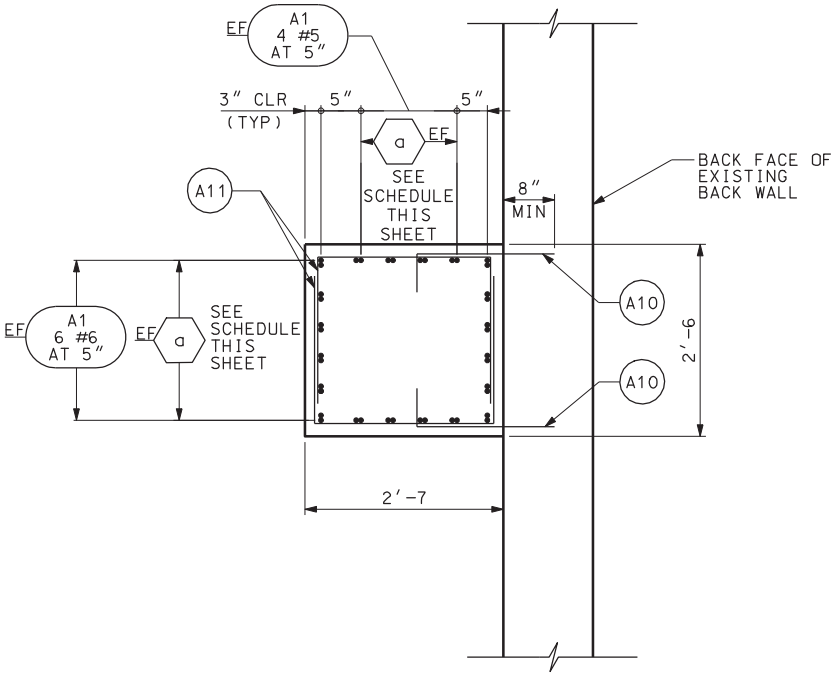


## SECTION B-B

| PEDESTAL | REINFORCEMENT | | |
|---|---|---|---|
| ABUT #1 | a | b | c |
| G1 | A2-20#6 AS | 8 Pair A10-16#4@12"max | 6 Pair A11- #4@12"max |
| G2 | A3-20#6 AS | 7 Pair A10-14#4@12"max | 5 Pair A11- #4@12"max |
| G3 | A4-20#6 AS | 9 Pair A10-18#4@12"max | 7 Pair A11- #4@12"max |
| G4 | A5-20#6 AS | 8 Pair A10-16#4@12"max | 7 Pair A11- #4@12"max |
| ABUT #6 | a | b | c |
| G17 | A6-20#6 AS | 6 Pair A10-12#4@12"max | 4 Pair A11- #4@12"max |
| G18 | A7-20#6 AS | 5 Pair A10-10#4@12"max | 3 Pair A11- #4@12"max |
| G19 | A8-20#6 AS | 8 Pair A10-16#4@12"max | 6 Pair A11- #4@12"max |
| G20 | A9-20#6 AS | 7 Pair A10-14#4@12"max | 5 Pair A11- #4@12"max |

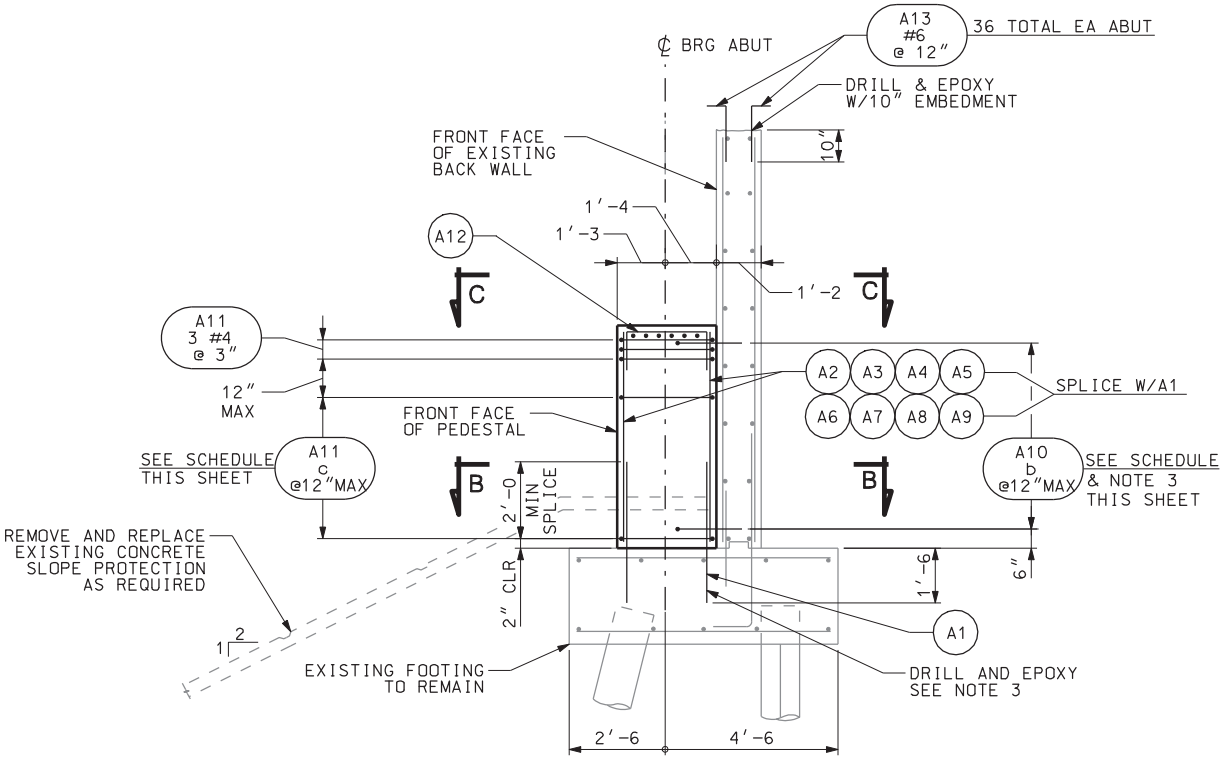


SECTION A-A

## NOTES

1. EXISTING ABUTMENT BACK WALL REINFORCING STEEL TO BE LEFT IN PLACE. SAND BLAST CLEAN AND REMOVE ALL CORROSION PRIOR TO CONCRETE PLACEMENT.
2. SEE ABUTMENT #1 AND ABUTMENT #6 SHEETS FOR LOCATIONS OF SECTION A-A AND ANCHOR BOLTS.
3. ADJUST DOWEL BARS HORIZONTALLY OR VERTICALLY ± 1" TO AVOID EXISTING REINFORCEMENT.
4. SEE CONCRETE SLOPE PROTECTION SHEET.

| NO. | DATE | BY | REMARKS |
|---|---|---|---|
| | | | |

REVISIONS

Baker

UTAH DEPARTMENT OF TRANSPORTATION
SALT LAKE CITY, UTAH
STRUCTURES DIVISION

DESIGN MSA 12/04 CHECK AW 12/04
DRAWN GCK 12/04 CHECK MSA 12/04
QUANT. CHECK

APPROVAL RECOMM. DATE DESIGN ENGR.
APPROVED FOR USE BY UDOT DATE UDOT BRIDGE ENGR.

I-15: UTAH COUNTY
U.P.R.R. & US-89 OVERPASS
ABUTMENT DETAILS

PROJECT NUMBER SP-15-6(52)241

UTAH
COUNTY

C-343W2
DRG. NO.

SHT. 11 OF 35

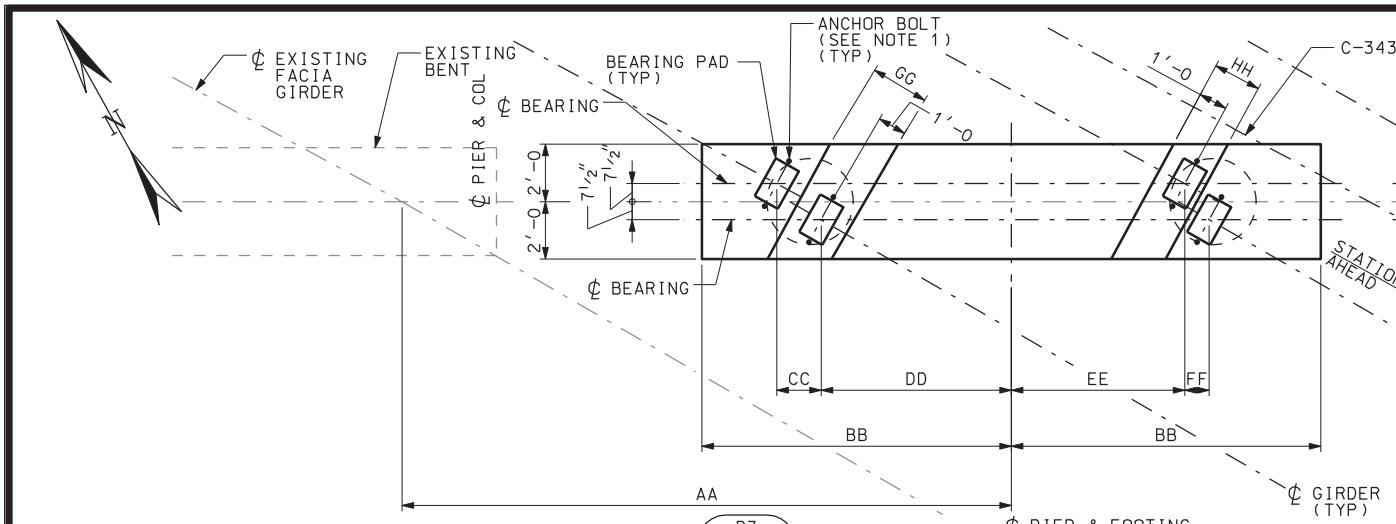


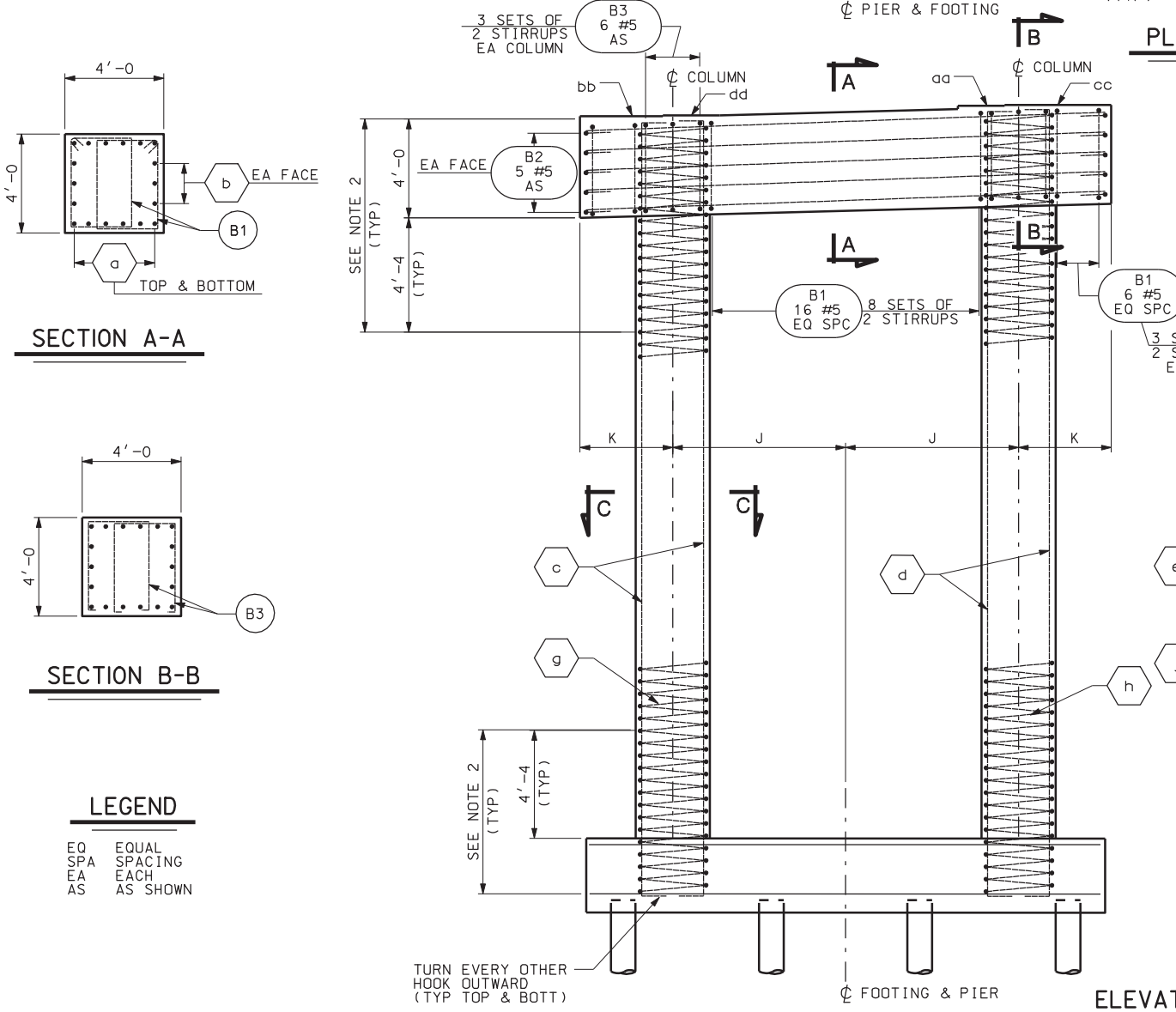


ELEVAT




SECTION A-A




SECTION B-B

## LEGEND

| | |
|---|---|
| EQ | EQUAL |
| SPA | SPACING |
| EA | EACH |
| AS | AS SHOWN |

| PIER | DIMENS | | | | | | | | | |
|---|---|---|---|---|---|---|---|---|---|---|
| | A | B | C | D | E | F | G | H | AA | |
| #2 | 21'-3 7/16 | 11'-6 | 3'-7 3/4 | 5'-0 3/8 | 5'-8 9/16 | 2'-11 9/16 | 2'-11 | 2'-7 | 22'-5 5/16 | |
| #3 | 20'-5 | 10'-9 | 3'-4 7/16 | 4'-8 13/16 | 5'-7 1/4 | 2'-9 1/8 | 2'-9 | 2'-6 | 21'-2 1/16 | |
| #4 | 19'-8 1/4 | 10'-0 | 3'-1 3/16 | 4'-5 5/16 | 5'-6 11/16 | 2'-6 11/16 | 2'-7 1/2 | 2'-5 | 19'-11 3/4 | |
| #5 | 18'-8 7/8 | 9'-7 1/2 | 2'-10 3/1 | 4'-6 1/8 | 5'-2 3/8 | 2'-4 9/16 | 2'-6 1/4 | 2'-4 | 19'-3 1/8 | |

| PIER | ELEVATIONS | | | | | | | | PIER |
|---|---|---|---|---|---|---|---|---|---|
| | a | b | c | d | aa | bb | cc | dd | |
| #2 | 4528.88 | 4528.45 | 4528.80 | 4528.39 | 4529.72 | 4529.27 | 4529.49 | 4529.07 | #2 |
| #3 | 4529.07 | 4528.69 | 4529.21 | 4528.85 | 4529.91 | 4529.51 | 4530.08 | 4529.70 | #3 |
| #4 | 4529.20 | 4528.86 | 4529.21 | 4528.64 | 4530.19 | 4529.83 | 4530.16 | 4529.82 | #4 |
| #5 | 4528.95 | 4528.64 | 4528.95 | 4528.65 | 4529.99 | 4529.67 | 4529.96 | 4529.65 | #5 |

DGN File:IP_PWPcdns1717\4433_C343-12_PierDtlof2.dgn
02-MAY-2005

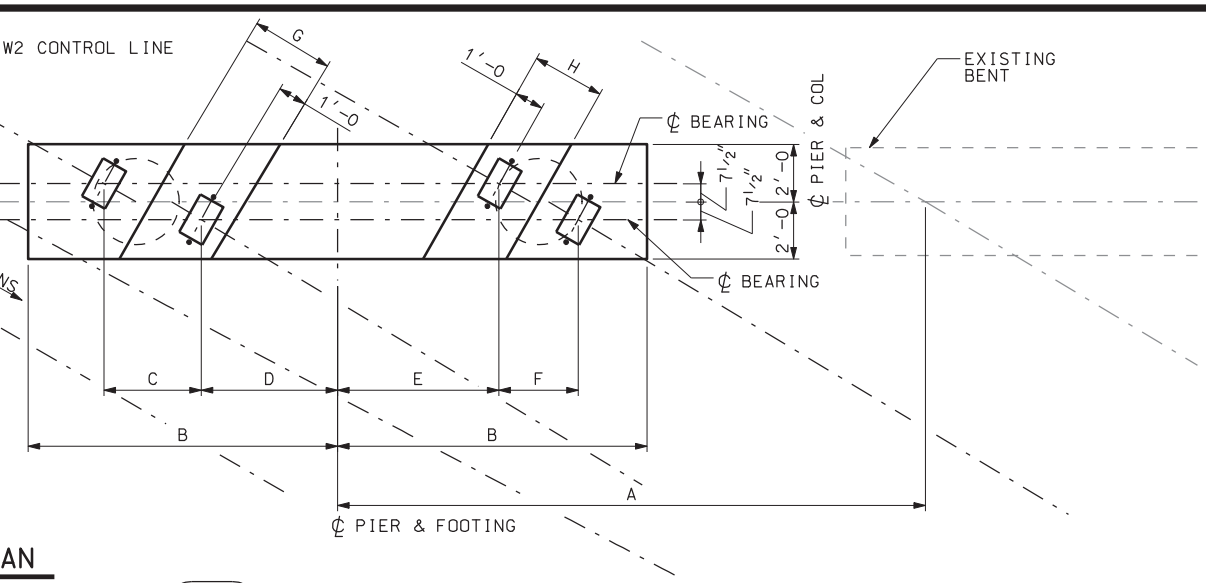


AN

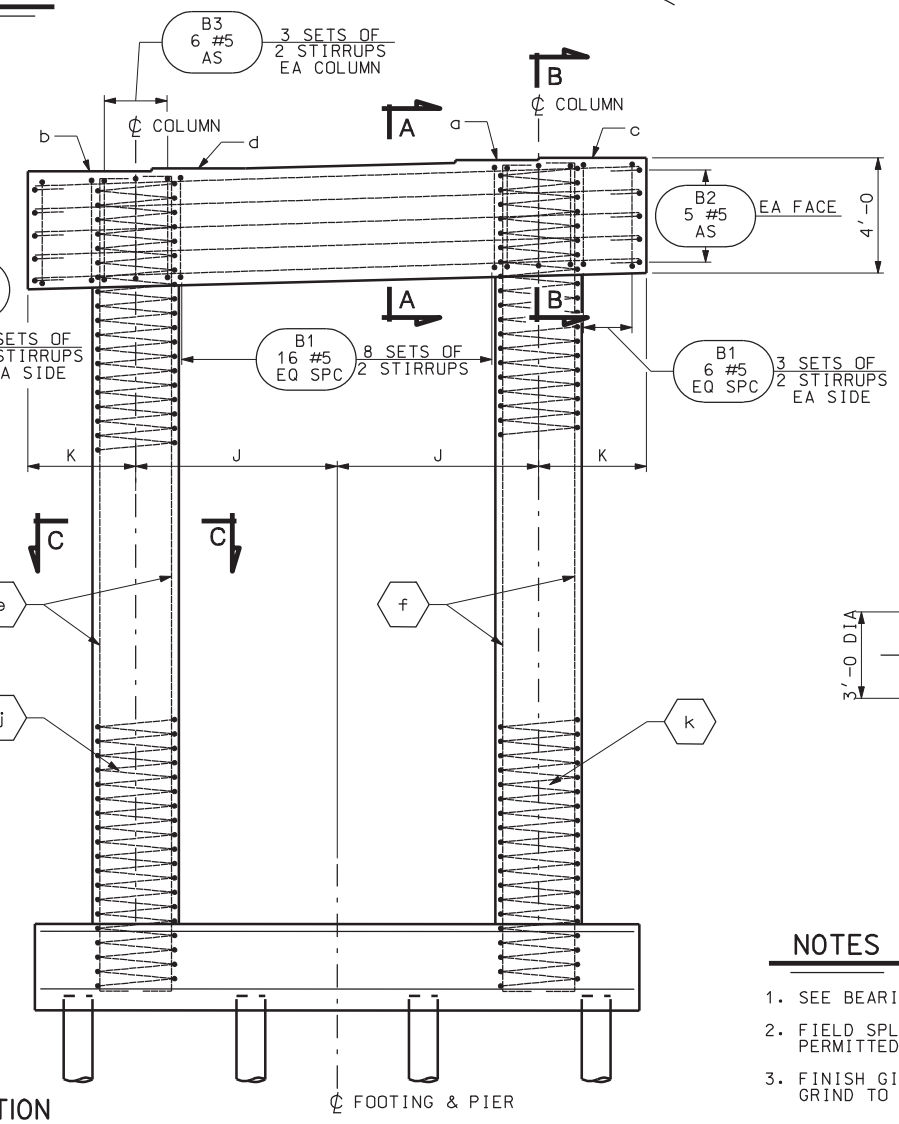


TION

| QUANTITIES STRUCTURAL CONCRETE | |
|---|---|
| COLUMNS | 100.0 CY |
| PIER CAPS | 100.0 CY |

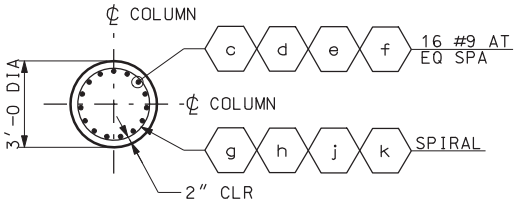


SECTION C-C

## NOTES

1. SEE BEARING DETAILS SHEET FOR ANCHOR BOLT LOCATIONS.
2. FIELD SPLICING OF SPIRAL REINFORCEMENT IS NOT PERMITTED IN PLASTIC HINGE ZONE.
3. FINISH GIRDER BEARING SEAT AREA HIGH AND RUB OR GRIND TO ELEVATIONS SHOWN ±1/16".

SIONS

| BB | CC | DD | EE | FF | GG | HH | J | K |
|---|---|---|---|---|---|---|---|---|
| 11'-6 | 1'-7 3/8 | 7'-1 7/16 | 6'-2 1/2 | 10 1/8" | 2'-0 | 1'-7 1/2 | 7'-6 | 4'-0 |
| 10'-9 | 1'-6 1/2 | 6'-7 3/8 | 6'-0 3/16 | 10 3/16" | 1'-11 1/2 | 1'-8 | 7'-0 | 3'-9 |
| 10'-0 | 1'-6 | 6'-0 15/1 | 5'-10 3/4 | 10 7/8" | 1'-11 1/2 | 1'-8 1/2 | 6'-6 | 3'-6 |
| 9'-7 1/2 | 1'-5 1/2 | 5'-11 3/16 | 5'-5 15/16 | 11 5/16" | 1'-11 1/2 | 1'-8 3/4 | 6'-4 1/2 | 3'-3 |

| REINFORCEMENT | | | | | | | | | |
|---|---|---|---|---|---|---|---|---|---|
| a | b | c | d | e | f | g | h | j | k |
| B4-6#10 AS | B5-3#8 AS | C1-16#9 | C2-16#9 | C3-16#9 | C4-16#9 | C5-1#4 AS | C6-1#4 AS | C7-1#4 AS | C8-1#4 AS |
| B6-6#10 AS | B7-3#8 AS | C11-16#9 | C12-16#9 | C13-16#9 | C14-16#9 | C15-1#4 AS | C16-1#4 AS | C17-1#4 AS | C18-1#4 AS |
| B8-6#10 AS | B9-3#8 AS | C21-16#9 | C22-16#9 | C23-16#9 | C24-16#9 | C25-1#4 AS | C26-1#4 AS | C27-1#4 AS | C28-1#4 AS |
| B10-6#10 AS | B11-3#8 AS | C31-16#9 | C32-16#9 | C33-16#9 | C34-16#9 | C35-1#4 AS | C36-1#4 AS | C37-1#4 AS | C38-1#4 AS |

| NO. | DATE | BY | REMARKS |
|---|---|---|---|
| | | | |

REVISIONS

Baker

UTAH DEPARTMENT OF TRANSPORTATION
SALT LAKE CITY, UTAH
STRUCTURES DIVISION

DESIGN MSA 12/04 CHECK JPD 12/04
DRAWN GCK 12/04 CHECK AW 12/04
QUANT. MSA 01/05 CHECK JPD 01/05

APPROVAL RECOMM. DATE DESIGN ENGR.
APPROVED FOR USE BY UDOT DATE UDOT BRIDGE ENGR.

I-15: UTAH COUNTY
U.P.R.R. & US-89 OVERPASS
PIER DETAILS 1 OF 2
PROJECT NUMBER SP-15-6(52)241

UTAH
COUNTY
C-343W2
DRG. NO.

SHT. 12 OF 35

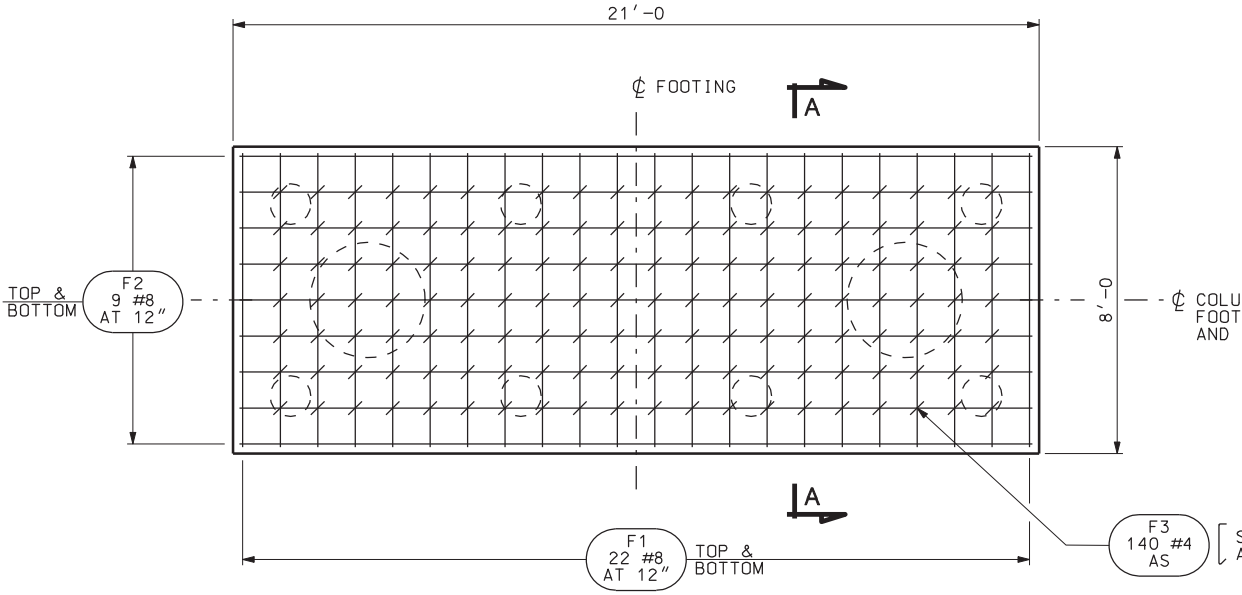


## FOOTING PLAN

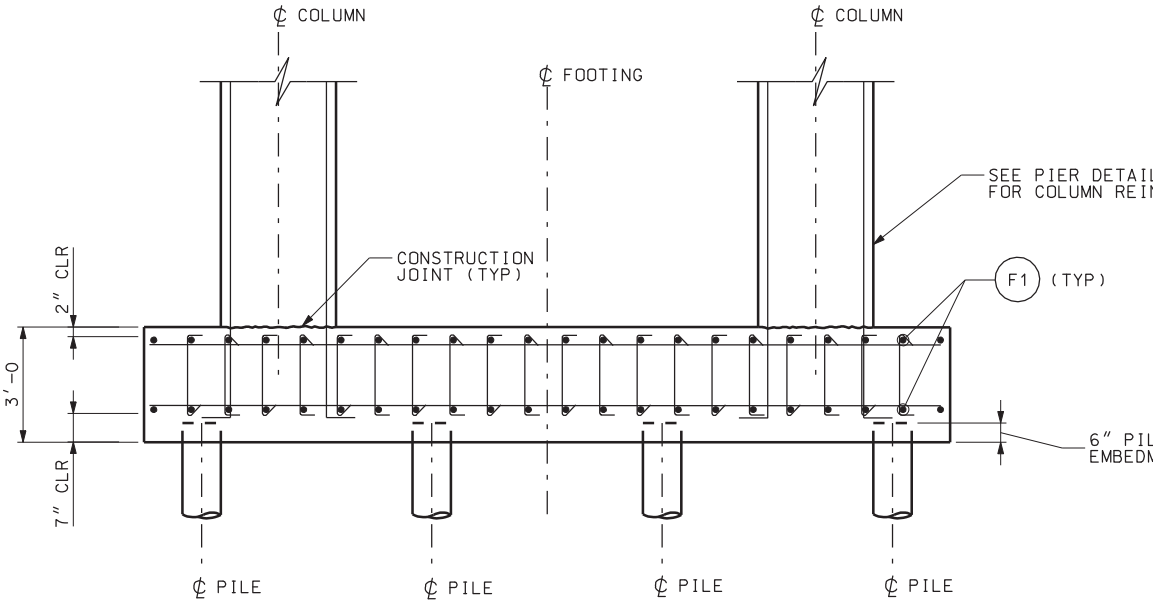


## FOOTING ELEVATION

## LEGEND

| | |
|---|---|
| EQ | EQUAL |
| SPA | SPACING |
| EA | EACH |
| AS | AS SHOWN |

DGN File: IP_PWPcdns1717\4433_C343-13_PierDtl2of2.dgn

02-MAY-2005

MNS,
ING
PIER

STIRRUP
ALTERNATE HOOKS

LS 1 OF 2 SHEET
NFORCEMENT

LE
MENT

## NOTES

1. SEE PIER DETAILS 1 OF 2 SHEET FOR COLUMN REINFORCEMENT AND COLUMN SPACING.

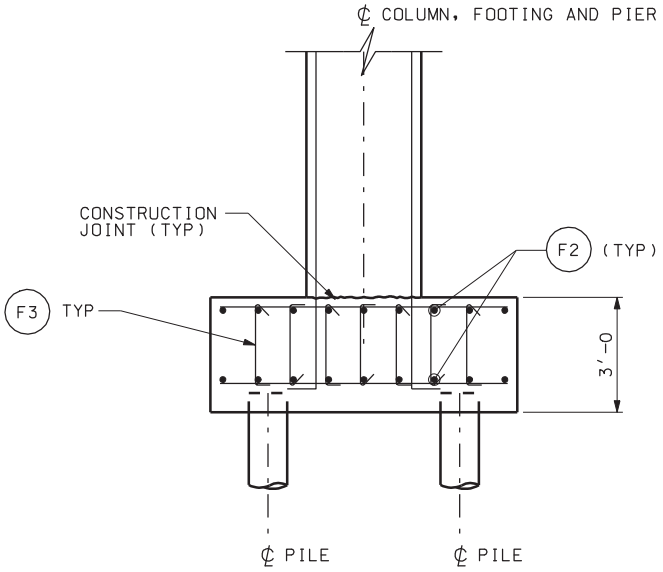


## SECTION A-A

| QUANTITIES STRUCTURAL CONCRETE | |
|---|---|
| FOOTINGS | 149.4 CY |

| NO. | DATE | BY | REMARKS |
|---|---|---|---|
| | | | |

REVISIONS

UTAH DEPARTMENT OF TRANSPORTATION
SALT LAKE CITY, UTAH
STRUCTURES DIVISION

Baker

DESIGN MSA 12/04 CHECK JPD 12/04
DRAWN GCK 12/04 CHECK AW 12/04
QUANT. MSA 01/05 CHECK JPD 01/05

APPROVAL RECOMM. DATE DESIGN ENGR.
APPROVED FOR USE BY UDOT DATE UDOT BRIDGE ENGR.

I-15: UTAH COUNTY
U.P.R.R. & US-89 OVERPASS
PIER DETAILS 2 OF 2

PROJECT NUMBER SP-15-6(52)241

UTAH
COUNTY

C-343W2
DRG. NO.

SHT. 13 OF 35

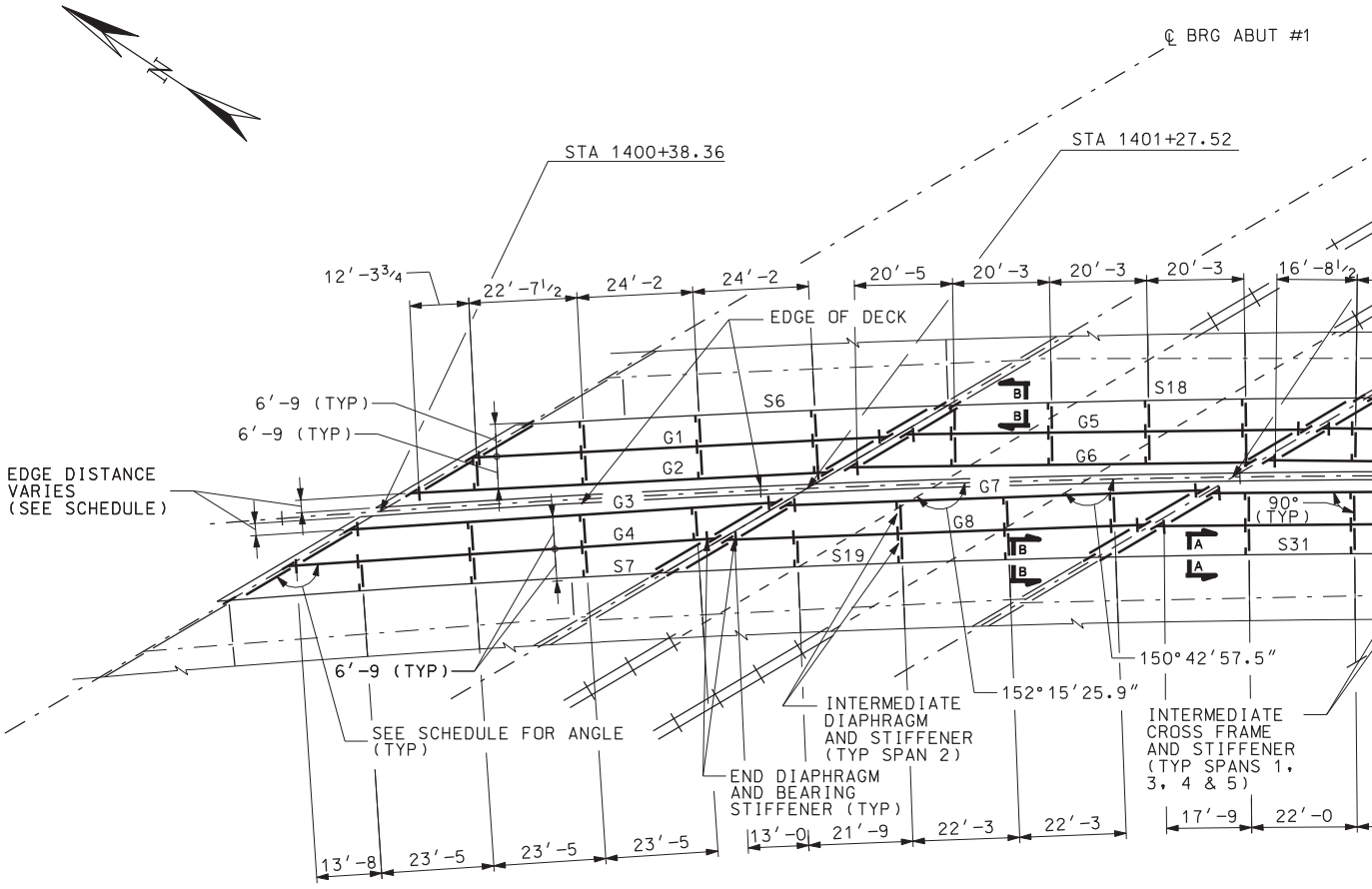


FRAMIN

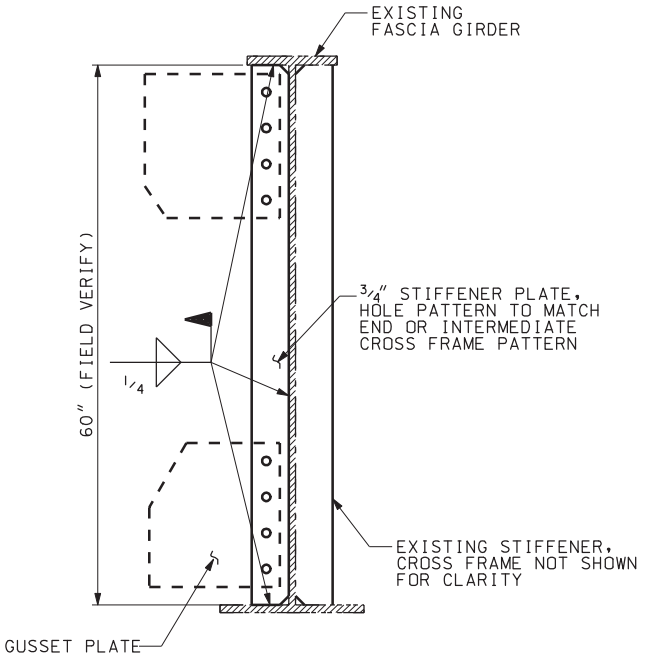


## SECTION A-A

(SPANS 1, 3, 4, & 5)

## GIRDER SCHEDULE

| GIRDER NO. | GIRDER ANGLE (OBTUSE) | EDGE DISTANCE | |
|---|---|---|---|
| | | MAXIMUM | MINIMUM |
| G1 | 152° 01' 45.1" | - | - |
| G2 | 152° 01' 45.1" | 3' - 3 3/4" | 2' - 8" |
| G3 | 153° 08' 49.9" | 3' - 3 1/4" | 2' - 6 7/8" |
| G4 | 153° 08' 49.9" | - | - |
| G5 | 150° 30' 13.1" | - | - |
| G6 | 150° 30' 13.1" | 3' - 3 3/8" | 2' - 8" |
| G7 | 151° 33' 12.6" | 3' - 3 1/4" | 2' - 7 3/8" |
| G8 | 151° 33' 12.6" | - | - |
| G9 | 148° 58' 13.7" | - | - |
| G10 | 148° 58' 13.7" | 3' - 3" | 2' - 7 3/4" |
| G11 | 149° 56' 48.7" | 3' - 3 3/8" | 2' - 7 3/4" |
| G12 | 149° 56' 48.7" | - | - |
| G13 | 147° 28' 46.3" | - | - |
| G14 | 147° 28' 46.3" | 3' - 2 5/8" | 2' - 8 1/2" |
| G15 | 148° 24' 18.2" | 3' - 2 5/8" | 2' - 8 1/4" |
| G16 | 148° 24' 18.2" | - | - |
| G17 | 146° 02' 58.7" | - | - |
| G18 | 146° 02' 58.7" | 3' - 2 3/8" | 2' - 8 3/8" |
| G19 | 146° 55' 26.4" | 3' - 2 7/8" | 2' - 8 1/2" |
| G20 | 146° 55' 26.4" | - | - |

DGN File:IP_PWPcdns1717\4433_C343-14_FrmPln.dgn
02-MAY-2005

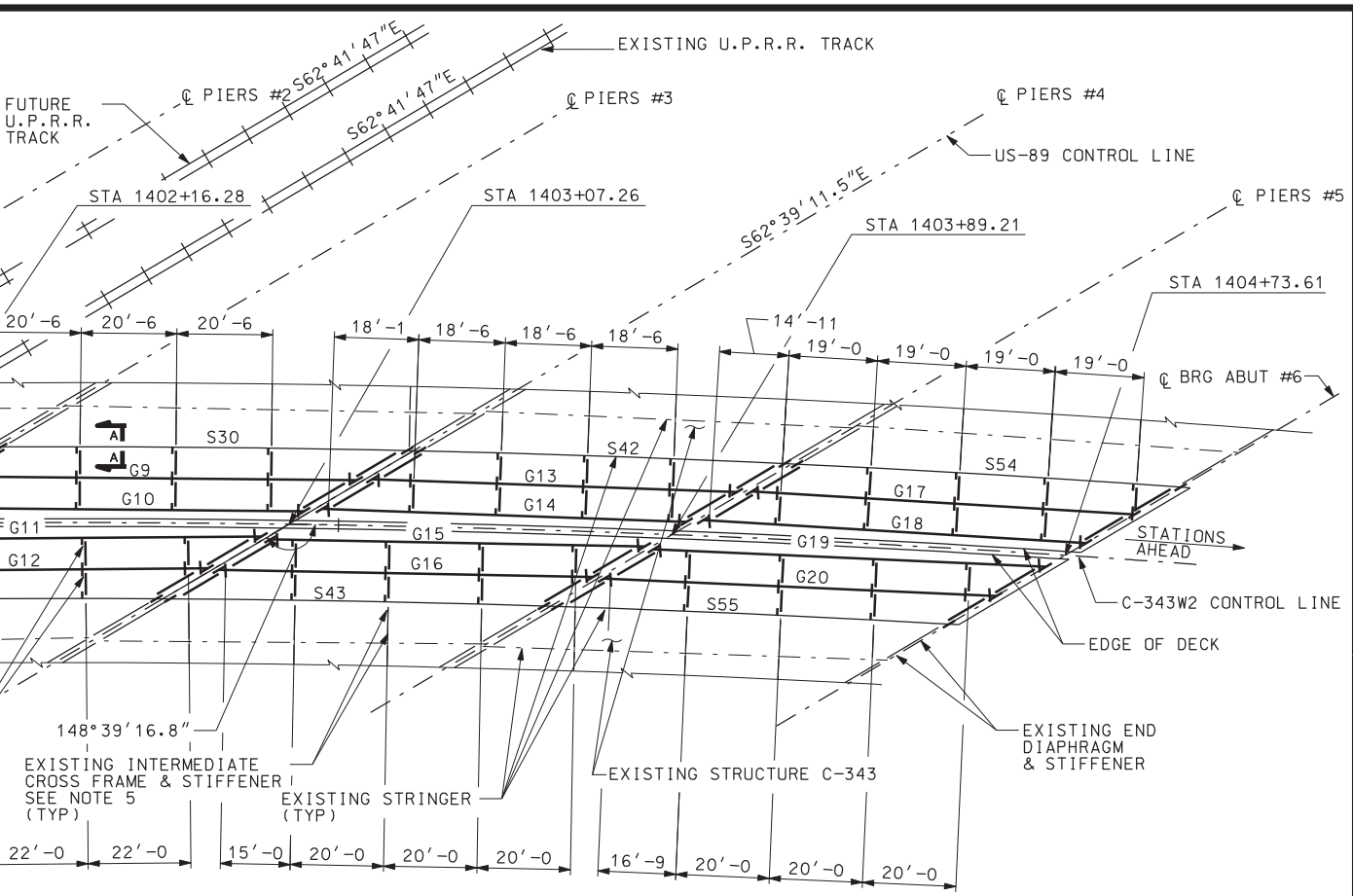


NG PLAN

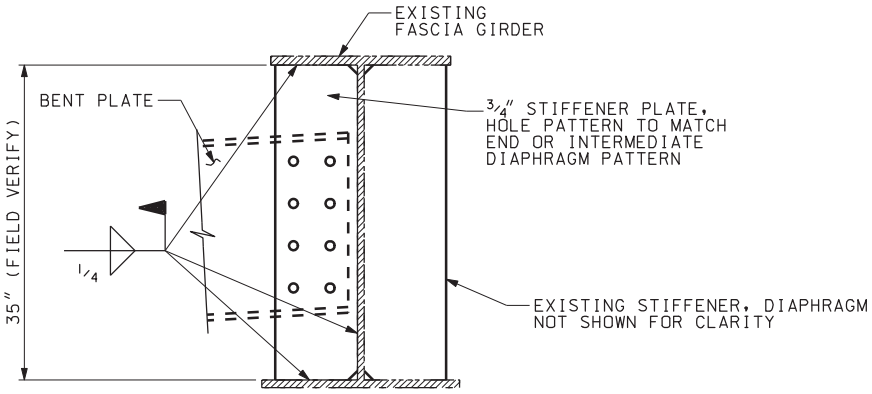


## SECTION B-B

(SPAN 2)

## NOTES

1. CENTER LINES OF ABUTMENTS AND PIERS ARE PARALLEL TO US-89 CONTROL LINE BEARING S62°39'11.5"E.
2. NEW GIRDERS ARE DESIGNATED AS G1, G2, G3, ETC. EACH NEW GIRDER IS PARALLEL TO EXISTING FACIA GIRDER IN EACH SPAN.
3. END DIAPHRAGMS ARE PARALLEL TO ABUTMENT AND PIER CENTER LINES BEARING S62°39'11.5"E.
4. CONTRACTOR TO VERIFY EXISTING CROSS FRAME AND DIAPHRAGM LOCATIONS PRIOR TO NEW GIRDER, NEW CROSS FRAME, AND NEW DIAPHRAGM FABRICATION. NEW CROSS FRAME AND DIAPHRAGM LOCATIONS SHALL BE ADJUSTED TO MATCH EXISTING CROSS FRAME AND DIAPHRAGM LOCATIONS.

| NO. | DATE | BY | REMARKS |
|---|---|---|---|

REVISIONS

Baker

UTAH DEPARTMENT OF TRANSPORTATION
SALT LAKE CITY, UTAH
STRUCTURES DIVISION

DESIGN AW 12/04 CHECK JPD 12/04 CHECK AW 12/04 CHECK
DRAWN GCK 12/04 QUANT.

APPROVAL RECOMM. DATE DESIGN ENGR.
APPROVED FOR USE BY UDOT DATE UDOT BRIDGE ENGR.

I-15: UTAH COUNTY
U.P.R.R. & US-89 OVERPASS
FRAMING PLAN

PROJECT NUMBER SP-15-6(52)241

UTAH
COUNTY

C-343W2
DRG. NO.

SHT. 14 OF 35

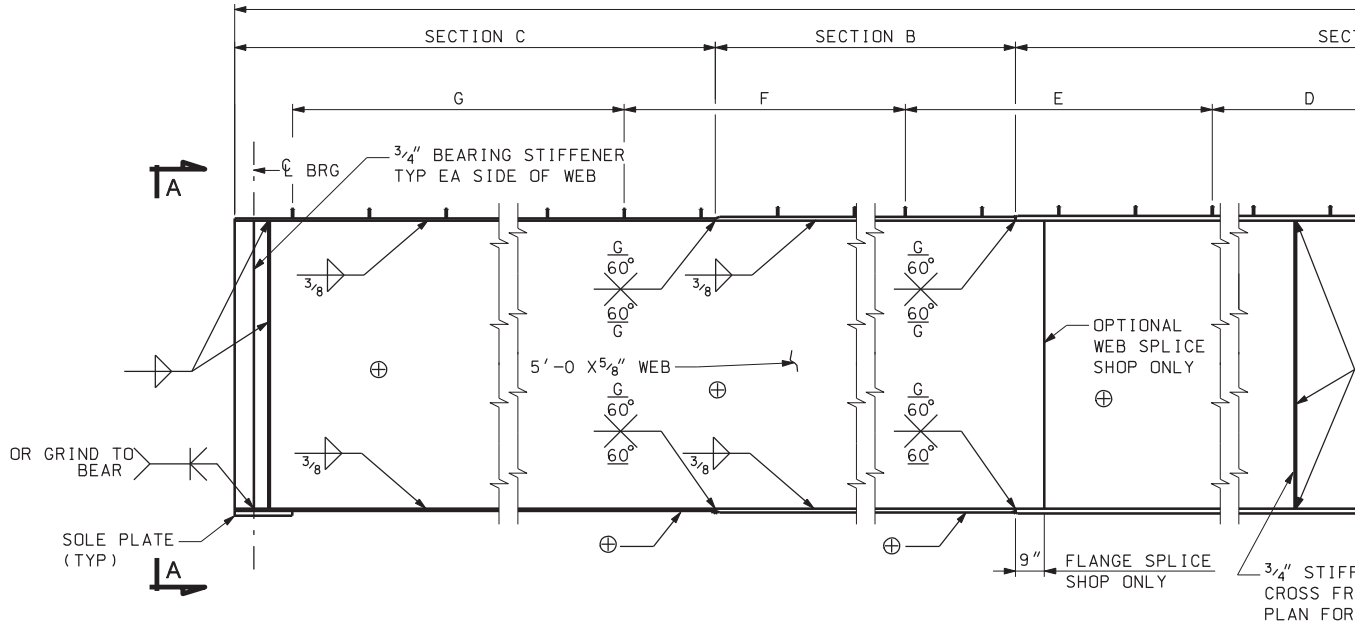


## GIRDER

GIRDERS G
AND G9 T

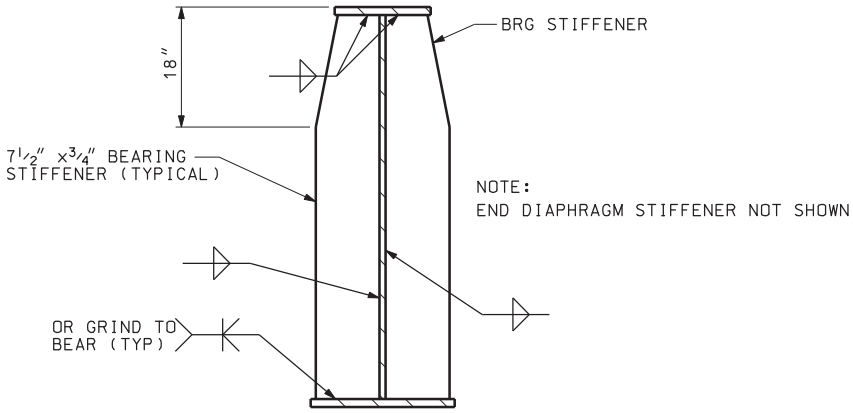


## SECTION A-A

ST
1" FROM
(TYP)

4 1/2" X 3/4" INT
CROSS FRAME

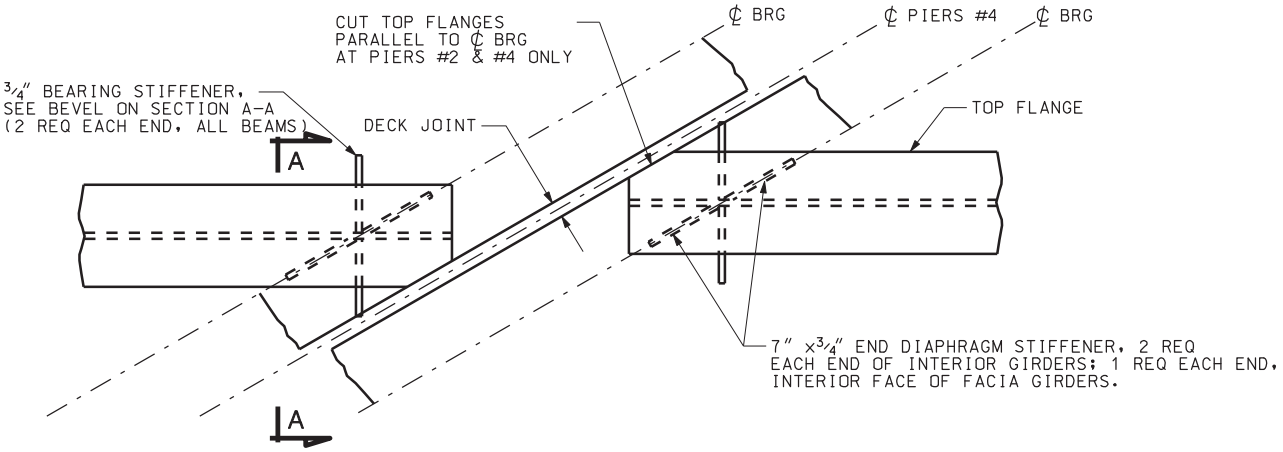


## DETAIL GIRDERS AT ℄ BEARING

PIERS #4 SHOWN
OTHER PIERS SIMILAR

DGN File:IP_PWPcdms1717\4433_C343-15_GirderDtl_1.dgn
02-MAY-2005

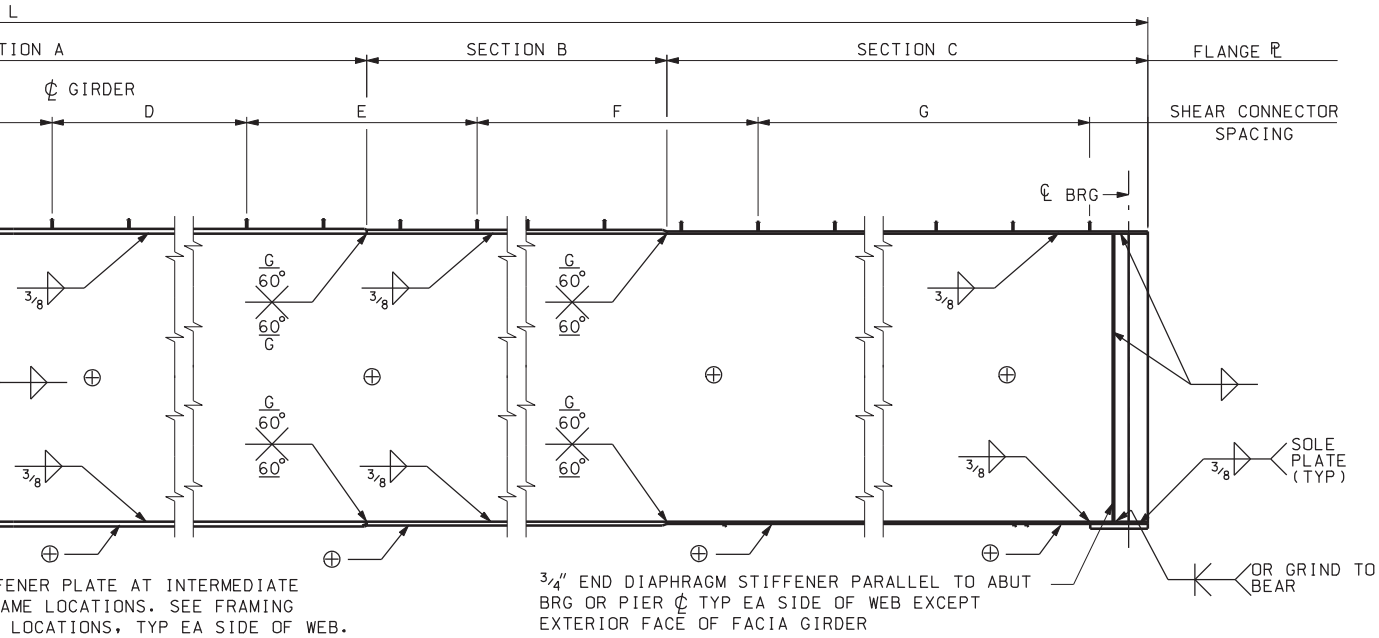


## ELEVATION

1 THROUGH G4
THROUGH G20

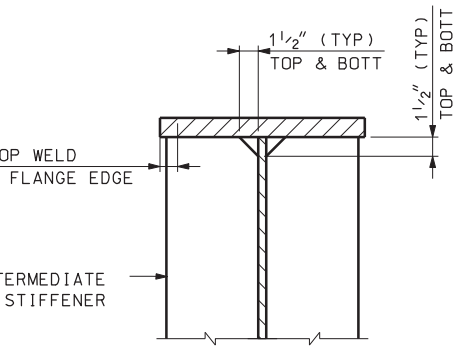


## INTERMEDIATE CROSS FRAME STIFFENER DETAIL

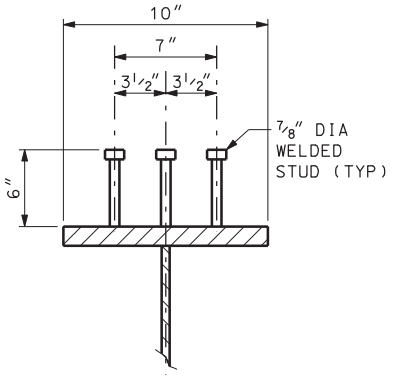


## SHEAR CONNECTOR DETAIL

GIRDERS G1 THROUGH G4
AND G9 THROUGH G20

## NOTES

1. SEE GIRDER DETAILS 2 OF 3 SHEET FOR GIRDER G5 THROUGH G8 INFORMATION.
2. PERFORM CHARPY V-NOTCH TOUGHNESS TESTS ON ALL MAIN LOAD CARRYING MEMBERS SUBJECT TO TENSION STRESS, INDICATED BY . TEST RESULTS MUST MEET REQUIREMENTS FOR ZONE 2.
3. ALL DIMENSIONS SHOWN ARE HORIZONTAL. TAKE VERTICAL GRADE INTO ACCOUNT WHEN DETERMINING FINAL LENGTH FOR FABRICATION. SEE GIRDER DETAILS 3 OF 3 SHEET FOR DIMENSIONS AND CAMBER SCHEDULES.
4. ALL INTERMEDIATE CROSS FRAME STIFFENERS AND BEARING STIFFENERS ARE NORMAL TO THE WEB. END DIAPHRAGM STIFFENERS ARE PARALLEL TO THE ABUTMENT OR PIER CENTERLINE OF BEARING.
5. CENTERLINES OF GIRDERS ARE PARALLEL TO THE CENTERLINES OF EXISTING FASCIA GIRDER.
6. SHEAR CONNECTORS, BOLTS, AND STIFFENERS ARE INCLUDED IN THE CONTRACT PRICE FOR STRUCTURAL STEEL.
7. SEE BEARING DETAILS SHEET FOR SOLE PLATE AND BEARING DETAILS.
8. USE GRADE 36 MINIMUM STRUCTURAL STEEL FOR GIRDER WEBS, FLANGES, AND STIFFENERS.
9. CONFORM TO THE REQUIREMENTS OF THE ANSI/AASHTO/AWS BRIDGE WELDING CODE D1.5. FOR WELDING, WELDER QUALIFICATIONS, PREQUALIFICATION OF WELD DETAILS AND INSPECTION OF WELDS
10. THE METHODS OF JOINT PREPARATION FOR WELDING SHOWN ON THE PLANS ARE BASED ON THE USE OF MANUAL SHIELDED METAL-ARC WELDING. THE USE OF THIS OR ANY OTHER WELDING PROCESS IS SATISFACTORY ONLY AFTER THE WELDING PROCEDURE HAS BEEN SUBMITTED BY THE CONTRACTOR AND APPROVED BY THE ENGINEER.
11. USE THE MINIMUM SIZED WELDS REQUIRED BY ANSI/AASHTO/AWS BRIDGE WELDING CODE D1.5 FOR THE THICKNESS OF THE MATERIAL JOINED FOR ALL STRENGTH FILLET WELDS UNLESS OTHERWISE SPECIFIED.
12. USE MINIMUM 1/4" WELD.
13. DIMENSIONS SHOWN ON THE PLANS ASSUME THE AMBIENT TEMPERATURE OF THE GIRDER TO BE 70°F±. CORRECT THE LENGTH USED IN FABRICATION AT THE RATE OF 1/16" PER EACH 100' OF LENGTH FOR EVERY 10°F DIFFERENCE IN TEMPERATURE TO ALLOW FOR EXPANSION AND CONTRACTION.
14. STRUCTURAL STEEL CONFORMING TO AASHTO M 270 GRADE 36 IS ACCEPTABLE FOR USE IN SECONDARY MEMBERS SUCH AS DIAPHRAGMS, STIFFENERS, MASONRY PLATES, ETC. EXCEPT WHEN UNPAINTED WEATHERING STEEL IS SPECIFIED.
15. FIELD WELDING TO GIRDERS IS NOT PERMITTED EXCEPT WHERE NOTED.

| NO. | DATE | BY | REMARKS |
|---|---|---|---|

REVISIONS

Baker

UTAH DEPARTMENT OF TRANSPORTATION
SALT LAKE CITY, UTAH
STRUCTURES DIVISION

DESIGN JPD 12/04 CHECK AW 12/04
DRAWN GCK 12/04 CHECK JPD 12/04
QUANT. CHECK

APPROVAL RECOMM. DATE DESIGN ENGR.
APPROVED FOR USE BY UDOT DATE UDOT BRIDGE ENGR.

I-15: UTAH COUNTY
U.P.R.R. & US-89 OVERPASS
GIRDER DETAILS 1 OF 3

PROJECT NUMBER SP-15-6(52)241

UTAH
COUNTY

C-343W2
DRG. NO.

SHT. 15 OF 35

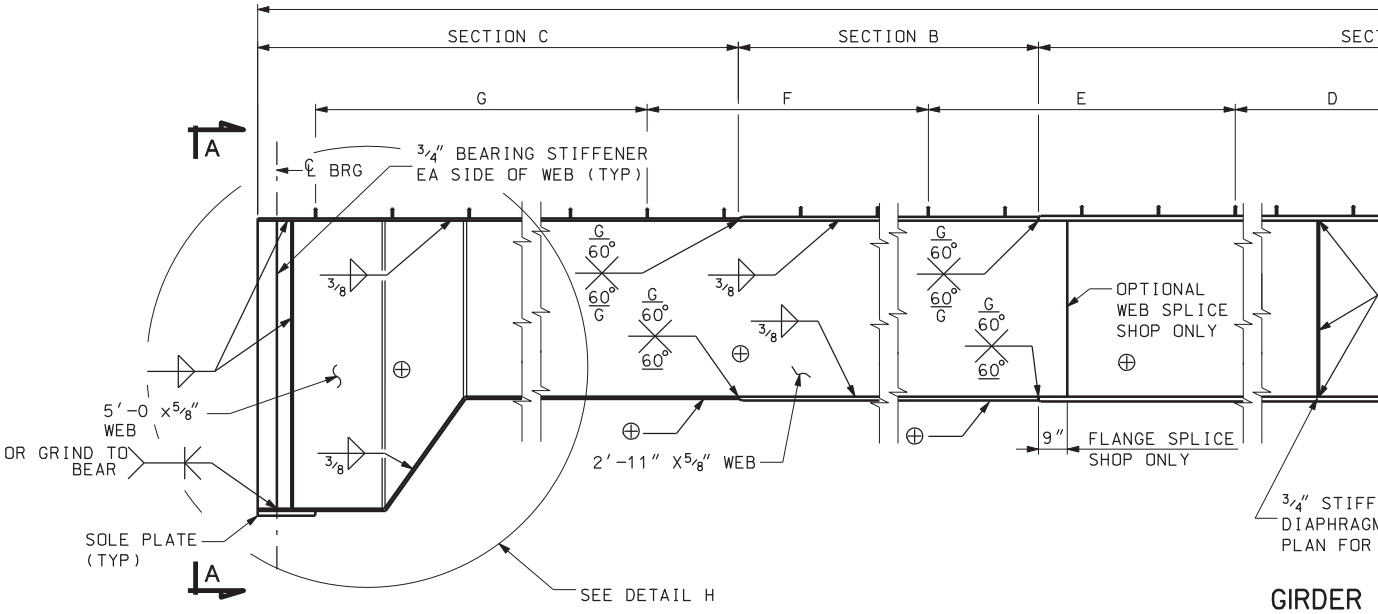


GIRDER

GIRDERS G

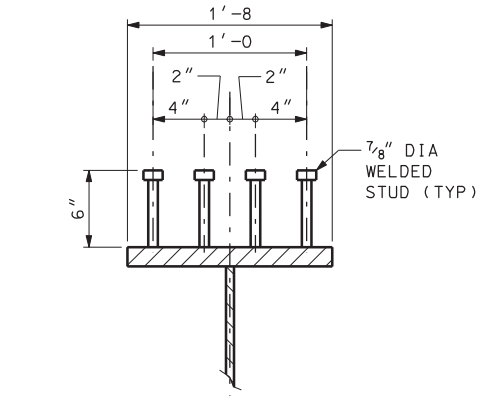


SHEAR CONNECTOR DETAIL

GIRDERS G5 THROUGH G8

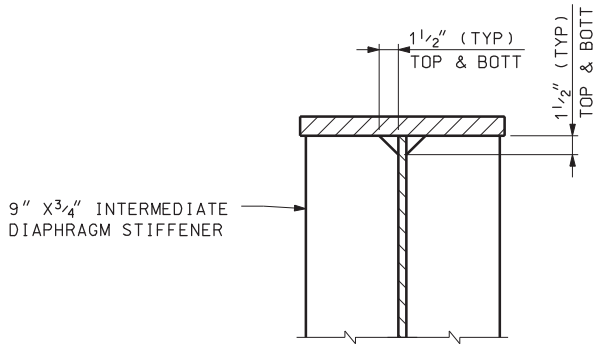


INTERMEDIATE DIAPHRAGM

STIFFENER DETAIL

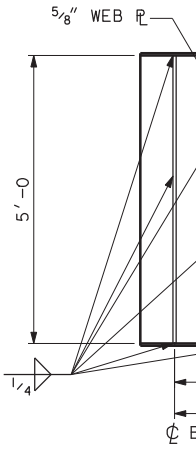


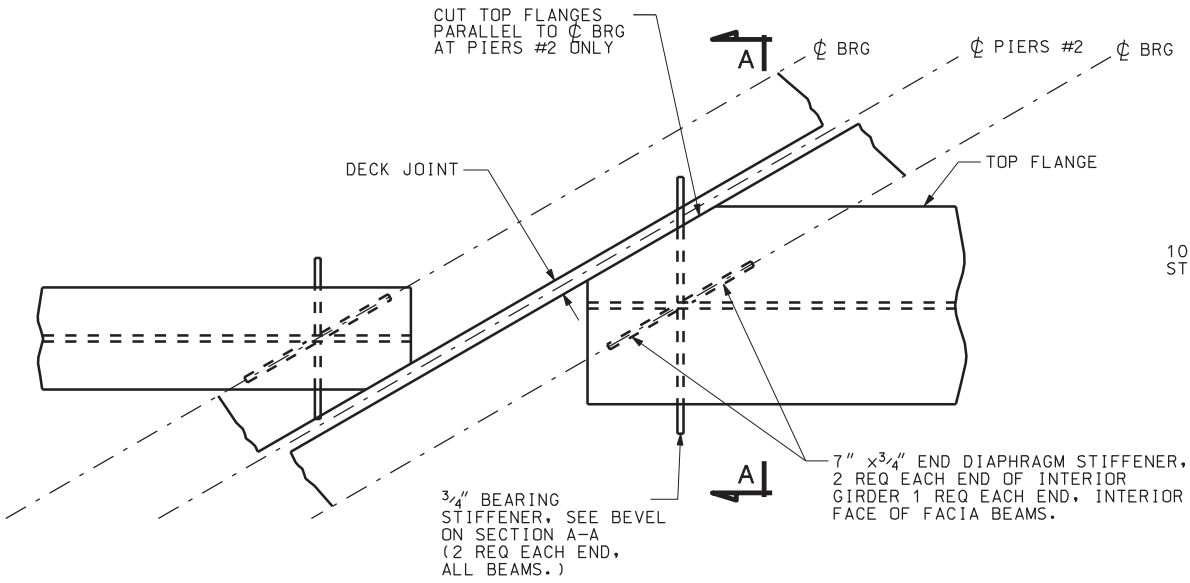


DETAIL GIRDERS AT ℄ BEARING

PIERS #2 SHOWN, PIERS #3 SIMILAR

DGN File:IP_PWPcdns1717\4433_C343-16_GirderDtl_2.dgn
02-MAY-2005

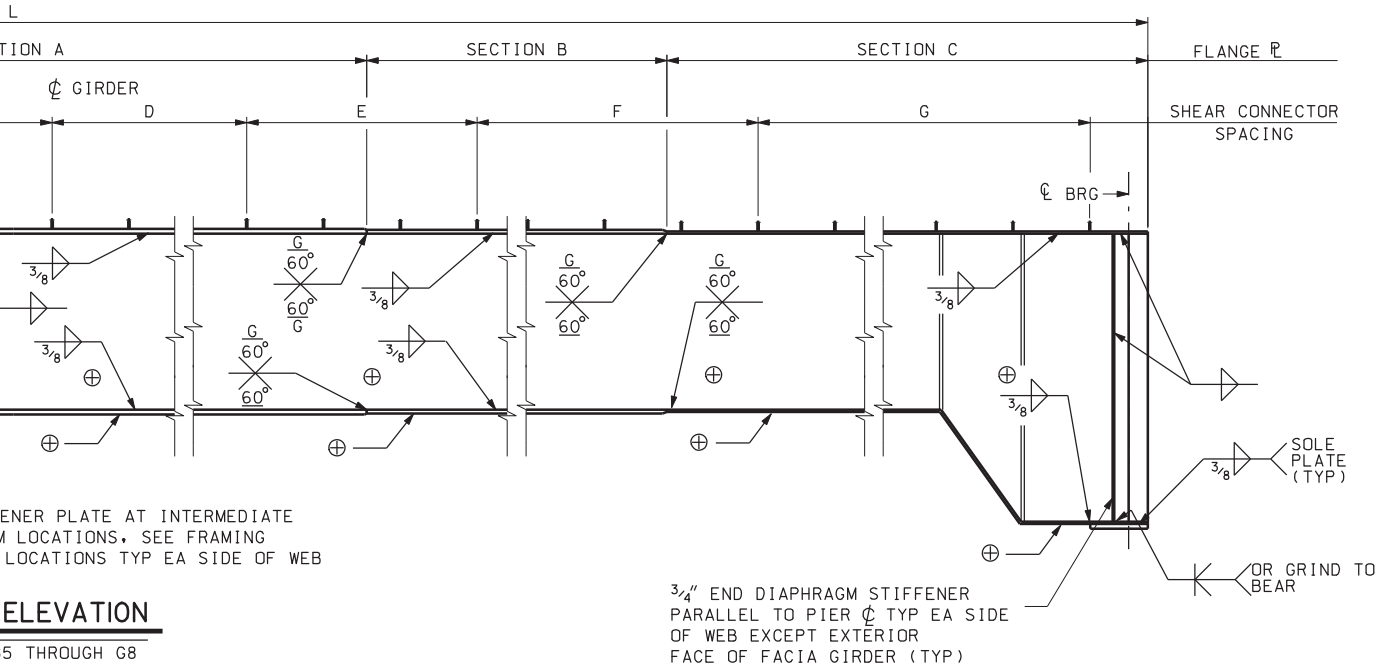


## ELEVATION

5 THROUGH G8

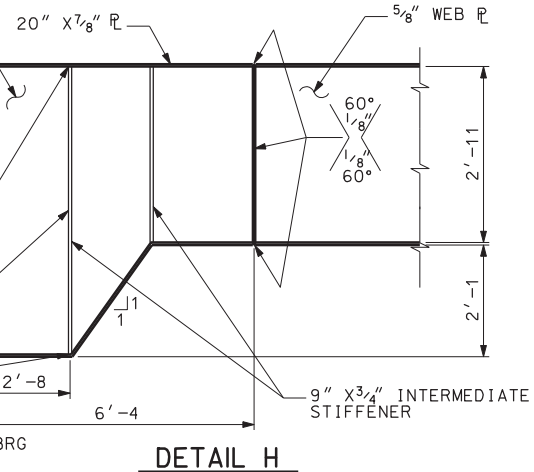


## DETAIL H

(END DIAPHRAGM STIFFENER NOT SHOWN)

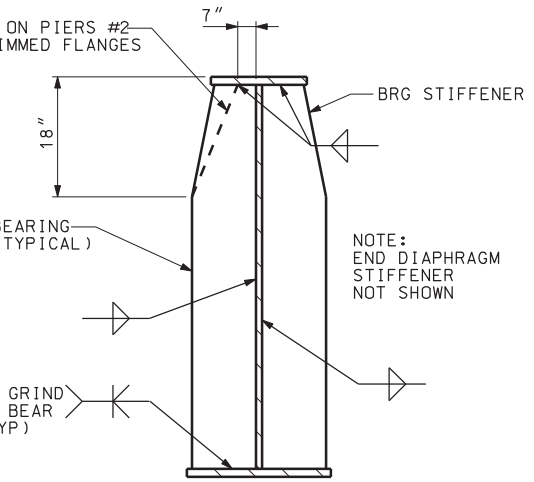


## SECTION A-A

## NOTES

1. SEE GIRDER DETAILS 1 OF 3 SHEET FOR GIRDERS G1 THROUGH G4 AND G9 THROUGH G20 INFORMATION.
2. PERFORM CHARPY V-NOTCH TOUGHNESS TESTS ON ALL MAIN LOAD CARRYING MEMBERS SUBJECT TO TENSION STRESS, INDICATED BY ⊕. TEST RESULTS MUST MEET REQUIREMENTS FOR ZONE 2.
3. ALL DIMENSIONS SHOWN ARE HORIZONTAL. TAKE VERTICAL GRADE INTO ACCOUNT WHEN DETERMINING FINAL LENGTH FOR FABRICATION. SEE GIRDER DETAILS 3 OF 3 SHEET FOR DIMENSIONS AND CAMBER SCHEDULES.
4. ALL INTERMEDIATE DIAPHRAGM STIFFENERS AND BEARING STIFFENERS ARE NORMAL TO THE WEB. END DIAPHRAGM STIFFENERS ARE PARALLEL TO PIER CENTERLINE OF BEARING.
5. CENTERLINES OF GIRDERS ARE PARALLEL TO THE CENTERLINES OF EXISTING FASCIA GIRDER.
6. SHEAR CONNECTORS, BOLTS, AND STIFFENERS ARE INCLUDED IN THE CONTRACT PRICE FOR STRUCTURAL STEEL.
7. SEE BEARING DETAILS SHEET FOR SOLE PLATE AND BEARING DETAILS.
8. USE GRADE 36 MINIMUM STRUCTURAL STEEL FOR GIRDER WEBS, FLANGES, AND STIFFENERS.
9. CONFORM TO THE REQUIREMENTS OF THE ANSI/AASHTO/AWS BRIDGE WELDING CODE D1.5. FOR WELDING, WELDER QUALIFICATIONS, PREQUALIFICATION OF WELD DETAILS AND INSPECTION OF WELDS
10. THE METHODS OF JOINT PREPARATION FOR WELDING SHOWN ON THE PLANS ARE BASED ON THE USE OF MANUAL SHIELDED METAL-ARC WELDING. THE USE OF THIS OR ANY OTHER WELDING PROCESS IS SATISFACTORY ONLY AFTER THE WELDING PROCEDURE HAS BEEN SUBMITTED BY THE CONTRACTOR AND APPROVED BY THE ENGINEER.
11. USE THE MINIMUM SIZED WELDS REQUIRED BY ANSI/AASHTO/AWS BRIDGE WELDING CODE D1.5 FOR THE THICKNESS OF THE MATERIAL JOINED FOR ALL STRENGTH FILLET WELDS UNLESS OTHERWISE SPECIFIED.
12. USE MINIMUM 1/4" WELD.
13. DIMENSIONS SHOWN ON THE PLANS ASSUME THE AMBIENT TEMPERATURE OF THE GIRDER TO BE 70°F±. CORRECT THE LENGTH USED IN FABRICATION AT THE RATE OF 1/16" PER EACH 100' OF LENGTH FOR EVERY 10°F DIFFERENCE IN TEMPERATURE TO ALLOW FOR EXPANSION AND CONTRACTION.
14. STRUCTURAL STEEL CONFORMING TO AASHTO M 270 GRADE 36 IS ACCEPTABLE FOR USE IN SECONDARY MEMBERS SUCH AS DIAPHRAGMS, STIFFENERS, MASONRY PLATES, ETC. EXCEPT WHEN UNPAINTED WEATHERING STEEL IS SPECIFIED.
15. FIELD WELDING TO GIRDERS IS NOT PERMITTED EXCEPT WHERE NOTED.

| NO. | DATE | BY | REMARKS |
|---|---|---|---|

REVISIONS

Baker

UTAH DEPARTMENT OF TRANSPORTATION
SALT LAKE CITY, UTAH
STRUCTURES DIVISION

DESIGN JPD 12/04 CHECK AW 12/04
DRAWN GCK 12/04 CHECK JPD 12/04
QUANT. CHECK

APPROVAL RECOMM. DATE DESIGN ENGR.
APPROVED FOR USE BY UDOT DATE UDOT BRIDGE ENGR.

I-15: UTAH COUNTY
U.P.R.R. & US-89 OVERPASS
GIRDER DETAILS 2 OF 3

PROJECT NUMBER SP-15-6(52)241

UTAH
COUNTY

C-343W2
DRG. NO.

SHT. 16 OF 35

## CAMBER SCHEDULE 1 OF 2 (SPANS 1, 3, 4, & 5)

| GIRDER NO. | CAMBER ORDINATES (FT) | | | | | | | | | | |
|---|---|---|---|---|---|---|---|---|---|---|---|
| | ℄ BRG | 0.1 | 0.2 | 0.3 | 0.4 | 0.5 | 0.6 | 0.7 | 0.8 | 0.9 | ℄ BRG |
| G1 | 0.000 | 0.039 | 0.073 | 0.098 | 0.114 | 0.119 | 0.114 | 0.098 | 0.073 | 0.039 | 0.000 |
| G2 | 0.000 | 0.040 | 0.074 | 0.100 | 0.116 | 0.121 | 0.116 | 0.100 | 0.074 | 0.040 | 0.000 |
| G3 | 0.000 | 0.045 | 0.083 | 0.111 | 0.128 | 0.134 | 0.128 | 0.111 | 0.083 | 0.045 | 0.000 |
| G4 | 0.000 | 0.044 | 0.082 | 0.109 | 0.127 | 0.133 | 0.127 | 0.109 | 0.109 | 0.044 | 0.000 |
| G5 - G8 | SEE CAMBER SCHEULE 2 OF 2 FOR G5 THROUGH G8 DETAILS | | | | | | | | | | |
| G9 | 0.000 | 0.043 | 0.079 | 0.106 | 0.123 | 0.129 | 0.123 | 0.106 | 0.079 | 0.043 | 0.000 |
| G10 | 0.000 | 0.043 | 0.080 | 0.107 | 0.124 | 0.130 | 0.124 | 0.107 | 0.080 | 0.043 | 0.000 |
| G11 | 0.000 | 0.045 | 0.083 | 0.111 | 0.129 | 0.135 | 0.129 | 0.111 | 0.083 | 0.045 | 0.000 |
| G12 | 0.000 | 0.044 | 0.082 | 0.110 | 0.127 | 0.133 | 0.127 | 0.110 | 0.082 | 0.044 | 0.000 |
| G13 | 0.000 | 0.030 | 0.056 | 0.075 | 0.087 | 0.091 | 0.087 | 0.075 | 0.056 | 0.030 | 0.000 |
| G14 | 0.000 | 0.029 | 0.054 | 0.073 | 0.085 | 0.089 | 0.085 | 0.073 | 0.054 | 0.029 | 0.000 |
| G15 | 0.000 | 0.033 | 0.061 | 0.082 | 0.096 | 0.101 | 0.096 | 0.082 | 0.061 | 0.033 | 0.000 |
| G16 | 0.000 | 0.032 | 0.060 | 0.081 | 0.095 | 0.099 | 0.095 | 0.081 | 0.060 | 0.032 | 0.000 |
| G17 | 0.000 | 0.035 | 0.065 | 0.088 | 0.102 | 0.107 | 0.102 | 0.088 | 0.065 | 0.035 | 0.000 |
| G18 | 0.000 | 0.035 | 0.064 | 0.087 | 0.101 | 0.106 | 0.101 | 0.087 | 0.064 | 0.035 | 0.000 |
| G19 | 0.000 | 0.037 | 0.068 | 0.092 | 0.108 | 0.113 | 0.108 | 0.092 | 0.068 | 0.037 | 0.000 |
| G20 | 0.000 | 0.037 | 0.070 | 0.094 | 0.109 | 0.114 | 0.109 | 0.094 | 0.094 | 0.037 | 0.000 |

## CAMBER SCHEDULE 2 OF 2 (SPAN 2)

| GIRDER NO. | CAMBER ORDINATES (FT) | | | | | | | | | | |
|---|---|---|---|---|---|---|---|---|---|---|---|
| | ℄ BRG | 0.1 | 0.2 | 0.3 | 0.4 | 0.5 | 0.6 | 0.7 | 0.8 | 0.9 | ℄ BRG |
| G5 | 0.000 | 0.073 | 0.135 | 0.181 | 0.209 | 0.218 | 0.209 | 0.181 | 0.135 | 0.073 | 0.000 |
| G6 | 0.000 | 0.073 | 0.136 | 0.182 | 0.210 | 0.220 | 0.210 | 0.182 | 0.136 | 0.073 | 0.000 |
| G7 | 0.000 | 0.080 | 0.147 | 0.197 | 0.227 | 0.238 | 0.227 | 0.197 | 0.147 | 0.080 | 0.000 |
| G8 | 0.000 | 0.081 | 0.151 | 0.201 | 0.233 | 0.244 | 0.233 | 0.201 | 0.151 | 0.081 | 0.000 |

## GIRDER SCHEDULE 1 OF

| GIRDER NO. | LENGTH ℄ TO ℄ OF BRGS | L LENGTH OUT TO OUT | GIRDER BEARING | WEB | PLATE LE | | | SECTIO |
|---|---|---|---|---|---|---|---|---|
| | | | | | SECTION A | | | |
| | | | | | TOP PL | BOTTOM PL | TOP PL | |
| G1 | 86' - 2 1/2 | 87' - 4 1/2 | S 34 41' 00.1" E | 5/8" X 60" | 1 1/8" X 10" X 45' - 0 | 1 5/8" X 16" X 44' - 0 | - | |
| G2 | 86' - 2 1/2 | 87' - 4 1/2 | S 34 41' 00.1" E | 5/8" X 60" | 1 1/8" X 10" X 45' - 0 | 1 5/8" X 16" X 44' - 0 | - | |
| G3 | 89' - 6 1/8 | 90' - 8 | S 35 48' 00.3" E | 5/8" X 60" | 1 1/4" X 10" X 52' - 0 | 1 3/4" X 16" X 41' - 0 | - | |
| G4 | 89' - 6 1/8 | 90' - 8 | S 35 48' 00.3" E | 5/8" X 60" | 1 1/4" X 10" X 52' - 0 | 1 3/4" X 16" X 41' - 0 | - | |
| G5 - G8 | SEE GIRDER SCHEDULE 2 O | | | | | | | |
| G9 | 87' -3 3/4 | 88' - 5 1/2 | S 31 37' 07.5" E | 5/8" X 60" | 1 1/8" X 10" X 46' - 0 | 1 5/8" X 16" X 44' - 0 | - | |
| G10 | 87' -3 3/4 | 88' - 5 1/2 | S 31 37' 07.5" E | 5/8" X 60" | 1 1/8" X 10" X 46' - 0 | 1 5/8" X 16" X 44' - 0 | - | |
| G11 | 89' - 10 | 91' - 0 | S 32 36' 01.7" E | 5/8" X 60" | 1 1/4" X 10" X 52' - 0 | 1 3/4" X 16" X 41' - 0 | - | |
| G12 | 89' - 10 | 91' - 0 | S 32 36' 01.7" E | 5/8" X 60" | 1 1/4" X 10" X 52' - 0 | 1 3/4" X 16" X 41' - 0 | - | |
| G13 | 78' - 7 | 79' - 9 | S 30 08' 02.3" E | 5/8" X 60" | 3/4" X 10" X 79' - 9 | 1 1/2" X 16" X 45' - 0 | - | |
| G14 | 78' - 7 | 79' - 9 | S 30 08' 02.3" E | 5/8" X 60" | 3/4" X 10" X 79' - 9 | 1 1/2" X 16" X 45' - 0 | - | |
| G15 | 80' - 7 3/4 | 81' - 10 | S 31 03' 32.1" E | 5/8" X 60" | 7/8" X 10" X 31' - 3 | 1 1/2" X 16" X 50' - 3 | - | |
| G16 | 80' - 7 3/4 | 81' - 10 | S 31 03' 32.1" E | 5/8" X 60" | 7/8" X 10" X 31' - 3 | 1 1/2" X 16" X 50' - 3 | - | |
| G17 | 82' - 4 | 83' - 6 | S 28 42' 11.1" E | 5/8" X 60" | 7/8" X 10" X 35' - 0 | 1 1/2" X 16" X 52' - 0 | - | |
| G18 | 82' - 4 | 83' - 6 | S 28 42' 11.1" E | 5/8" X 60" | 7/8" X 10" X 35' - 0 | 1 1/2" X 16" X 52' - 0 | - | |
| G19 | 84' - 3 | 85' - 5 | S 29 34' 39.7" E | 5/8" X 60" | 1" X 10" X 36' - 0 | 1 1/2" X 16" X 55' - 6 | - | |
| G20 | 84' - 3 | 85' - 5 | S 29 34' 39.7" E | 5/8" X 60" | 1" X 10" X 36' - 0 | 1 1/2" X 16" X 55' - 6 | - | |

## GIRDER SCHEDULE

| GIRDER NO. | LENGTH ℄ TO ℄ OF BRGS | L LENGTH OUT TO OUT | GIRDER BEARING | WEB * | PLATE LE | | | SECTIO |
|---|---|---|---|---|---|---|---|---|
| | | | | | SECTION A | | | |
| | | | | | TOP PL | BOTTOM PL | TOP PL | |
| G5 | 84' - 9 3/4 | 86' - 0 | S 33 09' 32.9" E | 5/8" X 60" | 1 1/4" X 20" X 39' - 0 | 2 1/4" X 22" X 31' - 0 | - | |
| G6 | 84' - 9 3/4 | 86' - 0 | S 33 09' 32.9" E | 5/8" X 60" | 1 1/4" X 20" X 39' - 0 | 2 1/4" X 22" X 31' - 0 | - | |
| G7 | 87' - 7 3/4 | 88' - 9 | S 34 12' 24.3" E | 5/8" X 60" | 1 1/2" X 20" X 48' - 0 | 2 1/4" X 22" X 41' - 0 | - | |
| G8 | 87' - 7 3/4 | 88' - 9 | S 34 12' 24.3" E | 5/8" X 60" | 1 1/2" X 20" X 48' - 0 | 2 1/4" X 22" X 41' - 0 | - | |

* SEE DETAIL ON GIRDER DETAILS 2 OF 3 SHEET FOR WEB TAPER

DGN File: IP_PWPdms1717\4433_C343-17_GirderDtl_3.dgn
02-MAY-2005

| QUANTITIES STRUCTURAL STEEL | |
|---|---|
| GIRDERS | 420,500 LBS |

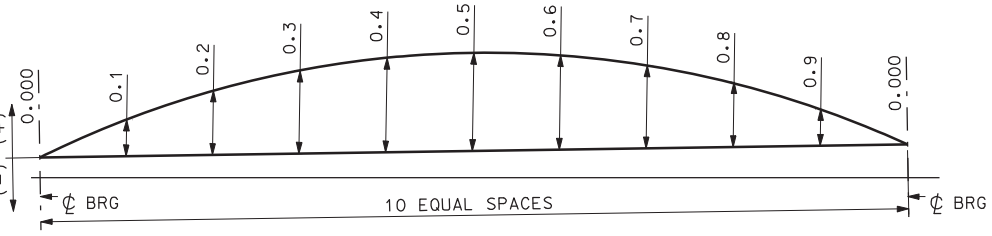


## CAMBER DIAGRAM

## NOTES

1. CAMBER ORDINATE IS FOR DEAD LOAD DEFLECTION ONLY AT THE TENTH POINTS ALONG THE GIRDER. THE FABRICATOR IS RESPONSIBLE FOR CORRECTIONS TO CAMBER BASED ON GRADE.

**2 (SPANS 1, 3, 4, & 5)**

| NGTHS N B | SECTION C | | SHEAR CONNECTOR SPACING | | | | ℄ BRG TO END OF GIRDER |
|---|---|---|---|---|---|---|---|
| BOTTOM PL | TOP PL | BOTTOM PL | D | E | F | G | |
| 1 1/8" X 16" X 8' - 0 | 3/4" X 10" X 21' - 2 1/4 | 3/4" X 16" X 13' - 8 1/4 | 16.5 SPA @16" | 7 SPA @14" | 12 SPA @10" | 2 SPA @ 6" | 7" |
| 1 1/8" X 16" X 8' - 0 | 3/4" X 10" X 21' - 2 1/4 | 3/4" X 16" X 13' - 8 1/4 | 16.5 SPA @16" | 7 SPA @14" | 12 SPA @10" | 2 SPA @ 6" | 7" |
| 1 1/4" X 16" X 10' - 0 | 3/4" X 10" X 19' - 4 | 3/4" X 16" X 14' - 10 | 16.5 SPA @16" | 7 SPA @14" | 12 SPA @10" | 4 SPA @8" | 6 15/16" |
| 1 1/4" X 16" X 10' - 0 | 3/4" X 10" X 19' - 4 | 3/4" X 16" X 14' - 10 | 16.5 SPA @16" | 7 SPA @14" | 12 SPA @10" | 4 SPA @8" | 6 15/16" |
| F 2 FOR G5 THROUGH G8 DETAILS | | | | | | | |
| 1 1/8" X 16" X 8' - 0 | 3/4" X 10" X 21' - 2 3/4 | 3/4" X 16" X 14' - 2 3/4 | 16.5 SPA @16" | 16 SPA @12" | 4 SPA @10" | 1 SPA @ 5" | 6 7/8" |
| 1 1/8" X 16" X 8' - 0 | 3/4" X 10" X 21' - 2 3/4 | 3/4" X 16" X 14' - 2 3/4 | 16.5 SPA @16" | 16 SPA @12" | 4 SPA @10" | 1 SPA @ 5" | 6 7/8" |
| 1 1/4" X 16" X 10' - 0 | 3/4" X 10" X 19' - 6 | 3/4" X 16" X 15' - 0 | 15 SPA @16" | 18 SPA @ 12" | 6 SPA @10" | - | 7" |
| 1 1/4" X 16" X 10' - 0 | 3/4" X 10" X 19' - 6 | 3/4" X 16" X 15' - 0 | 15 SPA @16" | 18 SPA @ 12" | 6 SPA @10" | - | 7" |
| - | - | 3/4" X 16" X 17' - 4 1/2 | 16 SPA @16" | 12 SPA @12" | 5 SPA @ 10" | - | 7" |
| - | - | 3/4" X 16" X 17' - 4 1/2 | 16 SPA @16" | 12 SPA @12" | 5 SPA @ 10" | - | 7" |
| - | 3/4" X 10" X 25' - 3 1/2 | 3/4" X 16" X 15' - 9 1/2 | 18 SPA @ 16" | 12 SPA @12" | 3 SPA @ 10" | - | 7 1/8" |
| - | 3/4" X 10" X 25' - 3 1/2 | 3/4" X 16" X 15' - 9 1/2 | 18 SPA @ 16" | 12 SPA @12" | 3 SPA @ 10" | - | 7 1/8" |
| - | 3/4" X 10" X 24' - 3 | 3/4" X 16" X 15' - 9 | 18 SPA @16" | 11 SPA @12" | 5 SPA @10" | - | 7" |
| - | 3/4" X 10" X 24' - 3 | 3/4" X 16" X 15' - 9 | 18 SPA @16" | 11 SPA @12" | 5 SPA @10" | - | 7" |
| - | 3/4" X 10" X 24' - 8 1/2 | 3/4" X 16" X 14' - 11 1/2 | 19 SPA @16" | 9 SPA @12" | 7 SPA @10" | - | 7" |
| - | 3/4" X 10" X 24' - 8 1/2 | 3/4" X 16" X 14' - 11 1/2 | 19 SPA @16" | 9 SPA @12" | 7 SPA @10" | - | 7" |

**2 OF 2 (SPAN 2)**

| NGTHS N B | SECTION C | | SHEAR CONNECTOR SPACING | | | | ℄ BRG TO END OF GIRDER |
|---|---|---|---|---|---|---|---|
| BOTTOM PL | TOP PL | BOTTOM PL | D | E | F | G | |
| 1 3/4" X 22" X 10' - 0 | 7/8" X 20" X 23' - 6 | 1 1/4" X 22" X 17' - 6 | 9.5 SPA @ 16" | 19 SPA @ 12" | 1 SPA @6" | - | 7 1/8" |
| 1 3/4" X 22" X 10' - 0 | 7/8" X 20" X 23' - 6 | 1 1/4" X 22" X 17' - 6 | 9.5 SPA @ 16" | 19 SPA @ 12" | 1 SPA @6" | - | 7 1/8" |
| 1 3/4" X 22" X 8' - 6 | 7/8" X 20" X 20' - 4 1/2 | 1 1/4" X 22" X 15' - 4 1/2 | 16 SPA @ 16" | 20 SPA @ 12" | 1 SPA @6" | - | 6 5/8" |
| 1 3/4" X 22" X 8' - 6 | 7/8" X 20" X 20' - 4 1/2 | 1 1/4" X 22" X 15' - 4 1/2 | 16 SPA @ 16" | 20 SPA @ 12" | 1 SPA @6" | - | 6 5/8" |

| NO. | DATE | BY | REMARKS |
|---|---|---|---|
| | | | |

REVISIONS

UTAH DEPARTMENT OF TRANSPORTATION
SALT LAKE CITY, UTAH
STRUCTURES DIVISION

Baker

DESIGN JPD 12/04 CHECK AW 12/04
DRAWN GCK 12/04 CHECK JPD 12/04
QUANT. AW 01/05 CHECK JPD 01/05

APPROVAL RECOMM. DATE DESIGN ENGR.
APPROVED FOR USE BY UDOT DATE UDOT BRIDGE ENGR.

I-15: UTAH COUNTY
U.P.R.R. & US-89 OVERPASS
GIRDER DETAILS 3 OF 3

PROJECT NUMBER SP-15-6(52)241

UTAH
COUNTY

C-343W2
DRG. NO.

SHT. 17 OF 35

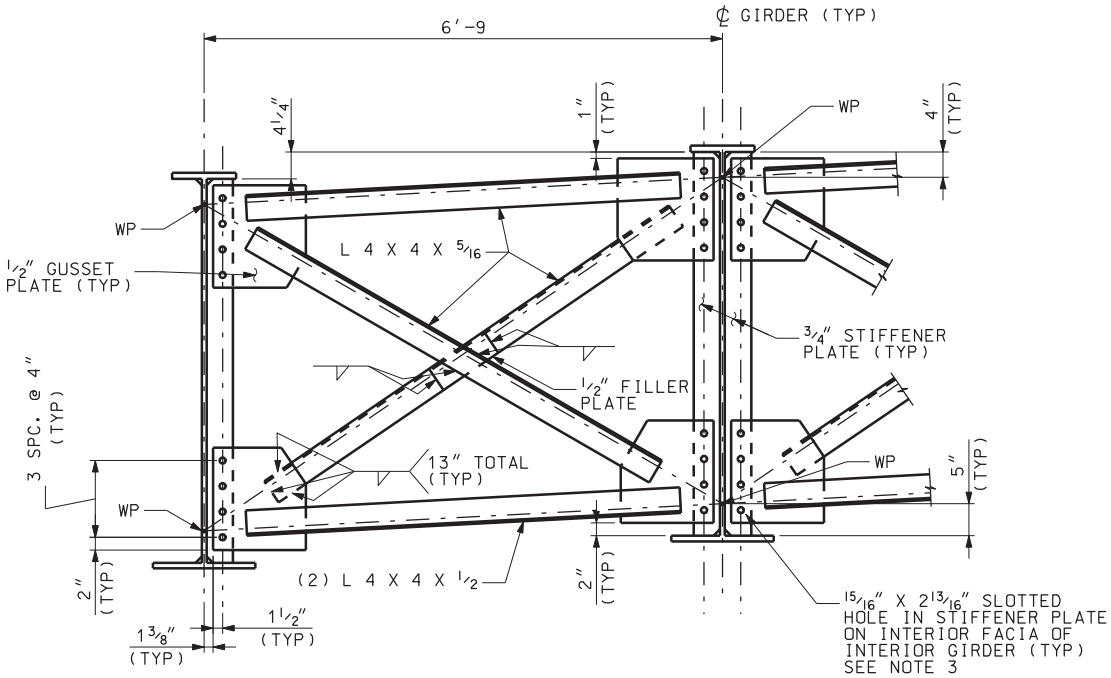


## INTERMEDIATE CROSS FRAME

SPANS 1,3,4,5

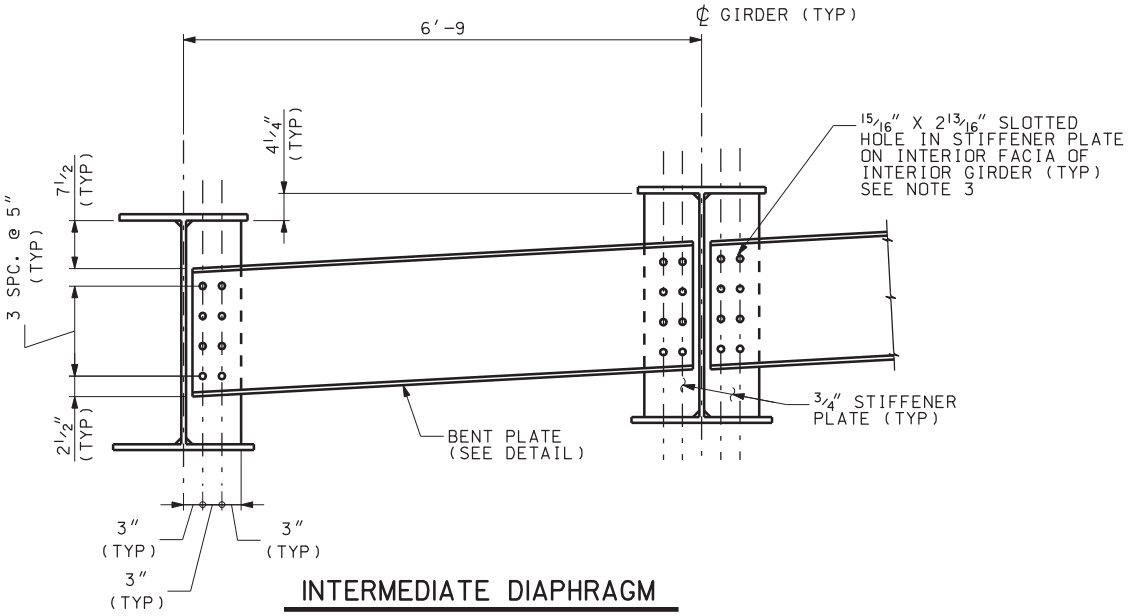


## INTERMEDIATE DIAPHRAGM

SPAN 2

DGN File:IP_PWPcdms1717\4433_C343-18_XFrames&Diaph.dgn
02-MAY-2005

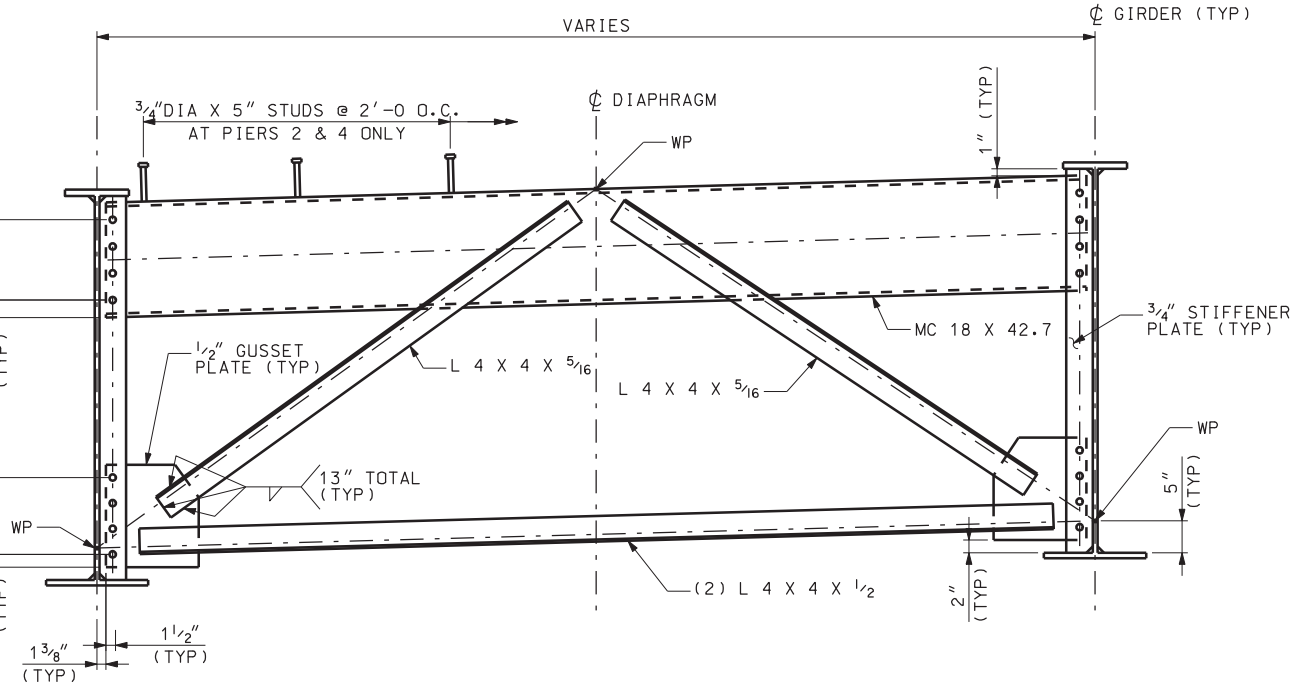


## END DIAPHRAGM

| QUANTITIES STRUCTURAL STEEL | |
|---|---|
| INTERMEDIATE DIAPHRAGMS | 4181 LBS |
| INTERMEDIATE CROSS FRAMES | 26712 LBS |
| END DIAPHRAGMS | 42084 LBS |

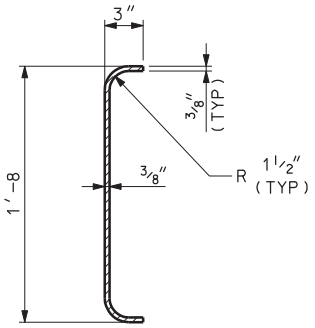


## BENT PLATE DETAIL

## NOTES

1. ALL BOLTED CONNECTIONS ARE SLIP CRITICAL
2. ALL BOLTS ARE 7/8" DIA. CONFORMING TO ASTM A325. USE 1 1/16" HOLES FOR BOLTS UNLESS NOTED OTHERWISE.
3. PLACE SLOTTED HOLES IN INTERMEDIATE STIFFENER PLATES ON INTERIOR FACIA OF INTERIOR GIRDER TO ALLOW DIFFERENTIAL DEFLECTION OF NEW GIRDERS AND OLD GIRDERS. ALIGN HOLES TO ALLOW GIRDER TO MOVE DOWN. SEE CONSTRUCTION SEQUENCE SHEET.
4. BLAST CLEAN (CLASS A) ALL BOLTED CONTACT SURFACES.
5. ALL WELDS 1/4" UNLESS OTHERWISE NOTED.
6. INTERMEDIATE CROSS FRAMES ARE NORMAL TO THE WEB. END DIAPHRAGMS ARE PARALLEL TO BEARING LINE.
7. INCLUDE CROSS FRAME AND DIAPHRAGM MEMBERS AND CONNECTIONS IN THE CONTRACT PRICE FOR STRUCTURAL STEEL.
8. USE GRADE 36 MIN. FOR CROSS FRAME AND DIAPHRAGM SHAPES AND GUSSET PLATES.

| NO. | DATE | BY | REMARKS |
|---|---|---|---|
| | | | |

REVISIONS

UTAH DEPARTMENT OF TRANSPORTATION
SALT LAKE CITY, UTAH
STRUCTURES DIVISION

Baker

DESIGN MSA 12/04 CHECK AW 12/04
DRAWN GCK 12/04 CHECK JPD 12/04
QUANT. AW 01/05 CHECK JPD 01/05

APPROVAL RECOMM. DATE DESIGN ENGR.
APPROVED FOR USE BY UDOT DATE UDOT BRIDGE ENGR.

I-15: UTAH COUNTY
U.P.R.R. & US-89 OVERPASS
CROSS FRAMES & DIAPHRAGMS

PROJECT NUMBER SP-15-6(52)241

UTAH
COUNTY

C-343W2
DRG. NO.

SHT. 18 OF 35

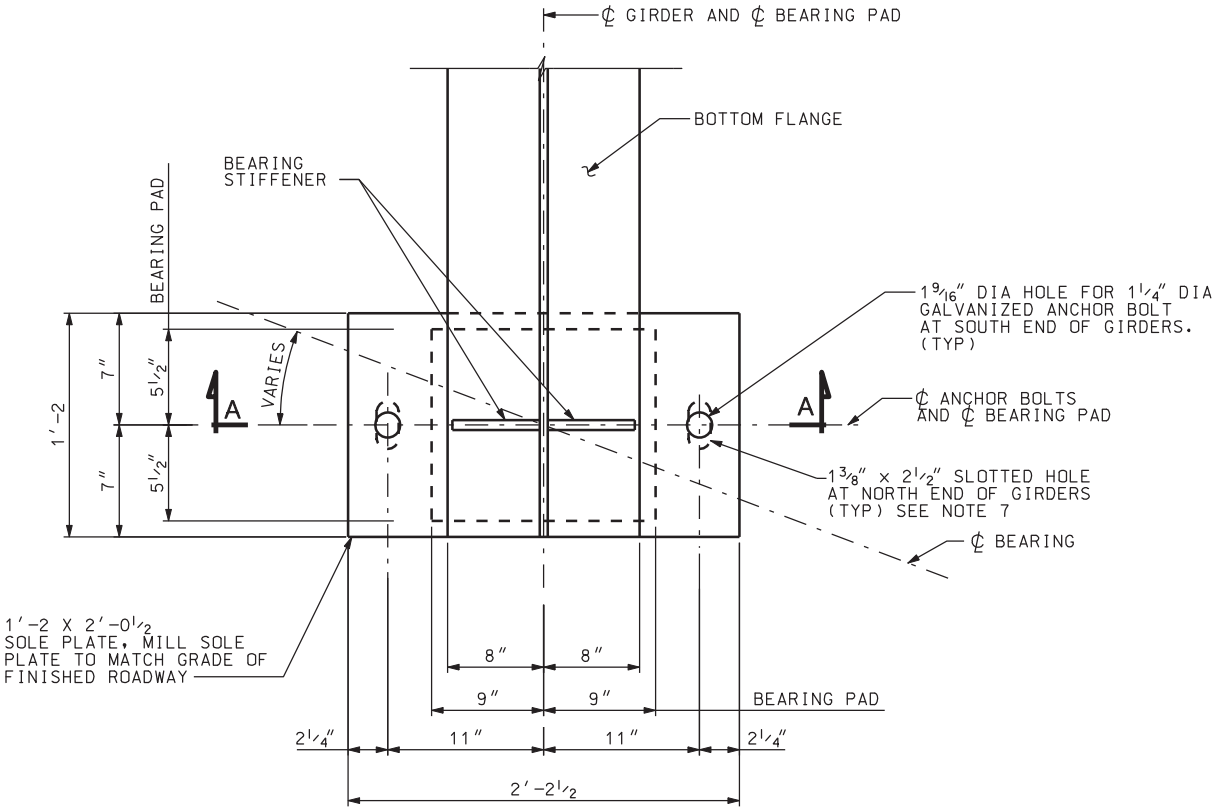


## PLAN

(END DIAPHRAGM STIFFENER NOT SHOWN FOR CLARITY)

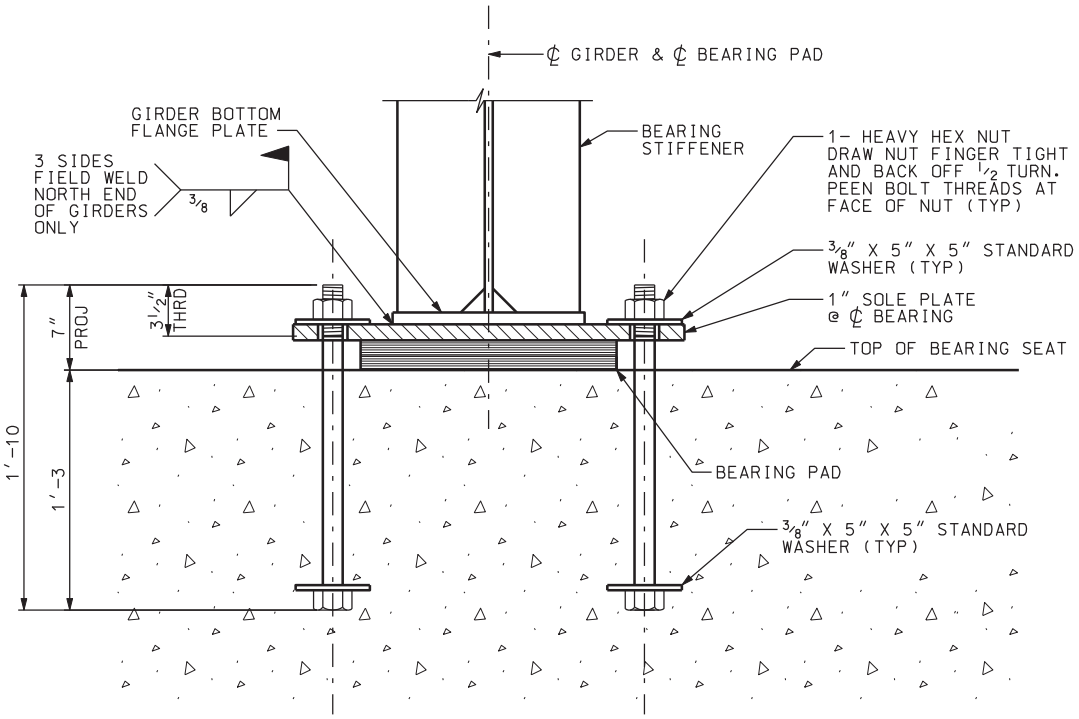


## SECTION A-A

## SECTION A'-A'

(SIMILAR)

(END DIAPHRAGM STIFFENER NOT SHOWN FOR CLARITY)

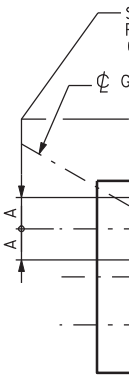


FACE OF

## PIER C

| ANCHO | |
|---|---|
| LOCATION | GIRDE |
| BENT #2 | G1 |
| | G3 |
| BENTS #2 & #3 | G5 |
| | G7 |
| BENTS #3 & #4 | G9 & |
| | G11 |
| BENTS #4 & #5 | G13 |
| | G15 |
| BENT #5 | G17 |
| | G19 |

DGN File:IP_PWPcdms1717\4433_C343-19_Br-Dtl.dgn

02-MAY-2005

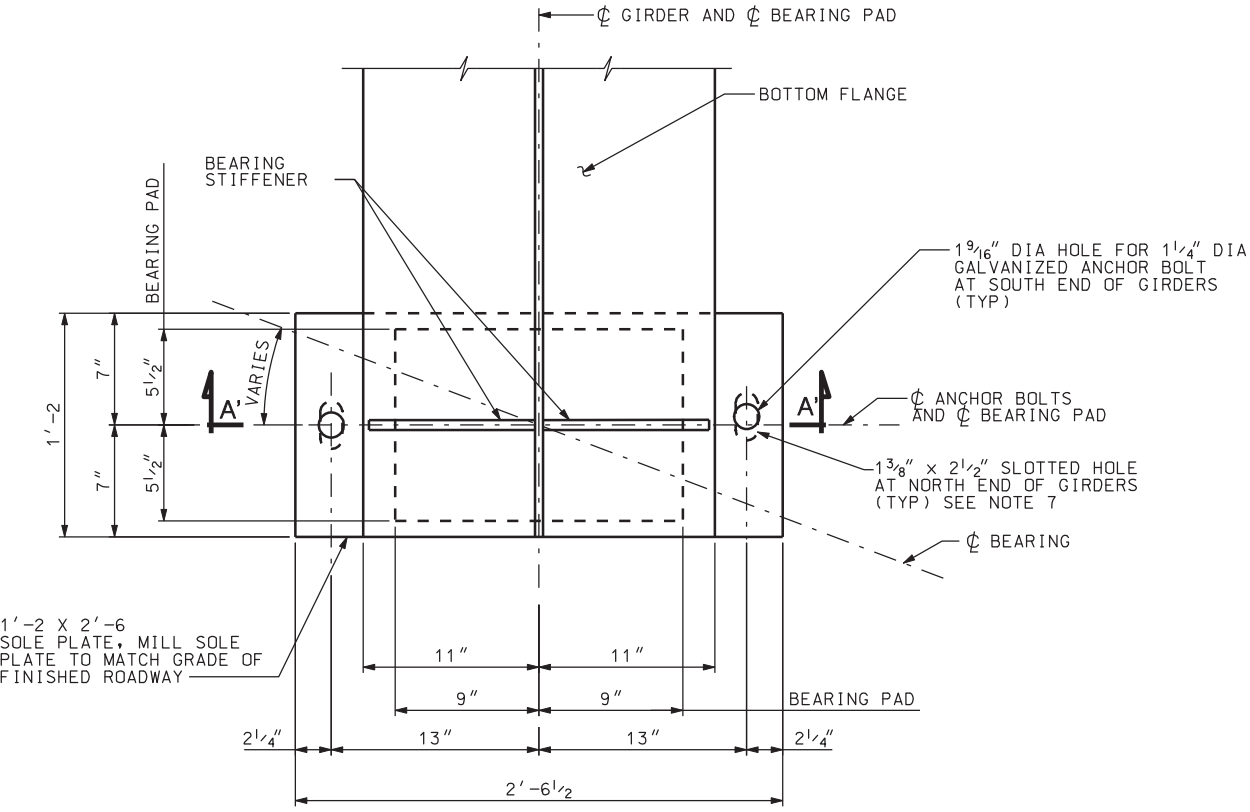


## PLAN

## PIERS #2 & #3 (SPAN 2 ONLY)

(END DIAPHRAGM STIFFENER NOT SHOWN FOR CLARITY)

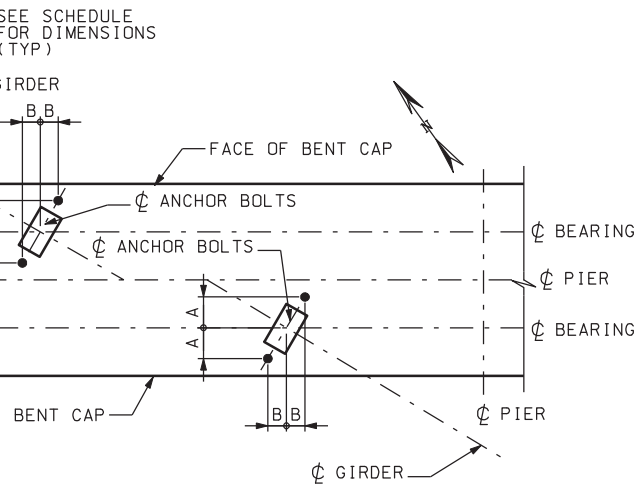


## CAP PART PLAN (NORTHBOUND)

(SOUTHBOUND SIMILAR)

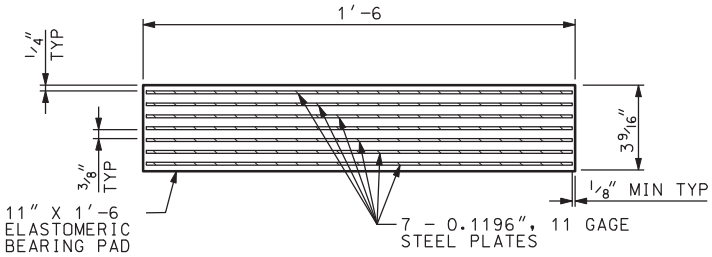


## BEARING PAD DETAIL

| R BOLT LOCATION SCHEDULE | | |
|---|---|---|
| ER SEAT | A | B |
| & G2 | 9 11/16 | 5 3/16 |
| & G4 | 9 13/16 | 5 |
| & G6 | 11 5/16 | 6 3/8 |
| & G8 | 11 7/16 | 6 3/16 |
| & G10 | 9 7/16 | 5 11/16 |
| & G12 | 9 1/2 | 5 1/2 |
| & G14 | 9 1/4 | 5 15/16 |
| & G16 | 9 3/8 | 5 3/4 |
| & G18 | 9 1/8 | 6 1/8 |
| & G20 | 9 1/4 | 6 |

## NOTES

1. INCLUDE ANCHOR BOLT AND BEARING ASSEMBLIES IN THE CONTRACT PRICE FOR STRUCTURAL STEEL.
2. ELASTOMER FOR BEARING PADS HARDNESS 50.
3. USE ASTM F-1554-99, GRADE 36 ANCHOR BOLTS.
4. GALVANIZE NUTS, WASHERS, AND ANCHOR BOLTS IN ACCORDANCE WITH AASHTO M232 (ASTM A153). ALL GALVANIZED STEEL THREADS ARE TO BE FREE FROM DEFECTS ALLOWING NUTS TO BE FREE RUNNING BY HAND FOR THE ENTIRE LENGTH OF THREADS.
5. FILL ANCHOR BOLT SOLE PLATE HOLES WITH SILICONE JOINT SEALER.
6. BEVEL SOLE PLATES TO MATCH GRADE OF FINISHED ROADWAY.
7. CENTER ANCHOR BOLTS IN THE SLOTTED HOLES AT 70°F. ADJUST 1/16" FOR EACH 10°F VARIATION IN ACCORDANCE WITH THE JOINT WIDTH TABLE ON EXPANSION JOINT DETAILS SHEET.
8. MANUFACTURE PREFORMED PAD IN ACCORDANCE TO ARTICLE 18.10.2 (DIVISION II CONSTRUCTION) OF CURRENT AASHTO SPECIFICATIONS.

| NO. | DATE | BY | REMARKS |
|---|---|---|---|

REVISIONS

Baker

UTAH DEPARTMENT OF TRANSPORTATION
SALT LAKE CITY, UTAH
STRUCTURES DIVISION

DESIGN AW 11/04 CHECK MSA 12/04
DRAWN GCK 11/04 CHECK AW 12/04
QUANT. CHECK

APPROVAL RECOMM. DATE DESIGN ENGR.
APPROVED FOR USE BY UDOT DATE UDOT BRIDGE ENGR.

I-15: UTAH COUNTY
U.P.R.R. & US-89 OVERPASS
BEARING DETAILS

PROJECT NUMBER SP-15-6(52)241

UTAH
COUNTY

C-343W2
DRG. NO.

SHT. 19 OF 35

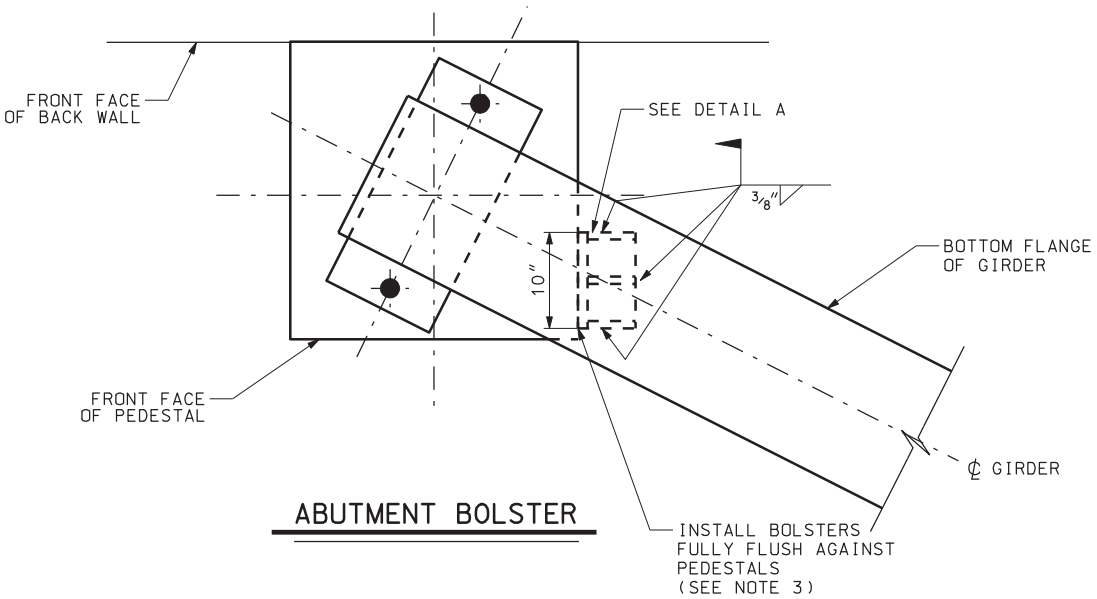


ABUTMENT BOLSTER

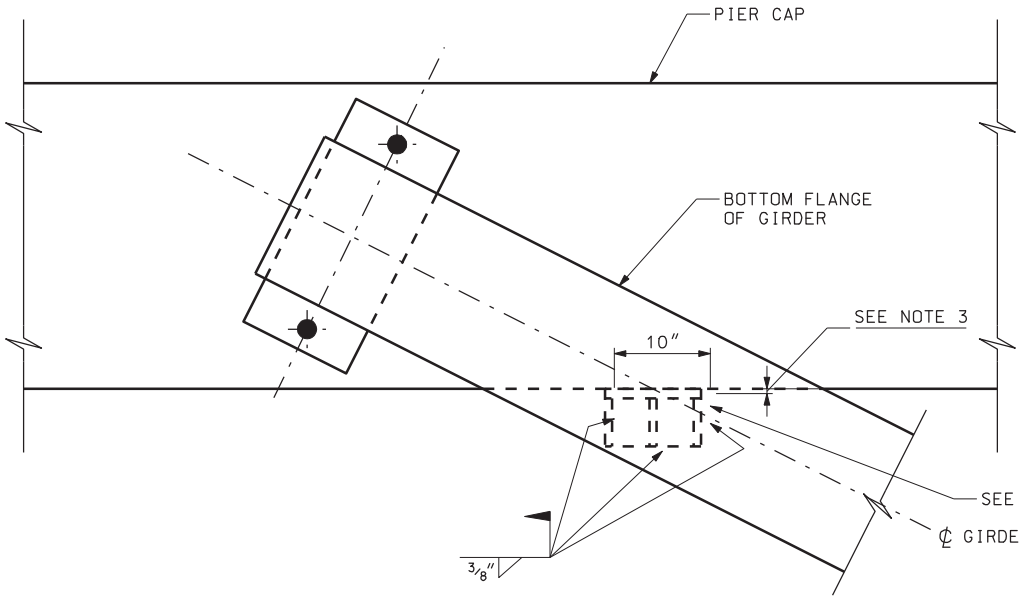


PIER BOLSTER

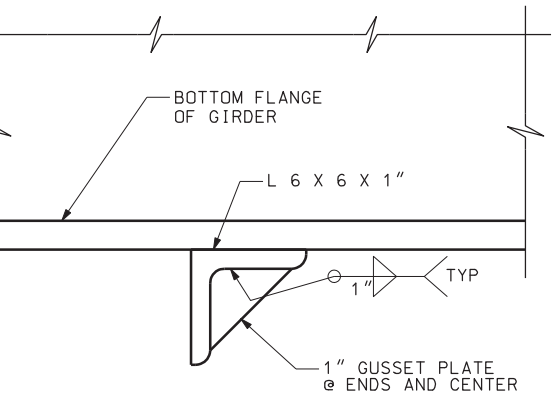


## DETAIL A

| LOCATION | BOLSTER INSTALLATION GAP SCHEDULE<br>AMBIENT TEMPERATURE<br>30° | 40° | 50° | 60° | 70° | 80° | 90° |
|---|---|---|---|---|---|---|---|
| EXP SIDE PIERS #2 | 5/16" | 1/4" | 1/4" | 3/16" | 3/16" | 1/8" | 1/8" |
| EXP SIDE PIERS #4 | 5/16" | 1/4" | 1/4" | 3/16" | 3/16" | 1/8" | 1/8" |

(PIERS #2 AND #4 EXPANSION SIDE ONLY)

| QUANTITIES<br>STRUCTURAL STEEL | |
|---|---|
| BOLSTERS | 7942 LBS |

IL A

## NOTES

1. INSTALL ABUTMENT BOLSTER ON ALL NEW AND EXISTING GIRDERS AT THE ABUTMENTS.
2. INSTALL PIER BOLSTERS ON ALL NEW AND EXISTING GIRDERS AT THE PIERS.
3. INSTALL BOLSTERS FLUSH AGAINST PIER CAPS AND PEDESTALS AT FIXED JOINTS. INSTALL BOLSTERS WITH REQUIRED GAP AT EXPANSION JOINTS. SEE BOLSTER INSTALLATION GAP SCHEDULE.
4. INCLUDE BOLSTERS IN THE CONTRACT PRICE FOR STRUCTURAL STEEL.

REVISIONS

| NO. | DATE | BY | REMARKS |
|---|---|---|---|

UTAH DEPARTMENT OF TRANSPORTATION
SALT LAKE CITY, UTAH
STRUCTURES DIVISION

Baker

DESIGN MSA 12/04 CHECK JPD 12/04
DRAWN GCK 12/04 CHECK JPD 12/04
QUANT. MSA 01/05 CHECK JPD 01/05

APPROVAL RECOMM. DATE DESIGN ENGR.
APPROVED FOR USE BY UDOT DATE UDOT BRIDGE ENGR.

I-15: UTAH COUNTY
U.P.R.R. & US-89 OVERPASS
SEISMIC RETROFIT DETAILS

PROJECT NUMBER SP-15-6(52)241

UTAH
COUNTY

C-343W2
DRG. NO.

SHT. 20 OF 35

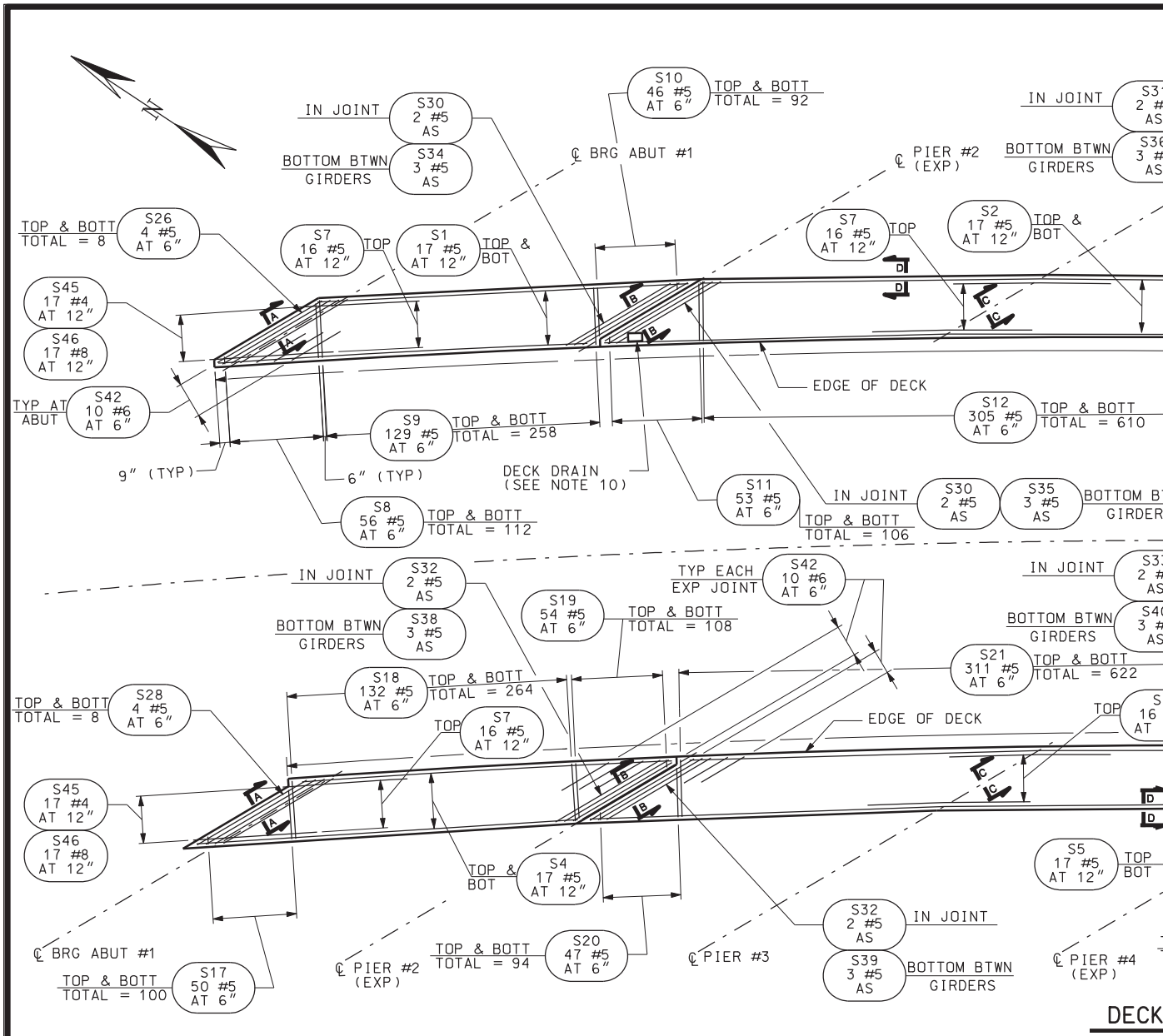


## DECK

DISTANCE FROM C-343

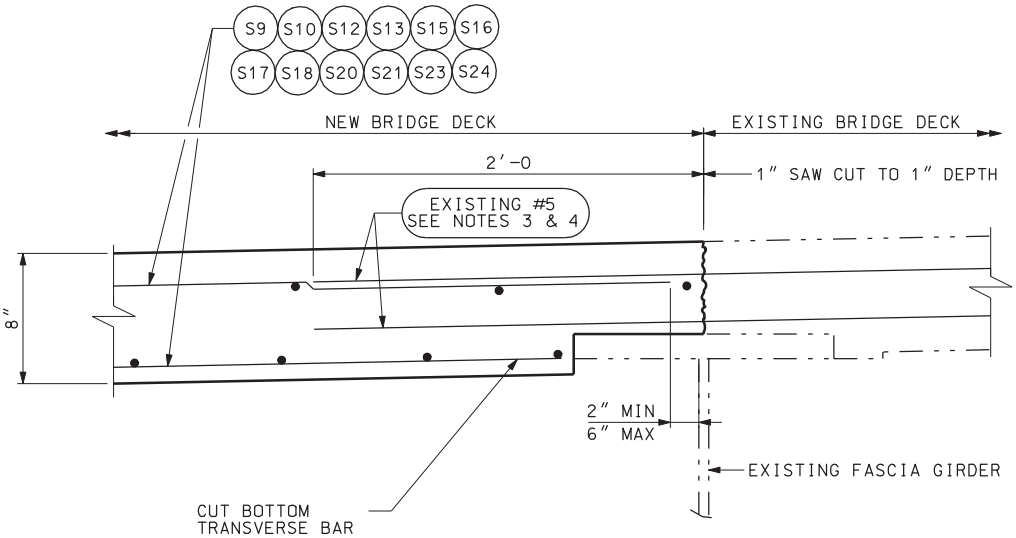


## SECTION D-D

(NORMAL CONDITION)

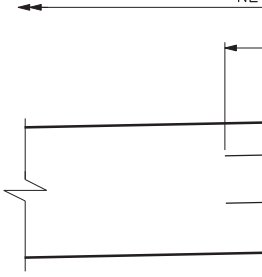


DGN File: IP_PWPcdms1717\4433_C343-21_DeckPln.dgn

02-MAY-2005

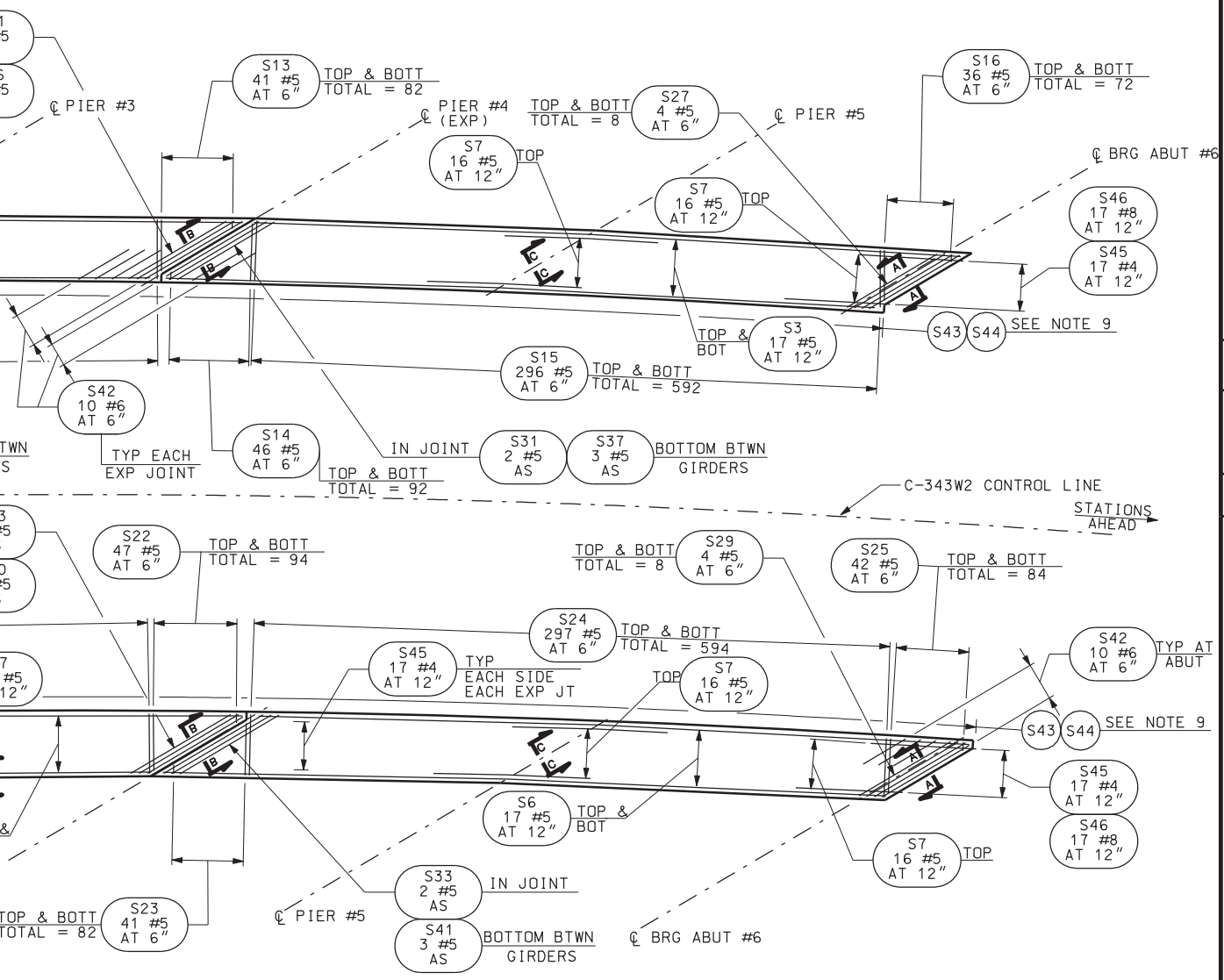


## PLAN

3W2 CONTROL LINE N.T.S.

| QUANTITIES STRUCTURAL CONCRETE | |
|---|---|
| DECK | 362.0 CY |

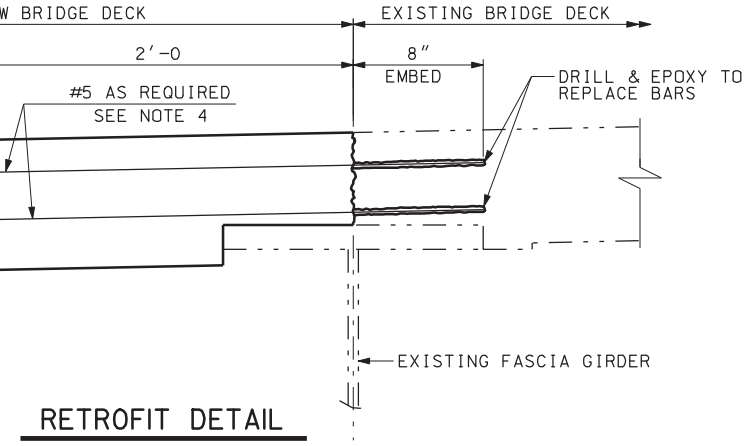


## RETROFIT DETAIL

REINFORCEMENT BAR REPLACEMENT)

## NOTES

1. SEE APPROACH SLAB DETAILS SHEET FOR SECTION A-A.
2. SEE DECK DETAILS SHEET FOR SECTION B-B AND C-C.
3. EXISTING DECK SLAB TRANSVERSE REINFORCING STEEL TO BE LEFT IN PLACE. SAND BLAST CLEAN AND REMOVE ALL CORROSION PRIOR TO CONCRETE PLACEMENT.
4. REPLACE REINFORCEMENT BARS BROKEN OR CRACKED DURING DEMOLITION AS SHOWN IN RETROFIT DETAIL. BARS TO BE PAID FOR UNDER THE ITEM "PREPARE EXISTING BRIDGE FOR WIDENING".
5. SEE PARAPET DETAIL SHEET FOR PARAPET LOCATIONS AND DETAILS.
6. SEE DECK SECTION ON DECK DETAIL SHEET FOR LONGITUDINAL BAR LOCATION S1, S2, S3, S4, S5, S6 S7.
7. SEE APPROACH SLAB SHEET FOR APPROACH SLAB REINFORCEMENT AND S46 BARS.
8. BAR SPACINGS SHOWN ARE MAXIMUM SPACINGS. MAKE ADJUSTMENTS TO FIT IN CORRECT NUMBER OF BARS.
9. S43 BARS TO MATCH P2 PARAPET BAR SPACING. S44 BARS TO MATCH P1 PARAPET BAR SPACING. SEE PARAPET DETAIL SHEET.
10. CUT S11, S2, S30 AND S35 BARS TO ACCOMMODATE DECK DRAIN.
11. STAY-IN-PLACE DECK FORMS ARE NOT PERMITTED.

| NO. | DATE | BY | REMARKS |
|---|---|---|---|
| | | | |

REVISIONS

UTAH DEPARTMENT OF TRANSPORTATION
SALT LAKE CITY, UTAH
STRUCTURES DIVISION

Baker

DESIGN JPD 11/04 CHECK MSA 12/04
DRAWN GCK 11/04 CHECK MSA 12/04
QUANT. JPD 01/05 CHECK GCK 01/05

APPROVAL RECOMM. DATE DESIGN ENGR.
APPROVED FOR USE BY UDOT DATE UDOT BRIDGE ENGR.

I-15: UTAH COUNTY
U.P.R.R. & US-89 OVERPASS
DECK PLAN

PROJECT NUMBER SP-15-6(52)241

UTAH
COUNTY

C-343W2
DRG. NO.

SHT. 21 OF 35

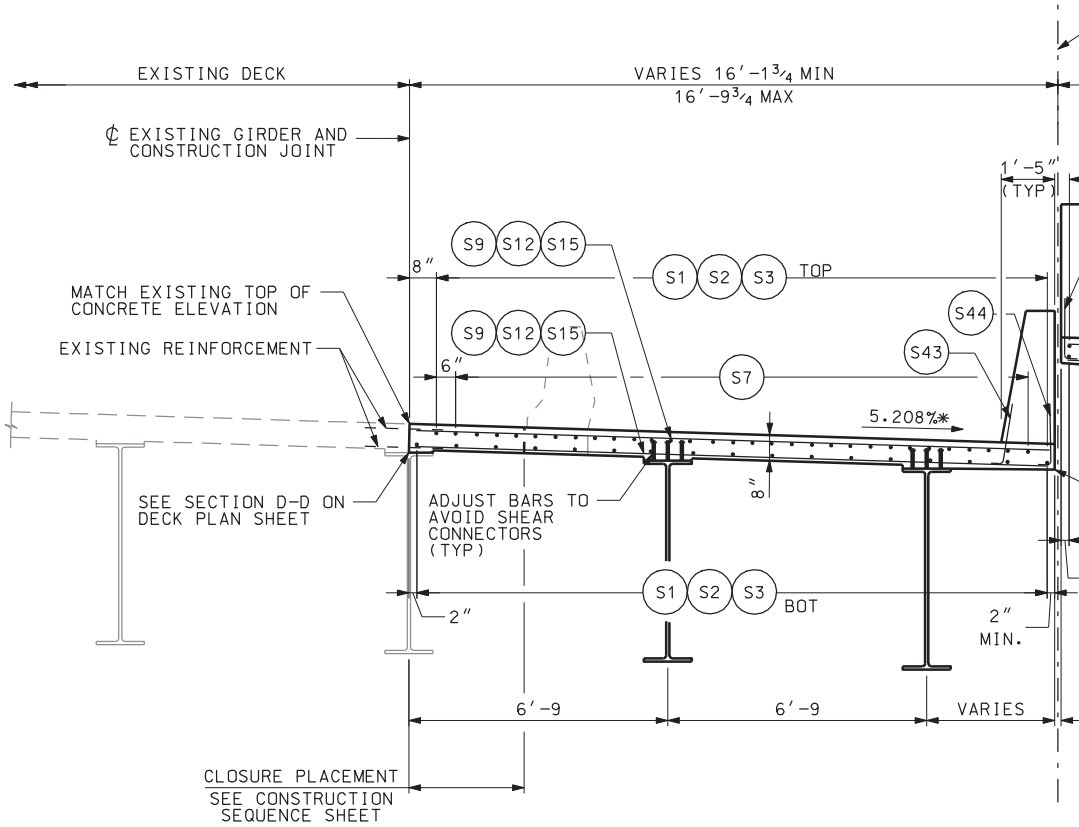


NORTHBOUND

TYPICAL CROS

* MATCH EXISTING

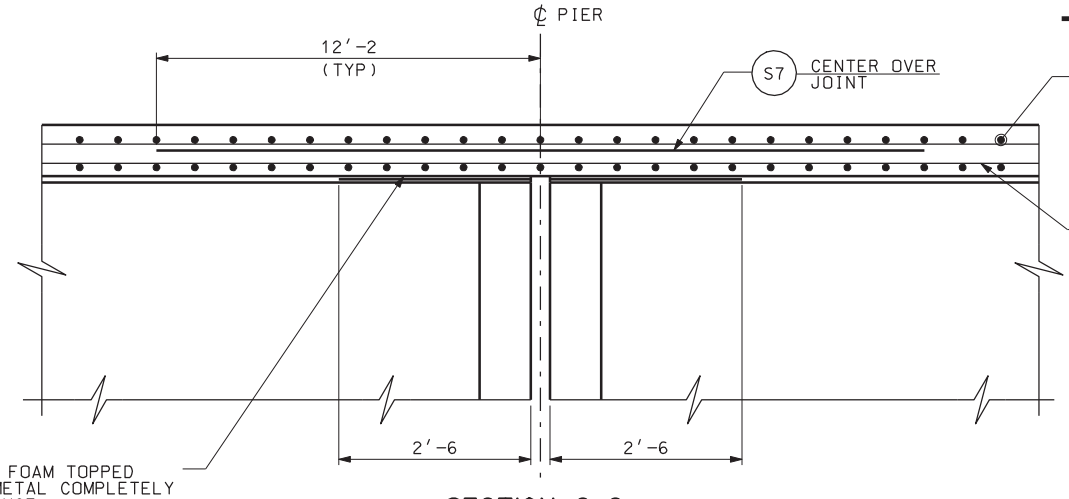


SECTION C-C

PIERS #3 & #5
SEE NOTE 1

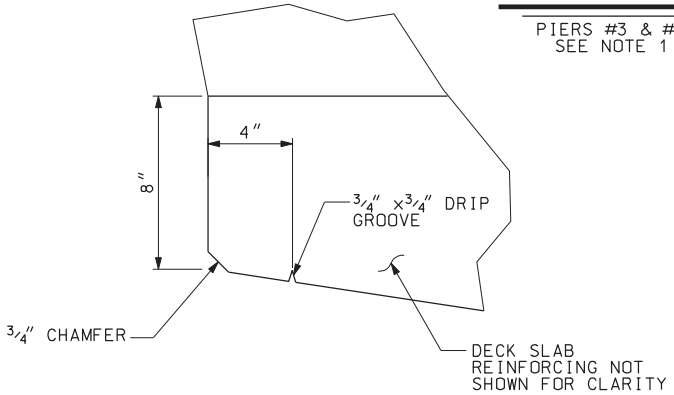


DETAIL 1

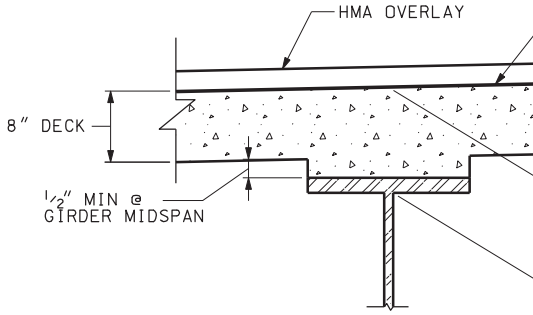


DETAIL 2

DGN File:IP_PWPcdms1717\4433_C343-22_DeckDt101.dgn

02-MAY-2005

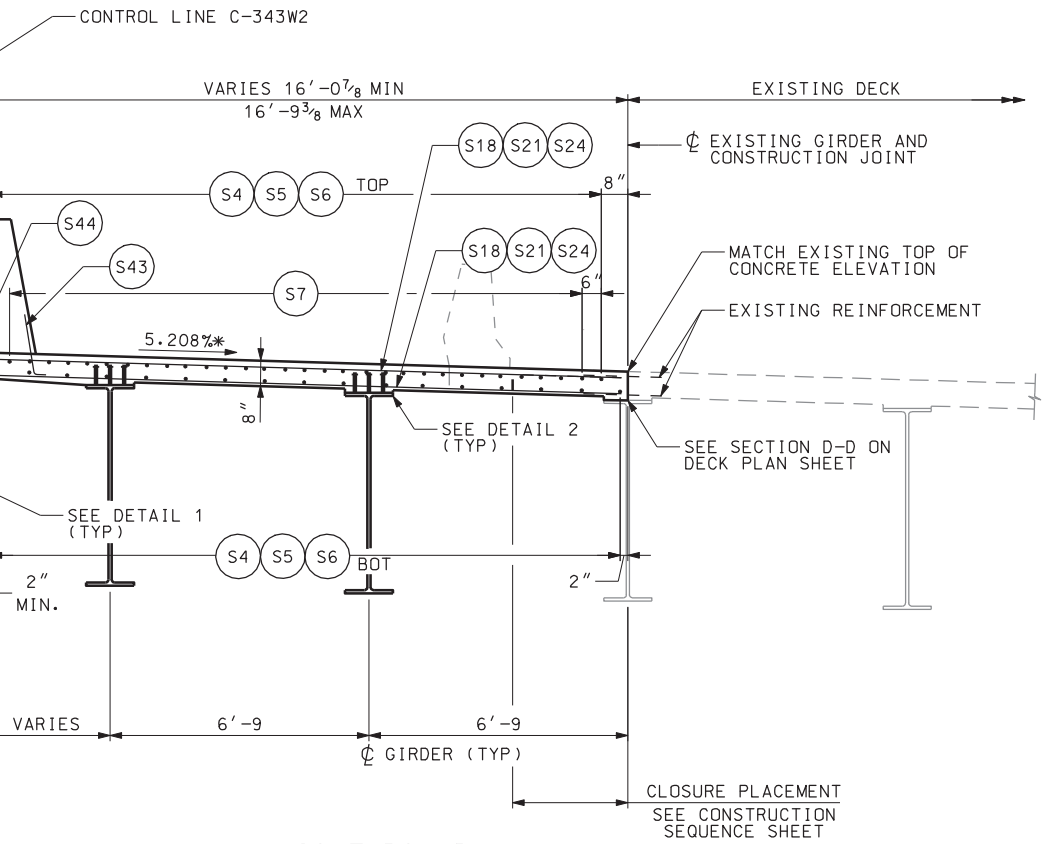


SOUTHBOUND

SS SECTION

CROSS SLOPE

ARS

AL BARS

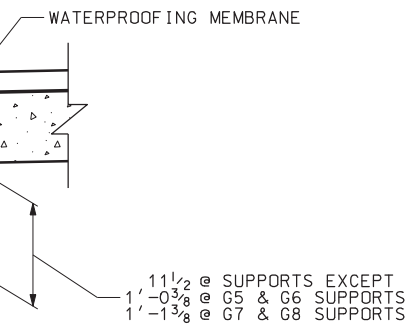


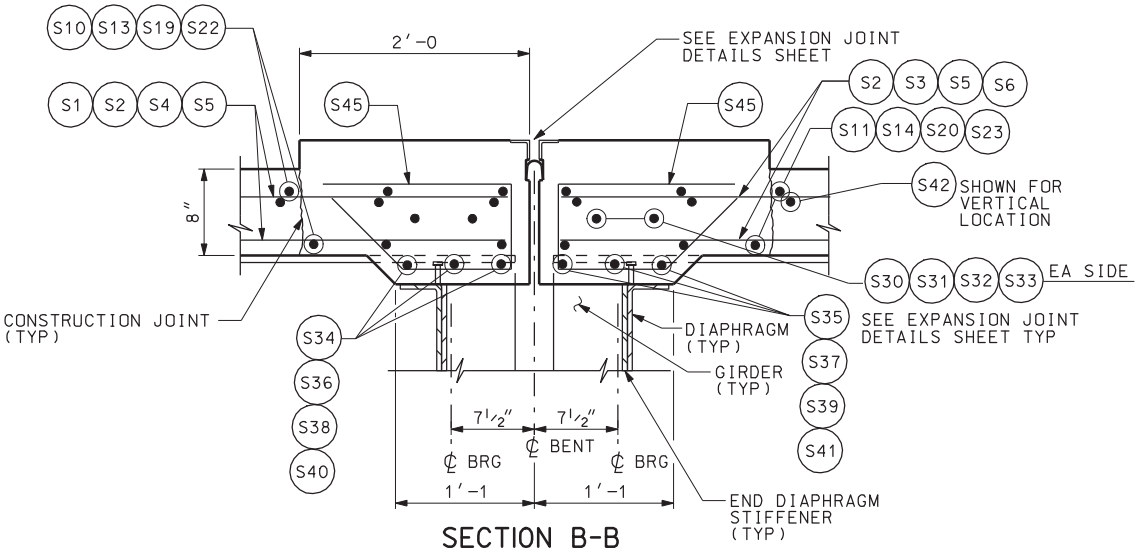


SECTION B-B

PIERS #2 AND #4
SEE NOTE 1

## NOTES

1. SEE DECK PLAN SHEET FOR LOCATIONS.
2. SEE CONSTRUCTION SEQUENCE SHEET FOR CONCRETE PLACEMENT DIAGRAM.

| NO. | DATE | BY | REMARKS |
|---|---|---|---|

REVISIONS

UTAH DEPARTMENT OF TRANSPORTATION
SALT LAKE CITY, UTAH
STRUCTURES DIVISION

Baker

DESIGN JPD 12/04 CHECK AW 12/04
DRAWN GCK 12/04 CHECK MSA 12/04
QUANT. CHECK

APPROVAL RECOMM. DATE DESIGN ENGR.
APPROVED FOR USE BY UDOT DATE UDOT BRIDGE ENGR.

I-15: UTAH COUNTY
U.P.R.R. & US-89 OVERPASS
DECK DETAILS

PROJECT NUMBER SP-15-6(52)241

UTAH
COUNTY

C-343W2
DRG. NO.

SHT. 22 OF 35

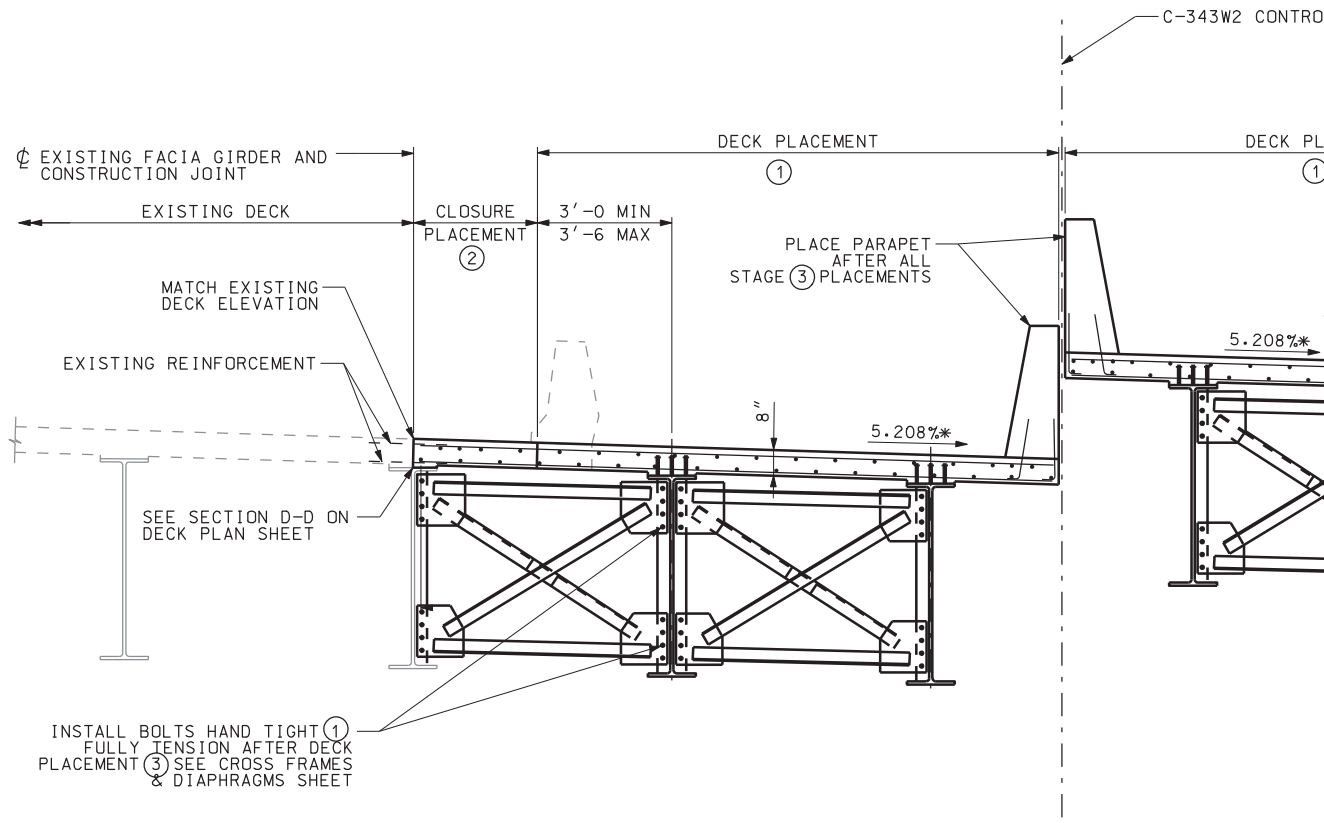


NORTHBOUND

## TYPICAL CROSS SECTION

* MATCH EXISTING CROSS SLOPE

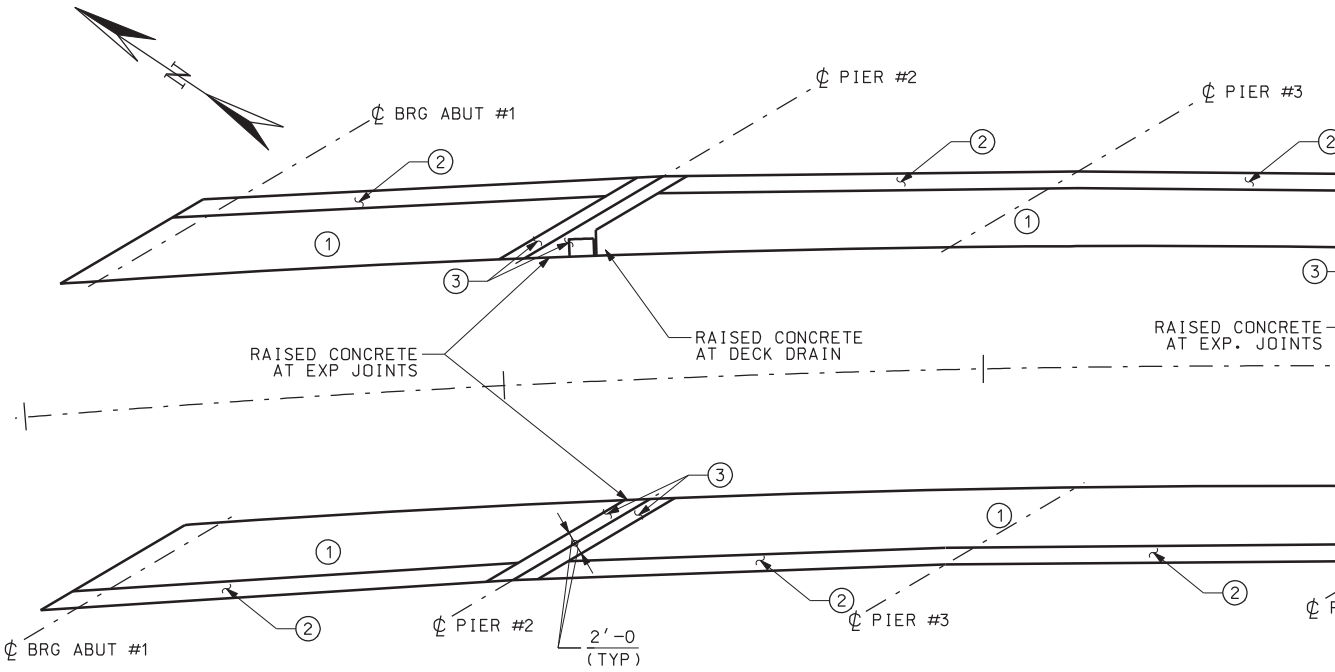


## DECK PLACEMENT SEQU

(PLAN VIEW)

DGN File: IP_PWPcdns1717\4433_C343-23_DeckConSeq01.dgn

02-MAY-2005

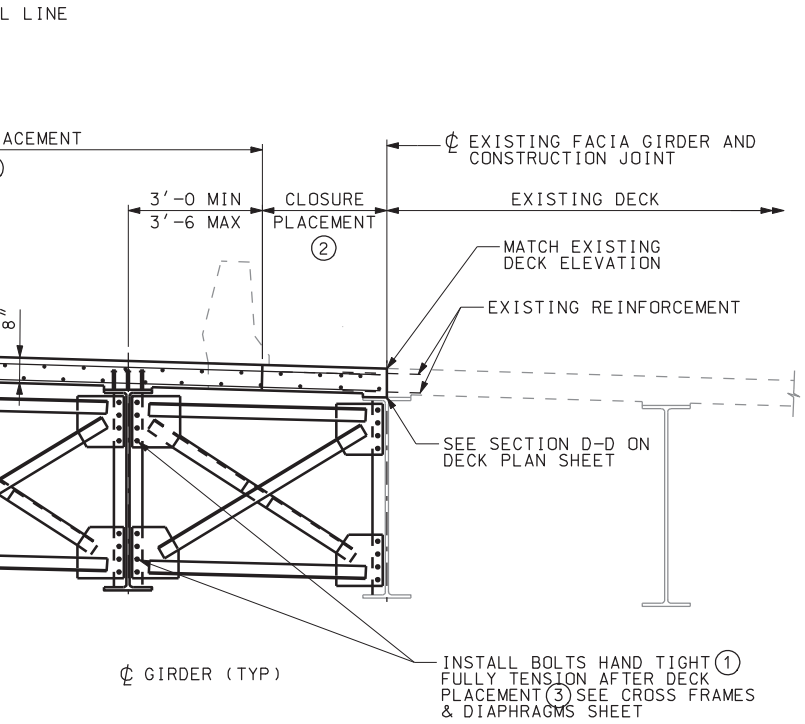


## SOUTHBOUND

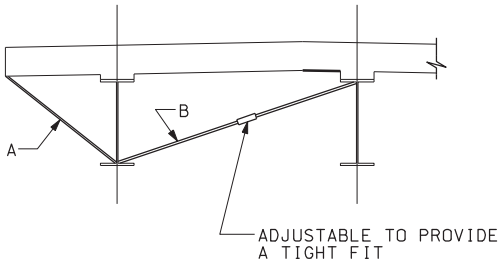


BRACE DECK OVERHANGS DURING PLACEMENT OF DECK AS SHOWN. INSURE THAT MEMBER "B" IS CAPABLE OF DEVELOPING THE FORCES INDUCED BY MEMBER "A". SHOP DRAWINGS ARE REQUIRED.

## SECTION AT SLAB OVERHANG

(BRACING DETAIL)

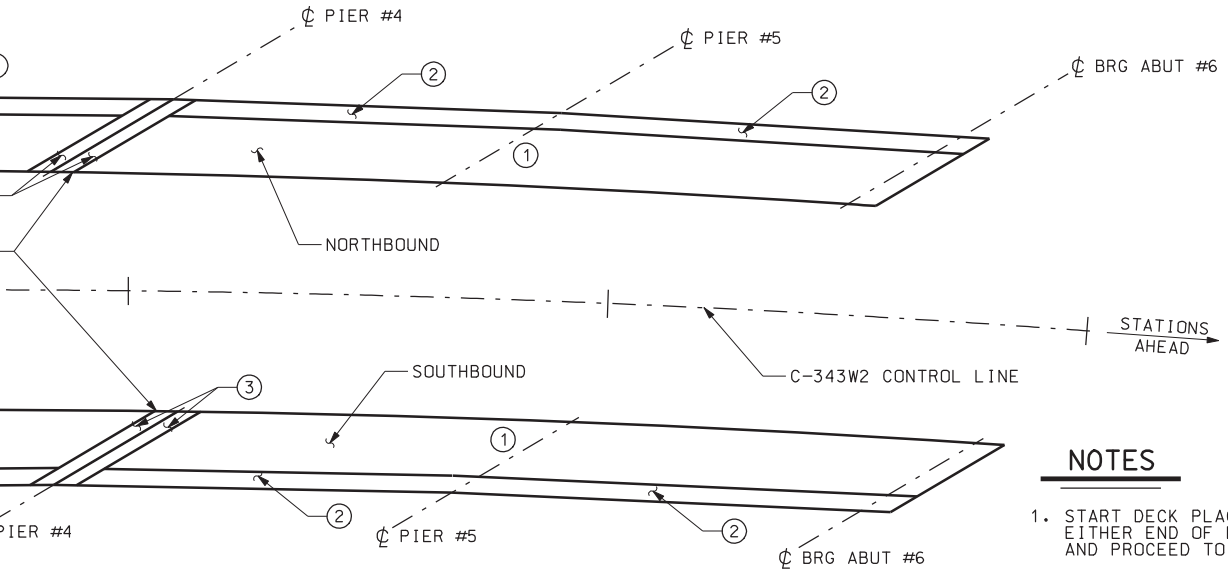


## NOTES

1. START DECK PLACEMENT AT EITHER END OF DECK JOINT AND PROCEED TO NEXT JOINT.
2. SEE DECK DRAIN SHEET AND EXPANSION JOINT DETAIL SHEET FOR RAISED DECK CONCRETE.
3. DECK PLACEMENT IS IN ORDER INDICATED BY NUMBERS ENCLOSED IN CIRCLES.

UENCE

| NO. | DATE | BY | REMARKS |
|---|---|---|---|

REVISIONS

Baker

UTAH DEPARTMENT OF TRANSPORTATION
SALT LAKE CITY, UTAH
STRUCTURES DIVISION

DESIGN JPD 12/04 CHECK AW 12/04
DRAWN GCK 12/04 CHECK MSA 12/04
QUANT. CHECK

APPROVAL RECOMM. DATE DESIGN ENGR.
APPROVED FOR USE BY UDOT DATE UDOT BRIDGE ENGR.

I-15: UTAH COUNTY
U.P.R.R. & US-89 OVERPASS
DECK CONSTRUCTION SEQUENCE

PROJECT NUMBER SP-15-6(52)241

UTAH
COUNTY

C-343W2
DRG. NO.

SHT. 23 OF 35

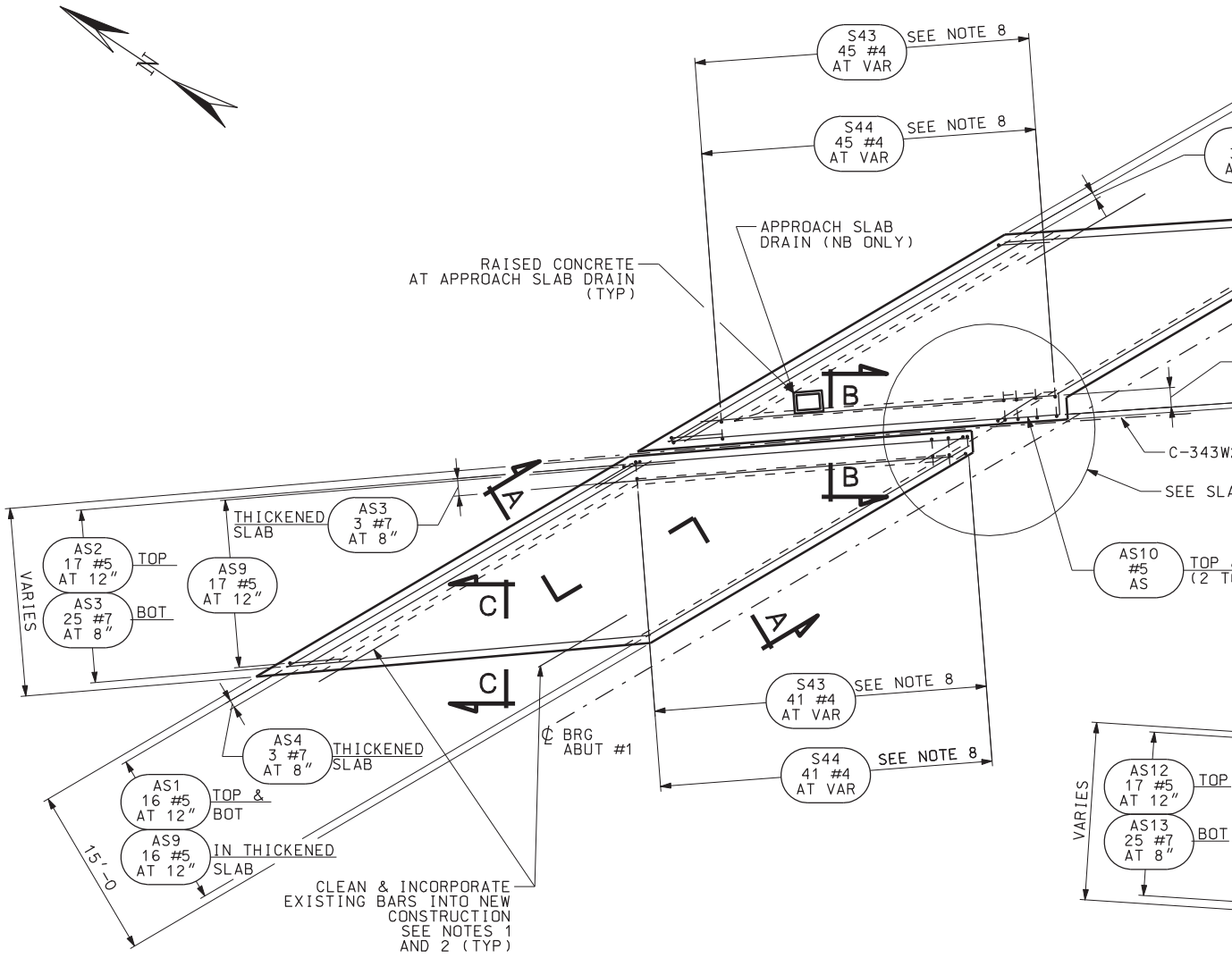


## APPROACH SLAB PLAN

ABUTMENT #1

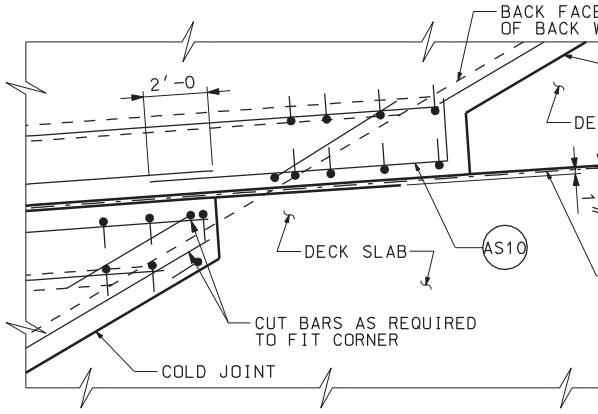


## SLAB CORNER DETAIL

DGN File: IP_PWPcdms1717\4433_C343-24_ApprchSlb.dgn

02-MAY-2005

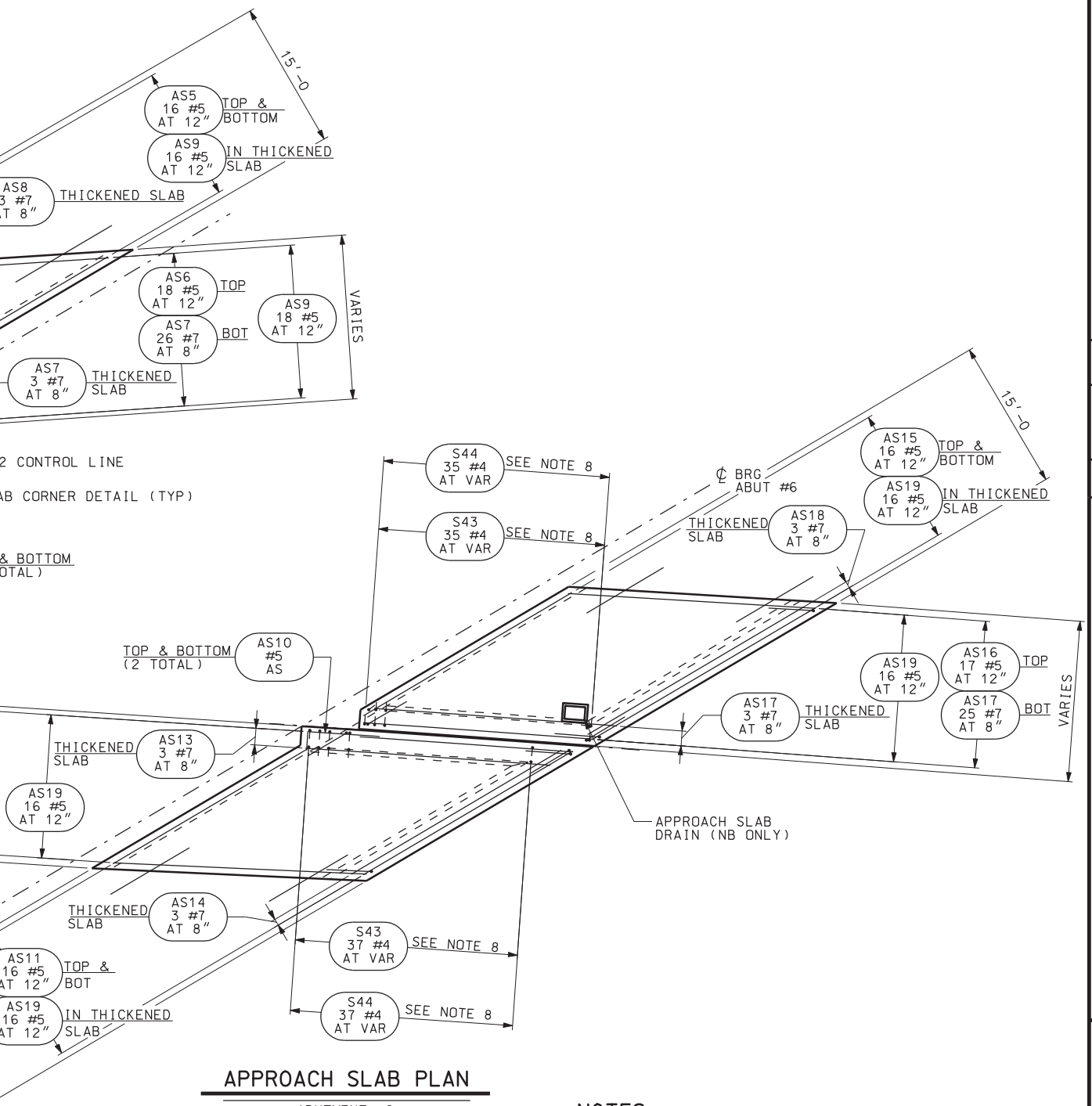


## APPROACH SLAB PLAN

ABUTMENT #6

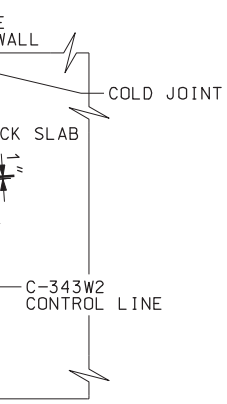


| QUANTITIES STRUCTURAL CONCRETE | |
|---|---|
| APPROACH SLAB | 48.0 CY |

## NOTES

1. EXISTING APPROACH SLAB TRANSVERSE REINFORCING STEEL TO BE LEFT IN PLACE. SAND BLAST CLEAN AND REMOVE ALL CORROSION PRIOR TO CONCRETE PLACEMENT.
2. REPLACE REINFORCEMENT BARS BROKEN OR CRACKED DURING DEMOLITION AS SHOWN IN RETROFIT DETAIL ON DECK PLAN SHEET. BARS TO BE PAID FOR UNDER THE ITEM "PREPARE EXISTING BRIDGE FOR WIDENING."
3. SEE PARAPET DETAILS SHEET FOR PARAPET LOCATIONS AND DETAILS.
4. SEE APPROACH SLAB DRAIN DETAILS SHEET FOR APPROACH SLAB DRAIN LOCATION AND DETAILS.
5. SEE APPROACH SLAB DETAILS SHEET FOR CROSS-SECTIONS AND COLD JOINT DETAILS.
6. BAR SPACINGS SHOWN ARE MAXIMUM SPACINGS. MAKE ADJUSTMENTS TO FIT IN CORRECT NUMBER OF BARS.
7. CUT AND ADJUST REINFORCEMENT AT APPROACH SLAB DRAINS.
8. S43 BARS TO MATCH P2 PARAPET BAR SPACING. S44 BARS TO MATCH P1 PARAPET BAR SPACING. SEE PARAPET DETAIL SHEET.
9. REINFORCING SPACING SHOWN IS ORTHOGONAL TO BARS.

| NO. | DATE | BY | REMARKS |
|---|---|---|---|
| | | | |

REVISIONS

Baker

UTAH DEPARTMENT OF TRANSPORTATION
SALT LAKE CITY, UTAH
STRUCTURES DIVISION

DESIGN MSA 12/04 CHECK AW 12/04
DRAWN GCK 12/04 CHECK JPD 12/04
QUANT. JPD 01/05 CHECK MSA 01/05

APPROVAL RECOMM. DATE DESIGN ENGR.
APPROVED FOR USE BY UDOT DATE UDOT BRIDGE ENGR.

I-15: UTAH COUNTY
U.P.R.R. & US-89 OVERPASS
APPROACH SLAB PLAN

PROJECT NUMBER SP-15-6(52)241

UTAH
COUNTY

C-343W2
DRG. NO.

SHT. 24 OF 35

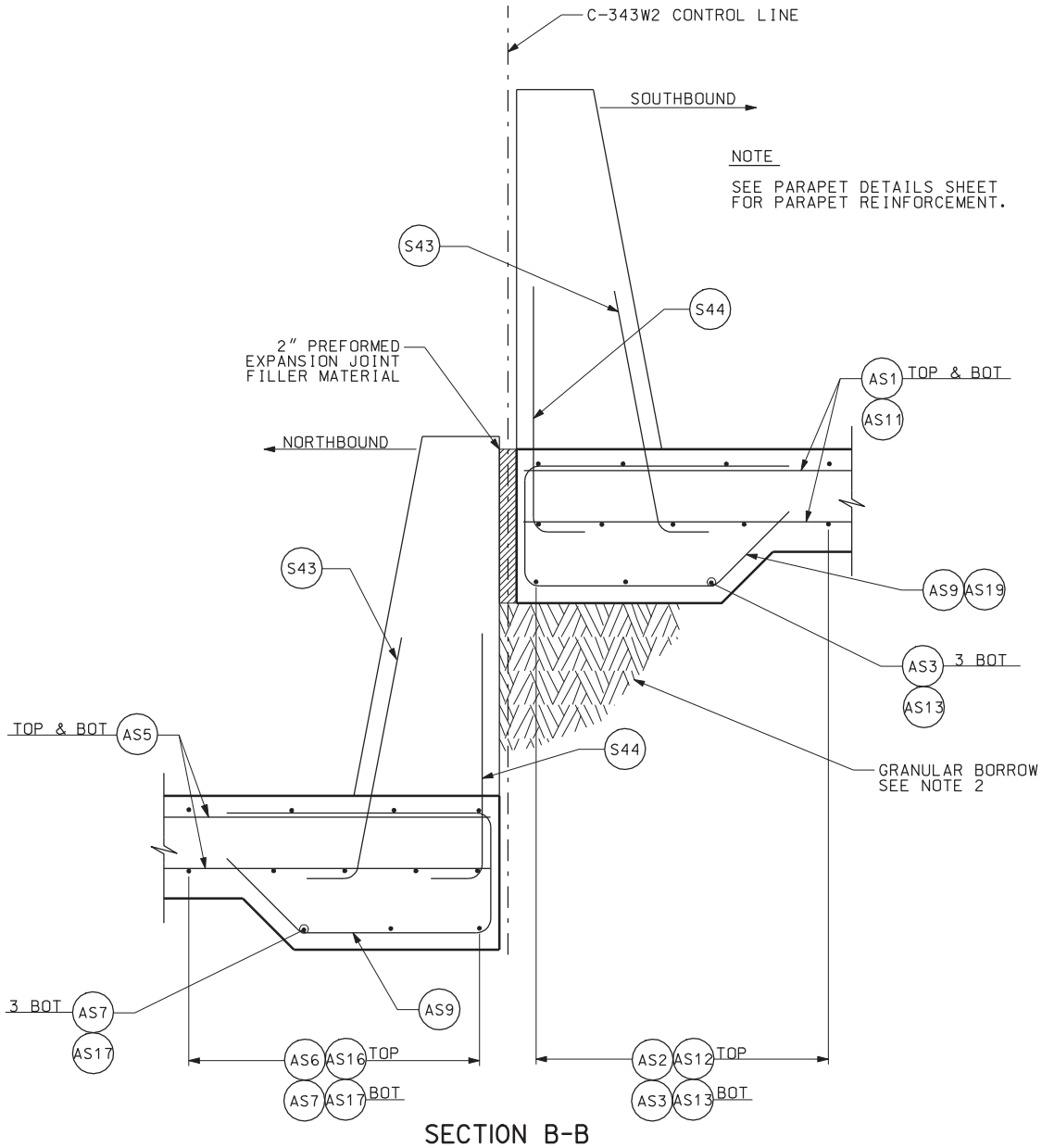


## SECTION B-B

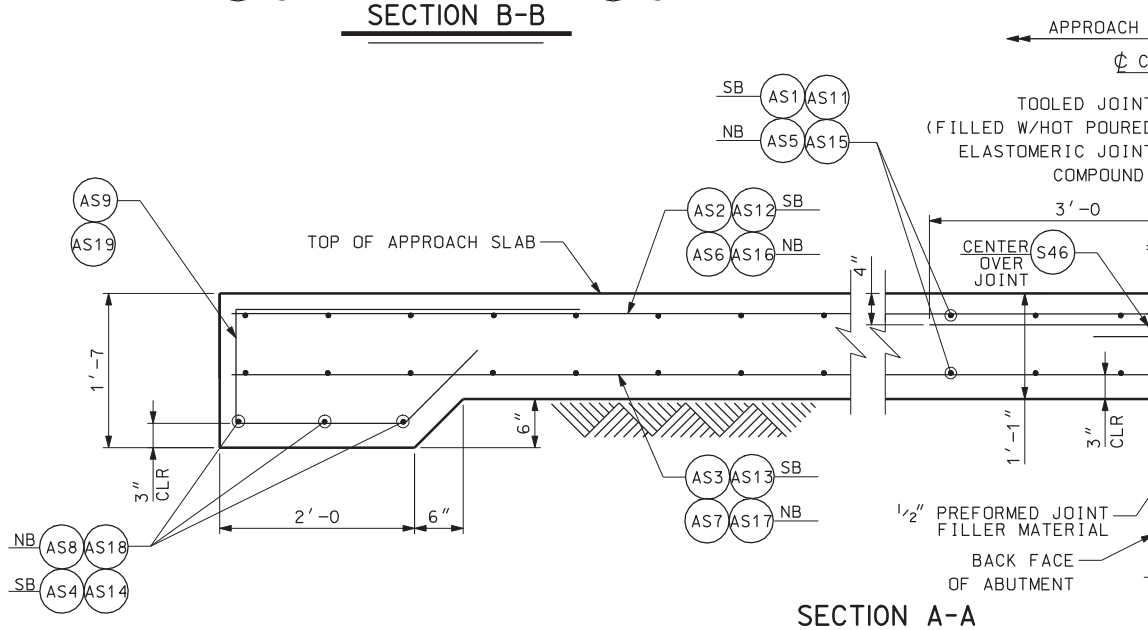


## SECTION A-A

DGN File: IP_PWPcdms1717\4433_C343-25_ApprchSlbDtl.dgn

02-MAY-2005

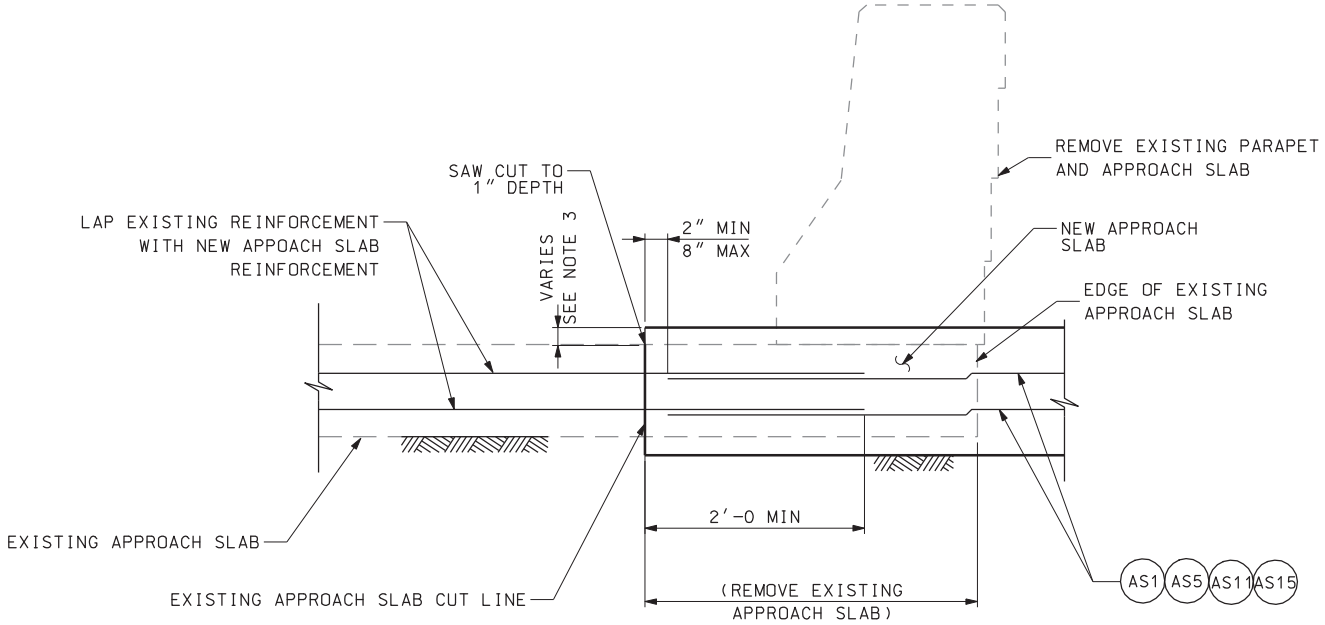


## SECTION C-C

(SEE NOTE 3)

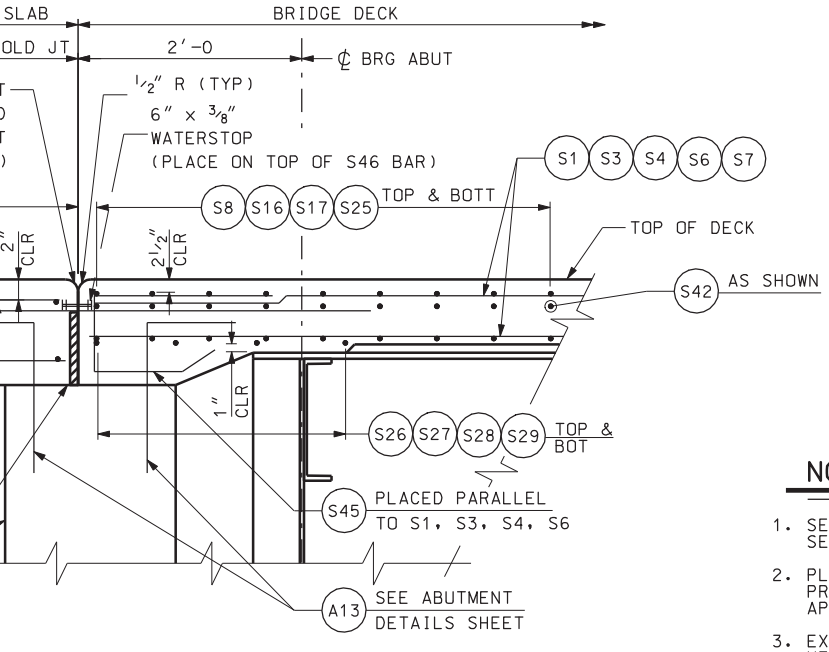


## NOTES

1. SEE APPROACH SLAB PLAN SHEET FOR LOCATION OF SECTIONS A-A, B-B AND C-C.
2. PLACE NORTHBOUND APPROACH SLAB AND PARAPET PRIOR TO BACK FILLING AND PLACING SOUTHBOUND APPROACH SLAB AND PARAPET.
3. EXISTING APPROACH SLAB MAY HAVE SETTLED. PLACE NEW APPROACH SLAB TO ELEVATION SHOWN ON APPROACH SLAB PLAN SHEET.

| NO. | DATE | BY | REMARKS |
|---|---|---|---|
| | | | |

REVISIONS

Baker

UTAH DEPARTMENT OF TRANSPORTATION
SALT LAKE CITY, UTAH
STRUCTURES DIVISION

DESIGN MSA 12/04 CHECK AW 12/04
DRAWN GCK 12/04 CHECK JPD 12/04
QUANT. CHECK

APPROVAL RECOMM. DATE DESIGN ENGR.
APPROVED FOR USE BY UDOT DATE UDOT BRIDGE ENGR.

I-15: UTAH COUNTY
U.P.R.R. & US-89 OVERPASS
APPROACH SLAB DETAILS

PROJECT NUMBER SP-15-6(52)241

UTAH
COUNTY

C-343W2
DRG. NO.

SHT. 25 OF 35

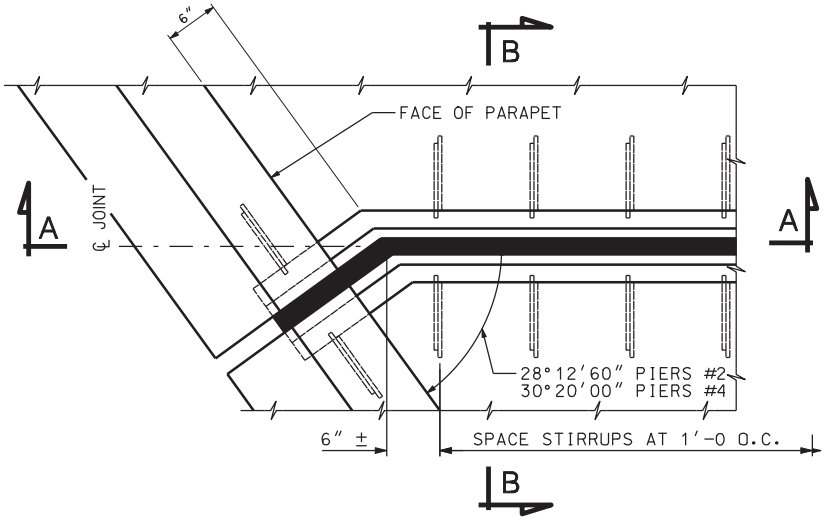


PLAN VIEW OF EXPANSION JOINT

(NORTHBOUND SHOWN, SOUTHBOUND SIMILAR)

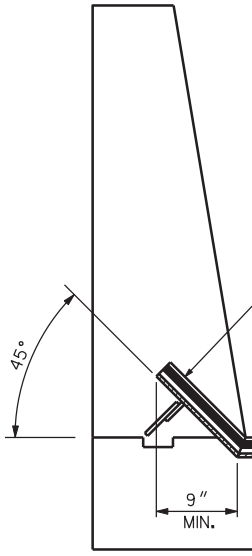


SECTION

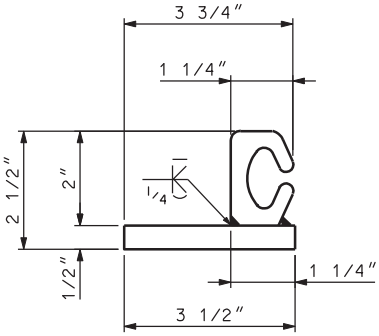


D.S. BROWN STRIP SEAL SYSTEM
(USE A2 SERIES SEAL ELEMENT)

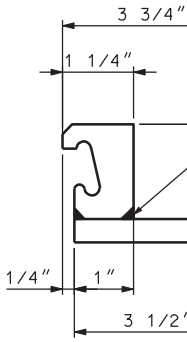


WABO STRIP S
(USE SE SERIES

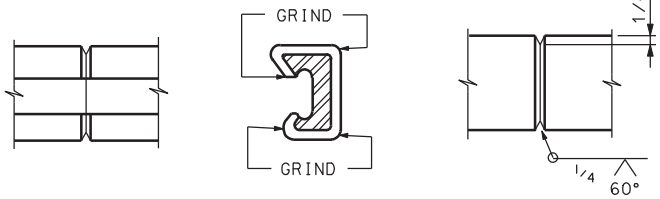


LEFT ELEVATION TYPICAL SECTION RIGHT ELEVATION

STEEL EXTRUSION SPLICE DETAIL

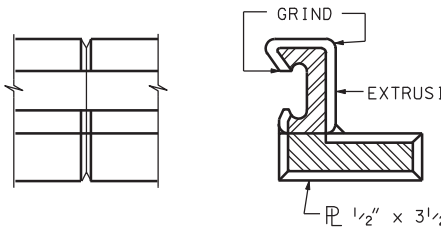


LEFT ELEVATION TYPICAL SECTION

SPLICE STEEL EXTRUSION RAILS, SPLI
THEN WELD RAIL TO PLATE.

STEEL EXTRUSION
PLATE SPLICE

DGN File: IP_PWPcdns1717\4433_C343-26_ExpJt.dgn

02-MAY-2005

| LOCATION | RATED CAPACITY | JOINT WIDTH (IN.) | | | | | | |
|---|---|---|---|---|---|---|---|---|
| | | 30°F | 40°F | 50°F | 60°F | 70°F | 80°F | 90°F |
| PIERS #2 | 4" MIN. | 1 3/4" | 1 11/16" | 1 5/8" | 1 9/16" | 1 1/2" | 1 7/16" | 1 3/8" |
| PIERS #4 | 4" MIN. | 1 3/4" | 1 11/16" | 1 5/8" | 1 9/16" | 1 1/2" | 1 7/16" | 1 3/8" |

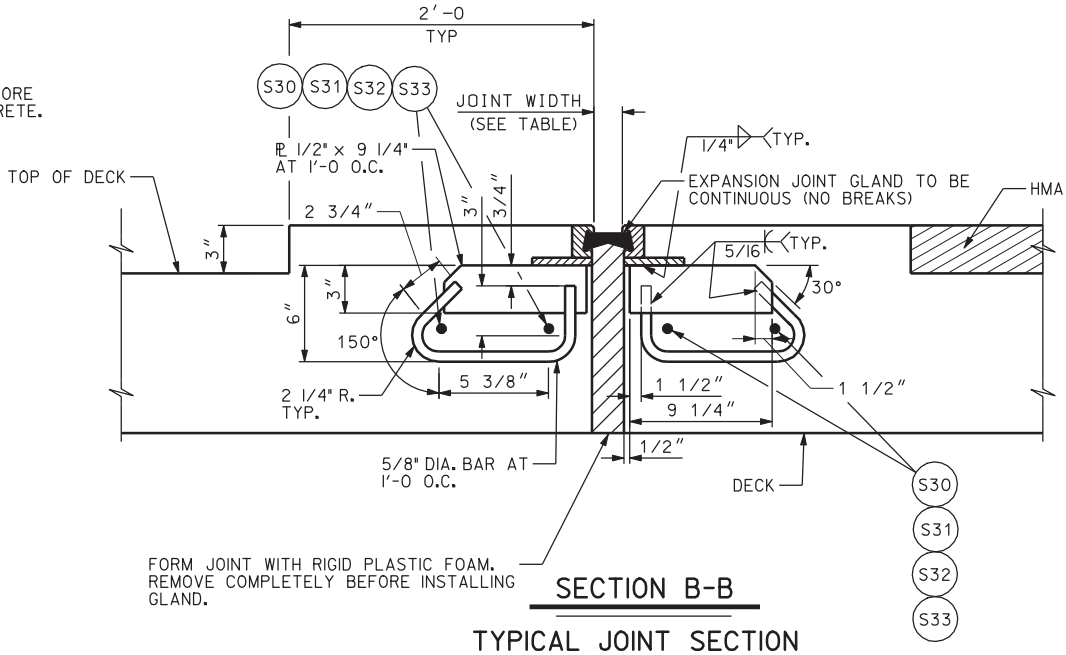


## SECTION B-B

## TYPICAL JOINT SECTION

* DIMENSION DOES NOT APPLY TO D.S. BROWN EXTRUSION

PLACE JOINT GLAND BEFORE
PLACING PARAPET CONCRETE.

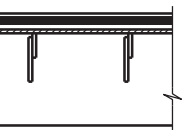

N A-A

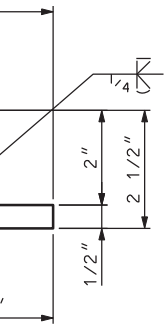


SEAL SYSTEM
SEAL ELEMENT)

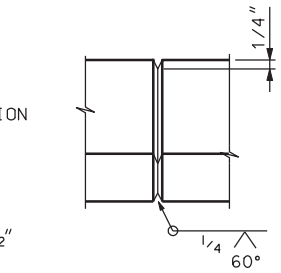


RIGHT ELEVATION

CE 1/2" x 3 1/2" PLATES,

RAIL AND

DETAIL

## NOTES

1. PROVIDE NEW EXTRUSION TO MATCH THE EXISTING EXPANSION JOINT EXTRUSION.
2. PLACE EXPANSION JOINT GLAND PRIOR TO PLACING PARAPET CONCRETE. REPLACE EXISTING GLAND WITH NEW FULL LENGTH GLAND.
3. HOT-DIP GALVANIZE OR EPOXY COAT THE COMPLETE EXPANSION SYSTEM AFTER FABRICATION IN ACCORDANCE WITH AASHTO M 111 OR AASHTO M 284M, RESPECTIVELY. NO WARPING IS ACCEPTABLE IN THE PROCESS OF COATING BY EITHER METHOD.
4. EXTEND EXTRUSION INTO PARAPET 1" BEFORE EACH UPTURN.
5. SEE PARAPET DETAILS SHEET AND DECK SLAB PLAN SHEET FOR REINFORCING STEEL IN PARAPETS AND DECK.

| QUANTITIES | |
|---|---|
| EXPANSION JOINT | 131 LIN. FT. |

| NO. | DATE | BY | REMARKS |
|---|---|---|---|

REVISIONS

Baker

UTAH DEPARTMENT OF TRANSPORTATION
SALT LAKE CITY, UTAH
STRUCTURES DIVISION

DESIGN JPD 12/04 CHECK AW 12/04
DRAWN GCK 12/04 CHECK MSA 12/04
QUANT. JPD 01/05 CHECK AW 01/05

APPROVAL RECOMM. DATE DESIGN ENGR.
APPROVED FOR USE BY UDOT DATE UDOT BRIDGE ENGR.

I-15: UTAH COUNTY
U.P.R.R. & US-89 OVERPASS
EXPANSION JOINT DETAILS

PROJECT NUMBER SP-15-6(52)241

UTAH
COUNTY

C-343W2
DRG. NO.

SHT. 26 OF 35

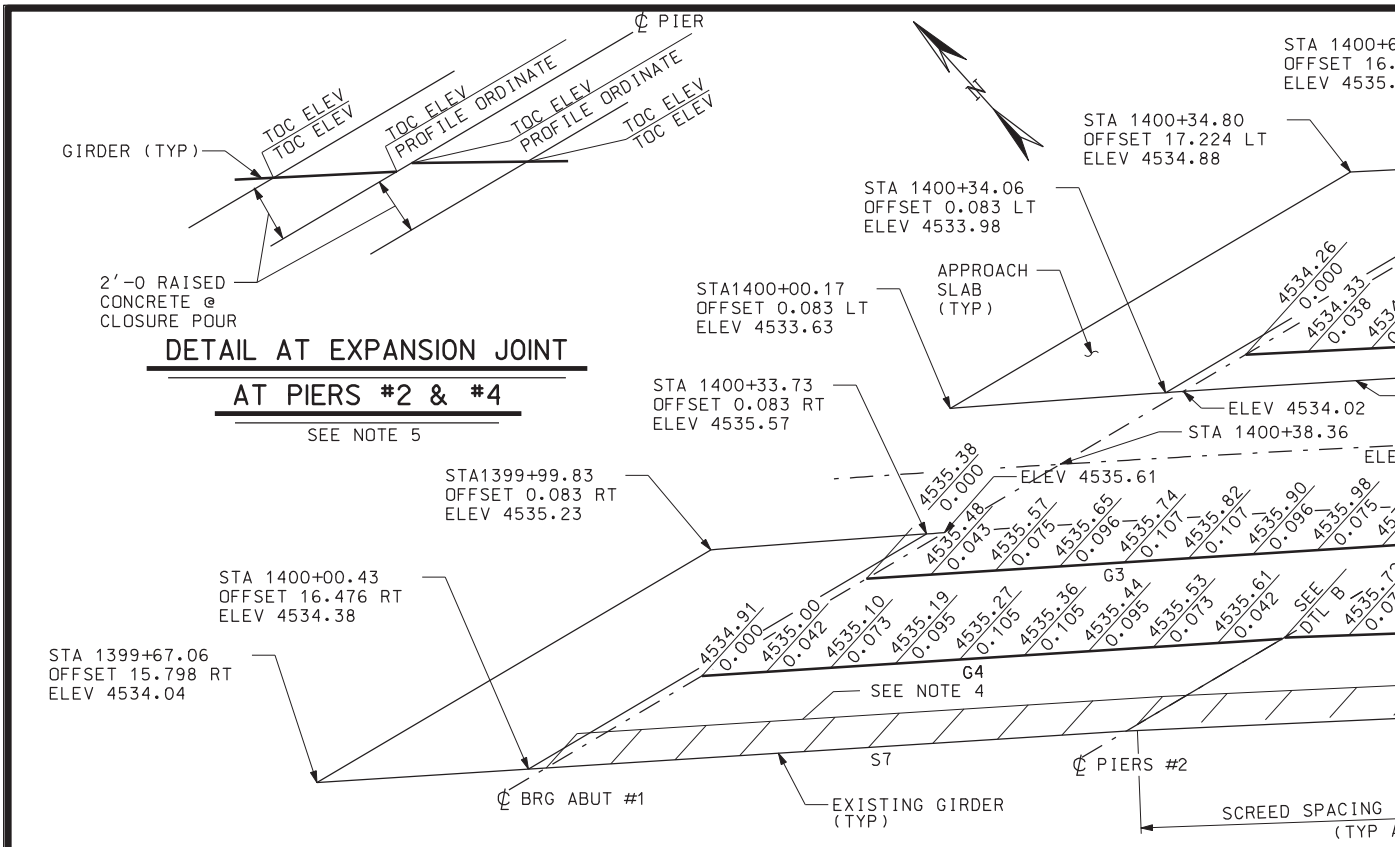


| GIRDER NO. | SCREED DATA TABLE |
|---|---|
| G1 | 9 EQ SPA @ 9' - 8 3/4 = 87' - 6 1/2 |
| G2 | 9 EQ SPA @ 9' - 8 3/4 = 87' - 6 1/2 |
| G3 | 9 EQ SPA @ 10' - 1 1/4 = 90' - 10 3/4 |
| G4 | 9 EQ SPA @ 10' - 1 1/4 = 90' - 10 3/4 |
| G5 | 9 EQ SPA @ 9' - 8 1/2 = 87' - 4 |
| G6 | 9 EQ SPA @ 9' - 8 1/2 = 87' - 4 |
| G7 | 9 EQ SPA @ 10' - 0 3/8 = 90' - 3 1/4 |
| G8 | 9 EQ SPA @ 10' - 0 3/8 = 90' - 3 1/4 |
| G9 | 9 EQ SPA @ 9' - 11 5/8 = 89' - 8 3/8 |
| G10 | 9 EQ SPA @ 9' - 11 5/8 = 89' - 8 3/8 |
| G11 | 9 EQ SPA @ 10' - 3 1/8 = 92' - 4 |
| G12 | 9 EQ SPA @ 10' - 3 1/8 = 92' - 4 |
| G13 | 9 EQ SPA @ 8' - 11 7/8 = 80' - 11 |
| G14 | 9 EQ SPA @ 8' - 11 7/8 = 80' - 11 |
| G15 | 9 EQ SPA @ 9' - 2 3/4 = 83' - 0 3/8 |
| G16 | 9 EQ SPA @ 9' - 2 3/4 = 83' - 0 3/8 |
| G17 | 9 EQ SPA @ 9' - 3 1/4 = 83' - 5 3/8 |
| G18 | 9 EQ SPA @ 9' - 3 1/4 = 83' - 5 3/8 |
| G19 | 9 EQ SPA @ 9' - 5 7/8 = 85' - 4 3/4 |
| G20 | 9 EQ SPA @ 9' - 5 7/8 = 85' - 4 3/4 |

## LEGEND

TOC TOP OF CONCRETE
SPA SPACING
EQ EQUAL
DTL DETAIL

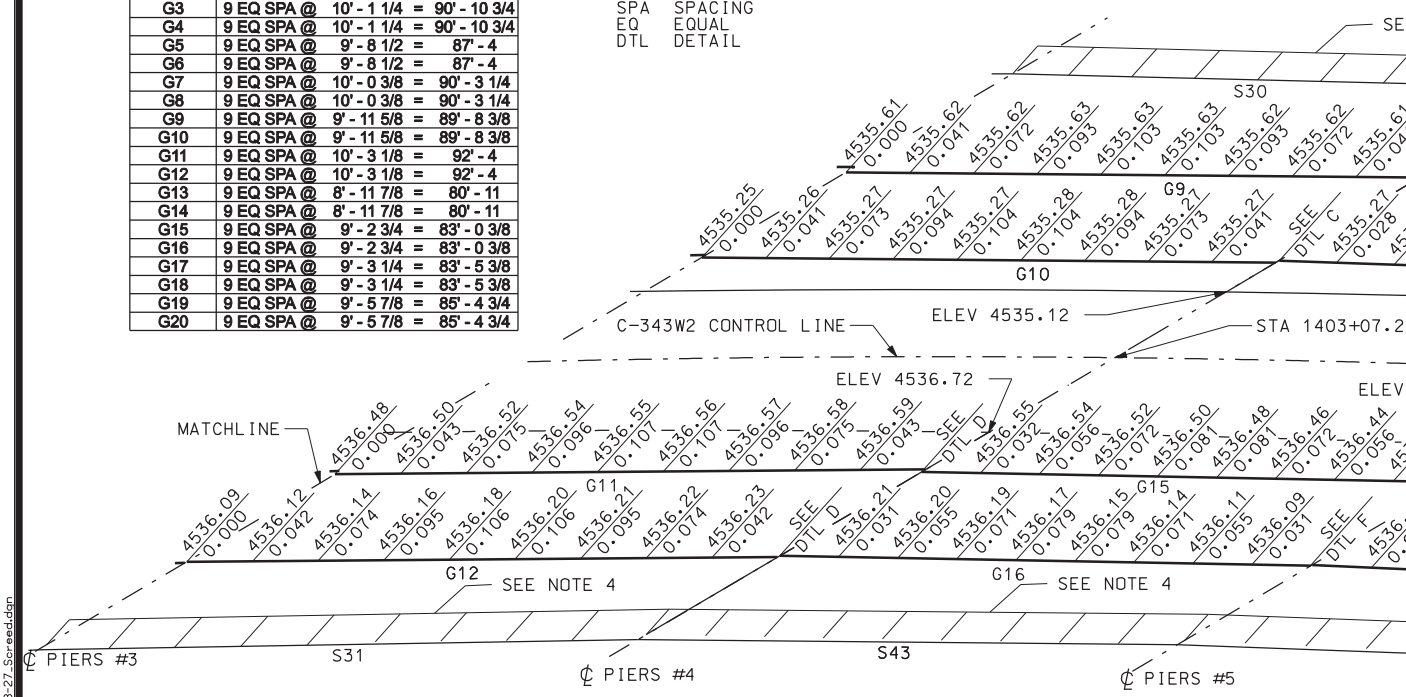


## PLAN

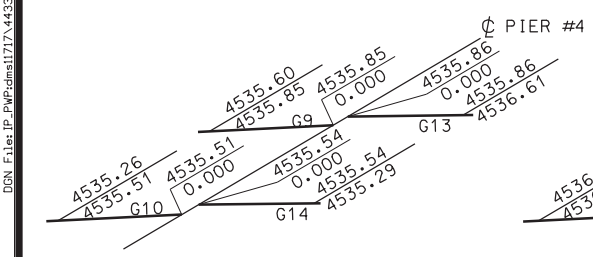


## DETAIL C

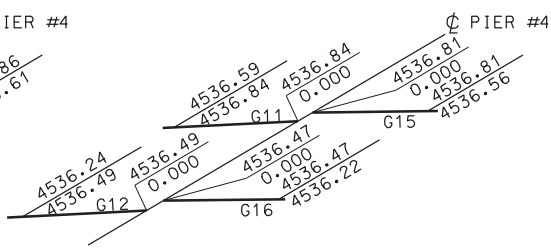


## DETAIL D

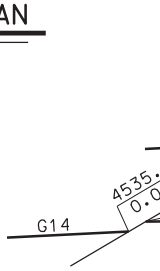


DET

DGN File: IP_PWPdns1717\4433_C343-27_Screed.dgn

02-MAY-2005

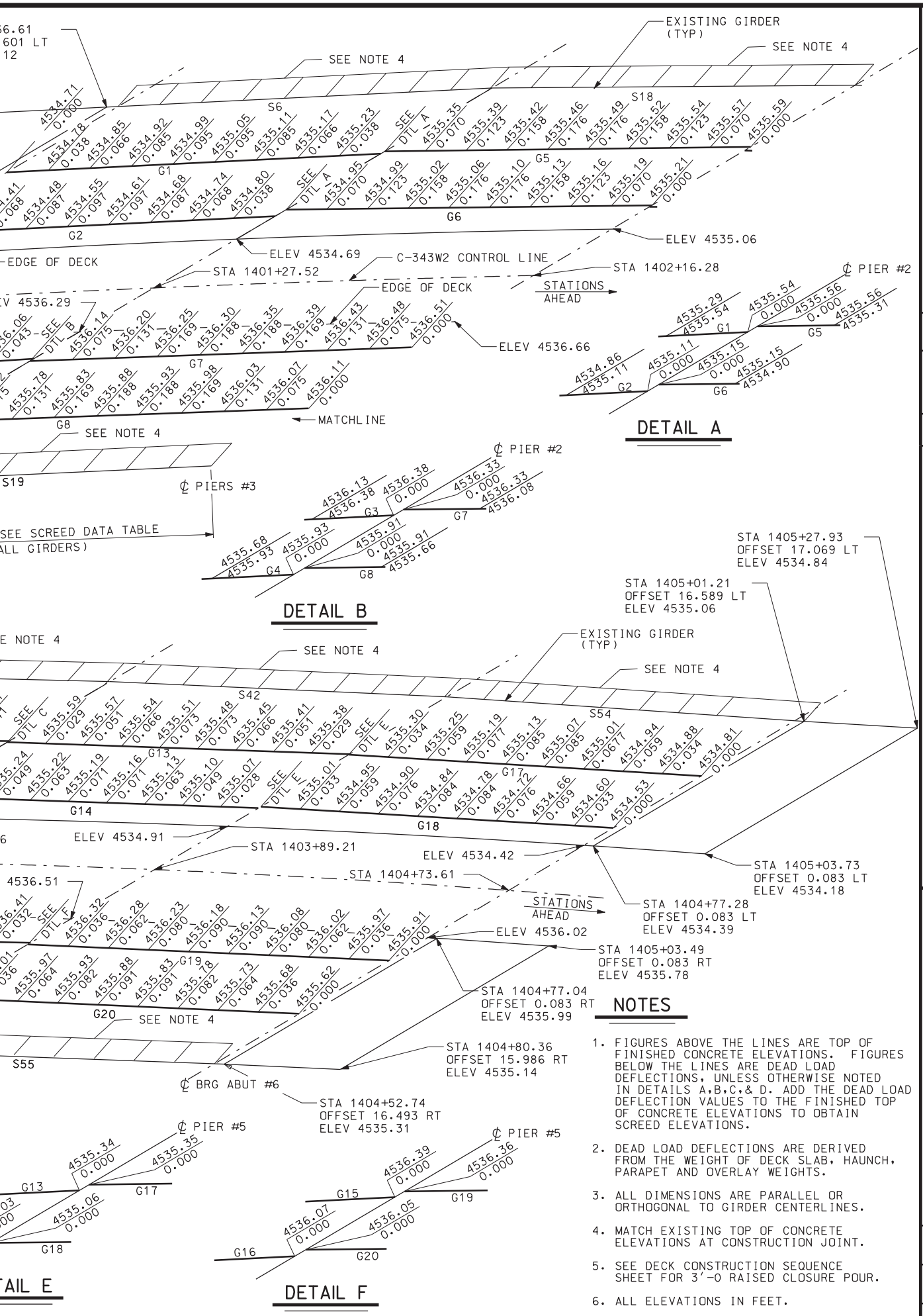


## NOTES

1. FIGURES ABOVE THE LINES ARE TOP OF FINISHED CONCRETE ELEVATIONS. FIGURES BELOW THE LINES ARE DEAD LOAD DEFLECTIONS, UNLESS OTHERWISE NOTED IN DETAILS A,B,C,& D. ADD THE DEAD LOAD DEFLECTION VALUES TO THE FINISHED TOP OF CONCRETE ELEVATIONS TO OBTAIN SCREED ELEVATIONS.
2. DEAD LOAD DEFLECTIONS ARE DERIVED FROM THE WEIGHT OF DECK SLAB, HAUNCH, PARAPET AND OVERLAY WEIGHTS.
3. ALL DIMENSIONS ARE PARALLEL OR ORTHOGONAL TO GIRDER CENTERLINES.
4. MATCH EXISTING TOP OF CONCRETE ELEVATIONS AT CONSTRUCTION JOINT.
5. SEE DECK CONSTRUCTION SEQUENCE SHEET FOR 3'-0 RAISED CLOSURE POUR.
6. ALL ELEVATIONS IN FEET.

| NO. | DATE | BY | REMARKS |
|---|---|---|---|
| | | | |

REVISIONS

Baker

UTAH DEPARTMENT OF TRANSPORTATION
SALT LAKE CITY, UTAH
STRUCTURES DIVISION

DESIGN AW 12/04 CHECK MSA 12/04
DRAWN GCK 12/14 CHECK MSA 12/04
QUANT. CHECK

APPROVAL RECOMM. DATE DESIGN ENGR.
APPROVED FOR USE BY UDOT DATE UDOT BRIDGE ENGR.

I-15: UTAH COUNTY
U.P.R.R. & US-89 OVERPASS
SCREED ELEVATIONS

PROJECT NUMBER SP-15-6(52)241

UTAH
COUNTY

C-343W2
DRG. NO.

SHT. 27 OF 35

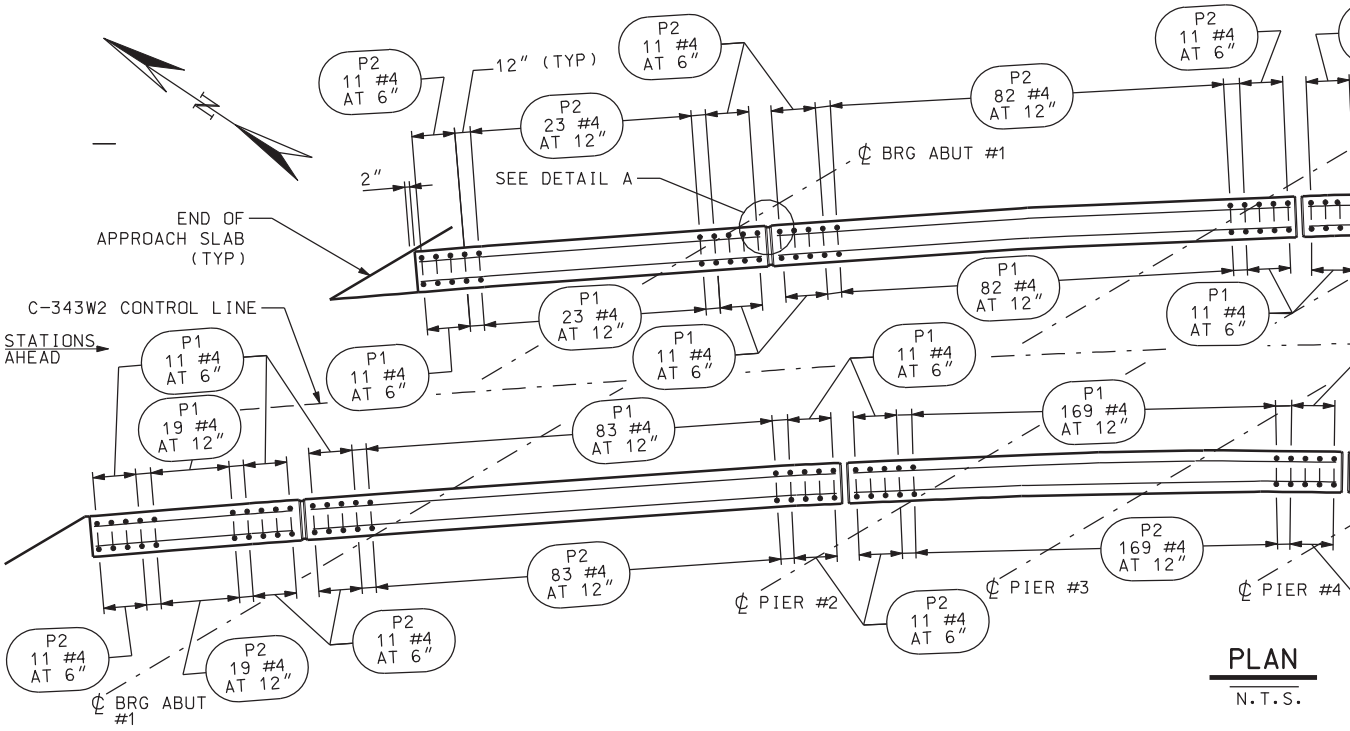


## PLAN

N.T.S.

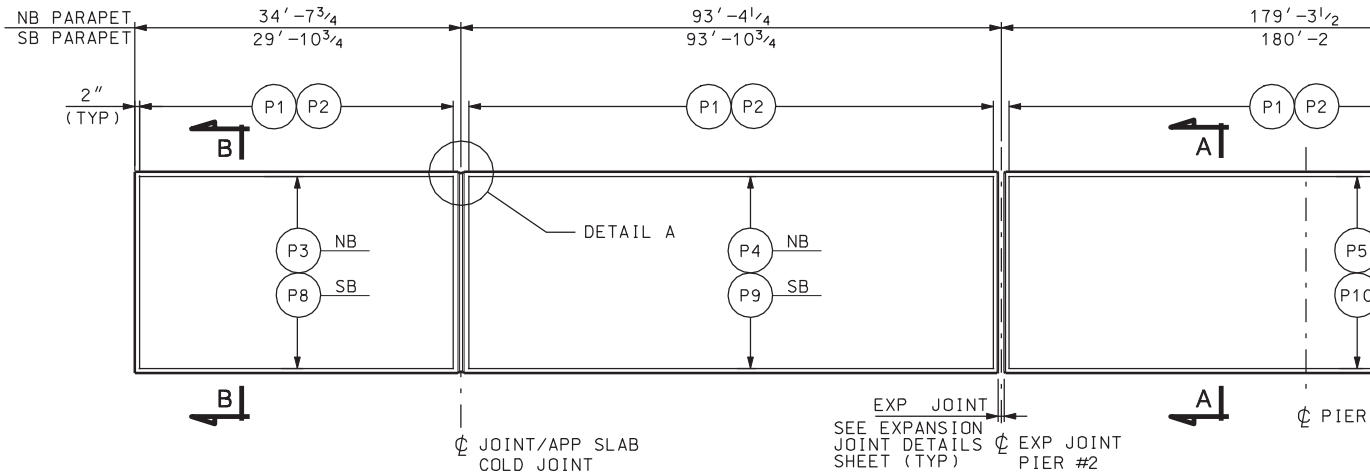


## ELEVATION

ALL DIMENSIONS SHOWN ARE ALONG
N.T.S.

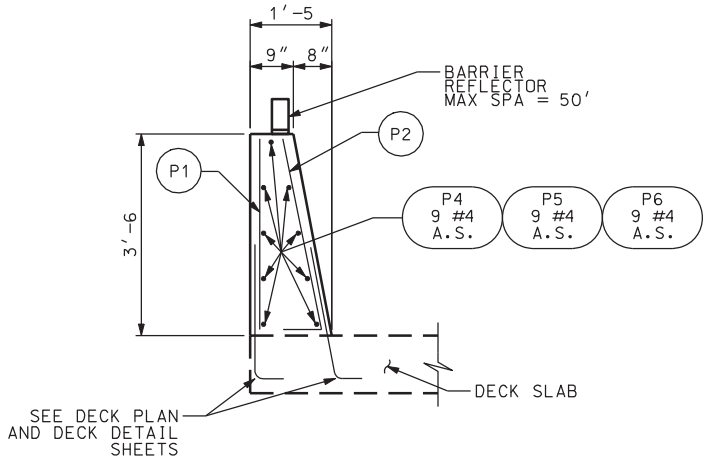


## SECTION A-A

NB PARAPET SHOWN, SB SIMILAR

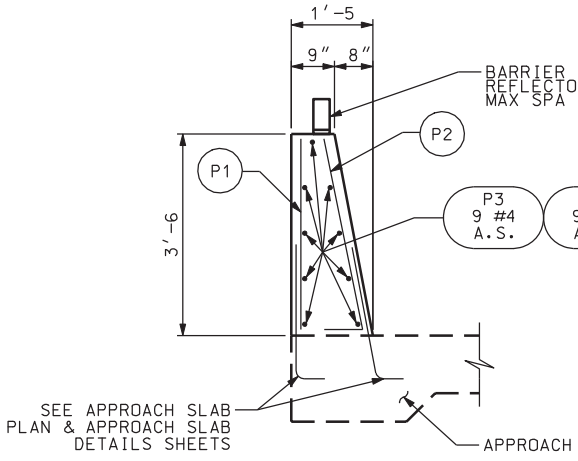


## SECTION B-B

NB PARAPET SHOWN, SB SIMILAR

DGN File: IP_PWPcdms1717\4433_C343-28_PerptDtlsof2.dgn
02-MAY-2005

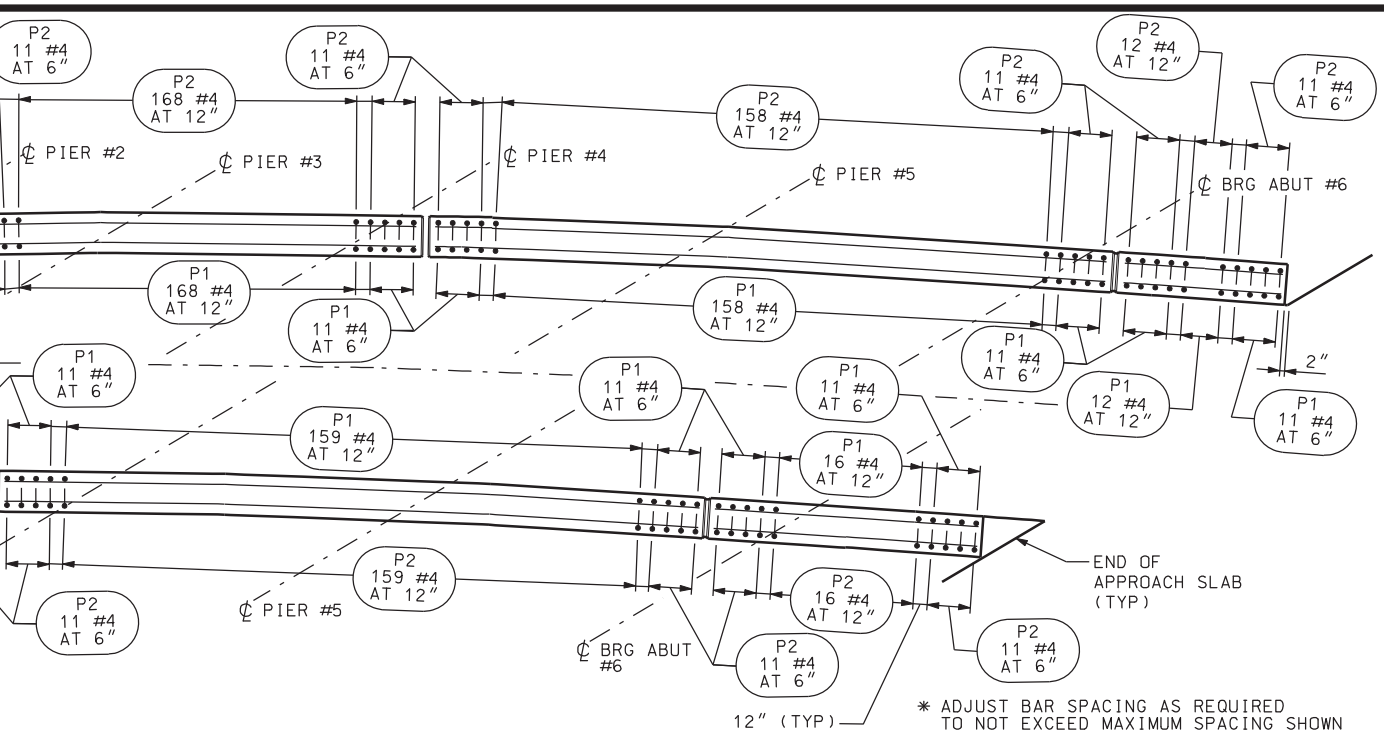


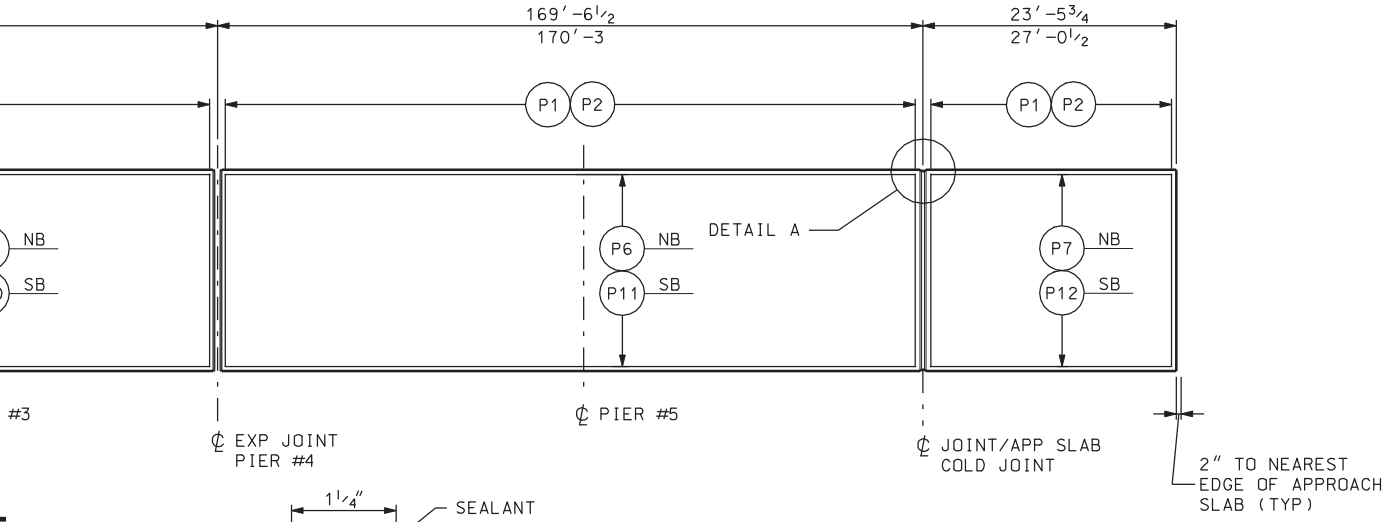


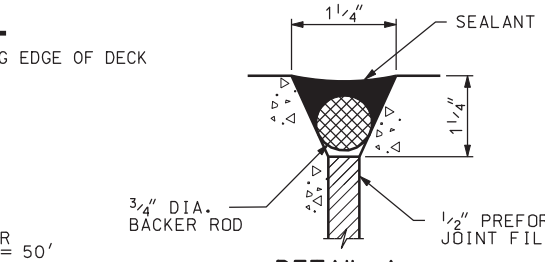


DETAIL A

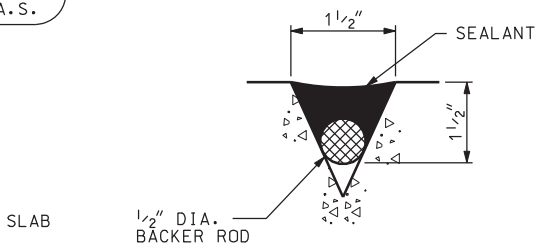


DETAIL C

## NOTES

1. ALTERNATE ALL REINFORCING STEEL SPLICES.
2. PROVIDE 2" MIN. COVER TO REINFORCING STEEL UNLESS NOTED OTHERWISE.
3. PLACE CONTRACTION JOINT ON SIDES AND TOP OF PARAPET AT 12'-0 O.C. MAX. SEE DETAIL C.
4. EXTEND SEALANT AND FOAM BACKER ROD FROM DECK TO TOP OF PARAPET ON THE INSIDE PARAPET FACE AND ACROSS TOP OF PARAPET.
5. SEE PARAPET END DETAILS FOR ADDITIONAL DETAILS.

| QUANTITIES STRUCTURAL CONCRETE | |
|---|---|
| PARAPETS | 135.0 CY |

| NO. | DATE | BY | REMARKS |
|---|---|---|---|
| | | | |

REVISIONS

Baker

UTAH DEPARTMENT OF TRANSPORTATION
SALT LAKE CITY, UTAH
STRUCTURES DIVISION

DESIGN JPD 12/04 CHECK MSA 12/04
DRAWN GCK 12/04 CHECK MSA 12/04
QUANT. JPD 01/05 CHECK MSA 01/05

APPROVAL RECOMM. DATE DESIGN ENGR.
APPROVED FOR USE BY UDOT DATE UDOT BRIDGE ENGR.

I-15: UTAH COUNTY
U.P.R.R. & US-89 OVERPASS
PARAPET DETAILS

PROJECT NUMBER SP-15-6(52)241

UTAH
COUNTY

C-343W2
DRG. NO.

SHT. 28 OF 35

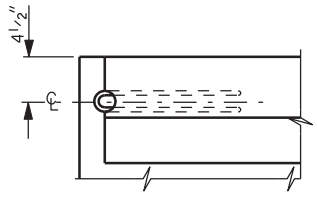


PLAN

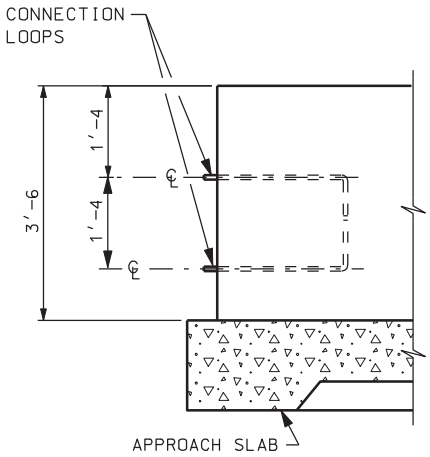


ELEVATION

STANDARD END DETAILS

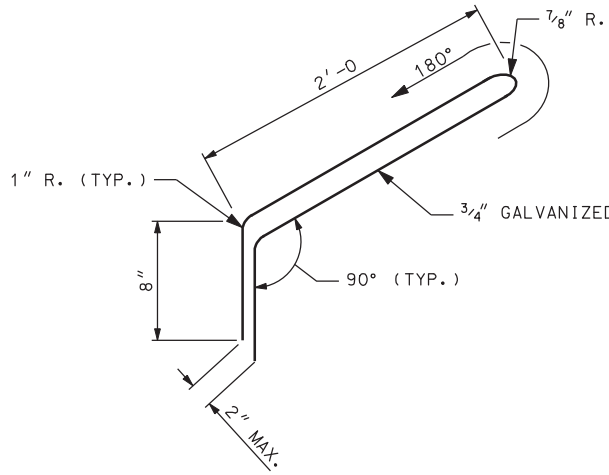


CONNECTION LOOP DETAIL

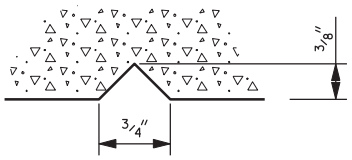


TYPICAL SECTION

THRU STRUCTURE NUMBER

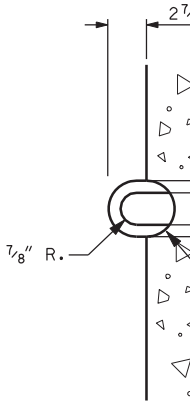


CON

DGN File:IP_PWPcdms1717\4433_C343-29_PerptDtl2of2.dgn

02-MAY-2005

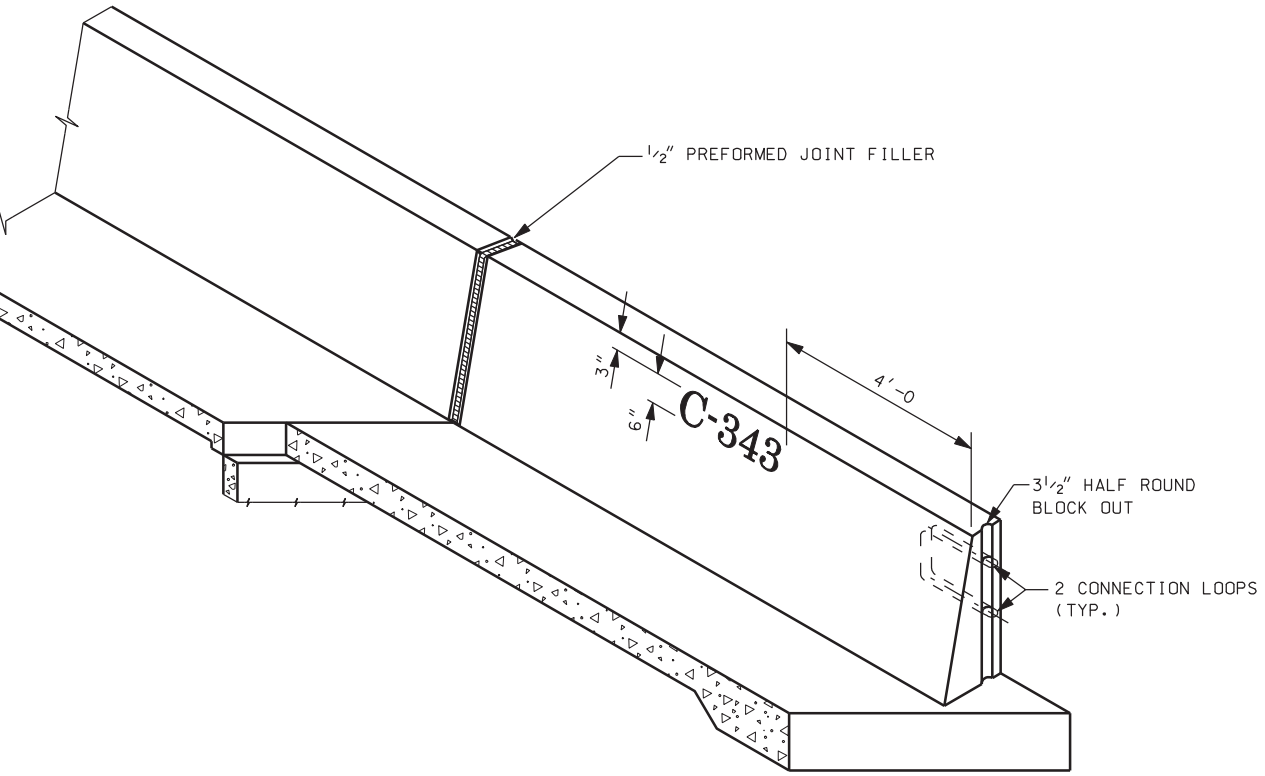


D STEEL BAR

STANDARD END ISOMETRIC

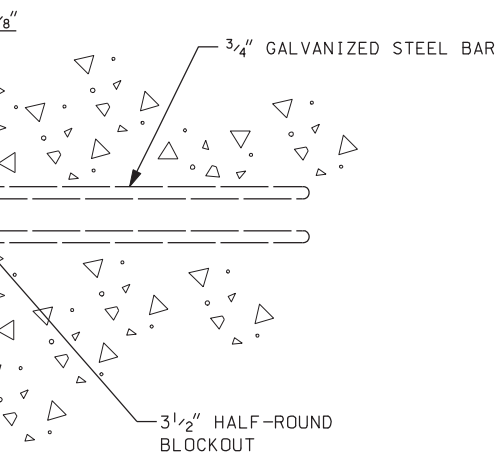


NECTION BAR END DETAIL

## NOTES

1. INSTALL CONNECTION LOOPS AT ALL PARAPET ENDS.
2. CONNECTION LOOPS ARE NOT INCLUDED IN REINFORCING STEEL SCHEDULE.

| NO. | DATE | BY | REMARKS |
|---|---|---|---|

REVISIONS

UTAH DEPARTMENT OF TRANSPORTATION
SALT LAKE CITY, UTAH
STRUCTURES DIVISION

Baker

DESIGN JPD 12/04 CHECK AW 12/04
DRAWN GCK 12/04 CHECK MSA 12/04
QUANT. CHECK

APPROVAL RECOMM. DATE DESIGN ENGR.
APPROVED FOR USE BY UDOT DATE UDOT BRIDGE ENGR.

I-15: UTAH COUNTY
U.P.R.R. & US-89 OVERPASS
PARAPET END DETAILS
PROJECT NUMBER SP-15-6(52)241

UTAH
COUNTY

C-343W2
DRG. NO.

SHT. 29 OF 35

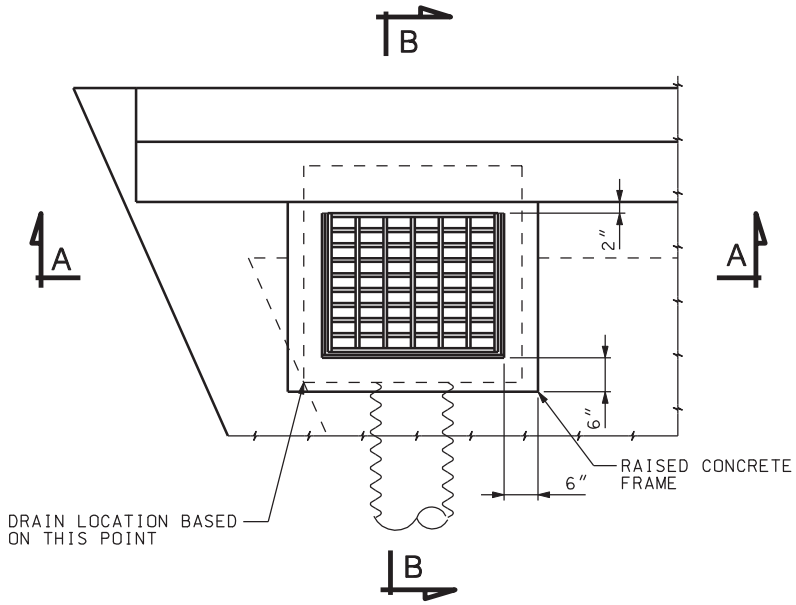


## TYPICAL PLAN

(NORTH SHOWN, SOUTH SIMILAR)

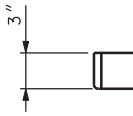


## LEGEND

AS AS SHOWN

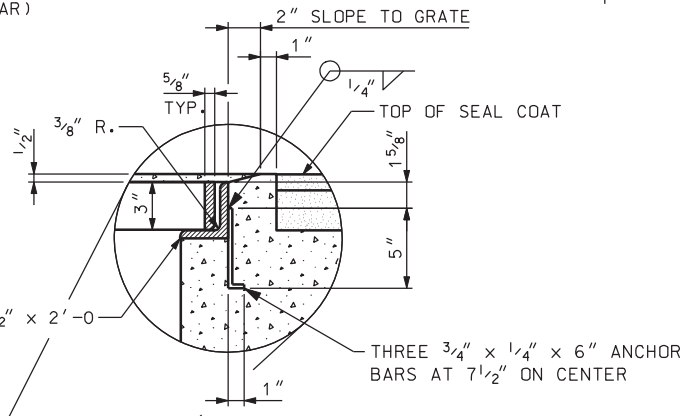


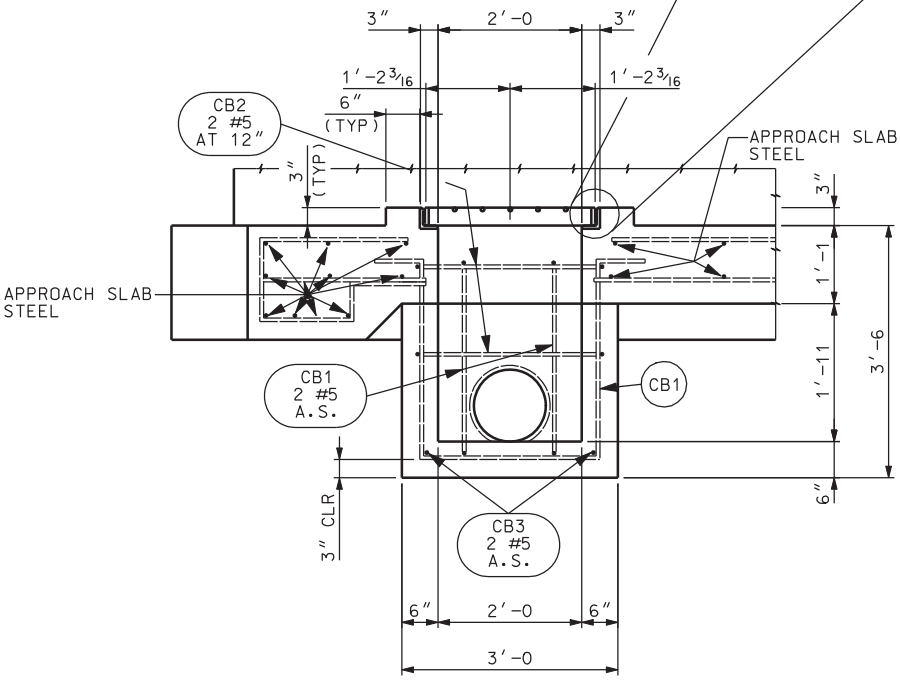


## SECTION A-A

DGN File:IP_PWPcdms1717\4433_C343-30_AppDrain01.dgn
02-MAY-2005

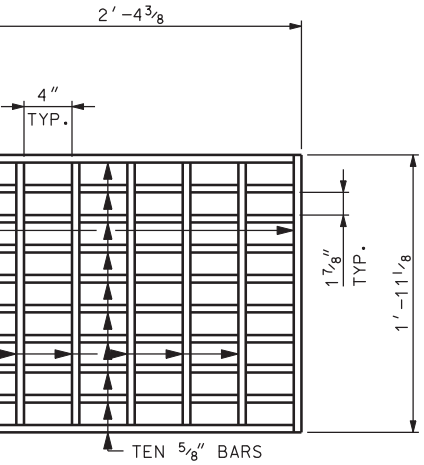


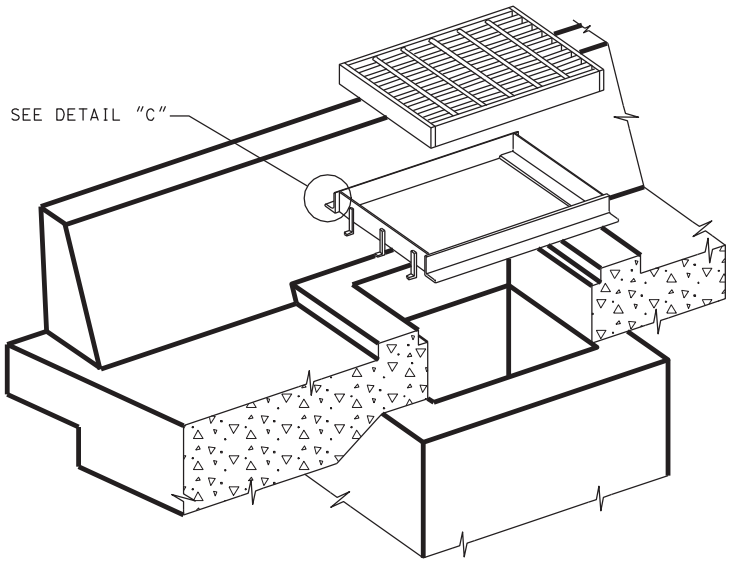


ISOMETRIC

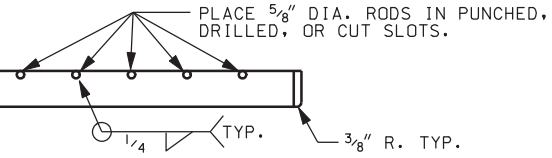


GRATE DETAIL

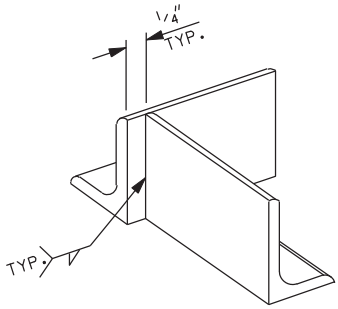


DETAIL "C"

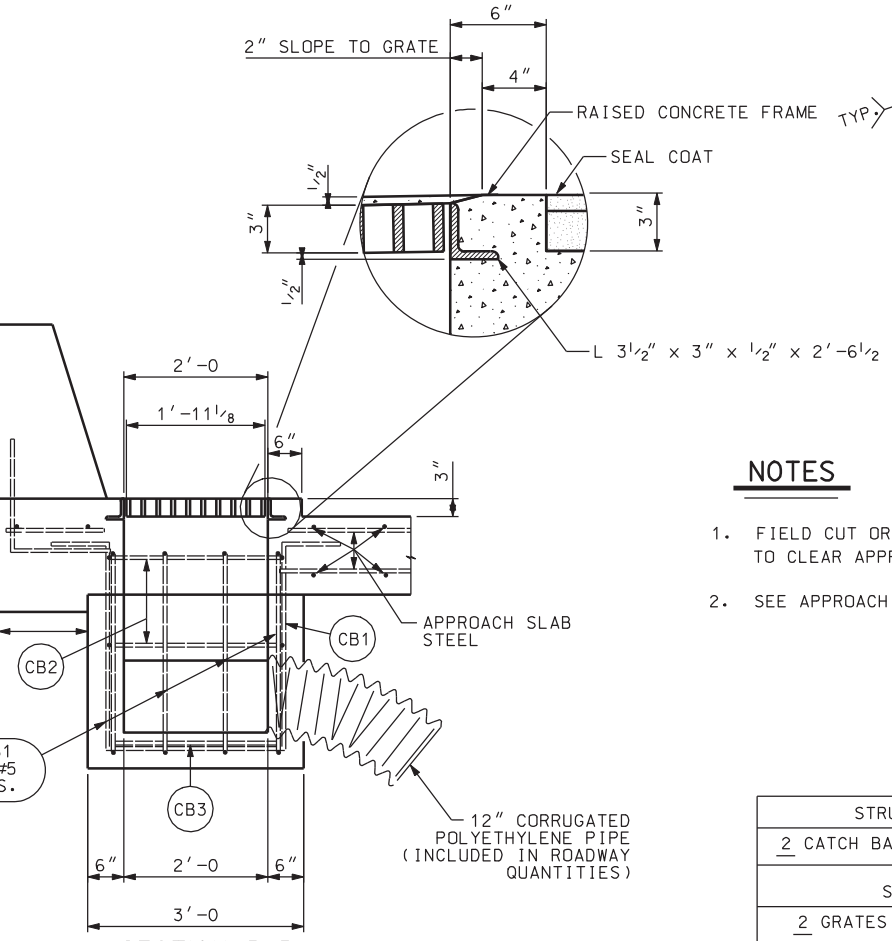


SECTION B-B

## NOTES

1. FIELD CUT OR BEND APPROACH SLAB REINFORCING TO CLEAR APPROACH SLAB DRAINS.
2. SEE APPROACH SLAB SHEET FOR ACTUAL LOCATIONS OF DRAINS.

## QUANTITIES

| STRUCTURAL CONCRETE QUANTITIES |
|---|
| 2 CATCH BASINS AT 0.5 CU. YDS = 1.0 CU. YDS |
| STRUCTURAL STEEL QUANTITY |
| 2 GRATES AND FRAMES AT 273 LBS = 546 LBS |

| NO. | DATE | BY | REMARKS |
|---|---|---|---|
| | | | |

REVISIONS

Baker

UTAH DEPARTMENT OF TRANSPORTATION
SALT LAKE CITY, UTAH
STRUCTURES DIVISION

DESIGN MSA 12/04 CHECK AW 12/04
DRAWN GCK 12/04 CHECK JPD 12/04
QUANT. JPD 01/05 CHECK MSA 01/05

APPROVAL RECOMM. DATE DESIGN ENGR.
APPROVED FOR USE BY UDOT DATE UDOT BRIDGE ENGR.

I-15: UTAH COUNTY
U.P.R.R. & US-89 OVERPASS
APPROACH SLAB DRAIN DETAILS
PROJECT NUMBER SP-15-6(52)241

UTAH
COUNTY

C-343W2
DRG. NO.

SHT. 30 OF 35

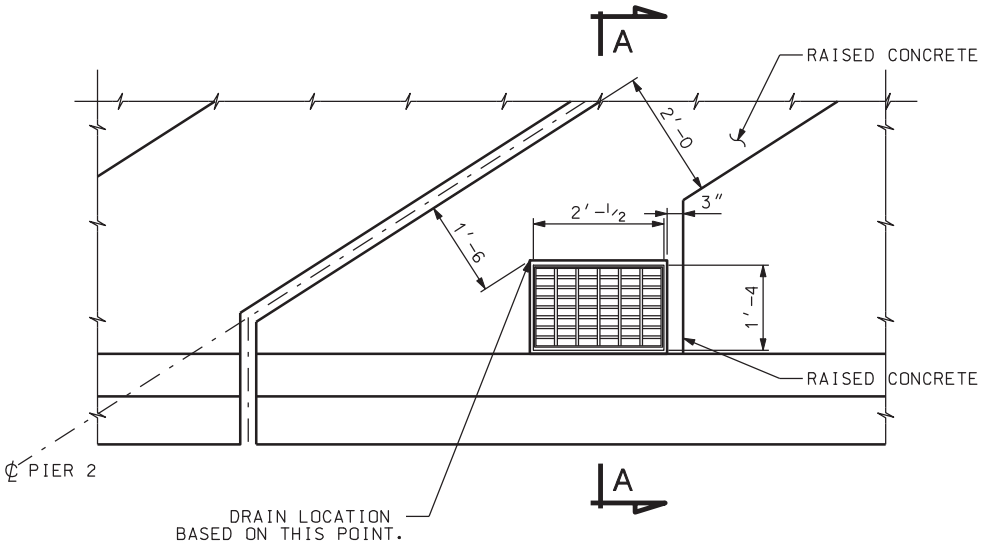


PLAN

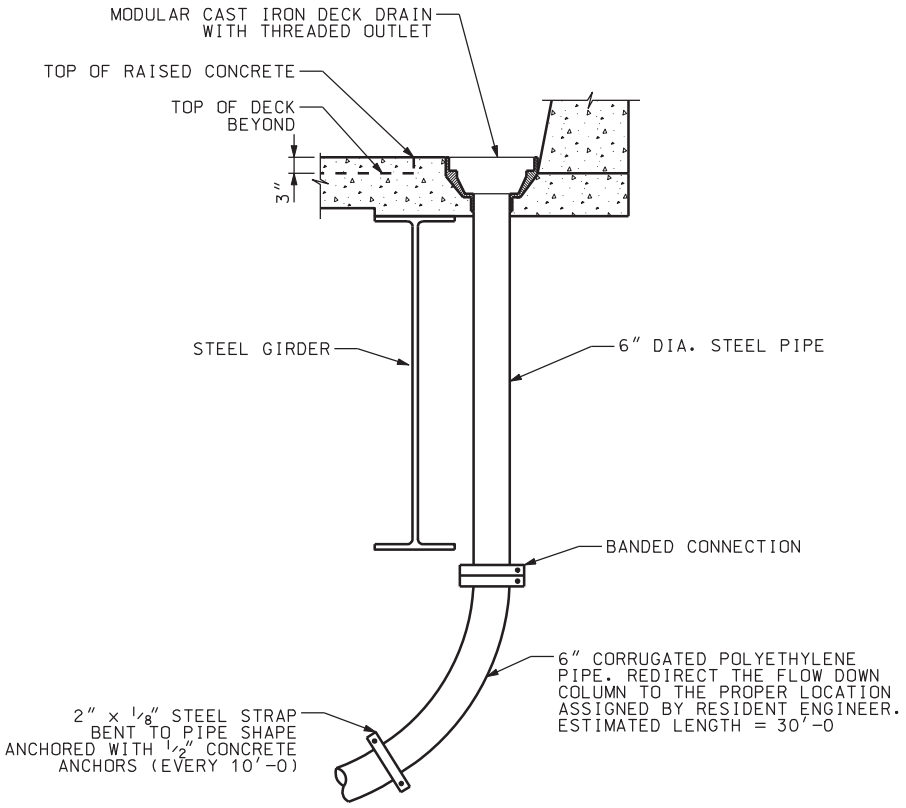


SECTION A-A

DGN File:IP_PWPcdms1717\4433_C343-31_DeckDrain.dgn
02-MAY-2005

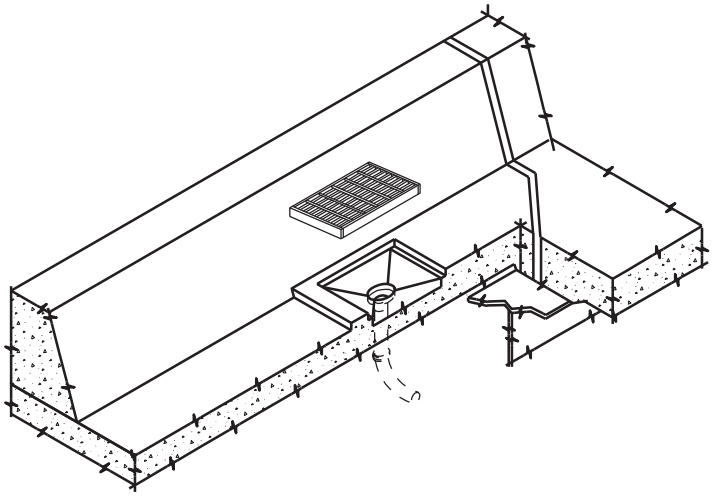

ISOMETRIC

## NOTES

1. INCLUDE ONE DECK DRAIN IN CONTRACT PRICE FOR STRUCTURAL STEEL, APPROXIMATE WEIGHT 380 lbs.
2. INCLUDE DRAIN PIPE, PIPE BRACKETS AND HARDWARE ASSOCIATED WITH DRAIN AND PIPE IN THE CONTRACT PRICE FOR STRUCTURAL STEEL.
3. SUBMIT DECK DRAIN SHOP DRAWINGS TO ENGINEER FOR APPROVAL.

| NO. | DATE | BY | REMARKS |
|---|---|---|---|

REVISIONS

UTAH DEPARTMENT OF TRANSPORTATION
SALT LAKE CITY, UTAH
STRUCTURES DIVISION

Baker

DESIGN JPD 12/04 CHECK AW 12/04
DRAWN GCK 12/04 CHECK MSA 12/04
QUANT. JPD 01/05 CHECK MSA 01/05

APPROVAL RECOMM. DATE DESIGN ENGR.
APPROVED FOR USE BY UDOT DATE UDOT BRIDGE ENGR.

I-15: UTAH COUNTY
U.P.R.R. & US-89 OVERPASS
DECK DRAIN DETAIL

PROJECT NUMBER SP-15-6(52)241

UTAH
COUNTY

C-343W2
DRG. NO.

SHT. 31 OF 35

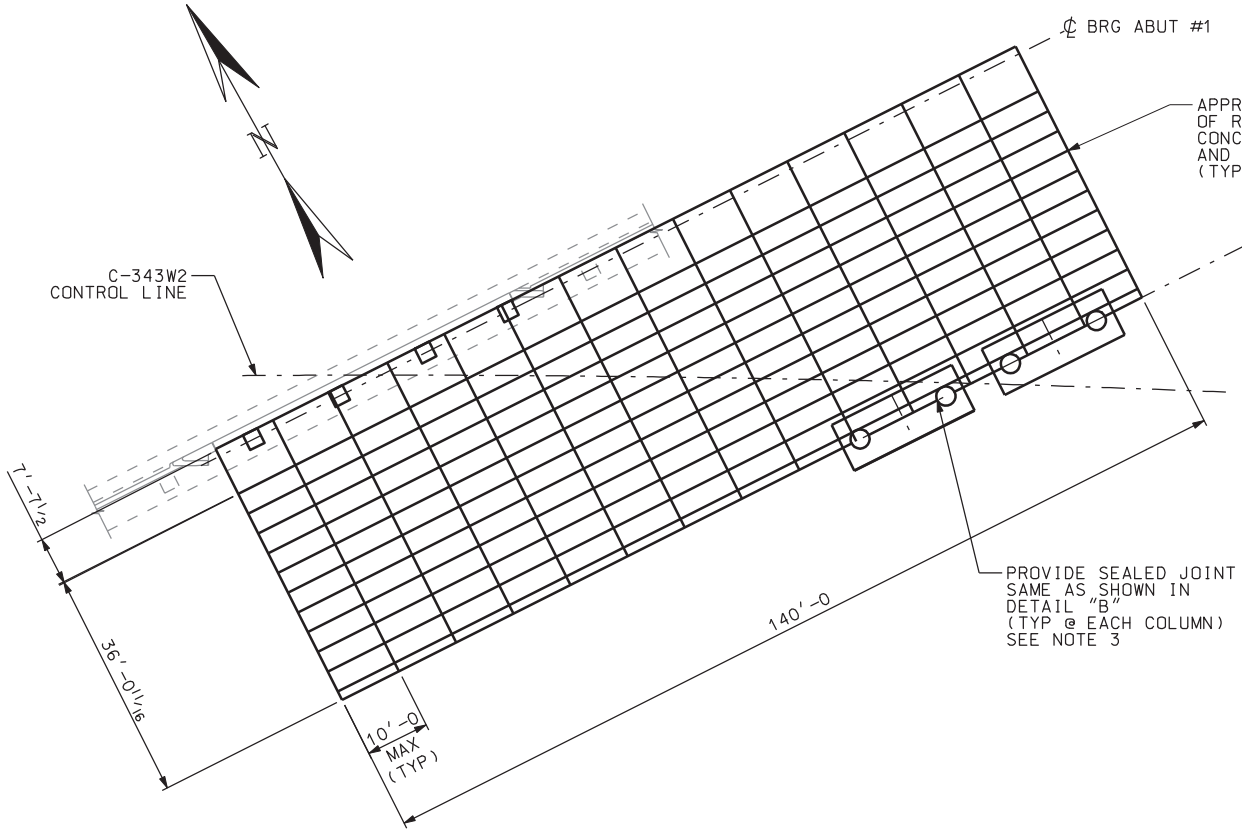


PLAN

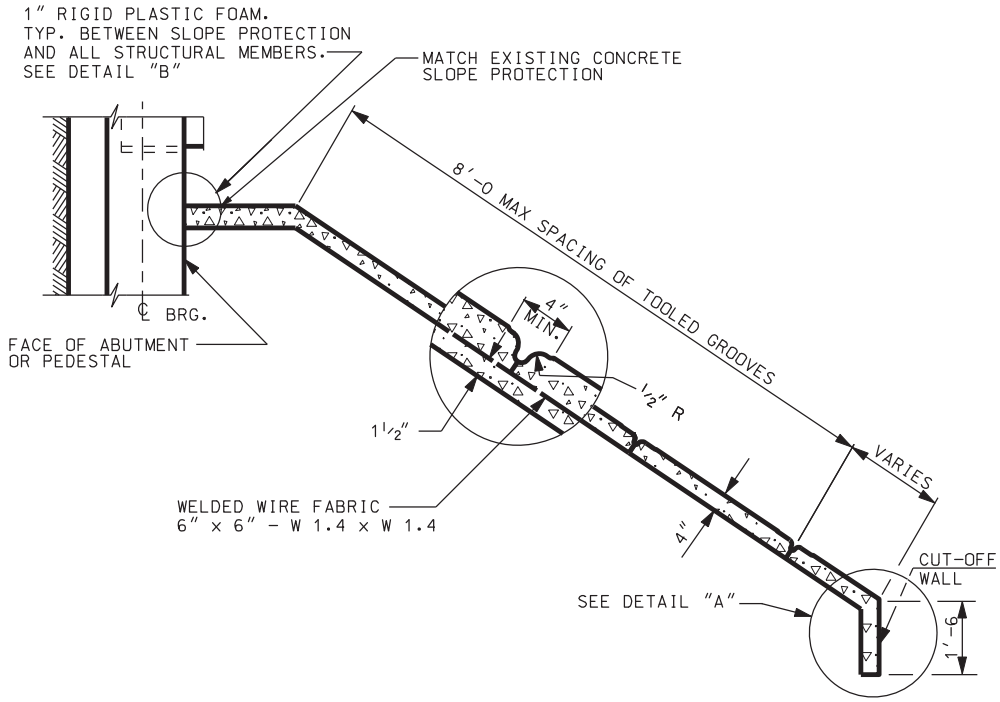


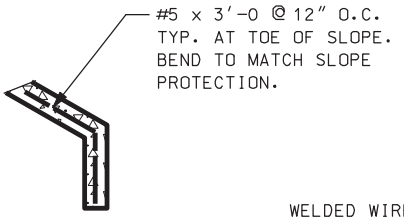


DETAIL "A"

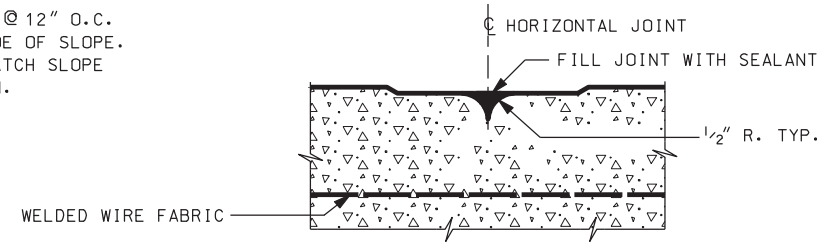


HORIZONTAL JOINT DETAIL

CONSTRUCTION J
AS NEEDED

WI

DGN File: IP_PWPdms1717\4433_C343-32_ConcSlo.dgn

02-MAY-2005

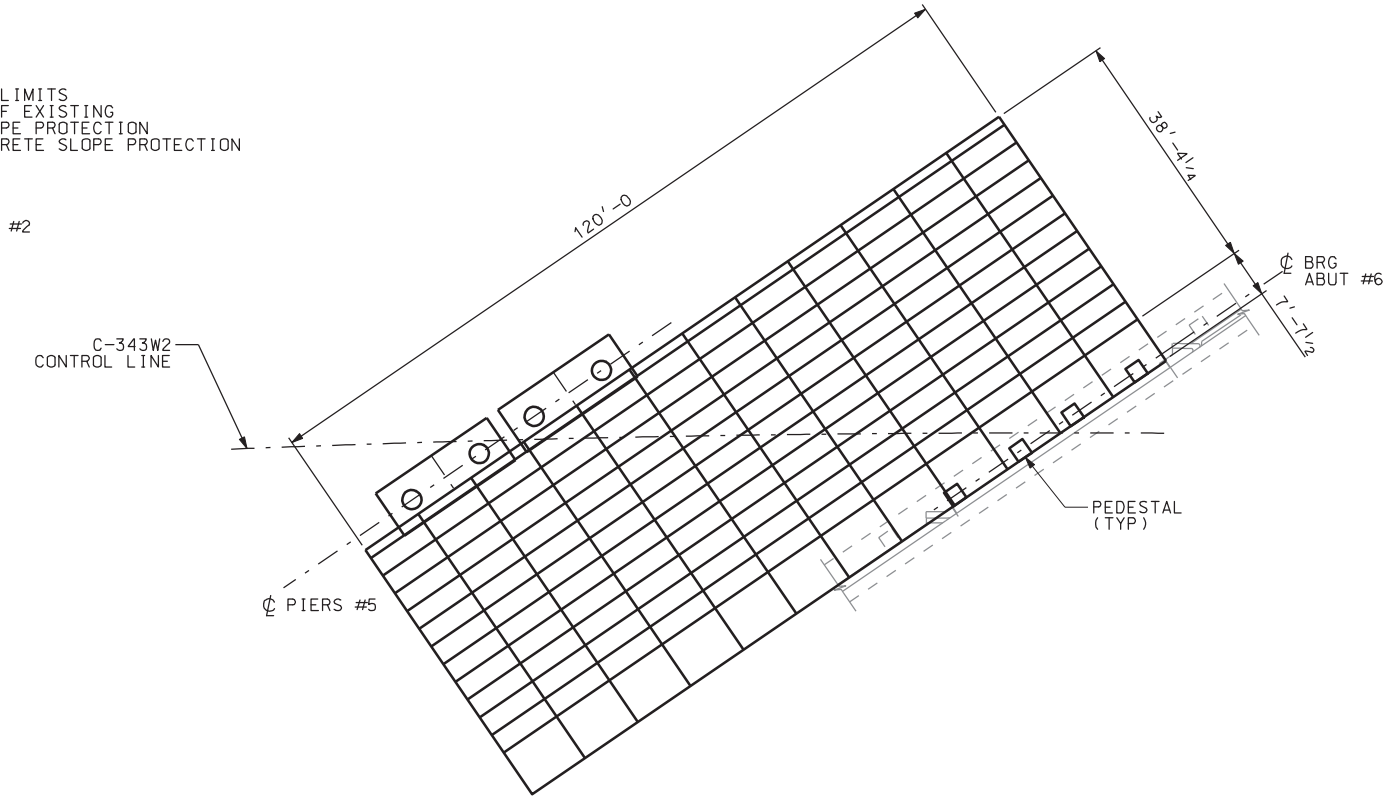


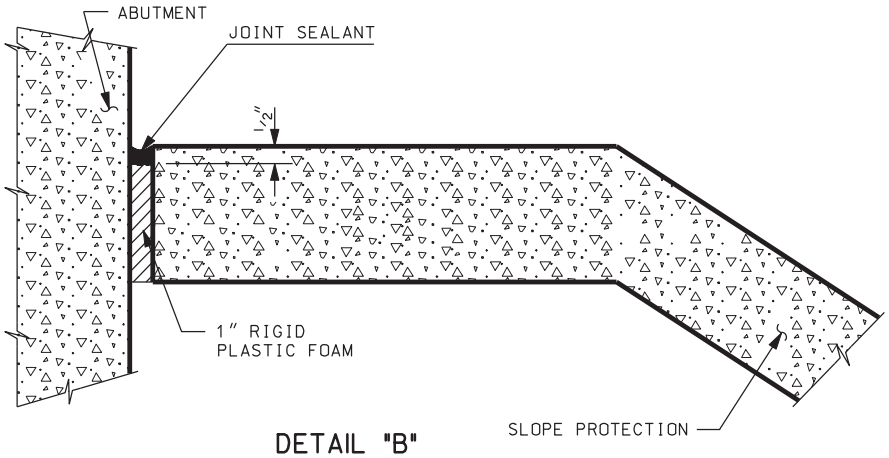


## DETAIL "B"

## NOTES

1. QUANTITIES GIVEN FOR CONCRETE SLOPE PROTECTION ARE ESTIMATES ONLY AND ARE BASED ON THE EXPOSED FINISHED CONCRETE SURFACE AREA AT TIME OF PLACEMENT.
2. MATCH NEW CONCRETE SLOPE PROTECTION TO EXISTING CONCRETE SLOPE PROTECTION WITH DETAIL SIMILAR TO THE VERTICAL JOINT DETAIL.
3. JUST PRIOR TO FINAL INSPECTION SEAL JOINTS BETWEEN THE CONCRETE SLOPE PROTECTION AND ALL STRUCTURAL MEMBERS.
4. USE CLASS A (AE) CONCRETE FOR ALL SLOPE PROTECTION.
5. INCLUDE PAYMENT FOR FURNISHING AND PLACING WELDED WIRE FABRIC, SLOPE PROTECTION.GROOVE FILLER, AND JOINT FILLERS IN CONTRACT PRICE FOR SLOPE PROTECTION.

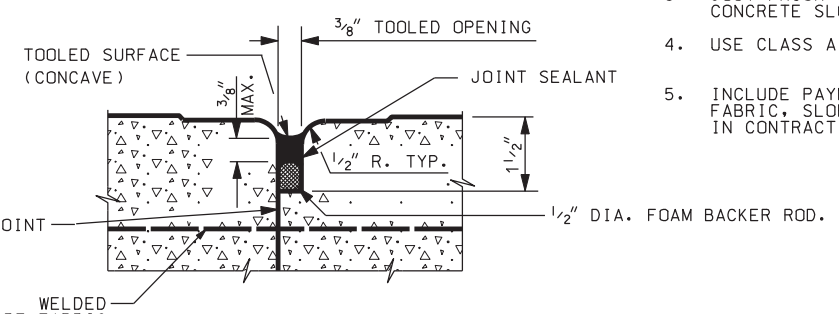


## VERTICAL JOINT DETAIL

**REPLACE CONCRETE SLOPE PROTECTION QUANTITIES**

| | SQ. YDS |
|---|---|
| AT ABUTMENT # 1 | 758.7 |
| AT ABUTMENT # 6 | 685.1 |
| TOTAL | 1443.8 |

| NO. | DATE | BY | REMARKS |
|---|---|---|---|
| | | | |

REVISIONS

UTAH DEPARTMENT OF TRANSPORTATION
SALT LAKE CITY, UTAH
STRUCTURES DIVISION

Baker

DESIGN JPD 01/05 CHECK AW 01/05
DRAWN GCK 01/05 CHECK JPD 01/05
QUANT. AW 01/05 CHECK JPD 01/05

APPROVAL RECOMM. DATE DESIGN ENGR.
APPROVED FOR USE BY UDOT DATE UDOT BRIDGE ENGR.

I-15: UTAH COUNTY
U.P.R.R. & US-89 OVERPASS
CONCRETE SLOPE PROTECTION

PROJECT NUMBER SP-15-6(52)241

UTAH
COUNTY

C-343W2
DRG. NO.

SHT. 32 OF 35

# REINFORCING

| | MARK | SIZE | QTY | LENGTH | TOTAL | DIAGRAM |
|---|---|---|---|---|---|---|
| DECK | S1 | 5 | 34 | 100′-0 | 3400′-0 | 95′-0; 2′-6 MIN (TYP) |
| | S2 | 5 | 34 | 192′-3 | 6535′-6 | 182′-3; 2′-6 MIN (TYP) |
| | S3 | 5 | 34 | 180′-8 | 6142′-8 | 170′-8; 2′-6 MIN (TYP) |
| | S4 | 5 | 34 | 98′-3 | 3340′-6 | 93′-3; 2′-6 MIN (TYP) |
| | S5 | 5 | 34 | 189′-5 | 6440′-2 | 179′-5; 2′-6 MIN (TYP) |
| | S6 | 5 | 34 | 179′-7 | 6105′-10 | 169′-7; 2′-6 MIN (TYP) |
| | S7 | 5 | 128 | 24′-4 | 3114′-8 | 24′-4 |
| | S8 | 5 | 112 | VARIES | 994′-0 | 2′-0 TO 15′-9 BY 3″ |
| | | | | 2 SETS | | |
| | S9 | 5 | 258 | 15′-10 | 4085′-0 | 15′-10 |
| | S10 | 5 | 92 | VARIES | 701′-6 | 2′-0 TO 13′-3 BY 3″ |
| | | | | 2 SETS | | |
| | S11 | 5 | 106 | VARIES | 901′-0 | 2′-0 TO 15′-0 BY 3″ |
| | | | | 2 SETS | | |
| | S12 | 5 | 610 | 15′-10 | 9658′-4 | 15′-10 |
| | S13 | 5 | 82 | VARIES | 642′-4 | 2′-0 TO 13′-8 BY 3½″ |
| | | | | 2 SETS | | |
| | S14 | 5 | 92 | VARIES | 787′-9 | 2′-0 TO 15′-2 BY 3½″ |
| | | | | 2 SETS | | |
| | S15 | 5 | 592 | 15′-10 | 9373′-4 | 15′-10 |
| | S16 | 5 | 72 | VARIES | 564′-0 | 2′-0 TO 13′-8 BY 4″ |
| | | | | 2 SETS | | |
| | S17 | 5 | 100 | VARIES | 812′-6 | 2′-0 TO 14′-3 BY 3″ |
| | | | | 2 SETS | | |
| | S18 | 5 | 264 | 16′-0 | 4224′-0 | 16′-0 |
| | S19 | 5 | 108 | VARIES | 931′-6 | 2′-0 TO 15′-3 BY 3″ |
| | | | | 2 SETS | | |
| | S20 | 5 | 94 | VARIES | 773′-5 | 2′-0 TO 14′-5 BY 3¼ |
| | | | | 2 SETS | | |
| | S21 | 5 | 622 | 16′-0 | 9952′-0 | 16′-0 |
| | S22 | 5 | 94 | VARIES | 818′-7 | 2′-0 TO 15′-5 BY 3½″ |
| | | | | 2 SETS | | |
| | S23 | 5 | 82 | VARIES | 676′-6 | 2′-0 TO 14′-6 BY 3¾″ |
| | | | | 2 SETS | | |
| | S24 | 5 | 594 | 16′-0 | 9504′-0 | 16′-0 |
| | S25 | 5 | 84 | VARIES | 742′-0 | 2′-0 TO 15′-8 BY 4″ |
| | | | | 2 SETS | | |
| | S26 | 5 | 8 | 36′-0 | 288′-0 | 36′-0 |
| | S27 | 5 | 8 | 28′-6 | 228′-0 | 28′-6 |

| | MARK | SIZE | QTY | LENGTH | TO |
|---|---|---|---|---|---|
| DECK | S28 | 5 | 8 | 36′-6 | 29 |
| | S29 | 5 | 8 | 28′-9 | 23 |
| | S30 | 5 | 4 | 34′-0 | 13 |
| | S31 | 5 | 4 | 30′-11 | 12 |
| | S32 | 5 | 4 | 34′-7 | 13 |
| | S33 | 5 | 4 | 31′-4 | 12 |
| | S34 | 5 | 6 | 12′-2 | 73 |
| | S35 | 5 | 6 | 9′-10 | 59 |
| | S36 | 5 | 6 | 11′-0 | 66 |
| | S37 | 5 | 6 | 10′-6 | 63 |
| | S38 | 6 | 6 | 12′-7 | 75 |
| | S39 | 6 | 6 | 10′-2 | 61 |
| | S40 | 6 | 6 | 11′-3 | 67 |
| | S41 | 6 | 6 | 10′-9 | 64 |
| | S42 | 6 | 120 | 8′-0 | 96 |
| | S43 | 4 | 1109 | 4′-2 | 462 |
| | S44 | 4 | 1109 | 3′-3 | 360 |
| | S45 | 4 | 204 | 5′-9 | 117 |
| | S46 | 8 | 68 | 6′-0 | 40 |
| PARAPET | P1 | 4 | 1109 | 3′-2 | 351 |
| | P2 | 4 | 1109 | 3′-11 | 43 |
| | P3 | 4 | 9 | 34′-4 | 30 |
| | P4 | 4 | 9 | 97′-7 | 87 |
| | P5 | 4 | 9 | 188′-0 | 16 |

G STEEL SCHEDULE

| TAL | DIAGRAM |
|---|---|
| 92′-0 | 36′-6 |
| 30′-0 | 28′-9 |
| 36′-0 | 34′-0 |
| 23′-8 | 30′-11 |
| 38′-4 | 34′-7 |
| 25′-4 | 31′-4 |
| 3′-0 | 12′-2 |
| 9′-0 | 9′-10 |
| 6′-0 | 11′-0 |
| 3′-0 | 10′-6 |
| 5′-6 | 12′-7 |
| ′-0 | 10′-2 |
| 7′-6 | 11′-3 |
| 4′-6 | 10′-9 |
| 60′-0 | 8′-0 |
| 0′10 | 1′-0, 3′-2, 2½″ |
| 04′-3 | 8″, 2′-7 |
| 73′-0 | 3′-0, 6″, 3″, 1′-10, 4″ |
| 08′-0 | 6′-0 |
| 11′-10 | 3′-2 |
| 43′-7 | 8″, 8″, 3′-2 |
| 09′-0 | 34′-4 |
| 78′-3 | 92′-11, 2′-4 MIN (TYP) |
| 92′-0 | 178′-8, 2′-4 MIN (TYP) |

| | MARK | SIZE | QTY | LENGTH | TOTAL | DIAGRAM |
|---|---|---|---|---|---|---|
| PARAPET | P6 | 4 | 9 | 178′-5 | 1605′-9 | 169′-1, 2′-4 MIN (TYP) |
| | P7 | 4 | 9 | 23′-1 | 207′-9 | 23′-1 |
| | P8 | 4 | 9 | 29′-6 | 265′-6 | 29′-6 |
| | P9 | 4 | 9 | 98′-1 | 882′-9 | 93′-5, 2′-4 MIN (TYP) |
| | P10 | 4 | 9 | 180′-11 | 1628′-3 | 179′-7, 2′-4 MIN (TYP) |
| | P11 | 4 | 9 | 179′-1 | 1611′-9 | 169′-9, 2′-4 MIN (TYP) |
| | P12 | 4 | 9 | 26′-8 | 240′-0 | 26′-8 |
| ABUTMENT | A1 | 6 | 160 | 4′-6 | 720′-0 | 4′-6 |
| | A2 | 6 | 20 | 5′-7 | 111′-8 | 5′-7 |
| | A3 | 6 | 20 | 5′-2 | 103′-4 | 5′-2 |
| | A4 | 6 | 20 | 6′-3 | 125′-0 | 6′-3 |
| | A5 | 6 | 20 | 5′-9 | 115′-0 | 5′-9 |
| | A6 | 6 | 20 | 3′-9 | 75′-0 | 3′-9 |
| | A7 | 6 | 20 | 3′-5 | 68′-4 | 3′-5 |
| | A8 | 6 | 20 | 4′-9 | 95′-0 | 4′-9 |
| | A9 | 6 | 20 | 4′-6 | 90′-0 | 4′-6 |
| | A10 | 4 | 116 | 2′-8 | 309′-4 | 2′-0, 8″ |
| | A11 | 4 | 67 | 12′-6 | 837′-6 | 2′-3 (TYP), 2′-0 (TYP) |
| | A12 | 5 | 96 | 3′-10 | 368′-0 | 2′-2, 10″ (TYP) |
| | A13 | 6 | 136 | 2′-4 | 317′-4 | 1′-4, 1′-0 |

## NOTES

1. SEE REINFORCEMENT SCHEDULE 3 OF 3 SHEET FOR NOTES.

| NO. | DATE | BY | REMARKS |
|---|---|---|---|
| | | | |

REVISIONS

Baker

UTAH DEPARTMENT OF TRANSPORTATION
SALT LAKE CITY, UTAH
STRUCTURES DIVISION

DESIGN JPD 11/04 CHECK AW 12-04
DRAWN GCK 11/04 CHECK JPD 12/04
QUANT. CHECK

APPROVAL RECOMM. DATE DESIGN ENGR.
APPROVED FOR USE BY UDOT DATE UDOT BRIDGE ENGR.

I-15: UTAH COUNTY
U.P.R.R. & US-89 OVERPASS
REINFORCEMENT SCHEDULE 1 OF 3
PROJECT NUMBER SP-15-6(52)241

UTAH
COUNTY

C-343W2
DRG. NO.

SHT. 33 OF 35

# REINFORCING

| | MARK | SIZE | QTY | LENGTH | TOTAL | DIAGRAM |
|---|---|---|---|---|---|---|
| PIER CAP | B1 | 5 | 224 | 11′-10¾ | 2664′-8 | 2′-3⅜ / 3′-8 |
| | B2 | 5 | 80 | 7′-6⅞ | 605′-10 | 2′-0 / 3′-6⅞ |
| | B3 | 5 | 96 | 9′-7⅜ | 923′-0 | 2′-3⅜ / 3′-8 |
| | B4 | 10 | 24 | 22′-8 | 544′-0 | 22′-8 |
| | B5 | 8 | 12 | 22′-8 | 272′-0 | 22′-8 |
| | B6 | 10 | 24 | 21′-2 | 508′-0 | 21′-2 |
| | B7 | 8 | 12 | 21′-2 | 254′-0 | 21′-2 |
| | B8 | 10 | 24 | 19′-8 | 472′-0 | 19′-8 |
| | B9 | 8 | 12 | 19′-8 | 236′-0 | 19′-8 |
| | B10 | 10 | 24 | 18′-11 | 454′-0 | 18′-11 |
| | B11 | 8 | 12 | 18′-11 | 227′-0 | 18′-11 |
| PIER COLUMN | C1 | 9 | 16 | 33′-8½ | 539′-4 | 1′-7 (TYP) / 30′-6½ |
| | C2 | 9 | 16 | 34′-1½ | 546′-0 | 1′-7 (TYP) / 30′-11½ |
| | C3 | 9 | 16 | 32′-11 | 526′-8 | 1′-7 (TYP) / 29′-9 |
| | C4 | 9 | 16 | 33′-3½ | 532′-8 | 1′-7 (TYP) / 30′-1½ |
| | C5 | 4 | 1 | – | 991′-0 | 2′-8 O.D. / 29′-6½ / 3″ PITCH |
| | C6 | 4 | 1 | – | 1004′-8½ | 2′-8 O.D. / 29′-11½ / 3″ PITCH |
| | C7 | 4 | 1 | – | 964′-10 | 2′-8 O.D. / 28′-9 / 3″ PITCH |
| | C8 | 4 | 1 | – | 977′-3 | 2′-8 O.D. / 29′-1½ / 3″ PITCH |
| | C11 | 9 | 16 | 34′-1 | 545′-4 | 1′-7 (TYP) / 30′-11 |

| | MARK | SIZE | QTY | LENGTH | TOT |
|---|---|---|---|---|---|
| PIER COLUMN | C12 | 9 | 16 | 34′-5½ | 55 |
| | C13 | 9 | 16 | 33′-2 | 53 |
| | C14 | 9 | 16 | 33′-6½ | 53 |
| | C15 | 4 | 1 | – | 10 |
| | | | | | 2′- |
| | C16 | 4 | 1 | – | 1015 |
| | | | | | 2′- |
| | C17 | 4 | 1 | – | 97 |
| | | | | | 2′- |
| | C18 | 4 | 1 | – | 98 |
| | | | | | 2′- |
| | C21 | 9 | 16 | 34′-3½ | 54 |
| | C22 | 9 | 16 | 34′-7 | 55 |
| | C23 | 9 | 16 | 33′-3½ | 53 |
| | C24 | 9 | 16 | 33′-7 | 53 |
| | C25 | 4 | 1 | – | 1010 |
| | | | | | 2′- |
| | C26 | 4 | 1 | – | 1019 |
| | | | | | 2′- |
| | C27 | 4 | 1 | – | 97 |
| | | | | | 2′- |
| | C28 | 4 | 1 | – | 98 |
| | | | | | 2′- |
| | C31 | 9 | 16 | 34′-1½ | 54 |

DGN File:IP_PWPdnsl1717\4433_C343-34_ReinfSch2of3.dgn
02-MAY-2005

# S STEEL SCHEDULE

| TAL | DIAGRAM |
|---|---|
| 1′-4 | 1′-7 (TYP); 31′-3½ |
| 0′-8 | 1′-7 (TYP); 30′-0 |
| 6′-8 | 1′-7 (TYP); 30′-4½ |
| 03′-4 | -8 O.D.; 29′-11; 3″ PITCH |
| 5′-8½ | -8 O.D.; 30′-3½; 3″ PITCH |
| 3′-1½ | -8 O.D.; 29′-0; 3″ PITCH |
| 5′-6 | -8 O.D.; 29′-4½; 3″ PITCH |
| 8′-8 | 1′-7 (TYP); 31′-1½ |
| 3′-4 | 1′-7 (TYP); 31′-5 |
| 2′-8 | 1′-7 (TYP); 30′-1½ |
| 7′-4 | 1′-7 (TYP); 30′-5 |
| 0′-2½ | -8 O.D.; 30′-1½; 3″ PITCH |
| 9′-10 | -8 O.D.; 30′-5; 3″ PITCH |
| 7′-3 | -8 O.D.; 29′-1½; 3″ PITCH |
| 6′-10 | -8 O.D.; 29′-5; 3″ PITCH |
| 6′-0 | 1′-7 (TYP); 30′-11½ |

| | MARK | SIZE | QTY | LENGTH | TOTAL | DIAGRAM |
|---|---|---|---|---|---|---|
| PIER COLUMN | C32 | 9 | 16 | 34′-4½ | 550′-0 | 1′-7 (TYP); 31′-2½ |
| | C33 | 9 | 16 | 33′-1 | 529′-4 | 1′-7 (TYP); 29′-11 |
| | C34 | 9 | 16 | 33′-4 | 533′-4 | 1′-7 (TYP); 30′-2 |
| | C35 | 4 | 1 | – | 1004′-8½ | 2′-8 O.D.; 29′-11½; 3″ PITCH |
| | C36 | 4 | 1 | – | 1012′-11½ | 2′-8 O.D.; 30′-2½; 3″ PITCH |
| | C37 | 4 | 1 | – | 970′-4½ | 2′-8 O.D.; 28′-11; 3″ PITCH |
| | C38 | 4 | 1 | – | 978′-7 | 2′-8 O.D.; 29′-2; 3″ PITCH |
| PIER FOOTING | F1 | 8 | 176 | 7′-8 | 1349′-4 | 7′-8 |
| | F2 | 8 | 72 | 20′-8 | 1488′-0 | 20′-8 |
| | F3 | 5 | 1120 | 3′-5½ | 3873′-4 | 6″; 6″; 6″; 2′-3 |

## LEGEND

O.D. OUTSIDE DIAMETER

## NOTES

1. SEE REINFORCEMENT SCHEDULE 3 OF 3 SHEET FOR NOTES.

| NO. | DATE | BY | REMARKS |
|---|---|---|---|
| | | | |

REVISIONS

Baker

UTAH DEPARTMENT OF TRANSPORTATION
SALT LAKE CITY, UTAH
STRUCTURES DIVISION

DESIGN MSA 12/04 CHECK AW 12/04 CHECK MSA 12/04 CHECK
DRAWN GCK 12/04 QUANT.

APPROVAL RECOMM. DATE DESIGN ENGR.
APPROVED FOR USE BY UDOT DATE UDOT BRIDGE ENGR.

I-15: UTAH COUNTY
U.P.R.R. & US-89 OVERPASS
REINFORCEMENT SCHEDULE 2OF3

PROJECT NUMBER SP-15-6(52)241

UTAH
COUNTY

C-343W2
DRG. NO.

SHT. 34 OF 35

REINFORCING

APPROACH SLABS

| MARK | SIZE | QTY | LENGTH | TOTAL | DIAGRAM |
|---|---|---|---|---|---|
| AS1 | 5 | 32 | 35′-6 | 1136′-0 | 35′-6 |
| AS2 | 5 | 17 | 32′-5 | 551′-1 | 32′-5 |
| AS3 | 7 | 28 | 32′-5 | 907′-8 | 32′-5 |
| AS4 | 7 | 3 | 35′-6 | 106′-6 | 35′-6 |
| AS5 | 5 | 32 | 35′-10 | 1146′-8 | 35′-10 |
| AS6 | 5 | 18 | 31′-3 | 562′-6 | 31′-3 |
| AS7 | 7 | 29 | 31′-3 | 906′-3 | 31′-3 |
| AS8 | 7 | 3 | 38′-0 | 114′-0 | 38′-0 |
| AS9 | 5 | 67 | 10′-1 | 675′-7 | 4′-6; 1′-1; 8″; 3′-6; 8″ |
| AS10 | 5 | 4 | 9′-6 | 38′-0 | 1′-6; 8′-0 |
| AS11 | 5 | 32 | 27′-3 | 872′-0 | 27′-3 |
| AS12 | 5 | 16 | 26′-9 | 428′-0 | 26′-9 |
| AS13 | 7 | 28 | 26′-9 | 749′-0 | 26′-9 |
| AS14 | 7 | 3 | 27′-3 | 81′-9 | 27′-3 |
| AS15 | 5 | 32 | 28′-3 | 904′-0 | 28′-3 |
| AS16 | 5 | 17 | 26′-1 | 443′-5 | 26′-1 |
| AS17 | 7 | 28 | 26′-1 | 730′-4 | 26′-1 |
| AS18 | 7 | 3 | 28′-9 | 86′-3 | 28′-9 |
| AS19 | 5 | 64 | 8′-11 | 570′-8 | 4′-0; 1′-1; 8″; 2′-10; 8″ |

| MARK | SIZE | QTY | LENGTH | TO |
|---|---|---|---|---|

DGN File: IP_PWPcdms1717\4433_C343-35_ReinfSch3of3.dgn

02-MAY-2005

G STEEL SCHEDULE

| TAL | DIAGRAM |
|---|---|

| | MARK | SIZE | QTY | LENGTH | TOTAL | DIAGRAM |
|---|---|---|---|---|---|---|

SUMMARY OF COATED BARS (FEET)

43597.83 FT OF NUMBER 4 BARS AT 0.668 LBS/FT = 29123.4 LBS

108806.20 FT OF NUMBER 5 BARS AT 1.043 LBS/FT = 113484.6 LBS

3049.17 FT OF NUMBER 6 BARS AT 1.502 LBS/FT = 4579.9 LBS

3681.75 FT OF NUMBER 7 BARS AT 2.044 LBS/FT = 7525.5 LBS

4234.33 FT OF NUMBER 8 BARS AT 2.670 LBS/FT = 11305.7 LBS

8639.33 FT OF NUMBER 9 BARS AT 3.400 LBS/FT = 29373.7 LBS

1978.00 FT OF NUMBER 10 BARS AT 4.303 LBS/FT = 8511.3 LBS

TOTAL = 203905 LBS

## NOTES

1. ALL BARS ARE COATED.
2. REINFORCING STEEL DIMENSIONS ARE OUT TO OUT OF BAR UNLESS OTHERWISE SPECIFIED.
3. SPLICES MAY BE OMITTED AT FABRICATORS OPTION. HOWEVER, IN SUCH CASE, FABRICATOR ASSUMES RESPONSIBILITY FOR FIT.

| NO. | DATE | BY | REMARKS |
|---|---|---|---|

REVISIONS

UTAH DEPARTMENT OF TRANSPORTATION
SALT LAKE CITY, UTAH
STRUCTURES DIVISION

Baker

DESIGN JPD 11/04 CHECK AW 12-04
DRAWN GCK 11/04 CHECK JPD 12/04
QUANT. JPD 01/05 CHECK MSA 01/05

APPROVAL RECOMM. DATE DESIGN ENGR.
APPROVED FOR USE BY UDOT DATE UDOT BRIDGE ENGR.

I-15: UTAH COUNTY
U.P.R.R. & US-89 OVERPASS
REINFORCEMENT SCHEDULE 3OF3

PROJECT NUMBER SP-15-6(52)241

UTAH
COUNTY

C-343W2
DRG. NO.

SHT. 35 OF 35

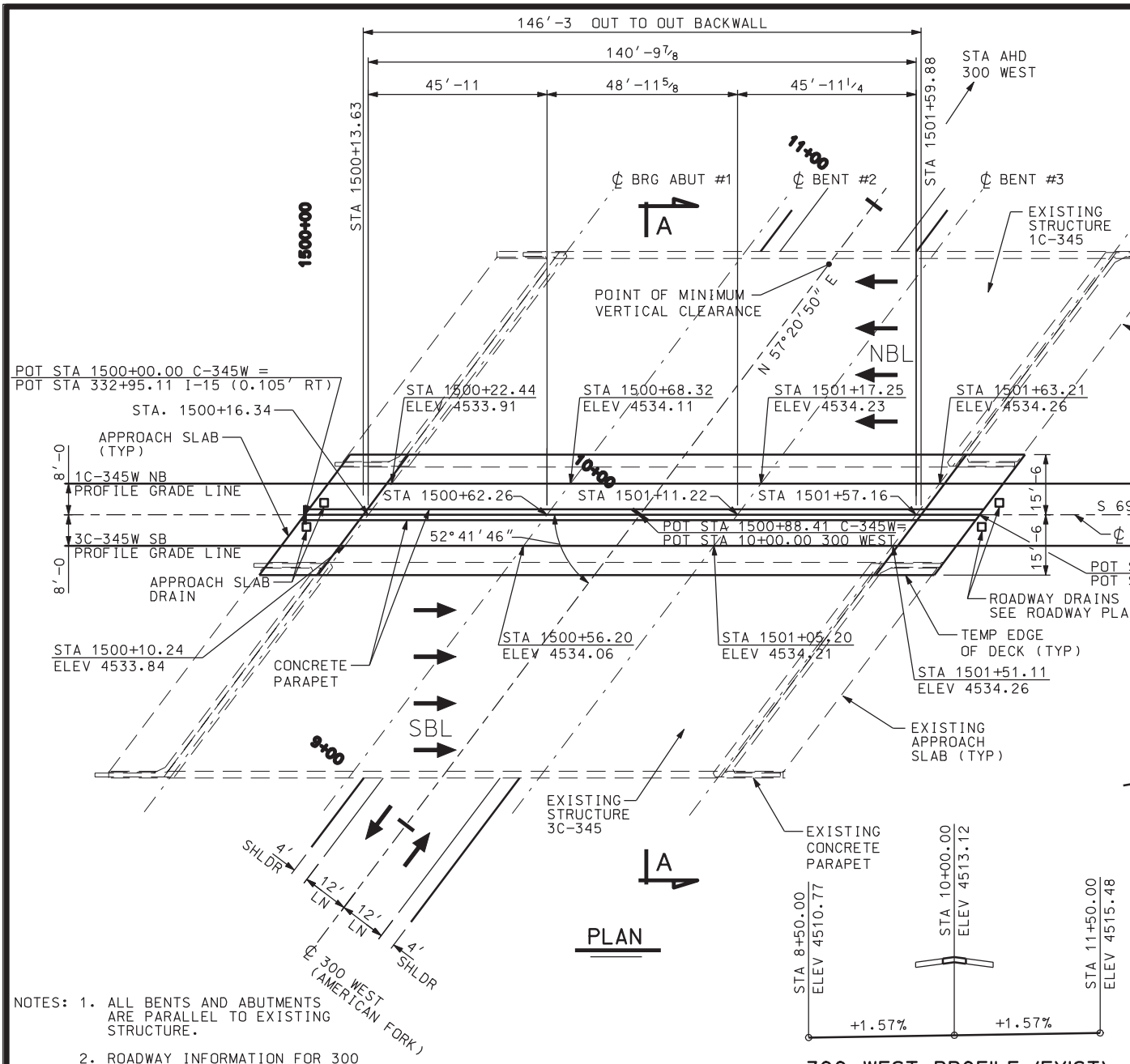


NOTES:
1. ALL BENTS AND ABUTMENTS ARE PARALLEL TO EXISTING STRUCTURE.
2. ROADWAY INFORMATION FOR 300 WEST IS BASED ON EXISTING BRIDGE C-345 PLAN SET.
3. SEE "UTILITIES PLAN" SHEET FOR UTILITIES LOCATION.

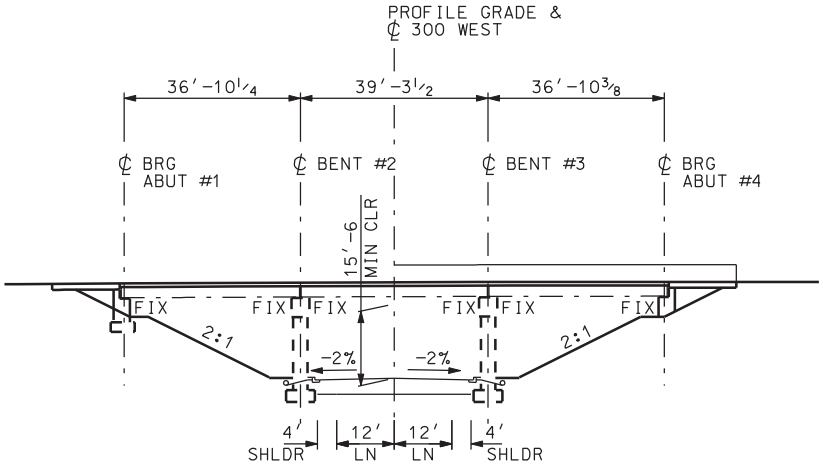


ELEVATION

NORMAL TO 300 WEST

## DESIGN

HL-93 LOADING IN ACCORDANCE WITH AA
BRIDGE DESIGN SPECIFICATIONS 3rd ED

INVENTORY AND OPERATING RATINGS FOR
AASHTO MANUAL FOR CONDITION ELEVATI
2001 AND 2003 INTERIM SPECIFICATION
OPERATING RATINGS FOR HL-93 ARE IN
CONDITION EVALUATION AND LOAD AND R
HIGHWAY BRIDGES.

| | |
|---|---|
| | OPERATING RA |
| EXISTING GIRDERS | (HS-20) 1. |
| | (HL-93) 1. |
| NEW GIRDERS | (HL-93) 1. |
| CAST-IN-PLACE CONCRETE: CLASS AA(AE) | f'c = 4.00 |
| STRUCTURAL STEEL: | Fy = 50 KS |
| WEARING SURFACE: | 6 1/2" ASPHA |
| DESIGN SPEED: | I-15 = 70 |
| SEISMIC: | SEISMIC DE (500 YR RE Ss = MAX S1 = MAX SITE CLASS |
| | EXISTING S MEET THE S |

DGN File: IP_PWP:dms1717\4433_C-345-01_SL.dgn

02-MAY-2005

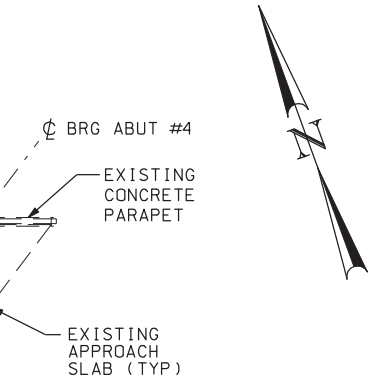


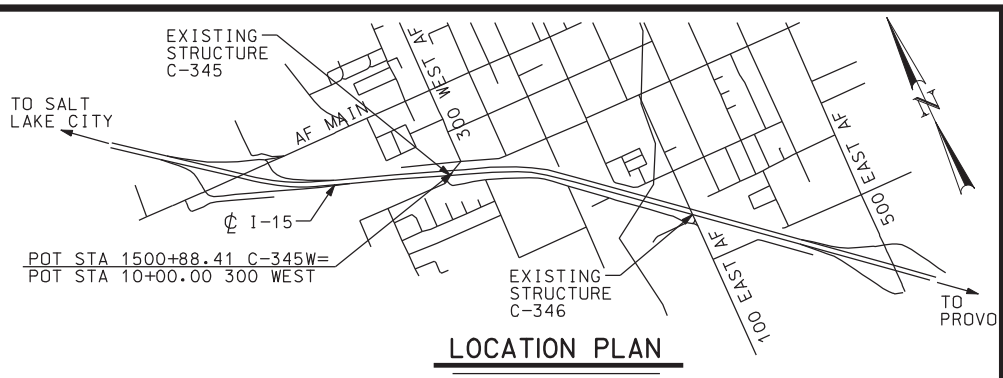


## LOCATION PLAN

## INDEX OF SHEETS


1. SITUATION & LAYOUT 1
2. SITUATION & LAYOUT 2
3. SOIL DATA SHEET 1
4. SOIL DATA SHEET 2
5. UTILITIES
6. FOUNDATION PLAN
7. ABUTMENT PLAN & ELEVATION
8. ABUTMENT DETAILS
9. BENT PLAN & ELEVATION
10. BENT DETAILS
11. BENT FOOTING DETAILS
12. FRAMING PLAN
13. GIRDER DETAILS
14. DIAPHRAGM DETAILS 1
15. DIAPHRAGM DETAILS 2
16. BEARING DETAILS
17. DECK SLAB PLAN
18. DECK SECTIONS
19. SCREED ELEVATIONS
20. PARAPET DETAILS
21. PARAPET END DETAILS
22. APPROACH SLAB DRAIN DETAILS
23. APPROACH SLAB PLAN
24. APPROACH SLAB DETAILS
25. REINFORCING STEEL SCHEDULE 1
26. REINFORCING STEEL SCHEDULE 2


9°57′24″ E

C-345W

STA 1501+73.50 C-345W =
STA 334+68.66 I-15 (0.100′ LT)

NS.

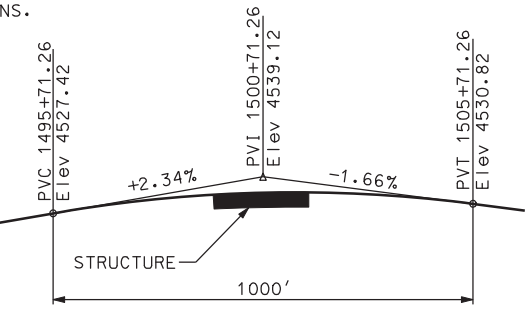


## C-345W PROFILE NB & SB

## GENERAL NOTES

1. USE COATED DEFORMED BILLET-STEEL BARS CONFORMING TO AASHTO M 284 OR M 111 AND M 31 GRADE 60 FOR ALL REINFORCING STEEL.
2. ALL STRUCTURAL STEEL WILL CONFORM TO AASHTO M 270 GRADE 50, EXCEPT WHERE NOTED OTHERWISE.
3. CHAMFER ALL EXPOSED CONCRETE CORNERS ¾″ EXCEPT WHERE NOTED OTHERWISE.
4. PROVIDE 2″ CONCRETE COVER TO REINFORCING STEEL EXCEPT WHERE NOTED OTHERWISE.
5. USE CLASS AA (AE) FOR CAST-IN-PLACE CONCRETE EXCEPT WHERE SPECIFIED OTHERWISE.
6. ALL NEW SUPERSTRUCTURE AND SUBSTRUCTURE ELEMENTS ARE DESIGNED TO MATCH LOCATION AND DIRECTION OF EXISTING ELEMENTS. FIELD VERIFY ALL CONTROLLING DIMENSIONS PRIOR TO CONSTRUCTION AND FABRICATION OF ANY MATERIALS. REPORT ANY DISCREPANCY BETWEEN THESE PLANS AND THE EXISTING STRUCTURE TO THE ENGINEER. DO NOT CONSTRUCT OR FABRICATE ANY ELEMENTS UNTIL THE DISCREPANCIES ARE RESOLVED. ALL STRUCTURE GEOMETRY IS BASED ON LOCAL SURVEY CONTROL POINTS SHOWN ON THE FOUNDATION PLAN. THE I-15 STATIONING AND ALIGNMENT IS FOR INFORMATION ONLY. ABUTMENT/PIER DIRECTIONS USED IN DESIGN ARE LISTED.
7. SEE EXISTING STRUCTURE C-345 PLANS FOR ADDITIONAL INFORMATION.
8. DO NOT SCALE DRAWINGS.
9. HORIZONTAL DIMENSIONS ARE PLAN. VERTICAL DIMENSIONS ARE PLUMB.
10. ALL DECK, APPROACH SLAB AND PROFILE GRADE ELEVATIONS ARE AT TOP OF CONCRETE.
11. CONTRACTOR WILL VERIFY RELATIVE ELEVATION DIFFERENCES BETWEEN C-345 AND C-345W AT BOTTOM OF NBL AND SBL INTERIOR MOST EXISTING BEAMS AT FRONT FACE OF ABUTMENT #1, SEE "DECK SECTIONS" SHEET. IF THE RELATIVE ELEVATION DIFFERENCES VARY BY MORE THAN 1″, CONTRACTOR WILL ADJUST ALL PLAN ELEVATIONS ACCORDINGLY AND SUBMIT TO THE ENGINEER FOR APPROVAL BEFORE MAKING ANY ADJUSTMENTS IN THE FIELD.

## I DATA

SHTO LRFD
ITION, 2004

HS20-44 ARE IN ACCORDANCE WITH THE
ON OF BRIDGES, 2nd EDITION, AND THE
S LOAD FACTOR METHOD. INVENTORY AND
ACCORDANCE WITH THE GUIDE MANUAL FOR
ESISTANCE FACTOR RATING (LRFR) OF

| TING | INVENTORY RATING |
|---|---|
| .77 | (HS-20) 1.06 |
| .15 | (HL-93) 0.89 |
| .65 | (HL-93) 1.27 |

00 PSI; fy (REINF) = 60 KSI

SI

LT (NOW), 0 PSF FWS

M.P.H.; 300 WEST = 40 M.P.H

ESIGN PARAMETERS
ETURN PERIOD, 10% PE IN 50 YR)
CONSIDERED EQ GROUND MOTION AT 0.2s = 0.46g
CONSIDERED EQ GROUND MOTION AT 1.0s = 0.16g
S D

STRUCTURE ELEMENTS DO NOT
SEISMIC DESIGN CRITERIA.

## QUANTITIES

| ITEM | EST | UNIT | AS CONST |
|---|---|---|---|
| GRANULAR BACKFILL BORROW (PLAN QUANTITY) | 209 | CU YD | |
| REINFORCING STEEL - COATED | 72,311 | LB | |
| STRUCTURAL CONCRETE (EST. QTY 377 C.Y.) | 1 | LUMP | |
| PREPARE BRIDGE FOR WIDENING | 1 | LUMP | |
| STRUCTURAL STEEL (EST. QTY 95,713 LBS) | 1 | LUMP | |

| NO. | DATE | BY | REMARKS |
|---|---|---|---|
| | | | |

REVISIONS

UTAH DEPARTMENT OF TRANSPORTATION
SALT LAKE CITY, UTAH
HDR ENGINEERING, INC.

DESIGN RDH 11/04 CHECK GCG 11/04
DRAWN JG 11/04 CHECK RDH 11/04
QUANT. RDH 11/04 CHECK GCG 11/04

APPROVAL RECOMM. DATE SENIOR DESIGN ENGR.
APPROVED FOR USE BY UDOT DATE UDOT BRIDGE ENGR.

I-15; CORRIDOR IN UTAH COUNTY
I-15 OVER 300 WEST IN AMERICAN FORK
SITUATION & LAYOUT 1

PROJECT NUMBER SP-15-6(52)241

UTAH
COUNTY

C-345W
DRG. NO.

SHT. 1 OF 26

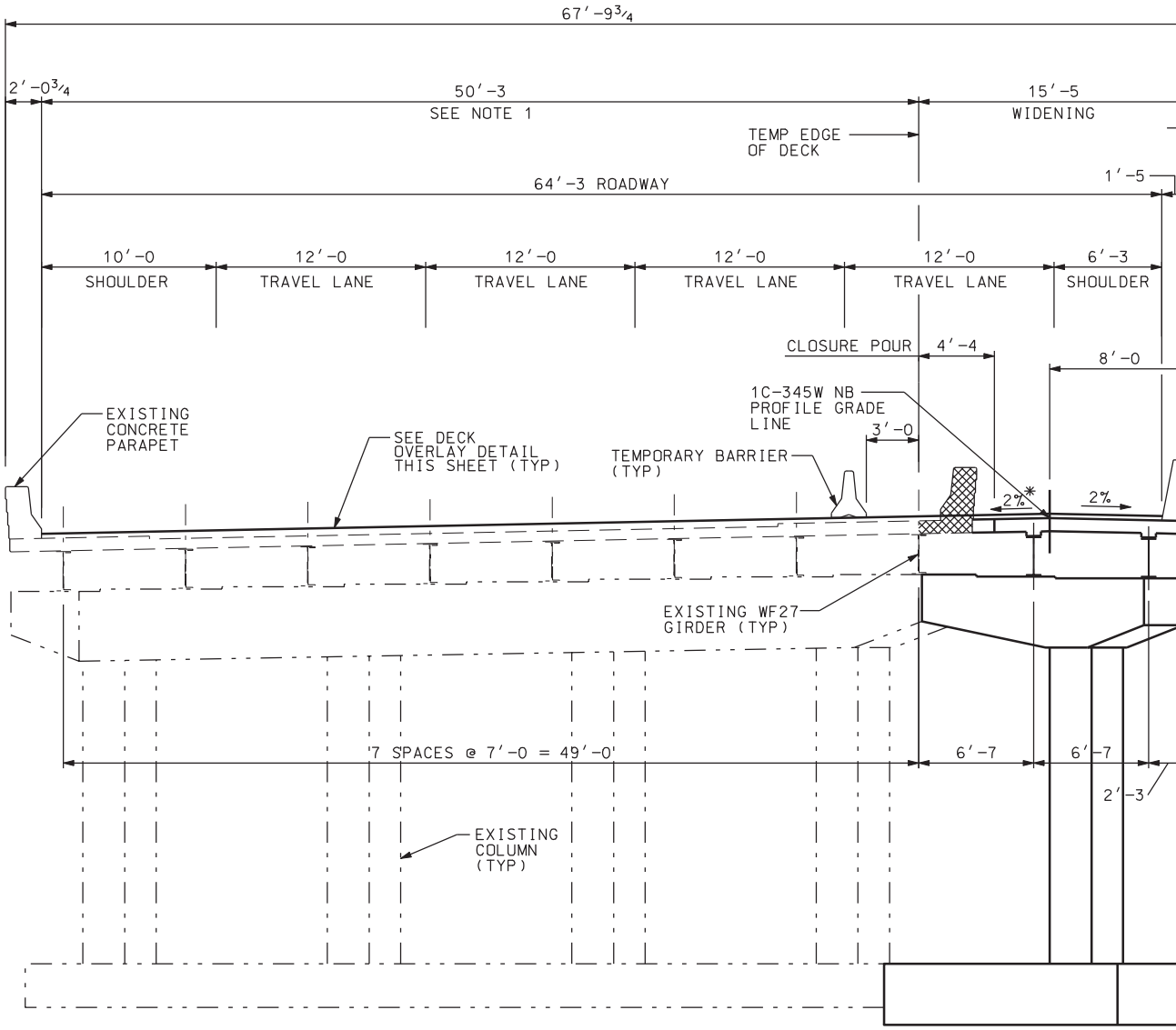


## SECTI

LOOKING
* ACTUAL CROSS
MATCH EXISTI

## NOTES

1. PARTIALLY REMOVE EXISTING ASPHALT SURFACING OVERLAY. SEE M-91 REHABILITATION DETAIL SHEETS.
2. APPLY WATERPROOFING MEMBRANE, PLACE 1″ OPEN GRADED SURFACE COURSE ON TOP OF 2″ HMA – ½ INCH. TOTAL THICKNESS = 3″. SEE DECK OVERLAY DETAIL AND M-91 SHEETS.
3. SEE M-91 SHEETS FOR LIMITS OF WATERPROOFING MEMBRANE, 2″ HMA – ½ INCH, AND 1″ OPEN GRADED SURFACE COURSE.
4. PROFILE GRADE LINE IS TAKEN AT TOP OF NEW CONCRETE DECK.
5. VERIFY DECK THICKNESS AT SAW CUT. DO NOT DAMAGE EXISTING GIRDER WHILE CUTTING DECK OR DURING CONCRETE REMOVAL.

DGN File: IP_PWP:dms1717\4433_C-345-02_SL.dgn
02-MAY-2005

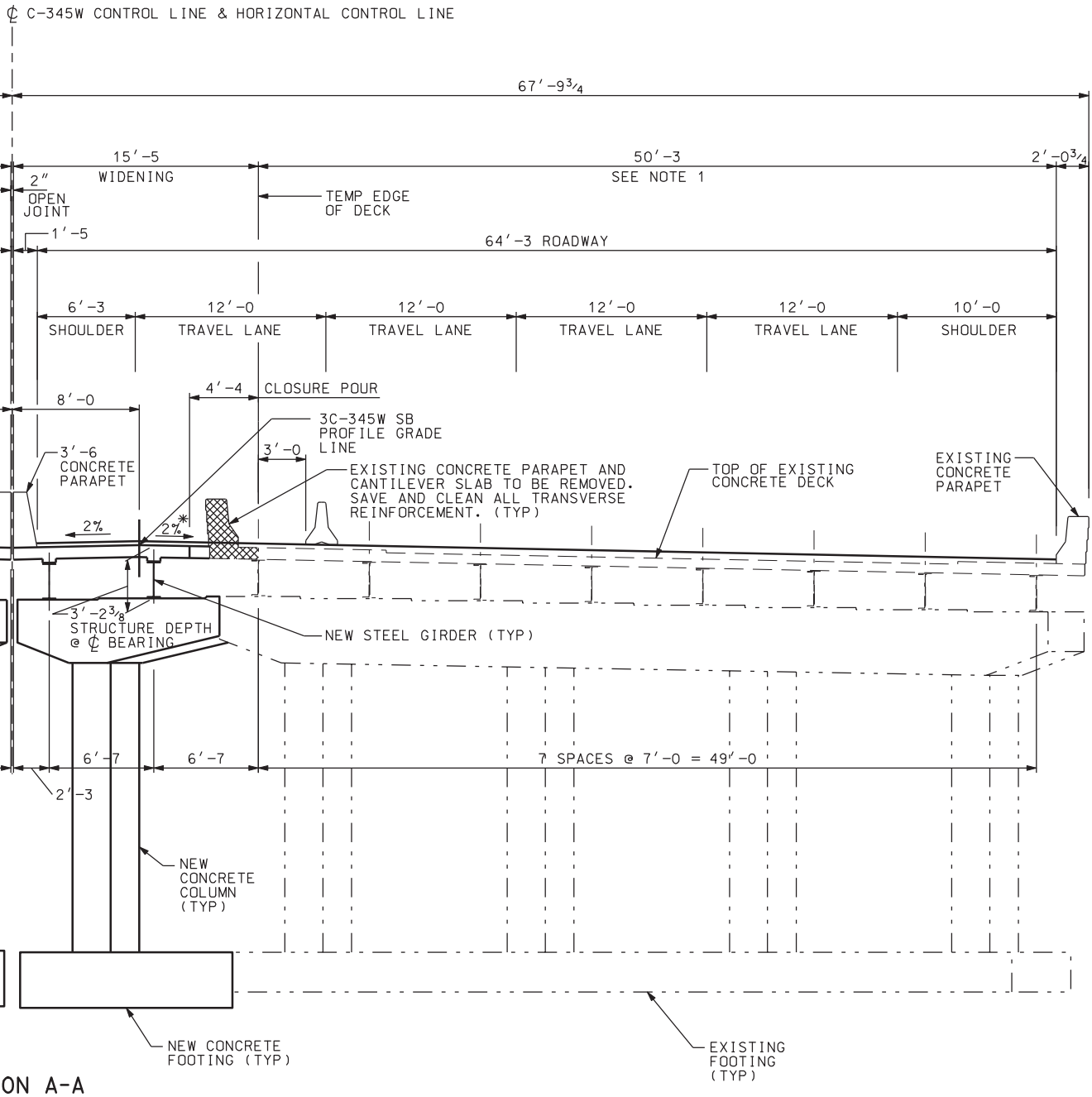


ON A-A

UP STATION
S SLOPE MAY VARY
ING CROSS SLOPE

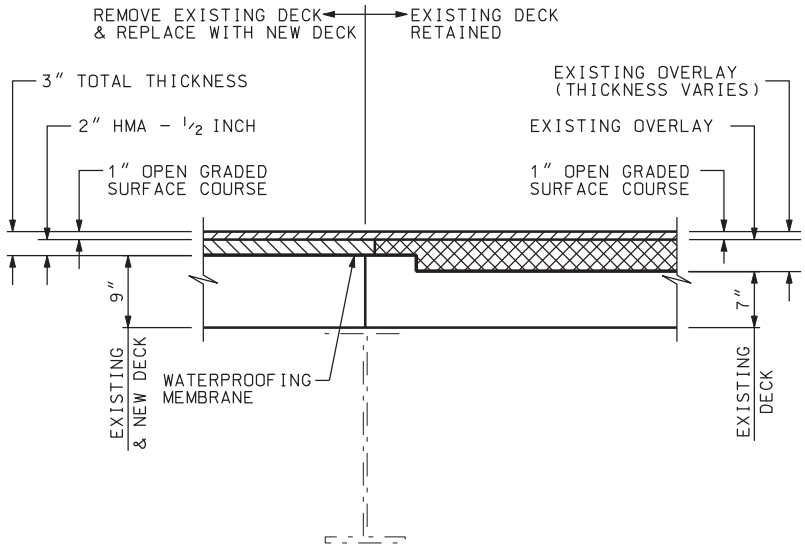


## DECK OVERLAY DETAIL

SEE NOTE 3

| NO. | DATE | BY | REMARKS |
|---|---|---|---|

REVISIONS

UTAH DEPARTMENT OF TRANSPORTATION
SALT LAKE CITY, UTAH
HDR ENGINEERING, INC.

DESIGN RDH 11/04 CHECK GCG 11/04
DRAWN JG 11/04 CHECK RDH 11/04
QUANT. RDH 11/04 CHECK GCG 11/04

APPROVAL RECOMM. DATE SENIOR DESIGN ENGR.
APPROVED FOR USE BY UDOT DATE UDOT BRIDGE ENGR.

I-15; CORRIDOR IN UTAH COUNTY
I-15 OVER 300 WEST IN AMERICAN FORK
SITUATION & LAYOUT 2

PROJECT NUMBER SP-15-6(52)241

UTAH
COUNTY

C-345W
DRG. NO.

SHT. 2 OF 26

# DRILL HOLE LOG

## BORING NO. 04-1

Sheet: 1 of 1

PROJECT: I-15, CORRIDOR IN UTAH COUNTY - STRUCTURE C345 PROJECT NO.: 200401.045
CLIENT: UTAH DEPARTMENT OF TRANSPORTATION DATE: 7/29/04 TO 7/30/04
LOCATION: SEE SITE PLAN: N 108668, E 189444 ELEVATION: 4513.2'
DRILLER: D. SAMPSON LOGGED BY: R.J., V.N.B.
EQUIP./DRILL METHOD: CME-55 / N.W. CASING TO 50' THEN DRILLING MUD
DEPTH TO WATER - INITIAL: ▽ N.M. AFTER 24 HOURS: ▽ 21.6'

| Elev. (Feet) | Depth (Feet) | Lithology | Sample Type | Rec. (In.) | Blows Per 6" & Torvane (tsf) | USCS (AASHTO) | Material Description | | Dry Density, pcf | Moisture Content, % | Atter. Liquid Limit, % | Atter. Plasticity Index, % | Gradation Gravel, % | Gradation Sand, % | Gradation Silt/Clay, % | Other Tests |
|---|---|---|---|---|---|---|---|---|---|---|---|---|---|---|---|---|
| | | | | 12 | 8,13,19 | GM | brown & gray, dry, med. dense, sulphur odor | SILTY GRAVEL W/SAND | | | | | | | | |
| 4510 | 5 | | | 12 | 11,26,26 | GP-GM (A-1-a) | brown, slightly moist, dense | POORLY GRADED GRAVEL W/SILT & SAND | | 5.8 | | NP | 49 | 42 | 9 | |
| 4505 | 10 | | | 7 | 16,19,18 | GP | black, wet, med. dense | POORLY GRADED GRAVEL | | | | | | | | |
| 4500 | 15 | | | 12 | 26,34,35 | GP-GM | brown, slightly moist, dense | | | | | | | | | |
| 4495 | 20 | | | 7 | 14,22,17 | GP-GM | brown, wet, med. dense | POORLY GRADED GRAVEL W/SILT & SAND | | | | | | | | |
| 4490 | 25 | | | 7 | 8,10,14 | GP-GM (A-1-a) | brown, wet, loose to med. dense | | | 8.2 | | NP | 76 | 18 | 6 | |
| 4485 | 30 | | | 11 | 8,8,8 | SM (A-3) | brown, wet, med. dense | | | 20.3 | | NP | 0 | 81 | 18 | DS |
| 4480 | 35 | | | 13 | 9,11,9 | SM (A-3) | brown, wet, med. dense, 0.75" silty clay layer | SILTY FINE TO MEDIUM SAND | | 22.3 | | NP | 1 | 82 | 17 | |
| 4475 | 40 | | | 15 | Pushed | SM | gray, wet, med. dense | SILTY FINE SAND | | | | | | | | |
| 4470 | | | | 16 | 10,11,11 0.84 | ML | gray, moist, stiff | | | | | | | | | |
| 4465 | 45 | | | 18 | 2,3,3 | ML (A-4(8)) | gray, very moist, firm | SILT | | 36.5 | 33 | 4 | 0 | 1 | 99 | |
| 4460 | 50 | | | 18 | Pushed 0.57 | CL | gray, moist, stiff | LEAN CLAY | | | | | | | | |
| 4455 | 55 | | | 18 | 0.38 2,6,7 0.77 | CL CL-ML | gray, firm; gray, moist, stiff | SILTY CLAY W/SAND LAYERS TO 0.75" THICK | | | | | | | | |
| 4450 | 60 | | | 16 | Pushed 0.88 | CL-ML | gray, slightly moist, stiff | | | | | | | | | |
| | | | | 24 | 4,4,5,6 0.60 | CL | gray, moist, stiff | | | | | | | | | |
| 4445 | 65 | | | 24 | 2,3,3,5 0.60 | CL | gray, moist, stiff | LEAN CLAY W/SOME SILTY SAND LENSES | | | | | | | | |
| | | | | | | | | SAND | | | | | | | | |
| 4440 | 70 | | | 18 | Pushed 0.56 | SC | gray, moist, stiff | SANDY CLAY | | | | | | | | |
| | | | | 24 | 10,14,25 | SM | gray, wet, dense | | | | | | | | | |
| 4435 | 75 | | | 21 | 19,30,31,30 | SM | gray, wet, very dense | SILTY SAND | | | | | | | | |
| | 80 | | | 24 | 10,10,9,14 1.00+ | CL,SM | gray, wet to moist, med. dense to very stiff | LAYERS OF CLAY & SILTY SAND | | | | | | | | |

DRILL HOLE

BORING NO.

Sheet: 1 of 1

POT STA 150
POT STA 10+

1C-345W NB
PROFILE LI

3C-345W SB
PROFILE LI

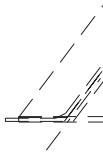

DGN File: IP_PWP:dms11717\4433_C-345-03.dgn

02-MAY-2005

LOG

04-2

PROJECT: I-15, CORRIDOR IN UTAH COUNTY - STRUCTURE C345 PROJECT NO.: 200401.045
CLIENT: UTAH DEPARTMENT OF TRANSPORTATION DATE: 7/23/04
LOCATION: SEE SITE PLAN: N 108698, E 189416 ELEVATION: 4512.9'
DRILLER: D. SAMPSON, K. WARD LOGGED BY: R.J., V.N.B.
EQUIP./DRILL METHOD: CME-55 / N.W. CASING
DEPTH TO WATER - INITIAL: ▽ N.M. AFTER 24 HOURS: ▽ 19.3'

| SAMPLE Type | Rec. (in.) | Blows Per 6" & Torvane (tsf) | USCS (AASHTO) | Material Description | | Dry Density, pcf | Moisture Content, % | Atter. Liquid Limit, % | Atter. Plasticity Index, % | Gradation Gravel, % | Gradation Sand, % | Gradation Silt/Clay, % | Other Tests |
|---|---|---|---|---|---|---|---|---|---|---|---|---|---|
| | 8 | 2,6,13 | GC/GM | brown-gray, slightly moist, loose | CLAYEY TO SILTY GRAVEL W/SAND | | | | | | | | |
| | 6 | 9,9,9 | GP-GM (A-1-a) | brown-gray, moist, loose | POORLY GRADED GRAVEL W/SAND & SILT | | 6.0 | | NP | 60 | 31 | 9 | |
| | 12 | 27,41,50 | GM | brown, wet, very dense | | | | | | | | | |
| | 8 | 7,7,7 | SM (A-2-4) | brown, wet, loose | | | | | | | | | |
| | | | | brown, moist, med. dense | SILTY SAND | | 14.0 | | NP | 5 | 61 | 34 | |
| | 12 | 22,39,37 | GM | brown, moist, very dense | SILTY GRAVEL W/SAND | | | | | | | | |
| | 8 | 37,56 | GP-GM (A-1-a) | brown & black, wet, very dense | | | 7.4 | | NP | 50 | 38 | 12 | |
| | 8 | 20,27,18 | GP-GM (A-1-a) | brown & white, wet, med. dense | POORLY GRADED GRAVEL W/SILT & SAND | | 4.8 | | NP | 72 | 21 | 7 | |
| | 5 | 8,10,14 | GP | brown & gray, wet, loose to med. dense | | | | | | | | | |
| | 6 | 7,7,7 | GP (A-1-a) | gray-brown, wet, very loose | POORLY GRADED GRAVEL sub-rounded to sub-angular | | 6.0 | | NP | 75 | 23 | 2 | |
| | 13 | 6,7,12 0.33 | SM | brown, wet, med. dense | SILTY SAND | | | | | | | | |
| | | | ML | brown, wet, firm | SANDY SILT | | | | | | | | |
| | | | SP | brown, wet, med. dense | FINE TO COARSE SAND | | | | | | | | |
| | 14 | 9,11,11 | SM | gray-brown, wet, med. dense | SILTY SAND | | | | | | | | |
| | | | SM/ML | gray, wet, med. dense, non-plastic | SILTY SAND TO SANDY SILT | | | | | | | | |
| | 18 | 1,3,3 0.62 | ML (A-4(8)) | gray, moist, stiff | SILT | | 33.7 | 33 | 5 | 0 | 0 | 100 | |

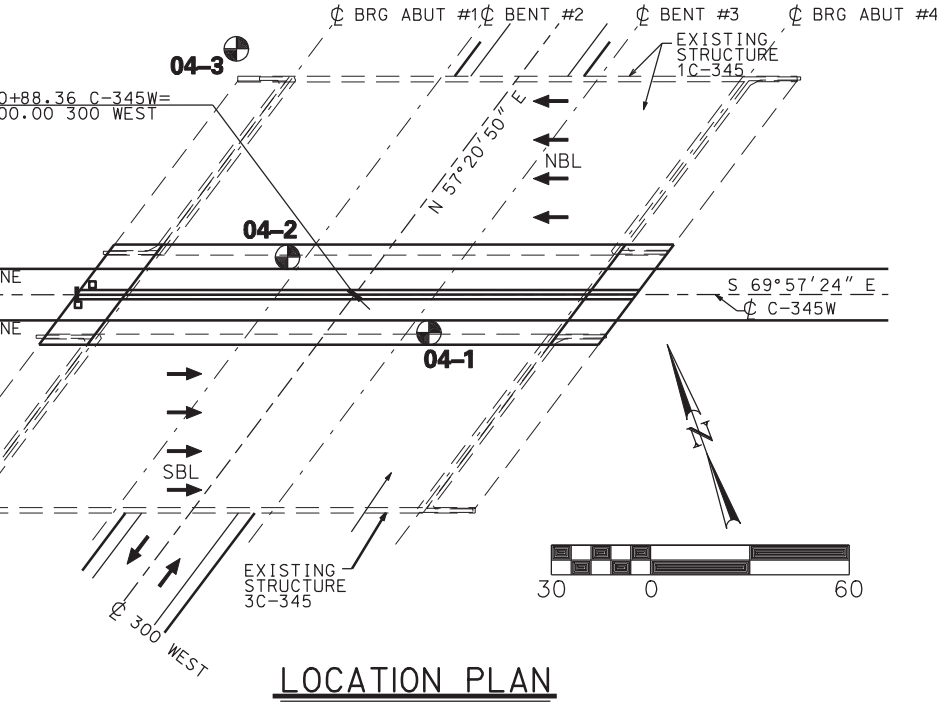


LOCATION PLAN

# KEY TO BORING LOG

## SYMBOLS

2,3,2 ← Blow Count per 6"
0.45 ← Torvane (tsf)
Disturbed Sample
Undisturbed Sample
Groundwater Elevation

UC = Unconfined Compression Test
CT = Consolidation Test
SG = Specific Gravity Test
DS = Direct Shear Test

## RELATIVE DENSITY (NON-PLASTIC - SAND & SILT)

VERY LOOSE N<4
LOOSE N 4-10
MED DENSE N 10-30
DENSE N 30-50
VERY DENSE N>50

## CONSISTENCY (PLASTIC - SILT & CLAY)

VERY SOFT N<2
SOFT N 2-4
MEDIUM STIFF N 4-8
STIFF N 8-15
VERY STIFF N 15-30
HARD N>30

## GENERAL NOTES

1. THE SUBSURFACE EXPLORATIONS SHOWN WERE CONDUCTED BETWEEN 07-23-04 AND 08-10-04 BY RB&G ENGINEERING, INC..
2. THESE BORING LOGS REPRESENT A SYNOPSIS OF THE SOIL DEPOSITS ENCOUNTERED WITHIN EACH BORING AND ARE BASED ON SOUND GEOLOGICAL AND ENGINEERING JUDGMENT. BECAUSE SOIL IS A COMPLEX MEDIUM, THESE BORING LOGS MAY OR MAY NOT REPRESENT THE SOIL CONDITIONS AT THIS SITE. THIS SUBSURFACE INTERPRETATION IS PRESENTED IN GOOD FAITH AND IS NOT INTENDED AS A SUBSTITUTE FOR PERSONAL INVESTIGATION AND JUDGEMENT OF THE CONTRACTOR.
3. THE WATER LEVELS AND CONDITIONS INDICATED ON THE BORING LOGS REPRESENT HOLE CONDITIONS ON THE DATE SHOWN, HOWEVER, IT SHOULD BE NOTED, THAT AT LOCATIONS AWAY FROM THE BORINGS OR AT ANOTHER TIME THE WATER LEVELS AND CONDITIONS MAY VARY SIGNIFICANTLY.
4. THE STRATIFICATION LINES REPRESENT THE APPROXIMATE BOUNDARIES BETWEEN SOIL TYPES AND THE TRANSITION MAY BE GRADUAL.
5. COBBLE - A ROCK WITH AN AVERAGE DIMENSION BETWEEN 3 INCHES AND 12 INCHES
6. BOULDER - A ROCK WITH AN AVERAGE DIMENSION OF 12 INCHES OR GREATER

NOTE: DRILL RIG USED - CME 55
HAMMER E=0.75

GEOTECHNICAL ENGINEER

| NO. | DATE | BY | REMARKS |
|---|---|---|---|
| | | | |

REVISIONS

UTAH DEPARTMENT OF TRANSPORTATION
SALT LAKE CITY, UTAH
STRUCTURES DIVISION
RB&G ENGINEERING INC.

DESIGN SRJ 7/04 CHECK VNB 10/04
DRAWN JPN 10/04 CHECK BEP 10/04
QUANT. CHECK

APPROVAL RECOMM. DATE SENIOR DESIGN ENGR.
APPROVED FOR USE BY UDOT DATE UDOT BRIDGE ENGR.

I-15; CORRIDOR IN UTAH COUNTY
I-15 OVER 300 WEST IN AMERICAN FORK
SOIL DATA SHEET 1

PROJECT NUMBER SP-15-6(52)241

UTAH
COUNTY

C-345W
DRG. NO.

SHT. 3 OF 26

# DRILL HOLE LOG

## BORING NO. 04-3

Sheet: 1 of 1

PROJECT: I-15, CORRIDOR IN UTAH COUNTY - STRUCTURE C345 PROJECT NO.: 200401.045
CLIENT: UTAH DEPARTMENT OF TRANSPORTATION DATE: 8/10/04
LOCATION: SEE SITE PLAN: N 108763, E 189428 ELEVATION: 4531.0'
DRILLER: D. SAMPSON, A. HARTVIGSEN LOGGED BY: M.H., V.N.B.
EQUIP./DRILL METHOD: CME-55 / N.W. CASING
DEPTH TO WATER - INITIAL: DRY AFTER 24 HOURS: NOT MEASURED

| Elev. (Feet) | Depth (Feet) | Lith-ology | SAMPLE Type | Rec. (In.) | Blows Per 6" & Torvane (tsf) | USCS (AASHTO) | Material Description | Dry Density, pcf | Moisture Content, % | Atter. Liquid Limit, % | Atter. Plasticity Index, % | Gradation Gravel, % | Gradation Sand, % | Gradation Silt/Clay, % | Other Tests |
|---|---|---|---|---|---|---|---|---|---|---|---|---|---|---|---|
| 4530 | | | | 14 | 3,3,4 | SM | brown, dry, loose — 3" SLAG — SILTY SAND W/GRAVEL (fill) | | | | | | | | |
| 4525 | 5 | | | 8 | 19,11,16 | GP-GM (A-1-a) | brown, dry, med. dense — POORLY GRADED GRAVEL W/SAND & SILT (fill) | | 10.9 | | NP | 64 | 27 | 9 | |
| 4520 | 10 | | | 9 | 11,21,25 | GP-GM | gray, dry, med. dense, some slag | | | | | | | | |
| | | | | 11 | 25,35,24 | SP-SM | gray, dry, very dense — POORLY GRADED SAND W/GRAVEL, SILT & SLAG (fill) sulphur odor from slag when drilling | | | | | | | | |
| 4515 | 15 | | | 12 | 17,14,12 | GP-GM (A-1-a) | gray, dry, loose — POORLY GRADED GRAVEL W/SAND, SILT & SLAG (fill) | | 12.5 | | NP | 55 | 38 | 7 | |
| 4510 | 20 | | | 11 | 9,20,22 | GP-GM | brown, dry, med. dense | | | | | | | | |
| | | | | 12 | 11,19,20 | GP-GM (A-1-a) | brown, moist, med. dense | | 7.2 | | NP | 52 | 41 | 7 | |
| 4505 | 25 | | | 9 | 20,43,35 | GP-GM | gray-brown, moist, dense — POORLY GRADED GRAVEL W/SILT & SAND | | | | | | | | |
| | | | | 10 | 18,19,19 | GP-GM | gray-brown, moist to wet, med. dense | | | | | | | | |
| 4500 | 30 | | | 9 | 15,18,37 | GP-GM | gray-brown, moist to wet, dense | | | | | | | | |

DGN File: IP_PWP:dms11717\4433_C-345-04.dgn
02-MAY-2005

# KEY TO BORING LOG

## SYMBOLS

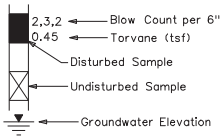


UC = Unconfined Compression Test
CT = Consolidation Test
SG = Specific Gravity Test
DS = Direct Shear Test

## RELATIVE DENSITY (NON-PLASTIC - SAND & SILT)

VERY LOOSE N<4
LOOSE N 4-10
MED DENSE N 10-30
DENSE N 30-50
VERY DENSE N>50

## CONSISTENCY (PLASTIC - SILT & CLAY)

VERY SOFT N<2
SOFT N 2-4
MEDIUM STIFF N 4-8
STIFF N 8-15
VERY STIFF N 15-30
HARD N>30

## GENERAL NOTES

1. THE SUBSURFACE EXPLORATIONS SHOWN WERE CONDUCTED BETWEEN 07-23-04 AND 08-10-04 BY RB&G ENGINEERING, INC..
2. THESE BORING LOGS REPRESENT A SYNOPSIS OF THE SOIL DEPOSITS ENCOUNTERED WITHIN EACH BORING AND ARE BASED ON SOUND GEOLOGICAL AND ENGINEERING JUDGMENT. BECAUSE SOIL IS A COMPLEX MEDIUM, THESE BORING LOGS MAY OR MAY NOT REPRESENT THE SOIL CONDITIONS AT THIS SITE. THIS SUBSURFACE INTERPRETATION IS PRESENTED IN GOOD FAITH AND IS NOT INTENDED AS A SUBSTITUTE FOR PERSONAL INVESTIGATION AND JUDGEMENT OF THE CONTRACTOR.
3. THE WATER LEVELS AND CONDITIONS INDICATED ON THE BORING LOGS REPRESENT HOLE CONDITIONS ON THE DATE SHOWN, HOWEVER, IT SHOULD BE NOTED, THAT AT LOCATIONS AWAY FROM THE BORINGS OR AT ANOTHER TIME THE WATER LEVELS AND CONDITIONS MAY VARY SIGNIFICANTLY.
4. THE STRATIFICATION LINES REPRESENT THE APPROXIMATE BOUNDARIES BETWEEN SOIL TYPES AND THE TRANSITION MAY BE GRADUAL.
5. COBBLE - A ROCK WITH AN AVERAGE DIMENSION BETWEEN 3 INCHES AND 12 INCHES
6. BOULDER - A ROCK WITH AN AVERAGE DIMENSION OF 12 INCHES OR GREATER

NOTE: DRILL RIG USED - CME 55
HAMMER E=0.75

GEOTECHNICAL ENGINEER

| NO. | DATE | BY | REMARKS |
|---|---|---|---|

REVISIONS

UTAH DEPARTMENT OF TRANSPORTATION
SALT LAKE CITY, UTAH
STRUCTURES DIVISION
RB&G ENGINEERING INC.

DESIGN MNH 8/04 CHECK VNB 10/04
DRAWN JPN 10/04 CHECK BEP 10/04
QUANT. CHECK

APPROVAL RECOMM. DATE SENIOR DESIGN ENGR.
APPROVED FOR USE BY UDOT DATE UDOT BRIDGE ENGR.

I-15; CORRIDOR IN UTAH COUNTY
I-15 OVER 300 WEST IN AMERICAN FORK
SOIL DATA SHEET 2
PROJECT NUMBER SP-15-6(52)241

UTAH
COUNTY
C-345W
DRG. NO.
SHT. 4 OF 26

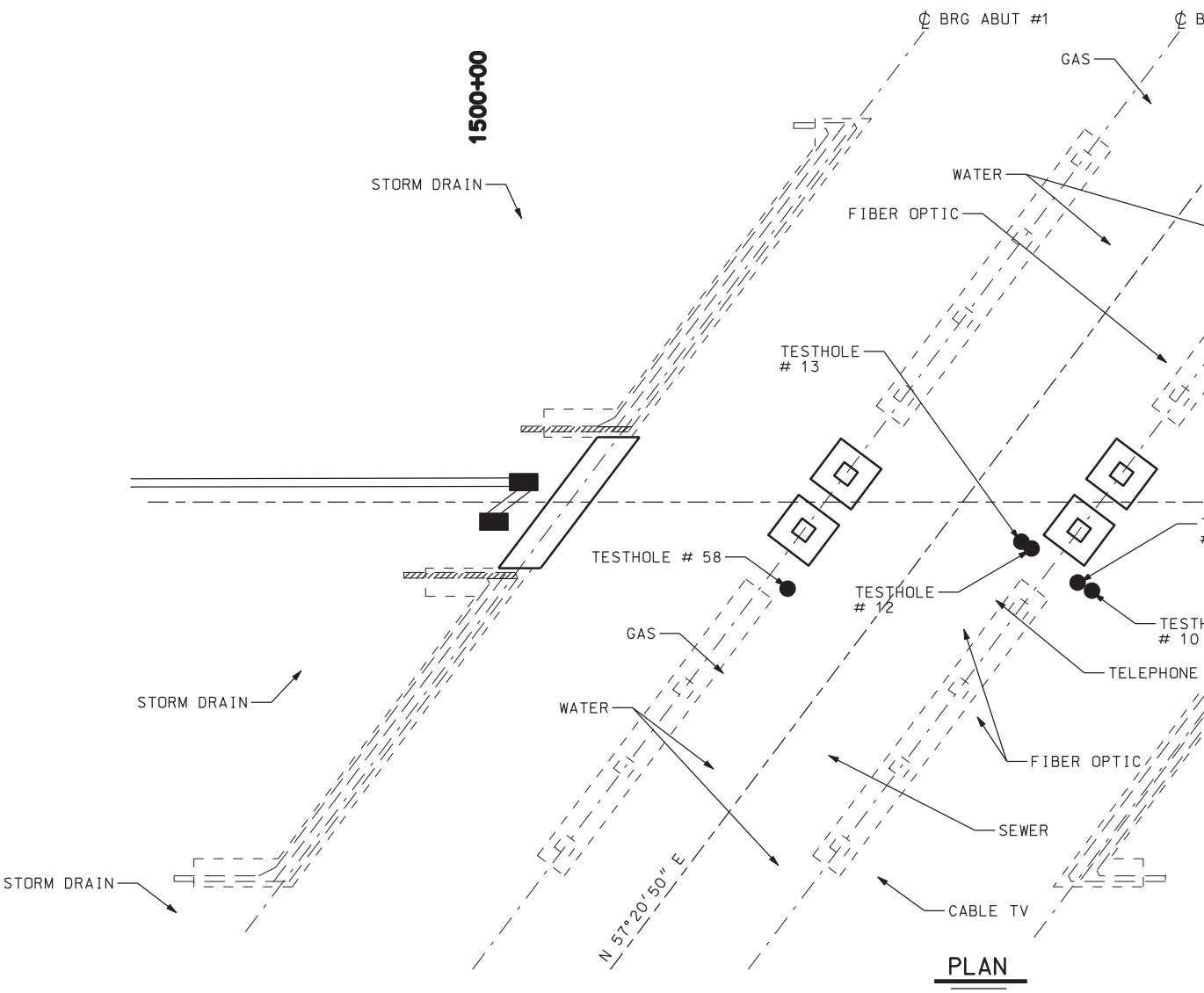


PLAN

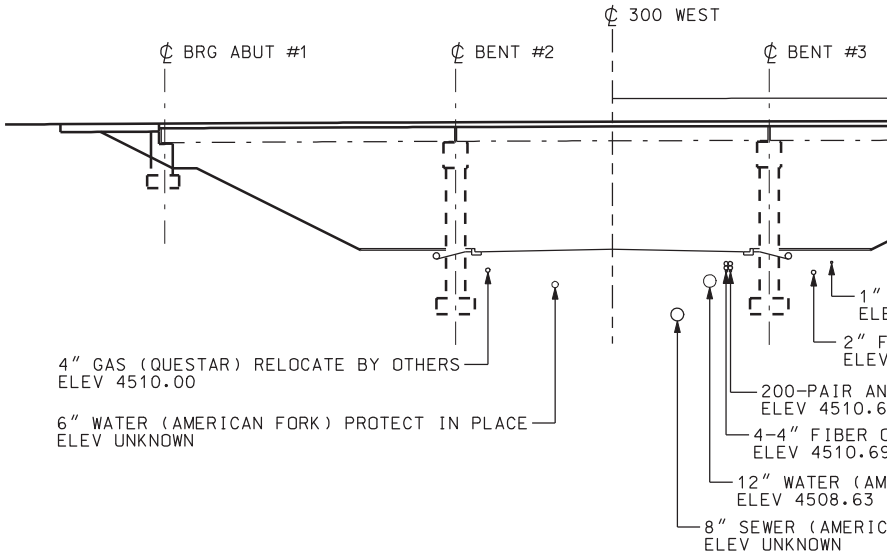


ELEVATION

TAKEN AT ℄ C-345W

DGN File: IP_PWP:dms1717\4433_C-345-05_UTIL01.dgn

02-MAY-2005

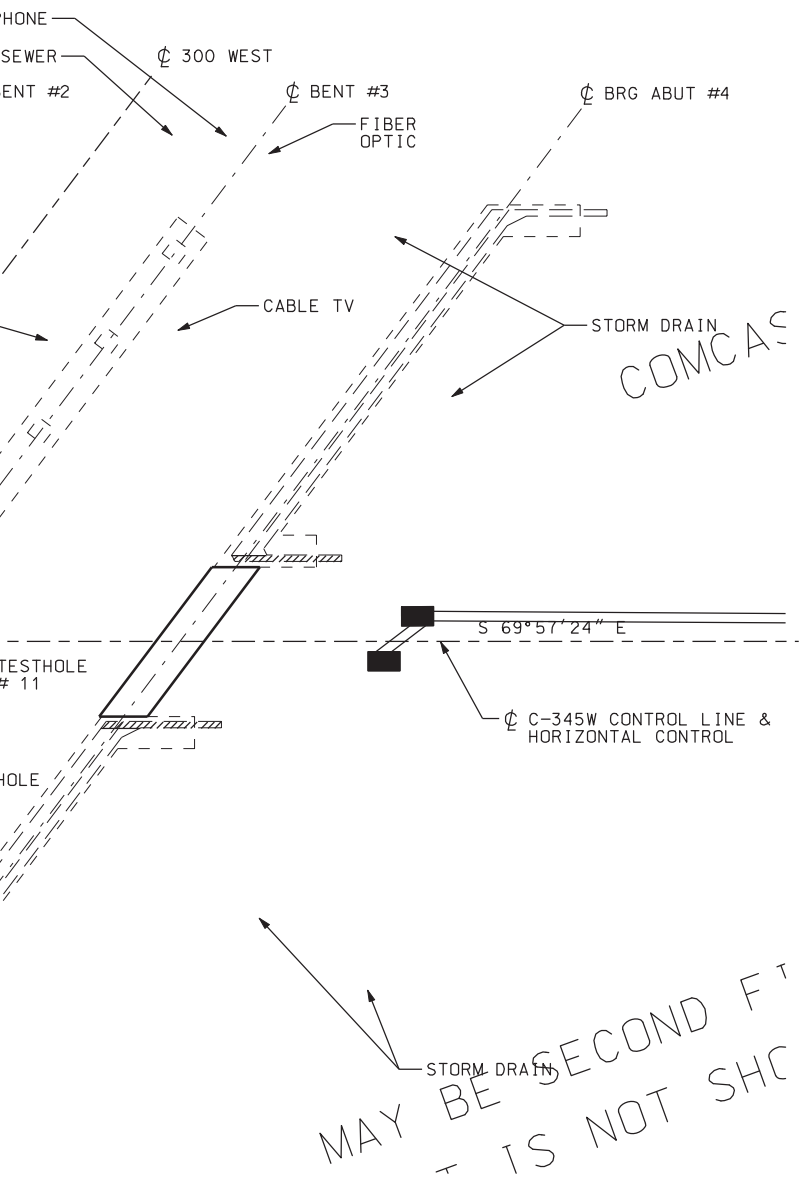


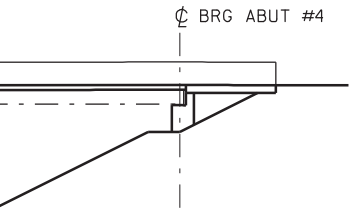


CABLE TV (COMCAST) RELOCATE BY OTHERS
EV 4511.14

IBER OPTIC (AMERICAN FORK) RELOCATE/PROTECT IN PLACE
4509.66

D 300-PAIR - TELEPHONE (QWEST) RELOCATE BY OTHERS
9

OPTIC (QWEST) RELOCATE BY OTHERS
9

ERICAN FORK) RELOCATE/PROTECT IN PLACE

AN FORK) PROTECT IN PLACE

## LEGEND

| | |
|---|---|
| g | EXISTING BURIED GAS |
| sd | EXISTING STORM DRAIN |
| wtr | EXISTING WATER |
| bctv | EXISTING BURIED CABLE |
| swr | EXISTING SEWER |
| btel | EXISTING BURIED TELEPHONE |
| fo | EXISTING FIBER OPTICS |

## NOTES

1. SEE ROADWAY DRAWINGS FOR UTILITY CONTACT LIST.
2. ELEVATIONS SHOWN ARE AT TOP OF UTILITY CONDUIT OR PIPING AND ARE ONLY VALID AT TESTHOLE LOCATIONS. ACTUAL LOCATIONS AND ELEVATIONS MAY VARY. UNDETERMINED ELEVATIONS ARE LABELED AS UNKNOWN. VERIFY ACTUAL ELEVATIONS OF THESE UTILTIES ONLY AS NECESSARY.
3. PROTECT IN PLACE ALL UTILITIES LABELED AS SUCH. REPAIR OR REPLACE DISTURBED OR DAMAGED UTILITIES AT THE DISCRETION OF THE UTILITY OWNER AT NO COST TO THE DEPARTMENT.
4. UTILITIES DESIGNATED AS "RELOCATE" ARE THE DESIGN-BUILD RESPONSIBILITY OF THE CONTRACTOR. REFER TO UTILITY RELOCATION (DESIGN-BUILD) SPECIFICATION 000728S.
5. SEE UT-7 FOR UTILITY DATA NOT SHOWN.

| NO. | DATE | BY | REMARKS |
|---|---|---|---|

REVISIONS

UTAH DEPARTMENT OF TRANSPORTATION
SALT LAKE CITY, UTAH
HDR ENGINEERING, INC.

DESIGN RDH 11/04 CHECK GCG 11/04
DRAWN JG 11/04 CHECK RDH 11/04
QUANT. RDH 11/04 CHECK GCG 11/04

APPROVAL RECOMM. DATE SENIOR DESIGN ENGR.
APPROVED FOR USE BY UDOT DATE UDOT BRIDGE ENGR.

I-15; CORRIDOR IN UTAH COUNTY
I-15 OVER 300 WEST IN AMERICAN FORK
UTILITIES

PROJECT NUMBER SP-15-6(52)241

UTAH
COUNTY

C-345W
DRG. NO.

SHT. 5 OF 26

| CONTROL POINT DATA | | | |
|---|---|---|---|
| CP # | COORDINATES | | ELEVATION |
| | NORTHING | EASTING | |
| C-345 N | 108828.215 | 189606.266 | 4516.702 |
| C-345 S | 108543.181 | 189263.534 | 4510.689 |
| C-345 NBL | 108760.213 | 189419.109 | 4532.873 |
| PT #1 | 108712.937 | 189348.759 | N/A |
| PT #2 | 108653.471 | 189511.756 | N/A |

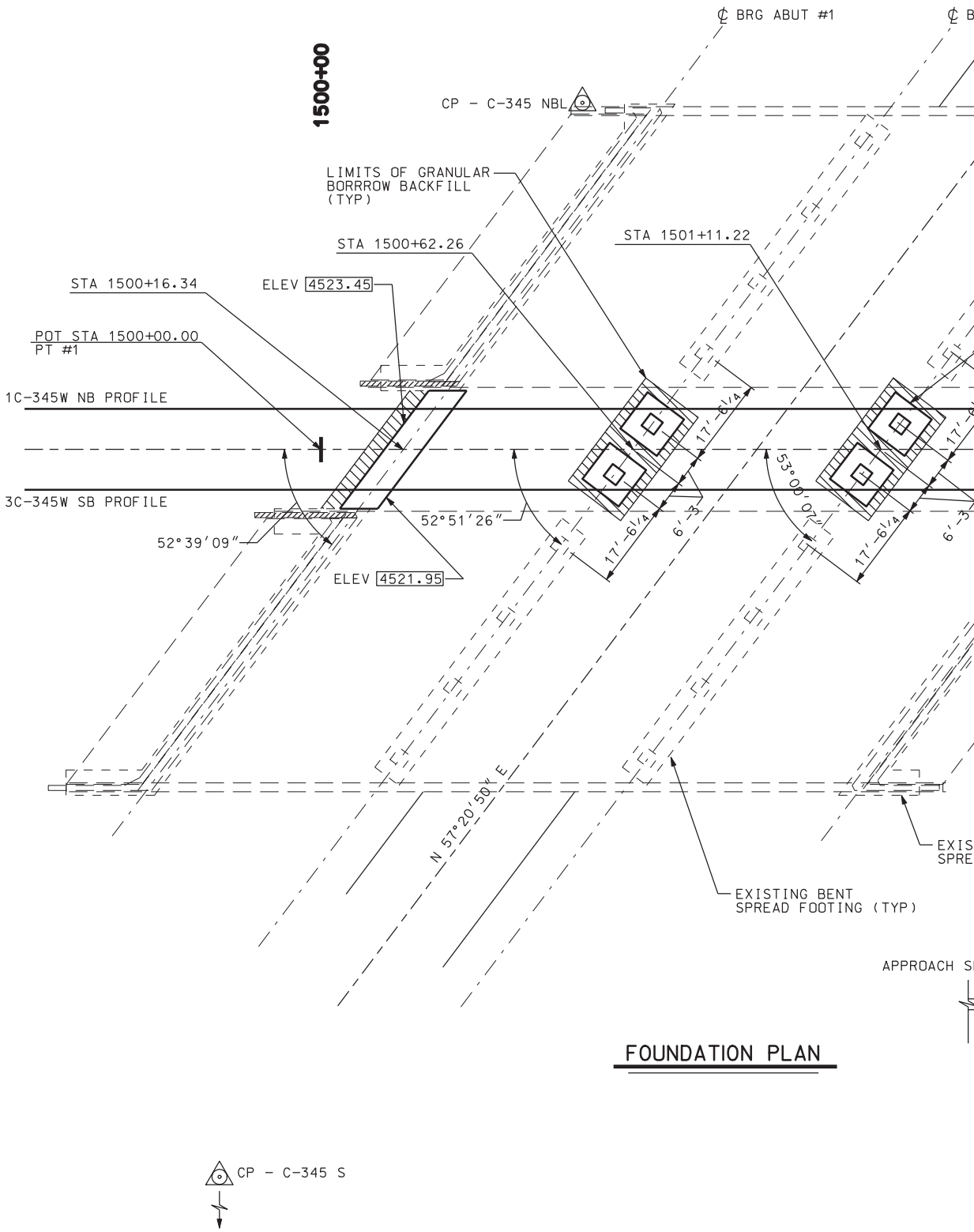


## FOUNDATION PLAN

DGN File: IP_PWP:dms1717\4433_C-345-06_FOUN01.dgn

02-MAY-2005

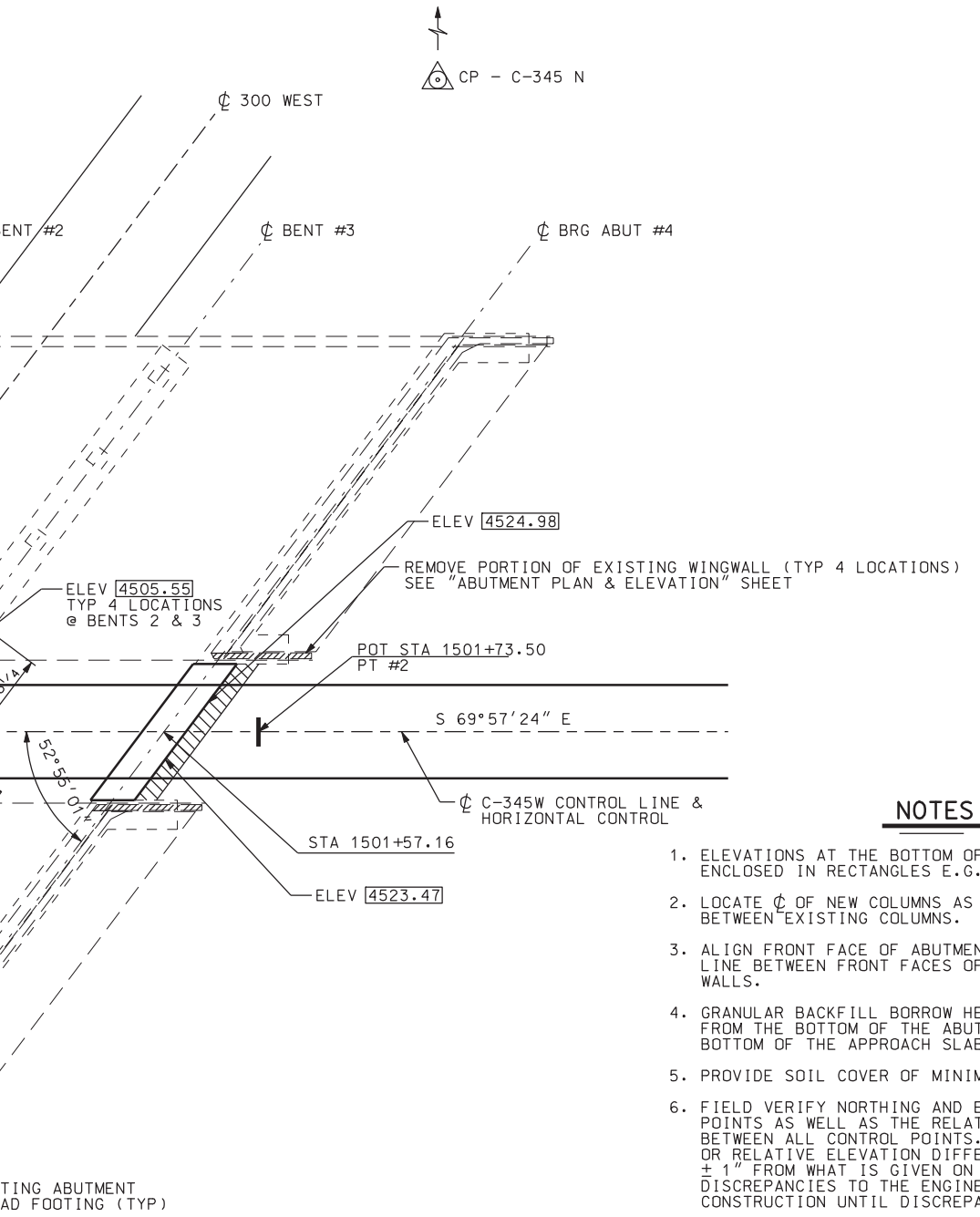


## NOTES

1. ELEVATIONS AT THE BOTTOM OF FOOTING ARE SHOWN ENCLOSED IN RECTANGLES E.G. 4338.64 .
2. LOCATE ℄ OF NEW COLUMNS AS THE "BEST FIT" LINE BETWEEN EXISTING COLUMNS.
3. ALIGN FRONT FACE OF ABUTMENT WALL ON THE "BEST FIT" LINE BETWEEN FRONT FACES OF THE EXISTING ABUTMENT WALLS.
4. GRANULAR BACKFILL BORROW HEIGHT IS COMPUTED FROM THE BOTTOM OF THE ABUTMENT TO THE BOTTOM OF THE APPROACH SLAB.
5. PROVIDE SOIL COVER OF MINIMUM 2'-0 FOR ALL FOOTINGS.
6. FIELD VERIFY NORTHING AND EASTING OF ALL CONTROL POINTS AS WELL AS THE RELATIVE ELEVATION DIFFERENCES BETWEEN ALL CONTROL POINTS. IF THE NORTHING, EASTING OR RELATIVE ELEVATION DIFFERENCES VARY BY MORE THAN ± 1" FROM WHAT IS GIVEN ON THIS SHEET, REPORT DISCREPANCIES TO THE ENGINEER AND STOP ALL CONSTRUCTION UNTIL DISCREPANCIES ARE RESOLVED.
7. FOR SPREAD FOOTINGS ON EXISTING SUBGRADE MATERIAL, SCARIFY THE UPPER 10 INCHES BELOW THE FOOTING ELEVATION, MOISTURE CONDITION, AND RECOMPACT TO AT LEAST 96% OF THE MAXIMUM LABORATORY DENSITY AS REQUIRED BY UDOT STANDARD SPECIFICATION SECTION 02324.
8. BOTTOM OF FOOTING ELEVATIONS ARE SHOWN AS REFERENCE. BOTTOM OF NEW ABUTMENT FOOTINGS ARE LOCATED 6 INCHES BELOW BOTTOM OF EXISTING ABUTMENT FOOTINGS.

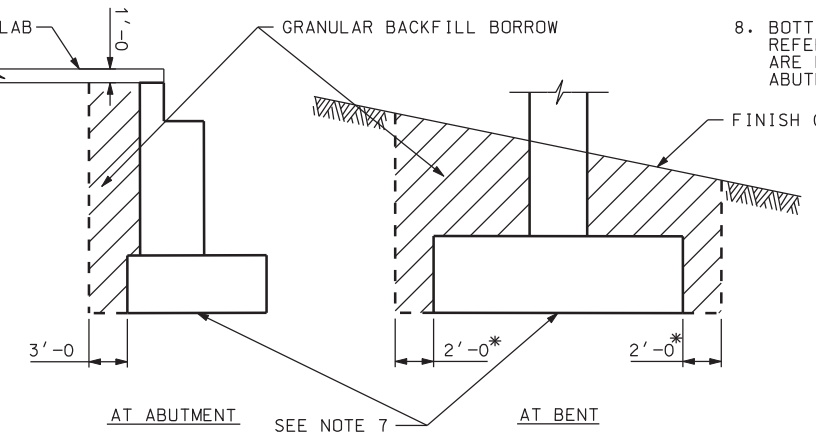


## LIMITS OF GRANULAR BACKFILL BORROW

* ALL SIDES OF BENT FOOTINGS.

| NO. | DATE | BY | REMARKS |
|---|---|---|---|
| | | | |

REVISIONS

UTAH DEPARTMENT OF TRANSPORTATION
SALT LAKE CITY, UTAH
HDR ENGINEERING, INC.

DESIGN RDH 11/04 CHECK GCG 11/04
DRAWN JG 11/04 CHECK RDH 11/04
QUANT. RDH 11/04 CHECK GCG 11/04

APPROVAL RECOMM. DATE SENIOR DESIGN ENGR.
APPROVED FOR USE BY UDOT DATE UDOT BRIDGE ENGR.

I-15; CORRIDOR IN UTAH COUNTY
I-15 OVER 300 WEST IN AMERICAN FORK
FOUNDATION PLAN
PROJECT NUMBER SP-15-6(52)241

UTAH
COUNTY

C-345W
DRG. NO.

SHT. 6 OF 26

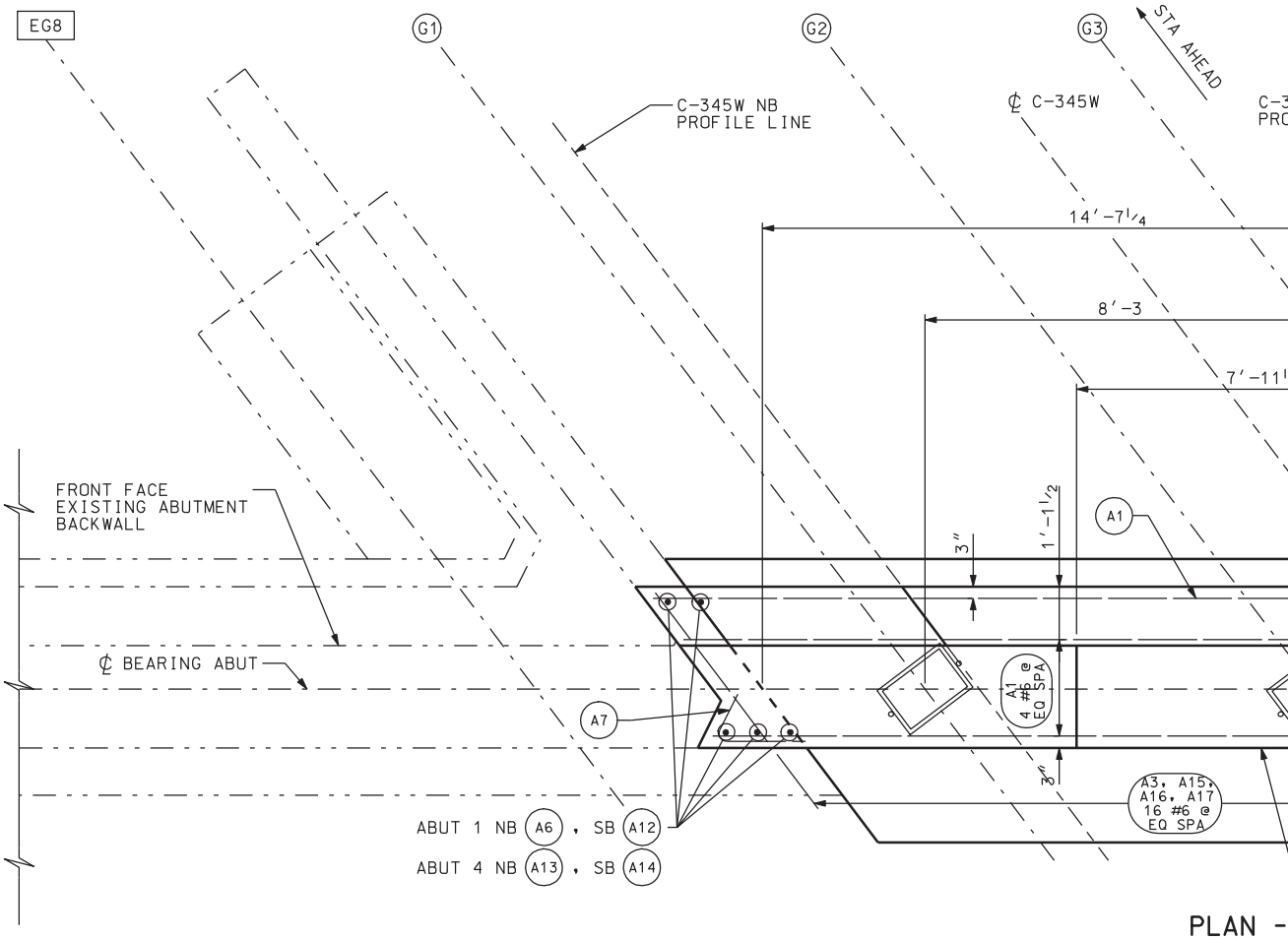


## PLAN -

ABUTMENT 4 SHOWN, ABUT
SHOWN FOR SOUTH WIDENI
REINFORCEMENT SHOWN FO
SIMILAR. BACKWALL REIN

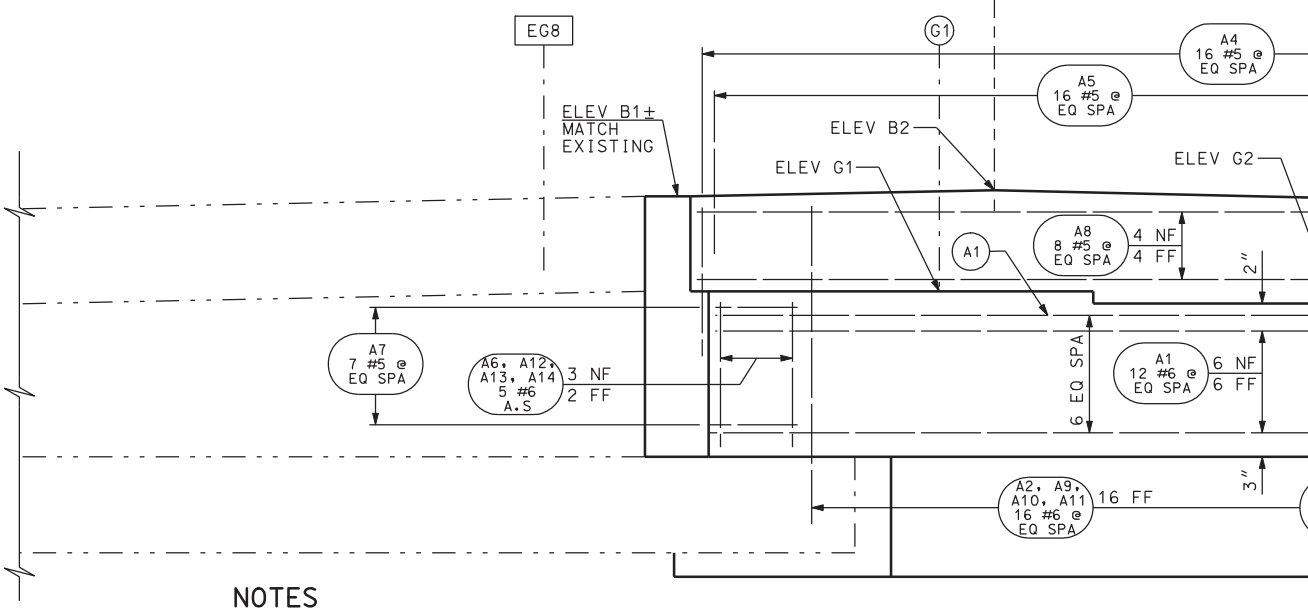


## NOTES

1. FOR SECTIONS AND DETAILS, SEE "ABUTMENT DETAILS" SHEET.
2. FOR BOTTOM OF FOOTING ELEVATIONS, SEE "FOUNDATION PLAN".
3. FOR BEARING AND ANCHOR BOLT DETAILS, SEE "BEARING DETAILS".
4. NF INDICATES NEAR FACE; FF INDICATES FAR FACE.
5. PROVIDE BEARING PEDESTAL 1′-8 × 1′-2 AT EACH BEARING LOCATION. FINISH THE CONCRETE HIGH. RUB OR GRIND THE PEDESTAL SMOOTH AND LEVEL TO THE SPECIFIED HEIGHT.
6. ELEVATIONS G1, G2, G3, AND G4 ARE AT ℄ OF BEARINGS. ELEVATIONS B1, B2, B3, B4, AND B5 ARE AT FRONT FACE OF BACKWALL.

## ELEVATION - ABUTMEN

WALL REINFORCING SHOWN FOR NORTH
SOUTH WIDENING SIMILAR.

### ELEVATION SCHED

| | ELEV G1 | ELEV G2 | ELEV G3 | ELEV |
|---|---|---|---|---|
| ABUT #1 | 4530.40 | 4530.27 | 4530.26 | 4530. |
| ABUT #4 | 4530.76 | 4530.66 | 4530.66 | 4530. |

DGN File: IP_PWP:dms1717\4433_C-345-07_ABUT01.dgn
02-MAY-2005

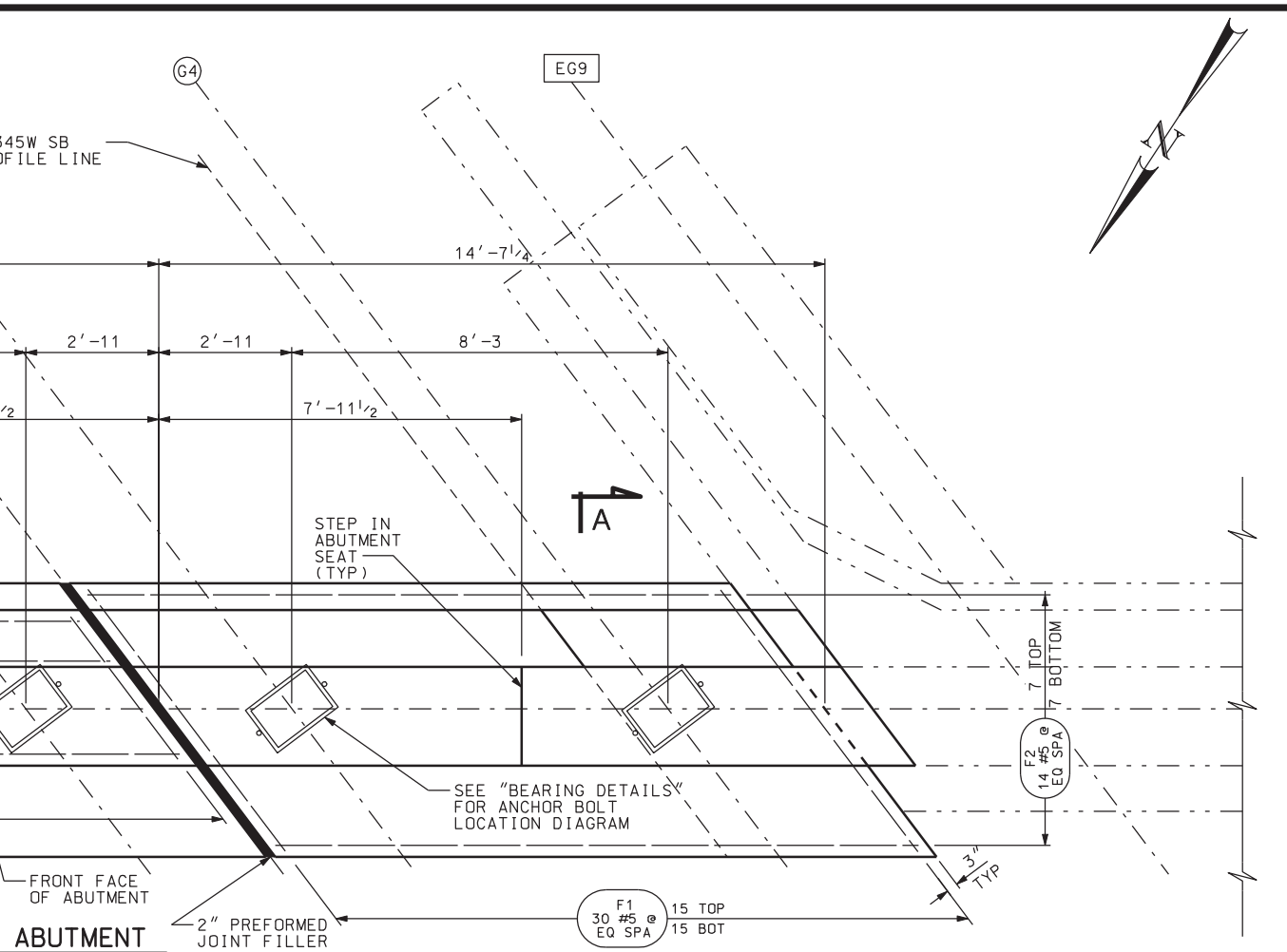


## ABUTMENT

MENT 1 SIMILAR. FOOTING REINFORCEMENT
NG, NORTH WIDENING SIMILAR. ABUTMENT
R NORTH WIDENING, SOUTH WIDENING
FORCEMENT NOT SHOWN FOR CLARITY.

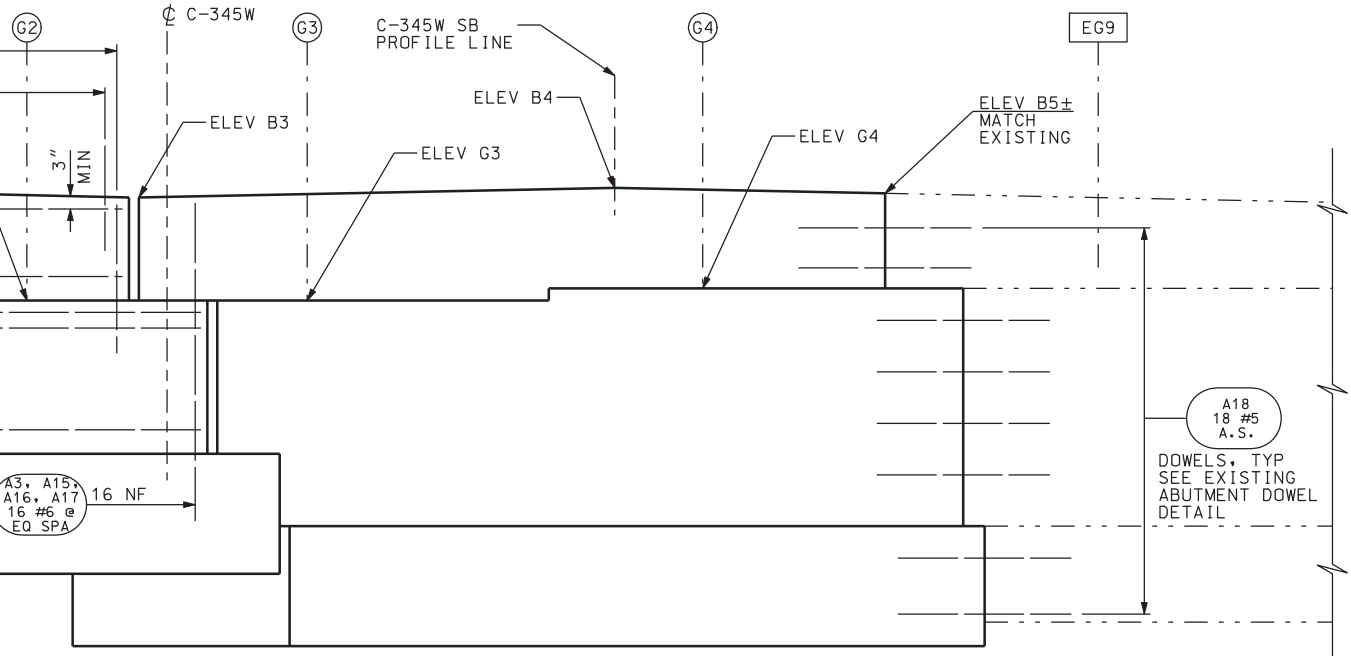


## NT

WIDENING,

| ULE (SEE NOTE 5 & 6) | | | | | |
|---|---|---|---|---|---|
| G4 | ELEV B1 | ELEV B2 | ELEV B3 | ELEV B4 | ELEV B5 |
| 32 | 4532.82 | 4532.90 | 4532.71 | 4532.83 | 4532.72 |
| 76 | 4533.17 | 4533.26 | 4533.11 | 4533.26 | 4533.17 |

| QUANTITIES | |
|---|---|
| STRUCTURAL CONCRETE | |
| ABUTMENTS 1 & 4 (NB & SB) | 73.4 CY |

| NO. | DATE | BY | REMARKS |
|---|---|---|---|
| | | | |

REVISIONS

UTAH DEPARTMENT OF TRANSPORTATION
SALT LAKE CITY, UTAH
HDR ENGINEERING, INC.

DESIGN RDH 11/04 CHECK GCG 11/04
DRAWN JG 11/04 CHECK RDH 11/04
QUANT. RDH 11/04 CHECK GCG 11/04

APPROVAL RECOMM. DATE SENIOR DESIGN ENGR.
APPROVED FOR USE BY UDOT DATE UDOT BRIDGE ENGR.

I-15; CORRIDOR IN UTAH COUNTY
I-15 OVER 300 WEST IN AMERICAN FORK
ABUTMENT PLAN & ELEVATION
PROJECT NUMBER SP-15-6(52)241

UTAH
COUNTY

C-345W
DRG. NO.

SHT. 7 OF 26

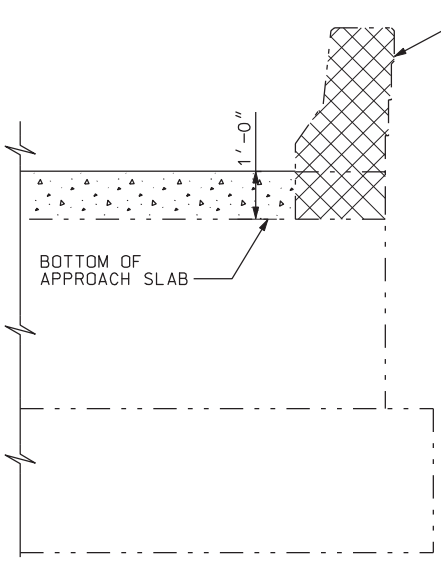


SECTION AT BACKWALL

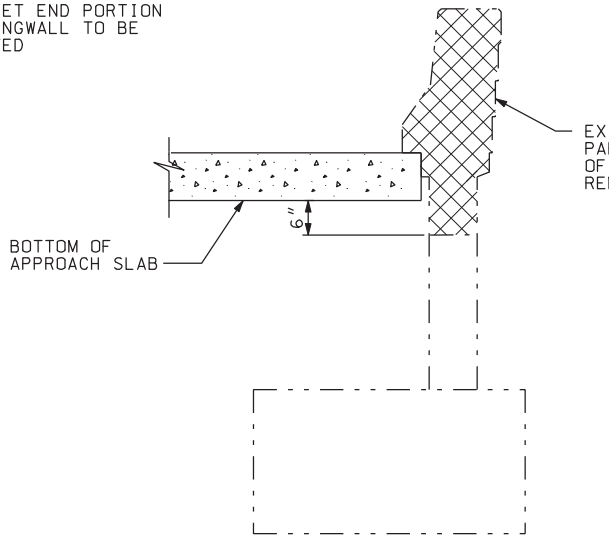


SECTION BEHIND BACKWALL

## WINGWALL REMOVAL DETAILS

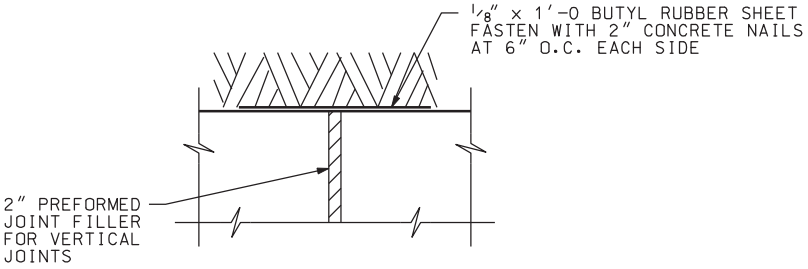


## CONTRACTION JOINT DETAIL

USE RUBBER SHEET ON FACES OF JOINT IN CONTACT WITH SOIL

02-MAY-2005 DGN File: IP_PWP:dms1717\4433_C-345-08_ABUTDT01.dgn

ISTING CONCRETE
RAPET AND PORTION
WINGWALL TO BE
MOVED

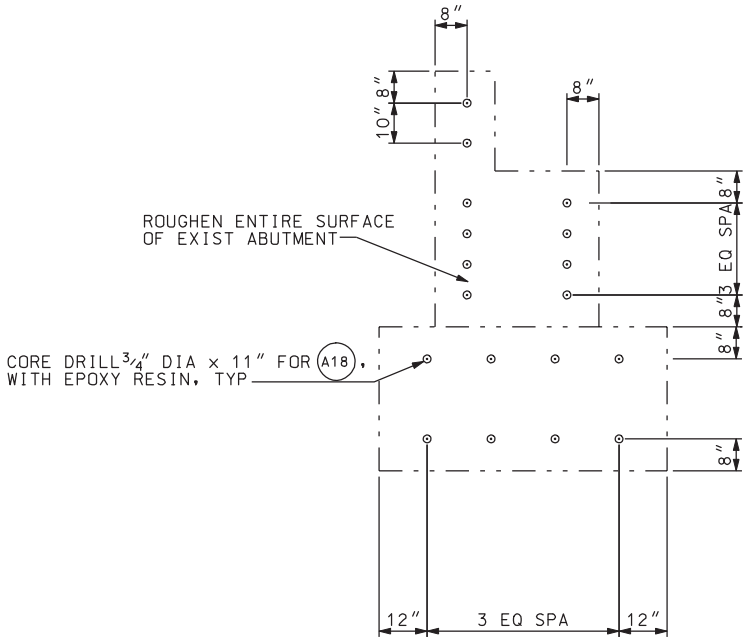


## EXISTING ABUTMENT DOWEL DETAIL

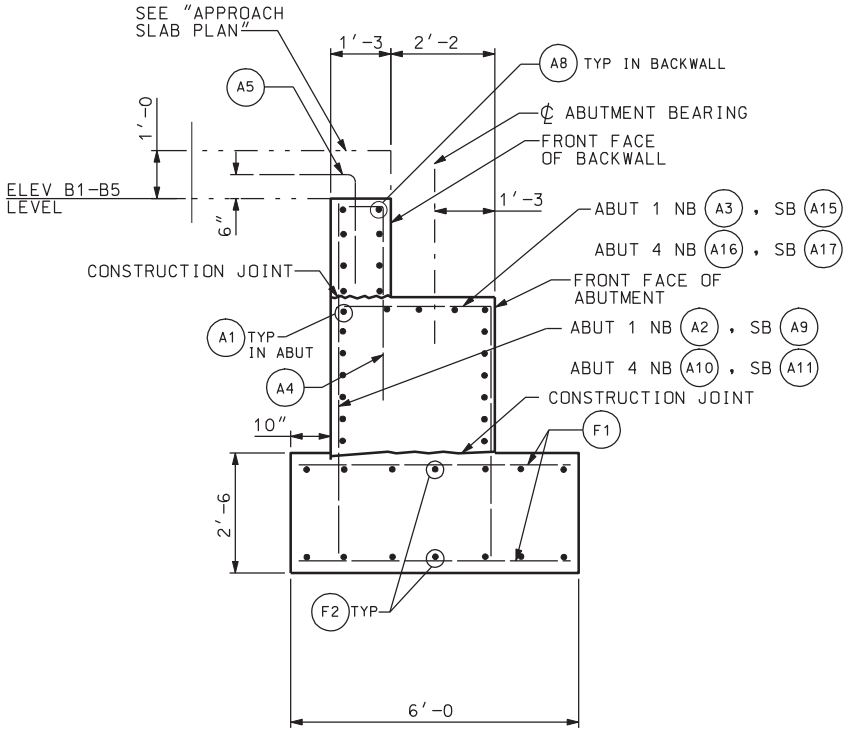


## SECTION A-A

| NO. | DATE | BY | REMARKS |
|---|---|---|---|
| | | | |

REVISIONS

UTAH DEPARTMENT OF TRANSPORTATION
SALT LAKE CITY, UTAH
HDR ENGINEERING, INC.

DESIGN RDH 11/04 CHECK GCG 11/04
DRAWN JG 11/04 CHECK RDH 11/04
QUANT. RDH 11/04 CHECK GCG 11/04

APPROVAL RECOMM. DATE SENIOR DESIGN ENGR.
APPROVED FOR USE BY UDOT DATE UDOT BRIDGE ENGR.

I-15; CORRIDOR IN UTAH COUNTY
I-15 OVER 300 WEST IN AMERICAN FORK
ABUTMENT DETAILS

PROJECT NUMBER SP-15-6(52)241

UTAH
COUNTY

C-345W
DRG. NO.

SHT. 8 OF 26

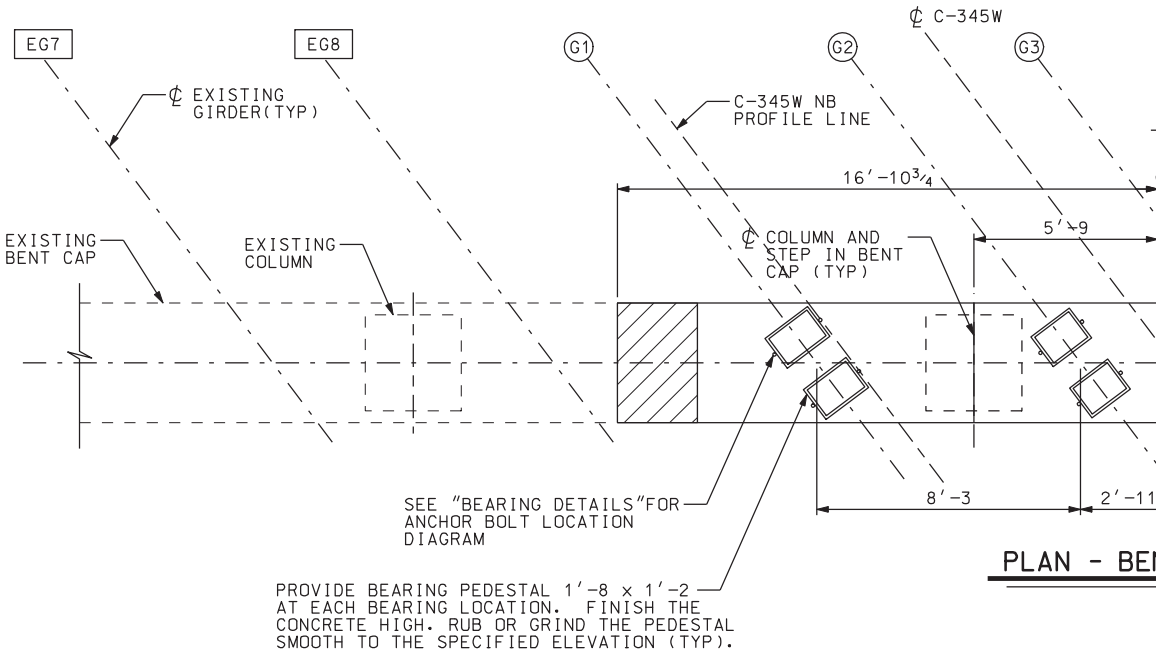


PLAN - BE

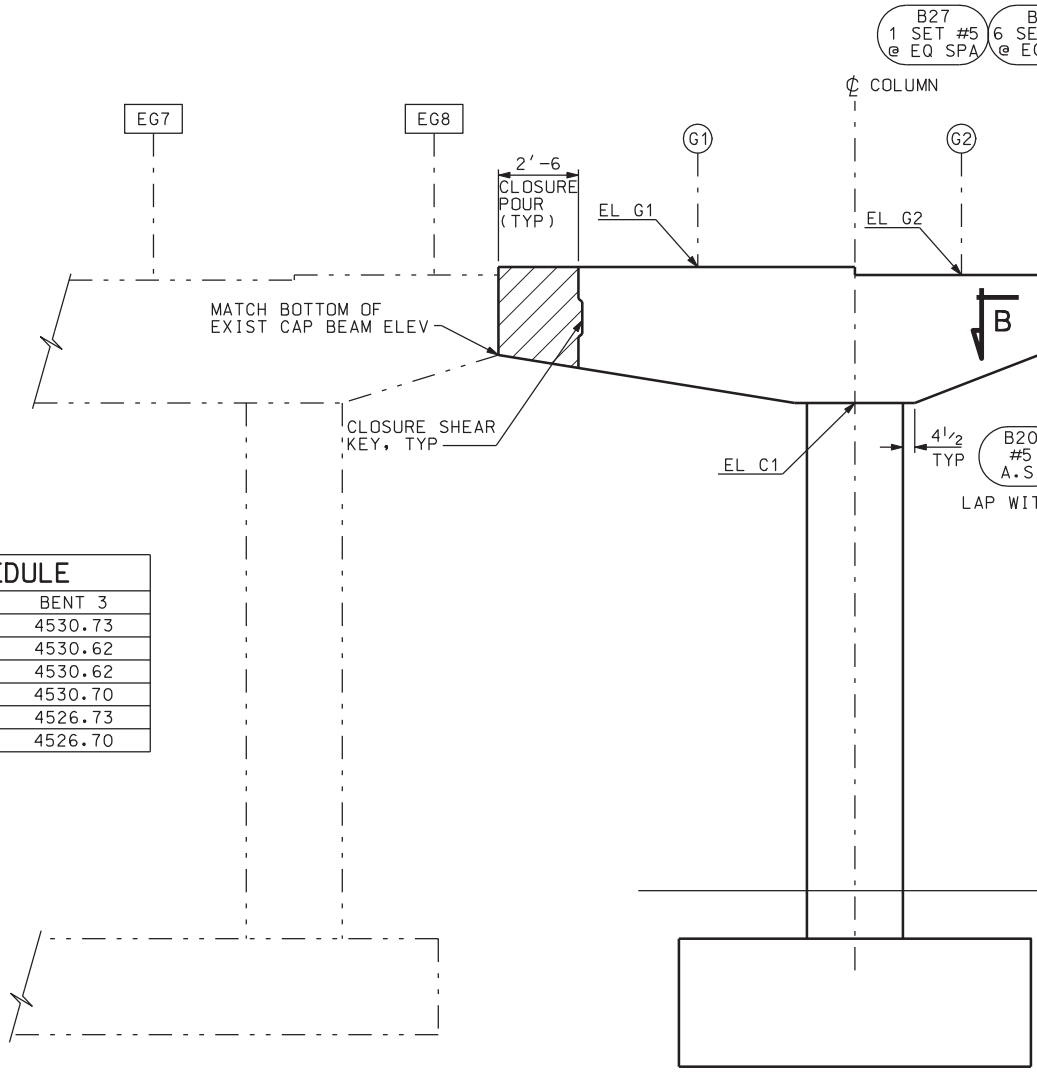


| ELEVATION SCHEDULE | | |
|---|---|---|
| LOCATION | BENT 2 | BENT 3 |
| G1 | 4530.60 | 4530.73 |
| G2 | 4530.49 | 4530.62 |
| G3 | 4530.48 | 4530.62 |
| G4 | 4530.55 | 4530.70 |
| C1 | 4526.60 | 4526.73 |
| C2 | 4526.55 | 4526.70 |

ELEVATION - E

DGN File: IP_PWP:dms1717\4433_C-345-09_BENT01.dgn
02-MAY-2005

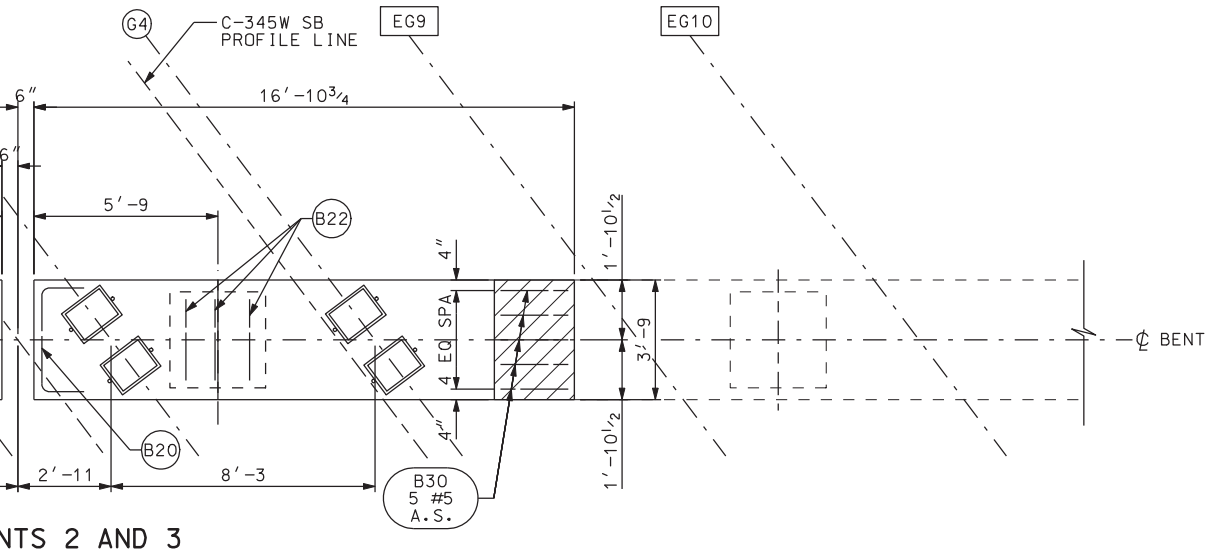


NTS 2 AND 3

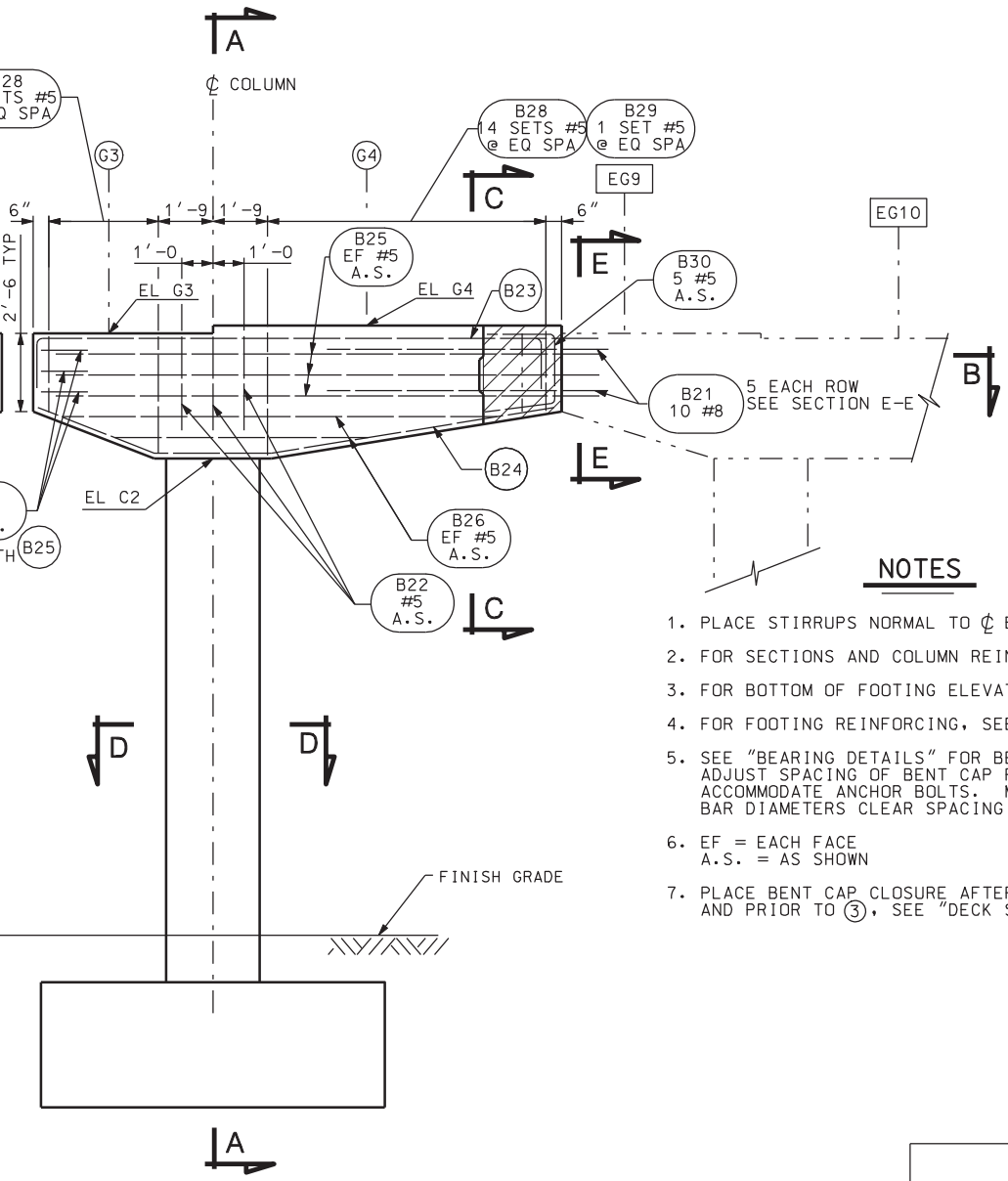


BENTS 2 AND 3

## NOTES

1. PLACE STIRRUPS NORMAL TO ℄ BENT.
2. FOR SECTIONS AND COLUMN REINFORCING, SEE "BENT DETAILS".
3. FOR BOTTOM OF FOOTING ELEVATIONS, SEE "FOUNDATION PLAN".
4. FOR FOOTING REINFORCING, SEE "BENT FOOTING DETAILS".
5. SEE "BEARING DETAILS" FOR BEARING AND ANCHOR BOLT DETAIL. ADJUST SPACING OF BENT CAP REINFORCING UP TO 4" TO ACCOMMODATE ANCHOR BOLTS. MAINTAIN AT LEAST TWO BAR DIAMETERS CLEAR SPACING BETWEEN BARS.
6. EF = EACH FACE
   A.S. = AS SHOWN
7. PLACE BENT CAP CLOSURE AFTER DECK SLAB POUR SEQUENCE ② AND PRIOR TO ③, SEE "DECK SLAB PLAN" SHEET.

## QUANTITIES
STRUCTURAL CONCRETE

| LOCATION | BENT 2 | BENT 3 |
|---|---|---|
| BENT CAPS | 16.0 CY | 16.0 CY |
| COLUMNS | 12.0 CY | 12.0 CY |
| TOTAL | 28.0 CY | 28.0 CY |

| NO. | DATE | BY | REMARKS |
|---|---|---|---|
| | | | |

REVISIONS

UTAH DEPARTMENT OF TRANSPORTATION
SALT LAKE CITY, UTAH
HDR ENGINEERING, INC.

DESIGN RDH 11/04 CHECK GCG 11/04
DRAWN JG 11/04 CHECK RDH 11/04
QUANT. GCG 11/04 CHECK RDH 11/04

APPROVAL RECOMM. DATE SENIOR DESIGN ENGR.
APPROVED FOR USE BY UDOT DATE UDOT BRIDGE ENGR.

I-15; CORRIDOR IN UTAH COUNTY
I-15 OVER 300 WEST IN AMERICAN FORK
BENT PLAN AND ELEVATION

PROJECT NUMBER SP-15-6(52)241

UTAH
COUNTY

C-345W
DRG. NO.

SHT. 9 OF 26

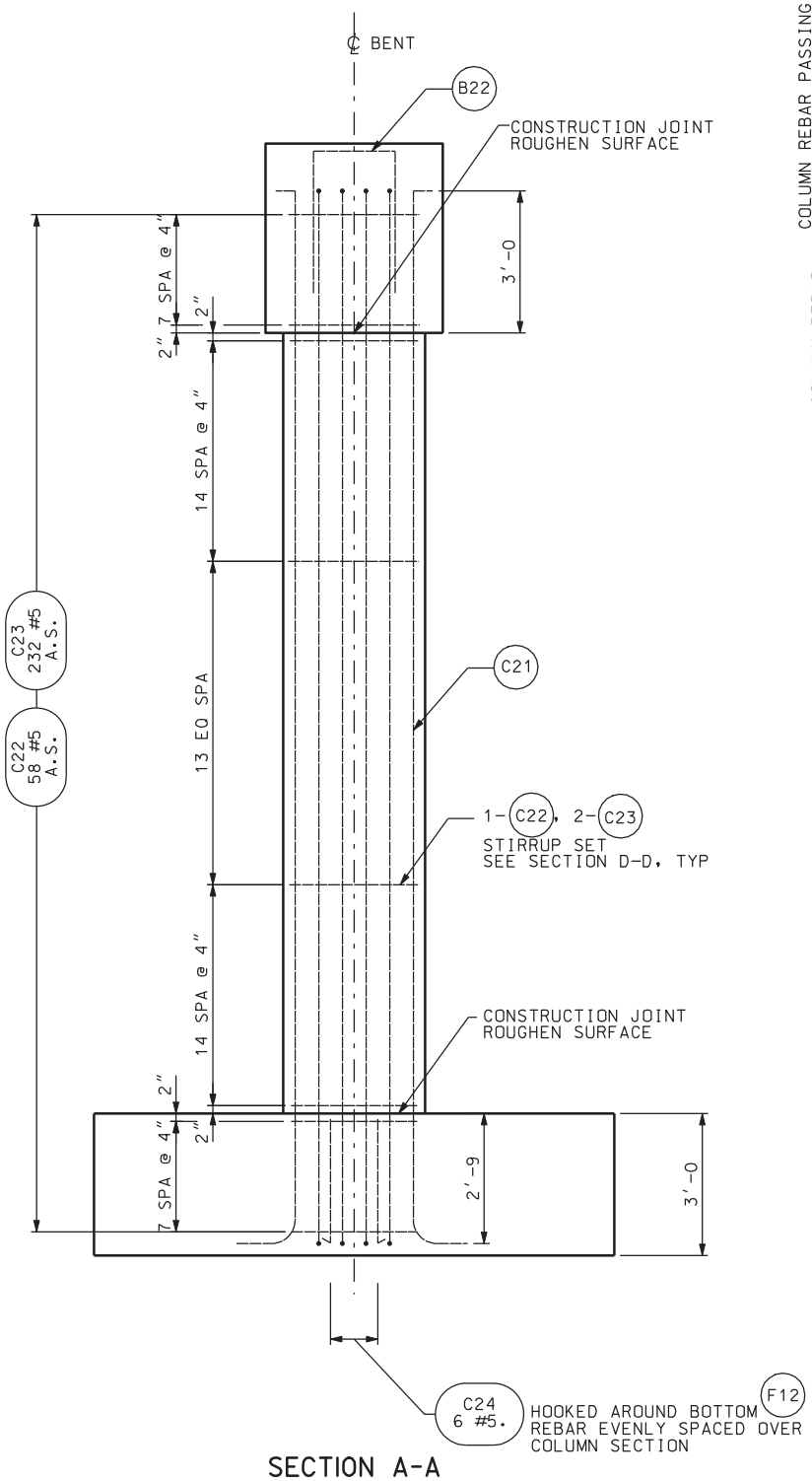


## SECTION A-A

CAP AND FOOTING REINFORCEMENT NOT SHOWN
FOR CLARITY. SEE "BENT FOOTING DETAILS"
FOR FOOTING REINFORCEMENT.

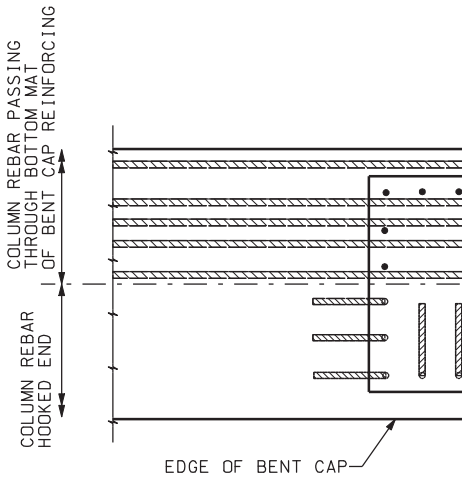


SECTI

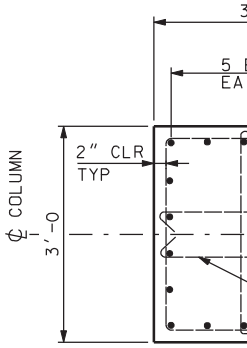


SECTI

DGN File: IP_PWP:dms11717\4433_C-345-10_BENTDT01.dgn
02-MAY-2005

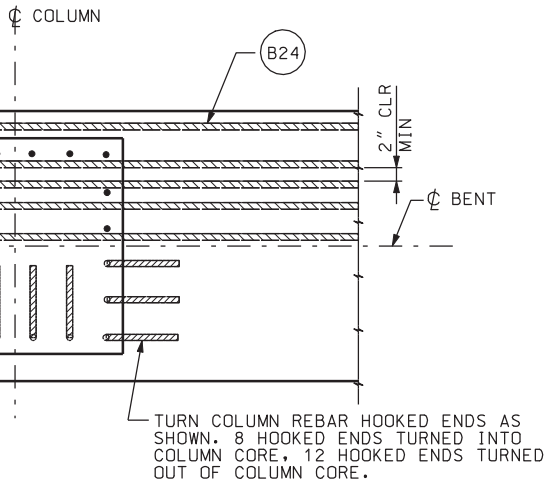


ON B-B

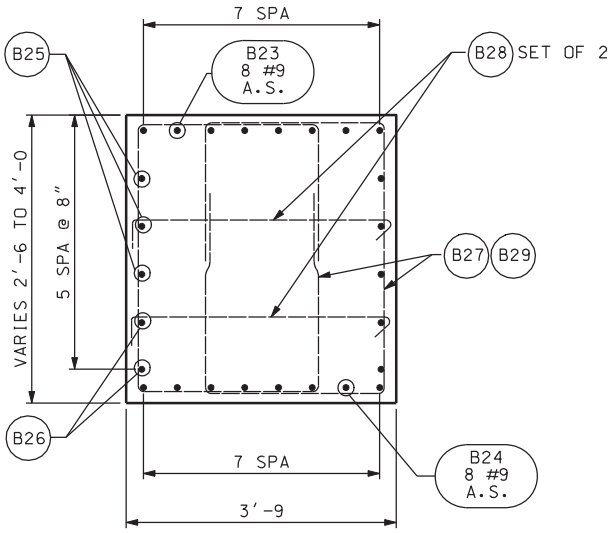


SECTION C-C

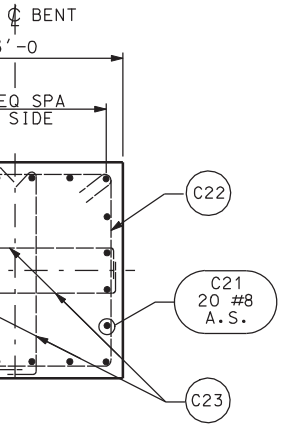


ON D-D

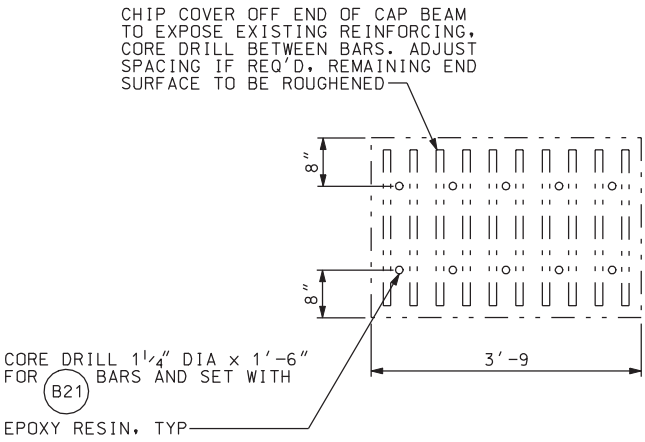


SECTION E-E

## NOTES

1. ADJUST SPACING OF FOOTING AND BENT CAP REINFORCING UP TO 4" TO ACCOMMODATE COLUMN REINFORCING. MAINTAIN AT LEAST THREE BAR DIAMETER SPACING.
2. ADJUST HOOP AND TIE REINFORCING TO AVOID CONFLICT WITH BENT CAP REINFORCING.
3. ALTERNATE 90° AND 135° HOOKS AT ENDS OF TIES AND STIRRUPS.

| NO. | DATE | BY | REMARKS |
|---|---|---|---|

REVISIONS

UTAH DEPARTMENT OF TRANSPORTATION
SALT LAKE CITY, UTAH
HDR ENGINEERING, INC.

DESIGN RDH 11/04 CHECK GCG 11/04
DRAWN JG 11/04 CHECK RDH 11/04
QUANT. RDH 11/04 CHECK GCG 11/04

APPROVAL RECOMM. DATE SENIOR DESIGN ENGR.
APPROVED FOR USE BY UDOT DATE UDOT BRIDGE ENGR.

I-15; CORRIDOR IN UTAH COUNTY
I-15 OVER 300 WEST IN AMERICAN FORK
BENT DETAILS
PROJECT NUMBER SP-15-6(52)241

UTAH
COUNTY

C-345W
DRG. NO.

SHT. 10 OF 26

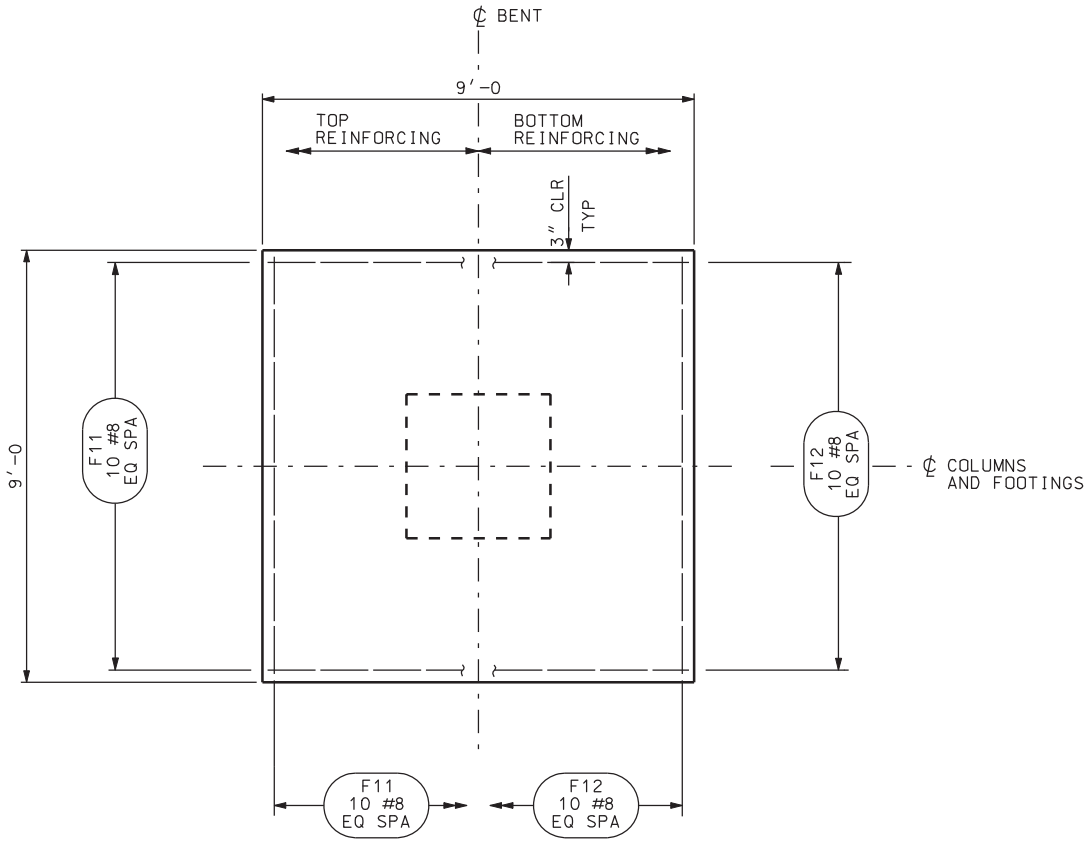


## FOOTING PLAN - BENTS 2 AND 3

ADJUST SPACING OF FOOTING REINFORCEMENT UP TO 4″ TO ACCOMMODATE COLUMN REINFORCEMENT.

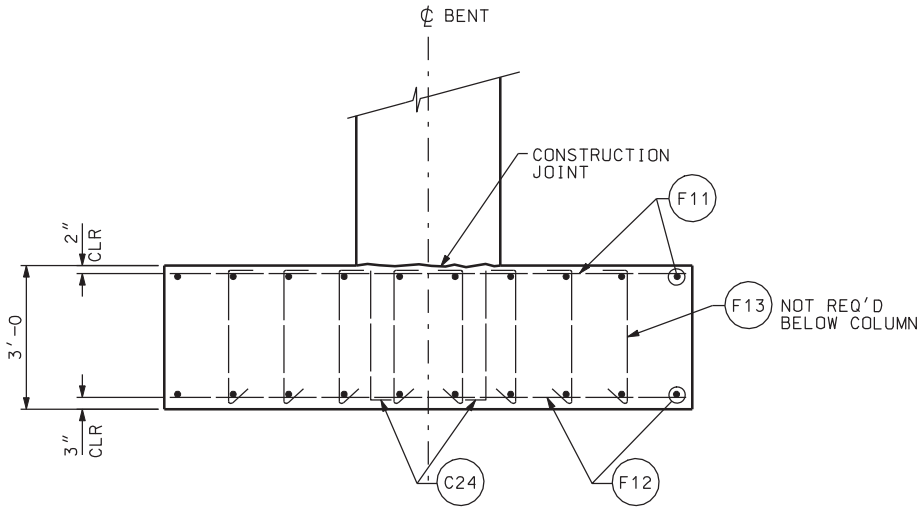


## ELEVATION - BENTS 2 AND 3

COLUMN REINFORCEMENT NOT SHOWN FOR CLARITY.

DGN File: IP_PWP:dms1717\4433_C-345-11_BENT02.dgn
02-MAY-2005

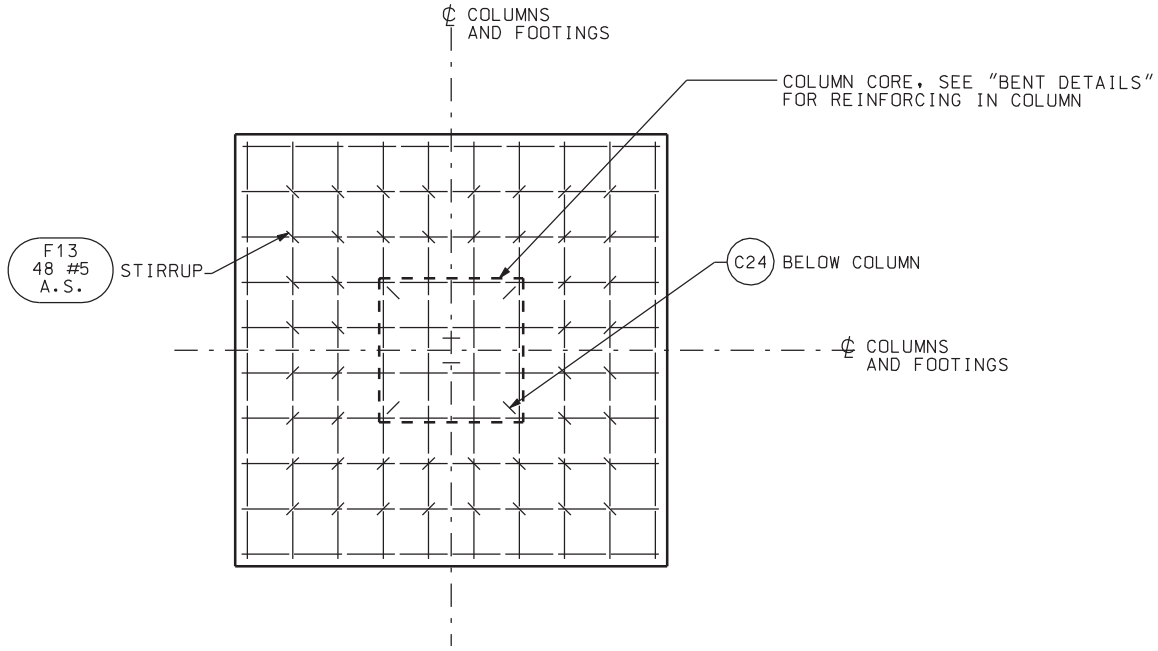


## FOOTING TIE SPACING

TOP REINFORCING SHOWN, HOOK BARS AROUND BOTTOM
MAT OF REINFORCING AS SHOWN IN ELEVATION.

| QUANTITIES | |
|---|---|
| STRUCTURAL CONCRETE | |
| BENTS 2 & 3 (4 LOCATIONS) | 36.0 CY |

| NO. | DATE | BY | REMARKS |
|---|---|---|---|
| | | | |

REVISIONS

UTAH DEPARTMENT OF TRANSPORTATION
SALT LAKE CITY, UTAH
HDR ENGINEERING, INC.

DESIGN RDH 11/04 CHECK GCG 11/04
DRAWN JMG 11/04 CHECK RDH 11/04
QUANT. RDH 11/04 CHECK GCG 11/04

APPROVAL RECOMM. DATE SENIOR DESIGN ENGR.
APPROVED FOR USE BY UDOT DATE UDOT BRIDGE ENGR.

I-15; CORRIDOR IN UTAH COUNTY
I-15 OVER 300 WEST IN AMERICAN FORK
BENT FOOTING DETAILS

PROJECT NUMBER SP-15-6(52)241

UTAH
COUNTY

C-345W
DRG. NO.

SHT. 11 OF 26

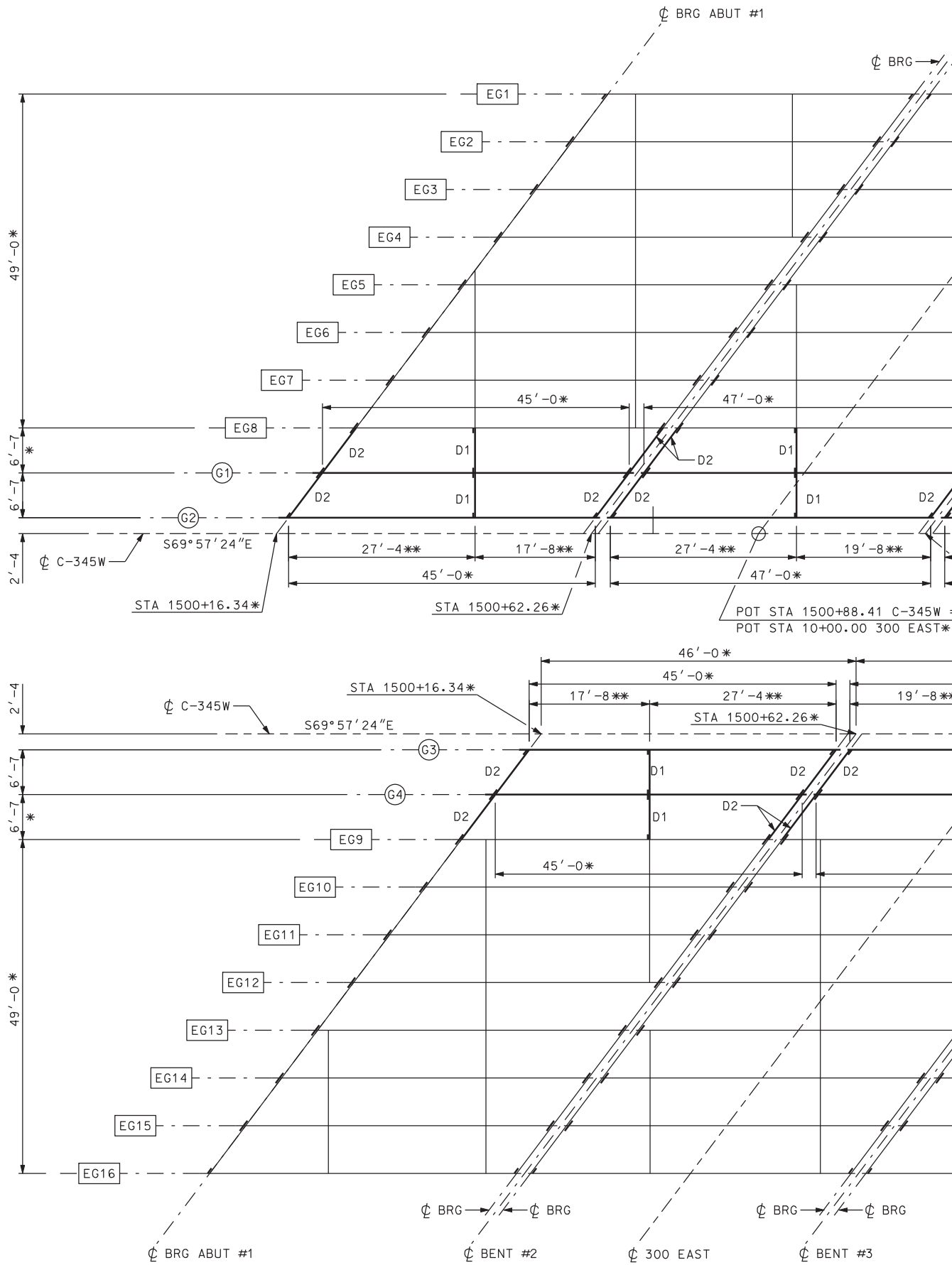


## FRAMING PLAN

DGN File: IP_PWP:dms1717\44433_C-345-12_FRAMING.dgn

02-MAY-2005

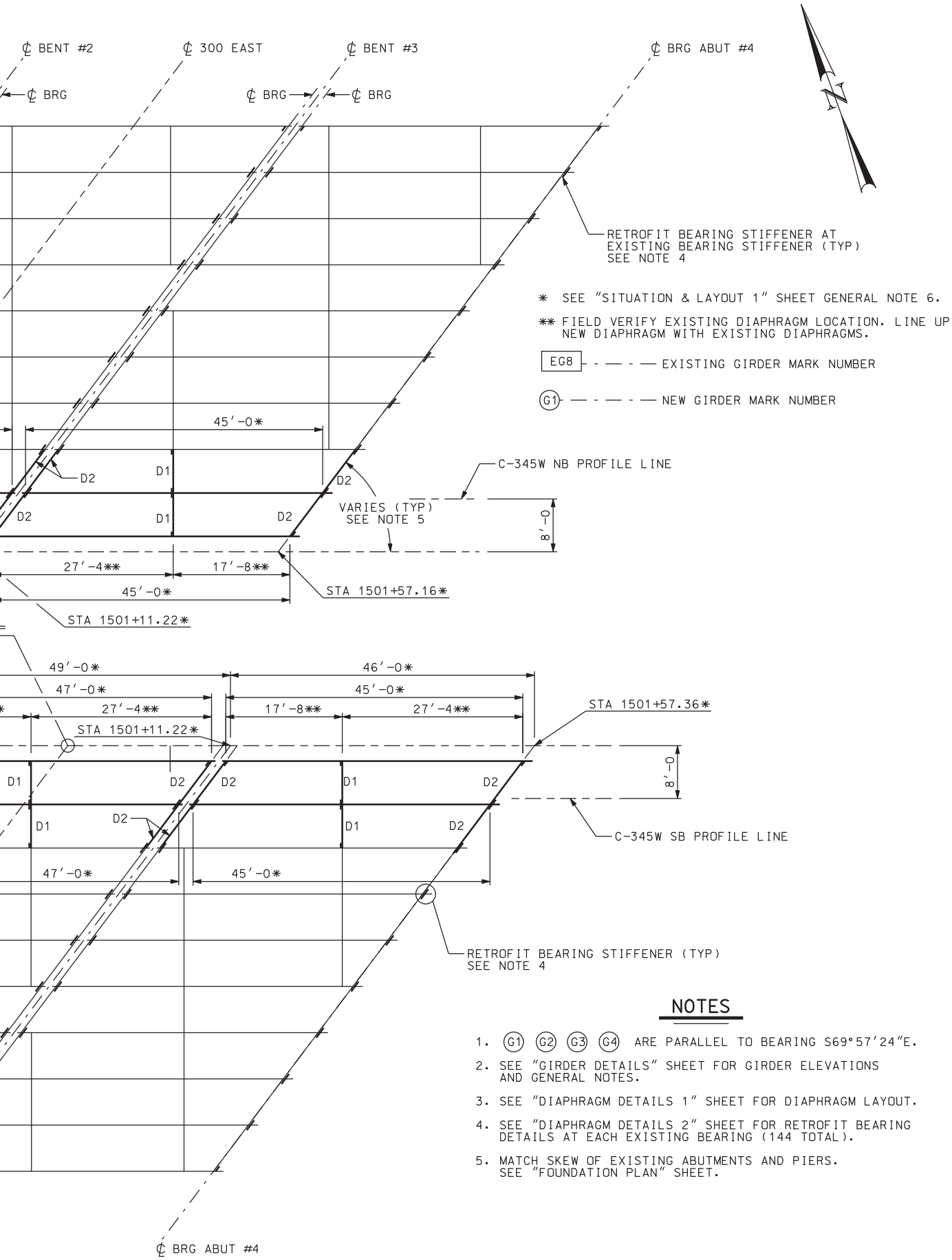


∗ SEE "SITUATION & LAYOUT 1" SHEET GENERAL NOTE 6.

∗∗ FIELD VERIFY EXISTING DIAPHRAGM LOCATION. LINE UP NEW DIAPHRAGM WITH EXISTING DIAPHRAGMS.

EG8 — - — - — EXISTING GIRDER MARK NUMBER

(G1) — - — - — NEW GIRDER MARK NUMBER

## NOTES

1. (G1) (G2) (G3) (G4) ARE PARALLEL TO BEARING S69°57′24″E.
2. SEE "GIRDER DETAILS" SHEET FOR GIRDER ELEVATIONS AND GENERAL NOTES.
3. SEE "DIAPHRAGM DETAILS 1" SHEET FOR DIAPHRAGM LAYOUT.
4. SEE "DIAPHRAGM DETAILS 2" SHEET FOR RETROFIT BEARING DETAILS AT EACH EXISTING BEARING (144 TOTAL).
5. MATCH SKEW OF EXISTING ABUTMENTS AND PIERS. SEE "FOUNDATION PLAN" SHEET.

| NO. | DATE | BY | REMARKS |
|---|---|---|---|

REVISIONS

UTAH DEPARTMENT OF TRANSPORTATION
SALT LAKE CITY, UTAH
HDR ENGINEERING, INC.

DESIGN RDH 11/04 CHECK GCG 11/04
DRAWN JG 11/04 CHECK RDH 11/04
QUANT. RDH 11/04 CHECK GCG 11/04

APPROVAL RECOMM. DATE SENIOR DESIGN ENGR.
APPROVED FOR USE BY UDOT DATE UDOT BRIDGE ENGR.

I-15; CORRIDOR IN UTAH COUNTY
I-15 OVER 300 WEST IN AMERICAN FORK
FRAMING PLAN

PROJECT NUMBER SP-15-6(52)241

UTAH
COUNTY

C-345W
DRG. NO.

SHT. 12 OF 26

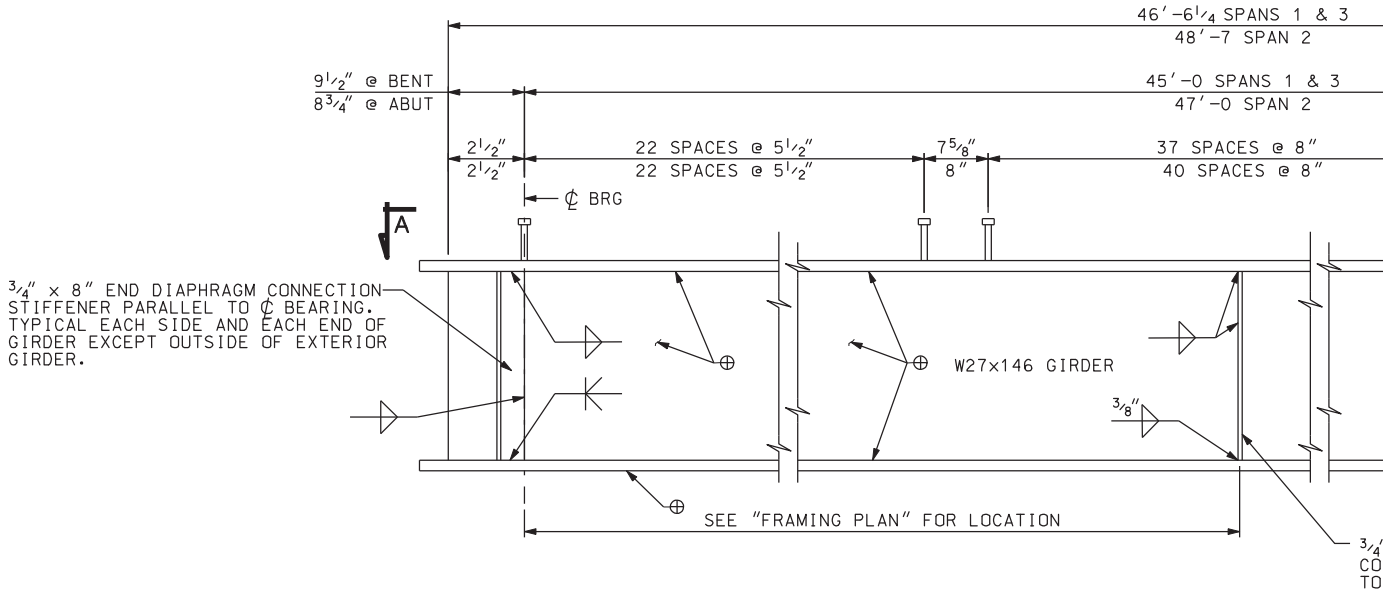


GIRDER ELEVATIO

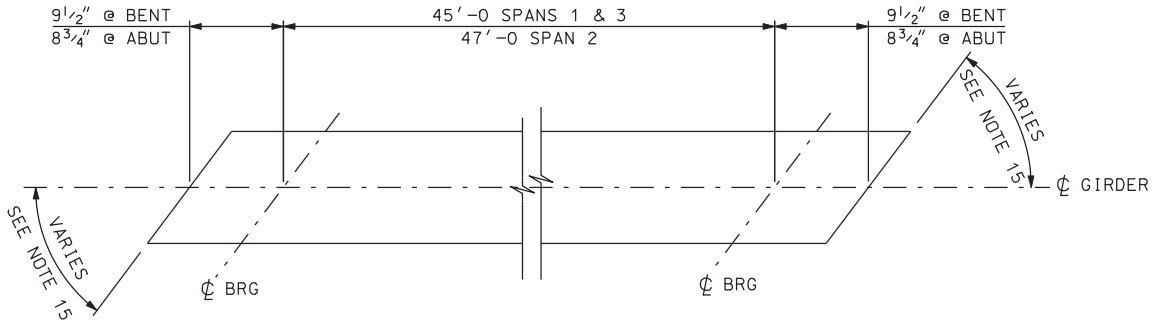


SECTION A-A

DGN File: IP_PWP:dms1717\44433_C-345-13_STEEL01.dgn
02-MAY-2005

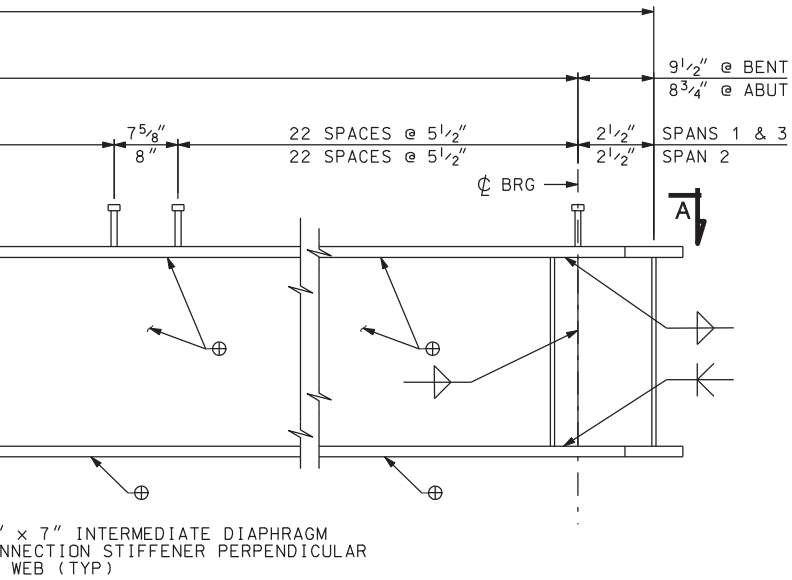


ON

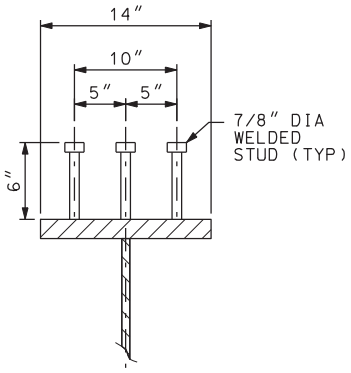


SHEAR STUD DETAIL

## NOTES

1. ERECT THE GIRDERS WITH THE NATURAL CAMBER UP.
2. PERFORM CHARPY V-NOTCH TOUGHNESS TEST ON ALL MAIN LOAD CARRYING MEMBERS, INDICATED BY ⊕, TO MEET REQUIREMENTS FOR ZONE 2.
3. ALL DIMENSIONS SHOWN ARE HORIZONTAL. ADJUST LENGTHS AS NECESSARY IN FABRICATION TO TAKE VERTICAL GRADE INTO ACCOUNT.
4. ALL INTERMEDIATE CROSS DIAPHRAGMS ARE NORMAL TO THE WEB. BEARING STIFFENERS ARE PARALLEL TO THE CENTERLINE OF BEARINGS.
5. CENTERLINES OF GIRDERS ARE PARALLEL TO THE CENTERLINE C-345W.
6. INCLUDE THE PRICE FOR SHEAR STUDS, BOLTS, DIAPHRAGMS AND STIFFENERS IN THE CONTRACT PRICE FOR STRUCTURAL STEEL.
7. SEE "BEARING DETAILS" SHEET FOR SOLE PLATE AND BEARING DETAILS.
8. USE STRUCTURAL STEEL CONFORMING TO AASHTO M270 GRADE 36 MINIMUM FOR ALL STRUCTURAL STEEL.
9. CONFORM WELDING, WELDER QUALIFICATIONS, PREQUALIFICATION OF WELD DETAILS AND INSPECTION OF WELDS TO THE REQUIREMENTS OF THE ANSI/AASHTO/AWS BRIDGE WELDING CODE D1.5.
10. THE METHODS OF JOINT PREPARATION FOR WELDING SHOWN ON THE PLANS ARE BASED ON THE USE OF MANUAL SHIELDED METAL-ARC WELDING. THE USE OF THIS OR ANY OTHER WELDING PROCESS WILL BE SATISFACTORY ONLY AFTER THE WELDING PROCEDURE HAS BEEN SUBMITTED BY THE CONTRACTOR AND APPROVED BY THE ENGINEER.
11. USE THE MINIMUM SIZED STRENGTH FILLET WELDS REQUIRED BY ANSI/AASHTO/AWS BRIDGE WELDING CODE D1.5 FOR THE THICKNESS OF THE MATERIAL JOINED UNLESS OTHERWISE SPECIFIED. USE MINIMUM FILLET WELD SIZE OF ¼″.
12. ALL WELDS SHALL BE MINIMUM ¼″.
13. DIMENSIONS SHOWN ON THE PLANS ASSUME THE AMBIENT TEMPERATURE OF THE GIRDER TO BE 70°F. CORRECT THE LENGTH USED IN FABRICATION AT THE RATE OF 1/16″ PER EACH 100′ OF LENGTH FOR EVERY 10°F DIFFERENCE IN TEMPERATURE TO ALLOW FOR EXPANSION AND CONTRACTION.
14. DO NOT FIELD WELD TO GIRDERS EXCEPT WHERE NOTED.
15. CUT GIRDER ENDS TO MATCH SKEW OF EXISTING ABUTMENTS AND PIERS SEE "FOUNDATION PLAN" SHEET .
16. ALL BOLTED CONNECTIONS WILL BE MADE WITH ⅞″ DIA. HIGH STRENGTH BOLTS CONFORMING TO ASTM A325, TYPE 1, UNLESS NOTED OTHERWISE.

| NO. | DATE | BY | REMARKS |
|---|---|---|---|

REVISIONS

UTAH DEPARTMENT OF TRANSPORTATION
SALT LAKE CITY, UTAH
HDR ENGINEERING, INC.

DESIGN RDH 11/04 CHECK GCG 11/04
DRAWN JG 11/04 CHECK RDH 11/04
QUANT. RDH 11/04 CHECK GCG 11/04

APPROVAL RECOMM. DATE SENIOR DESIGN ENGR.
APPROVED FOR USE BY UDOT DATE UDOT BRIDGE ENGR.

I-15; CORRIDOR IN UTAH COUNTY
I-15 OVER 300 WEST IN AMERICAN FORK
GIRDER DETAILS

PROJECT NUMBER SP-15-6(52)241

UTAH
COUNTY

C-345W
DRG. NO.

SHT. 13 OF 26

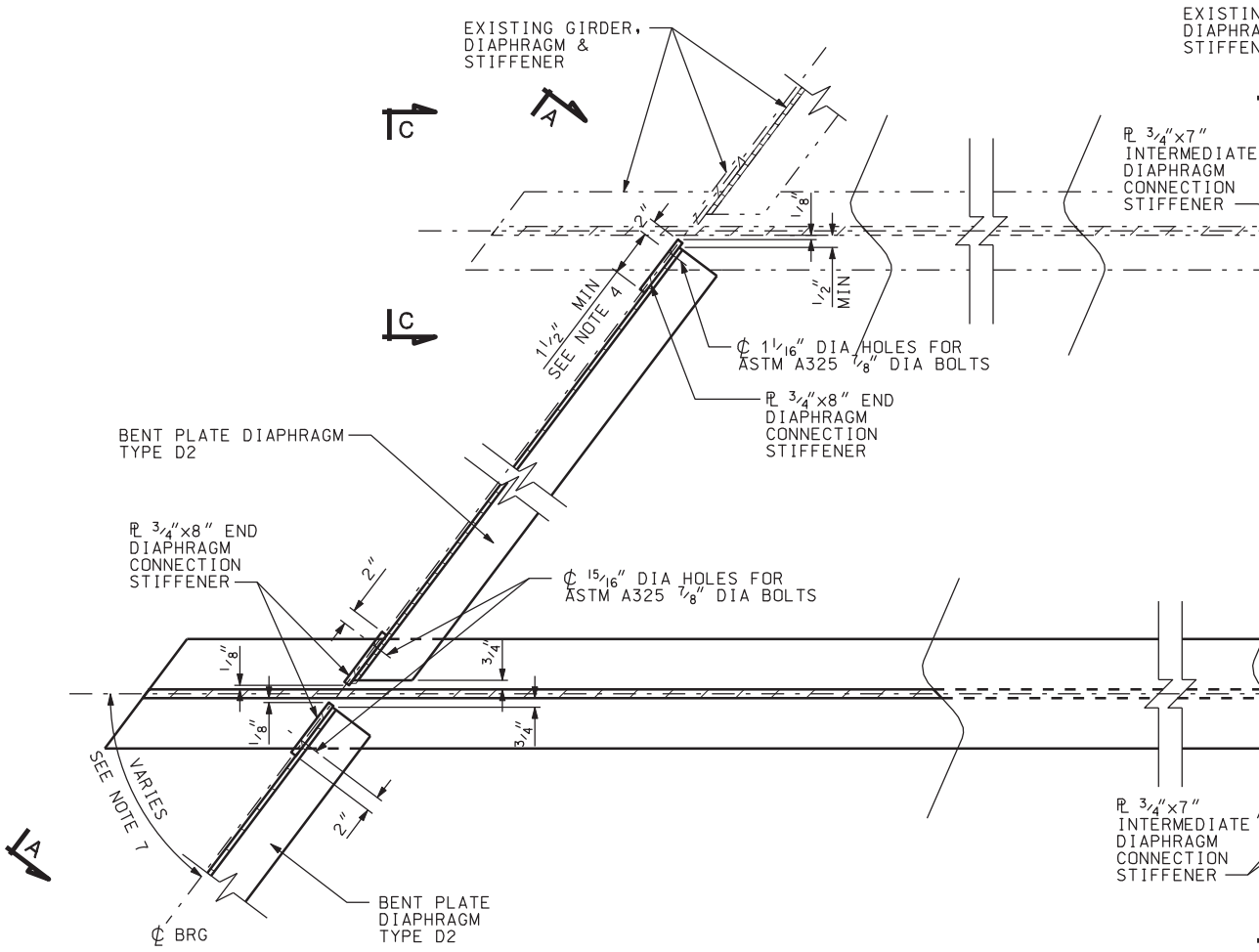


## DIAPHRAGM

NOTE: G1 IS SHOWN. G4 IS SIMILAR (OPP
ONE SIDE STIFFENER AND DIAPHRAGM
REQUIRED FOR G2 AND G3

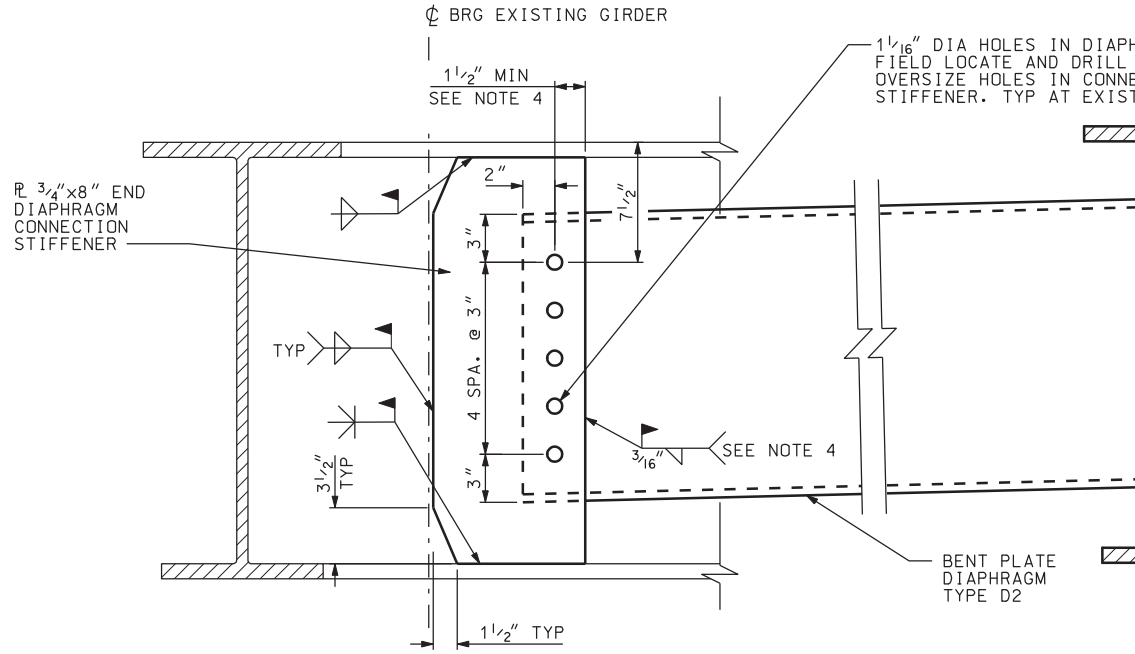


## SECTION A-A

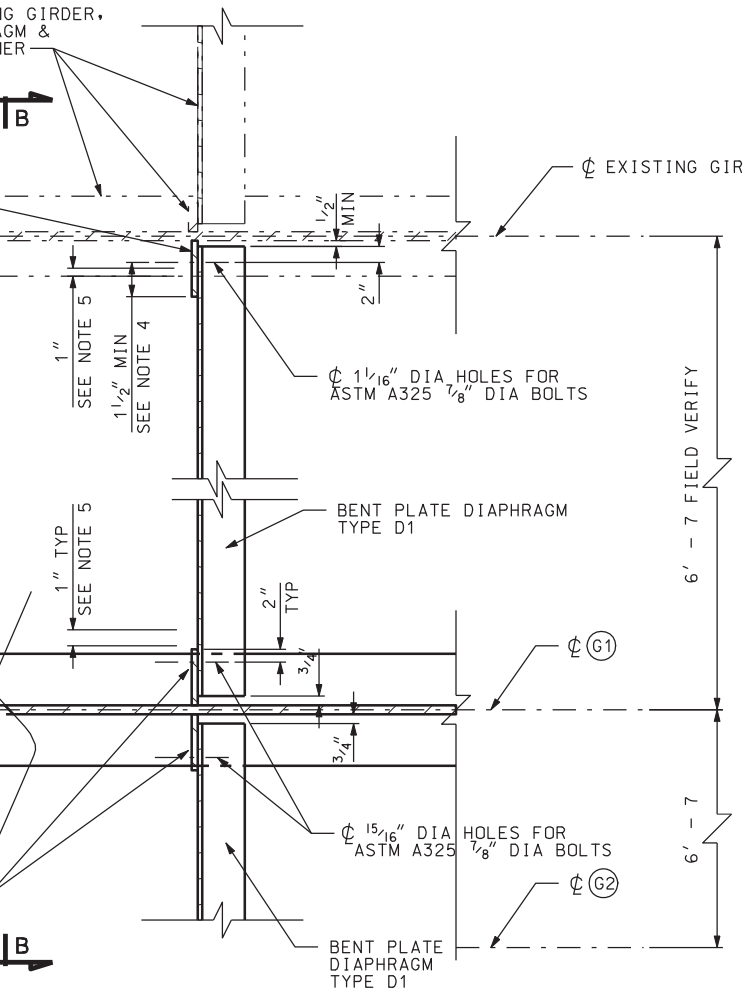


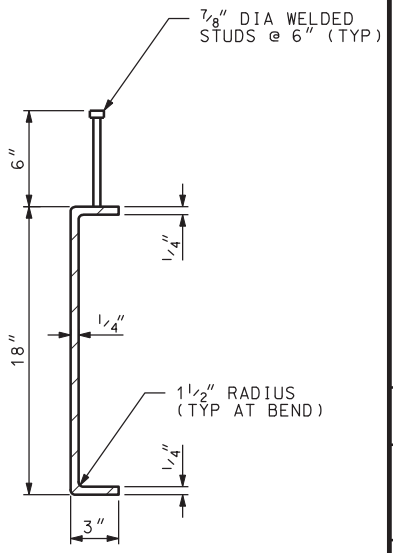


## BENT PLATE DIAPHRAGM DETAIL

NOTE: CONTRACTOR MAY SUBSTITUTE MC18x42.7 FOR BENT PLATE SECTION AT NO ADDITIONAL COST TO THE DEPARTMENT.

## NOTES

1. SEE "FRAMING PLAN" SHEET FOR INTERMEDIATE DIAPHRAGM LOCATIONS.
2. SEE "GIRDER DETAILS" SHEET FOR GENERAL NOTES.
3. SEE "DIAPHRAGM DETAILS 2" SHEET FOR SECTION B-B.
4. IF THE EDGE DISTANCE EXCEEDS 2", FIELD WELD THE STIFFENER EDGE TO THE DIAPHRAGM AFTER THE DECK SLAB CLOSURE POUR IS IN PLACE.
5. STOP FILLET WELDS CONNECTING STIFFENERS TO FLANGES 1" FROM EDGE OF FLANGE.
6. SEE "DIAPHRAGM DETAILS 2" FOR SECTION C-C.
7. MATCH SKEW OF EXISTING ABUTMENTS AND PIERS. SEE "FOUNDATION PLAN" SHEET.

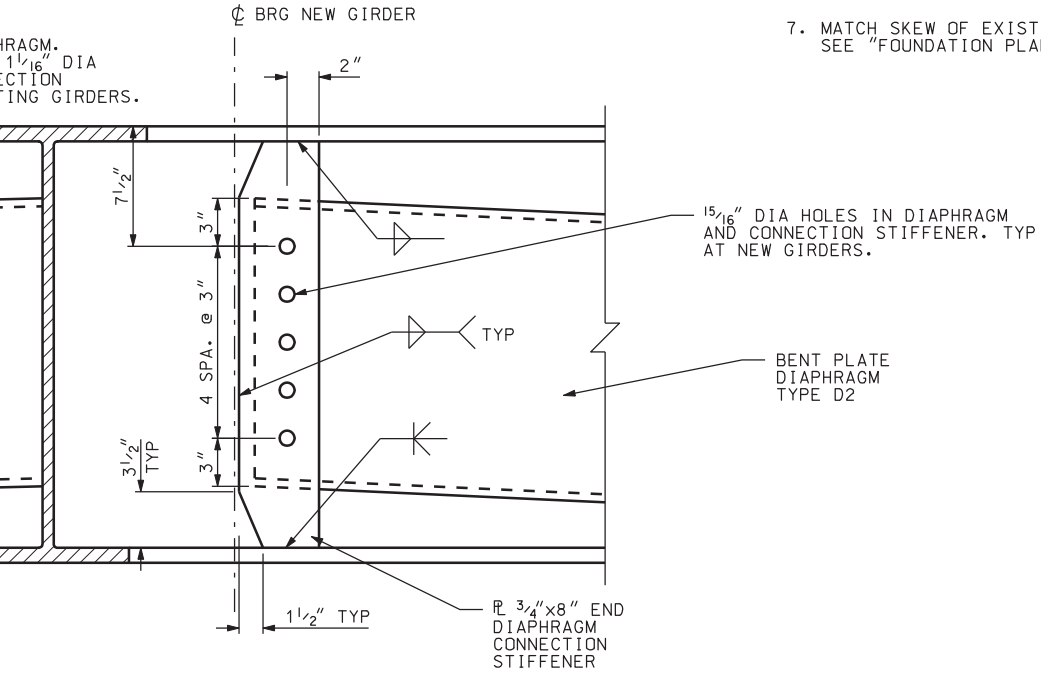


| NO. | DATE | BY | REMARKS |
|---|---|---|---|
| | | | |

REVISIONS

UTAH DEPARTMENT OF TRANSPORTATION
SALT LAKE CITY, UTAH
HDR ENGINEERING, INC.

DESIGN RDH 11/04 CHECK GCG 11/04
DRAWN JG 11/04 CHECK RDH 11/04
QUANT. RDH 11/04 CHECK GCG 11/04

APPROVAL RECOMM. DATE SENIOR DESIGN ENGR.
APPROVED FOR USE BY UDOT DATE UDOT BRIDGE ENGR.

I-15; CORRIDOR IN UTAH COUNTY
I-15 OVER 300 WEST IN AMERICAN FORK
DIAPHRAGM DETAILS 1

PROJECT NUMBER SP-15-6(52)241

UTAH
COUNTY

C-345W
DRG. NO.

SHT. 14 OF 26

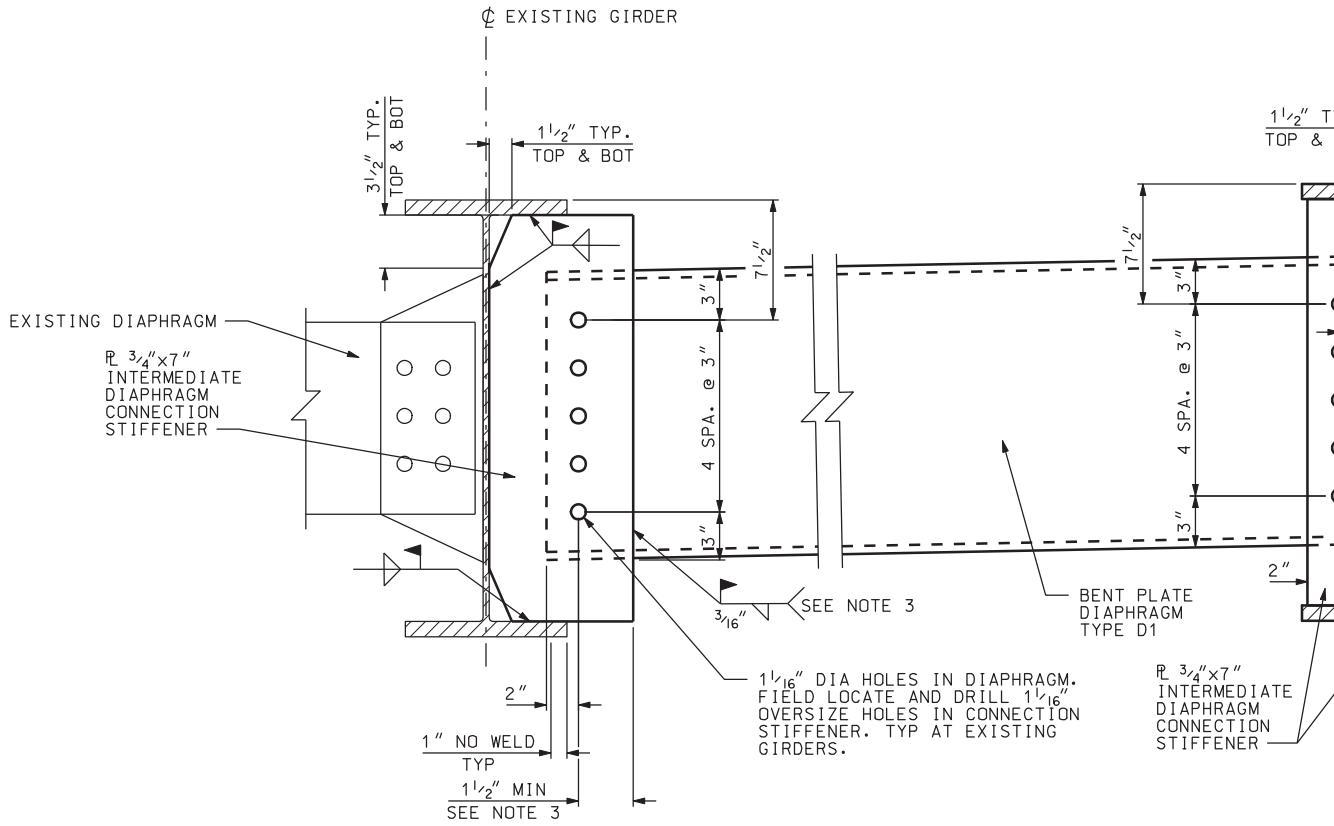


SECTION B-B

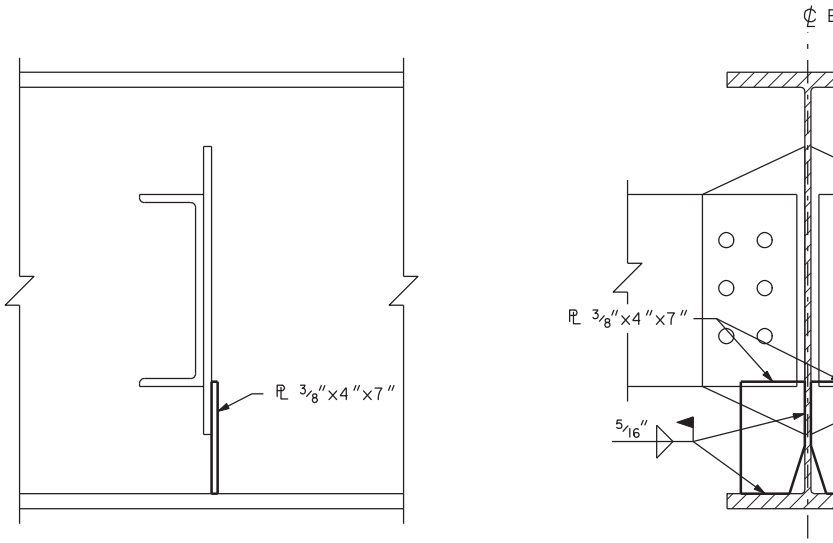


SECTION THRU CHANNEL

SECTION

RETROFIT BEARING STIFFENER DETAIL

DGN File: IP_PWP:dms11717\4433_C-345-15_STEEL03.dgn
02-MAY-2005

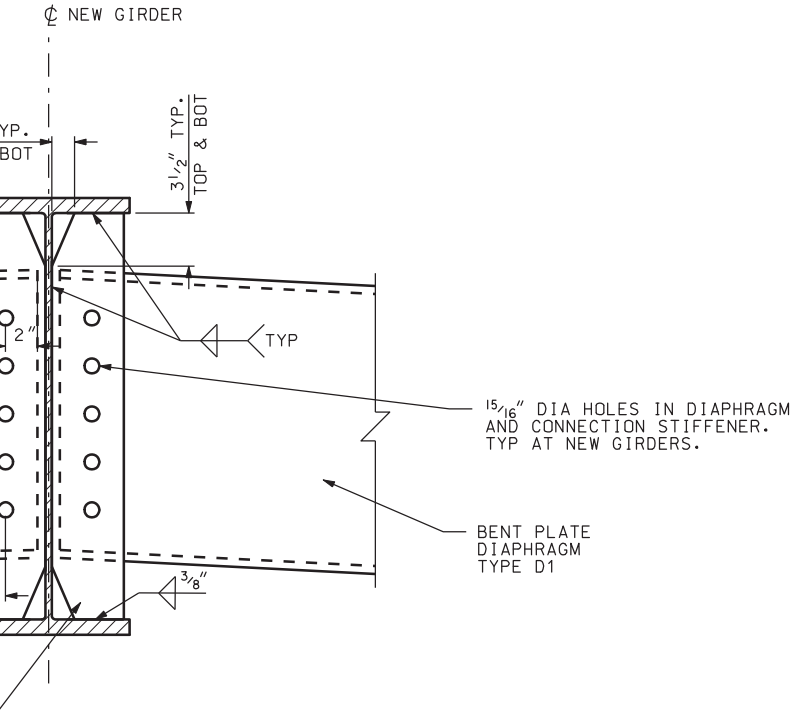


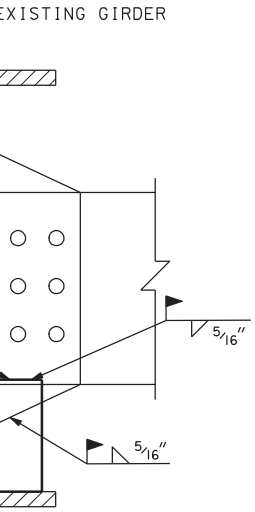


C-C

## NOTES

1. SEE "FRAMING PLAN" SHEET FOR INTERMEDIATE DIAPHRAGM AND RETROFIT BEARING STIFFENER LOCATIONS.
2. SEE "GIRDER DETAILS" SHEET FOR GENERAL NOTES.
3. IF THE EDGE DISTANCE EXCEEDS 2", FIELD WELD THE STIFFENER EDGE TO DIAPHRAGM AFTER THE DECK SLAB CLOSURE POUR IS IN PLACE.

| NO. | DATE | BY | REMARKS |
|---|---|---|---|

REVISIONS

UTAH DEPARTMENT OF TRANSPORTATION
SALT LAKE CITY, UTAH
HDR ENGINEERING, INC.

DESIGN RDH 11/04 CHECK GCG 11/04
DRAWN JG 11/04 CHECK RDH 11/04
QUANT. RDH 11/04 CHECK GCG 11/04

APPROVAL RECOMM. DATE SENIOR DESIGN ENGR.
APPROVED FOR USE BY UDOT DATE UDOT BRIDGE ENGR.

I-15; CORRIDOR IN UTAH COUNTY
I-15 OVER 300 WEST IN AMERICAN FORK
DIAPHRAGM DETAILS 2

PROJECT NUMBER SP-15-6(52)241

UTAH
COUNTY

C-345W
DRG. NO.

SHT. 15 OF 26

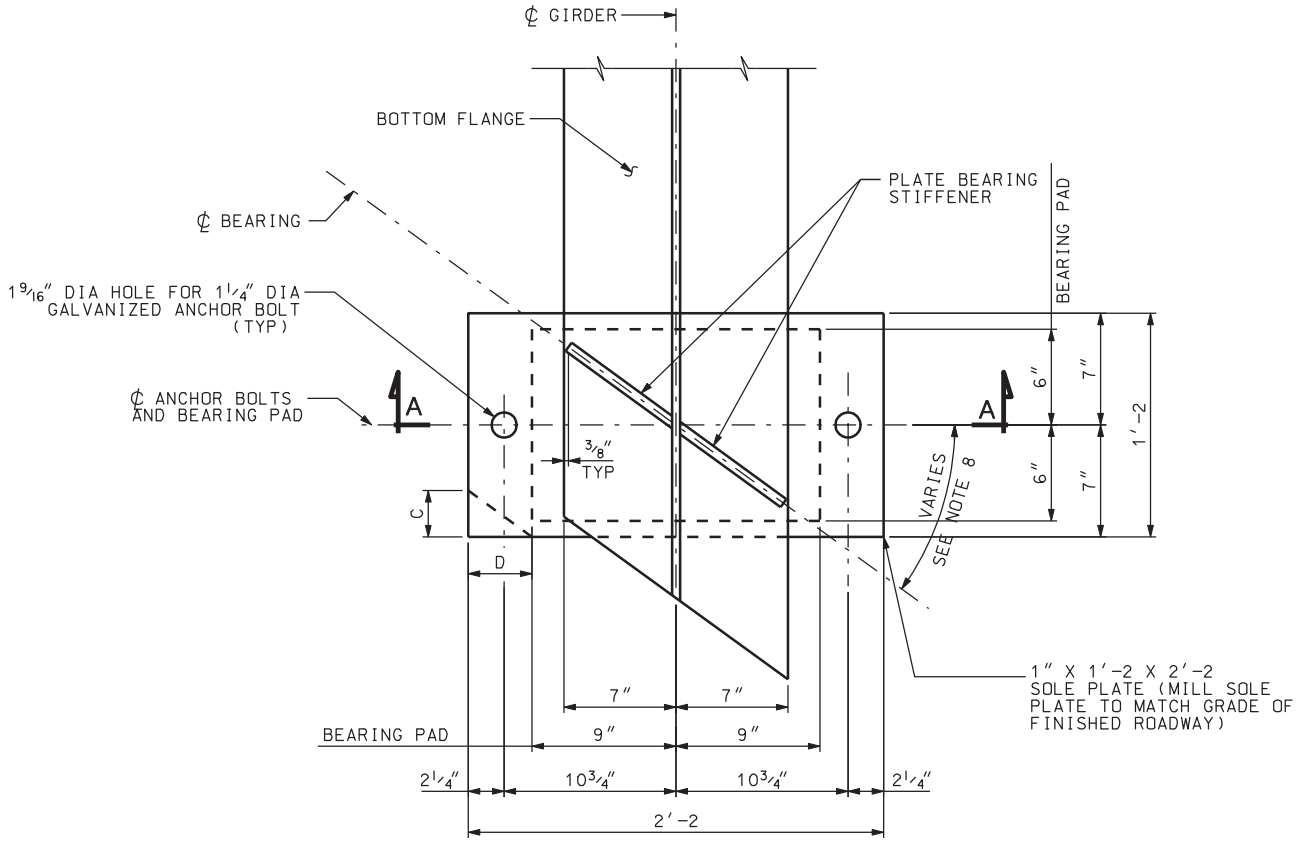


## PLAN

| BEARING DETAILS | | | |
|---|---|---|---|
| | NO. BRG | C | D |
| ABUT 1 | 4 | 3 5/8" | 4 7/8" |
| BENT 2 | 8 | N/A | N/A |
| BENT 3 | 8 | N/A | N/A |
| ABUT 4 | 4 | 3 5/8" | 4 7/8" |

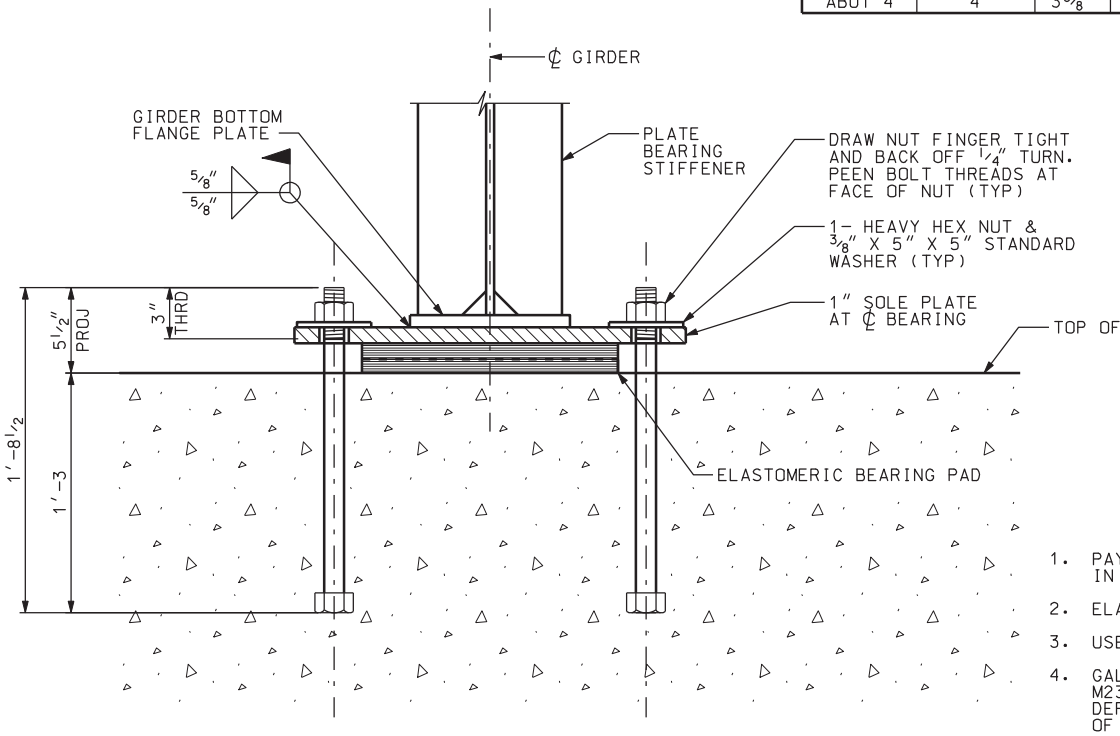


1. PAYMENT
IN THE C
2. ELASTOME
3. USE ASTM
4. GALVANIZ
M232 (AS
DEFECTS
OF THREA
5. FILL ANC
6. SOLE PLA
7. PREFORME
CONSTRUC
8. MATCH SK

## SECTION A-A

DGN File: IP_PWP:dms1717\4433_C-345-16_BRNG01.dgn

02-MAY-2005

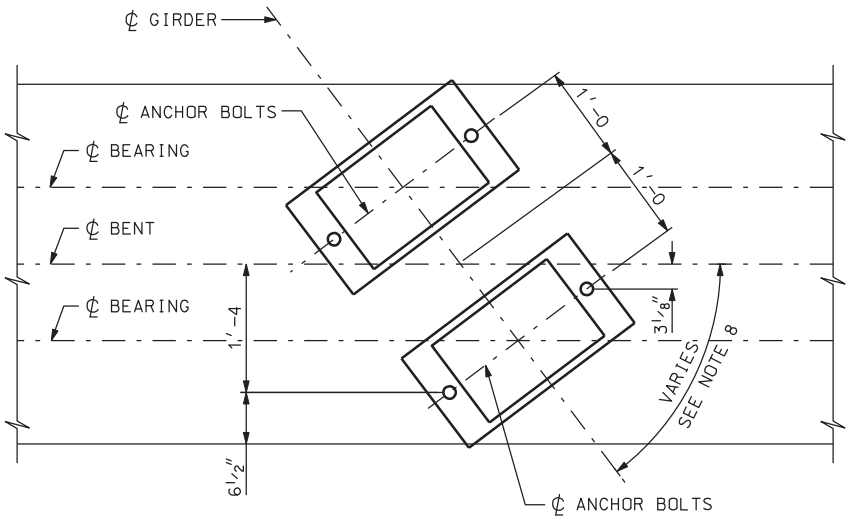


## ANCHOR BOLT LOCATION DIAGRAM (BENT)

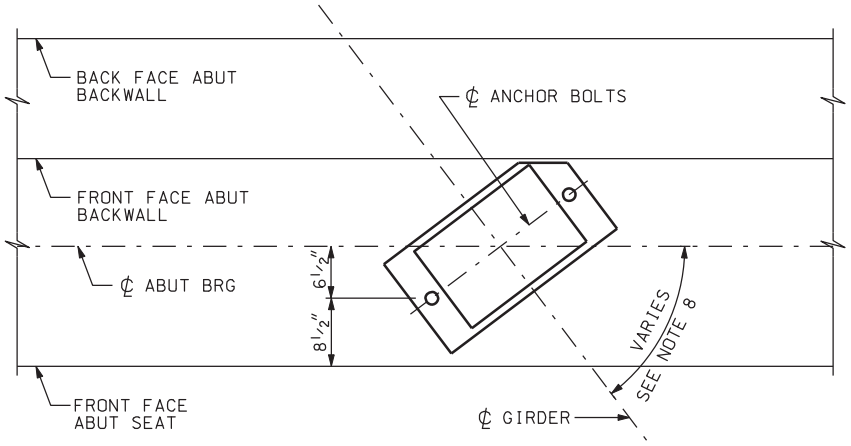


## ANCHOR BOLT LOCATION DIAGRAM (ABUTMENT)

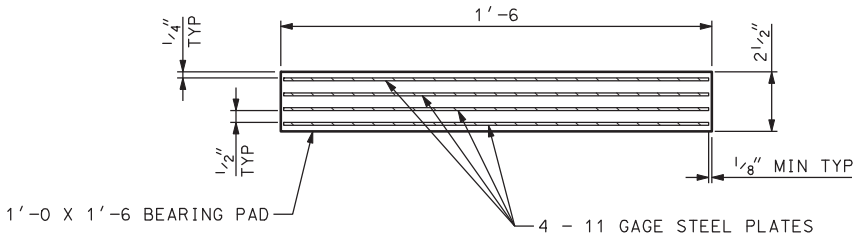


## BEARING PAD DETAIL

RING SEAT

## NOTES

FOR ANCHOR BOLT AND BEARING ASSEMBLIES IS INCLUDED
CONTRACT PRICE FOR STRUCTURAL STEEL.

ER FOR BEARING PADS HARDNESS 50.

M F-1154 GRADE 36 ANCHOR BOLTS.

ZE NUTS, WASHERS, AND ANCHOR BOLTS IN ACCORDANCE WITH AASHTO
STM A153). ALL GALVANIZED STEEL THREADS ARE TO BE FREE FROM
ALLOWING NUTS TO BE FREE RUNNING BY HAND FOR THE ENTIRE LENGTH
ADS.

CHOR BOLT SOLE PLATE HOLES WITH SILICONE JOINT SEALER.

ATES SHALL BE BEVELED TO MATCH GRADE OF FINISHED ROADWAY.

ED FABRIC PAD SHALL CONFORM TO ARTICLE 18.10.2 (DIVISION II,
CTION) OF CURRENT AASHTO SPECIFICATIONS.

KEW OF EXISTING ABUTMENTS AND PIERS. SEE "FOUNDATION PLAN" SHEET.

| NO. | DATE | BY | REMARKS |
|---|---|---|---|

REVISIONS

UTAH DEPARTMENT OF TRANSPORTATION
SALT LAKE CITY, UTAH
HDR ENGINEERING, INC.

DESIGN RDH 11/04 CHECK GCG 11/04
DRAWN JG 11/04 CHECK RDH 11/04
QUANT. RDH 11/04 CHECK GCG 11/04

APPROVAL RECOMM. DATE SENIOR DESIGN ENGR.
APPROVED FOR USE BY UDOT DATE UDOT BRIDGE ENGR.

I-15; CORRIDOR IN UTAH COUNTY
I-15 OVER 300 WEST IN AMERICAN FORK
BEARING DETAILS
PROJECT NUMBER SP-15-6(52)241

UTAH
COUNTY

C-345W
DRG. NO.

SHT. 16 OF 26

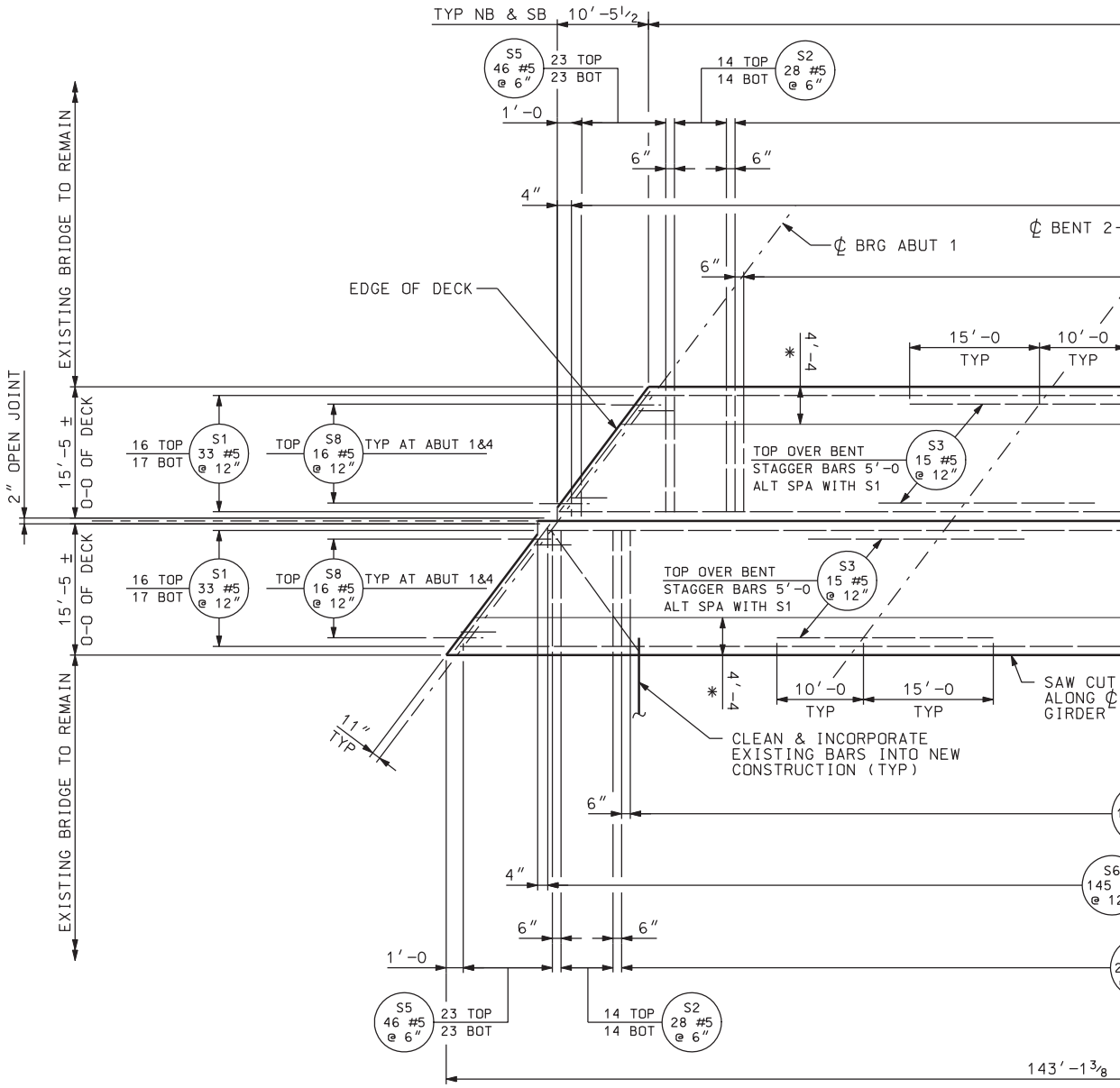


## PLAN

* CLOSURE P

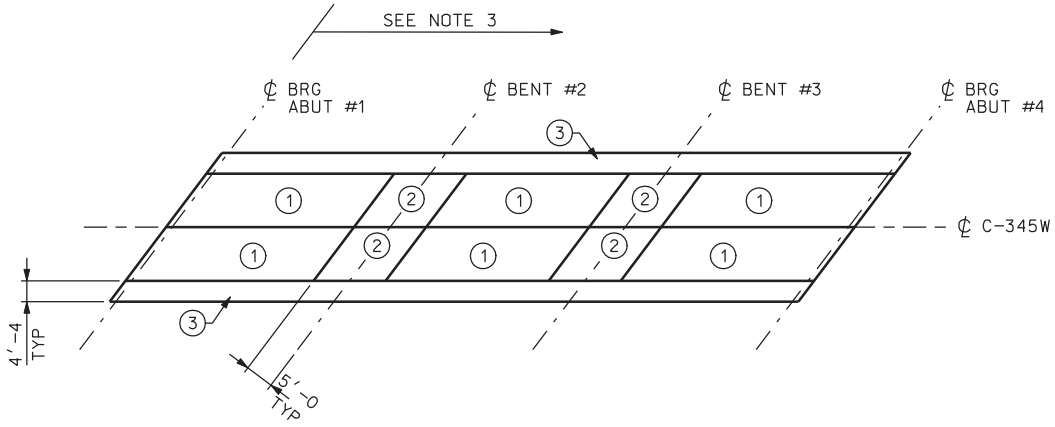


## POUR SEQUENCE

(4) SEQUENCE NUMBER

DGN File: IP_PWP:dms1717\44433_C-345-17_DCKSLB01.dgn
02-MAY-2005

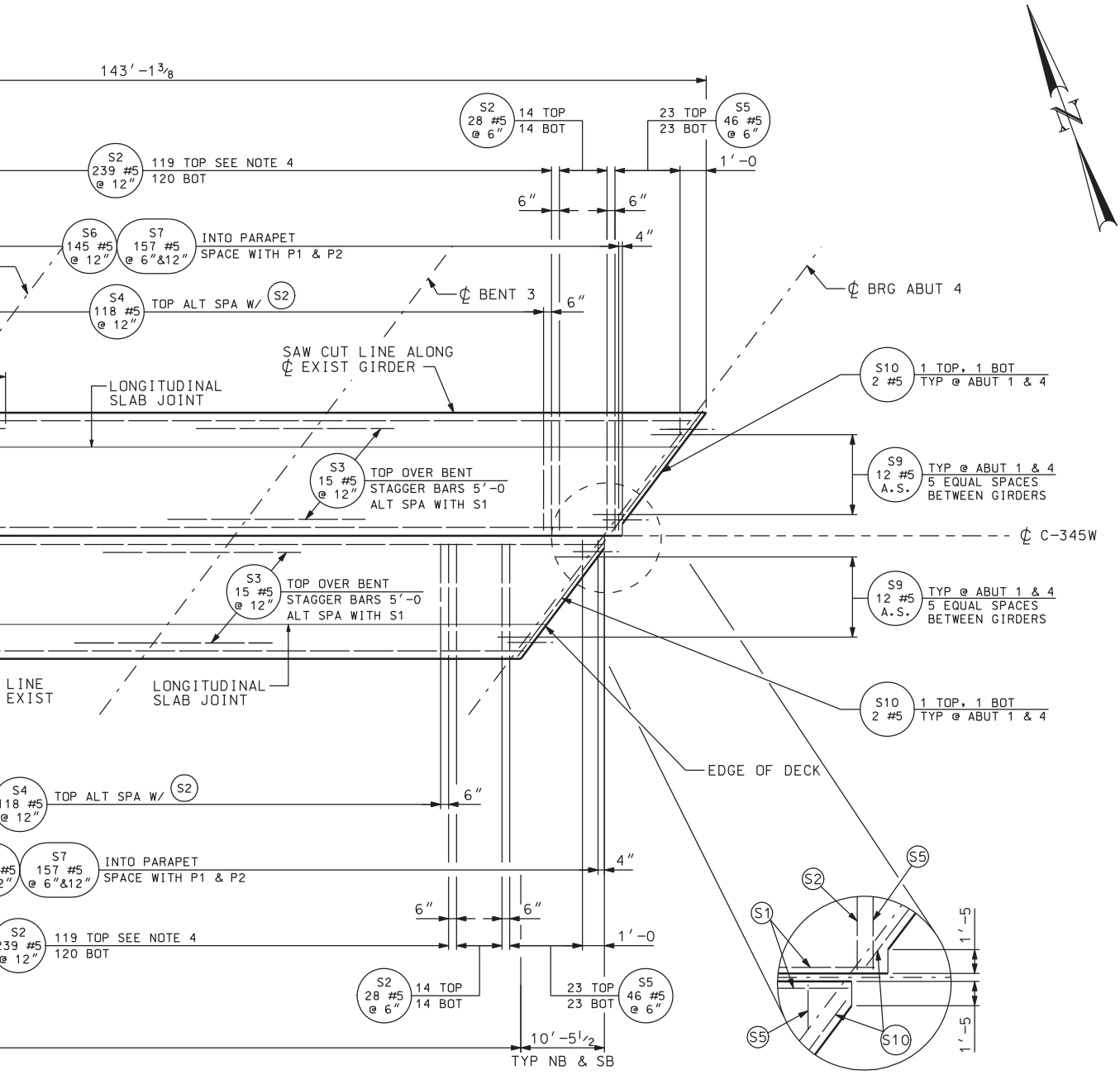


NOTES:

1. S6, S7, S8 & S9 BARS NOT SHOWN FOR CLARITY.
2. FIELD CUT OR BEND S10 BARS AT ACUTE CORNERS.

## NOTES

1. PLACE DECK IN SECTIONS AND SEQUENCE INDICATED.
2. CONTRACTOR MAY SUBMIT ALTERNATE PROCEDURES FOR APPROVAL.
3. ARROW DENOTES DIRECTION OF PLACEMENT.
4. DECK PLACEMENT SEQUENCES 1 AND 2 CAN BE COMBINED WITH APPROVAL FROM THE ENGINEER.
5. SEE "DECK SECTIONS" FOR ADDITIONAL REINFORCEMENT.
6. SEE "PARAPET DETAILS" FOR PARAPET REINFORCEMENT.
7. MINIMUM LAP LENGTH FOR S1 BARS: #5 BAR 2′-6. STAGGER SPLICES SUCH THAT NO MORE THAN 50% OF S1 BARS ARE SPLICED AT A GIVEN LOCATION (TAKEN NORMAL TO ℄ C-345W).
8. STAGGER TOP AND BOTTOM S1 AND S2 BARS WHERE 12″ SPACING IS REQUIRED.

| QUANTITIES STRUCTURAL CONCRETE | |
|---|---|
| DECK NB & SB | 128.4 CY |

| NO. | DATE | BY | REMARKS |
|---|---|---|---|
| | | | |

REVISIONS

UTAH DEPARTMENT OF TRANSPORTATION
SALT LAKE CITY, UTAH
HDR ENGINEERING, INC.

DESIGN RDH 11/04 CHECK GCG 11/04
DRAWN JG 11/04 CHECK RDH 11/04
QUANT. RDH 11/04 CHECK GCG 11/04

APPROVAL RECOMM. DATE SENIOR DESIGN ENGR.
APPROVED FOR USE BY UDOT DATE UDOT BRIDGE ENGR.

I-15; CORRIDOR IN UTAH COUNTY
I-15 OVER 300 WEST IN AMERICAN FORK
DECK SLAB PLAN

PROJECT NUMBER SP-15-6(52)241

UTAH
COUNTY

C-345W
DRG. NO.

SHT. 17 OF 26

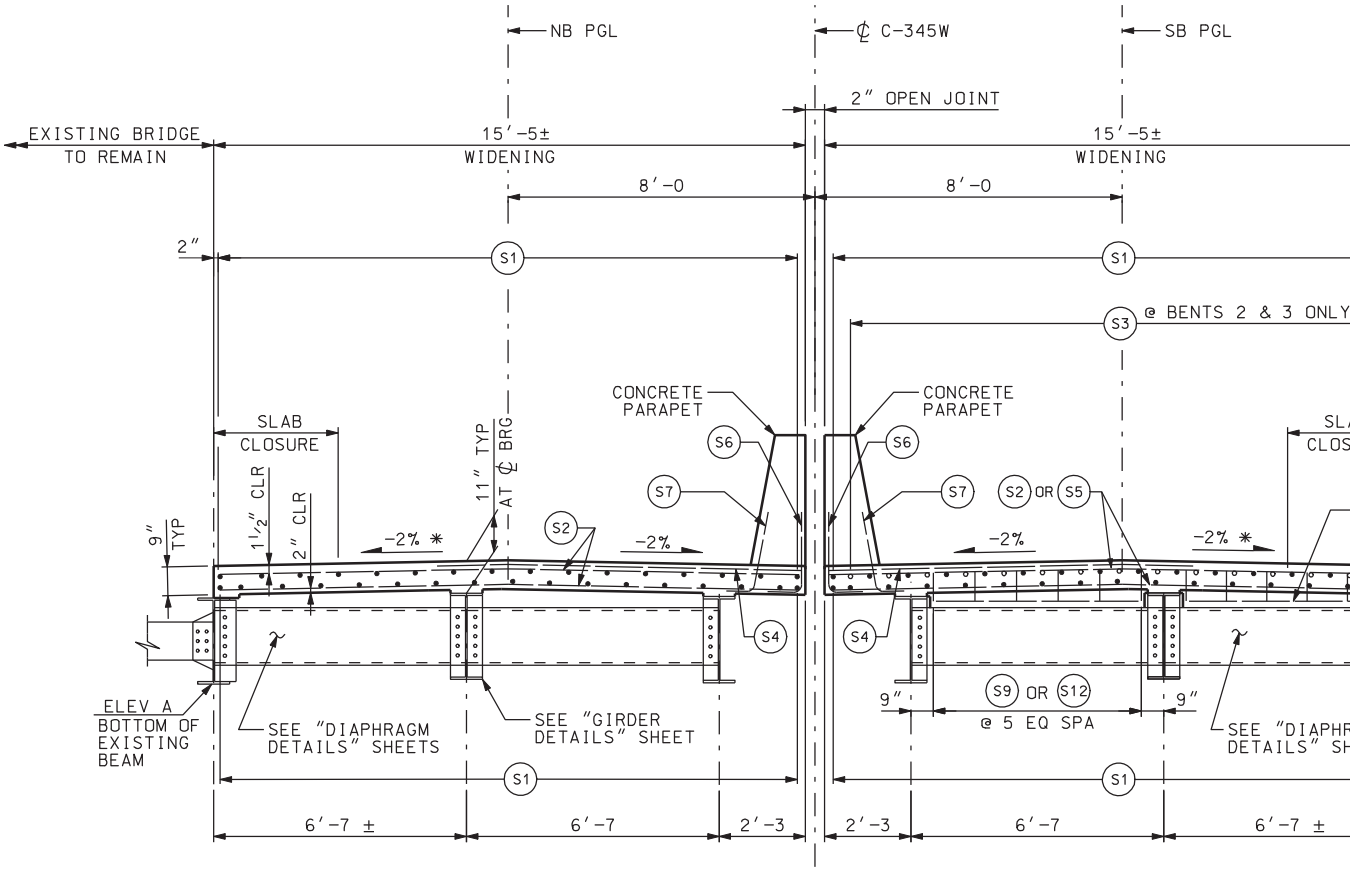


## TYPICAL CROSS SECTION

* VERIFY EXISTING CROSS SLOPE
MATCH EXISTING CROSS SLOPE

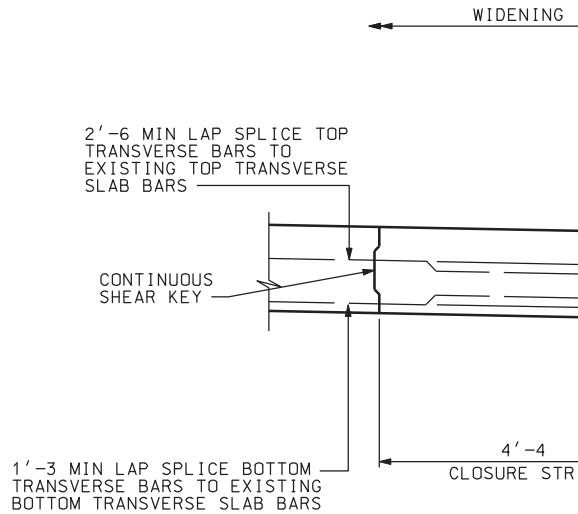


## SLAB C

| TABULATED ELEVATIONS | | |
|---|---|---|
| | ELEV A | ELEV B |
| BENT #2N | 4530.66 | 4530.86 |
| BENT #2S | 4530.64 | 4530.80 |

FIELD VERIFY THE EXISTING BOTTOM OF BEAM ELEVATIONS ADJACENT TO THE WIDENED PORTIONS OF THE STRUCTURE. CONTACT THE ENGINEER IF THE DISCREPANCY BETWEEN THE SURVEYED AND DETAILED ELEVATIONS EXCEEDS 1". THE ELEVATIONS SHOWN ARE BASED ON SURVEYED ELEVATIONS AT THE NORTH (N) OR SOUTH (S) FACE OF BENT CAP.

DGN File: IP_PWP:dms1717\4433_C-345-18_DECK02.dgn
02-MAY-2005

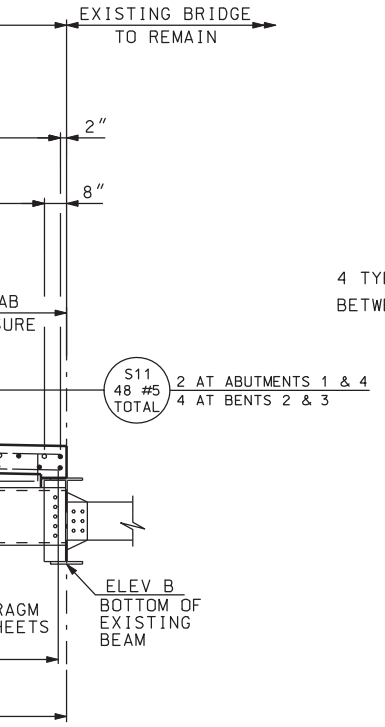


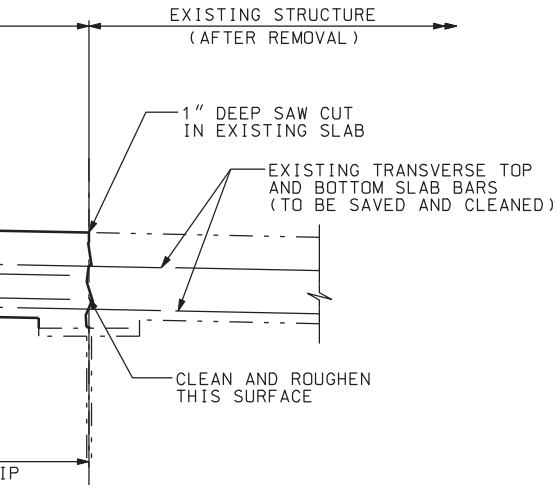


CLOSURE

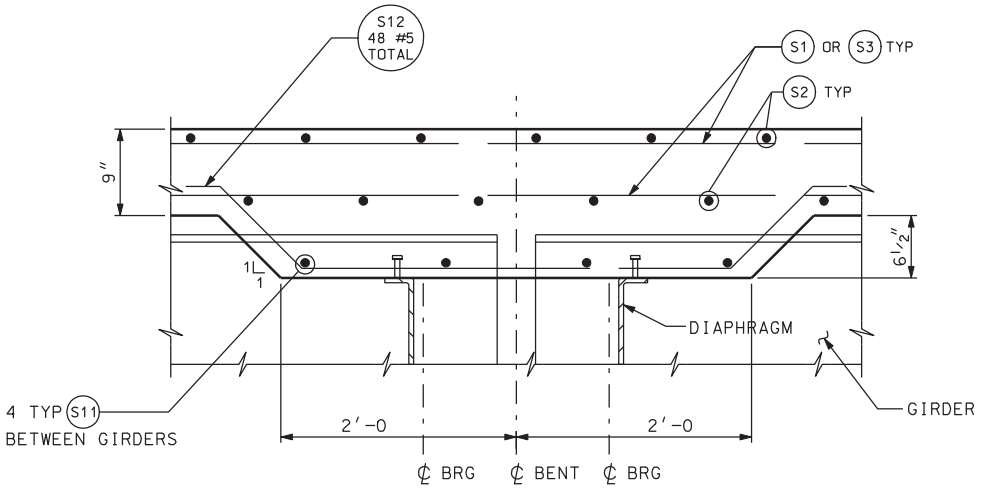


CONTINUOUS BEARING

BENTS 2 & 3

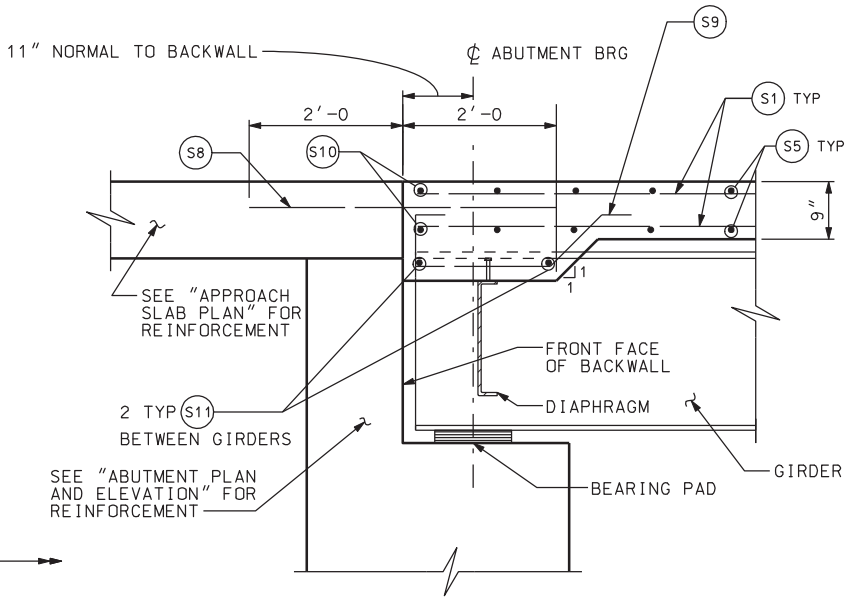


SECTION THRU END DIAPHRAGM

| NO. | DATE | BY | REMARKS |
|---|---|---|---|

REVISIONS

UTAH DEPARTMENT OF TRANSPORTATION
SALT LAKE CITY, UTAH
HDR ENGINEERING, INC.

DESIGN RDH 11/04 CHECK GCG 11/04
DRAWN JG 11/04 CHECK RDH 11/04
QUANT. RDH 11/04 CHECK GCG 11/04

APPROVAL RECOMM. DATE SENIOR DESIGN ENGR.
APPROVED FOR USE BY UDOT DATE UDOT BRIDGE ENGR.

I-15; CORRIDOR IN UTAH COUNTY
I-15 OVER 300 WEST IN AMERICAN FORK
DECK SECTIONS

PROJECT NUMBER SP-15-6(52)241

UTAH
COUNTY

C-345W
DRG. NO.

SHT. 18 OF 26

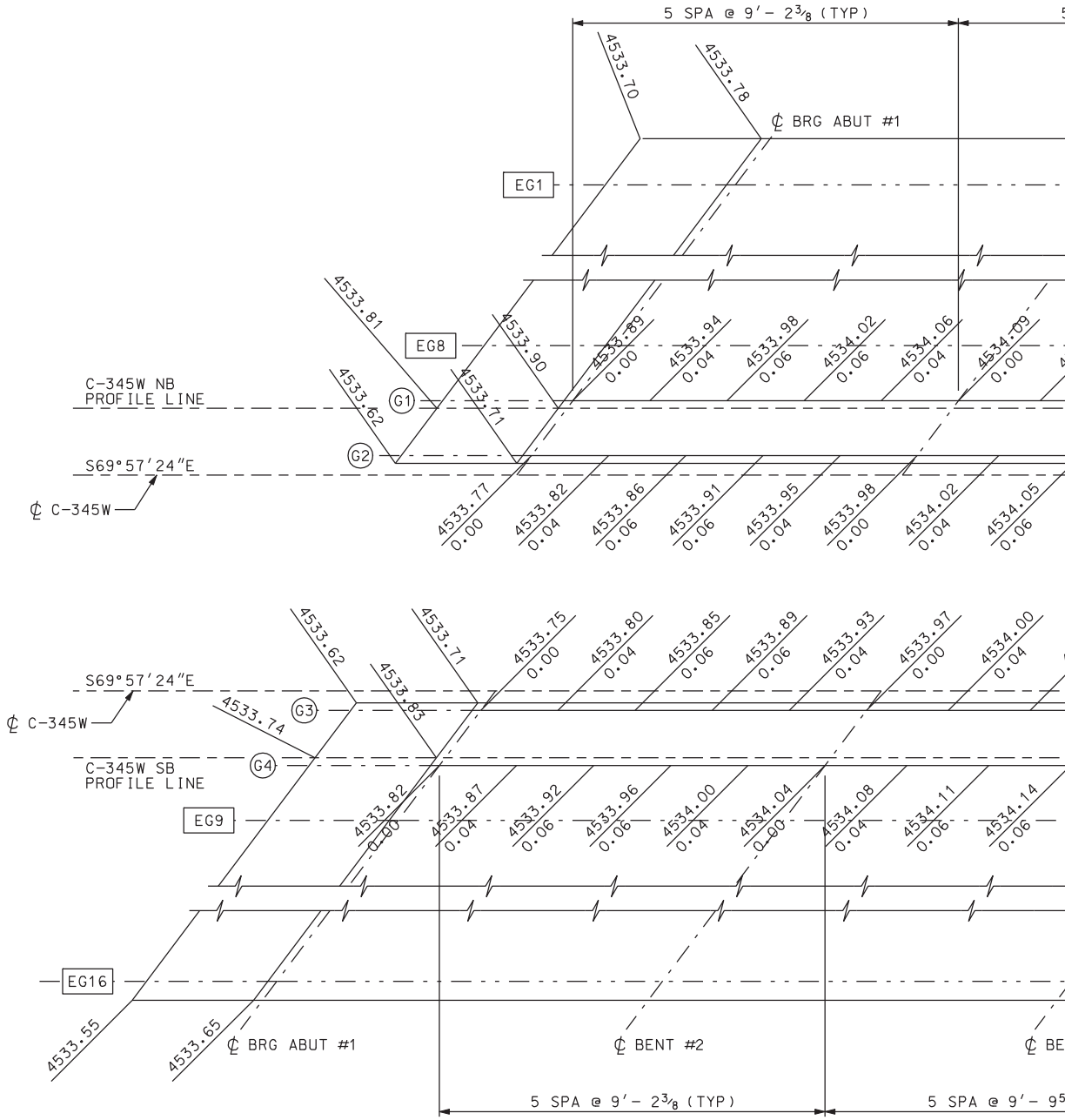


## SCREED ELEVATIO

## NOTES

1. SCREED ELEVATIONS MAY BE CALCULATED BY ADDING DEAD LOAD DEFLECTIONS TO TOP OF CONCRETE ELEVATIONS.
2. ALL ELEVATIONS ARE AT FINISH GRADE.
3. ALL LONGITUDINAL DIMENSIONS ARE TYPICAL ALONG GIRDER LINES. ALL GIRDERS ARE PARALLEL TO BEARING S69°57′24″E.
4. ALL ELEVATIONS SHOWN ON THIS SHEET ARE IN FEET.

DGN File: IP_PWP:dms1717\4433_C-345-19_SCREED.dgn
02-MAY-2005

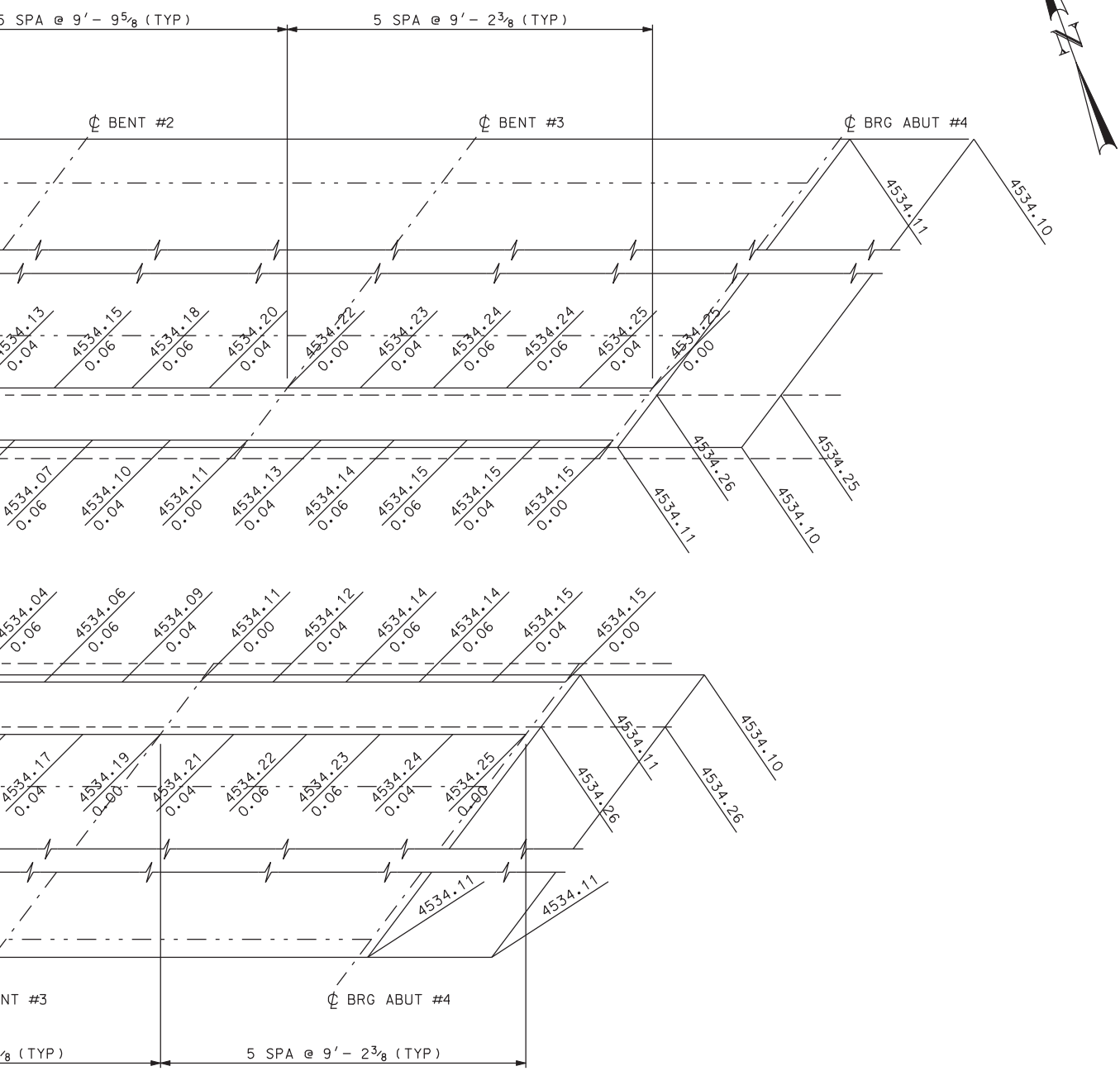


ON

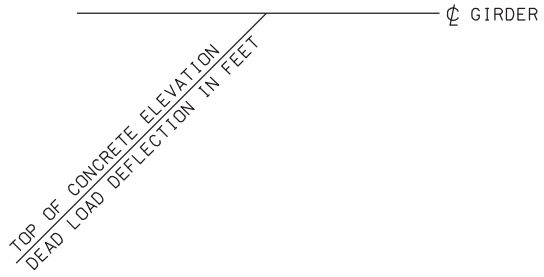


KEY PLAN

| NO. | DATE | BY | REMARKS |
|---|---|---|---|

REVISIONS

UTAH DEPARTMENT OF TRANSPORTATION
SALT LAKE CITY, UTAH
HDR ENGINEERING, INC.

DESIGN RDH 11/04 CHECK GCG 11/04
DRAWN JG 11/04 CHECK RDH 11/04
QUANT. RDH 11/04 CHECK GCG 11/04

APPROVAL RECOMM. DATE SENIOR DESIGN ENGR.
APPROVED FOR USE BY UDOT DATE UDOT BRIDGE ENGR.

I-15; CORRIDOR IN UTAH COUNTY
I-15 OVER 300 WEST IN AMERICAN FORK
SCREED ELEVATIONS

PROJECT NUMBER SP-15-6(52)241

UTAH
COUNTY

C-345W
DRG. NO.

SHT. 19 OF 26

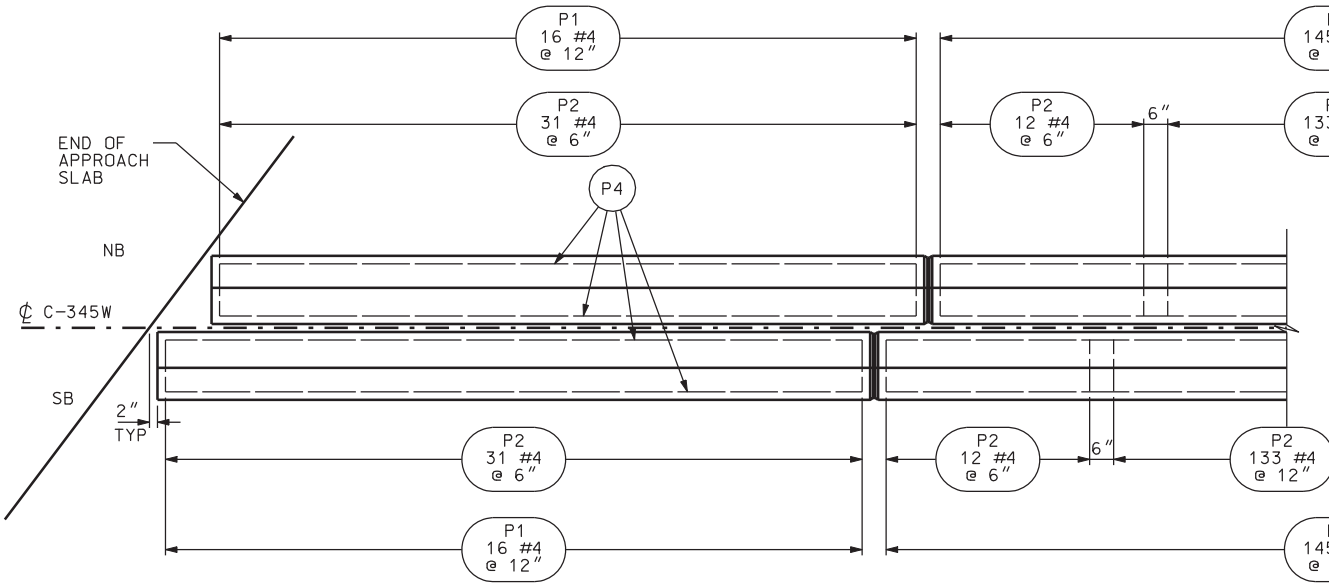


PL

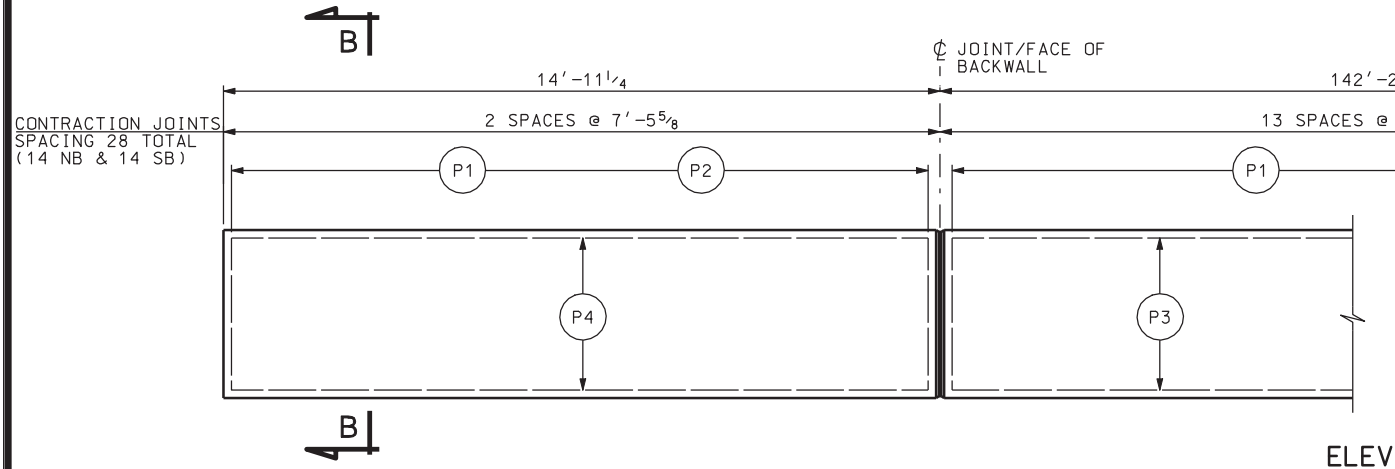


ELEV

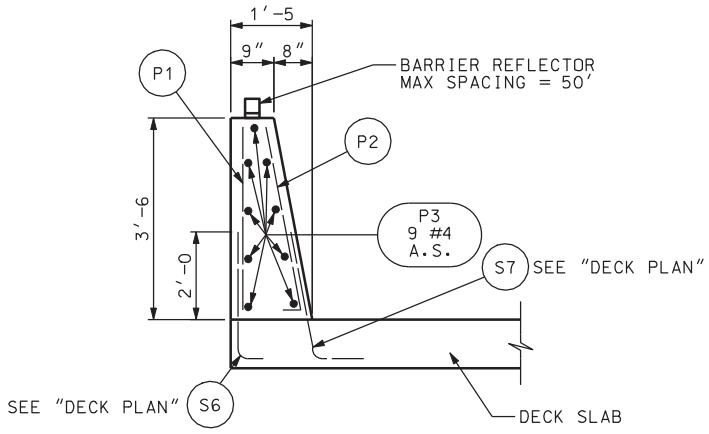


SECTION A-A

NB PARAPET SHOWN, SB SIMILAR

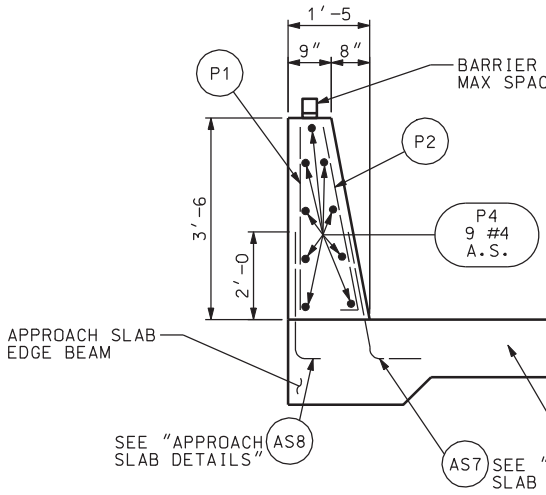


SECTION B-B

NB PARAPET SHOWN, SB SIMI

DGN File: IP_PWP:dms11717\44433_C-345-20_PARAPET01.dgn
02-MAY-2005

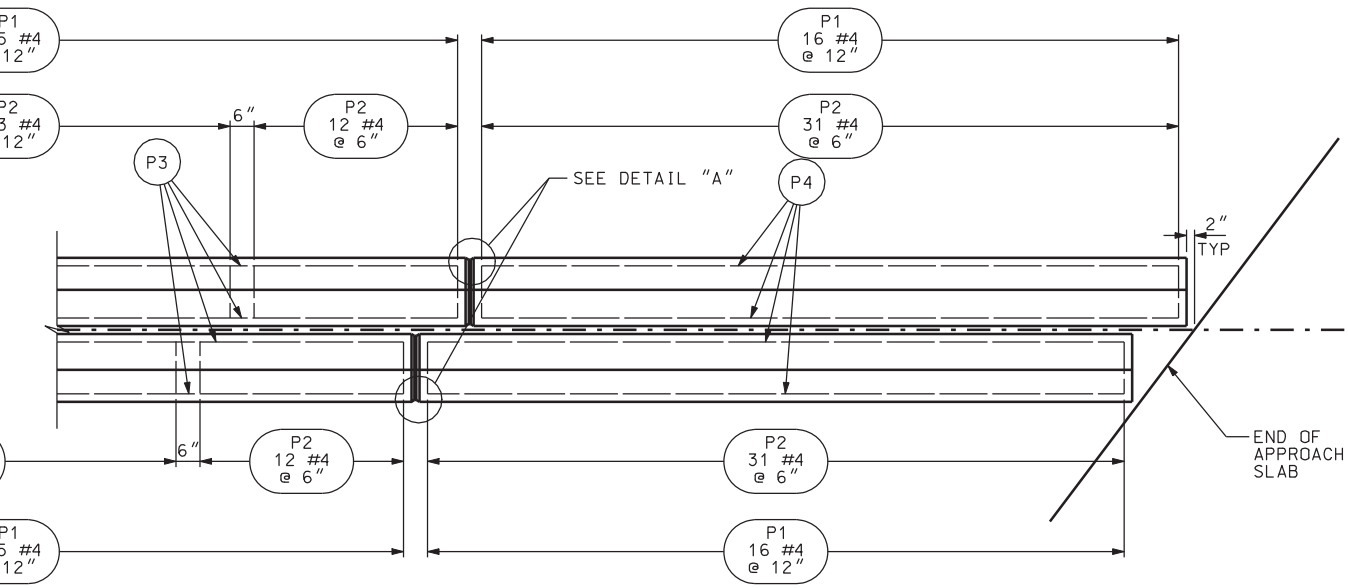


AN

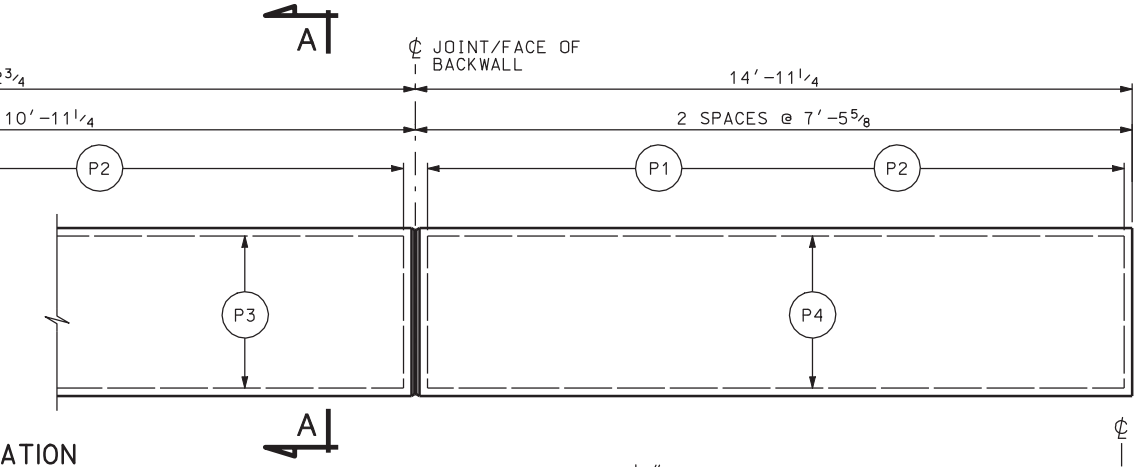


ATION

REFLECTOR
ING = 50'

APPROACH SLAB

APPROACH
DETAILS"

LAR

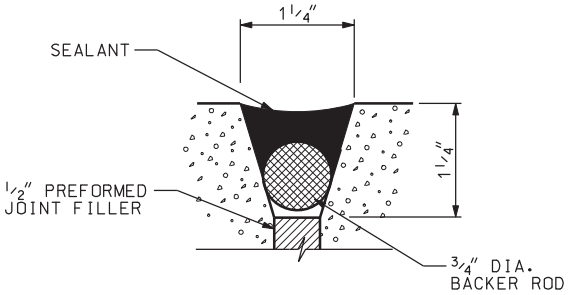


## DETAIL "A"

AT END OF BRIDGE DECK

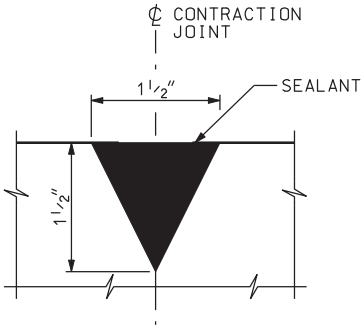


## DETAIL "B"

CONTRACTION JOINT

## GENERAL NOTES

1. ALTERNATE ALL REINFORCING STEEL SPLICES.
2. USE 2" MIN. COVER TO REINFORCING STEEL UNLESS NOTED OTHERWISE.
3. PLACE CONTRACTION JOINT ON TOP AND SIDES OF PARAPET.
4. EXTEND SEALANT AND FOAM BACKER ROD FROM DECK TOP TO TOP OF PARAPET ON THE INSIDE PARAPET FACE, AND ACROSS TOP OF PARAPET.
5. ADJUST BAR SPACING AS REQUIRED TO NOT EXCEED MAXIMUM SPACING SHOWN.
6. FOR END DETAILS OF PARAPET, SEE "PARAPET END DETAILS" SHEET.

| QUANTITIES STRUCTURAL CONCRETE | |
|---|---|
| QUANTITIES FOR ALL PARAPETS | 48.3 CY |

| NO. | DATE | BY | REMARKS |
|---|---|---|---|
| | | | |

REVISIONS

UTAH DEPARTMENT OF TRANSPORTATION
SALT LAKE CITY, UTAH
HDR ENGINEERING, INC.

DESIGN RDH 11/04 CHECK GCG 11/04
DRAWN JG 11/04 CHECK RDH 11/04
QUANT. RDH 11/04 CHECK GCG 11/04

APPROVAL RECOMM. DATE SENIOR DESIGN ENGR.
APPROVED FOR USE BY UDOT DATE UDOT BRIDGE ENGR.

I-15; CORRIDOR IN UTAH COUNTY
I-15 OVER 300 WEST IN AMERICAN FORK
PARAPET DETAILS

PROJECT NUMBER SP-15-6(52)241

UTAH
COUNTY

C-345W
DRG. NO.

SHT. 20 OF 26

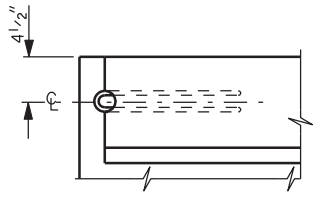


PLAN

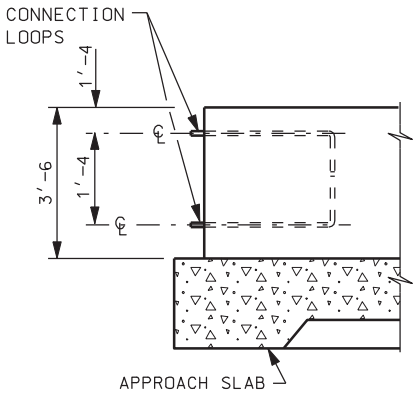


ELEVATION

STANDARD END DETAILS

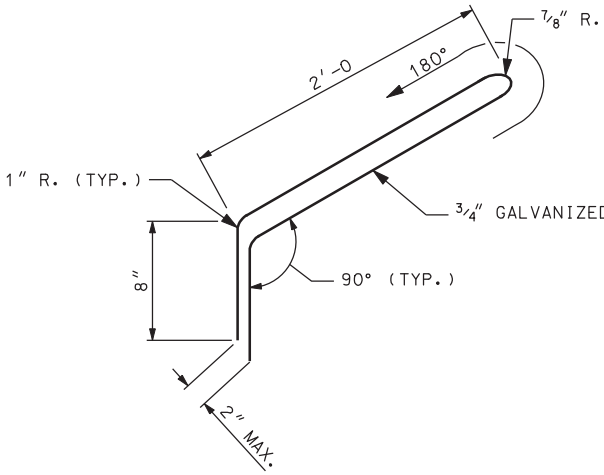


CONNECTION LOOP DETAIL

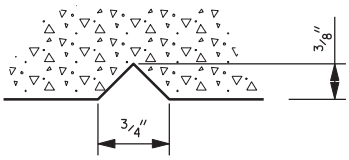


TYPICAL SECTION

THRU STRUCTURE NUMBER

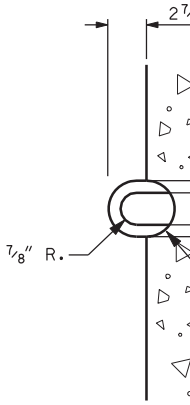


CON

DGN File: IP_PWP:dms1717\4433_C-345-21_PAREND01.dgn

02-MAY-2005

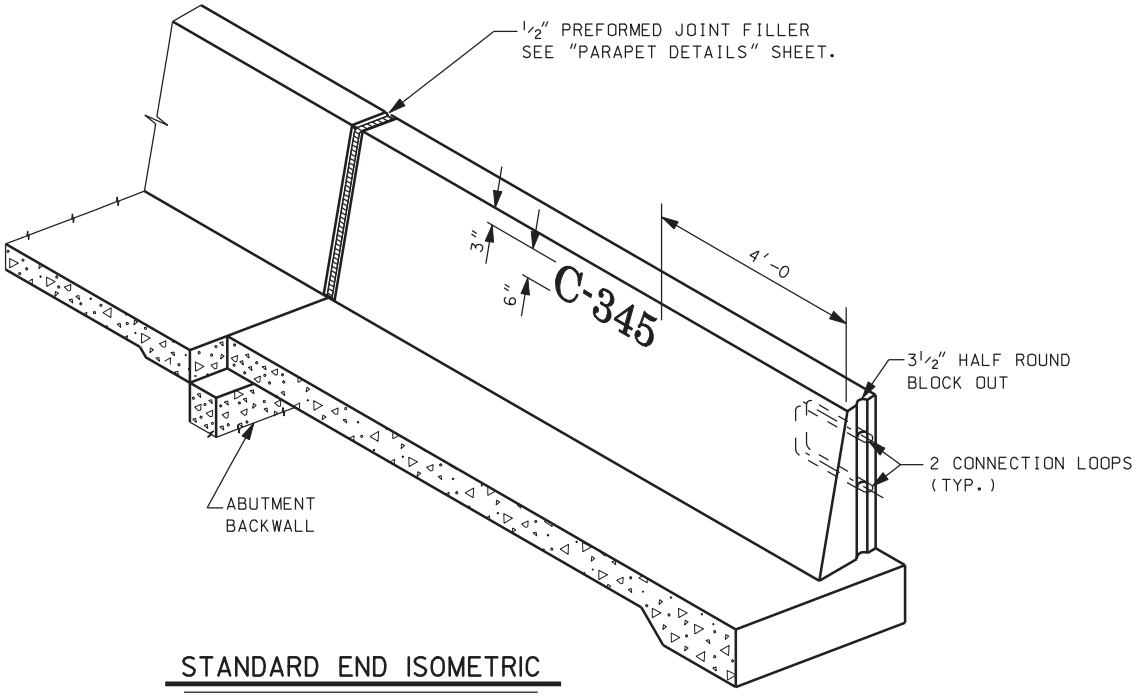


STANDARD END ISOMETRIC

D STEEL BAR

8"

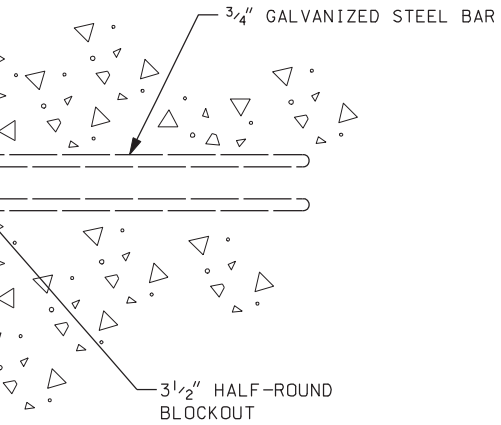


NECTION BAR END DETAIL

## NOTES

1. INSTALL CONNECTION LOOPS AT ALL PARAPET ENDS.
2. CONNECTION LOOPS NOT INCLUDED IN REINFORCING STEEL SCHEDULE.
3. SEE ROADWAY SHEET DT-08 FOR TRANSITION DETAIL FROM SINGLE SLOPE PARAPET TO PRECAST JERSEY BARRIER.

| NO. | DATE | BY | REMARKS |
|---|---|---|---|

REVISIONS

UTAH DEPARTMENT OF TRANSPORTATION
SALT LAKE CITY, UTAH
HDR ENGINEERING, INC.

DESIGN RDH 10/04 CHECK GCG 10/04
DRAWN JG 10/04 CHECK RDH 10/04
QUANT. RDH 10/04 CHECK GCG 10/04

APPROVAL RECOMM. DATE SENIOR DESIGN ENGR.
APPROVED FOR USE BY UDOT DATE UDOT BRIDGE ENGR.

I-15; CORRIDOR IN UTAH COUNTY
I-15 OVER 300 WEST IN AMERICAN FORK
PARAPET END DETAILS
PROJECT NUMBER SP-15-6(52)241

UTAH
COUNTY

C-345W
DRG. NO.

SHT. 21 OF 26

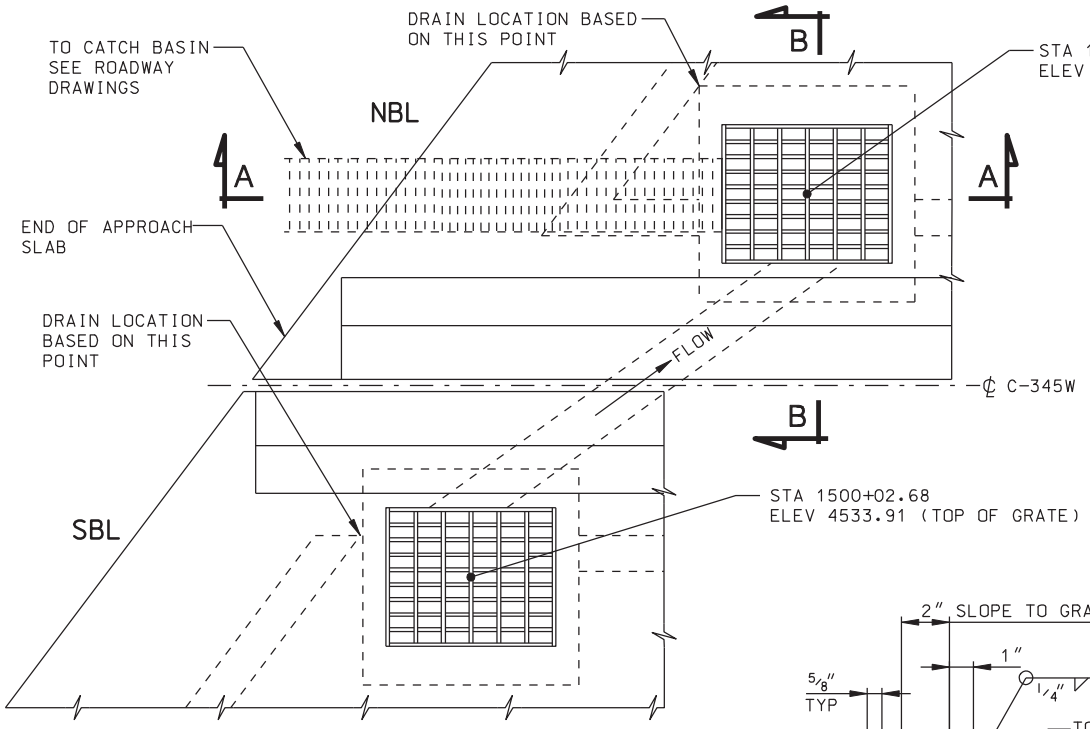


TYPICAL PLAN

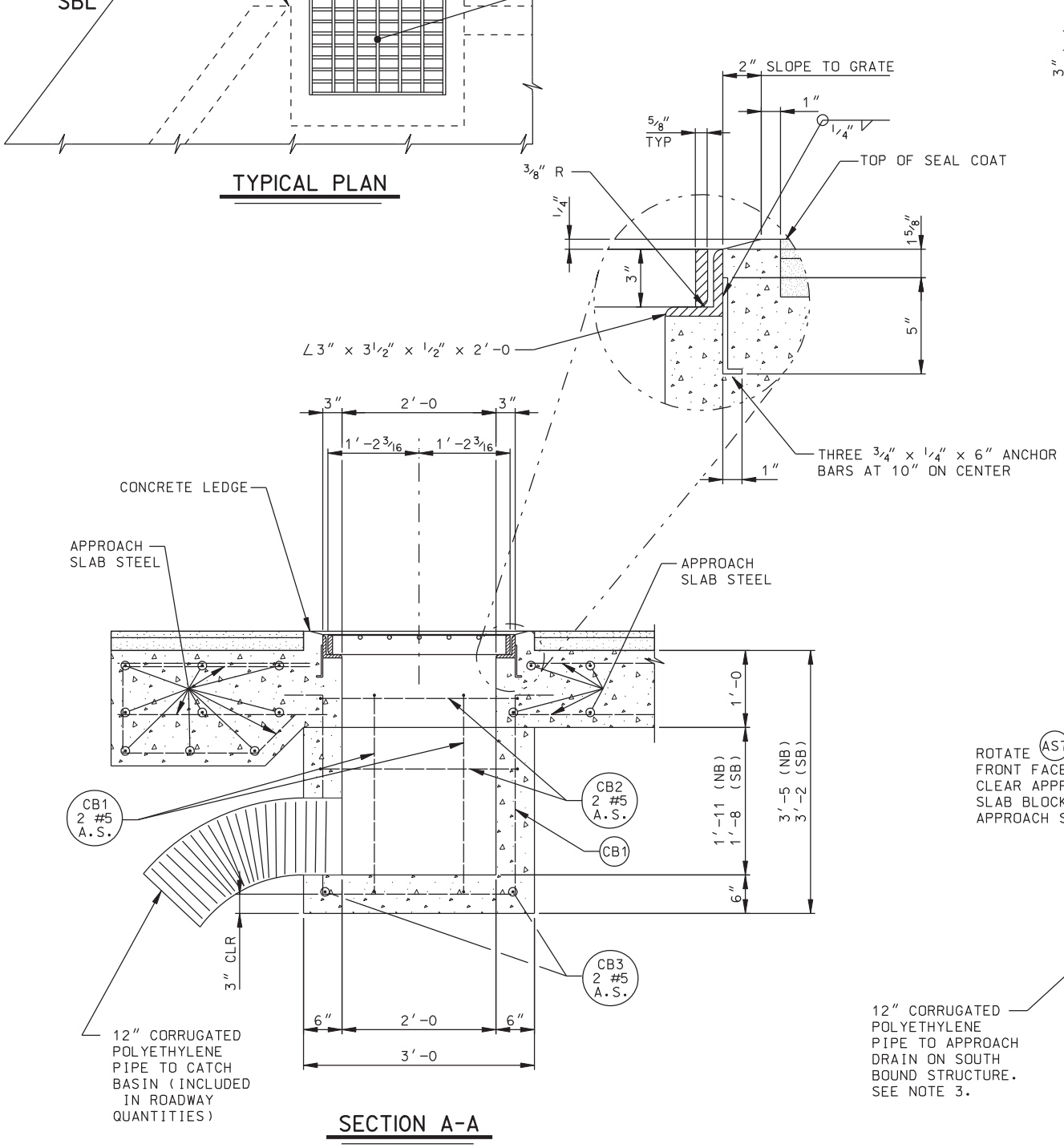


SECTION A-A

DGN File: IP_PWP:dms11717\4433_C-345-22_APPDRN01.dgn
02-MAY-2005

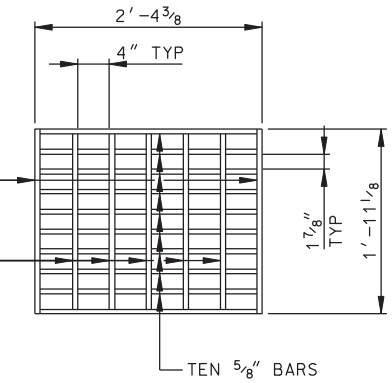


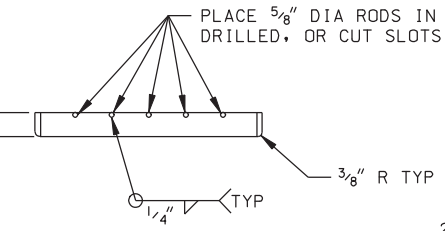


## GRATE DETAIL

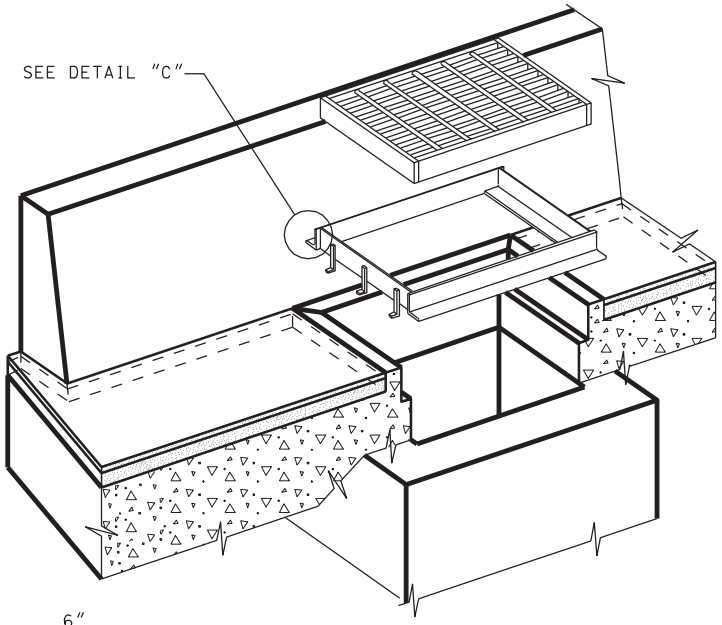


## ISOMETRIC

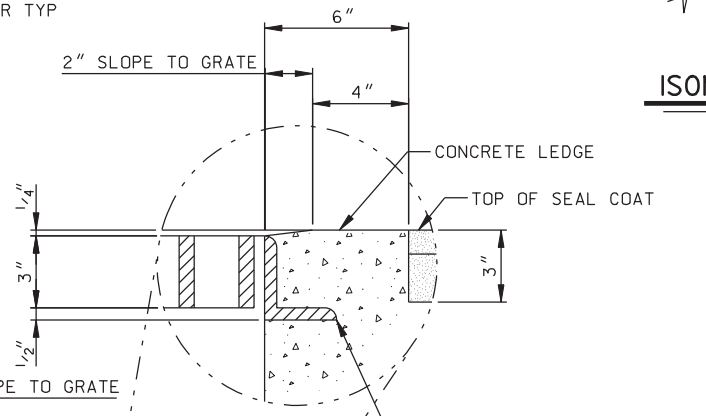


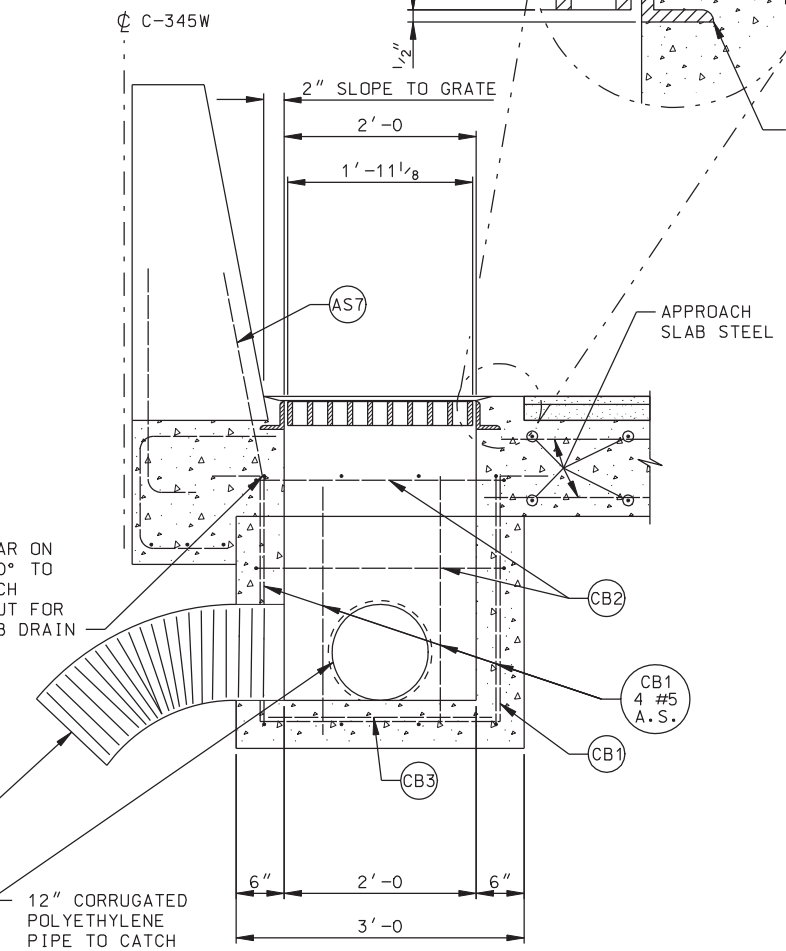


## SECTION B-B

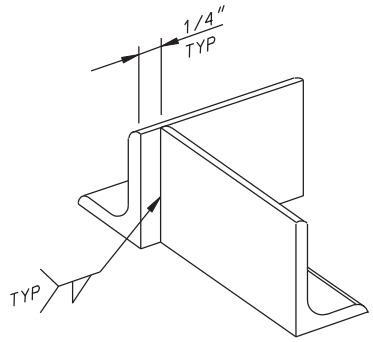


## DETAIL "C"

## GENERAL NOTES

1. FIELD CUT OR BEND APPROACH SLAB REINFORCING TO CLEAR APPROACH SLAB DRAINS.
2. STATION AND ELEVATION OF APPROACH SLAB DRAIN SHOWN AT CENTER AND TOP OF GRATE.
3. ADEQUATELY SLOPE PIPE BETWEEN THE SOUTHBOUND & NORTHBOUND APPROACH DRAINS.

| QUANTITIES STRUCTURAL CONCRETE | |
|---|---|
| 2 CATCH BASINS | 1.0 CY |
| **QUANTITIES STRUCTURAL STEEL** | |
| 2 GRATES & FRAMES | 546 LBS |

| NO. | DATE | BY | REMARKS |
|---|---|---|---|
| | | | |

REVISIONS

UTAH DEPARTMENT OF TRANSPORTATION
SALT LAKE CITY, UTAH
HDR ENGINEERING, INC.

DESIGN RDH 11/04 CHECK GCG 11/04
DRAWN JG 11/04 CHECK RDH 11/04
QUANT. RDH 11/04 CHECK GCG 11/04

APPROVAL RECOMM. DATE SENIOR DESIGN ENGR.
APPROVED FOR USE BY UDOT DATE UDOT BRIDGE ENGR.

I-15; CORRIDOR IN UTAH COUNTY
I-15 OVER 300 WEST IN AMERICAN FORK
APPROACH SLAB DRAIN DETAILS

PROJECT NUMBER SP-15-6(52)241

UTAH COUNTY

C-345W DRG. NO.

SHT. 22 OF 26

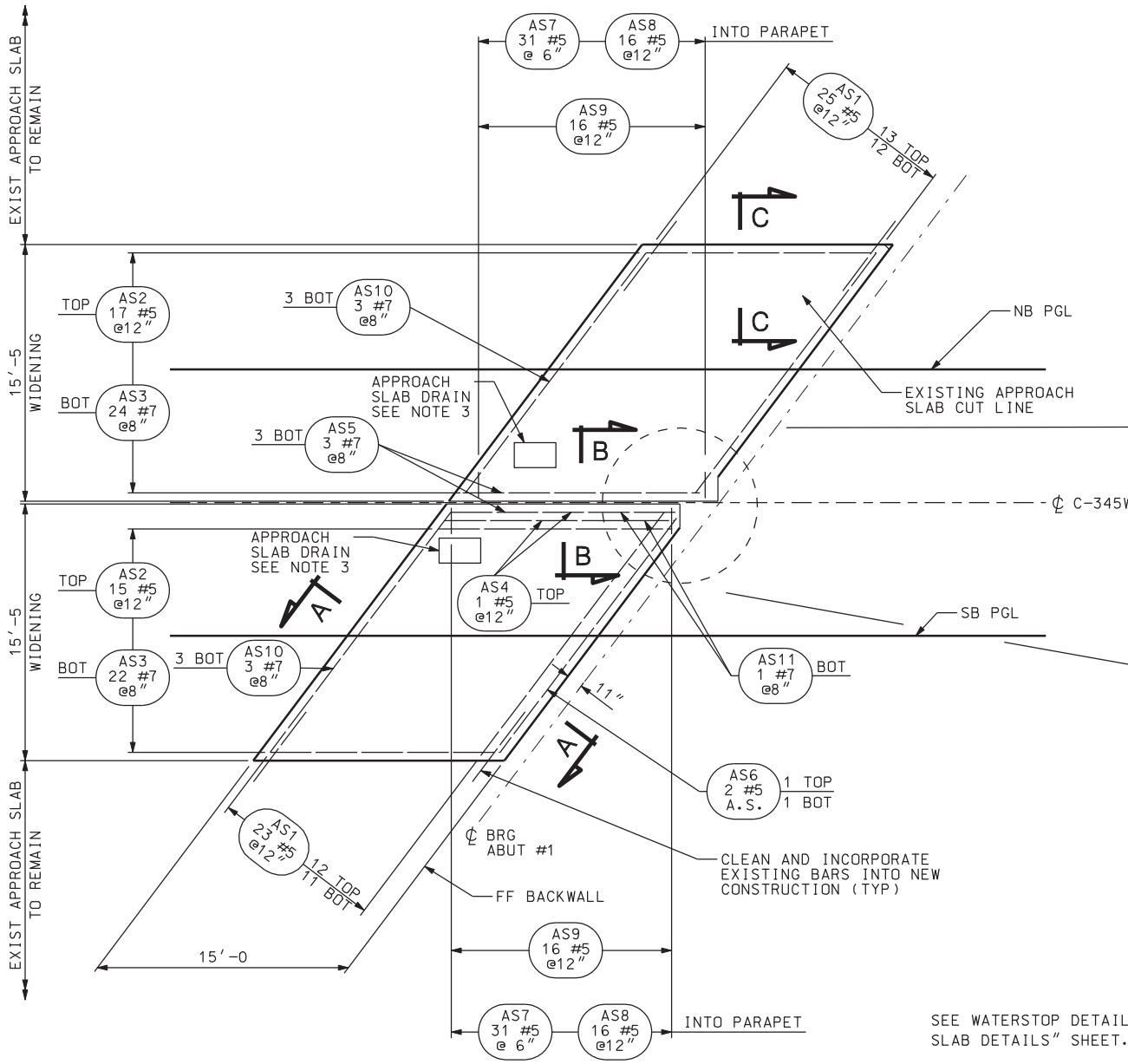


## PLAN

ABUT #1 APPROACH SLAB SHOWN.
ABUT #4 SIMILAR.

| APPROACH SLAB ELEVATIONS | | | | | | | | | | |
|---|---|---|---|---|---|---|---|---|---|---|
| | ELEV A | ELEV B | ELEV C | ELEV D | ELEV E | ELEV F | ELEV G | ELEV H | ELEV J | ELEV K |
| ABUT #1 | 4533.70 | 4533.78 | 4533.81 | 4533.90 | 4533.62 | 4533.71 | 4533.74 | 4533.83 | 4533.55 | 4533.65 |
| ABUT #4 | 4534.10 | 4534.11 | 4534.25 | 4534.26 | 4534.10 | 4534.11 | 4534.26 | 4534.26 | 4534.11 | 4534.11 |

## NOTES

1. APPROACH SLAB ELEVATIONS SHOWN ARE AT TOP OF CONCRETE.
2. SEE "APPROACH SLAB DETAILS" SHEET FOR SECTIONS B-B AND C-C.
3. SEE "APPROACH SLAB DRAIN DETAILS" SHEET FOR LOCATIONS OF DRAINS.
4. ADJUST ELEVATIONS SHOWN IN TABLE AT THE ENDS OF THE APPROACH SLABS TO MATCH THE EXISTING APPROACH SLAB ELEVATIONS.

DGN File: IP_PWP:dms11717\4433_C-345-23_APPROACH01.dgn
02-MAY-2005

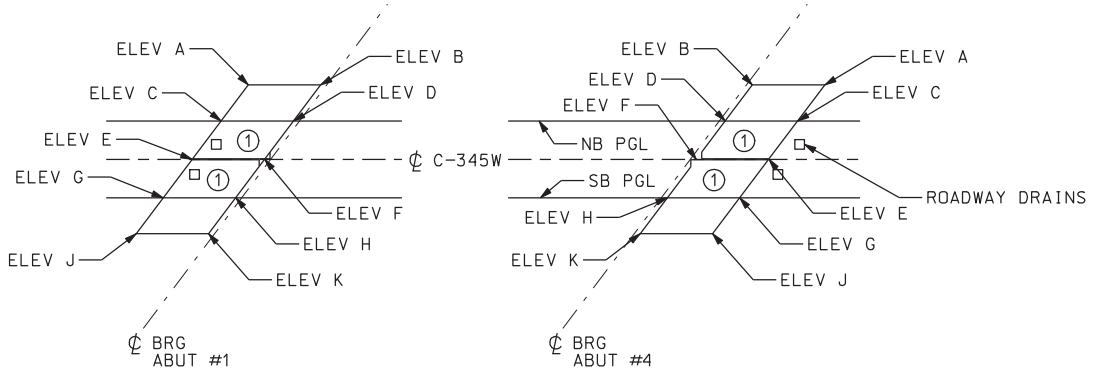


## KEY PLAN

(3) SEQUENCE NUMBER

NOTE: PLACE APPROACH SLAB IN SECTIONS AND SEQUENCE INDICATED. MATCH SEQUENCES SHOWN ON "DECK SLAB PLAN" SHEET. CONTRACTOR MAY SUBMIT ALTERNATE PROCEDURES FOR APPROVAL.

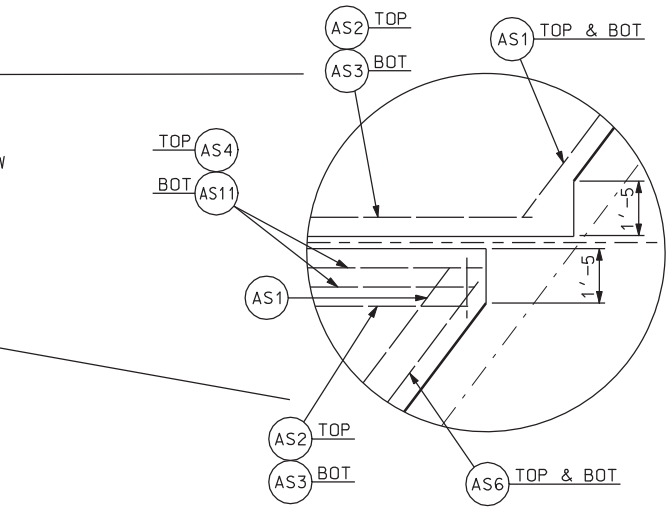


NOTES:

1. (AS5), (AS7), (AS8) & (AS9) BARS NOT SHOWN FOR CLARITY.
2. FIELD CUT OR BEND (AS6) BARS AT ACUTE CORNERS.

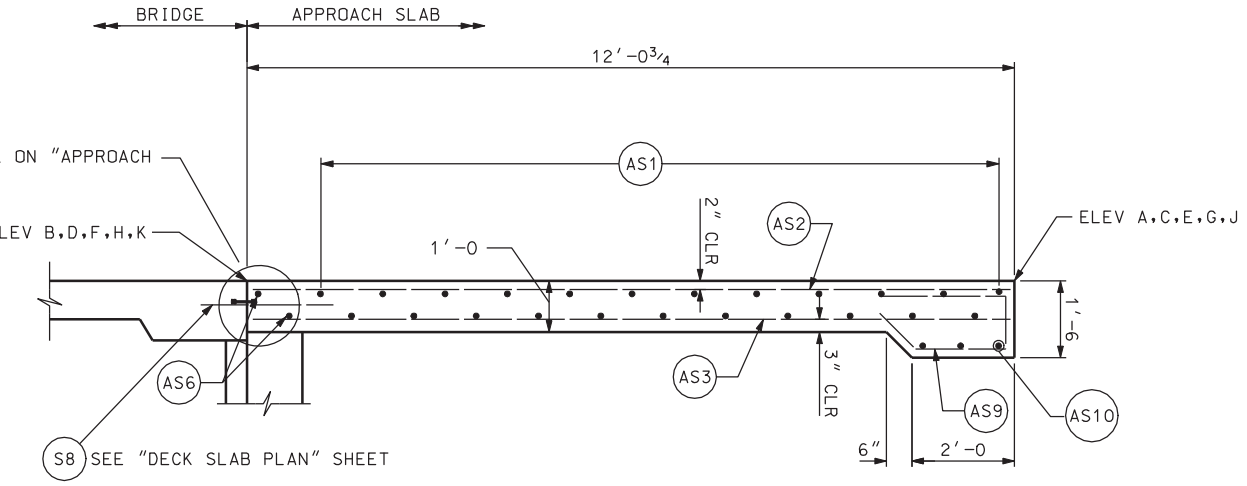


## SECTION A-A

| QUANTITIES | |
|---|---|
| STRUCTURAL CONCRETE | |
| APPROACH SLABS (4 LOCATIONS) | 32.8 CY |

| NO. | DATE | BY | REMARKS |
|---|---|---|---|
| | | | |

REVISIONS

UTAH DEPARTMENT OF TRANSPORTATION
SALT LAKE CITY, UTAH
HDR ENGINEERING, INC.

DESIGN RDH 11/04 CHECK GCG 11/04
DRAWN JG 11/04 CHECK RDH 11/04
QUANT. RDH 11/04 CHECK GCG 11/04

APPROVAL RECOMM. DATE SENIOR DESIGN ENGR.
APPROVED FOR USE BY UDOT DATE UDOT BRIDGE ENGR.

I-15; CORRIDOR IN UTAH COUNTY
I-15 OVER 300 WEST IN AMERICAN FORK
APPROACH SLAB PLAN

PROJECT NUMBER SP-15-6(52)241

UTAH COUNTY

C-345W DRG. NO.

SHT. 23 OF 26

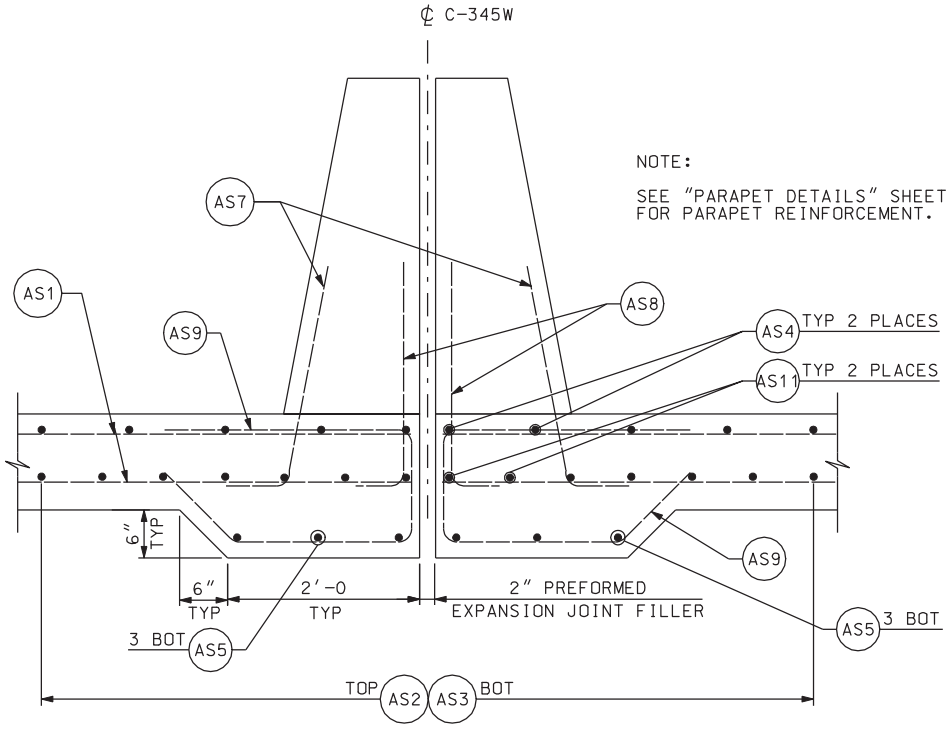


## SECTION B-B

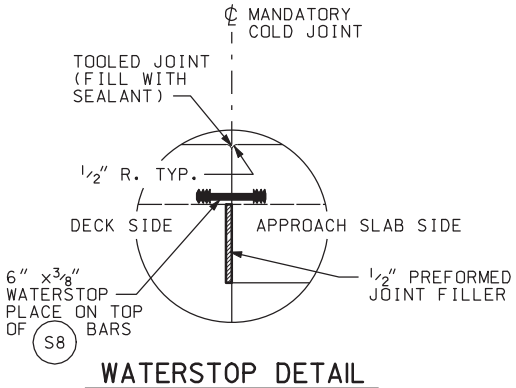


## WATERSTOP DETAIL

02-MAY-2005 DGN File: IP_PWP:dms11717\44433_C-345-24_APPROACH02.dgn

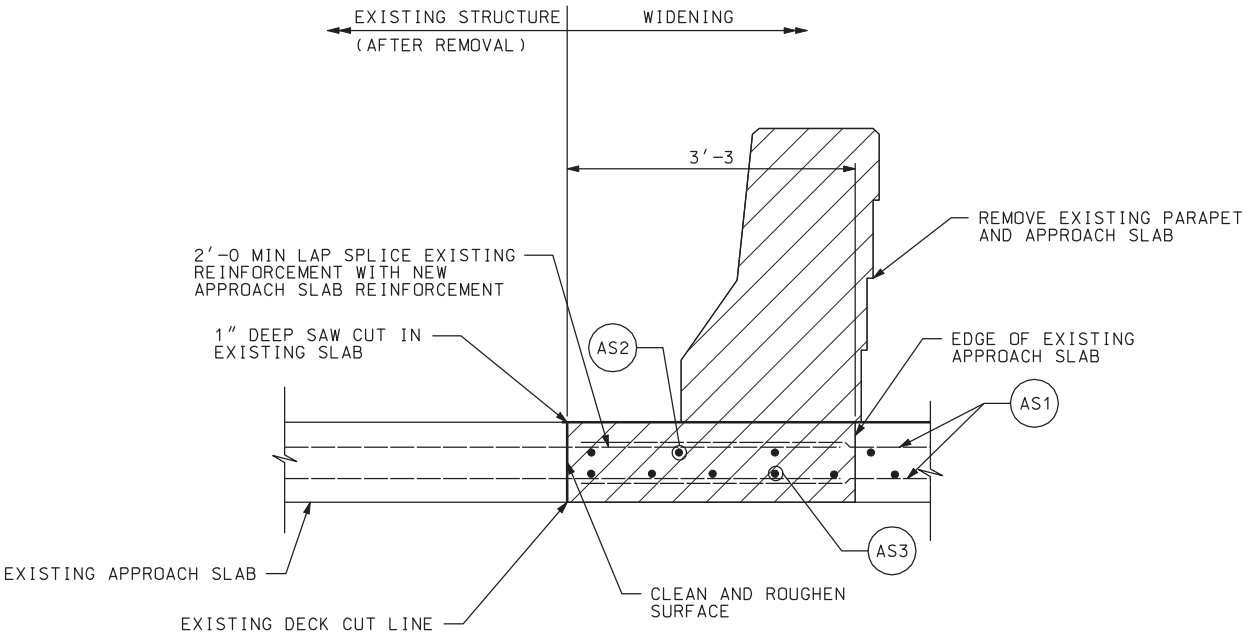


## SECTION C-C

| NO. | DATE | BY | REMARKS |
|---|---|---|---|
| | | | |

REVISIONS

UTAH DEPARTMENT OF TRANSPORTATION
SALT LAKE CITY, UTAH
HDR ENGINEERING, INC.

DESIGN RDH 11/04 CHECK GCG 11/04
DRAWN JG 11/04 CHECK RDH 11/04
QUANT. RDH 11/04 CHECK GCG 11/04

APPROVAL RECOMM. DATE SENIOR DESIGN ENGR.
APPROVED FOR USE BY UDOT DATE UDOT BRIDGE ENGR.

I-15; CORRIDOR IN UTAH COUNTY
I-15 OVER 300 WEST IN AMERICAN FORK
APPROACH SLAB DETAILS

PROJECT NUMBER SP-15-6(52)241

UTAH
COUNTY

C-345W
DRG. NO.

SHT. 24 OF 26

| MARK | LOCATION | SIZE NO. | NO. BARS | LENGTH | TOTAL LENGTH | SKETCH |
|---|---|---|---|---|---|---|
| B20 | BENT CAP | 5 | 12 | 8'-5 | 101'-0 | 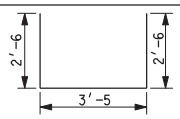  |
| B21 | BENT CAP | 8 | 40 | 9'-0 | 360'-0 | |
| B22 | BENT CAP | 5 | 12 | 7'-6 | 90'-0 | 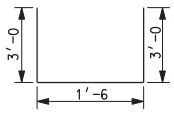  |
| B23 | BENT CAP | 9 | 32 | 20'-0 | 640'-0 | 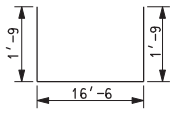  |
| B24 | BENT CAP | 9 | 32 | 16'-7 | 530'-8 | 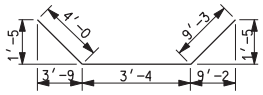  |
| B25 | BENT CAP | 5 | 24 | 16'-6 | 396'-0 | |
| B26 | BENT CAP | 5 | 8 | 22'-0 | 176'-0 | 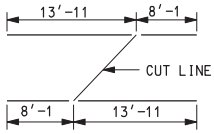  1 BAR(S) PER SET 8 SET(S) REQ'D |
| B27 | BENT CAP | 5 | 24 | 28'-4 | 680'-0 | 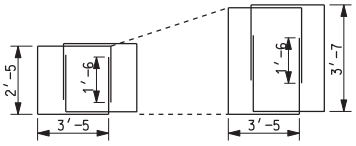  6 BAR(S) PER SET 4 SET(S) REQ'D |
| B28 | BENT CAP | 5 | 160 | 4'-2 | 666'-8 | 2 BAR(S) PER SET 80 SET(S) REQ'D 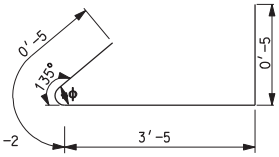  HOOK DIAMETER ϕ= 0'-2 |
| B29 | BENT CAP | 5 | 56 | 28'-8 | 1,605'-4 | 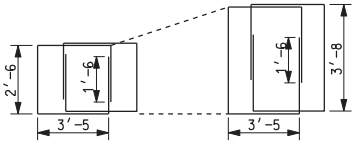  14 BAR(S) PER SET 4 SET(S) REQ'D |
| B30 | BENT CAP | 5 | 20 | 6'-2 | 123'-4 | 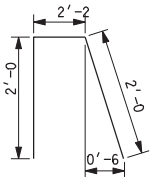  |
| C21 | COLULMN | 8 | 80 | 26'-5 | 2,113'-4 | 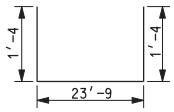  |
| C22 | COLUNM | 5 | 232 | 11'-8 | 2,706'-8 | 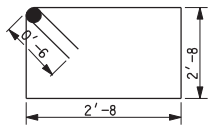  |

| MARK | LOCATION | SIZE NO. | NO. BARS | LENGTH | TOTA LENGT |
|---|---|---|---|---|---|
| C23 | COLUMN | 5 | 928 | 3'-9 | 3,480' |
| | | | | | HOOK |
| C24 | COLUMN | 5 | 24 | 3'-3 | 78'-0 |
| P1 | PARAPET | 4 | 354 | 3'-3 | 1,150' |
| P2 | PARAPET | 4 | 438 | 3'-10 | 1,679' |
| P3 | PARAPET | 4 | 18 | 149'-6 | 2,691'-0 |
| P4 | PARAPET | 4 | 36 | 14'-4 | 516'- |
| AS1 | APP SLAB | 5 | 96 | 19'-0 | 1,824' |
| AS2 | APP SLAB | 5 | 64 | 14'-7 | 933'- |
| AS3 | APP SLAB | 7 | 92 | 14'-7 | 1,341' |
| AS4 | APP ALAB | 5 | 4 | 13'-8 | 54'-8 |
| AS5 | APP SLAB | 7 | 12 | 14'-7 | 175'- |
| AS6 | APP SLAB | 5 | 4 | 17'-6 | 70'-0 |
| AS7 | APP SLAB | 5 | 124 | 4'-2 | 516'- |
| AS8 | APP SLAB | 5 | 64 | 3'-1 | 197'- |
| AS9 | APP SLAB | 5 | 64 | 6'-5 | 410'- |
| AS10 | APP SLAB | 7 | 12 | 19'-0 | 228'- |
| AS11 | APP SLAB | 7 | 4 | 14'-7 | 58'-4 |
| S1 | DECK | 5 | 66 | 150'-6 | 9,933'-0 |
| S2 | DECK | 5 | 590 | 15'-1 | 8,899' |
| S3 | DECK | 5 | 60 | 25'-0 | 1,500' |
| S4 | DECK | 5 | 236 | 6'-0 | 1,416' |
| S5 | DECK | 5 | 92 | 16'-0 | 1,472' |
| S6 | DECK | 5 | 290 | 3'-1 | 894'- |
| S7 | DECK | 5 | 314 | 4'-2 | 1,308' |
| S8 | DECK | 5 | 64 | 4'-0 | 256'- |

DGN File: IP_PWP:dms11717\44433_C-345-25_REBAR01.dgn
02-MAY-2005

| L TH | SKETCH |
|---|---|
| -0 | 0'-8, 135°, 0'-5, 2'-8, DIAMETER ϕ= 0'-2 |
| | 0'-8, 2'-7 |
| -6 | |
| -0 | 0'-6, 0'-7, 0'-2, 3'-3 |
| | 2'-6, 142'-0, 3 SPLICE(S) REQ'D |
| 0 | |
| -0 | |
| 4 | |
| -8 | |
| 3 | |
| 0 | |
| 0 | |
| 8 | 1'-0, 1'-0, 3'-2, 0'-2 |
| 4 | 0'-7, 2'-6 |
| 8 | 1'-1, 2'-6, 1'-8, 1'-2, 0'-10 |
| 0 | |
| | |
| | 2'-6, 143'-0, 3 SPLICE(S) REQ'D |
| -2 | |
| -0 | |
| -0 | |
| -0 | 15'-1, 0'-11, CUT LINE, 0'-11, 15'-1, 11.5 BAR(S) PER SET, 8 SET(S) REQ'D |
| 2 | 0'-7, 2'-6 |
| -4 | 1'-0, 1'-0, 3'-2, 0'-2 |
| 0 | |

| MARK | LOCATION | SIZE NO. | NO. BARS | LENGTH | TOTAL LENGTH | SKETCH |
|---|---|---|---|---|---|---|
| S9 | DECK | 5 | 48 | 4'-5 | 212'-0 | 0'-7, 0'-7, 0'-11, 0'-8, 8'-0, 0'-8, 1'-8 |
| S10 | DECK | 5 | 8 | 19'-0 | 152'-0 | |
| S11 | DECK | 5 | 48 | 6'-4 | 304'-0 | |
| S12 | DECK | 5 | 48 | 7'-0 | 337'-10 | 6'-5, 0'-7, 0'-9, 0'-7, 3'-9, 0'-9 |
| A1 | ABUTMENT | 6 | 68 | 15'-3 | 1,037'-0 | |
| A2 | ABUTMENT | 6 | 16 | 9'-0 | 144'-0 | |
| A3 | ABUTMENT | 6 | 16 | 10'-5 | 166'-8 | 3'-11, 6'-6 |
| A4 | ABUTMENT | 5 | 64 | 6'-2 | 394'-8 | 0'-11, 5'-3 |
| A5 | ABUTMENT | 5 | 64 | 4'-0 | 256'-0 | 2'-0, 2'-0 |
| A6 | ABUTMENT | 6 | 5 | 4'-1 | 20'-5 | |
| A7 | ABUTMENT | 5 | 14 | 4'-0 | 56'-0 | 1'-9, 2'-0, 0'-11, 2'-0 |
| A8 | ABUTMENT | 5 | 32 | 15'-3 | 488'-0 | |
| A9 | ABUTMENT | 6 | 16 | 10'-5 | 166'-8 | |
| A10 | ABUTMENT | 6 | 16 | 7'-10 | 125'-4 | |
| A11 | ABUTMENT | 6 | 16 | 9'-4 | 149'-4 | |
| A12 | ABUTMENT | 6 | 5 | 5'-7 | 27'-11 | |
| A13 | ABUTMENT | 6 | 5 | 3'-0 | 15'-0 | |
| A14 | ABUTMENT | 6 | 5 | 4'-6 | 22'-6 | |
| A15 | ABUTMENT | 6 | 16 | 11'-11 | 190'-8 | 3'-11, 8'-0 |
| A16 | ABUTMENT | 6 | 16 | 9'-3 | 148'-0 | 3'-11, 5'-4 |
| A17 | ABUTMENT | 6 | 16 | 10'-9 | 172'-0 | 3'-11, 6'-10 |
| A18 | ABUTMENT | 5 | 72 | 3'-0 | 216'-0 | |
| F1 | ABUTMENT FTG | 5 | 120 | 7'-2 | 860'-0 | |
| F2 | ABUTMENT FTG | 5 | 56 | 14'-2 | 793'-4 | |
| F11 | BENT FTG | 8 | 80 | 8'-8 | 693'-4 | |
| F12 | BENT FTG | 8 | 80 | 8'-8 | 693'-4 | |
| F13 | BENT FTG | 5 | 192 | 4'-0 | 768'-0 | 0'-8, 135°, 0'-8, 2'-8, HOOK DIAMETER ϕ= 0'-2 |

| NO. | DATE | BY | REMARKS |
|---|---|---|---|
| | | | |

REVISIONS

UTAH DEPARTMENT OF TRANSPORTATION
SALT LAKE CITY, UTAH
HDR ENGINEERING, INC.

DESIGN RDH 11/04 CHECK GCG 11/04
DRAWN JG 11/04 CHECK RDH 11/04
QUANT. RDH 11/04 CHECK GCG 11/04

APPROVAL RECOMM. DATE SENIOR DESIGN ENGR.
APPROVED FOR USE BY UDOT DATE UDOT BRIDGE ENGR.

I-15; CORRIDOR IN UTAH COUNTY
I-15 OVER 300 WEST IN AMERICAN FORK
REINFORCING STEEL SCHEDULE 1

PROJECT NUMBER SP-15-6(52)241

UTAH
COUNTY

C-345W
DRG. NO.

SHT. 25 OF 26

| MARK | LOCATION | SIZE NO. | NO. BARS | LENGTH | TOTAL LENGTH | SKETCH |
|---|---|---|---|---|---|---|
| CB1 | APP DRAIN | 5 | 12 | 9′-8 | 116′-0 | 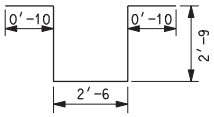  |
| CB2 | APP DRAIN | 5 | 4 | 11′-2 | 44′-8 | 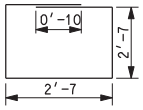  |
| CB3 | APP DRAIN | 5 | 4 | 2′-7 | 10′-4 | |

SUMMARY OF COATED BARS

| | | | | | |
|---|---|---|---|---|---|
| 6,036'-6 | OF NUMBER | 4 BARS AT | 0.668 LBS/FT = | 4,032.4 | LBS |
| 44,797'-2 | OF NUMBER | 5 BARS AT | 1.043 LBS/FT = | 46,723.4 | LBS |
| 2,385'-6 | OF NUMBER | 6 BARS AT | 1.502 LBS/FT = | 3,583.0 | LBS |
| 1,803'-0 | OF NUMBER | 7 BARS AT | 2.044 LBS/FT = | 3,685.3 | LBS |
| 3,860'-0 | OF NUMBER | 8 BARS AT | 2.670 LBS/FT = | 10,306.2 | LBS |
| 1,170'-8 | OF NUMBER | 9 BARS AT | 3.400 LBS/FT = | 3,980.3 | LBS |
| | | | TOTAL | 72,310.6 | LBS |

NOTES:

ALL BARS ARE COATED

BAR SIZES ARE U.S. UNITS.

REINFORCING STEEL DIMENSIONS ARE OUT TO OUT OF BAR UNLESS OTHERWISE SPECIFIED.

SPLICES MAY BE OMITTED AT FABRICATORS OPTION...HOWEVER, IN SUCH CASE, FABRICATOR ASSUMES RESPONSIBILITY FOR FIT.

SPLICES ARE BASED ON 40 FT BAR LENGTHS.

| NO. | DATE | BY | REMARKS |
|---|---|---|---|

REVISIONS

UTAH DEPARTMENT OF TRANSPORTATION
SALT LAKE CITY, UTAH
HDR ENGINEERING, INC.

DESIGN RDH 11/04 CHECK GCG 11/04
DRAWN JG 11/04 CHECK RDH 11/04
QUANT. RDH 11/04 CHECK GCG 11/04

APPROVAL RECOMM. DATE SENIOR DESIGN ENGR.
APPROVED FOR USE BY UDOT DATE UDOT BRIDGE ENGR.

I-15; CORRIDOR IN UTAH COUNTY
I-15 OVER 300 WEST IN AMERICAN FORK
REINFORCING STEEL SCHEDULE 2

PROJECT NUMBER SP-15-6(52)241

UTAH
COUNTY

C-345W
DRG. NO.

SHT. 26 OF 26

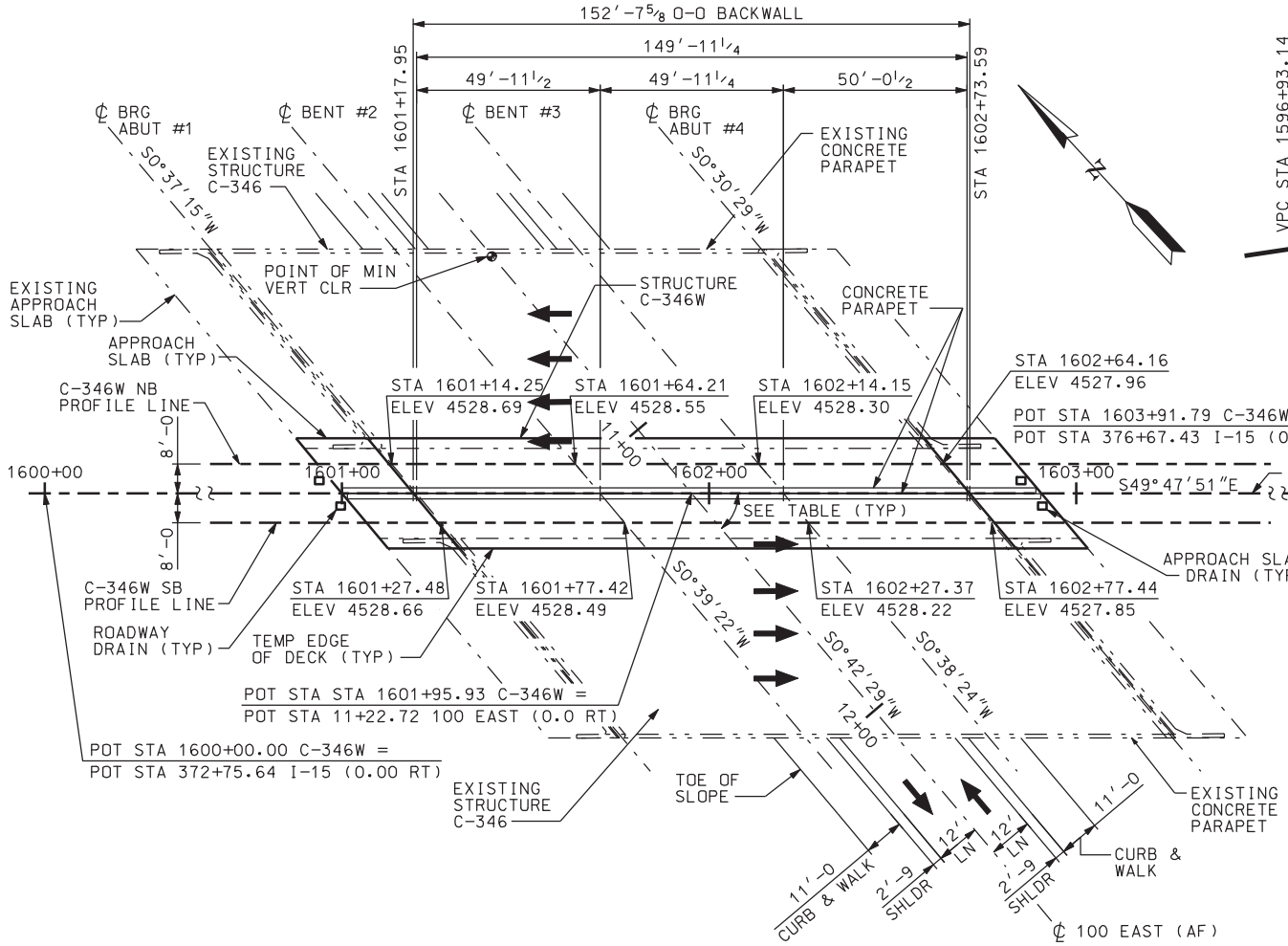


## PLAN

## CROSSING ANGLES AS DEFINED IN PLAN

| LOCATION | ANGLE |
|---|---|
| ℄ ABUT #1 | 50°25'06" |
| ℄ BENT #2 | 50°27'13" |
| ℄ 100 EAST | 50°30'20" |
| ℄ BENT #3 | 50°26'15" |
| ℄ ABUT #4 | 50°18'20" |

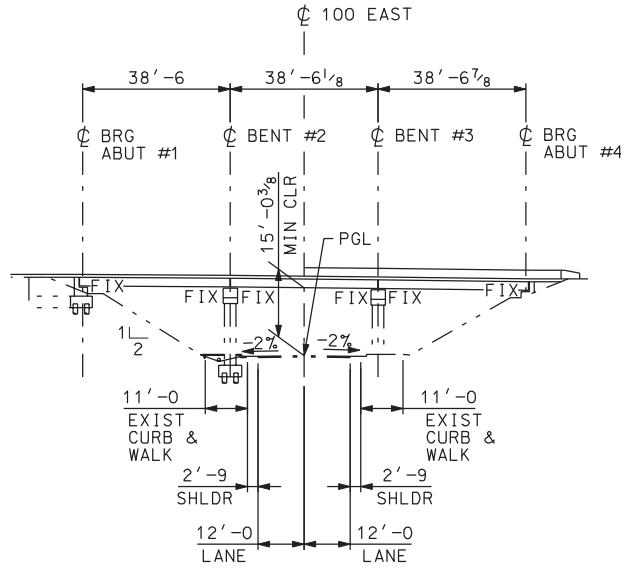


## ELEVATION

NORMAL TO 100 EAST

## PLAN NOTES

1. SEE "UTILITIES" SHEET FOR UTILITIES LOCATION.

## GENERAL NOT

1. USE COATED DEFORMED BILLET-STEEL BAR
M 284 OR M 111 AND M 31 GRADE 60 FOR
2. CONFORM ALL STRUCTURAL STEEL TO AASH
EXCEPT WHERE NOTED OTHERWISE.
3. CHAMFER ALL EXPOSED CONCRETE CORNERS
4. PROVIDE 2" CONCRETE COVER TO REINFOR
NOTED OTHERWISE.
5. USE CLASS AA (AE) FOR CAST-IN-PLACE
SPECIFIED OTHERWISE.
6. ALL NEW SUBSTRUCTURE ELEMENTS ARE DE
FIT LINE CONNECTING EXISTING ELEMENT
DIMENSIONS PRIOR TO CONSTRUCTION AND
REPORT ANY DISCREPANCY BETWEEN THESE
TO THE ENGINEER. DO NOT CONSTRUCT OR
DISCREPANCIES ARE RESOLVED. ALL STR
SURVEY CONTROL POINTS SHOWN ON THE F
STATIONING AND ALIGNMENT IS FOR INFO
DIRECTIONS AND LOCATIONS USED IN DES
7. ALL DECK, APPROACH SLAB AND PROFILE
8. VERIFY RELATIVE ELEVATION DIFFERENCE
NBL AND SBL INTERIOR MOST EXISTING B
"DECK SECTIONS" SHEET. IF THE RELAT
THAN +/- 1", ADJUST ALL PLAN ELEVATI
FOR APPROVAL BEFORE MAKING ANY ADJUS
9. SEE EXISTING STRUCTURE C-346 PLANS F
10. DO NOT SCALE DRAWINGS.
11. HORIZONTAL DIMENSIONS ARE PLAN. VER
12. POT STATION EQUATION POINTS FROM WHI
ARBITRARILY AT A DISTANCE OF APPROXI
OF APPROACH SLABS.

DGN File: IP_PWPcdns1717\4433_C-346-01_SL01.dgn
02-MAY-2005

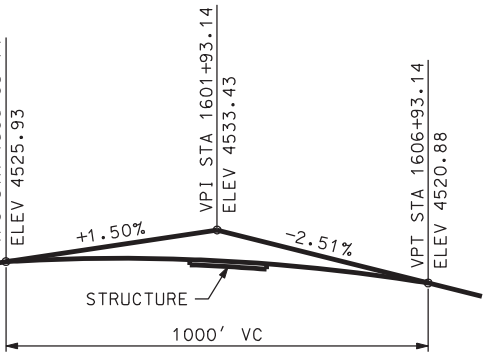


## C-346W PROFILE NB & SB

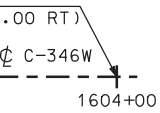


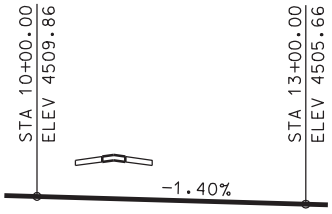


## 100 EAST PROFILE (EXIST)

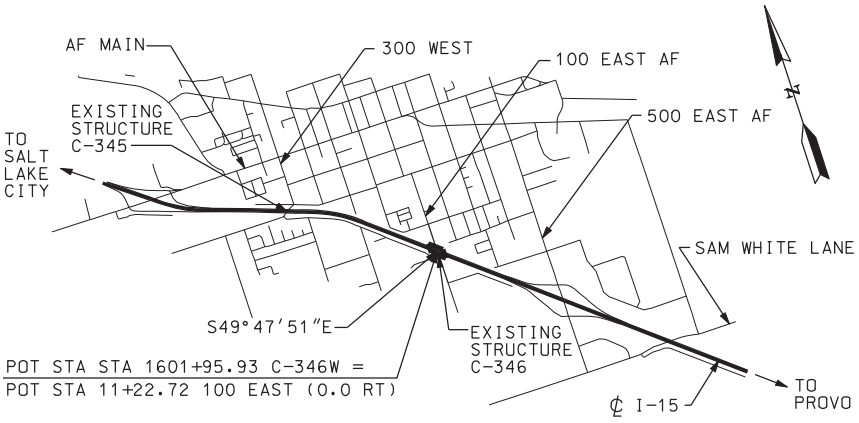


## LOCATION PLAN

## DESIGN DATA

HL-93 LOADING IN ACCORDANCE WITH AASHTO LRFD BRIDGE DESIGN SPECIFICATIONS 3rd EDITION, 2004. SEISMIC DESIGN PER NCHRP 12-49.

INVENTORY AND OPERATING RATINGS FOR HS20-44 ARE IN ACCORDANCE WITH THE AASHTO MANUAL FOR CONDITION ELEVATION OF BRIDGES, 2nd EDITION, AND THE 2001 AND 2003 INTERIM SPECIFICATIONS LOAD FACTOR METHOD. INVENTORY AND OPERATING RATINGS FOR HL-93 ARE IN ACCORDANCE WITH THE GUIDE MANUAL FOR CONDITION EVALUATION AND LOAD RESISTANCE FACTOR RATING (LRFR) OF HIGHWAY BRIDGES.

| | | OPERATING RATING | INVENTORY RATING |
|---|---|---|---|
| EXISTING GIRDERS: | (HS-20) | 2.76 | 1.65 |
| | (HL-93) | 2.34 | 1.81 |
| NEW GIRDERS: | (HL-93) | 2.26 | 1.74 |

CAST-IN-PLACE CONCRETE: f'c = 4000 PSI; fy (REINF) = 60 KSI

STRUCTURAL STEEL: Fy = 36 KSI MIN.

WEARING SURFACE: 3" ASPHALT (NOW) 35 PSF, 0 PSF FWS

DESIGN SPEED: I-15 = 70 M.P.H.; 100 EAST = 40 M.P.H.

SEISMIC: SEISMIC DESIGN PARAMETERS
(500 YR RETURN PERIOD, 10% PE IN 50 YR)
Ss = MAX CONSIDERED EQ GROUND MOTION
AT 0.2s = 0.46g
S1 = MAX CONSIDERED EQ GROUND MOTION
AT 1.0s = 0.16g
SITE CLASS D
EXISTING STRUCTURE ELEMENTS DO NOT
MEET THE SEISMIC DESIGN CRITERIA.

## TES

RS CONFORMING TO AASHTO
ALL REINFORCING STEEL.

ITO M 270 GRADE 36 MIN.,

S 3/4" EXCEPT WHERE NOTED OTHERWISE.

RCING STEEL EXCEPT WHERE

CONCRETE EXCEPT WHERE

ESIGNED TO ALIGN WITH A BEST
TS. FIELD VERIFY ALL CONTROLLING
FABRICATION OF ANY MATERIALS.
PLANS AND THE EXISTING STRUCTURE
FABRICATE ANY ELEMENTS UNTIL THE
RUCTURE GEOMETRY IS BASED ON LOCAL
OUNDATION PLAN. THE I-15
RMATION ONLY. ABUTMENT/PIER
IGN ARE LISTED.

GRADE ELEVATIONS ARE AT TOP OF CONCRETE.

ES BETWEEN C-346 AND C-346W AT BOTTOM OF
BEAMS AT FACE OF BENT #2, SEE
IVE ELEVATION DIFFERENCES VARY BY MORE
ONS ACCORDINGLY AND SUBMIT TO THE ENGINEER
TMENTS IN THE FIELD.

OR ADDITIONAL INFORMATION.

RTICAL DIMENSIONS ARE PLUMB.

CH ℄ C-346W IS DEFINED ARE SET
MATELY 100 FEET BEYOND THE END

## INDEX OF SHEETS


1. SITUATION & LAYOUT 1
2. SITUATION & LAYOUT 2
3. UTILITIES
4. SOIL DATA SHEET 1
5. SOIL DATA SHEET 2
6. FOUNDATION PLAN
7. DRIVEN PILE DETAILS
8. ABUTMENT PLAN & ELEVATION
9. ABUTMENT DETAILS
10. BENT PLAN & ELEVATION
11. BENT DETAILS
12. BENT FOOTING DETAILS
13. FRAMING PLAN
14. GIRDER DETAILS
15. DIAPHRAGM DETAILS 1
16. DIAPHRAGM DETAILS 2
17. BEARING DETAILS
18. DECK SLAB PLAN
19. DECK SECTIONS
20. SCREED ELEVATIONS
21. PARAPET DETAILS
22. PARAPET END DETAILS
23. APPROACH SLAB PLAN
24. APPROACH SLAB DETAILS
25. APPROACH SLAB DRAIN DETAILS
26. CONCRETE SLOPE PROTECTION
27. REINFORCING STEEL SCHEDULE 1
28. REINFORCING STEEL SCHEDULE 2


## QUANTITIES

| ITEM | EST | UNIT | AS CONSTR |
|---|---|---|---|
| GRANULAR BACKFILL BORROW (PLAN QUANTITY) | 84 | CU YD | |
| PILE DRIVING EQUIPMENT | 1 | LUMP | |
| DRIVEN PILES 12 3/4 INCH | 3108 | FEET | |
| REINFORCING STEEL - COATED | 91,420 | LB | |
| STRUCTURAL CONCRETE (EST.QTY 438.1 C.Y.) | 1 | LUMP | |
| PREPARE BRIDGE FOR WIDENING | 1 | LUMP | |
| STRUCTURAL STEEL (EST QTY 88,546 LBS) | 1 | LUMP | |
| REPLACE CONCRETE SLOPE PROTECTION | 430 | SQ YD | |
| DYNAMIC PILE TESTING | 12 | EACH | |
| | | | |
| | | | |

| NO. | DATE | BY | REMARKS |
|---|---|---|---|
| | | | |

REVISIONS

UTAH DEPARTMENT OF TRANSPORTATION
SALT LAKE CITY, UTAH
STRUCTURES DIVISION

DESIGN KTF 08/04 CHECK PBB 09/04
DRAWN BLP 08/04 CHECK PBB 09/04
QUANT. PBB 11/04 CHECK JW 11/04

APPROVAL RECOMM. DATE SENIOR DESIGN ENGR.
APPROVED FOR USE BY UDOT DATE UDOT BRIDGE ENGR.

I-15; CORRIDOR IN UTAH COUNTY
100 EAST OVERPASS IN AMERICAN FORK
SITUATION & LAYOUT 1

PROJECT NUMBER SP-15-6(52)241

UTAH
COUNTY

C-346W
DRG. NO.

SHT. 1 OF 28

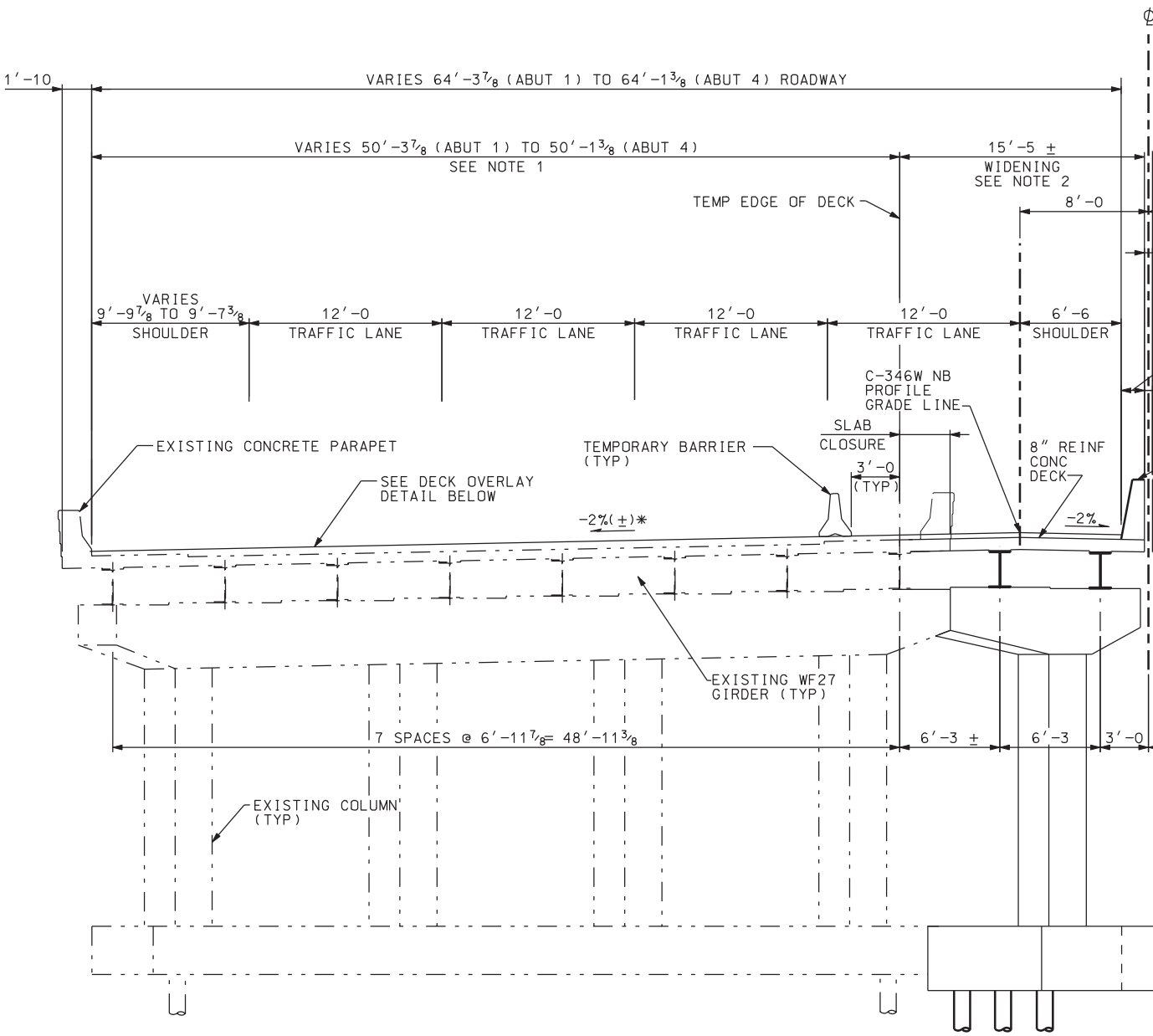


SECTION THRU

* MATCH EXISTIN

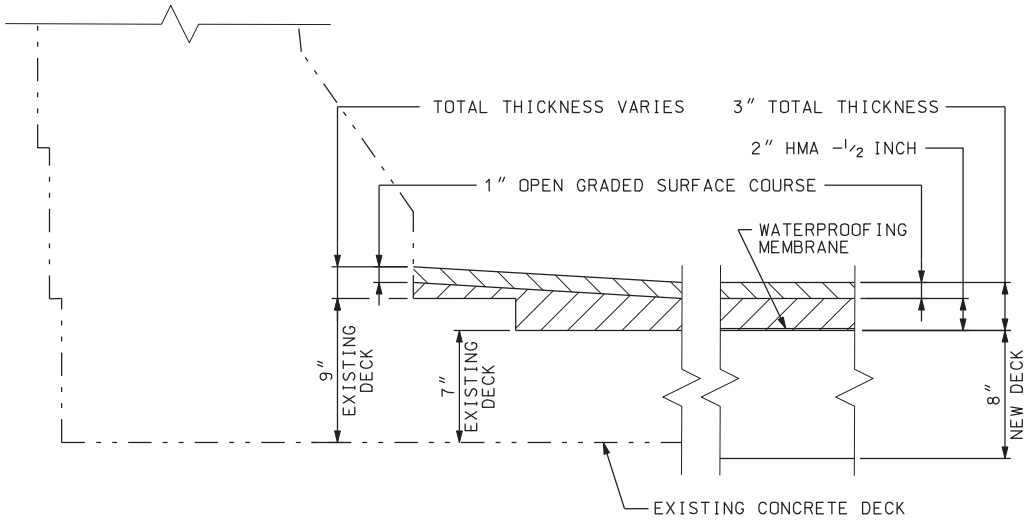


DECK OVERLAY DETAIL

DGN File: IP_PWPcdns1717\4433_C-346-02_SL02.dgn

02-MAY-2005

C-346W CONTROL LINE AND HORIZONTAL CONTROL LINE

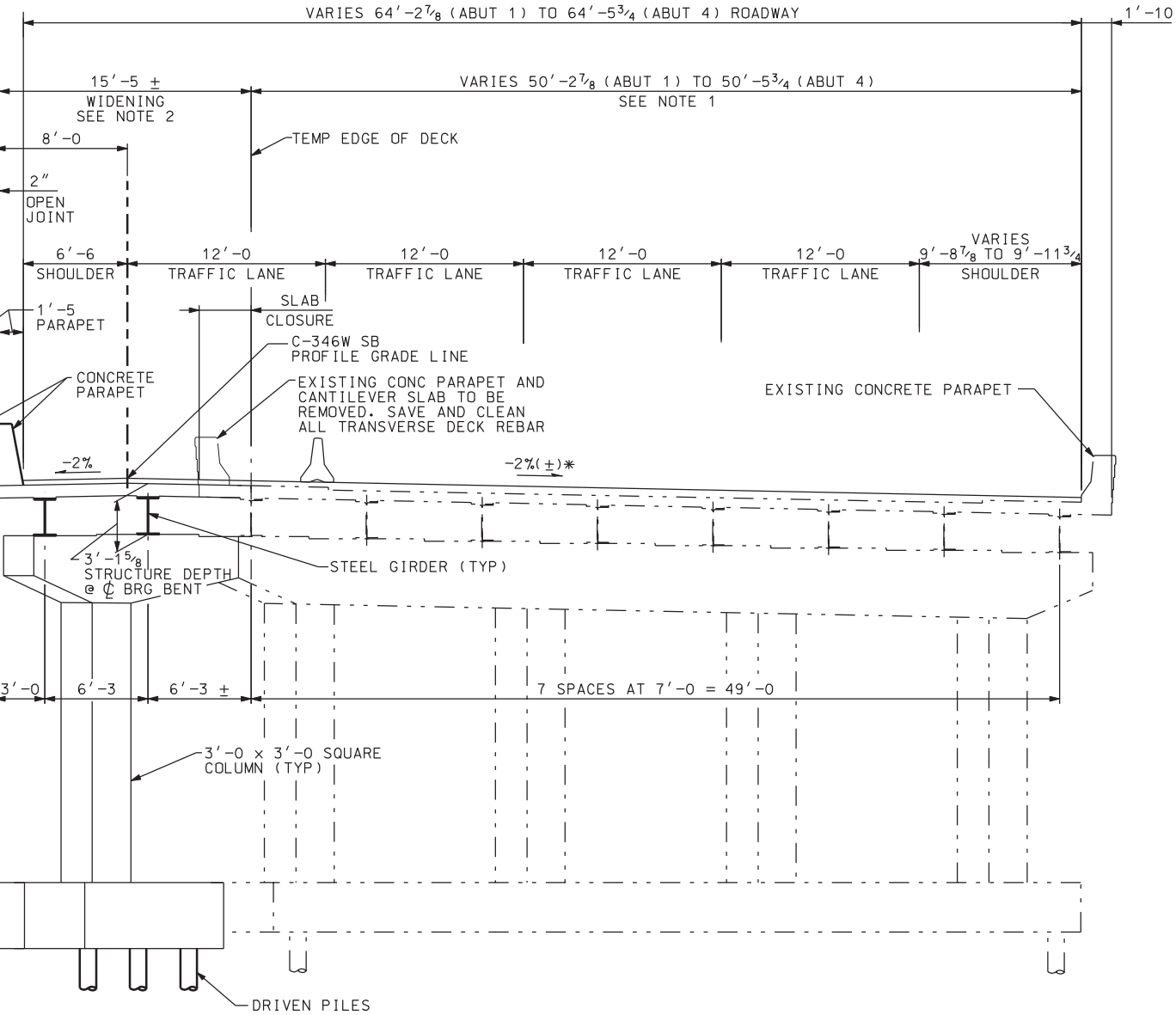


## STRUCTURE

G CROSS SLOPE

## NOTES

1. PARTIALLY REMOVE EXISTING ASPHALT SURFACING OVERLAY. SEE M-91 SHEETS FOR TRANSITION AND REHABILITATION DETAILS.
2. APPLY WATERPROOFING MEMBRANE, PLACE 1" OPEN GRADED SURFACE COURSE AND 2" HMA -1/2 INCH - TOTAL THICKNESS= 3". SEE DECK OVERLAY DETAIL. SEE DRG. NO. M-91.
3. PROFILE GRADE LINE IS TAKEN AT TOP OF NEW CONCRETE DECK.

| NO. | DATE | BY | REMARKS |
|---|---|---|---|

REVISIONS

UTAH DEPARTMENT OF TRANSPORTATION
SALT LAKE CITY, UTAH
STRUCTURES DIVISION

DESIGN KMR 08/04 CHECK PBB 09/04
DRAWN BLP 08/04 CHECK PBB 09/04
QUANT. CHECK

APPROVAL RECOMM. DATE SENIOR DESIGN ENGR.
APPROVED FOR USE BY UDOT DATE UDOT BRIDGE ENGR.

I-15; CORRIDOR IN UTAH COUNTY
100 EAST OVERPASS IN AMERICAN FORK
SITUATION & LAYOUT 2

PROJECT NUMBER SP-15-6(52)241

UTAH
COUNTY

C-346W
DRG. NO.

SHT. 2 OF 28

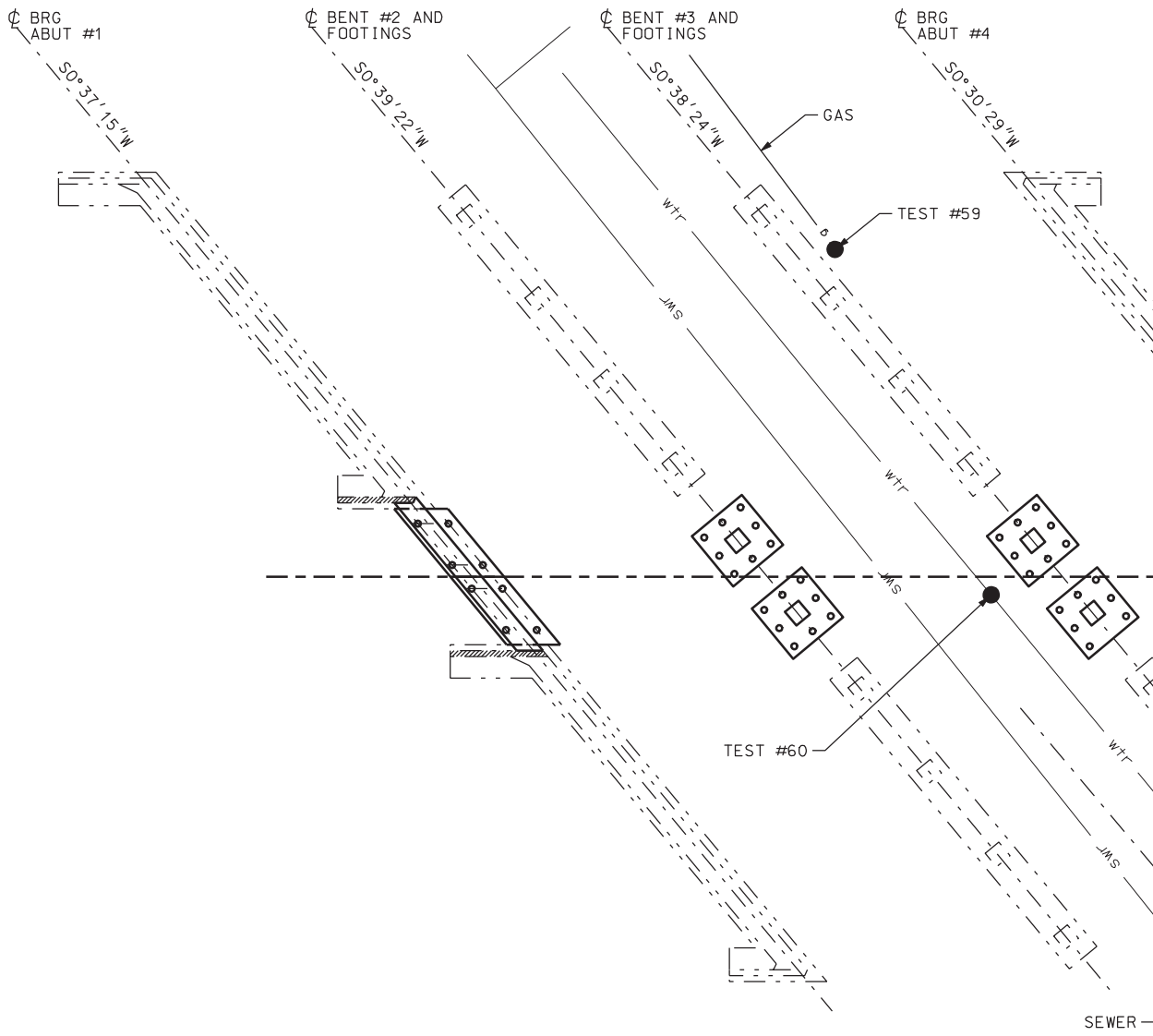


## PL

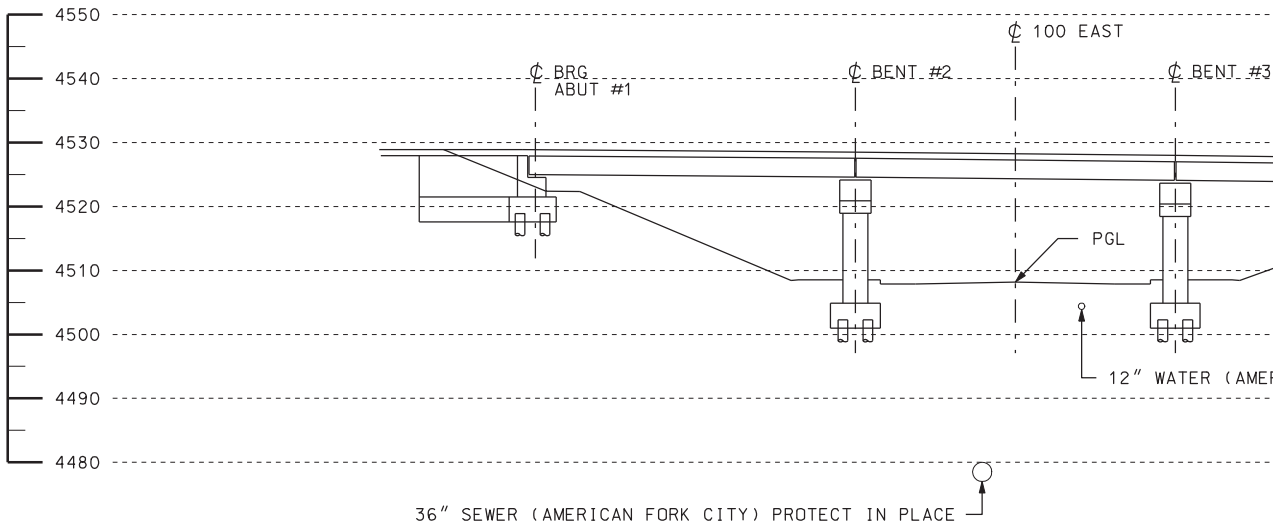


## ELEVATION

TAKEN AT ℄ C-346W

DGN File:IP_PWPcdms1717\4433_C-346-03_UTIL01.dgn

02-MAY-2005

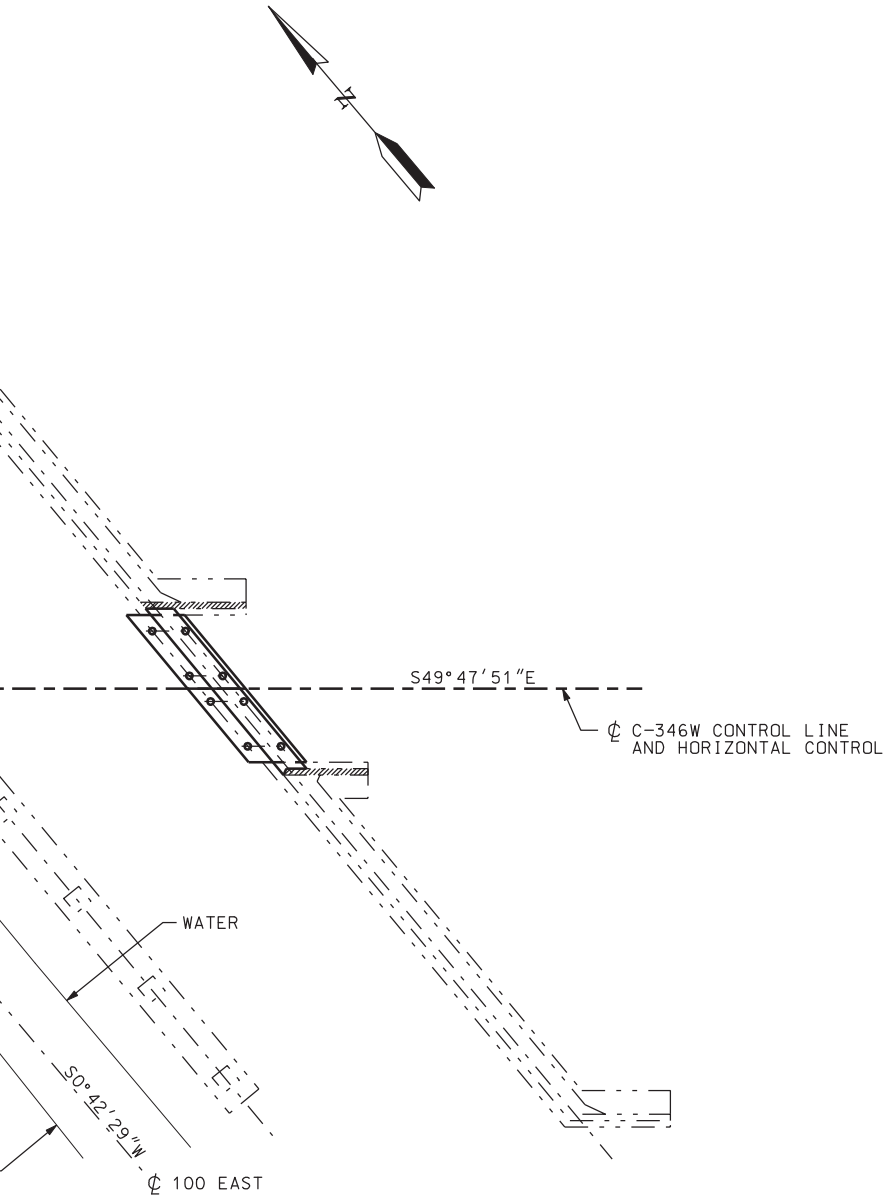


LAN

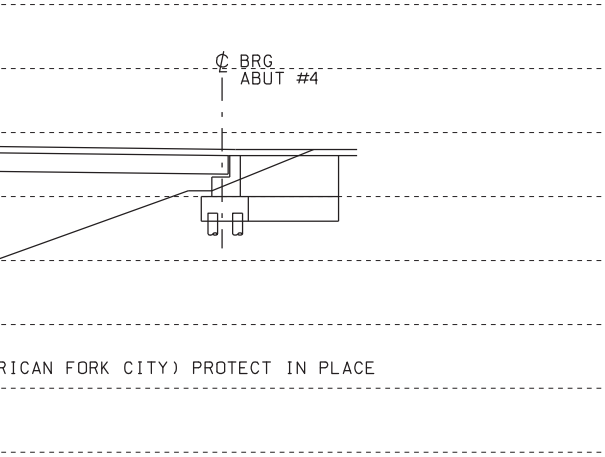


## NOTES

1. SEE ROADWAY DRAWINGS FOR UTILITY CONTACT LIST.
2. UTILITIES SHOWN AT ELEVATION 4480 ARE AT AN UNDETERMINED ELEVATION. VERIFY ACTUAL ELEVATIONS OF THESE UTILTIES ONLY AS NECESSARY.
3. PROTECT IN PLACE ALL UTILITIES LABELED AS SUCH. REPAIR OR REPLACE DISTURBED OR DAMAGED UTILITIES AT THE DISCRETION OF THE UTILITY OWNER AT NO COST TO THE DEPARTMENT.
4. SEE UT 8 FOR UTILITIES DATA NOT SHOWN.

## LEGEND

swr — EXISTING SEWER
wtr — EXISTING WATER
g — EXISTING GAS

| NO. | DATE | BY | REMARKS |
|---|---|---|---|

REVISIONS

UTAH DEPARTMENT OF TRANSPORTATION
SALT LAKE CITY, UTAH
STRUCTURES DIVISION

DESIGN JW 03/04 CHECK PBB 03/04
DRAWN RDF 03/04 CHECK PBB 03/04
QUANT. CHECK

APPROVAL RECOMM. DATE SENIOR DESIGN ENGR.
APPROVED FOR USE BY UDOT DATE UDOT BRIDGE ENGR.

I-15; CORRIDOR IN UTAH COUNTY
100 EAST OVERPASS IN AMERICAN FORK
UTILITIES
PROJECT NUMBER SP-15-6(52)241

UTAH
COUNTY

C-346W
DRG. NO.

SHT. 3 OF 28

# DRILL HOLE LOG

## BORING NO. 04-1

Sheet: 1 of 1

PROJECT: I-15, CORRIDOR IN UTAH COUNTY - STRUCTURE C346 PROJECT NO.: 200401.045
CLIENT: UTAH DEPARTMENT OF TRANSPORTATION DATE: 7/21/04
LOCATION: SEE SITE PLAN: N 106399, E 192809 ELEVATION: 4507.8'
DRILLER: D. SAMPSON, W. SORENSEN LOGGED BY: R.J., V.N.B.
EQUIP./DRILL METHOD: CME-55 / N.W. CASING
DEPTH TO WATER - INITIAL: ▽ 6.8' AFTER 24 HOURS: ▽ 6.8'

| Elev. (Feet) | Depth (Feet) | Lith-ology | SAMPLE Type | Rec. (In.) | Blows Per 6" & Torvane (tsf) | USCS (AASHTO) | Material Description | | Dry Density, pcf | Moisture Content, % | Atter. Liquid Limit, % | Atter. Plasticity Index, % | Gradation Gravel, % | Gradation Sand, % | Gradation Silt/Clay, % | Other Tests |
|---|---|---|---|---|---|---|---|---|---|---|---|---|---|---|---|---|
| | | | | 14 | 3,33,26 | ML<br>ML/GM | brown, moist, loose<br>brown, slightly moist, dense | GRAVELLY SILT W/SAND<br>GRAVELLY SILT TO SILTY GRAVEL | | | | | | | | |
| 4505 | | | | | | | | | | | | | | | | |
| | 5 | | | 11 | 8,8,7 | GP-GM | gray, wet, med. dense | GRAVEL W/SILT & SAND | | | | | | | | |
| 4500 | | | | | | | | | | | | | | | | |
| | 10 | | | 3 | 6,3,2 | GP-GM | gray, wet, loose | GRAVEL W/SILT & SOME SAND | | | | | | | | |
| 4495 | | | | | | | | | | | | | | | | |
| | 15 | | | 10 | Pushed 0.35 | CL (A-4(6)) | brown, wet, firm | LEAN CLAY W/SOME SAND & GRAVEL | 113.2 | 21.6 | 30 | 9 | 0 | 36 | 64 | UC |
| 4490 | | | | 5 | 9,9,3 | GC/CL | brown, wet, med. dense | CLAYEY GRAVEL TO GRAVELLY CLAY | | | | | | | | |
| | 20 | | | 18 | Pushed 0.61 | CL (A-7-5(15)) | brown, moist, stiff | SANDY LEAN CLAY<br>SILTY SAND<br>SANDY LEAN CLAY | 97.7 | 27.6 | 49 | 22 | 0 | 5 | 95 | CT<br>UC |
| 4485 | | | | 17 | 3,4,6 | ML | brown, moist, med. dense, low plasticity | SANDY SILT<br>more sand w/depth | | | | | | | | |
| | 25 | | | 10 | 7,5,11 | SM | brown, wet, med. dense | VERY SILTY SAND W/GRAVEL<br>fine to med. sand | | | | | | | | |
| 4480 | | | | | | | | | | | | | | | | |
| | 30 | | | 12 | 22,22,29 | GP-GM (A-1-a) | gray-brown, wet, dense | POORLY GRADED GRAVEL W/SILT & SAND | | 8.7 | | NP | 58 | 32 | 10 | |
| 4475 | | | | | | | | | | | | | | | | |
| | 35 | | | 13 | 13,16,13 | SM/GM | brown, wet, dense, some flowing sand | SILTY SAND W/GRAVEL | | | | | | | | |
| 4470 | | | | | | | | | | | | | | | | |
| | 40 | | | 15 | Pushed 0.51 | CL (A-6(13)) | gray, moist, firm to stiff, w/some fine sand | | 108.0 | 25.3 | 37 | 13 | 0 | 9 | 91 | UC |
| 4465 | | | | | | | | | | | | | | | | |
| | 45 | | | 17 | 2,3,3 0.86 | CL | gray, moist, stiff | | | | | | | | | |
| 4460 | | | | | | | | LEAN CLAY W/SOME SILTY SAND LENSES | | | | | | | | |
| | 50 | | | 17 | Pushed 0.54 | CL (A-7-5(15)) | gray, moist, stiff | | 86.8 | 33.5 | 48 | 23 | 0 | 0 | 100 | CT<br>UC |
| 4455 | | | | 18 | 0,3,3 0.44 | CL | gray, moist, firm, some black streaks | | | | | | | | | |
| | 55 | | | 18 | 0,3,4 0.56 | CL | gray, moist, stiff, w/some black silty sand lenses, slight organic odor | | | | | | | | | |
| 4450 | | | | | | | | | | | | | | | | |
| | 60 | | | 14 | 3,15,20 | SP-SM (A-2-4) | gray, wet, med. dense | | | 16.5 | | NP | 17 | 72 | 11 | |
| 4445 | | | | | | | some flowig sand | POORLY GRADED SAND W/SILT & GRAVEL | | | | | | | | |
| | 65 | | | 12 | 15,22,22 | SP-SM | gray, wet, dense | | | | | | | | | |
| 4440 | | | | | | | | | | | | | | | | |
| | 70 | | | 15 | 19,32,37 | SM (A-1-b) | gray, wet, dense | SILTY SAND<br>some fine gravel | | 13.5 | | NP | 9 | 78 | 13 | DS |

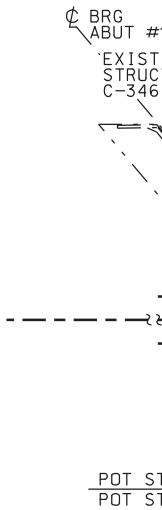


DGN File: IP_PWPdms1717\4433_C-346-04 soil data 1.dgn

02-MAY-2005

# KEY TO BORING LOG

## SYMBOLS

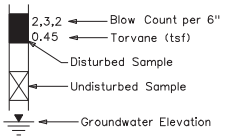


UC = Unconfined Compression Test
CT = Consolidation Test
SG = Specific Gravity Test
DS = Direct Shear Test

## RELATIVE DENSITY (NON-PLASTIC - SAND & SILT)

VERY LOOSE N<4
LOOSE N 4-10
MED DENSE N 10-30
DENSE N 30-50
VERY DENSE N>50

## CONSISTENCY (PLASTIC - SILT & CLAY)

VERY SOFT N<2
SOFT N 2-4
MEDIUM STIFF N 4-8
STIFF N 8-15
VERY STIFF N 15-30
HARD N>30

## GENERAL NOTES

1. THE SUBSURFACE EXPLORATIONS SHOWN WERE CONDUCTED BETWEEN 07-21-04 AND 07-22-04 BY RB&G ENGINEERING, INC..
2. THESE BORING LOGS REPRESENT A SYNOPSIS OF THE SOIL DEPOSITS ENCOUNTERED WITHIN EACH BORING AND ARE BASED ON SOUND GEOLOGICAL AND ENGINEERING JUDGMENT. BECAUSE SOIL IS A COMPLEX MEDIUM, THESE BORING LOGS MAY OR MAY NOT REPRESENT THE SOIL CONDITIONS AT THIS SITE. THIS SUBSURFACE INTERPRETATION IS PRESENTED IN GOOD FAITH AND IS NOT INTENDED AS A SUBSTITUTE FOR PERSONAL INVESTIGATION AND JUDGEMENT OF THE CONTRACTOR.
3. THE WATER LEVELS AND CONDITIONS INDICATED ON THE BORING LOGS REPRESENT HOLE CONDITIONS ON THE DATE SHOWN, HOWEVER, IT SHOULD BE NOTED, THAT AT LOCATIONS AWAY FROM THE BORINGS OR AT ANOTHER TIME THE WATER LEVELS AND CONDITIONS MAY VARY SIGNIFICANTLY.
4. THE STRATIFICATION LINES REPRESENT THE APPROXIMATE BOUNDARIES BETWEEN SOIL TYPES AND THE TRANSITION MAY BE GRADUAL.
5. COBBLE - A ROCK WITH AN AVERAGE DIMENSION BETWEEN 3 INCHES AND 12 INCHES
6. BOULDER - A ROCK WITH AN AVERAGE DIMENSION OF 12 INCHES OR GREATER

NOTE: DRILL RIG USED - CME 55
HAMMER E=0.75

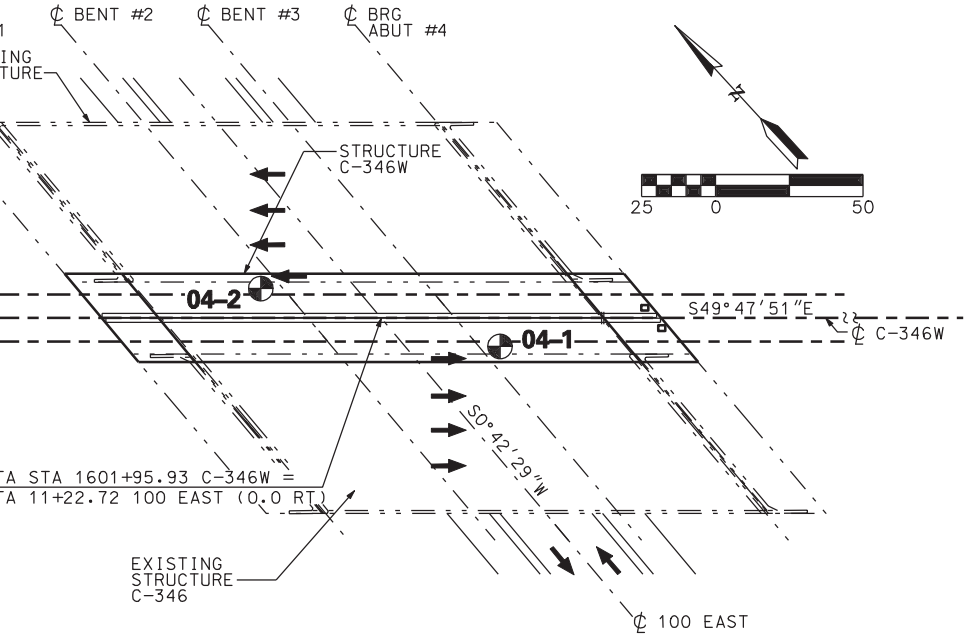


## LOCATION PLAN

GEOTECHNICAL ENGINEER

| NO. | DATE | BY | REMARKS |
|---|---|---|---|
| | | | |

REVISIONS

UTAH DEPARTMENT OF TRANSPORTATION
SALT LAKE CITY, UTAH
STRUCTURES DIVISION

RB&G ENGINEERING INC.

DESIGN BEP 10/04 CHECK
DRAWN JPN 10/04 CHECK
QUANT. CHECK

APPROVAL RECOMM. DATE SENIOR DESIGN ENGR.
APPROVED FOR USE BY UDOT DATE UDOT BRIDGE ENGR.

I-15; CORRIDOR IN UTAH COUNTY
100 EAST OVERPASS IN AMERICAN FORK
SOIL DATA SHEET 1

PROJECT NUMBER SP-15-6(52)241

UTAH
COUNTY

C-346W
DRG. NO.

SHT. 4 OF 28

# DRILL HOLE LOG

## BORING NO. 04-2

Sheet: 1 of 1

PROJECT: I-15, CORRIDOR IN UTAH COUNTY - STRUCTURE C346 PROJECT NO.: 200401.045
CLIENT: UTAH DEPARTMENT OF TRANSPORTATION DATE: 7/22/04
LOCATION: SEE SITE PLAN: N 106455, E 192770 ELEVATION: 4508.6'
DRILLER: D. SAMPSON, W. SORENSEN LOGGED BY: R.J., V.N.B.
EQUIP./DRILL METHOD: CME-55 / N.W. CASING TO 63' THEN DRILLING MUD
DEPTH TO WATER - INITIAL: ▽ N.M. AFTER 24 HOURS: ▼ 6.7'

| Elev. (Feet) | Depth (Feet) | Lithology | Sample Type | Sample Rec. (In.) | Sample Blows Per 6" & Torvane (tsf) | USCS (AASHTO) | Material Description | | Dry Density, pcf | Moisture Content, % | Atter. Liquid Limit, % | Atter. Plasticity Index, % | Gradation Gravel, % | Gradation Sand, % | Gradation Silt/Clay, % | Other Tests |
|---|---|---|---|---|---|---|---|---|---|---|---|---|---|---|---|---|
| | | | | 16 | 0.40<br>6,25,23 | CL<br>GM | brown | 4" CLAY W/GRAVEL | | | | | | | | |
| 4505 | | | | | | | gray & brown, slightly moist, med. dense, organic odor | SILTY GRAVEL W/SAND | | | | | | | | |
| | 5 | | | 0 | 6,5,5 | - | very loose | | | | | | | | | |
| 4500 | | | | 11 | 9,12,13 | GP-GM<br>(A-1-a) | gray & brown, wet, loose | POORLY GRADED GRAVEL W/SILT & SAND | | 8.2 | | NP | 62 | 28 | 10 | |
| | 10 | | | 15 | 1,2,1<br>0.37 | SM/ML<br>CL/CL-ML | brown, wet, very loose | SILTY SAND TO SANDY SILT | | | | | | | | |
| 4495 | | | | | | | brown, wet, firm, some yellow & black streaks | LEAN TO SILTY CLAY | | | | | | | | |
| | 15 | | | 0 | Pushed | - | | SILTY SAND | | | | | | | | |
| | | | | 17 | Pushed<br>0.39 | SM<br>(A-4(2)) | brown, wet | | | 22.1 | | NP | 0 | 56 | 44 | |
| 4490 | | | | 17 | 1,1,2 | SM/ML<br>(A-4(2)) | brown, wet, very loose | SILTY FINE TO MED. SAND TO SANDY SILT W/SILTY CLAY LAYERS | | 27.6 | | NP | 0 | 54 | 46 | |
| | 20 | | | | | | | | | | | | | | | |
| 4485 | | | | 2 | 15,13,7 | GC | brown, wet, loose | CLAYEY GRAVEL W/SAND | | | | | | | | |
| | 25 | | | | | | | | | | | | | | | |
| 4480 | | | | 12 | 19,18,27 | GM/GC | brown, wet, med. dense | SILTY/CLAYEY GRAVEL W/SAND | | | | | | | | |
| | 30 | | | | | | | | | | | | | | | |
| 4475 | | | | 2 | 24,25,38 | GM/GC | brown, very wet, dense | | | | | | | | | |
| | 35 | | | | | | | | | | | | | | | |
| 4470 | | | | 10 | 14,13,8 | SM<br>(A-2-4) | brown, wet, med. dense | SILTY FINE TO COURSE SAND W/GRAVEL | | 17.5 | | NP | 14 | 56 | 30 | |
| | 40 | | | | | | | | | | | | | | | |
| 4465 | | | | 16 | Pushed<br>0.46 | CL<br>(A-6(11) | gray, moist, firm | LEAN TO SILTY CLAY W/FINE SAND LENSES | 104.6 | 27.5 | 39 | 18 | 0 | 1 | 99 | UC |
| | 45 | | | | | | | | | | | | | | | |
| 4460 | | | | 18 | Pushed<br>0.53 | CH<br>(A-7-5(18) | gray, moist, stiff | FAT CLAY W/SILT LENSES | 89.0 | 35.2 | 52 | 29 | 0 | 0 | 100 | UC |
| | 50 | | | | | | | | | | | | | | | |
| 4455 | | | | 18 | 1,4,6<br>0.72 | CL | gray to dk. gray, moist, stiff, slight organic odor | LEAN CLAY | | | | | | | | |
| | 55 | | | | | | | | | | | | | | | |
| 4450 | | | | 18 | Pushed<br>0.52 | CL<br>(A-7-5(15)) | gray-brown, moist, stiff | | 87.6 | 36.5 | 49 | 25 | 0 | 0 | 100 | UC |
| | 60 | | | | | | | | | | | | | | | |
| 4445 | | | | 10 | 25,29,28 | CL<br>SM | gray, wet, very dense, some gravel less than 1.25" diameter | SILTY FINE TO MED. SAND | | | | | | | | |
| | 65 | | | | | | | | | | | | | | | |
| 4440 | | | | - | 28,39,33 | SM<br>(A-1-b) | gray, wet, very dense | SILTY FINE TO COARSE SAND W/SOME GRAVEL | | 11.2 | | NP | 32 | 54 | 14 | |
| | 70 | | | | | | | | | | | | | | | |
| 4435 | | | | - | 23,34,35 | SM | gray, wet, very dense | SILTY FINE SAND | | | | | | | | |

DGN File: IP_PWPdms1717\4433_C-346-05 soil data 2.dgn

02-MAY-2005

# KEY TO BORING LOG

## SYMBOLS

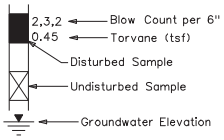


UC = Unconfined Compression Test
CT = Consolidation Test
SG = Specific Gravity Test
DS = Direct Shear Test

## RELATIVE DENSITY (NON-PLASTIC - SAND & SILT)

VERY LOOSE N<4
LOOSE N 4-10
MED DENSE N 10-30
DENSE N 30-50
VERY DENSE N>50

## CONSISTENCY (PLASTIC - SILT & CLAY)

VERY SOFT N<2
SOFT N 2-4
MEDIUM STIFF N 4-8
STIFF N 8-15
VERY STIFF N 15-30
HARD N>30

## GENERAL NOTES

1. THE SUBSURFACE EXPLORATIONS SHOWN WERE CONDUCTED BETWEEN 07-21-04 AND 07-22-04 BY RB&G ENGINEERING, INC..
2. THESE BORING LOGS REPRESENT A SYNOPSIS OF THE SOIL DEPOSITS ENCOUNTERED WITHIN EACH BORING AND ARE BASED ON SOUND GEOLOGICAL AND ENGINEERING JUDGMENT. BECAUSE SOIL IS A COMPLEX MEDIUM, THESE BORING LOGS MAY OR MAY NOT REPRESENT THE SOIL CONDITIONS AT THIS SITE. THIS SUBSURFACE INTERPRETATION IS PRESENTED IN GOOD FAITH AND IS NOT INTENDED AS A SUBSTITUTE FOR PERSONAL INVESTIGATION AND JUDGEMENT OF THE CONTRACTOR.
3. THE WATER LEVELS AND CONDITIONS INDICATED ON THE BORING LOGS REPRESENT HOLE CONDITIONS ON THE DATE SHOWN, HOWEVER, IT SHOULD BE NOTED, THAT AT LOCATIONS AWAY FROM THE BORINGS OR AT ANOTHER TIME THE WATER LEVELS AND CONDITIONS MAY VARY SIGNIFICANTLY.
4. THE STRATIFICATION LINES REPRESENT THE APPROXIMATE BOUNDARIES BETWEEN SOIL TYPES AND THE TRANSITION MAY BE GRADUAL.
5. COBBLE - A ROCK WITH AN AVERAGE DIMENSION BETWEEN 3 INCHES AND 12 INCHES
6. BOULDER - A ROCK WITH AN AVERAGE DIMENSION OF 12 INCHES OR GREATER

NOTE: DRILL RIG USED - CME 55
HAMMER E=0.75

GEOTECHNICAL ENGINEER

| NO. | DATE | BY | REMARKS |
|---|---|---|---|

REVISIONS

UTAH DEPARTMENT OF TRANSPORTATION
SALT LAKE CITY, UTAH
STRUCTURES DIVISION

RB&G ENGINEERING INC.

DESIGN BEP 10/04 CHECK
DRAWN JPN 10/04 CHECK
QUANT. CHECK

APPROVAL RECOMM. DATE SENIOR DESIGN ENGR.
APPROVED FOR USE BY UDOT DATE UDOT BRIDGE ENGR.

I-15; CORRIDOR IN UTAH COUNTY
100 EAST OVERPASS IN AMERICAN FORK
SOIL DATA SHEET 2
PROJECT NUMBER SP-15-6(52)241

UTAH
COUNTY

C-346W
DRG. NO.

SHT. 5 OF 28

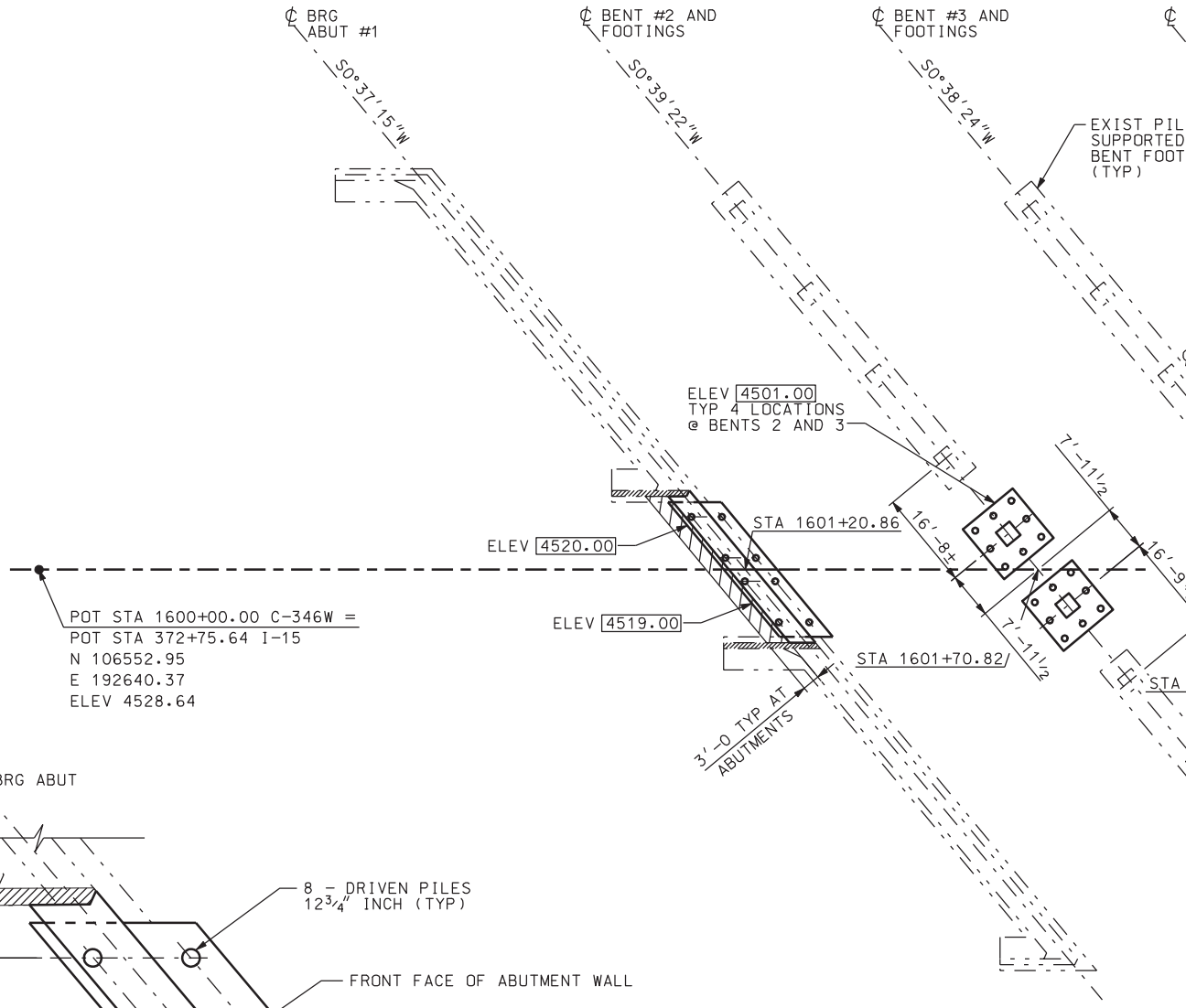


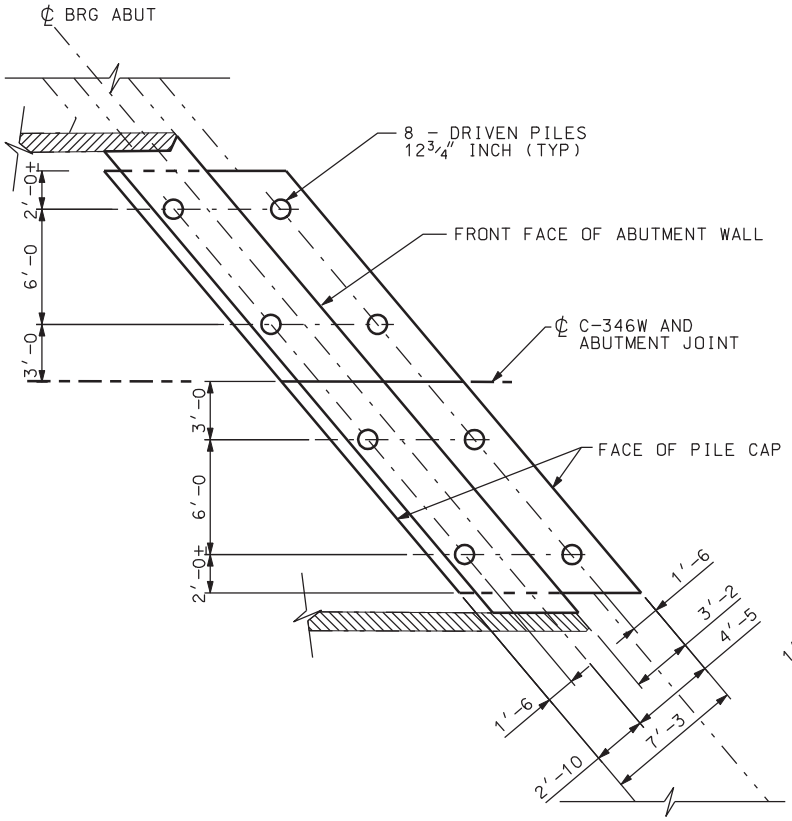


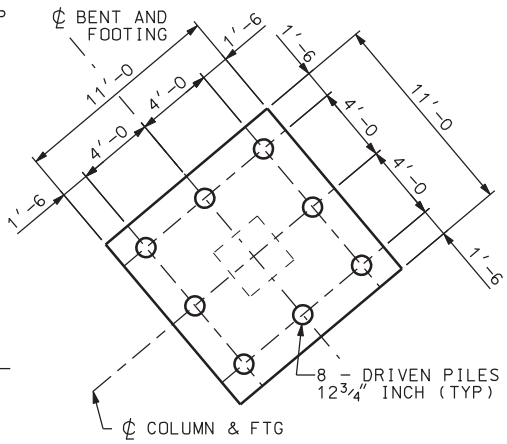


## PILE LAYOUT FOR ABUTMENTS #1 & #4

**DETAIL**

2 LOCATIONS

## PILE LAYOUT FOR BENTS #2 & #3

**DETAIL**

4 LOCATIONS

DGN File: IP_PWPcdns1717\4433_C-346-06_FOUN01.dgn
02-MAY-2005

| CONTROL POINT DATA | | | |
|---|---|---|---|
| POINTS | NORTHING | EASTING | ELEV |
| CP-C346-1 | 106620.30 | 192818.25 | 4510.00 |
| CP-C346-2 | 106269.60 | 192862.02 | 4525.74 |
| CP-C346-3 | 106137.22 | 192755.04 | 4503.44 |

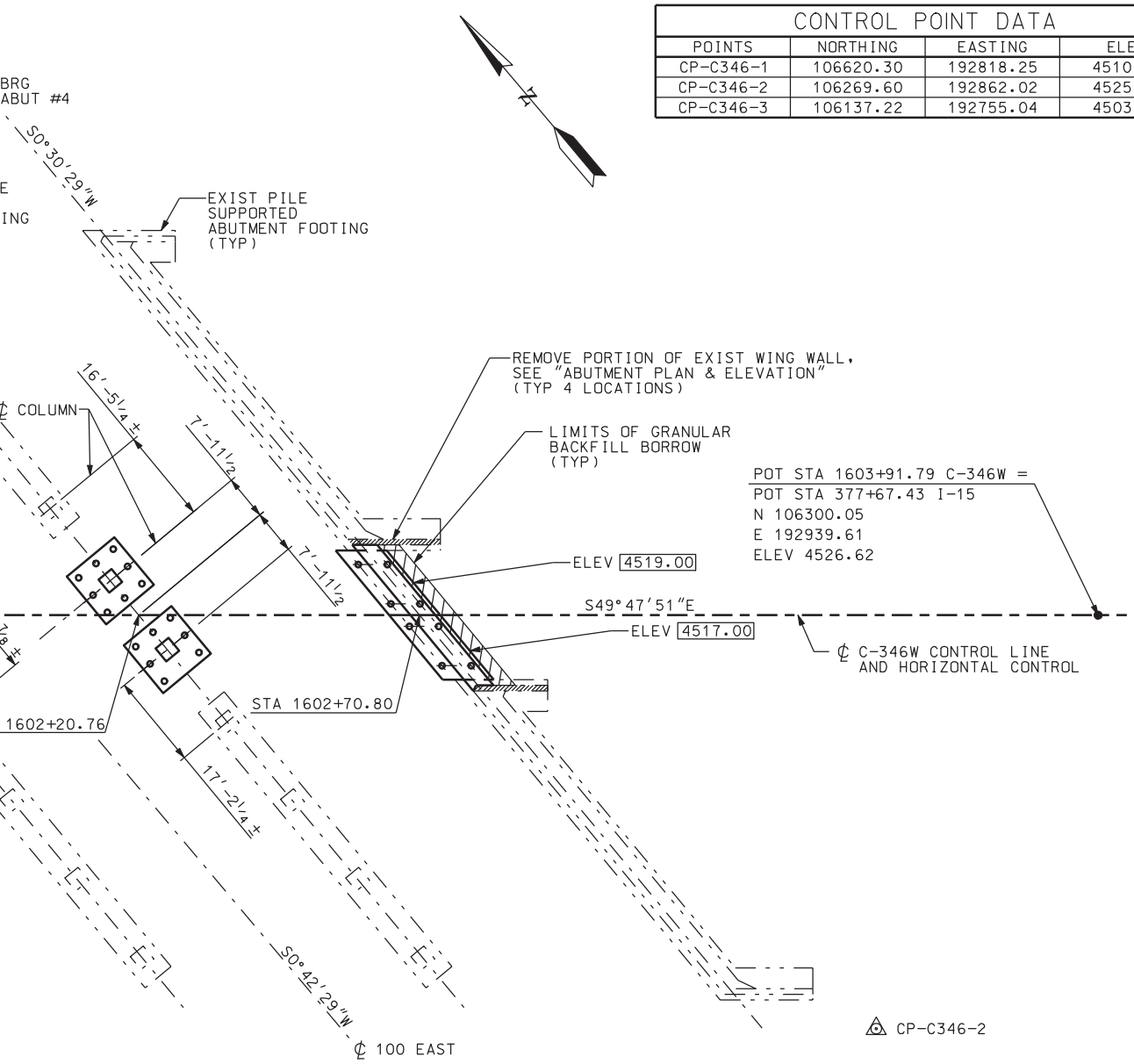


## FOUNDATION PLAN

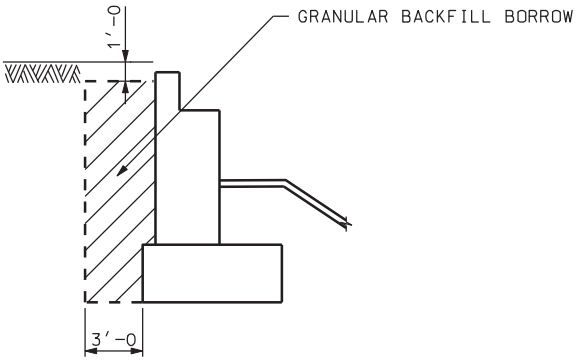


AT ABUTMENT

## LIMITS OF GRANULAR BACKFILL BORROW

## NOTES

1. ELEVATIONS AT THE BOTTOM OF FOOTING ARE SHOWN ENCLOSED IN RECANGLES E.G. 4501.00 .
2. SEE "DRIVEN PILE DETAILS" SHEET FOR PILE DETAILS.
3. LOCATE ℄ NEW COLUMNS AS AN EXTENSION OF THE BEARING ON THE "BEST FIT" LINE BETWEEN EXISTING COLUMNS.
4. ALIGN FRONT FACE OF ABUTMENT WALL ON THE "BEST FIT" LINE BETWEEN FRONT FACES OF THE EXISTING ABUTMENT WALLS.
5. GRANULAR BACKFILL BORROW HEIGHT IS COMPUTED FROM THE BOTTOM OF THE ABUTMENT TO THE BOTTOM OF THE APPROACH SLAB.
6. PROVIDE SOIL COVER OF MINIMUM 2'-0 FOR ALL FOOTINGS.
7. FIELD VERIFY NORTHING AND EASTING OF ALL CONTROL POINTS AS WELL AS THE RELATIVE ELEVATION DIFFERENCES BETWEEN ALL CONTROL POINTS. IF THE NORTHING, EASTING OR RELATIVE ELEVATION DIFFERENCES VARY BY MORE THAN ± 1" FROM WHAT IS GIVEN ON THIS SHEET, REPORT DISCREPANCIES TO THE ENGINEER AND STOP ALL CONSTRUCTION UNTIL DISCREPANCIES ARE RESOLVED.
8. BOTTOM OF FOOTING ELEVATIONS SHOWN AT ABUTMENTS ARE SHOWN AS REFERENCE. MATCH BOTTOM OF NEW ABUTMENT FOOTING WITH EXISTING.

| NO. | DATE | BY | REMARKS |
|---|---|---|---|

REVISIONS

UTAH DEPARTMENT OF TRANSPORTATION
SALT LAKE CITY, UTAH
STRUCTURES DIVISION

DESIGN KTF 09/04 CHECK PBB 09/04
DRAWN BLP 09/04 CHECK PBB 09/04
QUANT. CHECK

APPROVAL RECOMM. DATE SENIOR DESIGN ENGR.
APPROVED FOR USE BY UDOT DATE UDOT BRIDGE ENGR.

I-15; CORRIDOR IN UTAH COUNTY
100 EAST OVERPASS IN AMERICAN FORK
FOUNDATION PLAN
PROJECT NUMBER SP-15-6(52)241

UTAH
COUNTY

C-346W
DRG. NO.

SHT. 6 OF 28

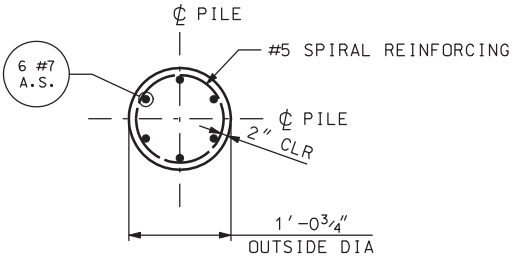


## SECTION A-A

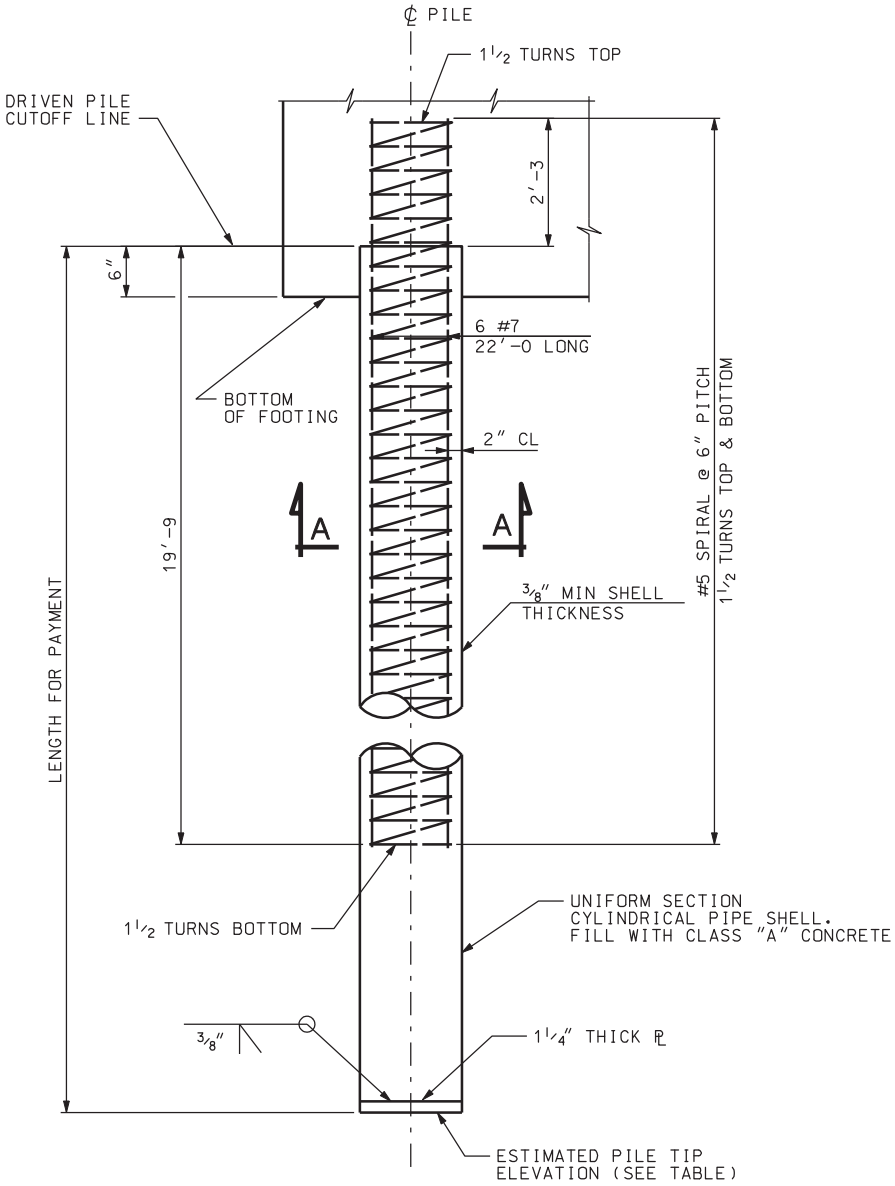


## ELEVATION

| PIL | | | |
|---|---|---|---|
| LOCATION | ESTIMATED PILE TIP ELEV (FEET) | ELEV OF MIN ACCEPTABLE PILE PENETRATION (FEET) | |
| ABUT #1 | 4442.0 | 4444.0 | |
| BENT #2 | 4441.0 | 4444.0 | |
| BENT #3 | 4444.0 | 4446.0 | |
| ABUT #4 | 4444.0 | 4446.0 | |

NOTE: SERVICE I PILE RESISTANCE WAS DETER

DGN File:IP_PWPcdns1717\4433_C-346-07_PILE01.dgn
02-MAY-2005

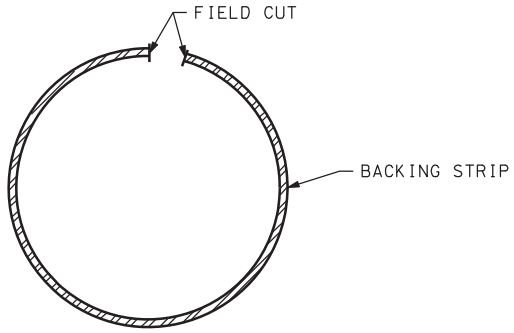


## NOTE

FIELD CUT PIECE OF PILE SO WHEN COMPRESSED IT WILL SLIDE INSIDE PILE SECTIONS.

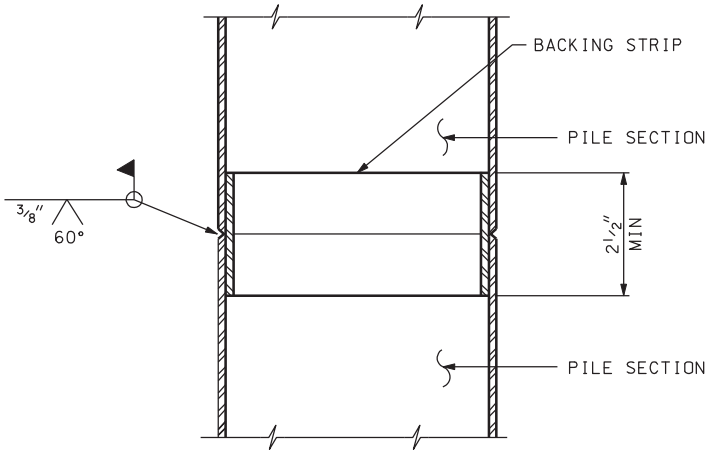


## SPLICE DETAIL

USE FULL STRENGTH WELDED SPLICES.

## NOTES

1. FILL PILE SHELLS WITH CLASS "A" CONCRETE.
2. HOLD REINFORCING STEEL ADEQUATELY IN FINAL POSITION DURING PLACEMENT OF CONCRETE AROUND BARS.
3. USE PILES MEETING ASTM A252 GRADE 3 WITH A MINIMUM YIELD STRENGTH OF 45 KSI.
4. PILE TIP ELEVATIONS ARE APPROXIMATE. VERIFY THESE ELEVATIONS AT THE TIME OF CONSTRUCTION IN ACCORDANCE WITH THE SPECIFICATIONS.
5. USE UNCOATED REINFORCEMENT FOR PILE EMBEDDED REINFORCEMENT.
6. USE A PILE HAMMER WITH A MINIMUM RATED ENERGY OF 30 KIP-FT.

E DATA

| SERVICE I PILE RESISTANCE (Kips) | STRENGTH I PILE RESISTANCE (Kips) | REQUIRED DRIVING RESISTANCE (Kips) | AS CONST. PILE TIP ELEV (FEET) |
|---|---|---|---|
| 313 | 162 | 321 | |
| 308 | 160 | 316 | |
| 312 | 167 | 328 | |
| 318 | 170 | 334 | |

MINED ASSUMING TOLERABLE SETTLEMENT OF 1 INCH.

| NO. | DATE | BY | REMARKS |
|---|---|---|---|

REVISIONS

UTAH DEPARTMENT OF TRANSPORTATION
SALT LAKE CITY, UTAH
STRUCTURES DIVISION

DESIGN PBB 10/04 CHECK JAR 10/04
DRAWN RDF 10/04 CHECK KMR 10/04
QUANT. PBB 11/04 CHECK KMR 11/04

APPROVAL RECOMM. DATE SENIOR DESIGN ENGR.
APPROVED FOR USE BY UDOT DATE UDOT BRIDGE ENGR.

I-15; CORRIDOR IN UTAH COUNTY
100 EAST OVERPASS IN AMERICAN FORK
DRIVEN PILE DETAILS

PROJECT NUMBER SP-15-6(52)241

UTAH
COUNTY

C-346W
DRG. NO.

SHT. 7 OF 28

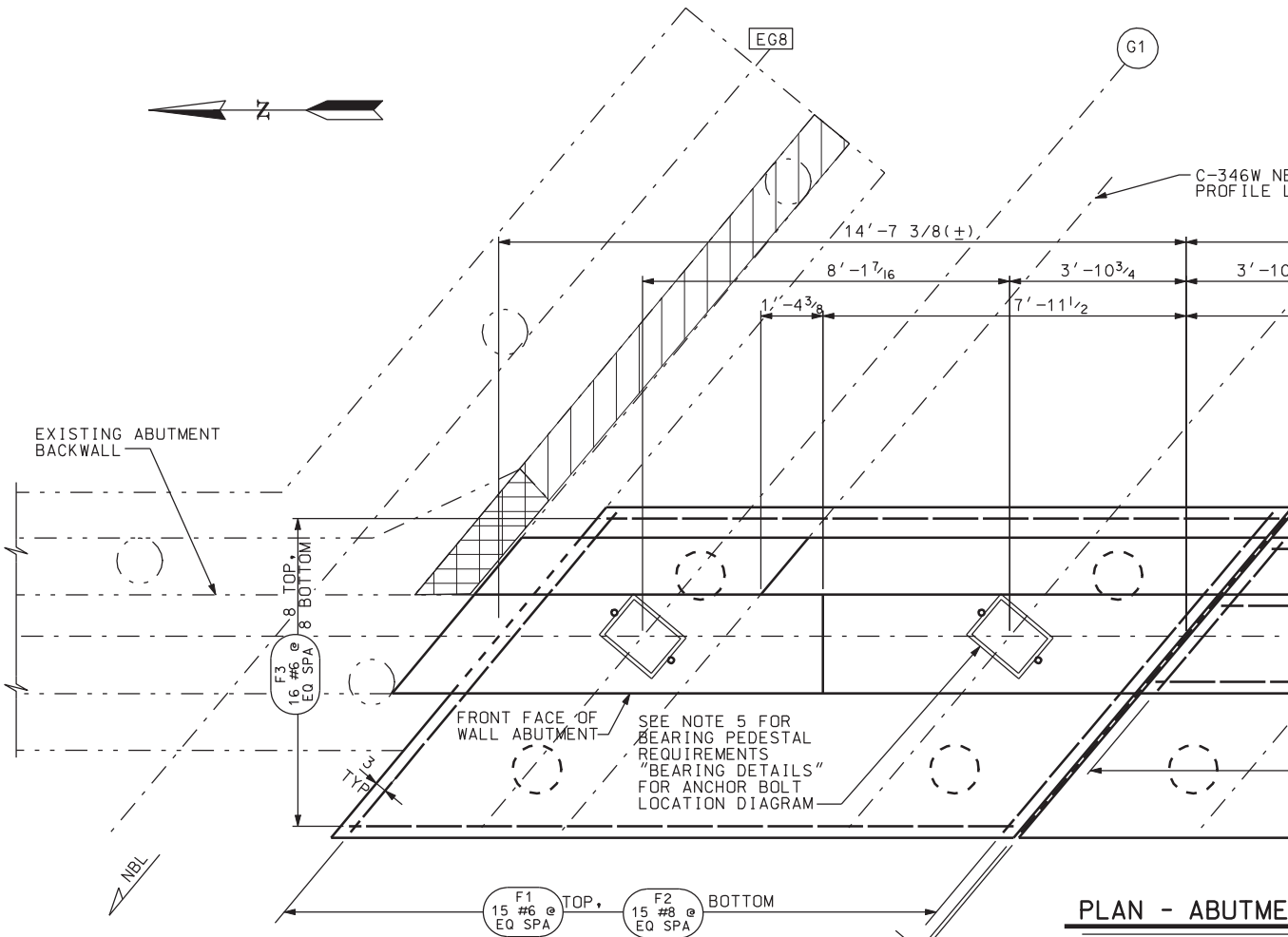


## PLAN - ABUTME

ABUTMENT 4 SHOWN, ABU
SHOWN FOR NORTH WIDEN

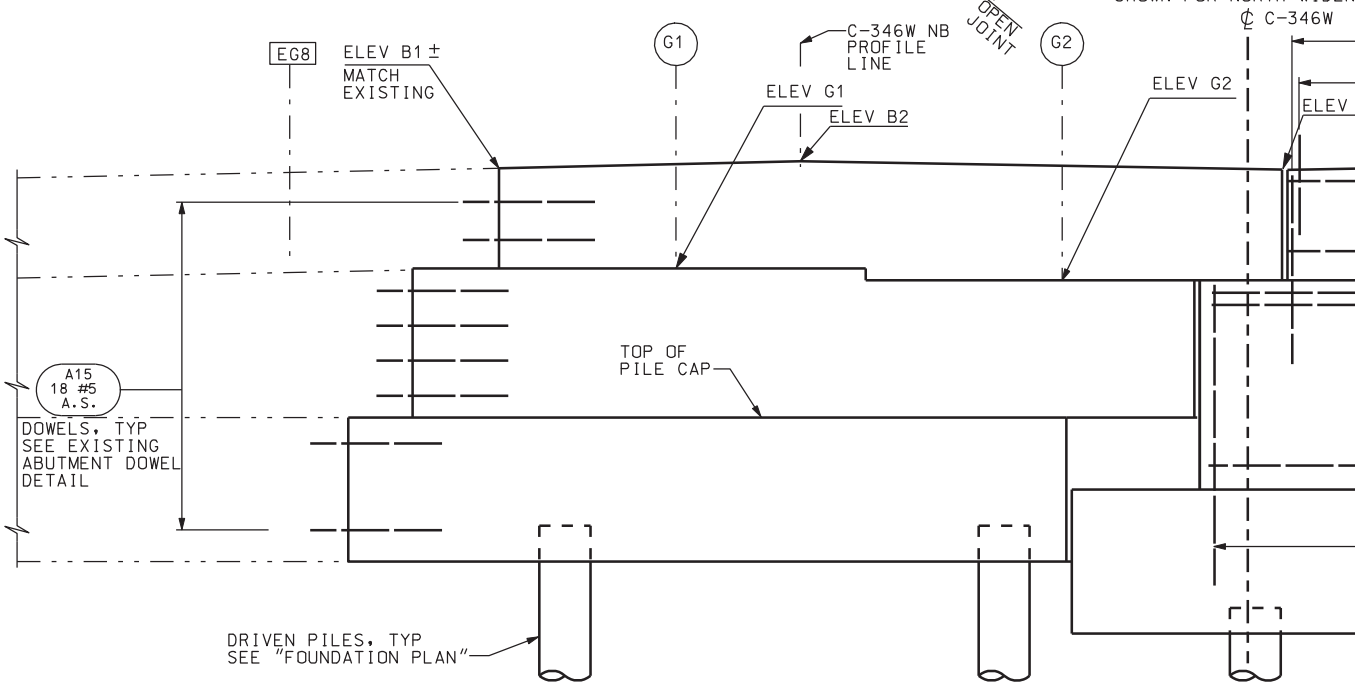


## ELEVATION - ABUTME

WALL REINFORCING SHOWN FO
NORTH WIDENING SIMILAR

### ELEVATION SCHEDULE (SEE NOTE 5)

| | ELEV G1 | ELEV G2 | ELEV G3 | ELEV G4 | ELEV B1 | ELEV B2 | ELEV B3 | ELEV B4 | ELEV B5 |
|---|---|---|---|---|---|---|---|---|---|
| ABUT #1 | 4525.29 | 4525.21 | 4525.20 | 4525.26 | 4527.61 | 4527.70 | 4527.52 | 4527.67 | 4527.57 |
| ABUT #4 | 4524.57 | 4524.45 | 4524.41 | 4524.44 | 4526.90 | 4526.96 | 4526.72 | 4526.85 | 4526.73 |

DGN File:IP_PWPcdms1717\4433_C-346-08_ABUT01.dgn
02-MAY-2005

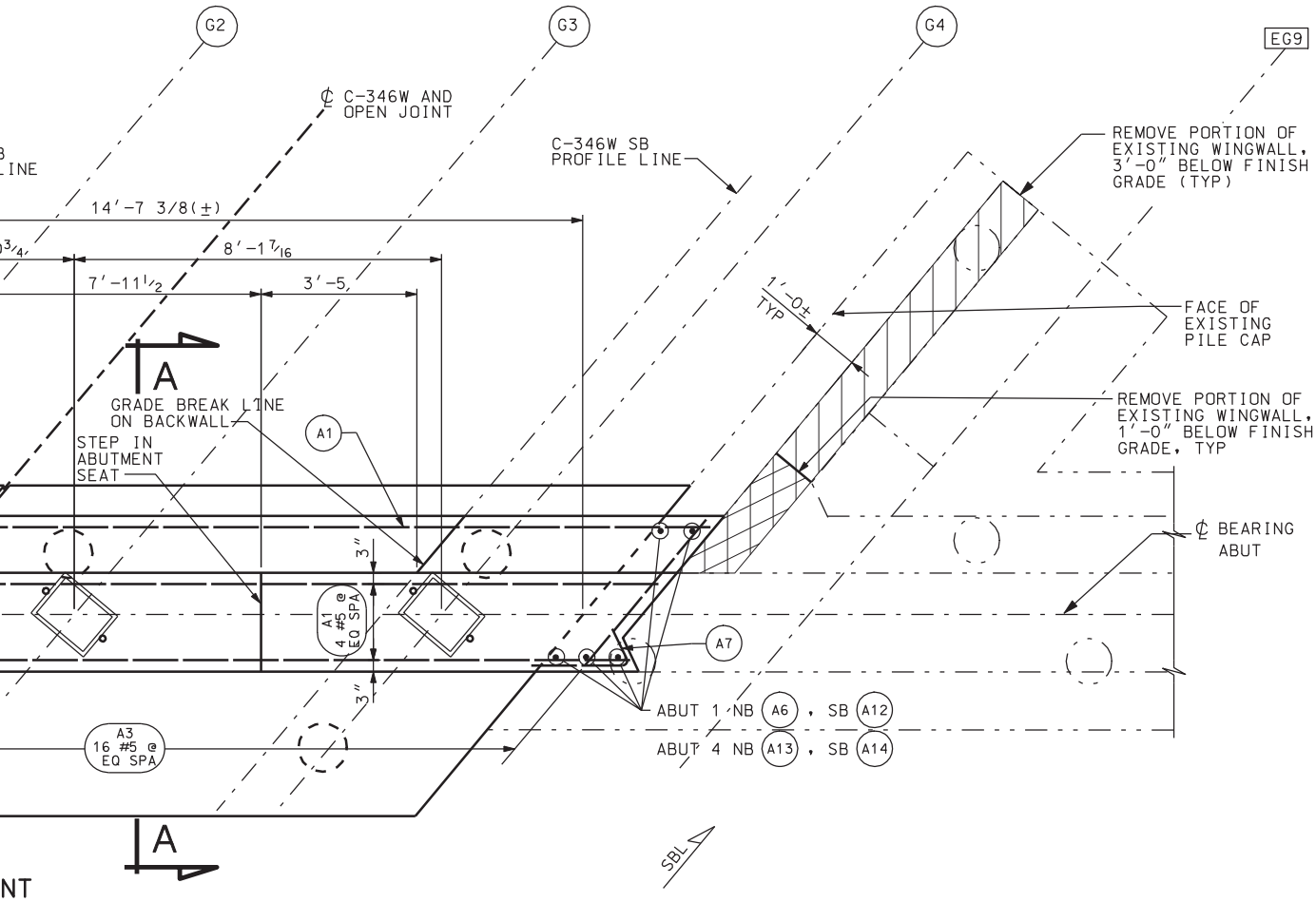


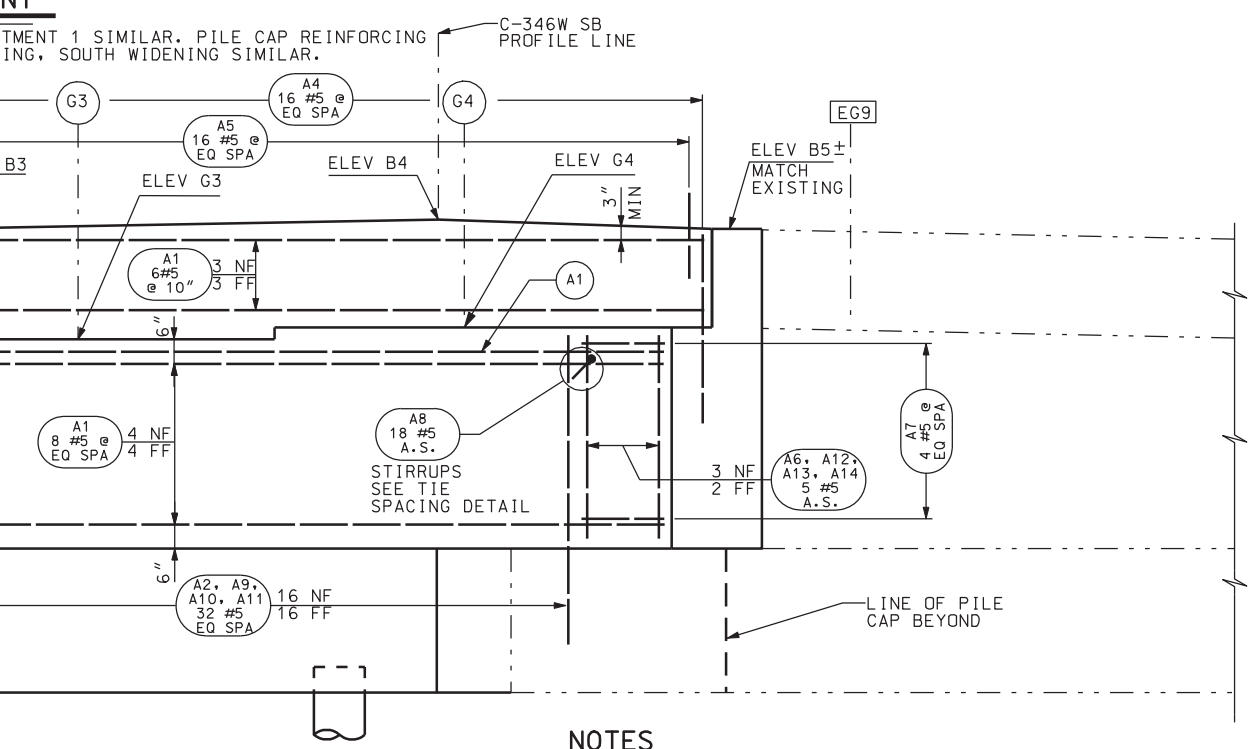


## NOTES

ENT

R SOUTH WIDENING,

1. FOR SECTIONS AND DETAILS, SEE "ABUTMENT DETAILS" SHEET.
2. FOR PILE LAYOUT AND BOTTOM OF FOOTING ELEVATIONS, SEE "FOUNDATION PLAN".
3. FOR BEARING AND ANCHOR BOLT DETAILS, SEE "BEARING DETAILS".
4. NF INDICATES NEAR FACE; FF INDICATES FAR FACE. ADJUST SPACING OF PILE CAP REINFORCING UP TO 4" TO ACCOMMODATE PILE REINFORCING.
5. PROVIDE BEARING PEDESTAL 1'-6x1'-2 AT EACH BEARING LOCATION. FINISH THE CONCRETE HIGH. RUB OR GRIND THE PEDESTAL SMOOTH AND LEVEL TO THE SPECIFIED HEIGHT.

| QUANTITIES STRUCTURAL CONCRETE | |
|---|---|
| ABUTMENT 1 & 4 | 78.7 CY |

| NO. | DATE | BY | REMARKS |
|---|---|---|---|
| | | | |

REVISIONS

UTAH DEPARTMENT OF TRANSPORTATION
SALT LAKE CITY, UTAH
STRUCTURES DIVISION

DESIGN JAR 10/04 CHECK KTF 10/04
DRAWN BLP 10/04 CHECK PBB 11/04
QUANT. KTF 10/04 CHECK JW 11/04

APPROVAL RECOMM. DATE SENIOR DESIGN ENGR.
APPROVED FOR USE BY UDOT DATE UDOT BRIDGE ENGR.

I-15; CORRIDOR IN UTAH COUNTY
100 EAST OVERPASS IN AMERICAN FORK
ABUTMENT PLAN & ELEVATION

PROJECT NUMBER SP-15-6(52)241

UTAH COUNTY

C-346W DRG. NO.

SHT. 8 OF 28

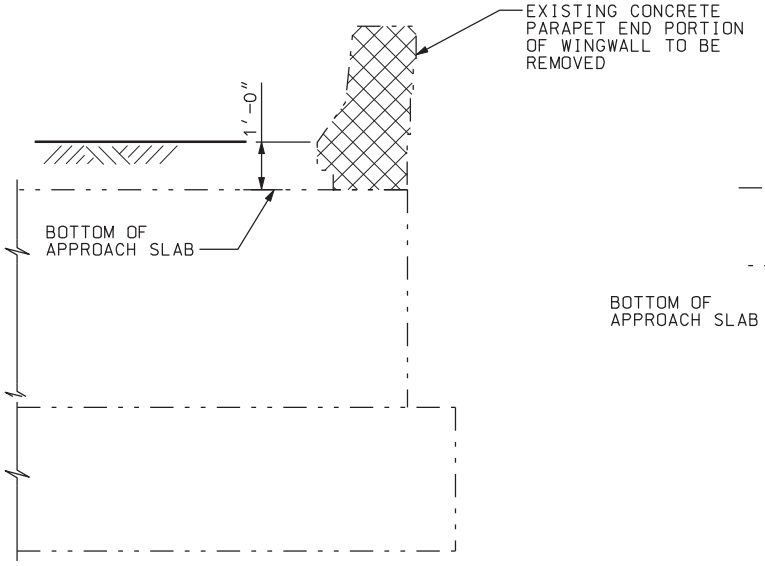


SECTION AT BACKWALL

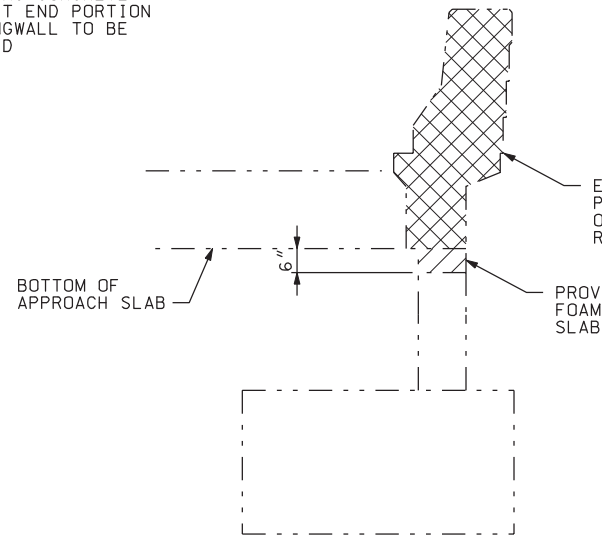


SECTION BEHIND BACKWALL

## WINGWALL REMOVAL DETAILS

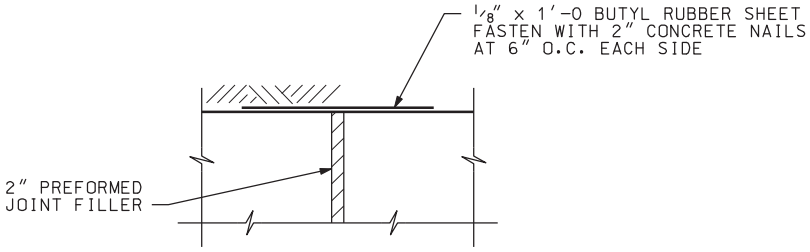


## CONTRACTION JOINT DETAIL

USE RUBBER SHEET ON FACES OF JOINT IN CONTACT WITH SOIL

## EPOXY ANCHORAGE NOTE

USE APPROVED EPOXY ANCHORAGE TO DEVELOP
PULLOUT STRENGTH OF 18.6 KIPS. 11 INCHE
ASSUMED IN SIZING THE REINFORCEMENT. DR
PREPARATION FOR ANCHORAGE OF REINFORCEME
CONCRETE REMOVAL ARE INCIDENTAL TO THE C
BID ITEM "PREPARE BRIDGE FOR WIDENING".

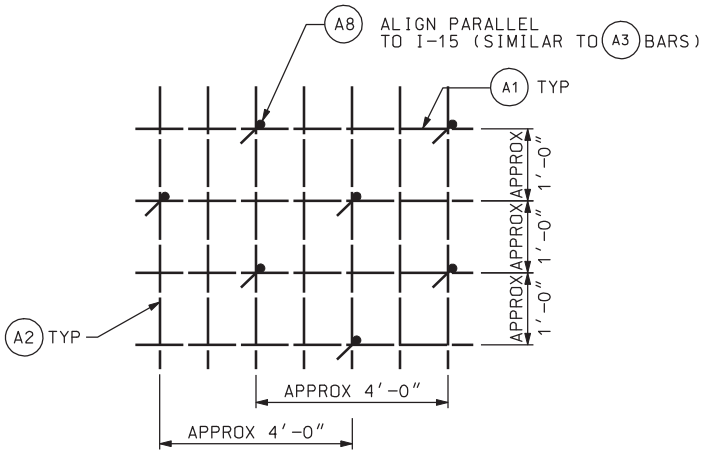


## TIE SPACING DETAIL

DGN File:IP_PWPcdns1717\4433_C-346-09_ABUTDT01.dgn
02-MAY-2005

XISTING CONCRETE
ARAPET AND PORTION
F WINGWALL TO BE
EMOVED

IDE RIGID PLASTIC
BETWEEN APPROACH
AND REMAINING WING WALL

A MINIMUM
S EMBEDMENT IS
ILLING AND
NT AND
OST FOR THE

NOTE:

REMOVE UNSOUND AND SPALLED CONCRETE TO DEPTH APPROVED BY THE ENGINEER.

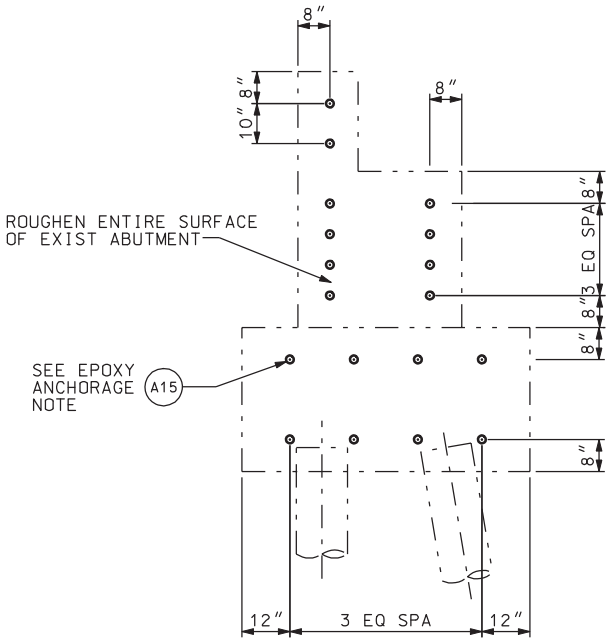


## EXISTING ABUTMENT DOWEL DETAIL

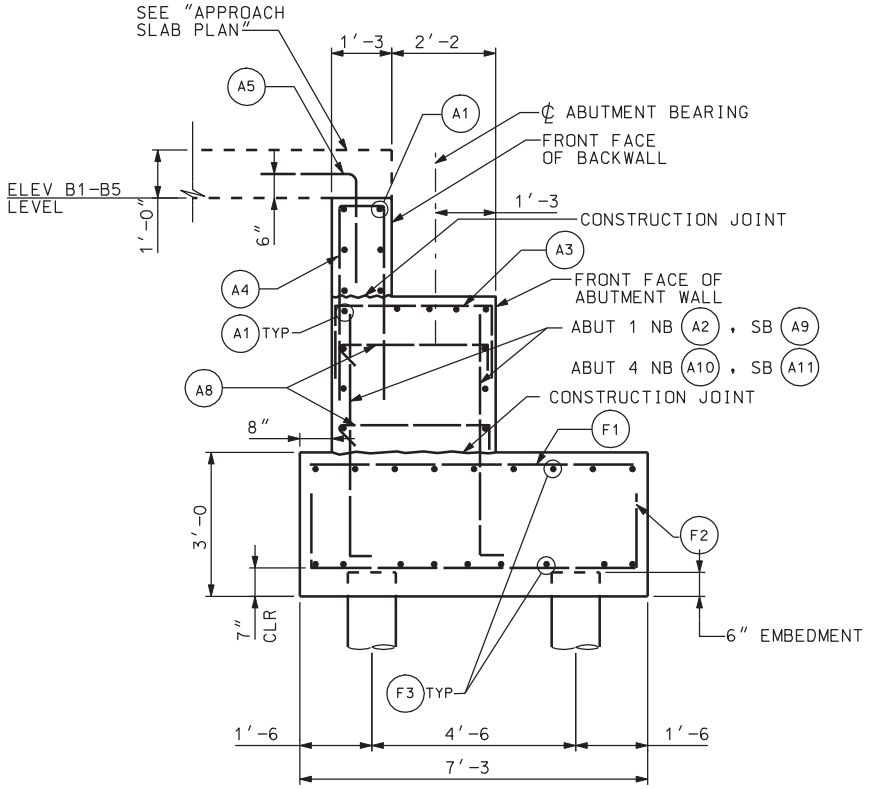


## SECTION A-A

| NO. | DATE | BY | REMARKS |
|---|---|---|---|
| | | | |

REVISIONS

UTAH DEPARTMENT OF TRANSPORTATION
SALT LAKE CITY, UTAH
STRUCTURES DIVISION

DESIGN JAR 10/04 CHECK KTF 10/04
DRAWN BLP 10/04 CHECK PBB 11/04
QUANT. KTF 10/04 CHECK JW 11/04

APPROVAL RECOMM. DATE SENIOR DESIGN ENGR.
APPROVED FOR USE BY UDOT DATE UDOT BRIDGE ENGR.

I-15; CORRIDOR IN UTAH COUNTY
100 EAST OVERPASS IN AMERICAN FORK
ABUTMENT DETAILS

PROJECT NUMBER SP-15-6(52)241

UTAH
COUNTY

C-346W
DRG. NO.

SHT. 9 OF 28

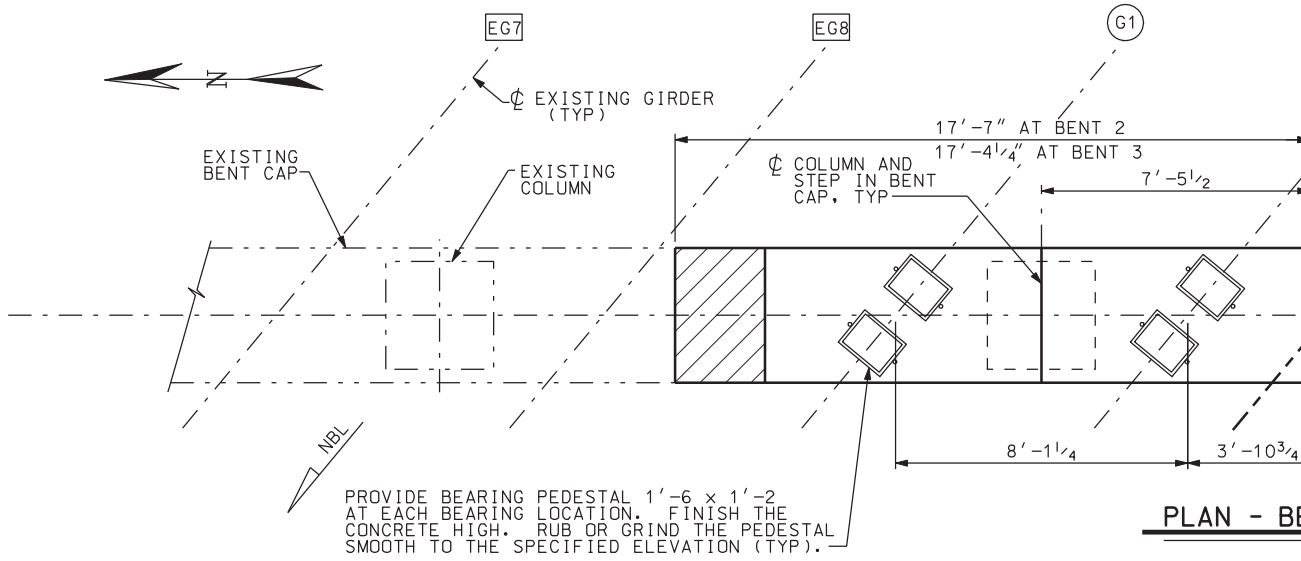


PLAN - BE

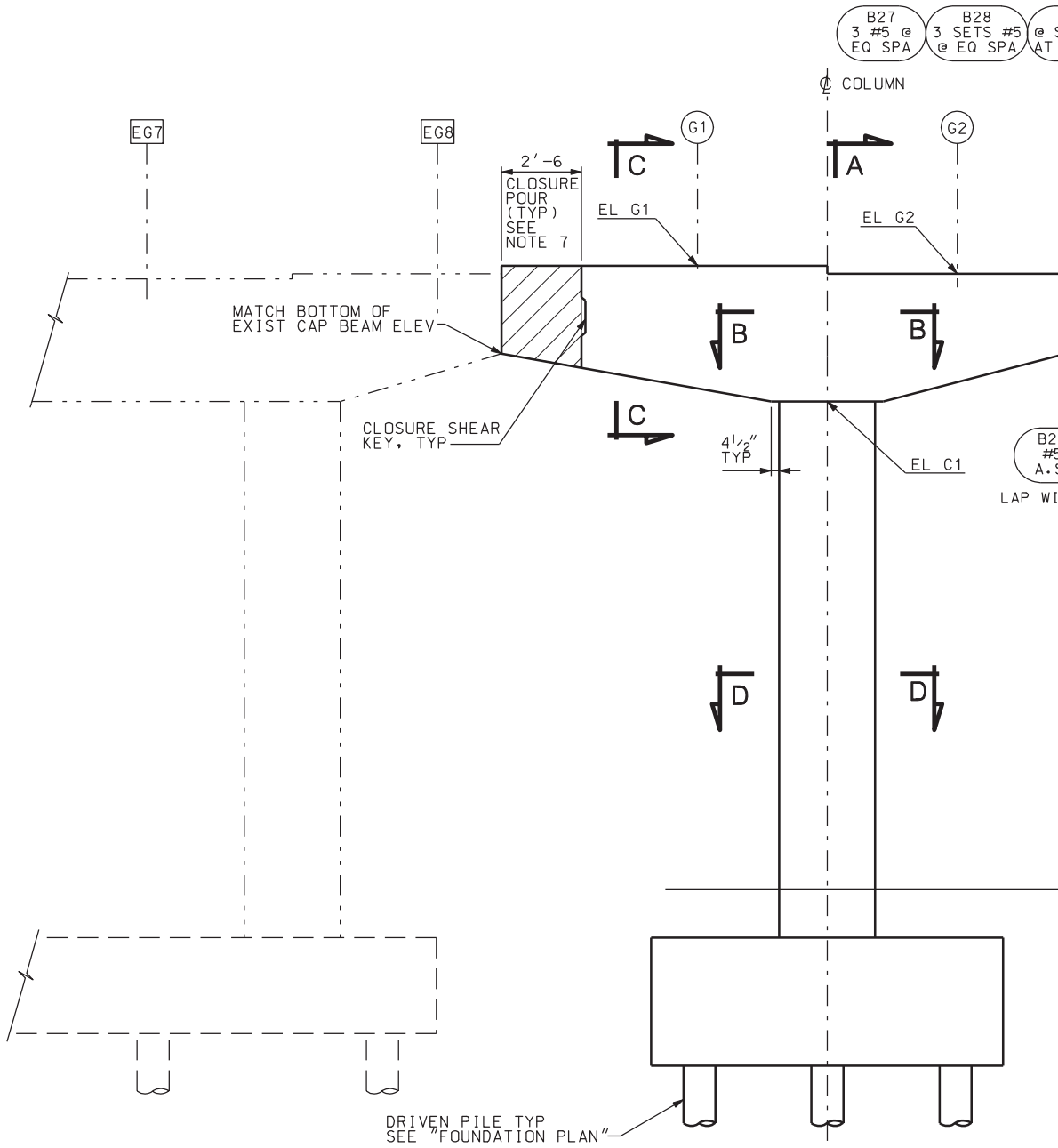


ELEVATION

CAP REINFORCING STE
NORTH BEN

DGN File:IP_PWPcdms1717\4433_C-346-10_BENT01.dgn

02-MAY-2005

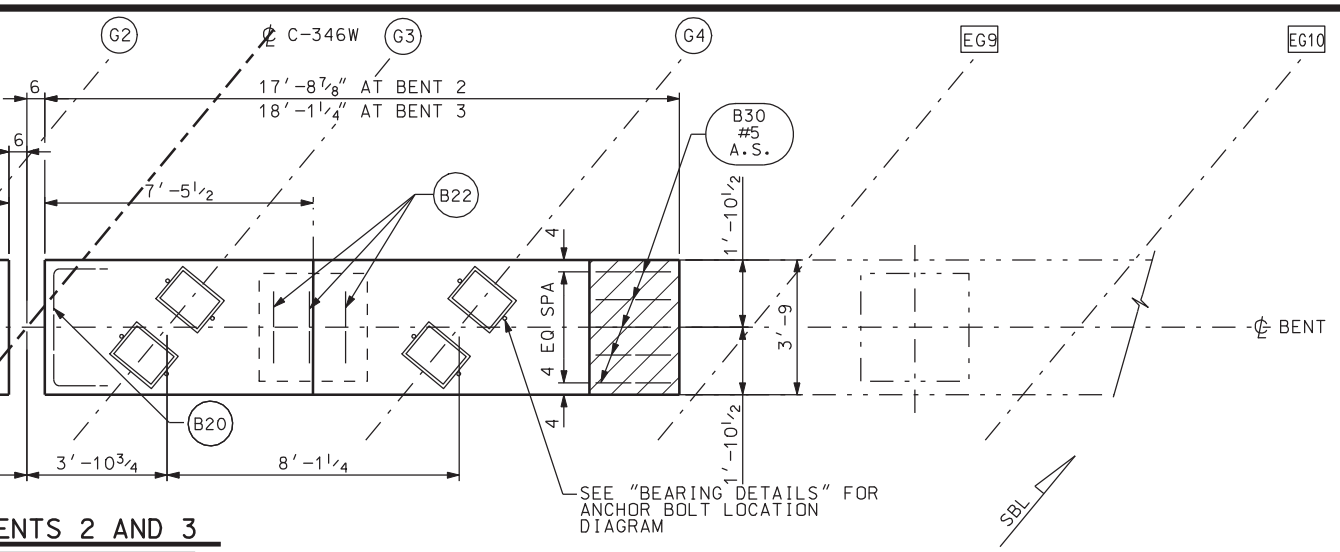


## ENTS 2 AND 3

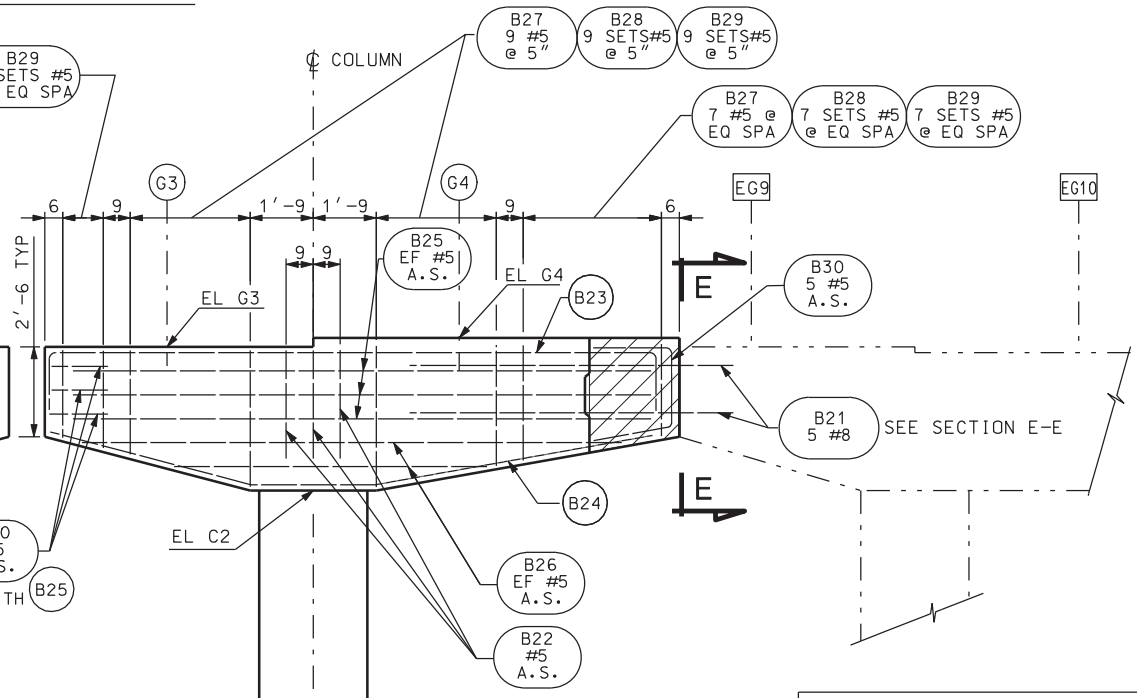


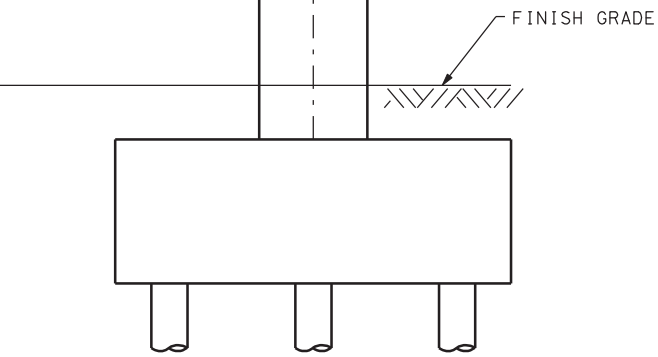


## ELEVATION SCHEDULE

| LOCATION | BENT 2 | BENT 3 |
|---|---|---|
| G1 | 4525.15 | 4524.91 |
| G2 | 4525.06 | 4524.80 |
| G3 | 4525.04 | 4524.77 |
| G4 | 4525.09 | 4524.81 |
| C1 | 4521.04 | 4520.77 |
| C2 | 4521.04 | 4520.77 |

## NOTES

1. PLACE STIRRUPS NORMAL TO ℄ BENT.
2. FOR SECTIONS AND COLUMN REINFORCING, SEE "BENT DETAILS".
3. FOR BOTTOM OF FOOTING ELEVATIONS, SEE "FOUNDATION PLAN".
4. FOR FOOTING REINFORCING, SEE "BENT FOOTING DETAILS".
5. SEE "BEARING DETAILS" FOR BEARING AND ANCHOR BOLT DETAIL. ADJUST SPACING OF BENT CAP REINFORCING UP TO 4" TO ACCOMMODATE ANCHOR BOLTS. MAINTAIN AT LEAST TWO BAR DIAMETERS CLEAR SPACING BETWEEN BARS.
6. EF = EACH FACE
   A.S. = AS SHOWN
7. PLACE BENT CAP CLOSURE AFTER DECK SLAB POUR SEQUENCE ② AND PRIOR TO ③, SEE "DECK SLAB PLAN".

## QUANTITIES
STRUCTURAL CONCRETE

| LOCATION | BENT 2 | BENT 3 |
|---|---|---|
| BENT CAP | 15.2 CY | 15.3 CY |
| COLUMN | 11.6 CY | 11.5 CY |
| TOTAL | 26.8 CY | 26.8 CY |

## - BENTS 2 AND 3

EL SHOWN FOR SOUTH BENT CAP,
NT CAP SIMILAR.

| NO. | DATE | BY | REMARKS |
|---|---|---|---|
| | | | |

REVISIONS

UTAH DEPARTMENT OF TRANSPORTATION
SALT LAKE CITY, UTAH
STRUCTURES DIVISION

DESIGN KTF 10/04 CHECK HE 11/04
DRAWN BLP 10/04 CHECK JW 11/04
QUANT. KTF 10/04 CHECK JW 11/04

APPROVAL RECOMM. DATE SENIOR DESIGN ENGR.
APPROVED FOR USE BY UDOT DATE UDOT BRIDGE ENGR.

I-15; CORRIDOR IN UTAH COUNTY
100 EAST OVERPASS IN AMERICAN FORK
BENT PLAN AND ELEVATION

PROJECT NUMBER SP-15-6(52)241

UTAH
COUNTY

C-346W
DRG. NO.

SHT. 10 OF 28

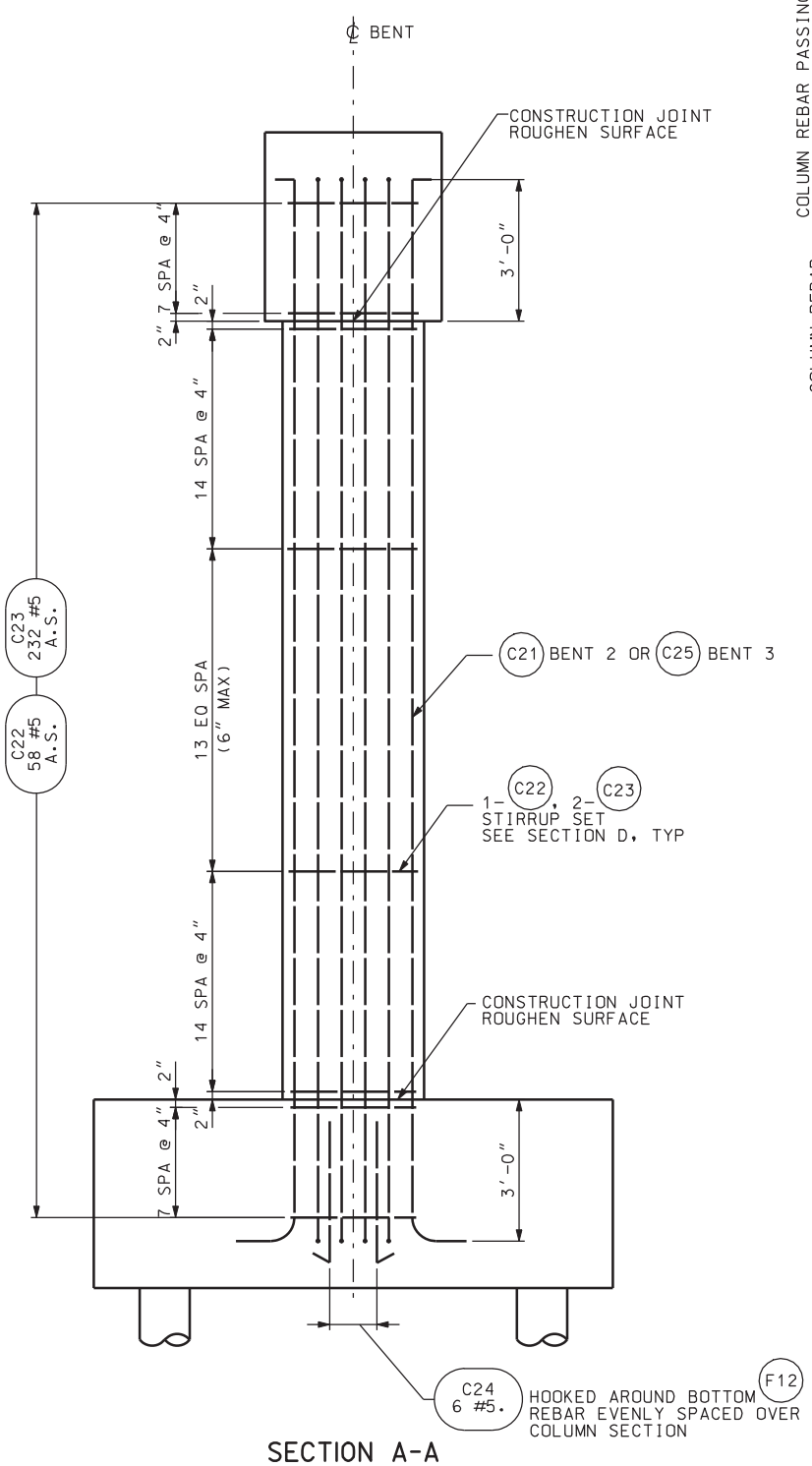


## SECTION A-A

SEE "BENT FOOTING DETAILS"
FOR FOOTING REINFORCEMENT.

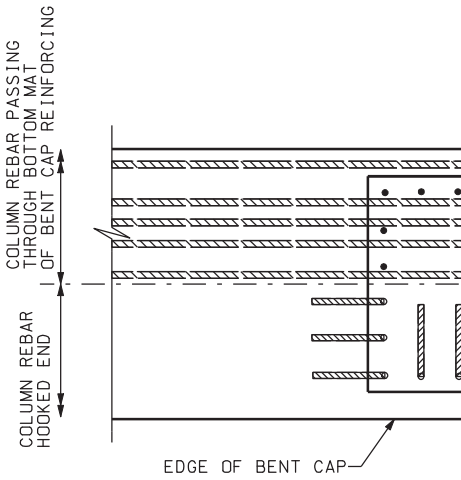


## SECTI

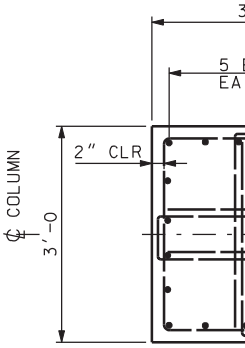


## SECTI

## EPOXY ANC

USE APPROVED EPOXY ANCH
PULLOUT STRENGTH OF 47.
ASSUMED IN SIZING THE R
PREPARATION FOR ANCHORA
CONCRETE REMOVAL ARE IN
BID ITEM "PREPARE BRIDG

DGN File: IP_PWPcdnsl717\4433_C-346-11_BENTDT01.dgn
02-MAY-2005

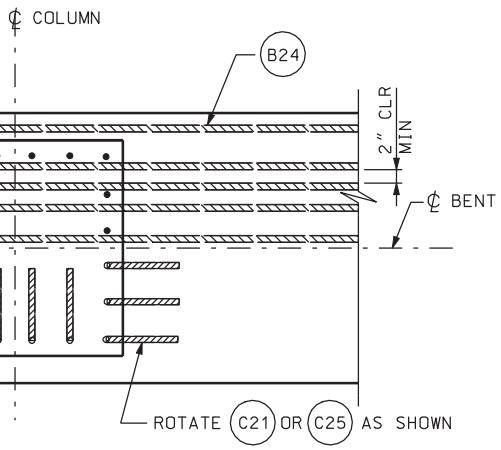


ON B-B

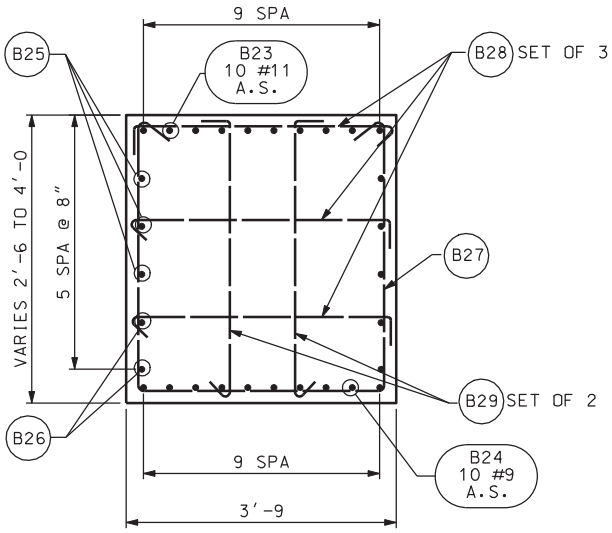


SECTION C-C

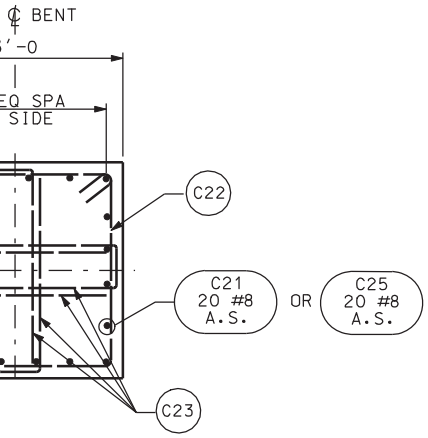


ON D-D

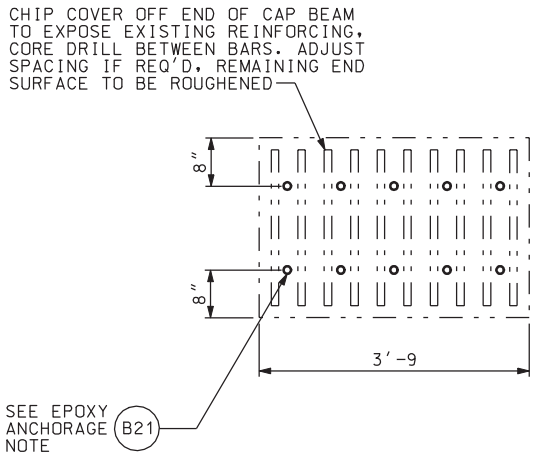


SECTION E-E

## HORAGE NOTE

ORAGE TO DEVELOP A MINIMUM
4 KIPS. 18 INCHES EMBEDMENT IS
EINFORCEMENT. DRILLING AND
GE OF REINFORCEMENT AND
CIDENTAL TO THE COST FOR THE
E FOR WIDENING".

## NOTES

1. ADJUST SPACING OF PILE CAP AND BENT CAP REINFORCING UP TO 4" TO ACCOMMODATE COLUMN REINFORCING. MAINTAIN AT LEAST THREE BAR DIAMETER SPACING.
2. ADJUST HOOP AND TIE REINFORCING TO AVOID CONFLICT WITH BENT CAP REINFORCING.

| NO. | DATE | BY | REMARKS |
|---|---|---|---|

REVISIONS

UTAH DEPARTMENT OF TRANSPORTATION
SALT LAKE CITY, UTAH
STRUCTURES DIVISION

DESIGN KTF 10/04 CHECK HE 11/04
DRAWN BLP 10/04 CHECK JW 11/04
QUANT. KTF 10/04 CHECK JW 11/04

APPROVAL RECOMM. DATE SENIOR DESIGN ENGR.
APPROVED FOR USE BY UDOT DATE UDOT BRIDGE ENGR.

I-15; CORRIDOR IN UTAH COUNTY
100 EAST OVERPASS IN AMERICAN FORK
BENT DETAILS
PROJECT NUMBER SP-15-6(52)241

UTAH
COUNTY

C-346W
DRG. NO.

SHT. 11 OF 28

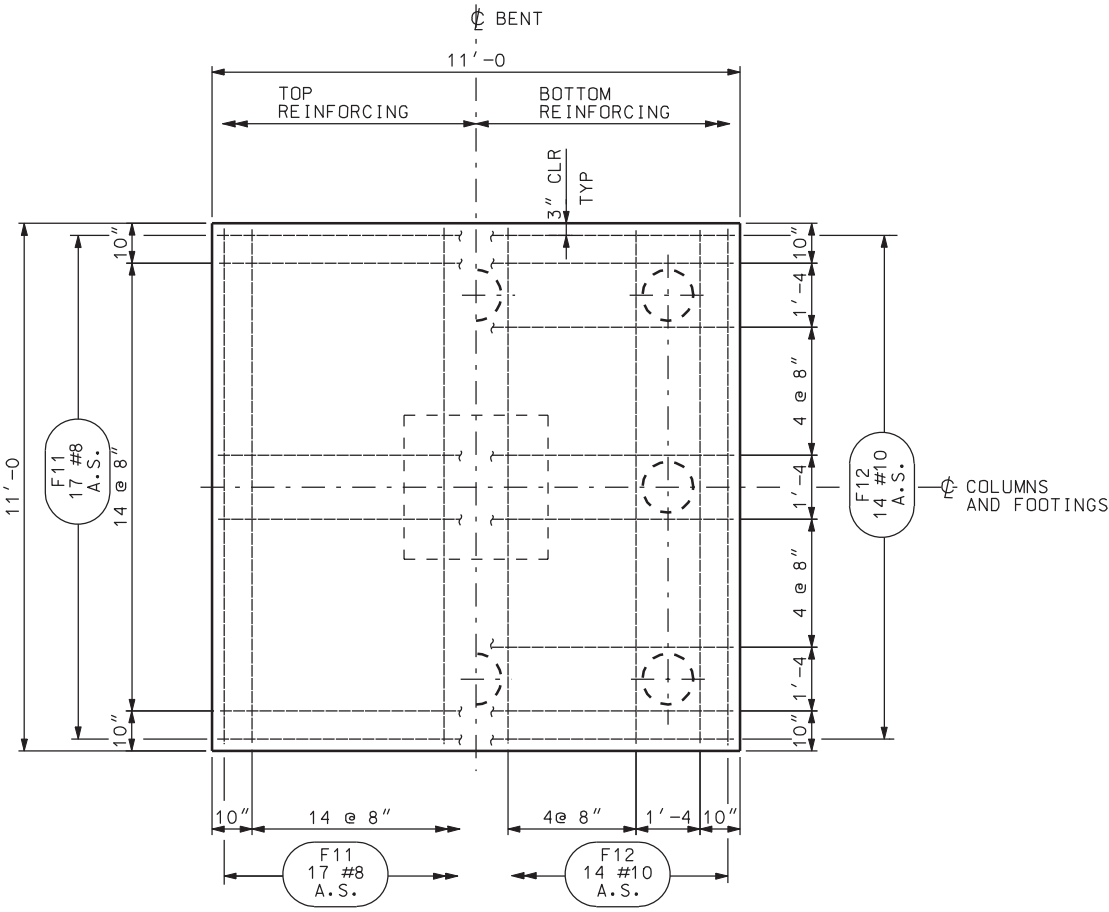


## FOOTING PLAN - BENTS 2 AND 3

ADJUST SPACING OF PILE CAP REINFORCEMENT UP TO 4" TO ACCOMMODATE COLUMN REINFORCEMENT AND PILE REINFORCEMENT.

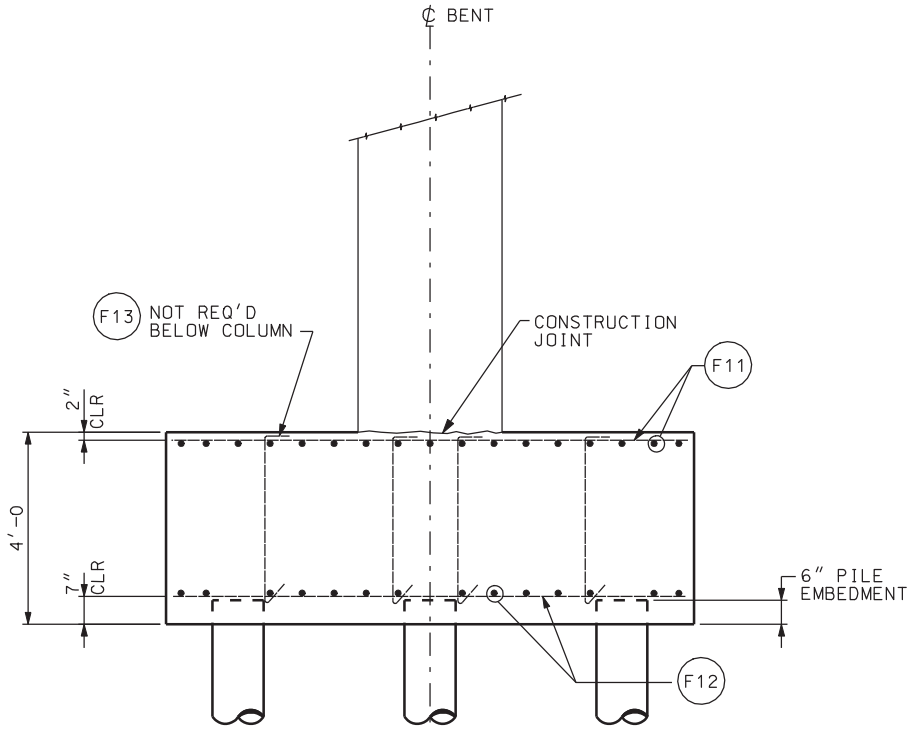


## ELEVATION - BENTS 2 AND 3

COLUMN AND PILE REINFORCEMENT NOT SHOWN FOR CLARITY.

DGN File:IP_PWPcdms1717\4433_C-346-12_BENT02.dgn
02-MAY-2005

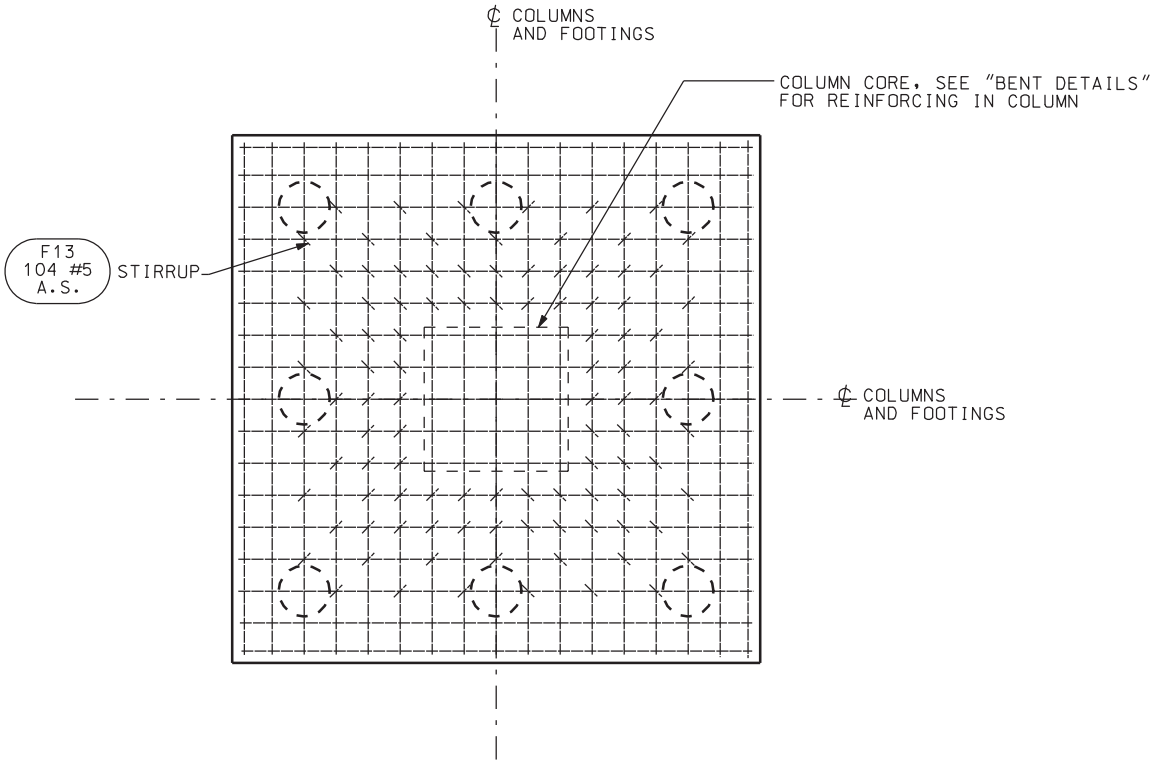


## FOOTING TIE SPACING

TOP REINFORCING SHOWN, HOOK BARS AROUND BOTTOM MAT OF REINFORCING AS SHOWN IN ELEVATION.

| QUANTITIES | |
|---|---|
| STRUCTURAL CONCRETE | |
| BENTS 2 & 3 (4 LOCATIONS) | 71.7 CY |

| NO. | DATE | BY | REMARKS |
|---|---|---|---|
| | | | |

REVISIONS

UTAH DEPARTMENT OF TRANSPORTATION
SALT LAKE CITY, UTAH
STRUCTURES DIVISION

DESIGN KTF 10/04 CHECK HE 11/04
DRAWN BLP 10/04 CHECK JW 11/04
QUANT. KTF 11/04 CHECK JW 11/04

APPROVAL RECOMM. DATE SENIOR DESIGN ENGR.
APPROVED FOR USE BY UDOT DATE UDOT BRIDGE ENGR.

I-15; CORRIDOR IN UTAH COUNTY
100 EAST OVERPASS IN AMERICAN FORK
BENT FOOTING DETAILS

PROJECT NUMBER SP-15-6(52)241

UTAH
COUNTY

C-346W
DRG. NO.

SHT. 12 OF 28

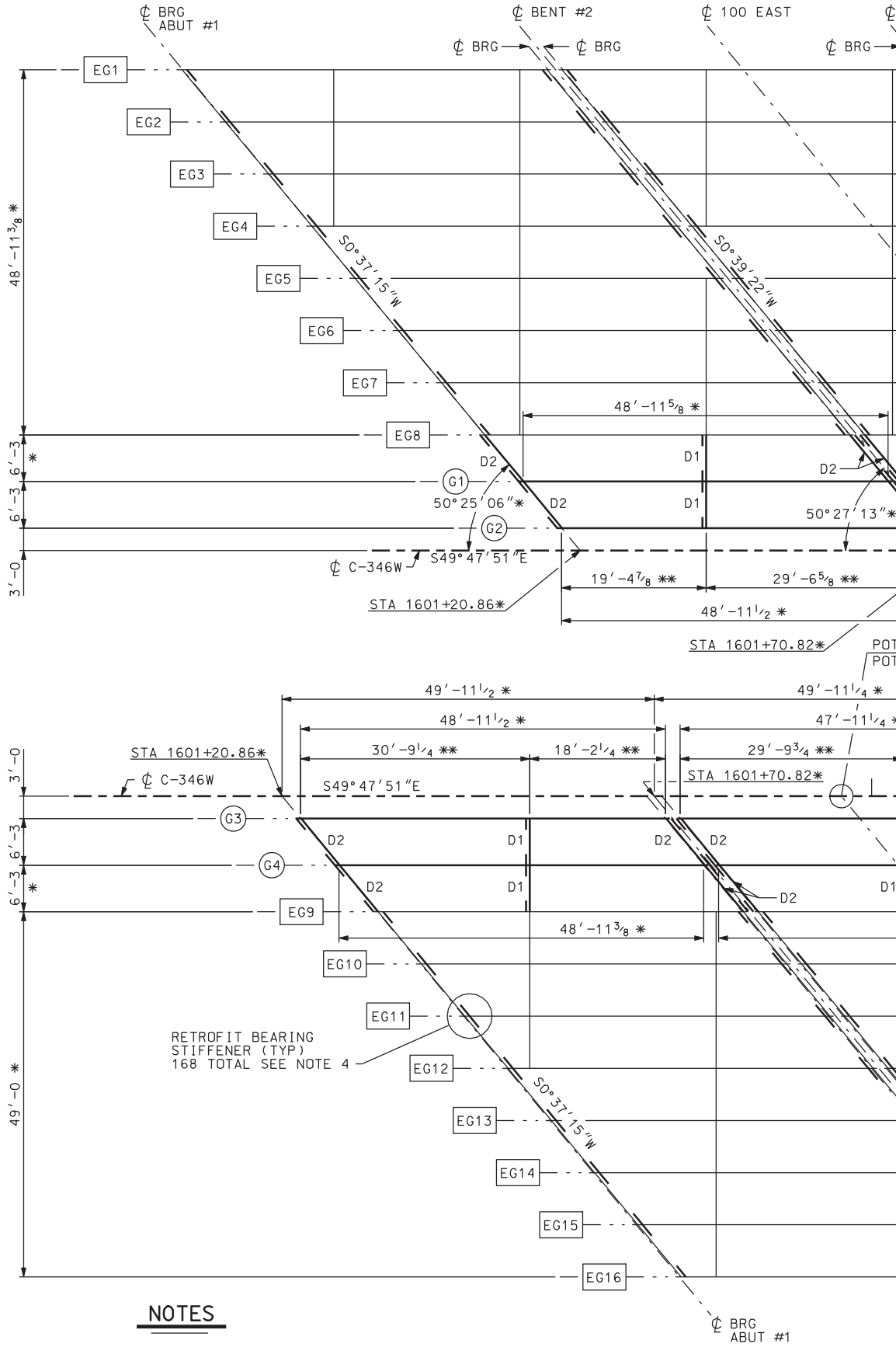


## NOTES

1. (G1) (G2) (G3) (G4) ARE PARALLEL TO BEARING S49°47′51″E.
2. SEE "GIRDER DETAILS" SHEET FOR GIRDER ELEVATIONS AND GENERAL NOTES.
3. SEE "DIAPHRAGM DETAILS 1" SHEET FOR DIAPHRAGM LAYOUT.
4. SEE "DIAPHRAGM DETAILS 2" FOR RETROFIT BEARING DETAILS AT EACH EXISTING BEARING.

FRAMING

DGN File:IP_PWPcdms1717\4433_C-346-13_FRAM01.dgn

02-MAY-2005

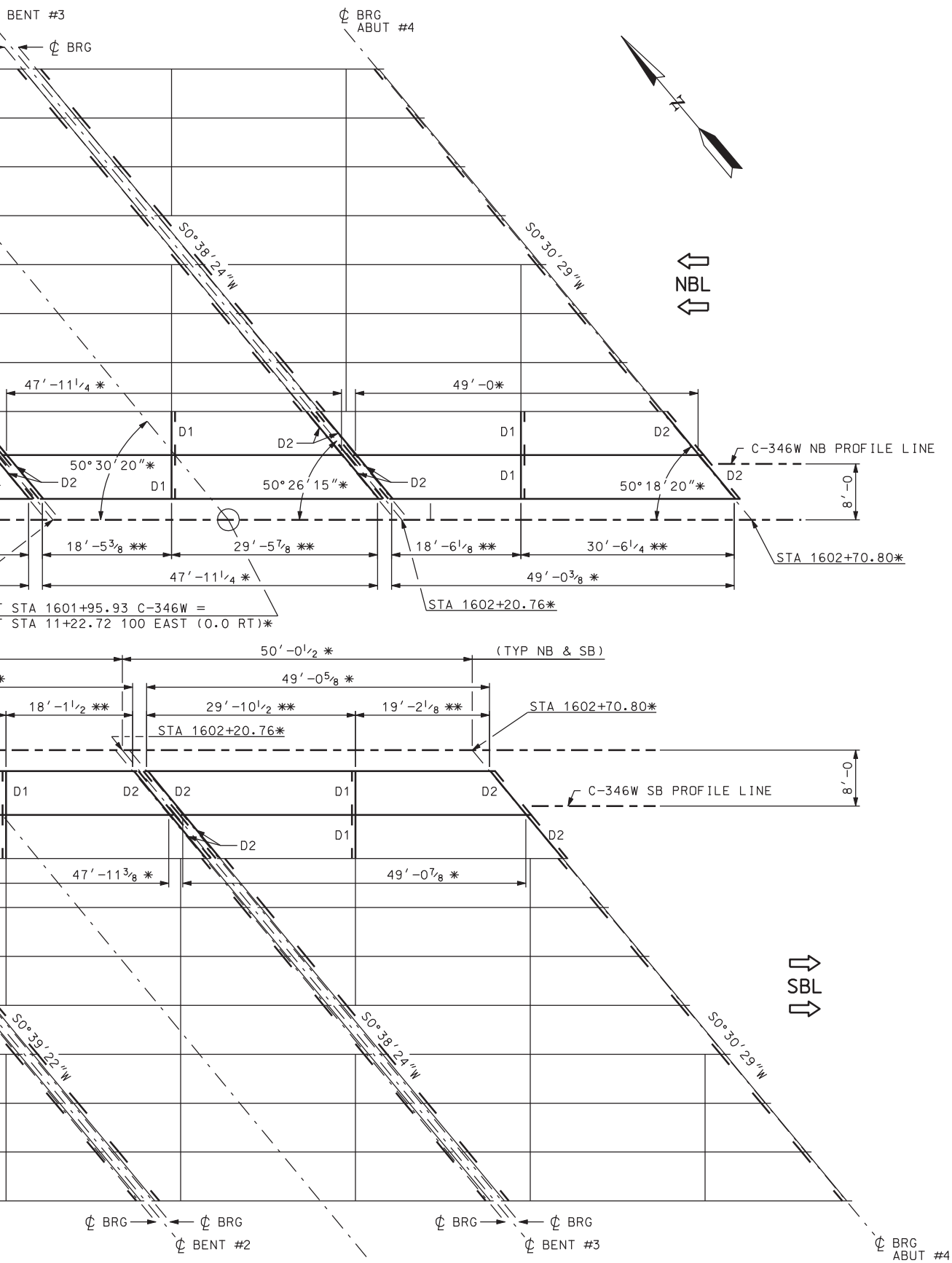


✱ SEE "SITUATION & LAYOUT 1" SHEET GENERAL NOTE 6.

✱✱ FIELD VERIFY EXISTING DIAPHRAGM LOCATION. LINE UP NEW DIAPHRAGM WITH EXISTING DIAPHRAGMS.

EG1 — - — - · EXISTING GIRDER MARK NUMBER

(G1) — - — - — NEW GIRDER MARK NUMBER

G PLAN

| NO. | DATE | BY | REMARKS |
|---|---|---|---|
| | | | |

REVISIONS

UTAH DEPARTMENT OF TRANSPORTATION
SALT LAKE CITY, UTAH
STRUCTURES DIVISION

DESIGN JW 08/04 CHECK JY 08/04
DRAWN JW 09/04 CHECK PBB 09/04
QUANT. CHECK

APPROVAL RECOMM. DATE SENIOR DESIGN ENGR.
APPROVED FOR USE BY UDOT DATE UDOT BRIDGE ENGR.

I-15; CORRIDOR IN UTAH COUNTY
100 EAST OVERPASS IN AMERICAN FORK
FRAMING PLAN
PROJECT NUMBER SP-15-6(52)241

UTAH
COUNTY

C-346W
DRG. NO.

SHT. 13 OF 28

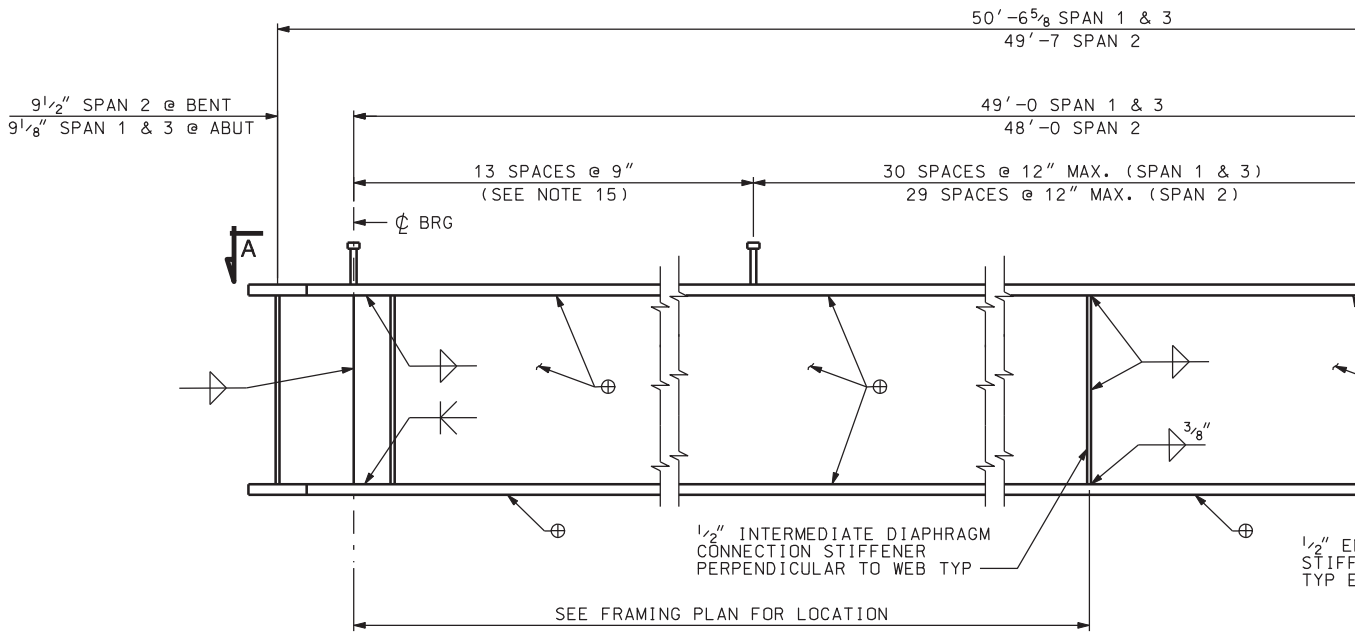


## GIRDER ELEVATION

W27x129 GIRDER

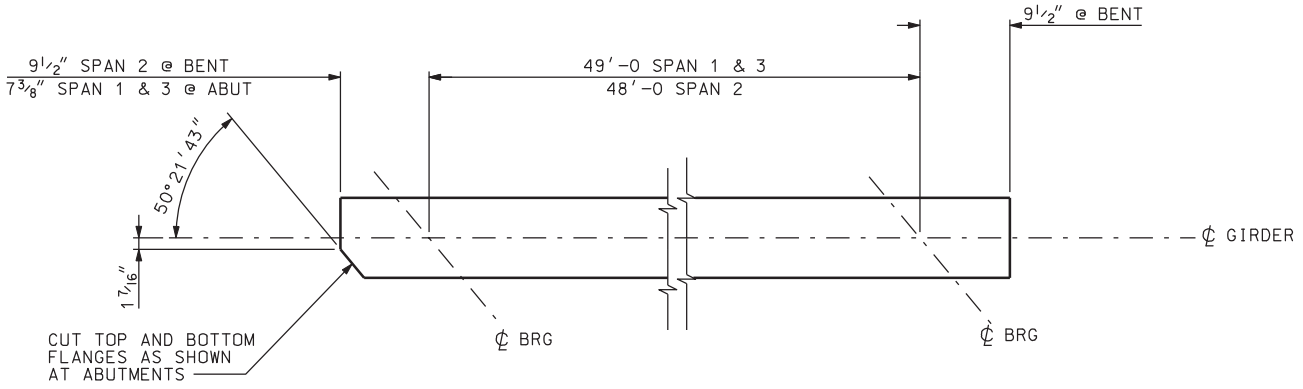


## SECTION A-A

DGN File:IP_PWPcdnsl717\4433_C-346-14_STEEL01.dgn

02-MAY-2005

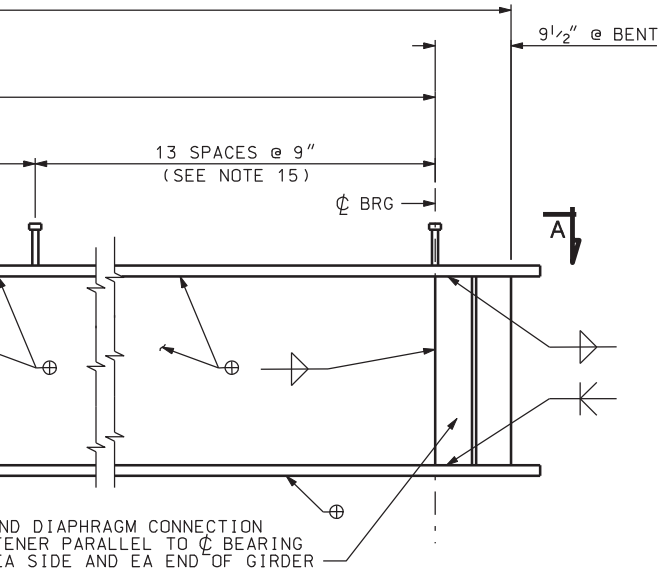


## NOTES

1. ERECT THE GIRDERS WITH THE NATURAL CAMBER UP.
2. PERFORM CHARPY V-NOTCH TOUGHNESS TEST ON ALL MAIN LOAD CARRYING MEMBERS, INDICATED BY ⊕, TO MEET REQUIREMENTS FOR ZONE 2.
3. ALL DIMENSIONS SHOWN ARE HORIZONTAL. ADJUST LENGTHS AS NECESSARY IN FABRICATION TO TAKE VERTICAL GRADE INTO ACCOUNT.
4. ALL INTERMEDIATE DIAPHRAGMS ARE NORMAL TO THE WEB. BEARING STIFFENERS ARE PARALLEL TO THE CENTERLINE OF BEARINGS.
5. CENTERLINES OF GIRDERS ARE PARALLEL TO CENTERLINE C-346W.
6. INCLUDE THE PRICE FOR SHEAR STUDS, BOLTS AND STIFFENERS IN THE CONTRACT PRICE FOR STRUCTURAL STEEL.
7. SEE "BEARING DETAILS" SHEET FOR SOLE PLATE AND BEARING DETAILS.
8. USE STRUCTURAL STEEL CONFORMING TO AASHTO M270 GRADE 36 MINIMUM FOR ALL STRUCTURAL STEEL.
9. CONFORM WELDING, WELDER QUALIFICATIONS, PREQUALIFICATION OF WELD DETAILS AND INSPECTION OF WELDS TO THE REQUIREMENTS OF THE ANSI/AASHTO/AWS BRIDGE WELDING CODE D1.5.
10. THE METHODS OF JOINT PREPARATION FOR WELDING SHOWN ON THE PLANS ARE BASED ON THE USE OF MANUAL SHIELDED METAL-ARC WELDING. THE USE OF THIS OR ANY OTHER WELDING PROCESS WILL BE SATISFACTORY ONLY AFTER THE WELDING PROCEDURE HAS BEEN SUBMITTED BY THE CONTRACTOR AND APPROVED BY THE ENGINEER.
11. USE THE MINIMUM SIZED STRENGTH FILLET WELDS REQUIRED BY ANSI/AASHTO/AWS BRIDGE WELDING CODE D1.5 FOR THE THICKNESS OF THE MATERIAL JOINED UNLESS OTHERWISE SPECIFIED. USE MINIMUM FILLET WELD SIZE OF 1/4", EXCEPT WHERE NOTED OTHERWISE.
12. DIMENSIONS SHOWN ON THE PLANS ASSUME THE AMBIENT TEMPERATURE OF THE GIRDER TO BE 70°F . CORRECT THE LENGTH USED IN FABRICATION AT THE RATE OF 1/16" PER EACH 100' OF LENGTH FOR EVERY 10°F DIFFERENCE IN TEMPERATURE TO ALLOW FOR EXPANSION AND CONTRACTION.
13. DO NOT FIELD WELD TO GIRDERS EXCEPT WHERE NOTED OTHERWISE.
14. ALL BOLTED CONNECTIONS SHALL BE MADE WITH 7/8" DIA. HIGH STRENGTH BOLTS CONFORMING TO ASTM A325, TYPE 1, UNLESS NOTED OTHERWISE.

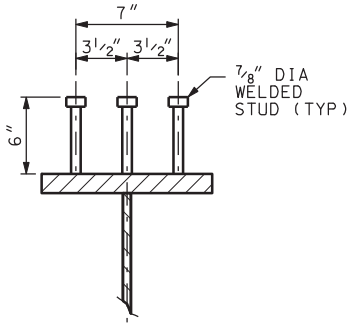


SHEAR STUD DETAIL

| NO. | DATE | BY | REMARKS |
|---|---|---|---|
| | | | |

REVISIONS

UTAH DEPARTMENT OF TRANSPORTATION
SALT LAKE CITY, UTAH
STRUCTURES DIVISION

DESIGN JW 08/04 CHECK JY 08/04
DRAWN JW 08/04 CHECK PBB 09/04
QUANT. JW 10/04 CHECK PBB 10/04

APPROVAL RECOMM. DATE SENIOR DESIGN ENGR.
APPROVED FOR USE BY UDOT DATE UDOT BRIDGE ENGR.

I-15; CORRIDOR IN UTAH COUNTY
100 EAST OVERPASS IN AMERICAN FORK
GIRDER DETAILS

PROJECT NUMBER SP-15-6(52)241

UTAH
COUNTY

C-346W
DRG. NO.

SHT. 14 OF 28

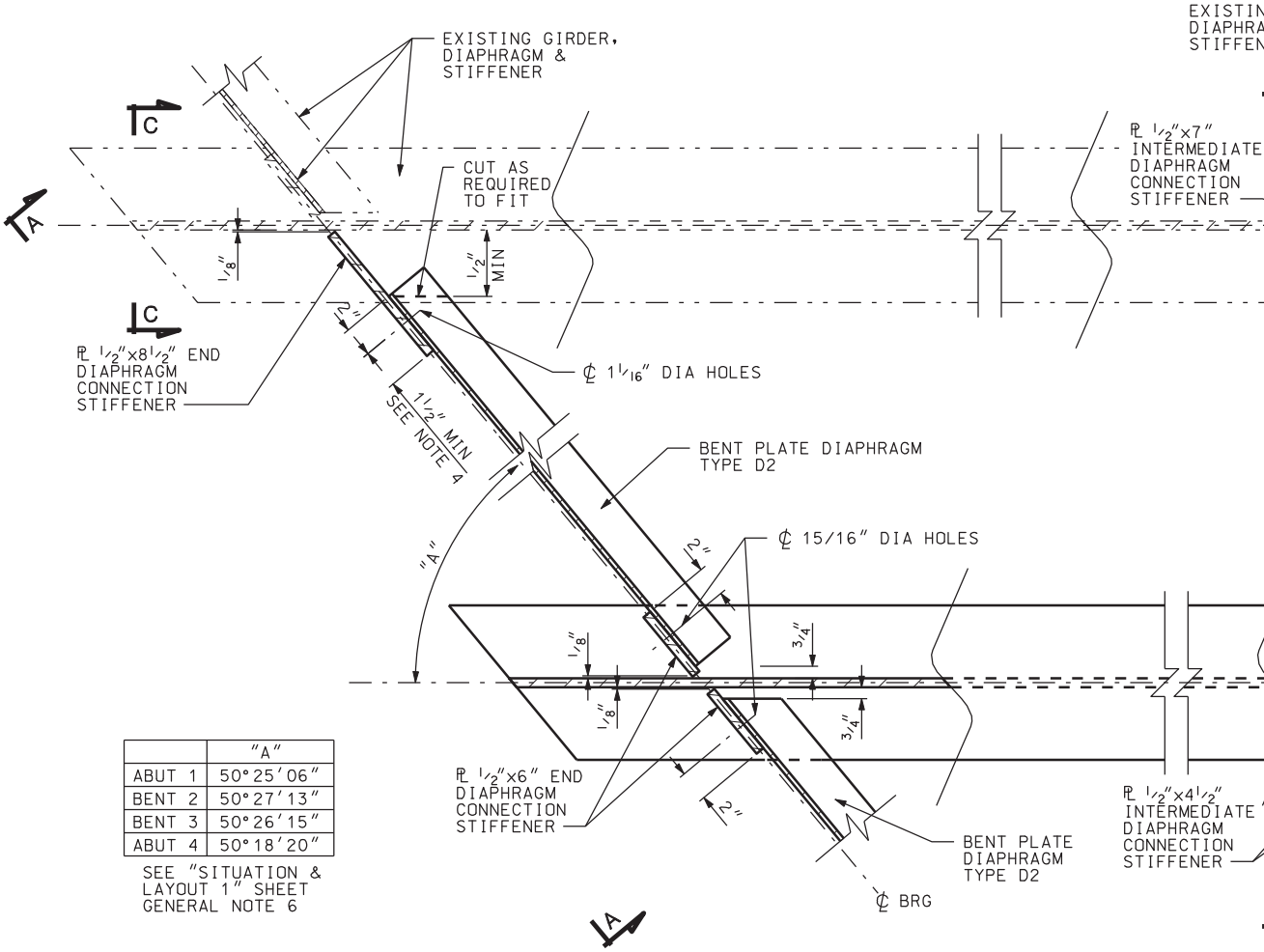


| | "A" |
|---|---|
| ABUT 1 | 50°25'06" |
| BENT 2 | 50°27'13" |
| BENT 3 | 50°26'15" |
| ABUT 4 | 50°18'20" |

SEE "SITUATION & LAYOUT 1" SHEET GENERAL NOTE 6

## DIAPHRAGM

NOTE: G1 IS SHOWN. G4 IS SIMILAR (OPP
ONE SIDE STIFFENER AND DIAPHRAGM
REQUIRED FOR G2 AND G3

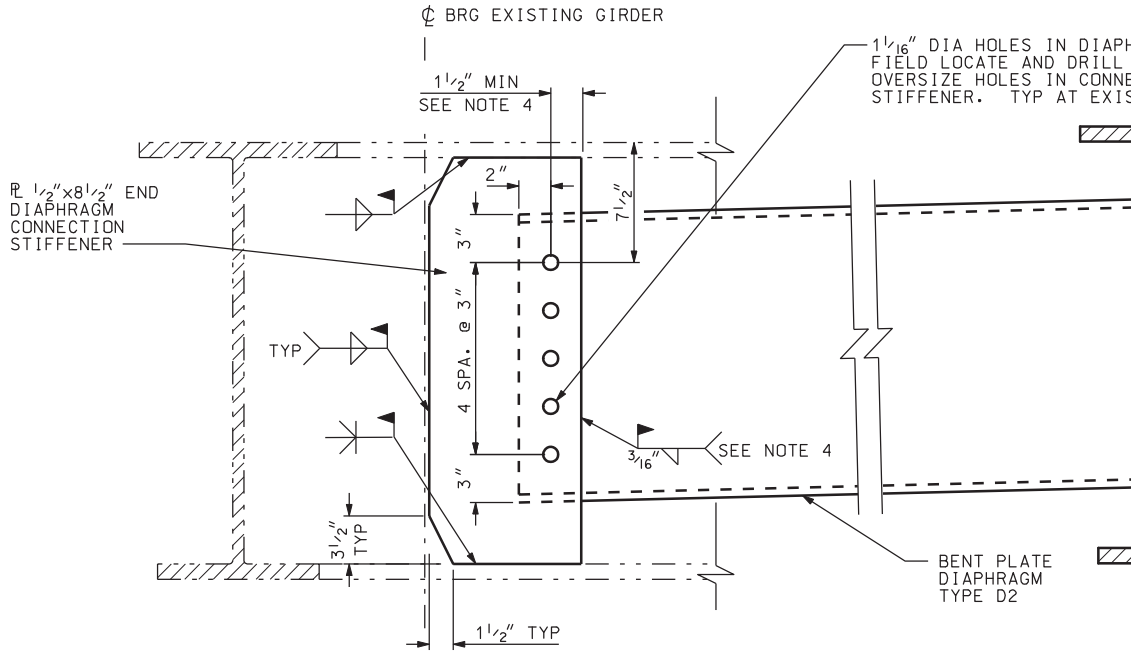


## SECTION A-A

DGN File: IP_PWPcdns1717\4433_C-346-15_STEEL02.dgn

02-MAY-2005

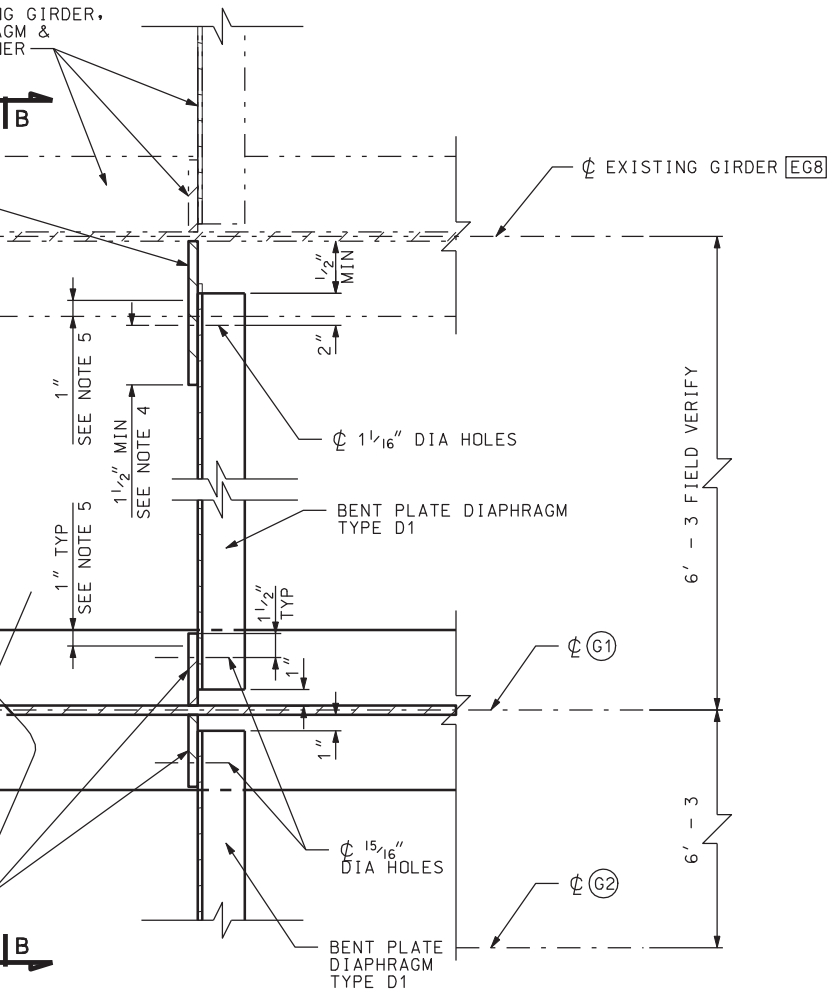


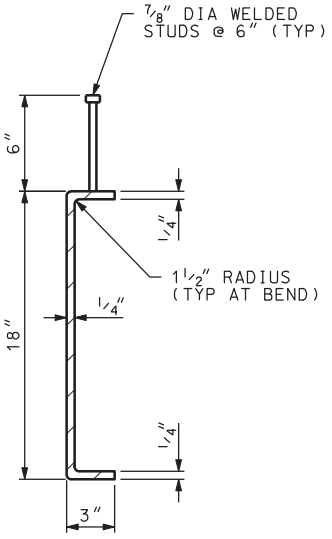


## BENT PLATE DIAPHRAGM DETAIL

NOTE: CONTRACTOR MAY SUBSTITUTE MC 18 x 42.7 FOR BENT PLATE SECTION AT NO ADDITIONAL COST TO THE DEPARTMENT

POSITE HAND)
M ARE

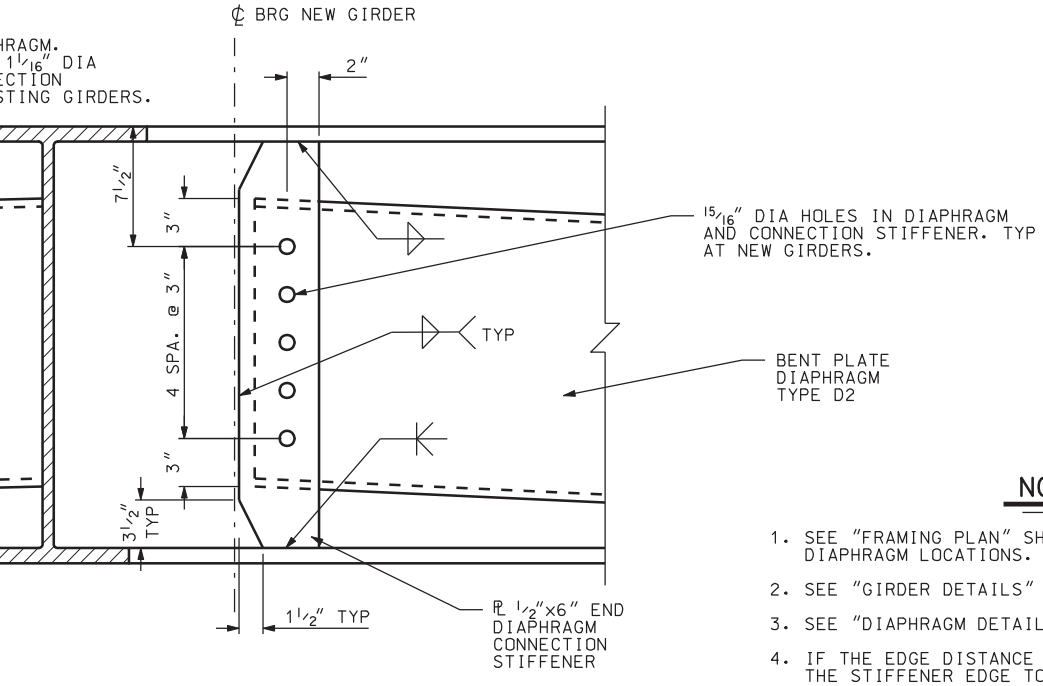


## NOTES

1. SEE "FRAMING PLAN" SHEET FOR INTERMEDIATE DIAPHRAGM LOCATIONS.
2. SEE "GIRDER DETAILS" SHEET FOR GENERAL NOTES.
3. SEE "DIAPHRAGM DETAILS 2" SHEET FOR SECTION B-B.
4. IF THE EDGE DISTANCE EXCEEDS 2", FIELD WELD THE STIFFENER EDGE TO THE DIAPHRAGM AFTER THE DECK SLAB CLOSURE POUR IS IN PLACE.
5. STOP FILLET WELDS CONNECTING STIFFENERS TO FLANGES 1" FROM EDGE OF FLANGE.
6. SEE "DIAPHRAGM DETAILS 2" FOR SECTION C-C.

| NO. | DATE | BY | REMARKS |
|---|---|---|---|

REVISIONS

UTAH DEPARTMENT OF TRANSPORTATION
SALT LAKE CITY, UTAH
STRUCTURES DIVISION

DESIGN JW 09/04 CHECK PBB 09/04
DRAWN JW 09/04 CHECK PBB 09/04
QUANT. CHECK

APPROVAL RECOMM. DATE SENIOR DESIGN ENGR.
APPROVED FOR USE BY UDOT DATE UDOT BRIDGE ENGR.

I-15; CORRIDOR IN UTAH COUNTY
100 EAST OVERPASS IN AMERICAN FORK
DIAPHRAGM DETAILS 1
PROJECT NUMBER SP-15-6(52)241

UTAH
COUNTY

C-346W
DRG. NO.

SHT. 15 OF 28

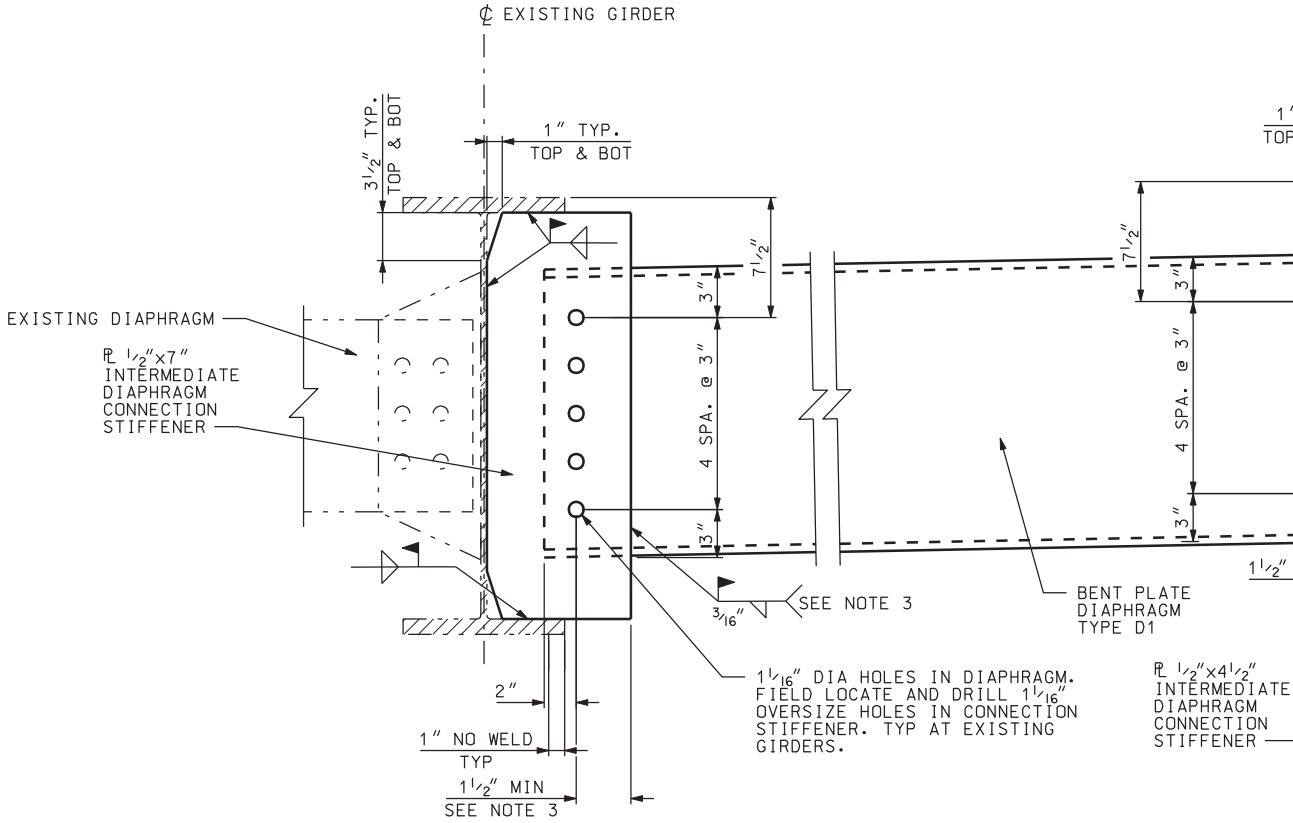


SECTION B-B

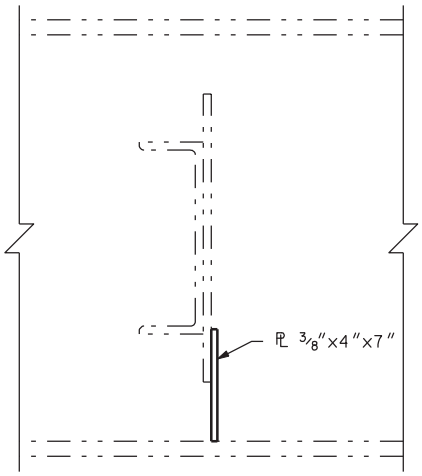


SECTION THRU CHANNEL

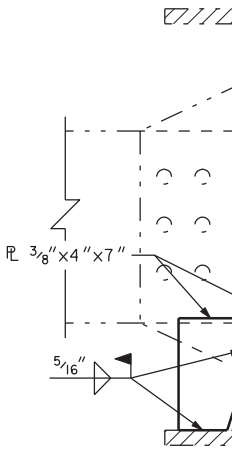


SECTI

RETROFIT BEARING STIFFENER DETAIL

DGN File:IP_PWPcdms1717\4433_C-346-16_STEEL03.dgn
02-MAY-2005

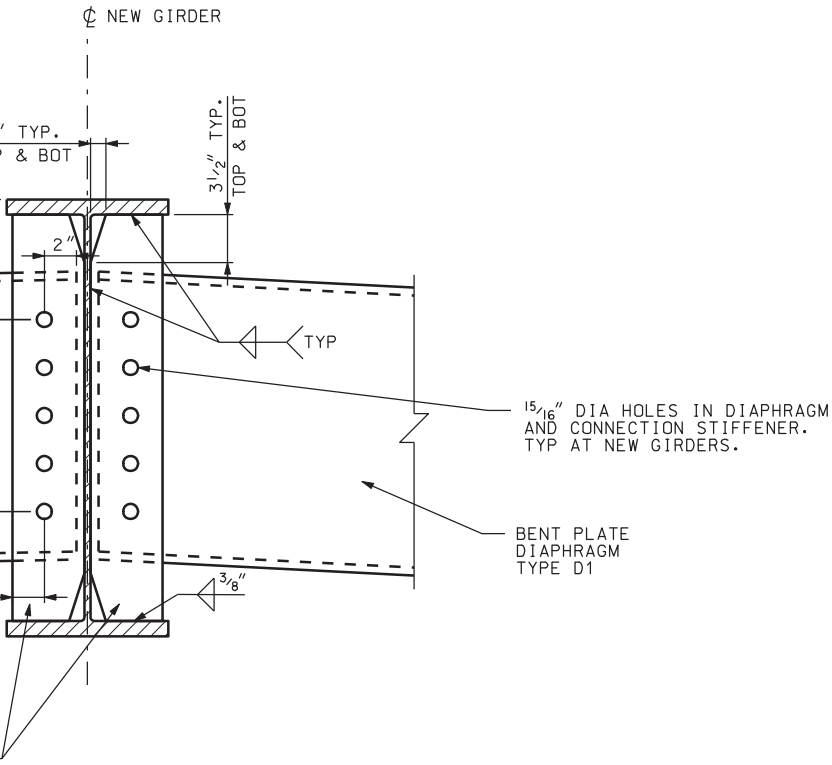


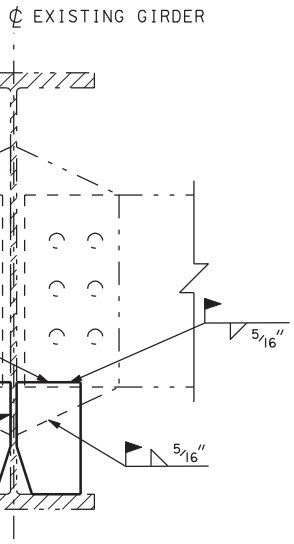


ON C-C

## NOTES

1. SEE "FRAMING PLAN" SHEET FOR INTERMEDIATE DIAPHRAGM LOCATIONS.
2. SEE "GIRDER DETAILS" SHEET FOR GENERAL NOTES.
3. IF THE EDGE DISTANCE EXCEEDS 2", FIELD WELD THE STIFFENER EDGE TO DIAPHRAGM AFTER THE DECK SLAB CLOSURE POUR IS IN PLACE.

| NO. | DATE | BY | REMARKS |
|---|---|---|---|
| | | | |

REVISIONS

UTAH DEPARTMENT OF TRANSPORTATION
SALT LAKE CITY, UTAH
STRUCTURES DIVISION

DESIGN JW 09/04 CHECK PBB 09/04
DRAWN JW 09/04 CHECK PBB 09/04
QUANT. CHECK

APPROVAL RECOMM. DATE SENIOR DESIGN ENGR.
APPROVED FOR USE BY UDOT DATE UDOT BRIDGE ENGR.

I-15; CORRIDOR IN UTAH COUNTY
100 EAST OVERPASS IN AMERICAN FORK
DIAPHRAGM DETAILS 2
PROJECT NUMBER SP-15-6(52)241

UTAH
COUNTY

C-346W
DRG. NO.

SHT. 16 OF 28

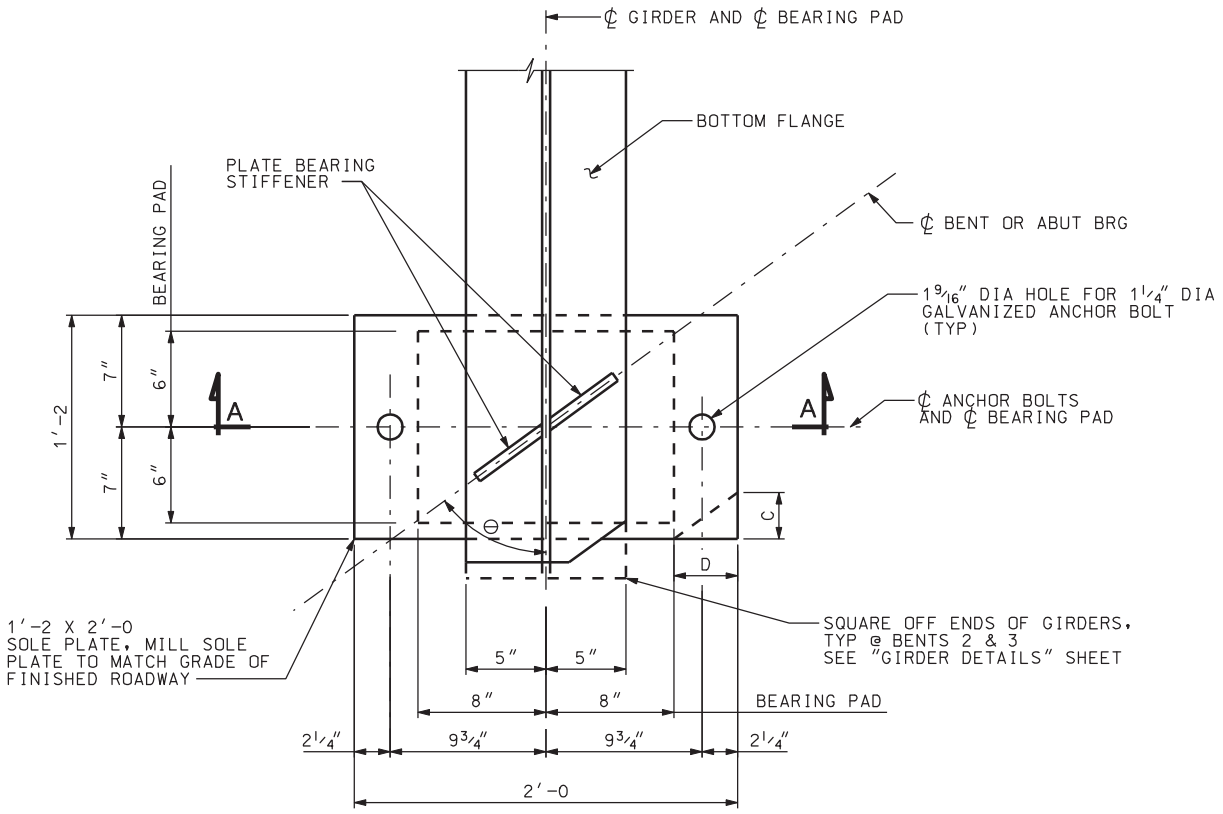


## PLAN

| BEARING DETAILS | | |
|---|---|---|
| | Θ | NO. BRG |
| ABUT 1 | 50°25′06″ | 4 |
| BENT 2 | 50°27′13″ | 8 |
| BENT 3 | 50°26′15″ | 8 |
| ABUT 4 | 50°18′20″ | 4 |

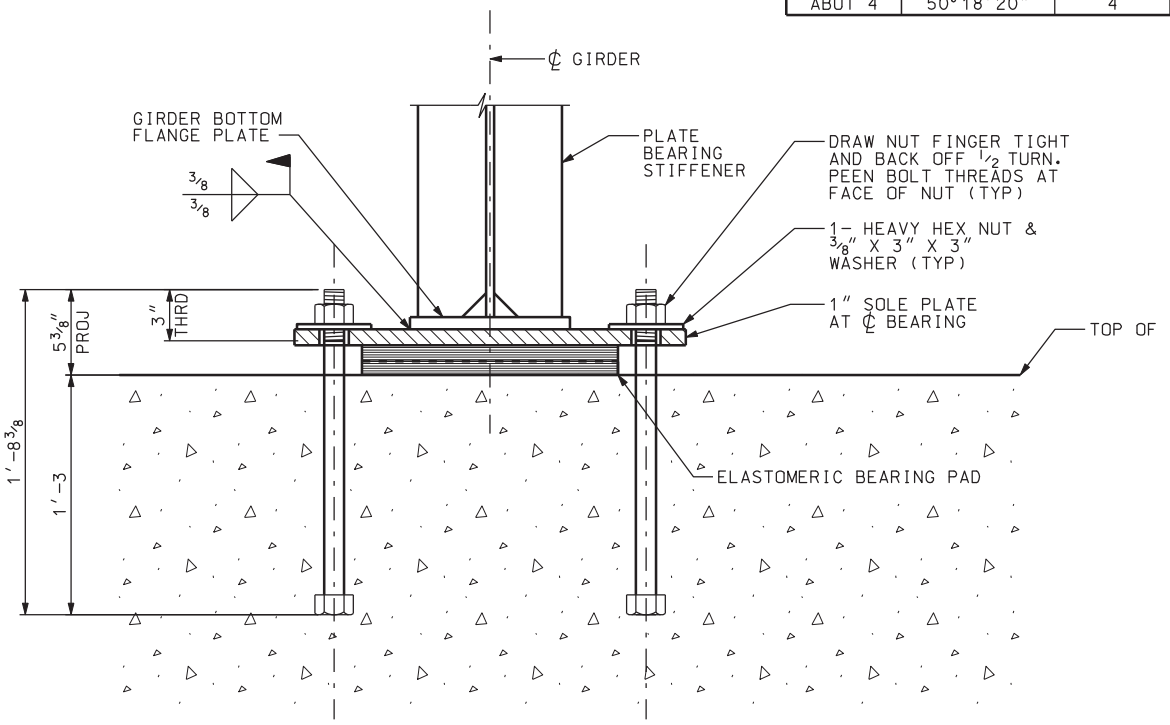


## SECTION A-A

DGN File:IP_PWPcdnsl717\4433_C-346-17_BRNG01.dgn

02-MAY-2005

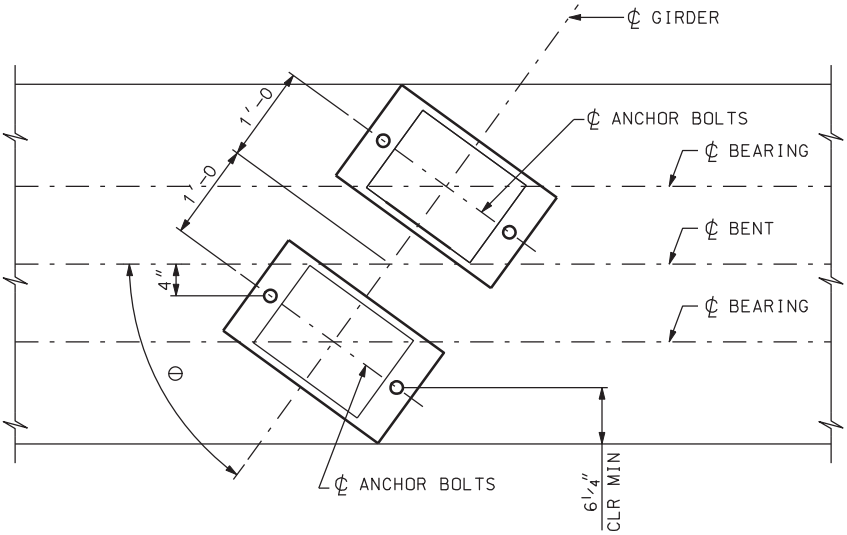


## ANCHOR BOLT LOCATION DIAGRAM (BENT)

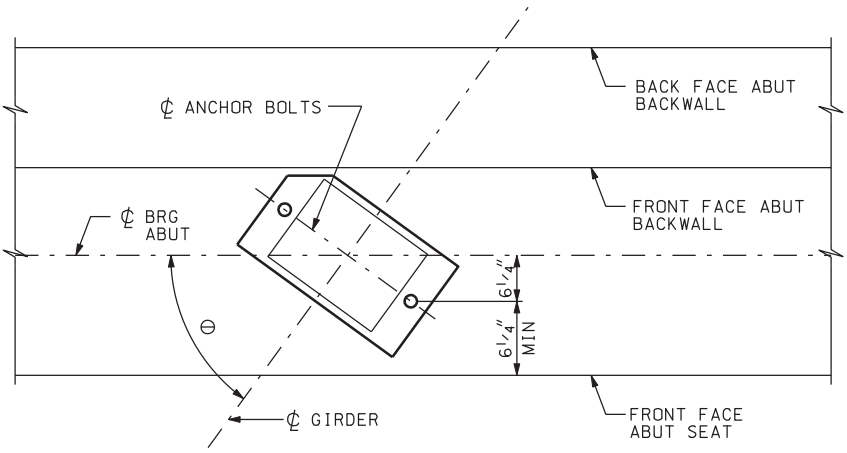


## ANCHOR BOLT LOCATION DIAGRAM (ABUTMENT)

| | |
|---|---|
| C | D |
| 4" | 4 3/4" |
| N/A | N/A |
| N/A | N/A |
| 4" | 4 3/4" |

BEARING SEAT

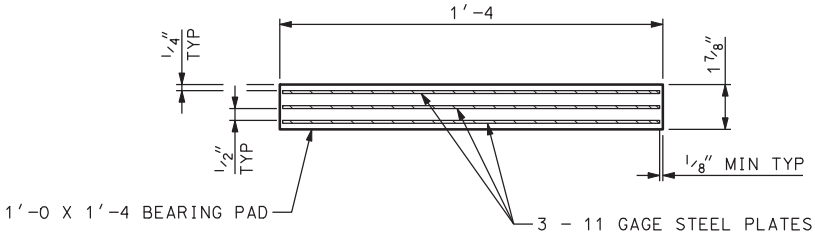


## BEARING PAD DETAIL

## NOTES

1. PAYMENT FOR ANCHOR BOLT AND BEARING ASSEMBLIES IS INCLUDED IN THE CONTRACT PRICE FOR STRUCTURAL STEEL.
2. ELASTOMER FOR BEARING PADS HARDNESS 50.
3. USE ASTM F-1554 GRADE 36 ANCHOR BOLTS.
4. GALVANIZE NUTS, WASHERS, AND ANCHOR BOLTS IN ACCORDANCE WITH AASHTO M232 (ASTM A153). ALL GALVANIZED STEEL THREADS ARE TO BE FREE FROM DEFECTS ALLOWING NUTS TO BE FREE RUNNING BY HAND FOR THE ENTIRE LENGTH OF THREADS.
5. FILL ANCHOR BOLT SOLE PLATE HOLES WITH SILICONE JOINT SEALER.
6. SOLE PLATES SHALL BE BEVELED TO MATCH GRADE OF FINISHED ROADWAY.

| NO. | DATE | BY | REMARKS |
|---|---|---|---|

REVISIONS

UTAH DEPARTMENT OF TRANSPORTATION
SALT LAKE CITY, UTAH
STRUCTURES DIVISION

DESIGN KMR 10/04 CHECK KTF 10/04
DRAWN RDF 10/04 CHECK KTF 10/04
QUANT. CHECK

APPROVAL RECOMM. DATE SENIOR DESIGN ENGR.
APPROVED FOR USE BY UDOT DATE UDOT BRIDGE ENGR.

I-15; CORRIDOR IN UTAH COUNTY
100 EAST OVERPASS IN AMERICAN FORK
BEARING DETAILS
PROJECT NUMBER SP-15-6(52)241

UTAH
COUNTY

C-346W
DRG. NO.

SHT. 17 OF 28

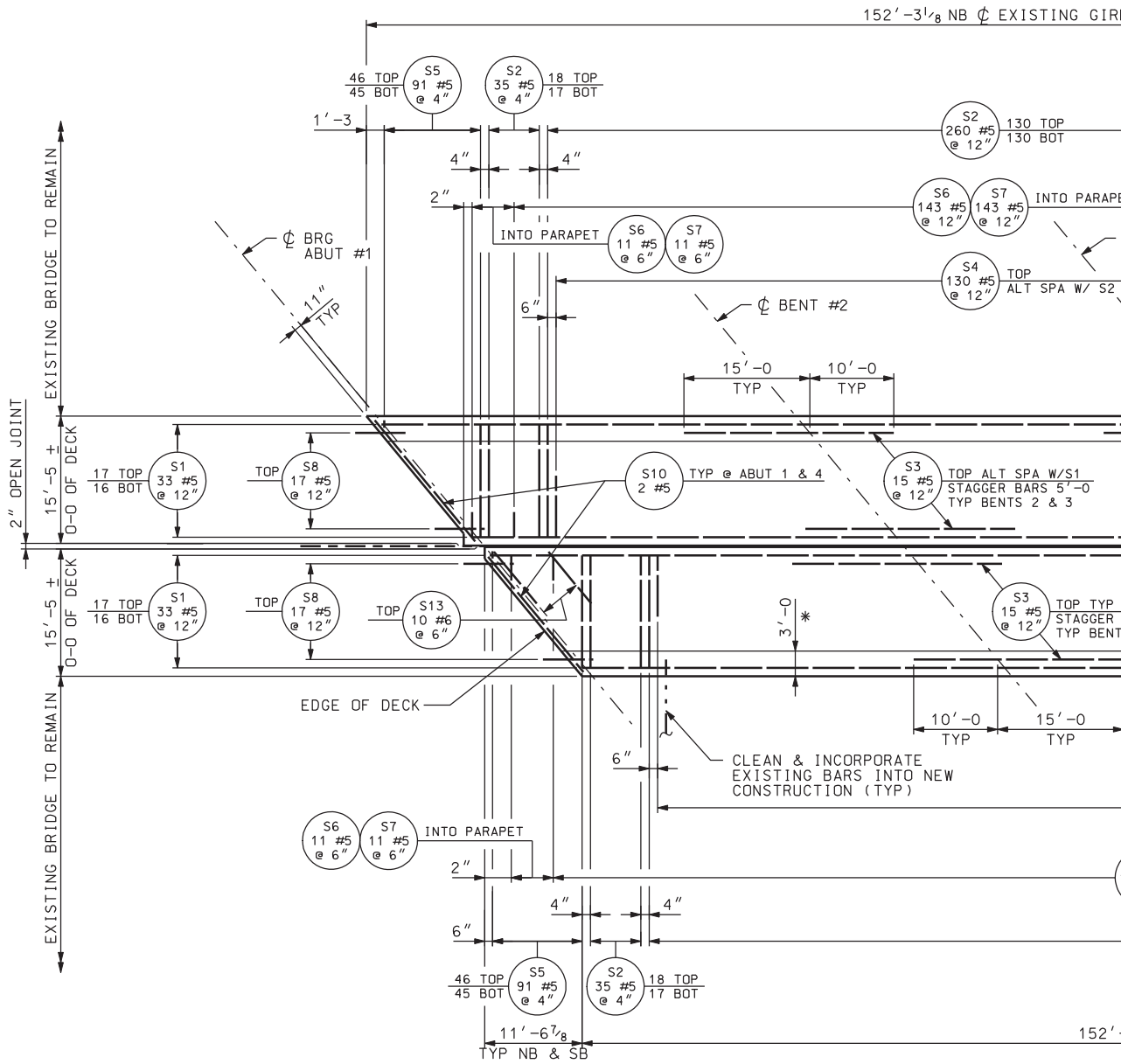


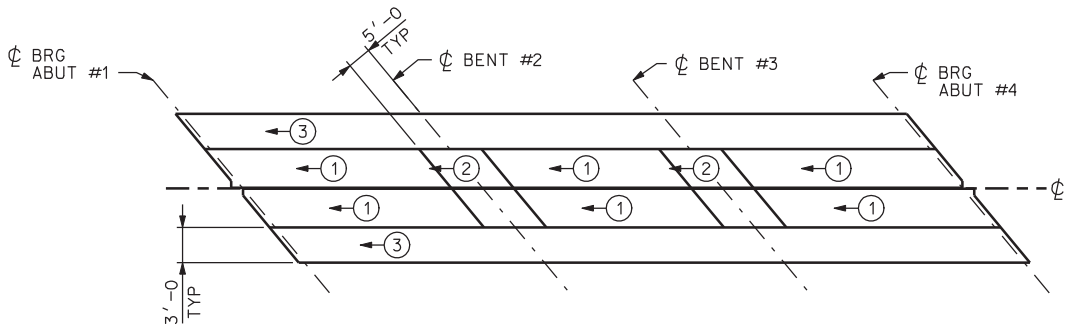


## POUR SEQUENCE

(2) → SEQUENCE NUMBER WITH DIRECTION OF POUR INDICATED

NOTE: PLACE DECK IN
INDICATED. CON
ALTERNATE PROC
COMBINING OF P
BY ENGINEER.

DGN File: IP_PWPcdms1717\4433_C-346-18_DCKSLB01.dgn

02-MAY-2005

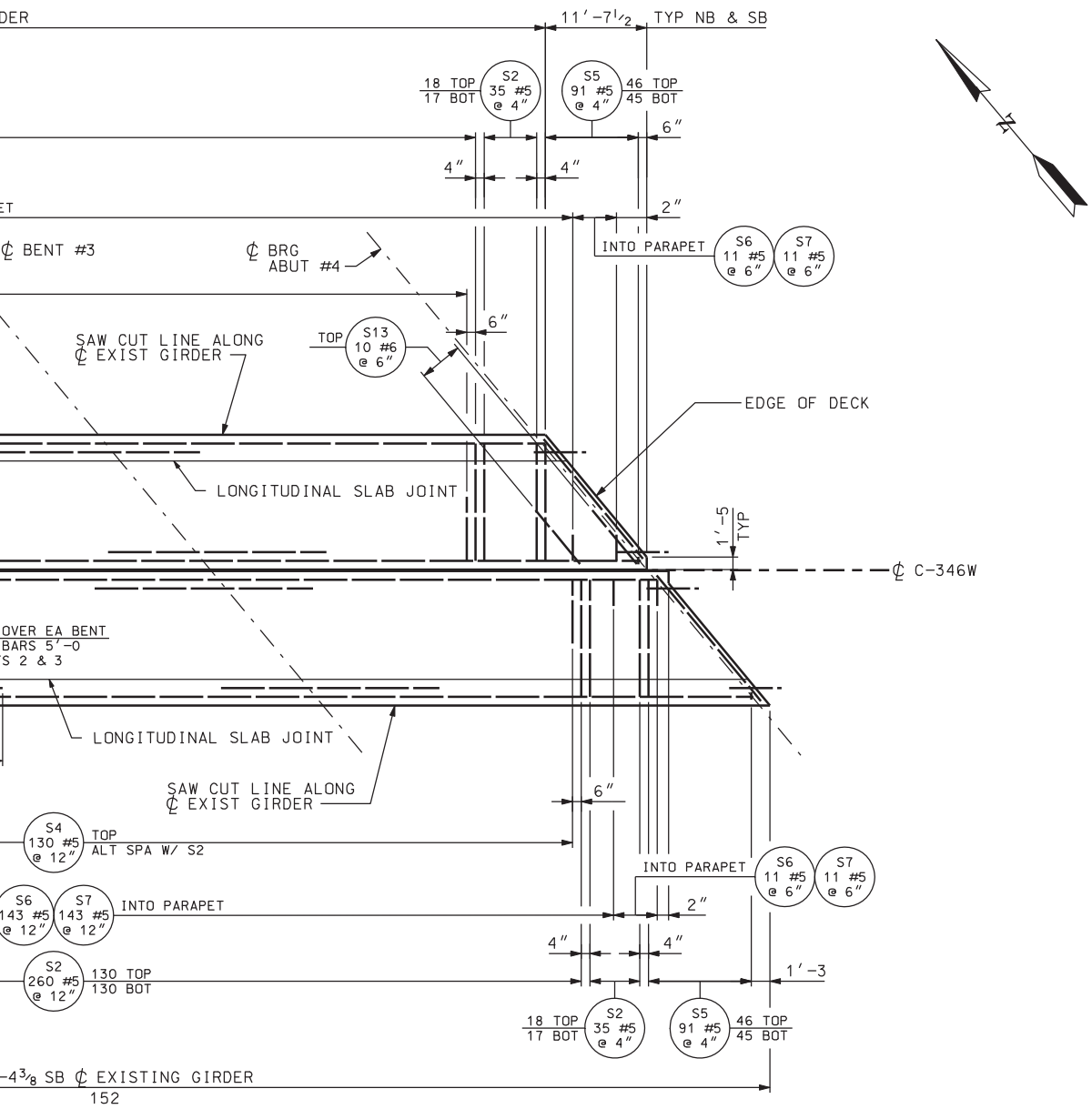


## PLAN

* CLOSURE POUR

C-346W

SECTIONS AND SEQUENCE
TRACTOR MAY SUBMIT
EDURES INCLUDING THE
OURS (1) AND (2) FOR APPROVAL

## NOTES

1. SEE "DECK SECTIONS" FOR ADDITIONAL REINFORCEMENT.
2. SEE "PARAPET DETAILS" FOR PARAPET REINFORCEMENT.
3. MINIMUM LAP LENGTH FOR (S1) BARS: #5 BAR 2′-6. STAGGER SPLICES SUCH THAT NO MORE THAN 50% OF (S1) BARS ARE SPLICED AT A GIVEN LOCATION (TAKEN NORMAL TO ℄ C-346W).
4. STAY-IN-PLACE FORMS ARE NOT PERMITTED.

| QUANTITIES STRUCTURAL CONCRETE | |
|---|---|
| DECK NB & SB | 127.5 CY |

| NO. | DATE | BY | REMARKS |
|---|---|---|---|
| | | | |

REVISIONS

UTAH DEPARTMENT OF TRANSPORTATION
SALT LAKE CITY, UTAH
STRUCTURES DIVISION

DESIGN KMR 10/04 CHECK KTF 10/04
DRAWN RDF 10/04 CHECK KTF 10/04
QUANT. KTF 10/04 CHECK KMR 10/04

APPROVAL RECOMM. DATE SENIOR DESIGN ENGR.
APPROVED FOR USE BY UDOT DATE UDOT BRIDGE ENGR.

I-15; CORRIDOR IN UTAH COUNTY
100 EAST OVERPASS IN AMERICAN FORK
DECK SLAB PLAN
PROJECT NUMBER SP-15-6(52)241

UTAH
COUNTY

C-346W
DRG. NO.

SHT. 18 OF 28

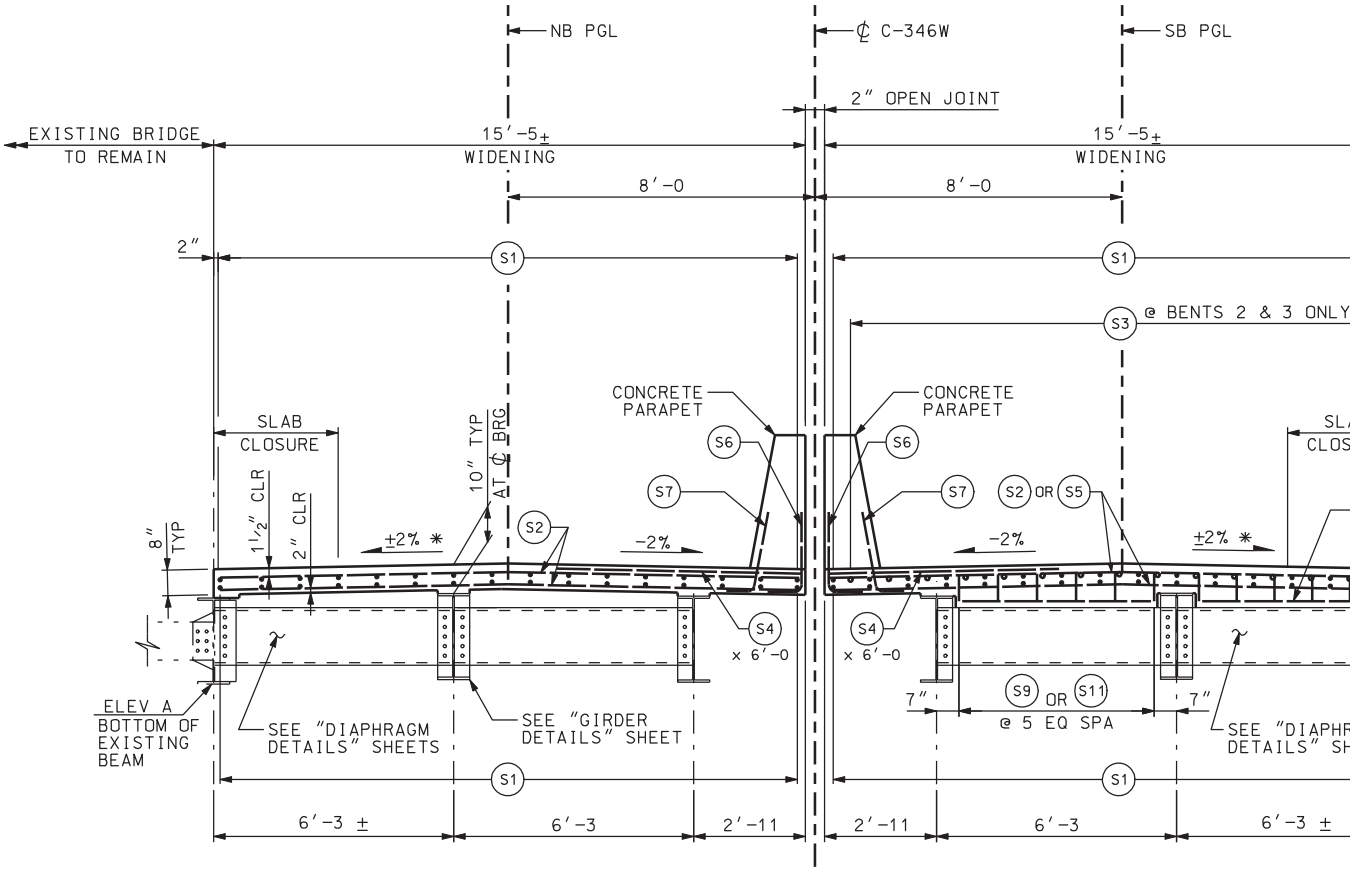


## TYPICAL CROSS SECTION

* VERIFY EXISTING CROSS SLOPE

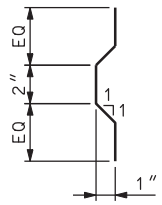


## KEY DETAIL

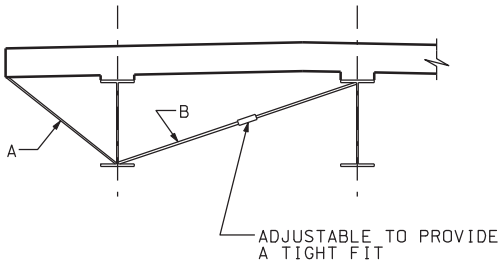


BRACE DECK OVERHANGS DURING PLACEMENT OF DECK AS SHOWN. ENSURE THAT MEMBER "B" IS CAPABLE OF DEVELOPING THE FORCES INDUCED BY MEMBER "A". SHOP DRAWINGS ARE REQUIRED.

## SECTION AT SLAB OVERHANG

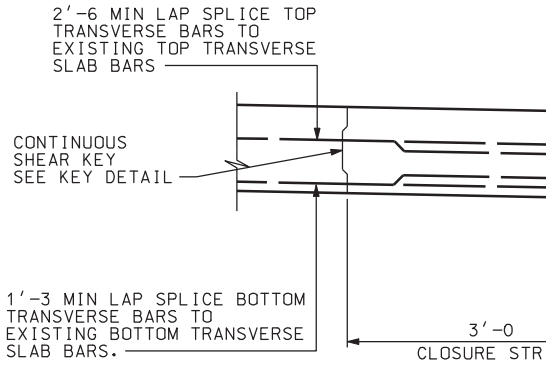


## SLAB C

DGN File:IP_PWPcdns1717\4433_C-346-19_DECK01.dgn

02-MAY-2005

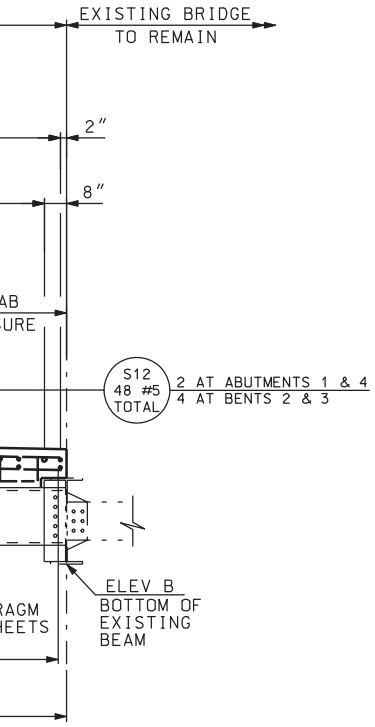


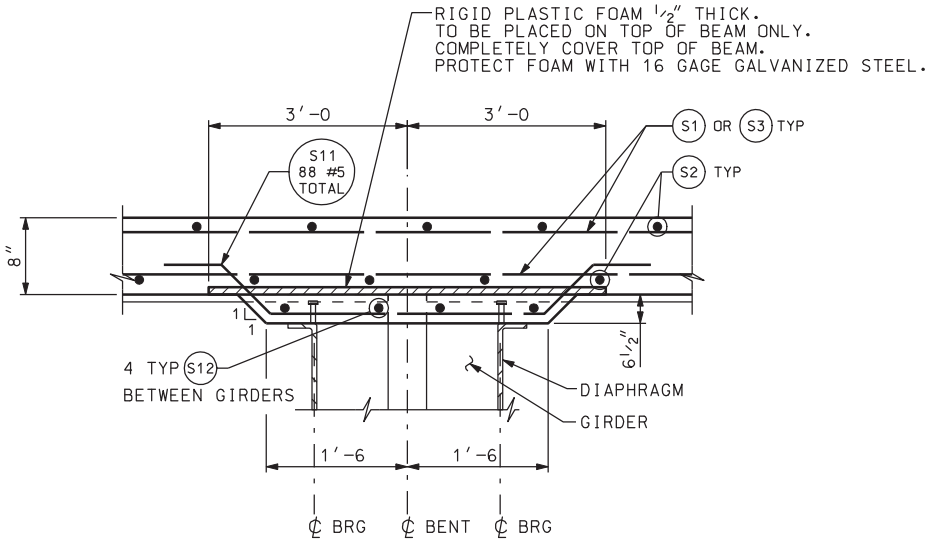


## CONTINUOUS BEARING

BENTS 2 & 3

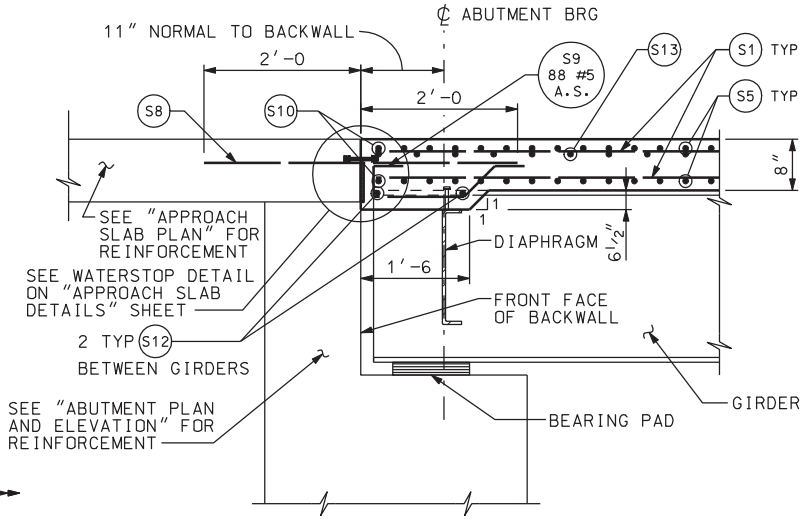


## SECTION THRU END DIAPHRAGM

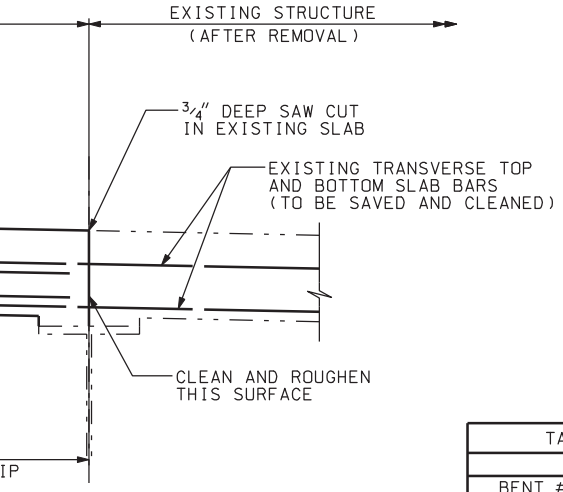


## CLOSURE

| TABULATED ELEVATIONS | | |
|---|---|---|
| | ELEV A | ELEV B |
| BENT #2N | 4525.32 | 4525.20 |
| BENT #2S | 4525.30 | 4525.21 |

FIELD VERIFY THE EXISTING BOTTOM OF BEAM ELEVATIONS ADJACENT TO THE WIDENED PORTIONS OF THE STRUCTURE. CONTACT THE ENGINEER IF THE DISCREPANCY BETWEEN THE SURVEYED AND DETAILED ELEVATIONS EXCEEDS 1″. THE ELEVATIONS SHOWN ARE BASED ON SURVEYED ELEVATIONS AT THE NORTH (N) OR SOUTH (S) FACE OF THE BENT CAP.

REVISIONS

| NO. | DATE | BY | REMARKS |
|---|---|---|---|
| | | | |

UTAH DEPARTMENT OF TRANSPORTATION
SALT LAKE CITY, UTAH
STRUCTURES DIVISION

DESIGN KMR 10/04 CHECK KTF 10/04
DRAWN RDF 10/04 CHECK KTF 10/04
QUANT. CHECK

APPROVAL RECOMM. DATE SENIOR DESIGN ENGR.
APPROVED FOR USE BY UDOT DATE UDOT BRIDGE ENGR.

I-15; CORRIDOR IN UTAH COUNTY
100 EAST OVERPASS IN AMERICAN FORK
DECK SECTIONS
PROJECT NUMBER SP-15-6(52)241

UTAH
COUNTY

C-346W
DRG. NO.

SHT. 19 OF 28

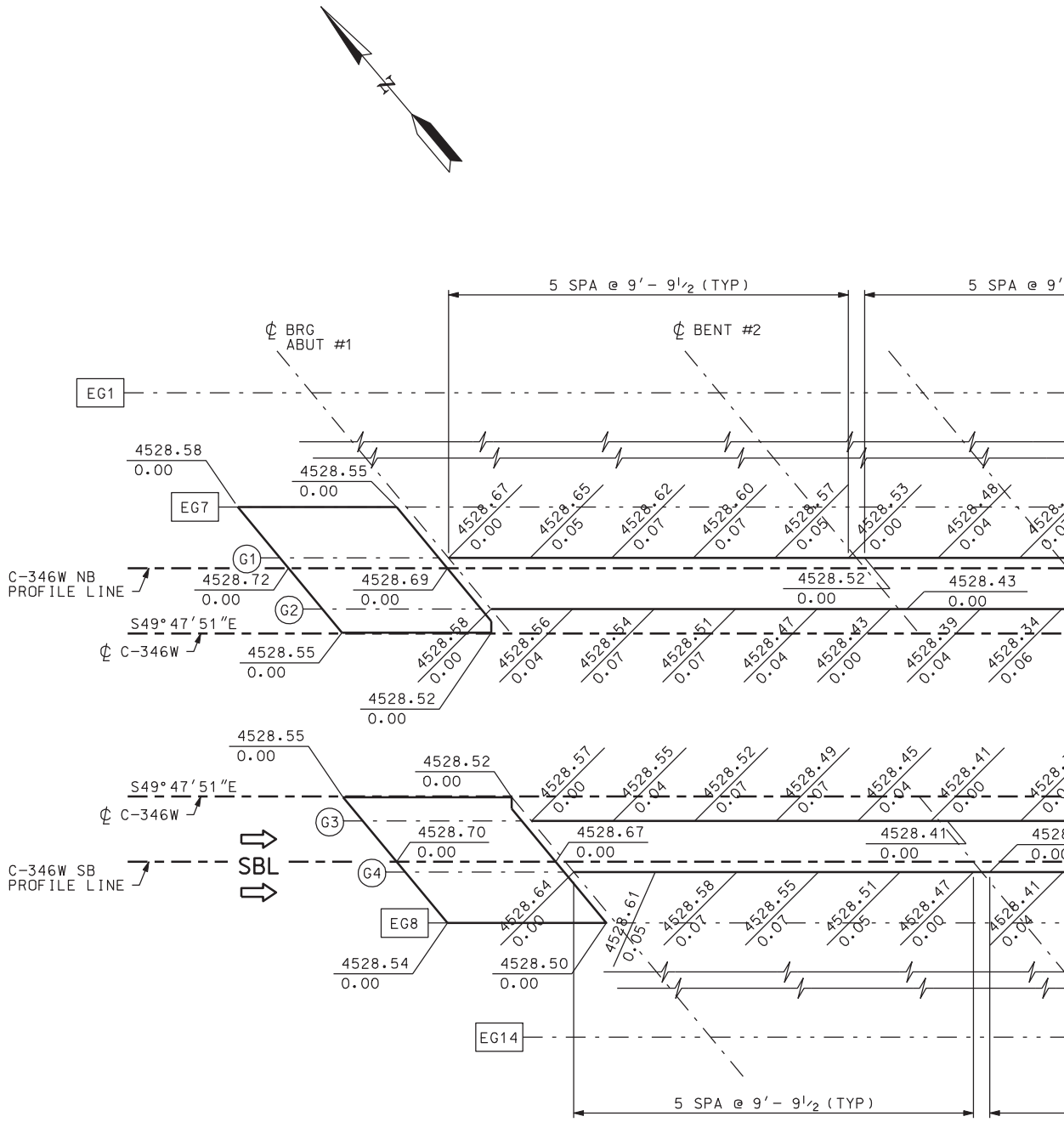


## SCREED E

## NOT

1. FIGURES ABOVE THE LINES A
   AT THE TOP OF CONCRETE BE
   FIGURES BELOW THE LINES A
   ADD THE DEFLECTIONS TO TH
   TO OBTAIN SCREED ELEVATIO
2. ALL DIMENSIONS ARE ALONG
3. VERIFY THE FINISHED GRADE
   OF THE EXISTING STRUCTURE
4. ℄ C-346W IS SHOWN SEPARAT
   SOUTHBOUND STRUCTURES TO
5. COORDINATE APPROACH SLAB

DGN File:IP_PWPcdms1717\4433_C-346-20_SCREED01.dgn
02-MAY-2005

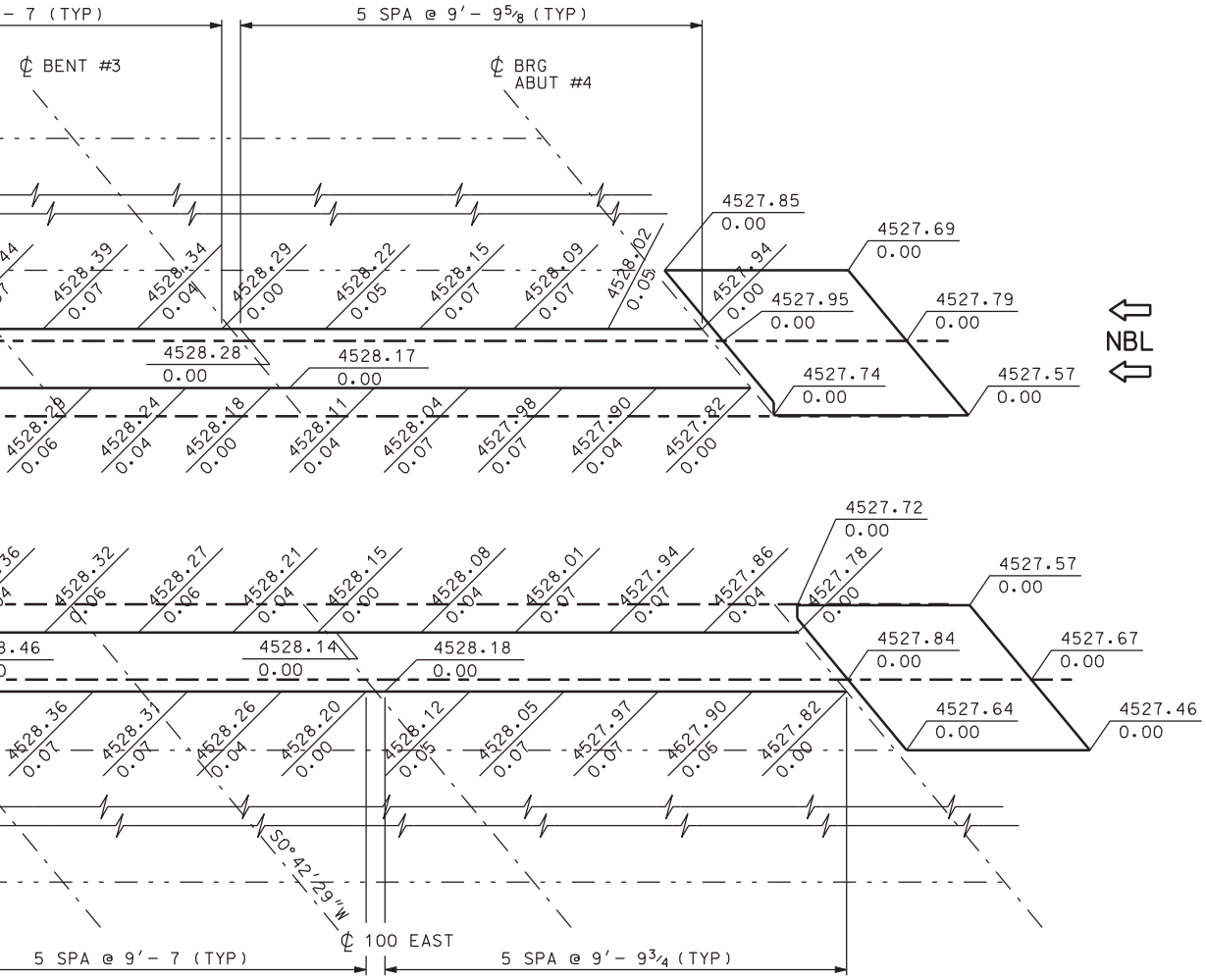


## LEVATIONS

## TES

RE FINISHED GRADE ELEVATIONS
FORE THE OVERLAY IS APPLIED.
RE DEAD LOAD DEFLECTIONS (FT).
E FINISHED GRADE ELEVATIONS
NS.

℄ GIRDER.

ELEVATIONS TO MATCH THE CROSS-SLOPE
.

ED FOR THE NORTHBOUND AND
FACILITATE PRESENTATION OF DATA.

ELEVATIONS WITH ROADWAY GRADING.

| NO. | DATE | BY | REMARKS |
|---|---|---|---|
| | | | |

REVISIONS

UTAH DEPARTMENT OF TRANSPORTATION
SALT LAKE CITY, UTAH
STRUCTURES DIVISION

DESIGN JAR 10/04 CHECK KMR 10/04
DRAWN JAR 10/04 CHECK KMR 10/04
QUANT. CHECK

APPROVAL RECOMM. DATE SENIOR DESIGN ENGR.
APPROVED FOR USE BY UDOT DATE UDOT BRIDGE ENGR.

I-15; CORRIDOR IN UTAH COUNTY
100 EAST OVERPASS IN AMERICAN FORK
SCREED ELEVATIONS
PROJECT NUMBER SP-15-6(52)241

UTAH
COUNTY

C-346W
DRG. NO.

SHT. 20 OF 28

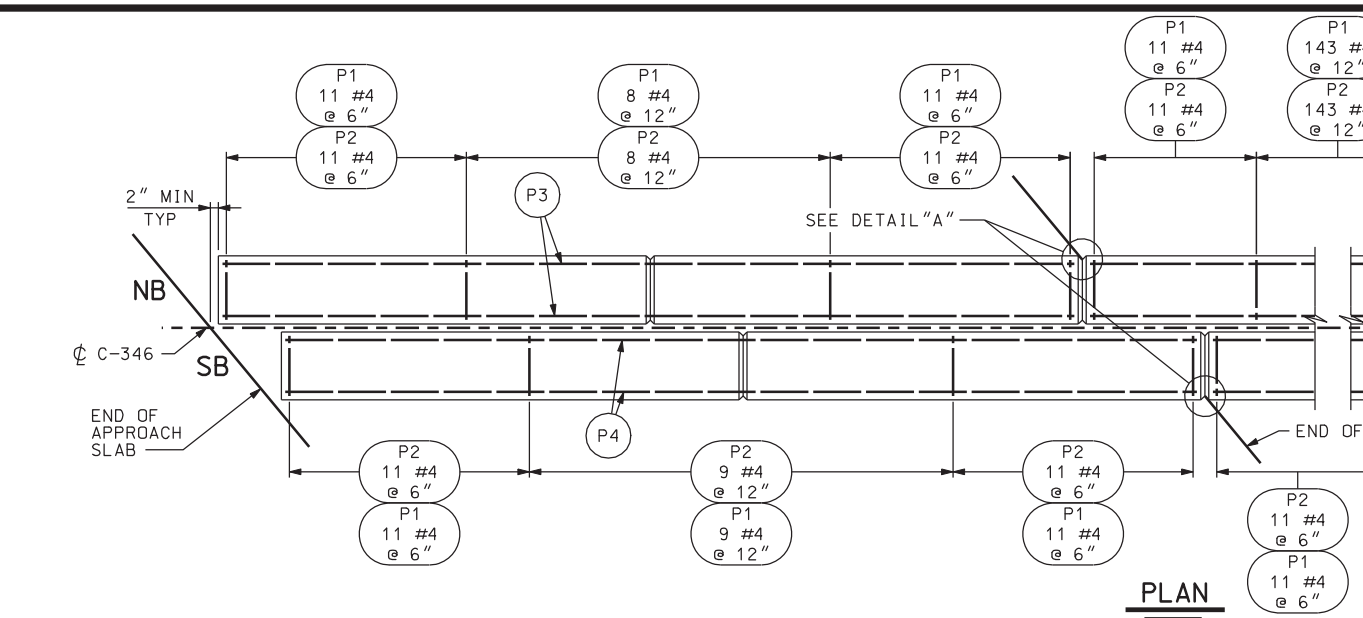


## PLAN

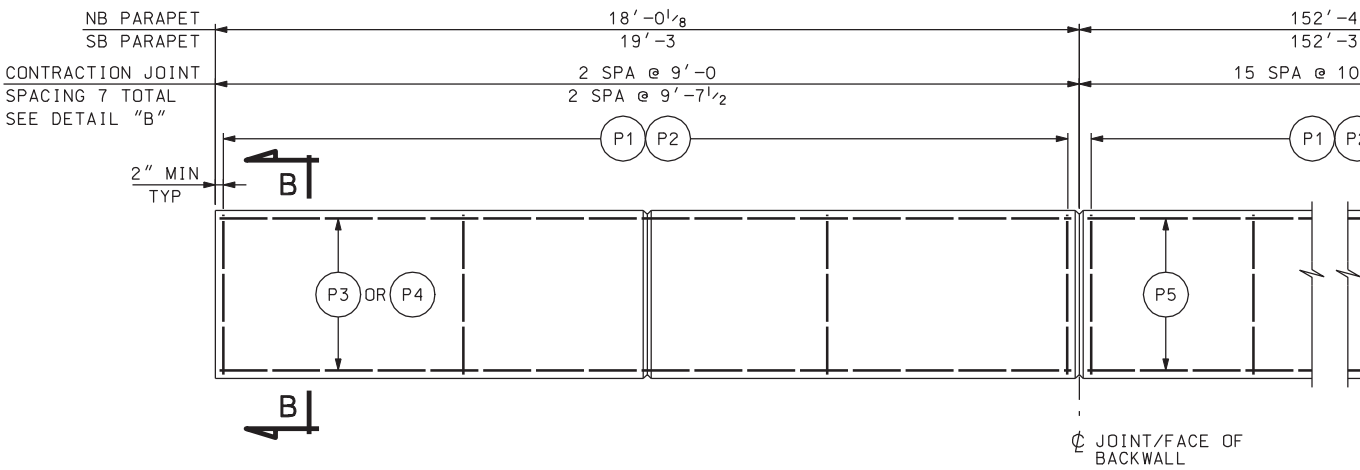


## ELEV

ALL DIMENSIONS SHOWN

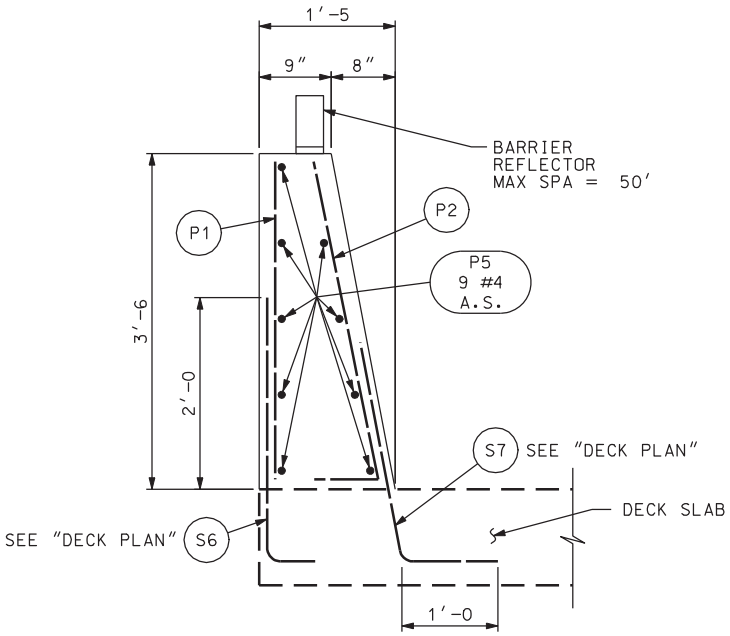


## SECTION A-A

NB PARAPET SHOWN, SB SIMILAR

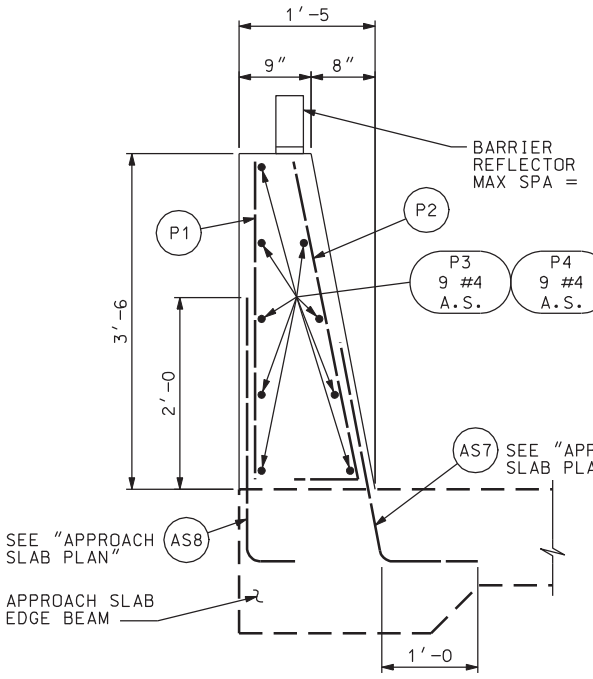


## SECTION B-B

NB PARAPET SHOWN, SB SIMILAR

DGN File:IP_PWPcdns1717\4433_C-346-21-PARA01.dgn
02-MAY-2005

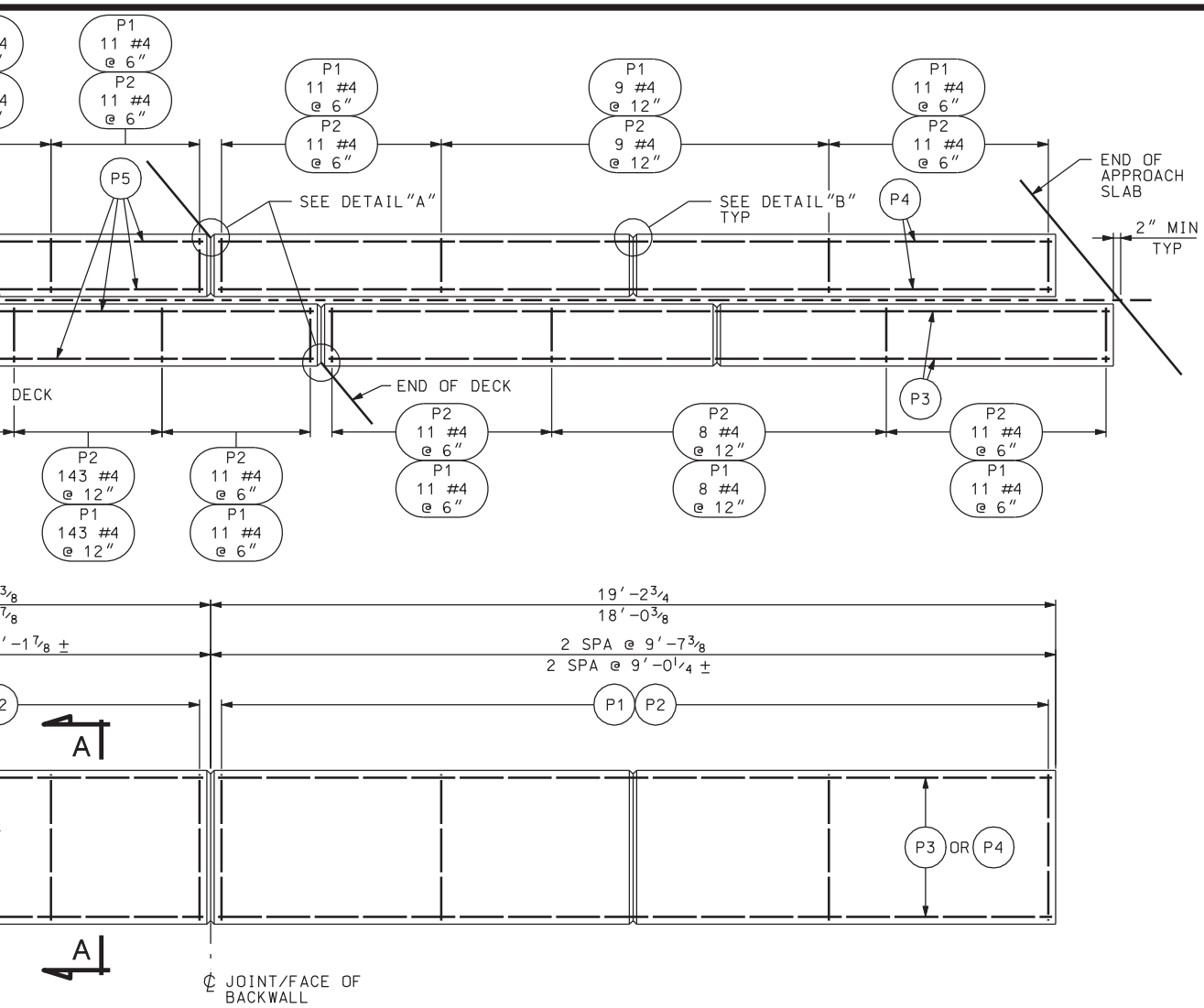


ATION

ARE ALONG EDGE OF DECK

50'

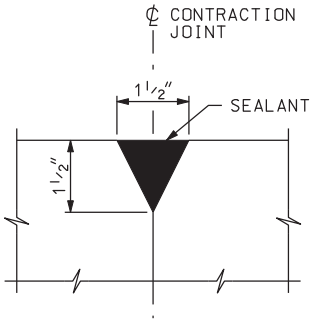


## DETAIL "B"

CONTRACTION JOINT

PROACH
AN"

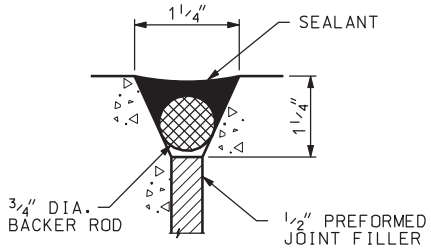


## DETAIL "A"

AT END OF BRIDGE DECK

## NOTES

1. ALTERNATE ALL REINFORCING STEEL SPLICES.
2. PROVIDE 2" MIN. COVER TO REINFORCING STEEL UNLESS NOTED OTHERWISE.
3. PLACE CONTRACTION JOINT ON SIDES AND TOP OF PARAPET.
4. EXTEND SEALANT AND FOAM BACKER ROD FROM DECK TO TOP OF PARAPET ON THE INSIDE PARAPET FACE AND ACROSS TOP OF PARAPET.
5. FOR END DETAILS OF PARAPET, SEE "PARAPET END DETAILS" SHEET.
6. ADJUST BAR SPACING AS REQUIRED TO NOT EXCEED MAXIMUM SPACING SHOWN.

| QUANTITIES STRUCTURAL CONCRETE | |
|---|---|
| NB & SB PARAPETS | 53.3 CY |

| NO. | DATE | BY | REMARKS |
|---|---|---|---|
| | | | |

REVISIONS

UTAH DEPARTMENT OF TRANSPORTATION
SALT LAKE CITY, UTAH
STRUCTURES DIVISION

DESIGN KMR 10/04 CHECK KTF 10/04
DRAWN RDF 10/04 CHECK KTF 10/04
QUANT. KTF 10/04 CHECK KMR 10/04

APPROVAL RECOMM. DATE SENIOR DESIGN ENGR.
APPROVED FOR USE BY UDOT DATE UDOT BRIDGE ENGR.

I-15; CORRIDOR IN UTAH COUNTY
100 EAST OVERPASS IN AMERICAN FORK
PARAPET DETAILS

PROJECT NUMBER SP-15-6(52)241

UTAH COUNTY

C-346W DRG. NO.

SHT. 21 OF 28

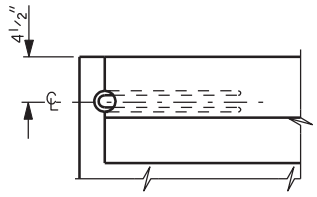


PLAN

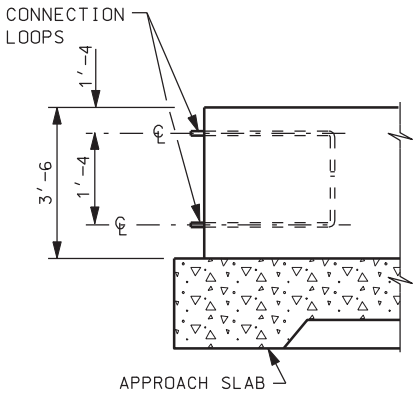


ELEVATION

STANDARD END DETAILS

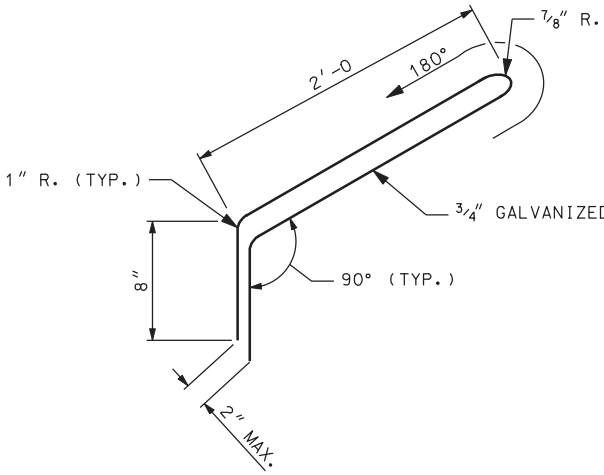


CONNECTION LOOP DETAIL

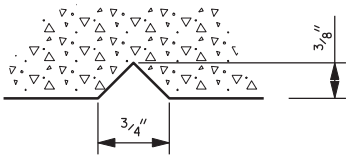


TYPICAL SECTION

THRU STRUCTURE NUMBER

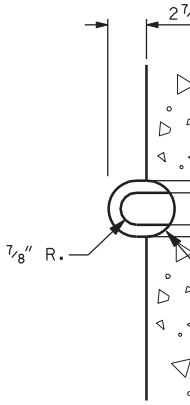


CON

DGN File:IP_PWPcdms1717\4433_C-346-22_PAREND01.dgn
02-MAY-2005

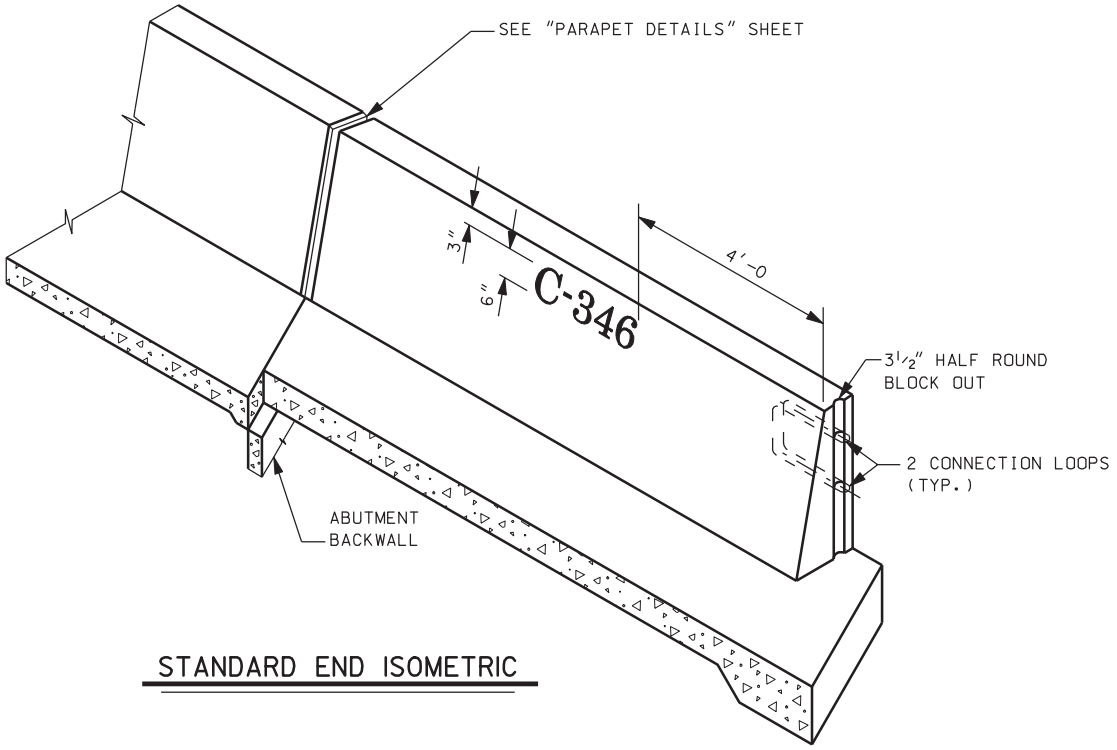


STANDARD END ISOMETRIC

D STEEL BAR

8"

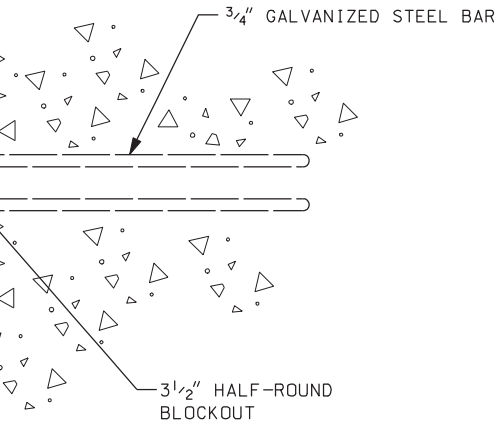


NECTION BAR END DETAIL

## NOTES

1. INSTALL CONNECTION LOOPS AT ALL PARAPET ENDS.
2. CONNECTION LOOPS NOT INCLUDED IN REINFORCING STEEL SCHEDULE.
3. SEE ROADWAY DRAWING DT-08 FOR TRANSITION FROM PARAPET TO PRECAST BARRIER.

| NO. | DATE | BY | REMARKS |
|---|---|---|---|

REVISIONS

UTAH DEPARTMENT OF TRANSPORTATION
SALT LAKE CITY, UTAH
STRUCTURES DIVISION

DESIGN PBB 10/04 CHECK KMR 10/04
DRAWN RDF 10/04 CHECK KMR 10/04
QUANT. CHECK

APPROVAL RECOMM. DATE SENIOR DESIGN ENGR.
APPROVED FOR USE BY UDOT DATE UDOT BRIDGE ENGR.

I-15; CORRIDOR IN UTAH COUNTY
100 EAST OVERPASS IN AMERICAN FORK
PARAPET END DETAILS
PROJECT NUMBER SP-15-6(52)241

UTAH
COUNTY

C-346W
DRG. NO.

SHT. 22 OF 28

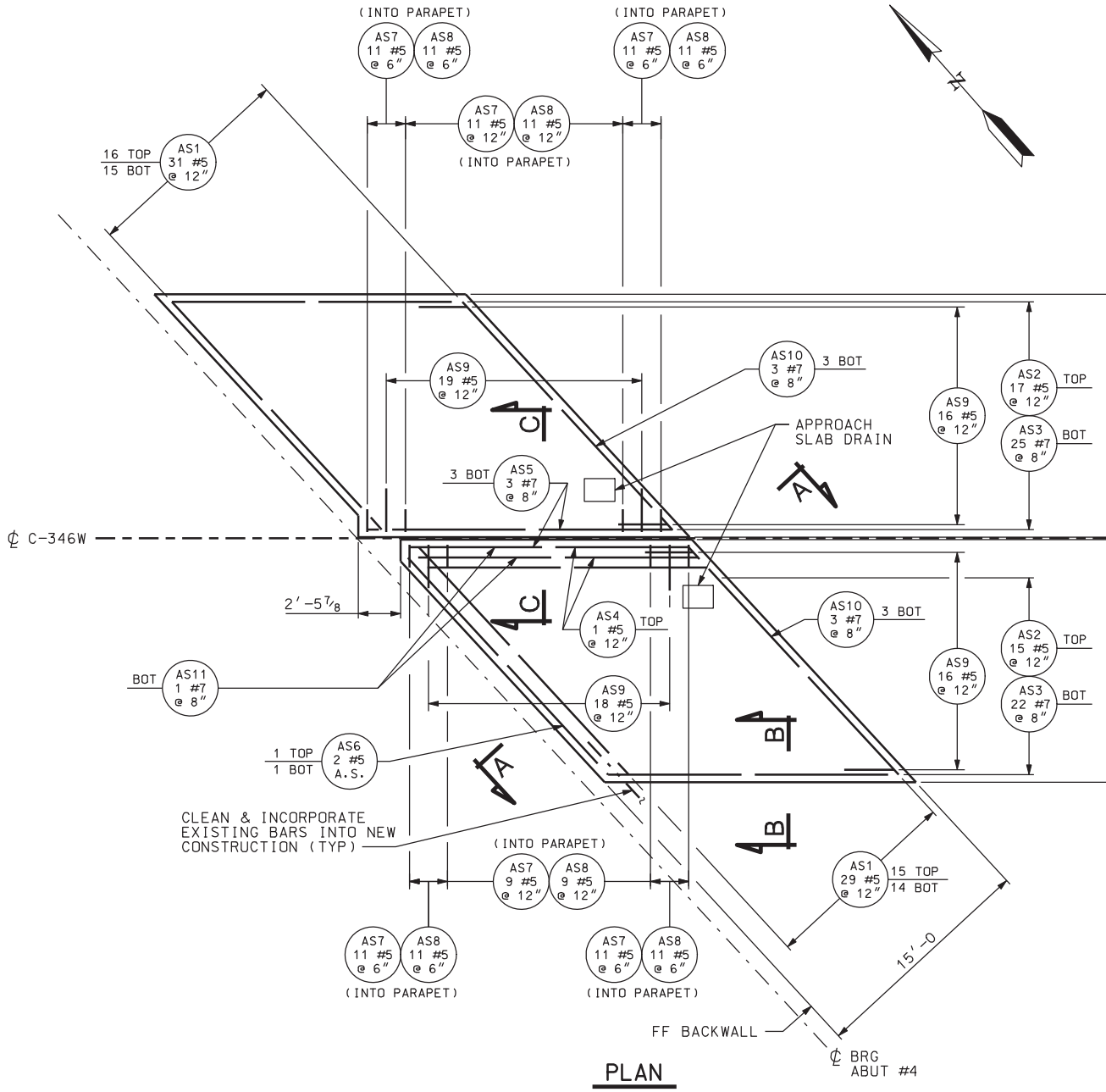


## PLAN

ABUT #4 APPROACH SLAB SHOWN, ABUT #1 SIMILAR

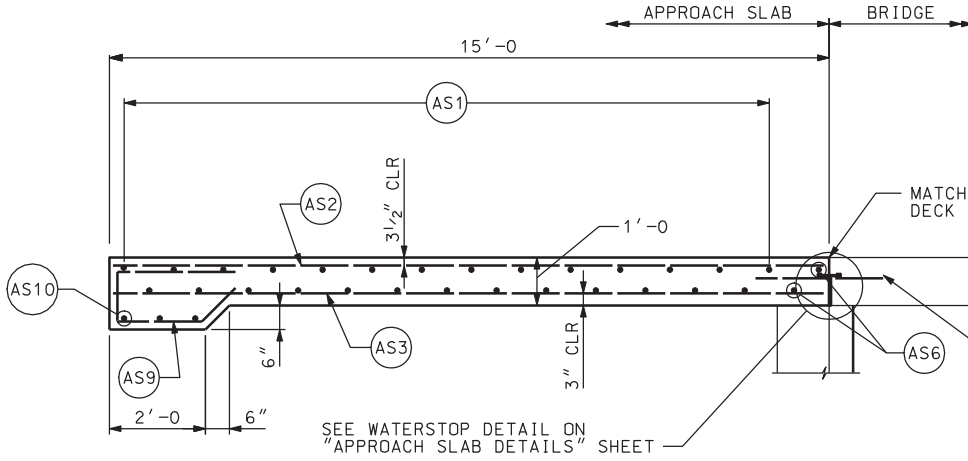


## SECTION A-A

DGN File: IP_PWPcdms1717\4433_C-346-23_APPSLB01.dgn

02-MAY-2005

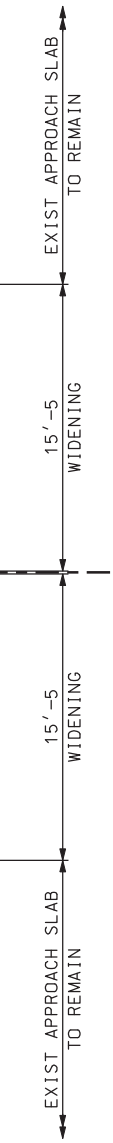


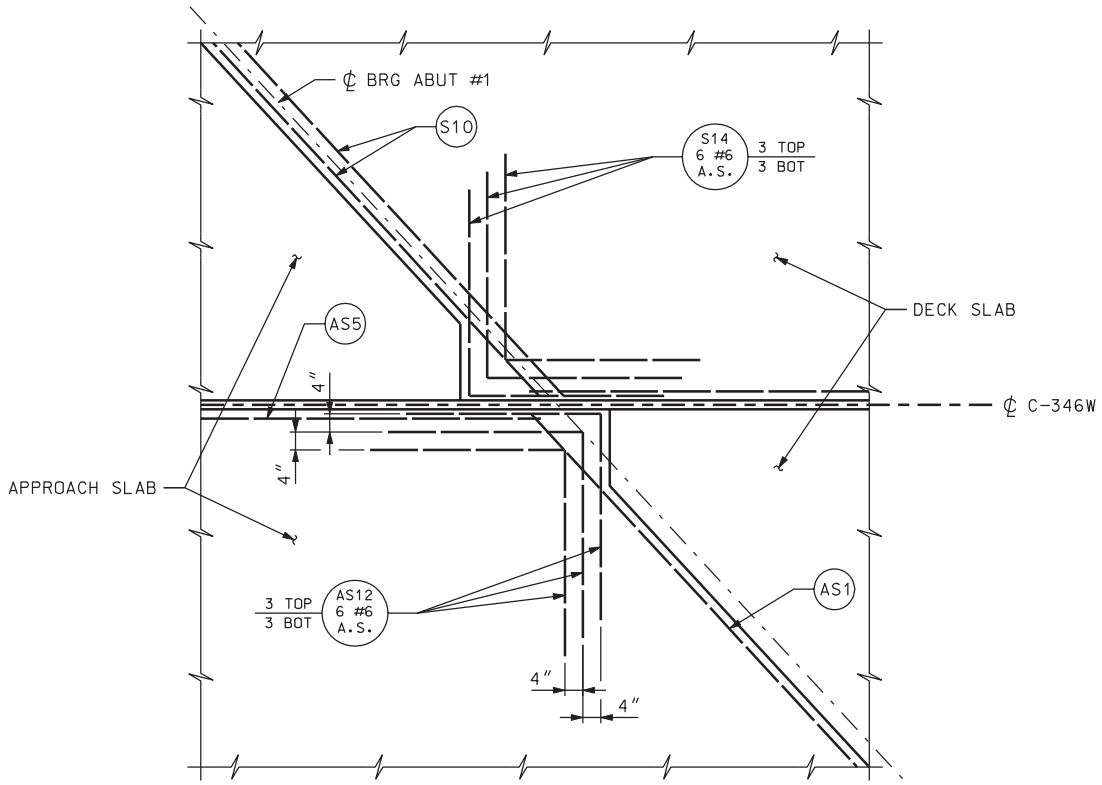


## CORNER REINFORCING DETAIL

ABUT #1 IS SHOWN, ABUT #4 IS SIMILAR
SEE "DECK SLAB PLAN" SHEET AND APPROACH
SLAB PLAN FOR REINFORCING NOT SHOWN FOR CLARITY

BRIDGE ELEVATION

S8 SEE "DECK SLAB PLAN" SHEET

| APPROACH SLAB DRAIN LOCATIONS | |
|---|---|
| STATION | OFFSET |
| 1602+83.67 | 2.67' LT |
| 1602+88.67 | 2.67' RT |

## NOTES

1. SEE "APPROACH SLAB DETAILS" SHEET FOR SECTIONS B-B AND C-C.
2. FOR APPROACH SLAB ELEVATIONS, SEE "SCREED ELEVATIONS" SHEET.
3. APPROACH SLAB DRAIN LOCATIONS SHOWN ARE AT CENTER OF DRAIN GRATE. SEE "APPROACH SLAB DRAIN DETAILS".
4. STAGGER (AS1) BARS SUCH THAT THE TOP BARS ARE OFFSET 6" FROM BOTTOM BARS.
5. APPROACH SLAB DRAIN LOCATIONS INDICATED ARE TO THE CENTER OF THE GRATE.

| QUANTITIES STRUCTURAL CONCRETE | |
|---|---|
| APPROACH NB & SB | 52.3 CY |

| NO. | DATE | BY | REMARKS |
|---|---|---|---|
| | | | |

REVISIONS

UTAH DEPARTMENT OF TRANSPORTATION
SALT LAKE CITY, UTAH
STRUCTURES DIVISION

DESIGN KMR 10/04 CHECK KTF 10/04
DRAWN RDF 10/04 CHECK KTF 10/04
QUANT. KMR 10/04 CHECK KTF 10/04

APPROVAL RECOMM. DATE SENIOR DESIGN ENGR.
APPROVED FOR USE BY UDOT DATE UDOT BRIDGE ENGR.

I-15; CORRIDOR IN UTAH COUNTY
100 EAST OVERPASS IN AMERICAN FORK
APPROACH SLAB PLAN
PROJECT NUMBER SP-15-6(52)241

UTAH
COUNTY

C-346W
DRG. NO.

SHT. 23 OF 28

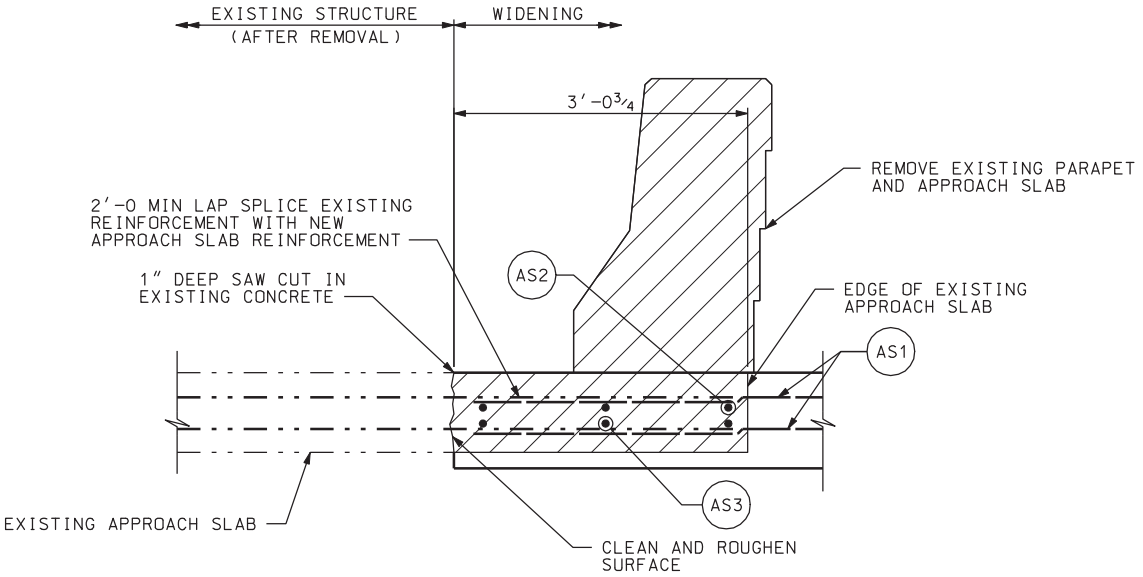


## SECTION B-B

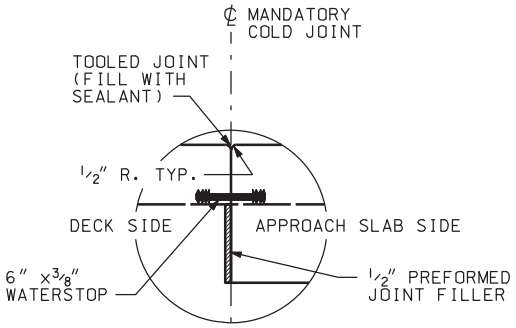


## WATERSTOP DETAIL

NOTE: THE COST OF CONCRETE REMOVAL IS INCIDENTAL TO THE COST OF "PREPARE BRIDGE FOR WIDENING" BID ITEM. SEE THE SPECIAL PROVISIONS FOR "PREPARE BRIDGE WIDENING".

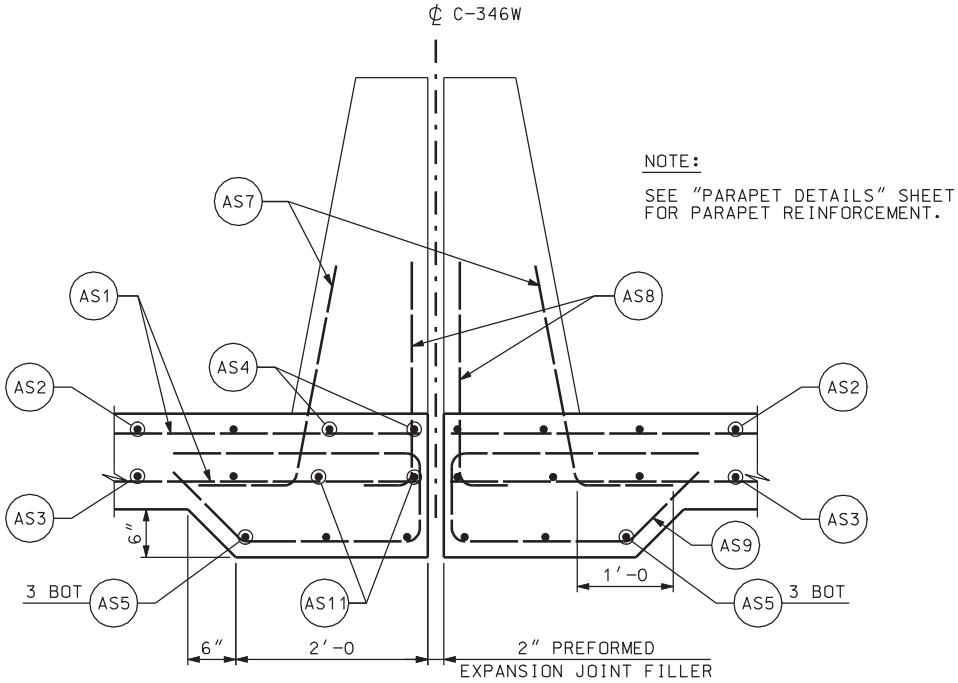


## SECTION C-C

| NO. | DATE | BY | REMARKS |
|---|---|---|---|
| | | | |

REVISIONS

UTAH DEPARTMENT OF TRANSPORTATION
SALT LAKE CITY, UTAH
STRUCTURES DIVISION

DESIGN KMR 10/04 CHECK KTF 10/04
DRAWN RDF 10/04 CHECK KTF 10/04
QUANT. CHECK

APPROVAL RECOMM. DATE SENIOR DESIGN ENGR.
APPROVED FOR USE BY UDOT DATE UDOT BRIDGE ENGR.

I-15; CORRIDOR IN UTAH COUNTY
100 EAST OVERPASS IN AMERICAN FORK
APPROACH SLAB DETAILS
PROJECT NUMBER SP-15-6(52)241

UTAH
COUNTY

C-346W
DRG. NO.

SHT. 24 OF 28

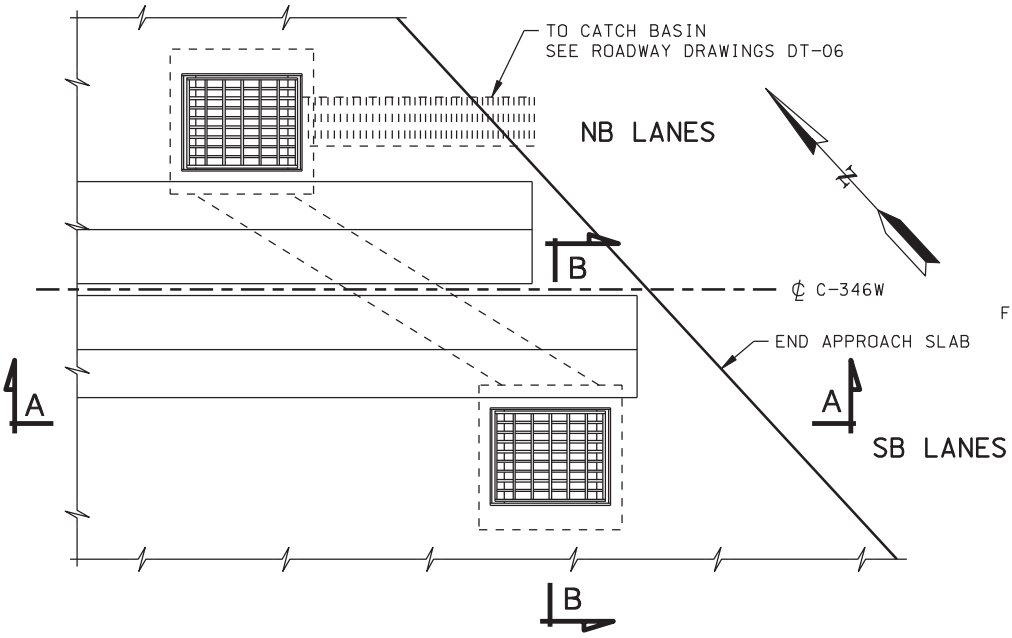


TYPICAL PLAN

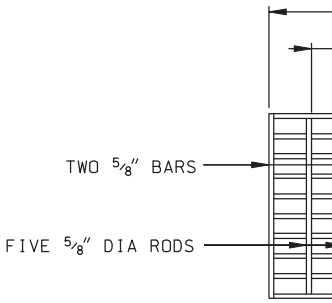


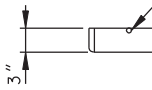


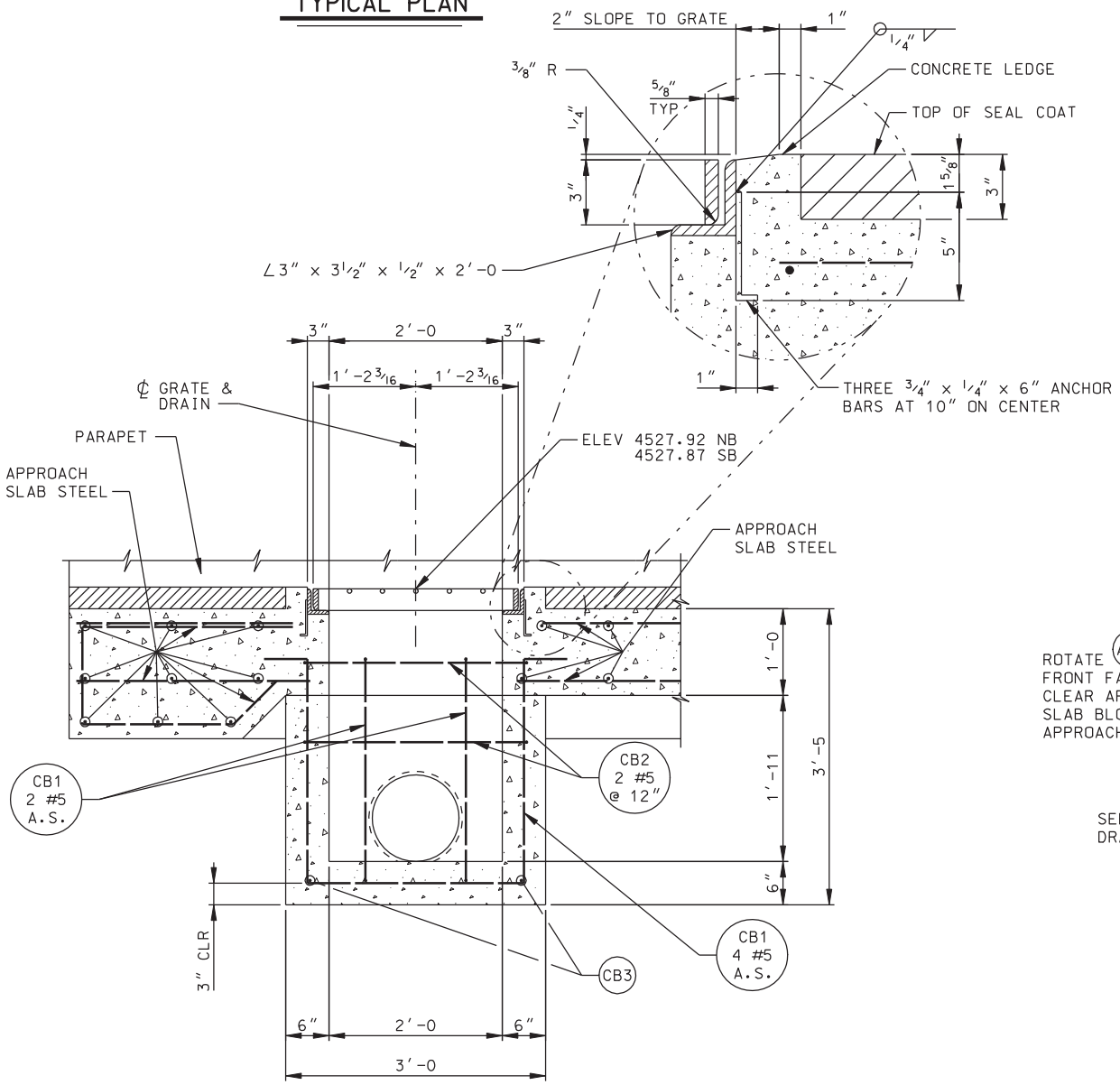


SECTION A-A

ROTATE (AS7) BA
FRONT FACE 90
CLEAR APPROAC
SLAB BLOCK OU
APPROACH SLAB

SEE ROA
DRAWING

DGN File:IP_PWPcdms1717\4433_C-346-25_APPDRN01.dgn

02-MAY-2005

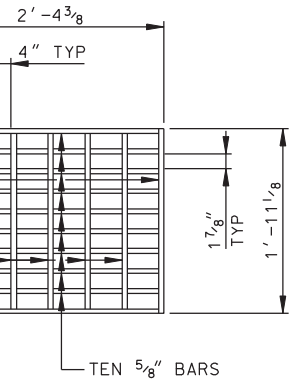


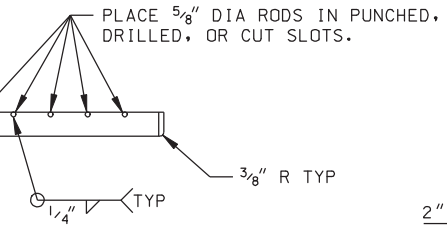


GRATE DETAIL

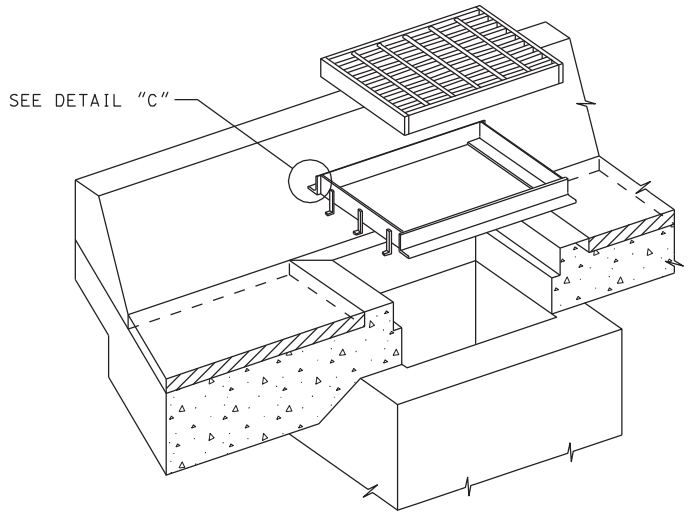


ISOMETRIC

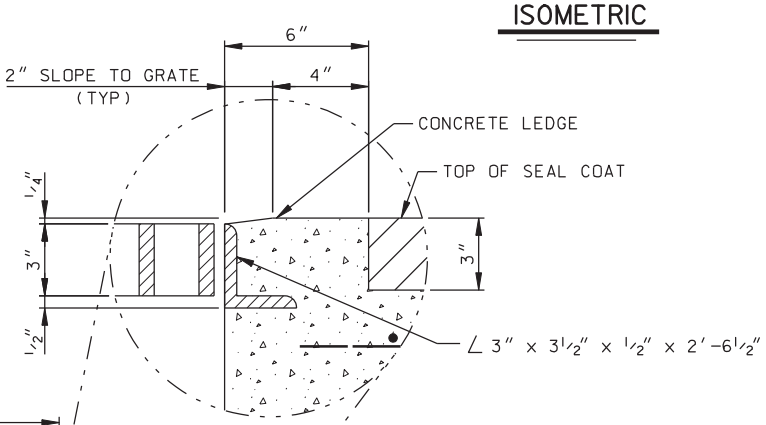


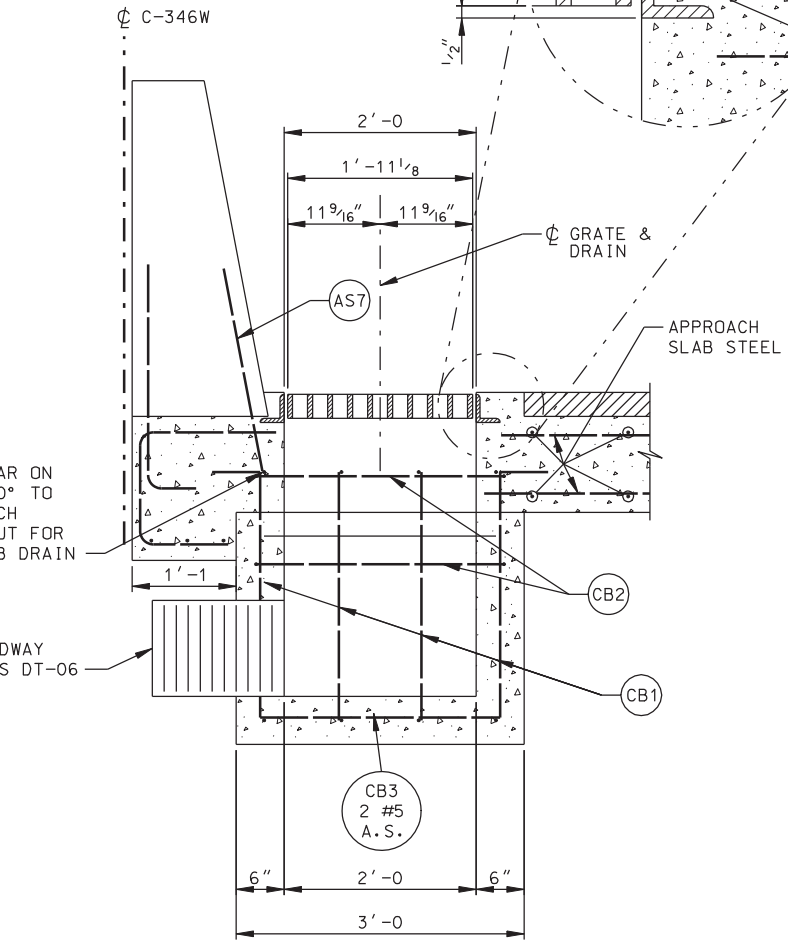


SECTION B-B

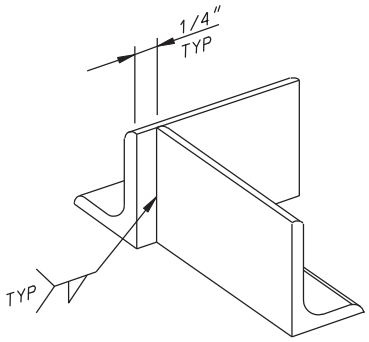


DETAIL "C"

## GENERAL NOTES

1. FIELD CUT OR BEND APPROACH SLAB REINFORCING TO CLEAR APPROACH SLAB DRAINS.
2. SEE "APPROACH SLAB PLAN" FOR THE ACTUAL LOCATION OF THE DRAIN.

| QUANTITIES STRUCTURAL CONCRETE | |
|---|---|
| 2 CATCH BASINS | 1.0 CY |

| QUANTITIES STRUCTURAL STEEL | |
|---|---|
| 2 GRATES & FRAMES | 546 LBS |

| NO. | DATE | BY | REMARKS |
|---|---|---|---|
| | | | |

REVISIONS

UTAH DEPARTMENT OF TRANSPORTATION
SALT LAKE CITY, UTAH
STRUCTURES DIVISION

DESIGN KMR 10/04 CHECK KTF 10/04
DRAWN RDF 10/04 CHECK KTF 10/04
QUANT. CHECK

APPROVAL RECOMM. DATE SENIOR DESIGN ENGR.
APPROVED FOR USE BY UDOT DATE UDOT BRIDGE ENGR.

I-15; CORRIDOR IN UTAH COUNTY
100 EAST OVERPASS IN AMERICAN FORK
APPROACH SLAB DRAIN DETAILS

PROJECT NUMBER SP-15-6(52)241

UTAH
COUNTY

C-346W
DRG. NO.

SHT. 25 OF 28

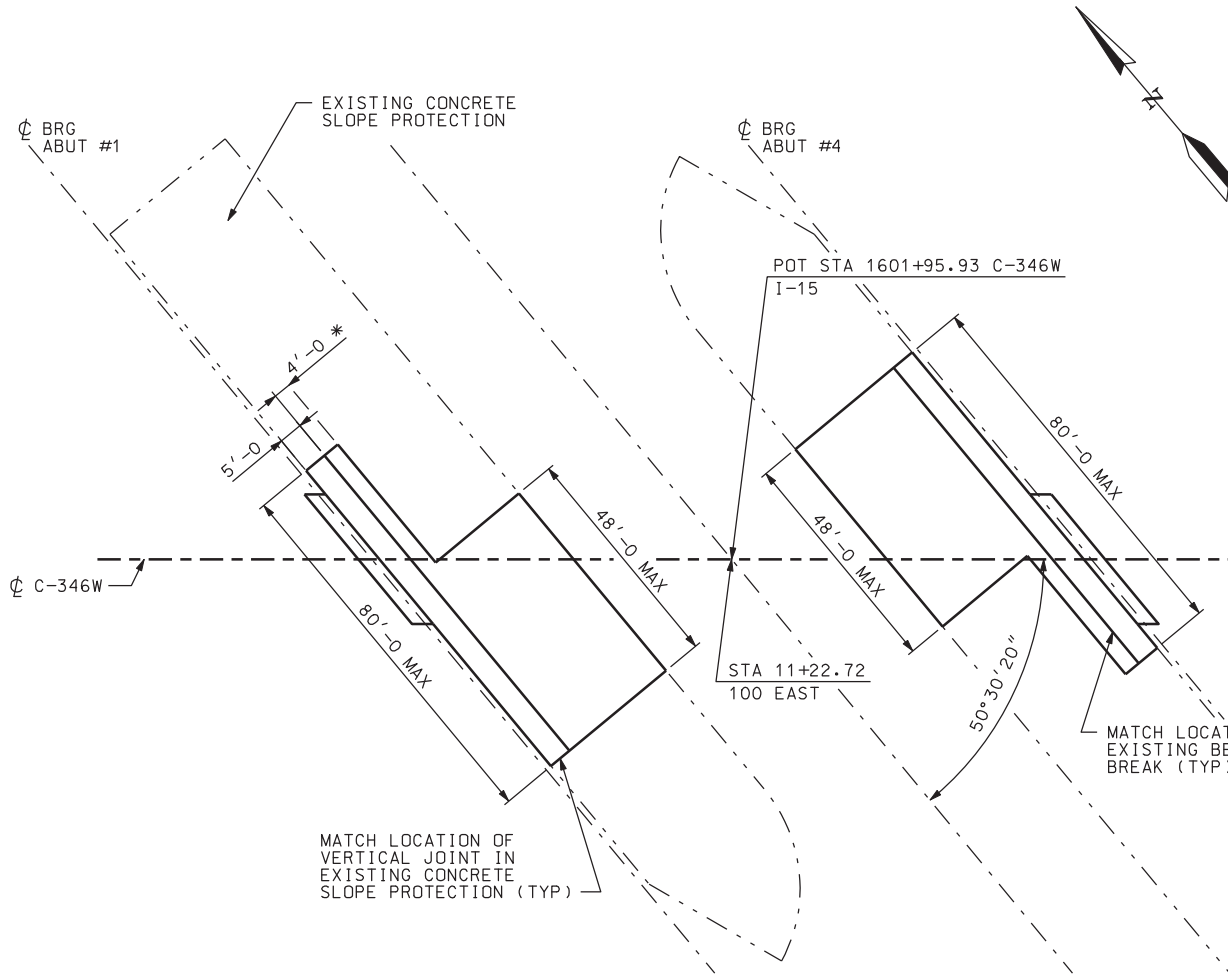


* MEASURED ALONG SLOPE

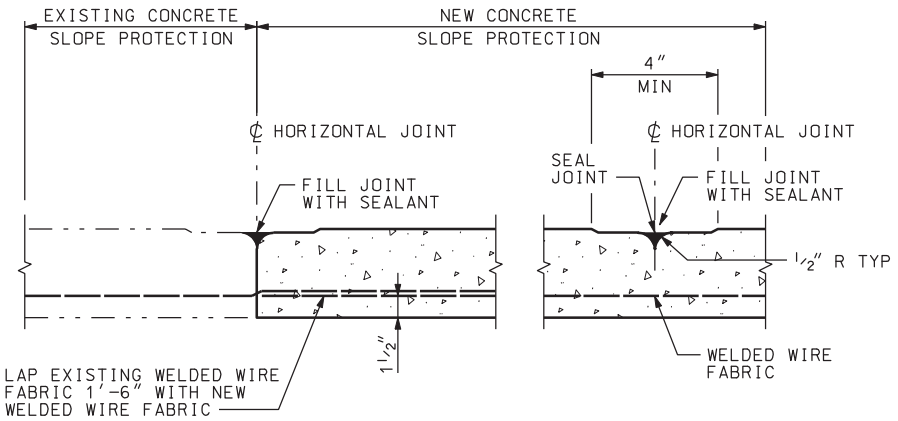


## HORIZONTAL JOINT DETAIL

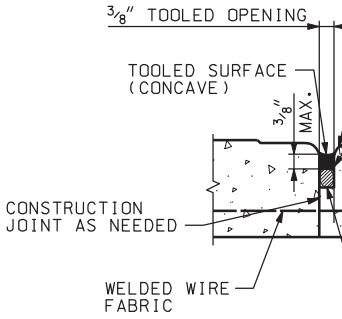


## V

DGN File: IP_PWPcdns1717\4433_C-346-26_SLOPE01.dgn

02-MAY-2005

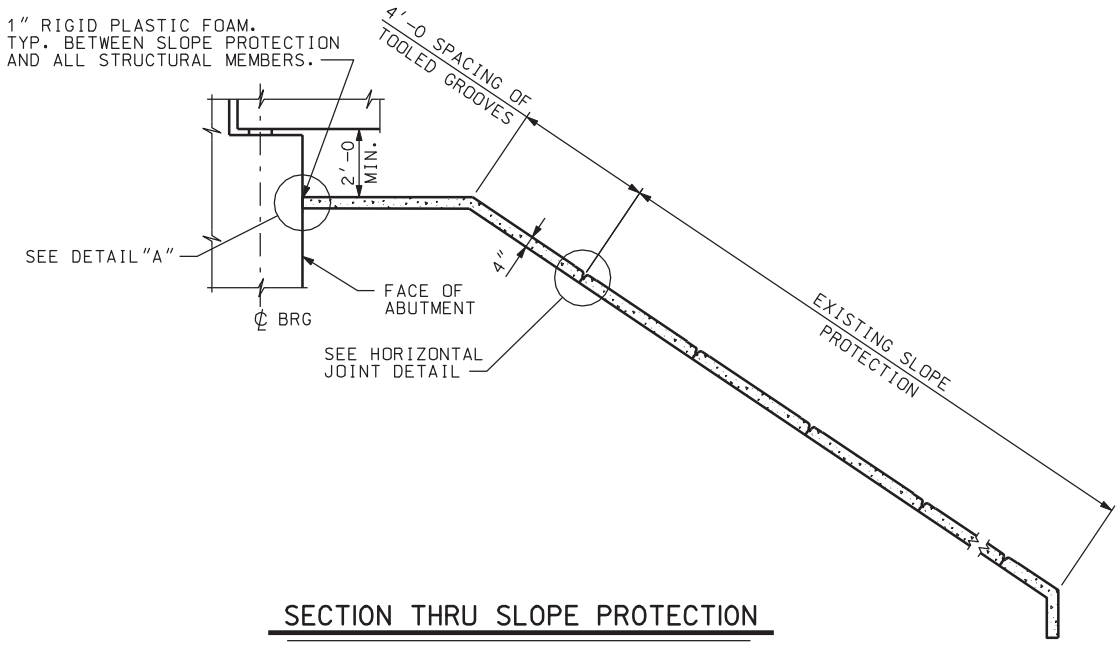


## SECTION THRU SLOPE PROTECTION

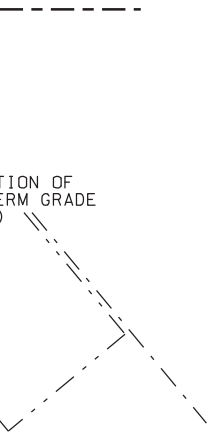


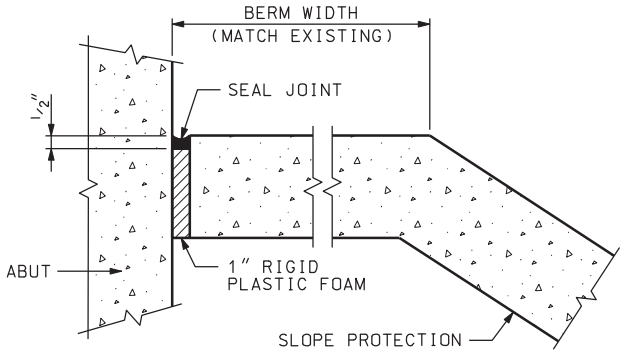


## DETAIL "A"

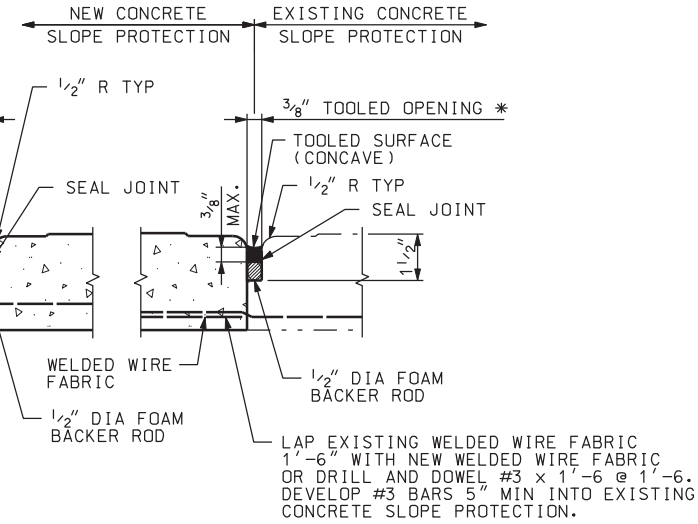


* NOTE: TOOL OPENING IN THE NEW CONCRETE SLOPE PROTECTION IF REQUIRED.

## VERTICAL JOINT DETAIL

## NOTES

1. QUANTITIES GIVEN FOR CONCRETE SLOPE PROTECTION ARE ESTIMATES ONLY AND ARE BASED ON THE EXPOSED FINISHED CONCRETE SURFACE AREA AT TIME OF PLACEMENT.
2. MATCH SPACING OF HORIZONTAL AND VERTICAL JOINTS OF THE EXISTING SLOPE PROTECTION.
3. MATCH THE ELEVATION AND SLOPE OF THE EXISTING SLOPE PROTECTION.
4. JUST PRIOR TO FINAL INSPECTION SEAL JOINTS BETWEEN THE CONCRETE SLOPE PROTECTION AND ALL STRUCTURAL MEMBERS.
5. USE CLASS A (AE) CONCRETE FOR ALL SLOPE PROTECTION.
6. USE WELDED WIRE FABRIC 6" x 6" - W 1.4 x W 1.4.

| QUANTITIES | |
|---|---|
| REPLACE CONCRETE SLOPE PROTECTION | 430 SQ. YDS |

| NO. | DATE | BY | REMARKS |
|---|---|---|---|
| | | | |

REVISIONS

UTAH DEPARTMENT OF TRANSPORTATION
SALT LAKE CITY, UTAH
STRUCTURES DIVISION

DESIGN PBB 10/04 CHECK JW 10/04
DRAWN RDF 10/04 CHECK JW 10/04
QUANT. PBB 10/04 CHECK JW 10/04

APPROVAL RECOMM. DATE SENIOR DESIGN ENGR.
APPROVED FOR USE BY UDOT DATE UDOT BRIDGE ENGR.

I-15; CORRIDOR IN UTAH COUNTY
100 EAST OVERPASS IN AMERICAN FORK
CONCRETE SLOPE PROTECTION
PROJECT NUMBER SP-15-6(52)241

UTAH
COUNTY

C-346W
DRG. NO.

SHT. 26 OF 28

# REINFORCING ST

| | MARK | SIZE | NUM | LENGTH | TOTAL | DIAGRAM |
|---|---|---|---|---|---|---|
| DECK | S1 | 5 | 66 | 159′-6 | 10,527′-0 | 2′-6, 2′-6, 152′-0 |
| | NUMBER OF SPLICES = 3 | | | | | |
| | S2 | 5 | 660 | 15′-1 | 9955′-0 | 15′-1 |
| | S3 | 5 | 60 | 25′-0 | 1500′-0 | 25′-0 |
| | S4 | 5 | 260 | 6′-0 | 1560′-0 | 6′-0 |
| | S5 | 5 | 364 | 8′-0½ | 2927′-2 | VARIES 1′-0 TO 15′-1 |
| | NO OF SETS | 4 | | | | |
| | BARS/ SET | 91 | | | | |
| | S6 | 5 | 330 | 3′-0 | 990′-0 | 7″, 2′-6 |
| | S7 | 5 | 330 | 4′-1 | 1347′-6 | 101°, 1′-0, 3′-2 |
| | S8 | 5 | 68 | 4′-0 | 272′-0 | 4′-0 |
| | S9 | 5 | 88 | 3′-4 | 293′-4 | 7″, 7″, 135°, 135°, 8″, 11″, 1′-1 |
| | S10 | 5 | 4 | 21′-8 | 86′-8 | 21′-8 |
| | S11 | 5 | 88 | 5′-2 | 454′-8 | 7″, 7″, 135°, 135°, 135°, 135°, 11″, 11″, 2′-8 |
| | S12 | 5 | 48 | 5′-1 | 244′-0 | 5′-1 |
| | S13 | 6 | 20 | 8′-0 | 160′-0 | 8′-0 |
| | S14 | 6 | 12 | 7′-2 | 86′-0 | 3′-8, 3′-8 |
| APPROACH SLAB | AS1 | 5 | 124 | 20′-0 | 2480′-0 | 20′-0 |
| | AS2 | 5 | 64 | 19′-6 | 1248′-0 | 19′-6 |
| | AS3 | 7 | 94 | 19′-6 | 1833′-0 | 19′-6 |
| | AS4 | 5 | 4 | 18′-0 | 72′-0 | 18′-0 |

| | MARK | SIZE | NUM | LENGTH | TOTA |
|---|---|---|---|---|---|
| APPROACH SLAB | AS5 | 7 | 12 | 18′-0 | 216′ |
| | AS6 | 5 | 4 | 18′-2 | 72′ |
| | AS7 | 5 | 82 | 4′-1 | 334′ |
| | AS8 | 5 | 82 | 3′-0 | 246′ |
| | AS9 | 5 | 138 | 5′-3 | 724′ |
| | AS10 | 7 | 12 | 20′-0 | 240′ |
| | AS11 | 7 | 4 | 18′-0 | 72′ |
| | AS12 | 6 | 12 | 7′-2 | 86′ |
| PARAPETS | P1 | 4 | 452 | 3′-2 | 1431 |
| | P2 | 4 | 452 | 3′-9 | 1695 |
| | P3 | 4 | 18 | 17′-8 | 318′ |
| | P4 | 4 | 18 | 18′-11 | 340′ |
| | P5 | 4 | 18 | 159′-6 | 2871 |
| | NUMBER OF SPLICES = 3 | | | | |
| FOOTING | F11 | 8 | 136 | 10′-6 | 1428′ |
| | F12 | 10 | 112 | 10′-6 | 1176′ |
| | F13 | 5 | 416 | 4′-6 | 1872′ |
| COLUMN | C21 | 8 | 40 | 24′-4 | 973′ |
| | C22 | 5 | 232 | 11′-8 | 2706′ |

DGN File:IP_PWPcdms1717\4433_C-346-27_RBSCH01.dgn

02-MAY-2005

# TEEL SCHEDULE

| AL | DIAGRAM |
|---|---|
| -0 | 18′-0 |
| -8 | 18′-2 |
| -10 | 101°, 1′-0, 3′-2 |
| -0 | 7″, 2′-6 |
| -6 | 2′-6, 8″, 10″, 1′-8 |
| -0 | 20′-0 |
| -0 | 18′-0 |
| -0 | 3′-8, 3′-8 |
| ′-4 | 3′-2 |
| ′-0 | 7″, 79°, 3′-3 |
| -0 | 17′-8 |
| -6 | 18′-11 |
| ′-0 | 2′-6, 2′-6, 152′-0 |
| -0 | 10′-6 |
| -0 | 10′-6 |
| -0 | 3′-3 |
| -4 | 22′-1 |
| -8 | 2′-8, 2′-8 |

| | MARK | SIZE | NUM | LENGTH | TOTAL | DIAGRAM |
|---|---|---|---|---|---|---|
| COLUMN | C23 | 5 | 928 | 5′-3 | 4872′-0 | 2′-6, 7″ |
| | C24 | 5 | 24 | 3′-8 | 88′-0 | 3′-0 |
| | C25 | 8 | 40 | 24′-0 | 960′-0 | 21′-9 |
| BENT CAP | B20 | 5 | 12 | 8′-2 | 98′-0 | 2′-6, 2′-6, 3′-5 |
| | B21 | 8 | 40 | 9′-0 | 360′-0 | 9′-0 |
| | B22 | 5 | 12 | 7′-3 | 87′-0 | 3′-0, 3′-0, 1′-6 |
| | B23 | 11 | 40 | 20′-5 | 816′-8 | 17′-1 |
| | B24 | 9 | 40 | 17′-3 | 690′-0 | 162°, 164°, 5′-9, 3′-4, 8′-2 |
| | B25 | 5 | 24 | 17′-1 | 410′-0 | 17′-1 |
| | B26 | 5 | 16 | 11′-2 | 178′-8 | VARIES 8′-4 TO 14′-0 |
| | NO OF SETS | 2 | | | | |
| | BARS/ SET | 8 | | | | |
| | B27 | 5 | 112 | 10′-5 | 1166′-8 | VARIES 2′-2 TO 3′-8, 3′-5 |
| | NO OF SETS | 14 | | | | |
| | BARS/ SET | 8 | | | | |

| NO. | DATE | BY | REMARKS |
|---|---|---|---|
| | | | |

REVISIONS

UTAH DEPARTMENT OF TRANSPORTATION
SALT LAKE CITY, UTAH
STRUCTURES DIVISION

DESIGN JW 11/04 CHECK PBB 11/04
DRAWN RDF 11/04 CHECK PBB 11/04
QUANT. PBB 11/04 CHECK JW 11/04

APPROVAL RECOMM. DATE SENIOR DESIGN ENGR.
APPROVED FOR USE BY UDOT DATE UDOT BRIDGE ENGR.

I-15; CORRIDOR IN UTAH COUNTY
100 EAST OVERPASS IN AMERICAN FORK
REINFORCING STEEL SCHEDULE 1

PROJECT NUMBER SP-15-6(52)241

UTAH
COUNTY

C-346W
DRG. NO.

SHT. 27 OF 28

# REINFORCING ST

| | MARK | SIZE | NUM | LENGTH | TOTAL | DIAGRAM |
|---|---|---|---|---|---|---|
| BENT CAP | B28 | 5 | 336 | 4′-8 | 1568′-0 | 3′-5 |
| | B29 | 5 | 224 | 4′-2 | 933′-4 | VARIES 2′-2 TO 3′-8 |
| | NO OF SETS | 14 | | | | |
| | BARS/ SET | 16 | | | | |
| | B30 | 5 | 30 | 6′-0 | 180′-0 | 101° 2′-0 2′-0 2′-2 |
| ABUTMENTS | A1 | 5 | 96 | 15′-8 | 1504′-0 | 15′-8 |
| | A2 | 5 | 32 | 5′-1 | 162′-8 | 4′-5 |
| | A3 | 5 | 64 | 6′-7 | 421′-4 | 1′-6 1′-6 3′-10 |
| | A4 | 5 | 64 | 8′-11 | 570′-8 | 4′-0 4′-0 1′-2 |
| | A5 | 5 | 64 | 3′-11 | 250′-8 | 2′-0 2′-0 |
| | A6 | 5 | 5 | 2′-1 | 10′-5 | 2′-1 |
| | A7 | 5 | 8 | 3′-9 | 30′-0 | 2′-0 65° 2′-0 |
| | A8 | 5 | 72 | 5′-1 | 366′-0 | 3′-10 |
| | A9 | 5 | 32 | 6′-1 | 194′-8 | 5′-5 |
| | A10 | 5 | 32 | 5′-5 | 173′-4 | 4′-9 |
| | A11 | 5 | 32 | 7′-3 | 232′-0 | 6′-7 |
| | A12 | 5 | 5 | 3′-1 | 15′-5 | 3′-1 |
| | A13 | 5 | 5 | 2′-5 | 12′-1 | 2′-5 |
| | A14 | 5 | 5 | 4′-3 | 21′-3 | 4′-3 |
| | A15 | 5 | 72 | 3′-0 | 216′-0 | 3′-0 |

| | MARK | SIZE | NUM | LENGTH | TOTA |
|---|---|---|---|---|---|
| ABUTMENTS | F1 | 6 | 60 | 8′-5 | 505′ |
| | F2 | 8 | 60 | 12′-0 | 720′ |
| | F3 | 6 | 64 | 14′-0 | 896′ |

DGN File:IP_PWPcdms1717\4433_C-346-28_RBSCH02.dgn

02-MAY-2005

# TEEL SCHEDULE

| AL | DIAGRAM |
|---|---|
| -0 | 8'-5 |
| -0 | 2'-0, 8'-5, 2'-0 |
| -0 | 14'-0 |

| | MARK | SIZE | NUM | LENGTH | TOTAL | DIAGRAM |
|---|---|---|---|---|---|---|

## SUMMARY

#4 @ 0.668 LBS/FT = 4439 LBS
#5 @ 1.043 LBS/FT = 55,959 LBS
#6 @ 1.502 LBS/FT = 2602 LBS
#7 @ 2.044 LBS/FT = 4827 LBS
#8 @ 2.670 LBS/FT = 11,857 LBS
#9 @ 3.400 LBS/FT = 2342 LBS
#10 @ 4.303 LBS/FT = 5061 LBS
#11 @ 5.313 LBS/FT = 4333 LBS

TOTAL = 91,420 LBS

## NOTES

1. ALL DIMENSIONS ARE OUT TO OUT BAR UNLESS NOTED OTHERWISE.
2. ALL ANGLES ARE 90° UNLESS NOTED OTHERWISE.
3. ALL BARS ARE COATED.
4. SPLICES MAY BE OMITTED AT FABRICATOR'S OPTION. FABRICATOR ASSUMES RESPONSIBILITY FOR FIT. SPLICES ARE BASED ON 40 FT BAR LENGTHS.
5. ALL REINFORCING STEEL IS INCLUDED IN THE PAY ITEM REINFORCING STEEL-COATED.

| NO. | DATE | BY | REMARKS |
|---|---|---|---|

REVISIONS

UTAH DEPARTMENT OF TRANSPORTATION
SALT LAKE CITY, UTAH
STRUCTURES DIVISION

DESIGN RDF 11/04 CHECK PBB 11/04
DRAWN RDF 11/04 CHECK PBB 11/04
QUANT. PBB 11/04 CHECK JW 11/04

APPROVAL RECOMM. DATE SENIOR DESIGN ENGR.
APPROVED FOR USE BY UDOT DATE UDOT BRIDGE ENGR.

I-15; CORRIDOR IN UTAH COUNTY
100 EAST OVERPASS IN AMERICAN FORK
REINFORCING STEEL SCHEDULE 2
PROJECT NUMBER SP-15-6(52)241

UTAH
COUNTY

C-346W
DRG. NO.

SHT. 28 OF 28

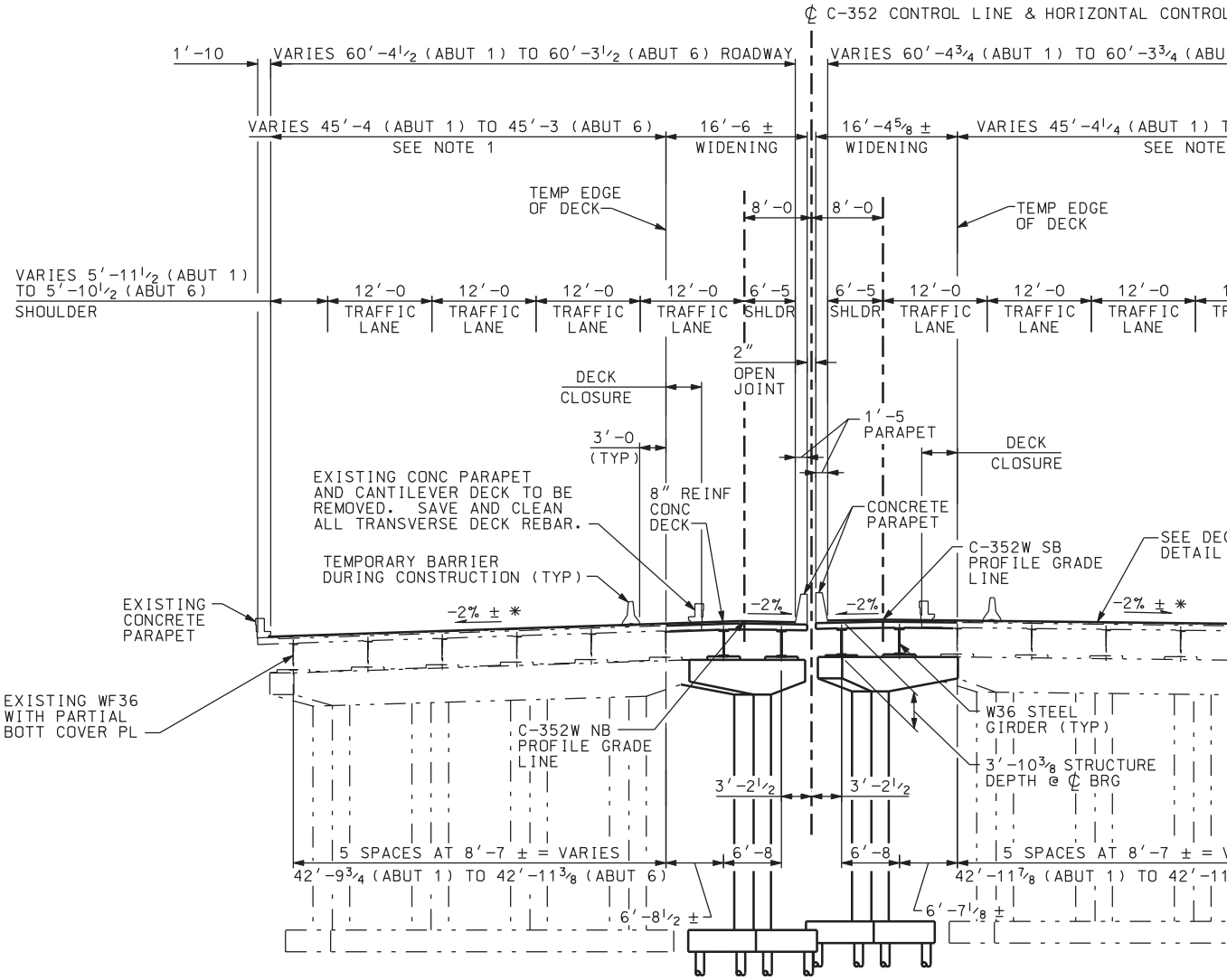


## SECTION THROUGH STRUCTURE

* MATCH EXISTING CROSS SLOPE

## NOTES

1. PARTIALLY REMOVE EXISTING ASPHALT SURFACING OVERLAY. SEE M-91 SHEETS FOR TRANSITION AND REHABILITATION DETAILS.
2. APPLY WATERPROOFING MEMBRANE AND PLACE 2" HMA MIX - ½" AND 1" PLANT MIX SEAL COAT (TOTAL THICKNESS = 3").
3. PROFILE GRADE LINE IS TAKEN AT TOP OF NEW CONCRETE DECK.

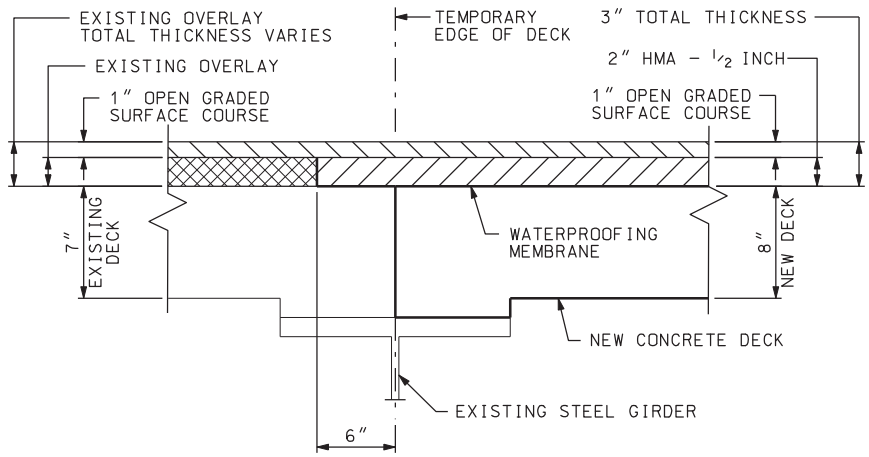


## DECK OVERLAY DETAIL

## INDEX C


1. SITUATION & LAYOUT 1
2. SITUATION & LAYOUT 2
3. SITUATION & LAYOUT 3
4. SOIL DATA SHEET 1
5. SOIL DATA SHEET 2
6. SOIL DATA SHEET 3
7. DRIVEN PILE DETAILS
8. FOUNDATION PLAN 1
9. FOUNDATION PLAN 2
10. ABUTMENT PLAN & ELEVATION 1
11. ABUTMENT PLAN & ELEVATION 2
12. ABUTMENT DETAILS 1
13. ABUTMENT DETAILS 2
14. ABUTMENT DETAILS 3
15. ABUTMENT DETAILS 4
16. ABUTMENT DETAILS 5
17. ABUTMENT DETAILS 6
18. ABUTMENT 1 REINFORCEMENT
19. ABUTMENT 6 REINFORCEMENT
20. BENT PLAN & ELEVATION
21. BENT DETAILS 1
22. BENT DETAILS 2
23. BENT DETAILS 3
24. BENT REINFORCEMENT
25. BENT FOOTING DETAILS 1
26. BENT FOOTING DETAILS 2
27. FRAMING PLAN 1


DGN File:IP_PWPcdms1717\4433_C-352-01_SL01.dgn
02-MAY-2005

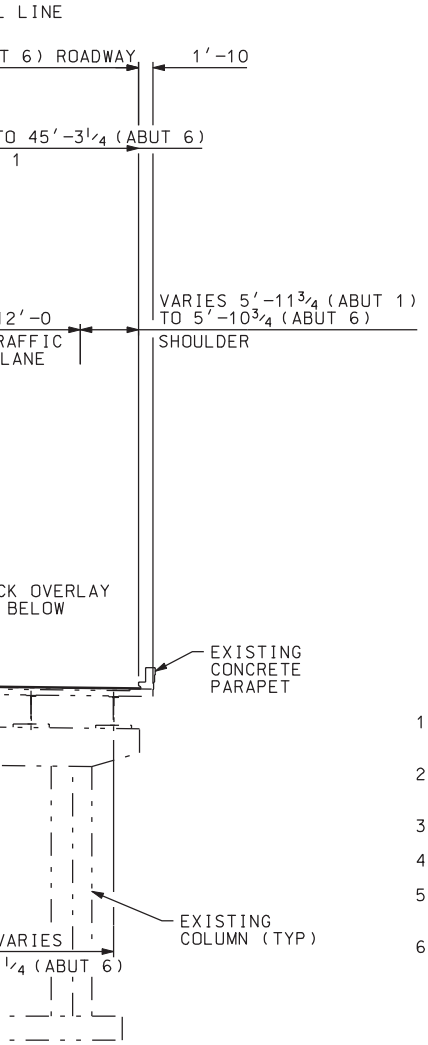


## DESIGN DATA

HL-93 LOADING IN ACCORDANCE WITH AASHTO LRFD BRIDGE DESIGN SPECIFICATIONS 3rd EDITION, 2004.

INVENTORY AND OPERATING RATINGS FOR HS20-44 ARE IN ACCORDANCE WITH THE AASHTO MANUAL FOR CONDITION ELEVATION OF BRIDGES, 2nd EDITION, AND THE 2001 AND 2003 INTERIM SPECIFICATIONS LOAD FACTOR METHOD. INVENTORY AND OPERATING RATINGS FOR HL-93 ARE IN ACCORDANCE WITH THE GUIDE MANUAL FOR CONDITION EVALUATION AND LOAD RESISTANCE FACTOR RATING (LRFR) OF HIGHWAY BRIDGES.

| | | OPERATING RATING | INVENTORY RATING |
|---|---|---|---|
| EXISTING GIRDERS: | (HS-20) | 2.85 | 1.71 |
| | (HL-93) | 2.59 | 2.00 |
| NEW GIRDERS: | (HL-93) | 2.77 | 2.14 |

CAST-IN-PLACE CONCRETE: f'c = 4000 PSI; fy (REINF) = 60 KSI

CLASS AA/AE: n = 8.0

STRUCTURAL STEEL: Fy = 50 KSI

WEARING SURFACE: 3" ASPHALT (NOW) 35 PSF, 0 PSF FWS

DESIGN SPEED: I-15 = 70 M.P.H.; SR 114 = 40 M.P.H.

SEISMIC: SEISMIC DESIGN PARAMETERS
(500 YR RETURN PERIOD, 10% PE IN 50 YR)
Ss = MAX CONSIDERED EQ GROUND MOTION AT 0.2s = 0.44g
S1 = MAX CONSIDERED EQ GROUND MOTION AT 1.0s = 0.15g
SITE CLASS D
EXISTING STRUCTURE ELEMENTS DO NOT MEET SEISMIC DESIGN CRITERIA

## GENERAL NOTES

1. USE COATED DEFORMED BILLET- STEEL BARS CONFORMING TO AASHTO M 284 OR M 111 AND M 31 GRADE 60 FOR ALL REINFORCING STEEL.
2. CONFORM ALL STRUCTURAL STEEL TO AASHTO M 270 GRADE 50 EXCEPT WHERE NOTED OTHERWISE.
3. CHAMFER ALL EXPOSED CONCRETE CORNERS 3/4" EXCEPT WHERE NOTED OTHERWISE.
4. PROVIDE 2" CONCRETE COVER TO REINFORCING STEEL EXCEPT WHERE NOTED OTHERWISE.
5. USE CLASS AA (AE) FOR CAST-IN-PLACE CONCRETE EXCEPT WHERE SPECIFIED OTHERWISE.
6. ALL NEW SUBSTRUCTURE ELEMENTS ARE DESIGNED TO ALIGN WITH A BEST FIT LINE CONNECTING EXISTING ELEMENTS. FIELD VERIFY ALL CONTROLLING DIMENSIONS PRIOR TO CONSTRUCTION AND FABRICATION OF ANY MATERIALS. REPORT ANY DISCREPANCY BETWEEN THESE PLANS AND THE EXISTING STRUCTURE TO THE ENGINEER. DO NOT CONSTRUCT OR FABRICATE ANY ELEMENTS UNTIL THE DISCREPANCIES ARE RESOLVED. ALL STRUCTURE GEOMETRY IS BASED ON LOCAL SURVEY CONTROL POINTS SHOWN ON THE FOUNDATION PLAN. THE I-15 STATIONING AND ALIGNMENT IS FOR INFORMATION ONLY. ABUTMENT/PIER DIRECTIONS AND LOCATIONS USED IN THE DESIGN ARE LISTED.
7. SEE EXISTING STRUCTURE C-352 PLANS FOR ADDITIONAL INFORMATION.
8. DO NOT SCALE DRAWINGS.
9. HORIZONTAL DIMENSIONS ARE PLAN. VERTICAL DIMENSIONS ARE PLUMB.
10. ALL DECK, APPROACH SLAB AND PROFILE GRADE ELEVATIONS ARE AT TOP OF CONCRETE.
11. VERIFY RELATIVE ELEVATION DIFFERENCES BETWEEN C-352 AND C-352W AT BOTTOM OF NBL AND SBL INTERIOR MOST EXISTING BEAMS AT FRONT FACE OF ABUTMENT #1, SEE "ABUTMENT DETAILS" SHEET. IF THE RELATIVE ELEVATION DIFFERENCES VARY BY MORE THAN +/- 1", ADJUST ALL PLAN ELEVATIONS ACCORDINGLY AND SUBMIT TOP THE ENGINEER FOR APPROVAL BEFORE MAKING ANY ADJUSTMENTS IN THE FIELD.
12. SHORING PLAN MUST BE DESIGNED TO MEET THE REQUIREMENTS OUTLINED IN UPRR GENERAL SHORING REQUIREMENTS C.E. 106613.
13. NO WORK MAY BE PERFORMED WITHIN 25 FEET OF TRACK CENTERLINE WHEN A TRAIN PASSES THE SITE.
14. NO DRAINAGE FROM OVERPASS STRUCTURE MAY BE DISCHARGED ONTO UPRR RIGHT OF WAY.
15. DEMOLITION TO COMPLY WITH UPRR GUIDELINES AND NO DEMOLITION SHALL TAKE PLACE OVER RAILROAD TRACKS WITHOUT THE APPROVALOF UPRR.
16. MAINTAIN MINIMUM CONSTRUCTION CLEARANCES OF 21' VERTICALLY ABOVE THE PLANE OF TOP-OF-RAIL AND 8'-1 1/2 ± HORIZONTALLY AT A RIGHT ANGLE FROM CENTERLINE OF TRACK.
17. POT STATION EQUATION POINTS FROM WHICH ℄ C-352W AS DEFINED ARE SET APPROXIMATELY AT THE END OF THE APPROACH SLABS.

## QUANTITIES

| ITEM | EST | UNIT | AS CONSTR |
|---|---|---|---|
| GRANULAR BACKFILL BORROW (PLAN QUANTITY) | 746 | CU YD | |
| PILE DRIVING EQUIPMENT | 1 | LUMP | |
| DRIVEN PILES 12 3/4 INCH | 8051 | FEET | |
| REINFORCING STEEL - COATED | 198,209 | LBS | |
| STRUCTURAL CONCRETE (EST QTY 914 CY) | 1 | LUMP | |
| PREPARE BRIDGE FOR WIDENING | 1 | LUMP | |
| STRUCTURAL STEEL (EST QTY 321,481 LBS) | 1 | LUMP | |
| REPLACE CONCRETE SLOPE PROTECTION | 523 | SQ YD | |
| PREBORE EQUIPMENT AND PREBORE (IF REQUIRED) | 2195 | FEET | |
| DYNAMIC PILE TESTING | 12 | EACH | |

## OF SHEETS


28. FRAMING PLAN 2
29. GIRDER DETAILS
30. DIAPHRAGM DETAILS 1
31. DIAPHRAGM DETAILS 2
32. DIAPHRAGM DETAILS 3
33. BEARING DETAILS 1
34. BEARING DETAILS 2
35. STEEL BOLSTER DETAILS
36. DECK PLAN 1
37. DECK PLAN 2
38. DECK SECTIONS
39. SCREED ELEVATIONS 1
40. SCREED ELEVATIONS 2
41. PARAPET DETAILS
42. PARAPET END DETAILS
43. APPROACH SLAB PLAN
44. APPROACH SLAB DETAILS
45. APPROACH SLAB DRAIN DETAILS
46. CONCRETE SLOPE PROTECTION 1
47. CONCRETE SLOPE PROTECTION 2
48. REINFORCING STEEL SCHEDULE 1
49. REINFORCING STEEL SCHEDULE 2
50. REINFORCING STEEL SCHEDULE 3
51. REINFORCING STEEL SCHEDULE 4
52. REINFORCING STEEL SCHEDULE 5
53. REINFORCING STEEL SCHEDULE 6


| NO. | DATE | BY | REMARKS |
|---|---|---|---|

REVISIONS

UTAH DEPARTMENT OF TRANSPORTATION
SALT LAKE CITY, UTAH
STRUCTURES DIVISION
PARSONS

DESIGN HM 12/04 CHECK MBD 01/05
DRAWN TA 12/04 CHECK MBD 01/05
QUANT. STB 12/04 CHECK MB 01/05

APPROVAL RECOMM. DATE SENIOR DESIGN ENGR.
APPROVED FOR USE BY UDOT DATE UDOT BRIDGE ENGR.

I-15; CORRIDOR IN UTAH COUNTY
I-15 OVER UPRR AND SR-114 IN LINDON
SITUATION AND LAYOUT 1

PROJECT NUMBER SP-15-6(52)241

UTAH
COUNTY

C-352W
DRG. NO.

SHT. 1 OF 53

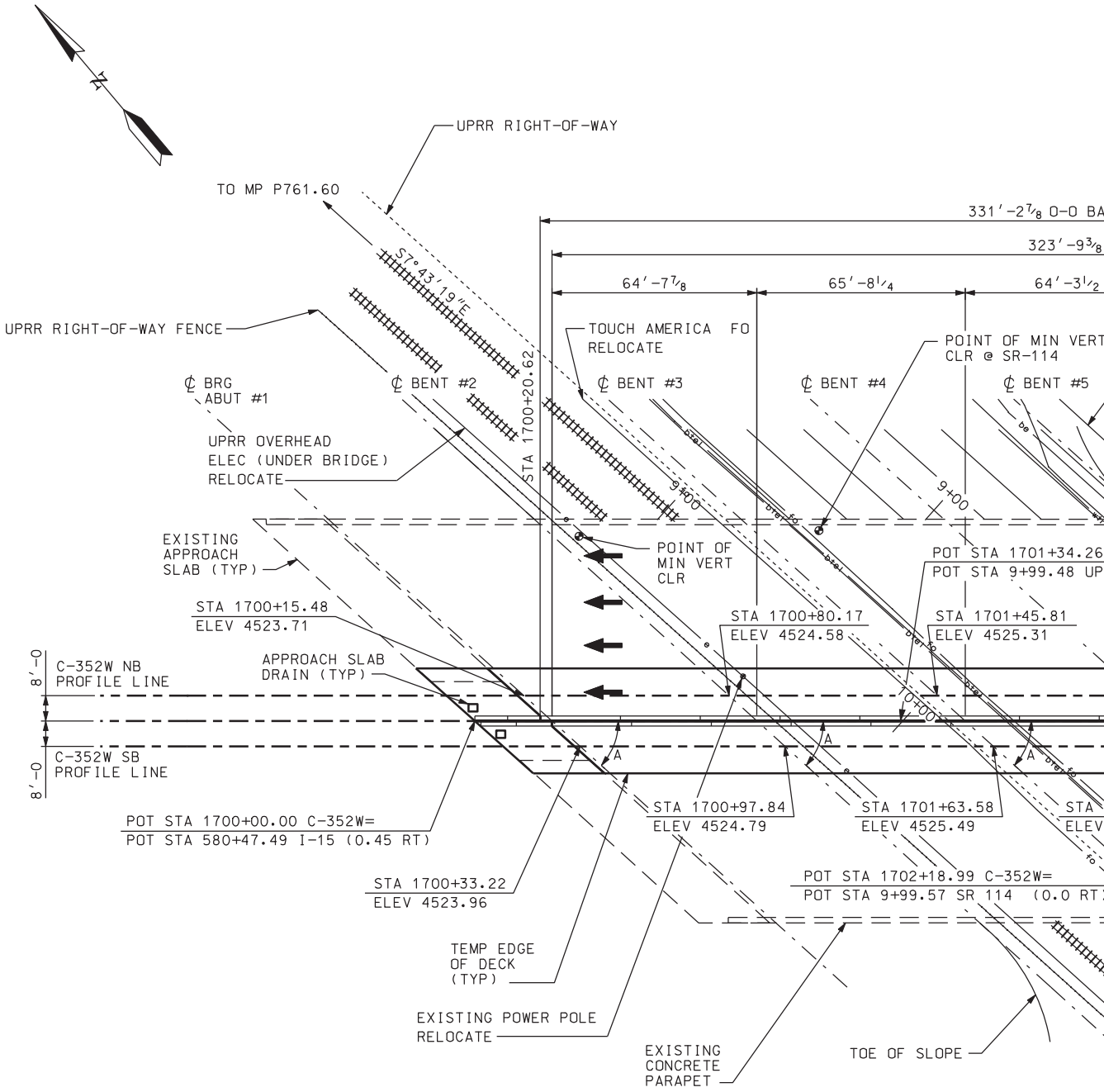


| | BEARING | ANGLE A |
|---|---|---|
| ABUT #1 | S7°42'53"E | 42°02'23" |
| BENT #2 | S7°35'04"E | 42°10'12" |
| BENT #3 | S7°45'08"E | 42°00'08" |
| BENT #4 | S7°51'53"E | 41°53'23" |
| BENT #5 | S7°51'32"E | 41°53'45" |
| ABUT #6 | S7°43'18"E | 42°01'58" |

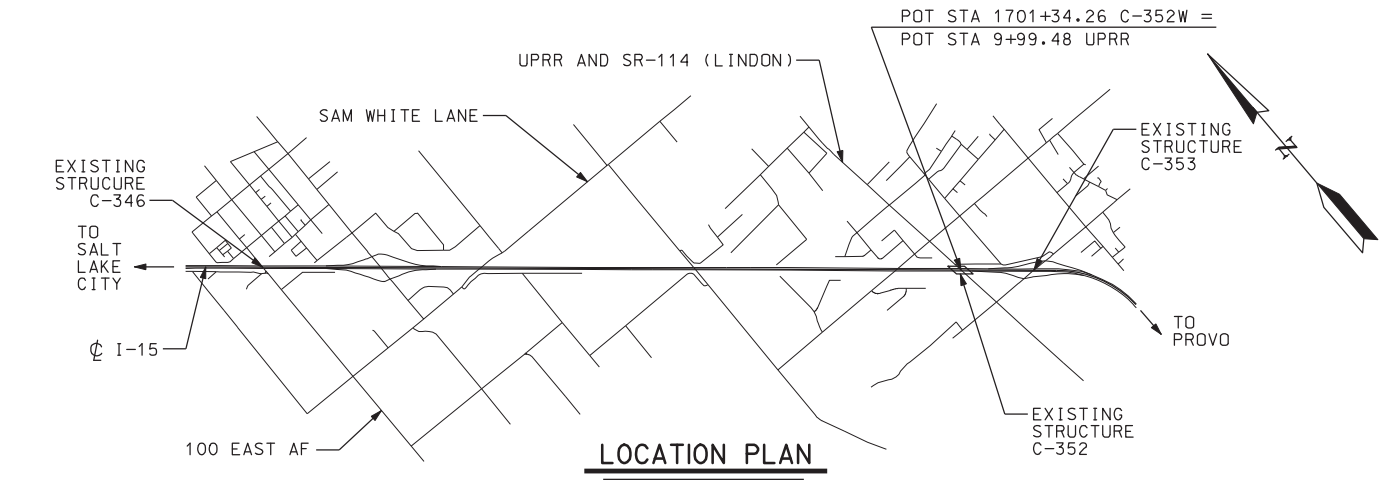


## LOCATION PLAN

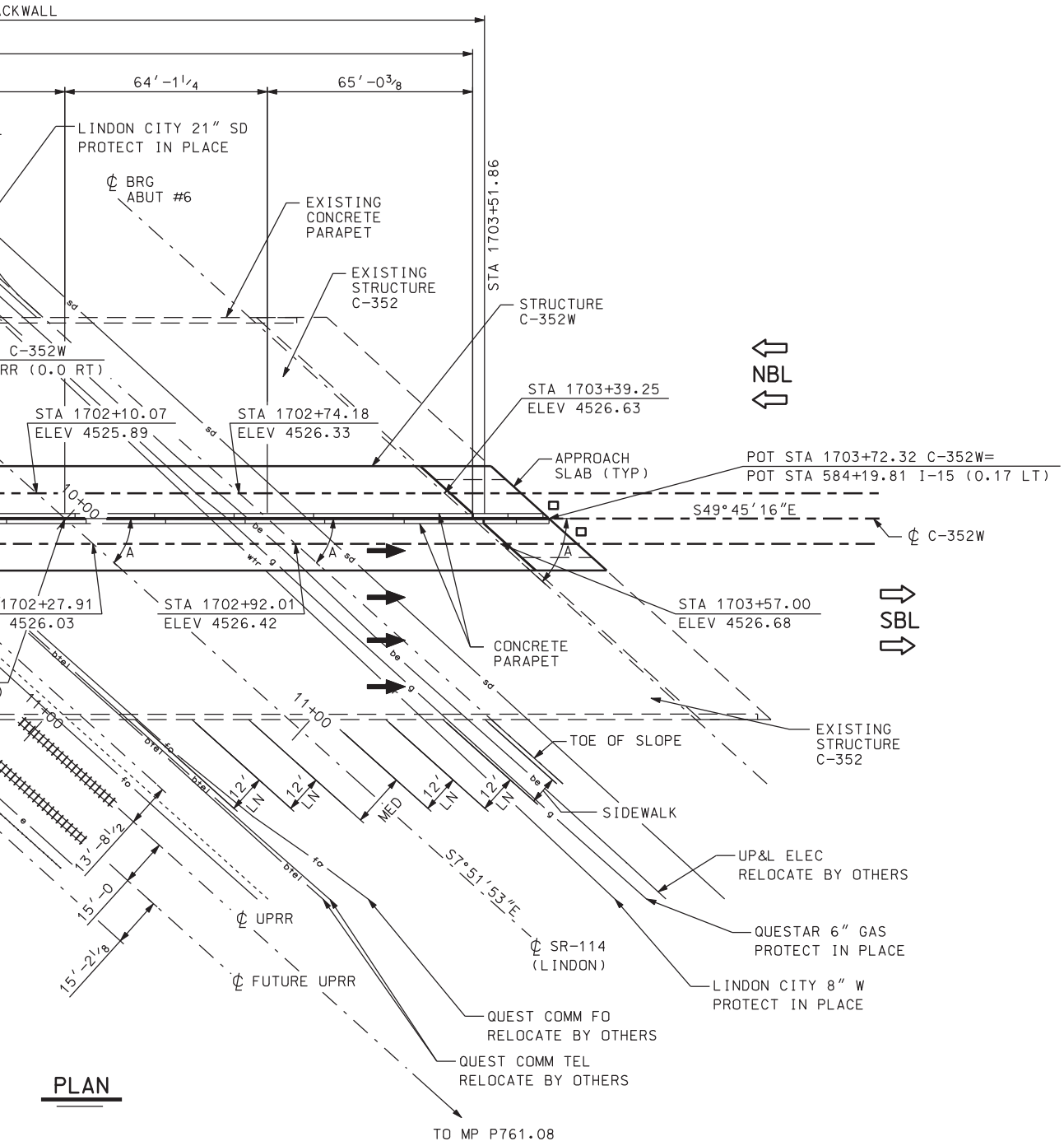


## PLAN

| NO. | DATE | BY | REMARKS |
|---|---|---|---|
| | | | |

REVISIONS

UTAH DEPARTMENT OF TRANSPORTATION
SALT LAKE CITY, UTAH
STRUCTURES DIVISION

PARSONS

| | | | |
|---|---|---|---|
| DESIGN HM 12/04 | CHECK MBD 01/05 | CHECK MBD 01/05 | CHECK MBD 01/05 |
| DRAWN TA 12/04 | | | |
| QUANT. STB 12/04 | | | |

APPROVAL RECOMM. DATE SENIOR DESIGN ENGR.

APPROVED FOR USE BY UDOT DATE UDOT BRIDGE ENGR.

I-15; CORRIDOR IN UTAH COUNTY
I-15 OVER UPRR AND SR-114 IN LINDON
SITUATION & LAYOUT 2

PROJECT NUMBER SP-15-6(52)241

UTAH
COUNTY

C-352W
DRG. NO.

SHT. 2 OF 53

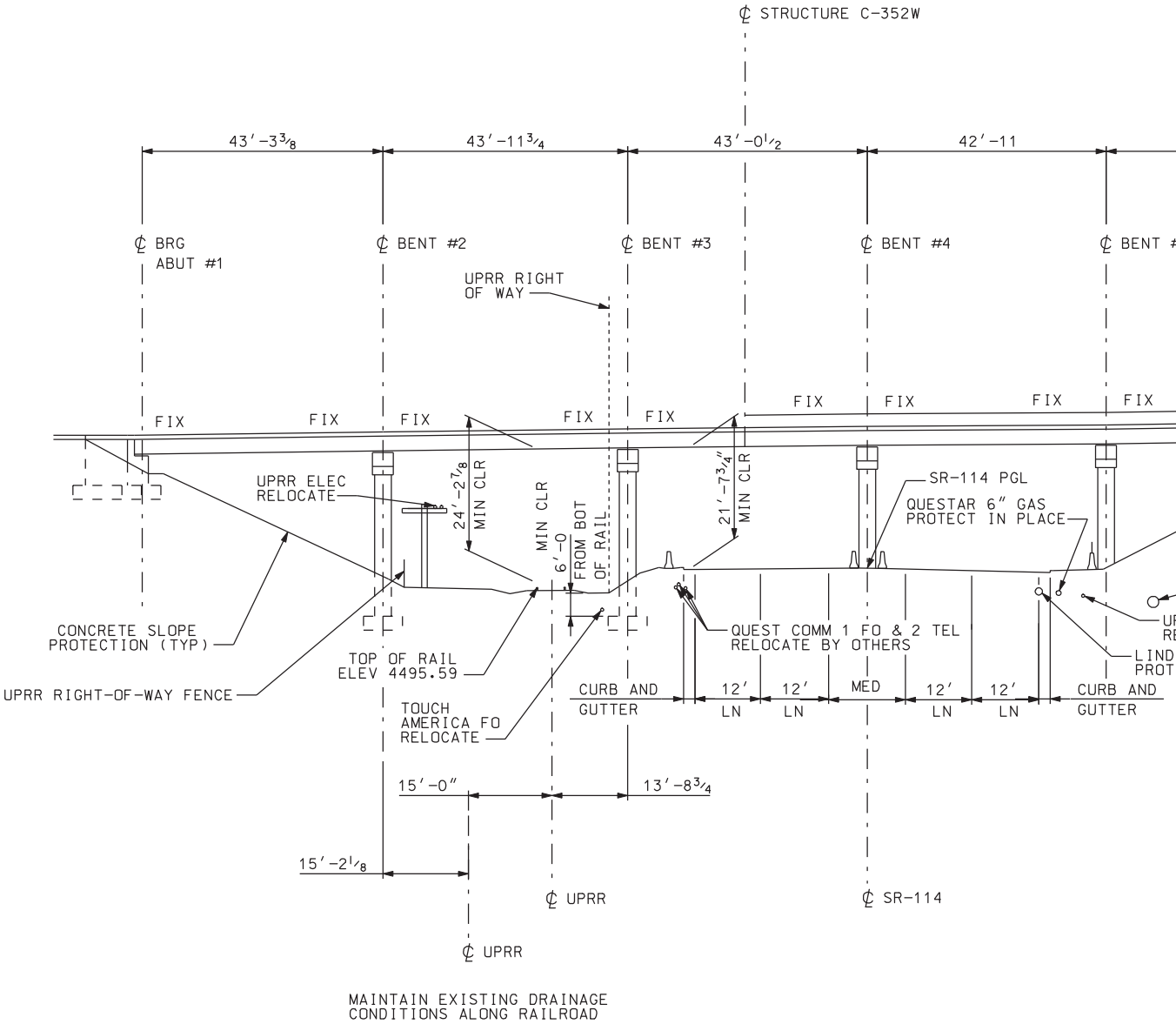


## ELEVATION

NORMAL TO UPRR

DGN File:IP_PWPcdms1717\4433_C-352-03_SL03.dgn

02-MAY-2005

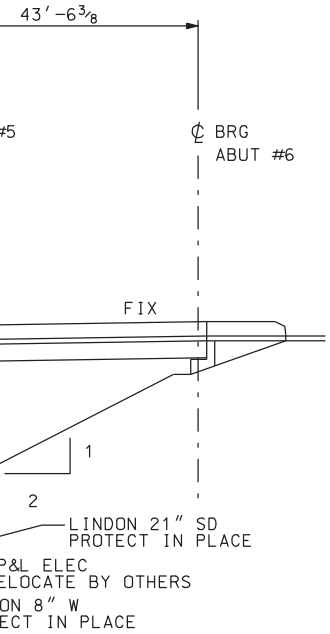


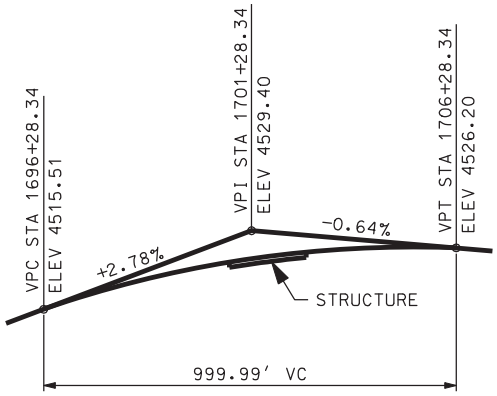


## C-352W PROFILE NB & SB

VALID FOR 200′ FROM EITHER
END OF STRUCTURE

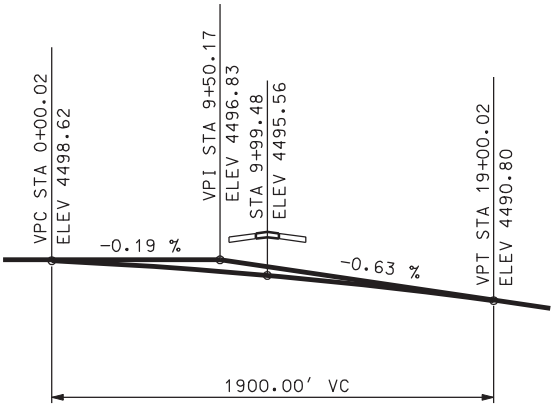


## UPRR PROFILE (EXIST)

VALID FOR 1000′ ON EITHER
SIDE OF STRUCTURE

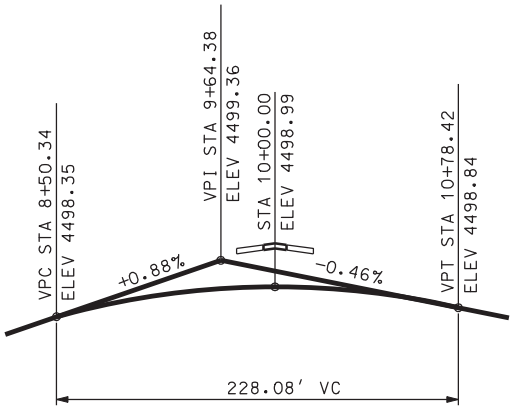


## SR-114 PROFILE (EXIST)

VALID FOR 100′ ON EITHER
SIDE OF STRUCTURE

| NO. | DATE | BY | REMARKS |
|---|---|---|---|

REVISIONS

UTAH DEPARTMENT OF TRANSPORTATION
SALT LAKE CITY, UTAH
STRUCTURES DIVISION
PARSONS

DESIGN STB 12/04 CHECK MBD 01/05
DRAWN TA 12/04 CHECK MBD 01/05
QUANT. STB 12/04 CHECK MBD 01/05

APPROVAL RECOMM. DATE SENIOR DESIGN ENGR.
APPROVED FOR USE BY UDOT DATE UDOT BRIDGE ENGR.

I-15; CORRIDOR IN UTAH COUNTY
I-15 OVER UPRR AND SR-114 IN LINDON
SITUATION & LAYOUT 3

PROJECT NUMBER SP-15-6(52)241

UTAH
COUNTY

C-352W
DRG. NO.

SHT. 3 OF 53

# DRILL HOLE LOG

## BORING NO. 04-1

Sheet: 1 of 1

PROJECT: I-15, CORRIDOR IN UTAH COUNTY - STRUCTURE C352 PROJECT NO.: 200401.045
CLIENT: UTAH DEPARTMENT OF TRANSPORTATION DATE: 8/16/04
LOCATION: SEE SITE PLAN: N 92965, E 208708 ELEVATION: 4498.3'
DRILLER: D. SAMPSON, A. HARTVIGSEN LOGGED BY: M.H., V.N.B.
EQUIP./DRILL METHOD: CME-55 / N.W. CASING
DEPTH TO WATER - INITIAL: ▽ 8.3' AFTER 24 HOURS: ▽ NOT MEASURED

| Elev. (Feet) | Depth (Feet) | Lith-ology | Sample Type | Rec. (In.) | Blows Per 6" & Torvane (tsf) | USCS (AASHTO) | Material Description | | Dry Density, pcf | Moisture Content, % | Atter. Liquid Limit, % | Atter. Plasticity Index, % | Gradation Gravel, % | Gradation Sand, % | Gradation Silt/Clay, % | Other Tests |
|---|---|---|---|---|---|---|---|---|---|---|---|---|---|---|---|---|
| | | | | | | | 9" ASPHALT | | | | | | | | | |
| | | | | 15 | 9,14,24 | CL | brown-gray, moist, stiff | SANDY CLAY W/GRAVEL (fill) | | | | | | | | |
| 4495 | | | | 15 | 9,6,6 0.69 | CL | brown-gray, moist, stiff | | | | | | | | | |
| | 5 | | | 9 | Pushed 0.34 | CL (A-6(8)) | brown, firm | LEAN CLAY | 102.1 | 24.6 | 30 | 12 | 0 | 20 | 80 | CT UC |
| | | | | 6 | 3,3,2 0.24 | ML | dk. gray, moist, soft | SANDY SILT W/SOME CLAY | | | | | | | | |
| 4490 | | | | 8 | Pushed 0.20 | SC | brown, moist, med. dense | CLAYEY SAND (fill) | | | | | | | | |
| | | | | 12 | Pushed | SM | brown | SILTY SAND cemented sand | | | | | | | | |
| | 10 | | | 16 | 8,11,7 | SM (A-2-4) | yellowish-brown, wet, med. dense | SILTY SAND | | 23.2 | | NP | 6 | 67 | 27 | |
| | | | | 13 | Pushed | SM | | | | | | | | | | |
| 4485 | | | | - | 4,5,8 0.75 | SM,CL,ML | brown, wet, med. dense | INTERBEDDED MOSTLY SILTY SAND, CLAY & SILT | | | | | | | | |
| | 15 | | | 18 | Pushed | - | | | | | | | | | | |
| | | | | 13 | 2,3,7 | SM | rusty-brown, very wet, loose | SILTY SAND | | | | | | | | |
| 4480 | | | | | | | | | | | | | | | | |
| | 20 | | | 14 | 7,17,19 | SP-SM (A-3) | brown, wet, dense | POORLY GRADED SAND W/SILT | | 23.0 | | NP | 0 | 89 | 11 | DS |
| 4475 | | | | | | | | | | | | | | | | |
| | 25 | | | 13 | 11,21,19 | SP-SM/SM | brown & rusty-brown, wet, dense | POORLY GRADED SAND W/SILT TO SILTY SAND | | | | | | | | |
| 4470 | | | | | | | | | | | | | | | | |
| | 30 | | | 17 | Pushed 0.32 | SP-SM | brown, wet, med. dense | | | | | | | | | |
| | | | | 10 | 3,2,6 0.45 | CL-ML (A-4(8)) | dk. gray, wet, firm | INTERBEDDED SILTY CLAY W/SILTY SAND LAYERS | | 25.5 | 25 | 5 | 0 | 11 | 89 | |
| 4465 | | | | | | | | | | | | | | | | |
| | 35 | | | 18 | 0.49 | CL-ML | dk. gray, moist, firm | SILTY CLAY | | | | | | | | |
| | | | | | 0/3",11/9",15 | SM | dk. gray, wet, med. dense | SILTY SAND | | | | | | | | |
| 4460 | | | | | | | | | | | | | | | | |
| | 40 | | | 15 | 0.40 3,13,21 | ML (A-4(8)) SM | dk. gray | SILT | | 23.2 | 30 | 7 | 0 | 16 | 84 | |
| | | | | | | | dk. gray, wet, dense | SILTY SAND | | | | | | | | |
| 4455 | | | | | | | | | | | | | | | | |
| | 45 | | | 15 | 3,12,11 0.40 | SM ML | dk. gray | | | | | | | | | |
| | | | | | | | dk. gray, wet, firm | SANDY SILT | | | | | | | | |
| 4450 | | | | | | | | SILTY SAND | | | | | | | | |
| | 50 | | | 18 | Pushed 0.51 | CL | dk. gray, moist to wet, stiff | LEAN CLAY W/SILTY SAND LENSES | | | | | | | | |

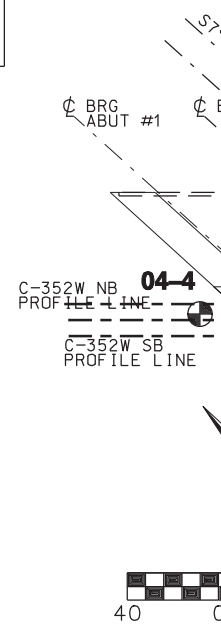


DGN File: IP_PWPcdms1717\4433.C-352-04_SOILDATA01.dgn

02-MAY-2005

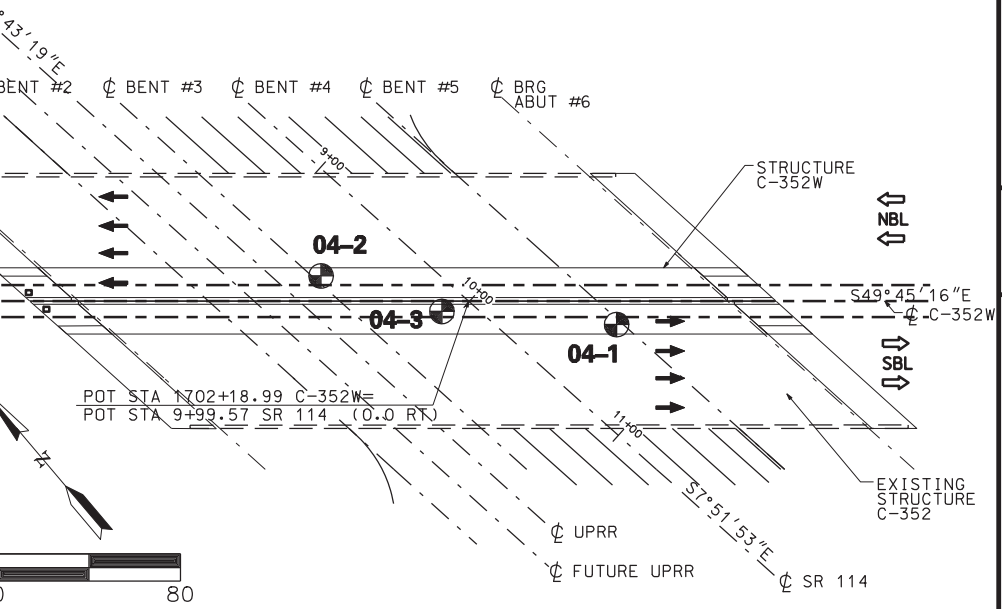


LOCATION PLAN

# KEY TO BORING LOG

## SYMBOLS

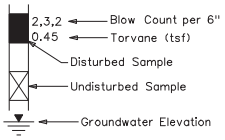


UC = Unconfined Compression Test
CT = Consolidation Test
SG = Specific Gravity Test
DS = Direct Shear Test

## RELATIVE DENSITY (NON-PLASTIC - SAND & SILT)

VERY LOOSE N<4
LOOSE N 4-10
MED DENSE N 10-30
DENSE N 30-50
VERY DENSE N>50

## CONSISTENCY (PLASTIC - SILT & CLAY)

VERY SOFT N<2
SOFT N 2-4
MEDIUM STIFF N 4-8
STIFF N 8-15
VERY STIFF N 15-30
HARD N>30

## GENERAL NOTES

1. THE SUBSURFACE EXPLORATIONS SHOWN WERE CONDUCTED BETWEEN 08-16-04 AND 11-26-04 BY RB&G ENGINEERING, INC..
2. THESE BORING LOGS REPRESENT A SYNOPSIS OF THE SOIL DEPOSITS ENCOUNTERED WITHIN EACH BORING AND ARE BASED ON SOUND GEOLOGICAL AND ENGINEERING JUDGMENT. BECAUSE SOIL IS A COMPLEX MEDIUM, THESE BORING LOGS MAY OR MAY NOT REPRESENT THE SOIL CONDITIONS AT THIS SITE. THIS SUBSURFACE INTERPRETATION IS PRESENTED IN GOOD FAITH AND IS NOT INTENDED AS A SUBSTITUTE FOR PERSONAL INVESTIGATION AND JUDGEMENT OF THE CONTRACTOR.
3. THE WATER LEVELS AND CONDITIONS INDICATED ON THE BORING LOGS REPRESENT HOLE CONDITIONS ON THE DATE SHOWN, HOWEVER, IT SHOULD BE NOTED, THAT AT LOCATIONS AWAY FROM THE BORINGS OR AT ANOTHER TIME THE WATER LEVELS AND CONDITIONS MAY VARY SIGNIFICANTLY.
4. THE STRATIFICATION LINES REPRESENT THE APPROXIMATE BOUNDARIES BETWEEN SOIL TYPES AND THE TRANSITION MAY BE GRADUAL.
5. COBBLE - A ROCK WITH AN AVERAGE DIMENSION BETWEEN 3 INCHES AND 12 INCHES
6. BOULDER - A ROCK WITH AN AVERAGE DIMENSION OF 12 INCHES OR GREATER

NOTE: DRILL RIG USED - CME 55
HAMMER E=0.75

GEOTECHNICAL ENGINEER

| NO. | DATE | BY | REMARKS |
|---|---|---|---|
| | | | |

REVISIONS

UTAH DEPARTMENT OF TRANSPORTATION
SALT LAKE CITY, UTAH
STRUCTURES DIVISION

RB&G ENGINEERING INC.

DESIGN MNH 8/04 CHECK VNB 10/04
DRAWN JPN 10/04 CHECK BEP 10/04
QUANT. CHECK

APPROVAL RECOMM. DATE SENIOR DESIGN ENGR.
APPROVED FOR USE BY UDOT DATE UDOT BRIDGE ENGR.

I-15; CORRIDOR IN UTAH COUNTY
I-15 OVER UPRR AND SR-114 IN LINDON
SOIL DATA SHEET 1

PROJECT NUMBER SP-15-6(52)241

UTAH
COUNTY

C-352W
DRG. NO.

SHT. 4 OF 53

# DRILL HOLE LOG

## BORING NO. 04-2 & 04-2B

Sheet: 1 of 1

PROJECT: I-15, CORRIDOR IN UTAH COUNTY - STRUCTURE C352 PROJECT NO.: 200401.045
CLIENT: UTAH DEPARTMENT OF TRANSPORTATION DATE: 8/16/04 & 11/26/04
LOCATION: SEE SITE PLAN: N 93047, E 208638 ELEVATION: 4498.6'
DRILLER: D. SAMPSON, A. HARTVIGSEN LOGGED BY: G.P., M.H., V.N.B.
EQUIP./DRILL METHOD: CME-55 / N.W. CASING
DEPTH TO WATER - INITIAL: ▽ 9.5' AFTER 24 HOURS: ▽ 10.5' 12/6/04

| Elev. (Feet) | Depth (Feet) | Lithology | Sample Type | Rec. (In.) | Blows Per 6" & Torvane (tsf) | USCS (AASHTO) | Material Description | | Dry Density, pcf | Moisture Content, % | Atter. Liquid Limit, % | Atter. Plasticity Index, % | Gradation Gravel, % | Gradation Sand, % | Gradation Silt/Clay, % | Other Tests |
|---|---|---|---|---|---|---|---|---|---|---|---|---|---|---|---|---|
| | | | | | | | 11" ASPHALT | | | | | | | | | |
| | | | | 10 | 17,24,29 | GP-GM | brown, moist, dense | SILTY GRAVEL W/SAND (fill) | | | | | | | | |
| 4495 | | | | 9 | 19,24,7 | GP-GM | brown, moist, dense | | | | | | | | | |
| | 5 | | | | | CL | dk. gray | SANDY CLAY (fill?) | | | | | | | | |
| | | | | 16 | Pushed 0.85 | CL (A-6(11)) | lt. brown, moist, stiff | LEAN CLAY W/RUSTY SILTY SAND LENSES | 98.9 | 24.3 | 40 | 17 | 0 | 8 | 92 | CT UC |
| 4490 | | | | | | | lt. brown, moist, stiff | | | | | | | | | |
| | 10 | | | 11 | 3,5,8 0.59 | CL SM | lt. brown, wet, med. dense | SILTY SAND | | | | | | | | |
| | | | | 13 | Pushed | CL (A-6(8)) | brown, moist, stiff | LEAN CLAY | 98.5 | 26.8 | 31 | 11 | 0 | 8 | 92 | CT UC |
| 4485 | | | | 15 | 13,13,14 | SM | brown & rusty-brown, some black, wet, med. dense | | | | | | | | | |
| | 15 | | | 13 | 8,8,9 | SM (A-3) | brown & greenish-brown, wet, med. dense, 2" clay layer | SILTY SAND W/SOME SANDSTONE NODULES | | 24.9 | | NP | 0 | 83 | 17 | |
| 4480 | | | | | | | | | | | | | | | | |
| | 20 | | | 14 | 7,13,13 | SP-SM (A-3) | brown, wet, med. dense | POORLY GRADED SAND W/SILT | | 23.8 | | NP | 0 | 92 | 8 | |
| 4475 | | | | | | | | | | | | | | | | |
| | 25 | | | 15 | 7,12,21 | SM | brown, wet, dense | SILTY SAND | | | | | | | | |
| 4470 | | | | | | | | | | | | | | | | |
| | 30 | | | 15 | 8,7,8 | SM | dk. gray, wet, med. dense, 4" silty clay layer | SILTY SAND W/MANY SILTY CLAY TO CLAYEY SILT LENSES & LAYERS TO 0.5" THICK | | | | | | | | |
| 4465 | | | | | | | | | | | | | | | | |
| | 35 | | | 14 | Pushed 0.50 | SM | gray, moist, 3" clay layer | | | | | | | | | |
| 4460 | | | | | | | | SILTY SAND | | | | | | | | |
| | 40 | | | 14 | 2,9,7 | SM | gray, moist, med. dense | | | | | | | | | |
| 4455 | | | | | | | | | | | | | | | | |
| | 45 | | | | | SM | gray, moist | | | | | | | | | |
| | | | | 18 | Pushed | ML (A-4(8)) | gray, moist | SILT W/SAND LENSES | 101.6 | 23.8 | 30 | 6 | 0 | 7 | 93 | UC |
| 4450 | | | | | | | | | | | | | | | | |
| | 50 | | | 18 | 1,3,5 0.45 | CL | gray, wet, firm | LEAN CLAY | | 24.8 | 30 | 9 | | | | |
| 4445 | | | | | | | | | | | | | | | | |
| | 55 | | | 12 | Pushed | SP-SM | gray, wet | POORLY GRADED SAND W/SILT | | | | | | | | |
| | | | | 18 | 2,4,6 | SP-SM | gray, wet, loose | | | | | | | | | |
| 4440 | | | | | | | | | | | | | | | | |
| | 60 | | | - | Pushed | CL (A-6(9)) | gray, wet, soft | LEAN CLAY | 95.4 | 29.1 | 34 | 13 | 0 | 2 | 98 | UC |
| | | | | | | SM | gray, wet | SILTY SAND | | | | | | | | |
| 4435 | | | | | | | | | | | | | | | | |
| | 65 | | | 18 | 0/9",2/3",4 0.52 | CL | gray, moist, firm | LEAN CLAY | | | | | | | | |
| 4430 | | | | | | | | | | | | | | | | |
| | 70 | | | 18 | Pushed | CL-ML (A-4(8)) | gray, moist, firm | CLAYEY SILT | 100.4 | 32.4 | 23 | 6 | 0 | 9 | 91 | UC |
| | | | | | | SM | gray, wet, med. dense | SILTY SAND | | | | | | | | |
| | | | | 18 | 4,7,7 | CL | gray | LEAN CLAY | | | | | | | | |
| | | | | | | SM | gray, wet | SILTY SAND | | | | | | | | |
| 4425 | | | | | | | | | | | | | | | | |
| | 75 | | | | | SM | gray, wet | | | | | | | | | |
| | | | | 18 | Pushed | CL | gray, moist | LEAN CLAY | | | | | | | | |
| | | | | | | SM | gray | | | | | | | | | |
| | | | | 11 | 4,5,4 | SM | gray, wet, loose | | | | | | | | | |

| Elev. (Feet) | Depth (Feet) |
|---|---|
| 4420 | 80 |
| 4415 | 85 |
| 4410 | 90 |
| 4405 | 95 |
| 4400 | 100 |
| 4395 | 105 |
| 4390 | 110 |
| 4385 | 115 |
| 4380 | 120 |
| 4375 | 125 |
| 4370 | 130 |
| 4365 | 135 |
| 4360 | 140 |

DGN File: IP_PWPcdms1717\4433.C-352-05_SOILDATA02.dgn
02-MAY-2005

| | | | | | | | | | | | | | | |
|---|---|---|---|---|---|---|---|---|---|---|---|---|---|---|
| | | | | | SILTY SAND | | | | | | | | | |
| 18 | 3,4,6<br>0.54 | SM<br>CL | gray,<br>wet, loose<br>gray,<br>wet, stiff | | | | | | | | | | | |
| | | | | | LEAN CLAY | | | | | | | | | |
| 9 | Pushed | CL<br>CL | gray, wet, very soft,<br>looks like sluff | | | | | | | | | | | |
| 18 | 2,4,6<br>0.55<br>0.58 | CL | gray,<br>moist, stiff | | | | | | | | | | | |
| 18 | 2,6,6<br>0.45<br>0.54 | CL | gray,<br>moist, firm to stiff | | LEAN CLAY W/SAND LENSES<br>& LAYERS TO 0.75" THICK | | | | | | | | | |
| 16 | Pushed | CL<br>SM | gray,<br>wet, dense | | SILTY SAND | | | | | | | | | |
| 18 | 15,29,16<br>0.52 | SM | | | | | | | | | | | | |
| 18 | Pushed<br>0.74 | CL<br>(A-6(9)) | gray,<br>moist, stiff | | | 95.1 | 29.3 | 35 | 12 | 0 | 0 | 100 | CT<br>UC | |
| 18 | 2,5,7<br>0.69 | CL | gray,<br>moist, stiff | | | | | | | | | | | |
| 18 | Pushed<br>0.50<br>0.55 | CL<br>(A-6(10)) | gray,<br>moist, stiff | | LEAN CLAY W/SILTY<br>SAND LENSES | 87.1 | 36.3 | 40 | 14 | 0 | 0 | 100 | UC | |
| 18 | 0,4,6<br>0.64 | CL | gray,<br>moist, stiff | | | | | | | | | | | |
| 18 | Pushed<br>0.78 | CL<br>(A-6(10)) | gray,<br>moist, stiff | | | 94.1 | 30.6 | 39 | 15 | 0 | 0 | 100 | UC | |
| 16 | 13,17,23 | SM/ML | gray,<br>moist, dense, stiff | | SILTY SAND TO SANDY<br>SILT W/CLAY LENSES | | | | | | | | | |
| 18 | Pushed<br>0.35 | CL<br>(A-7-5(11)) | dk. gray,<br>moist, soft | | LEAN CLAY | 89.1 | 33.8 | 41 | 17 | 0 | 1 | 99 | UC | |
| 18 | 21,24,25 | SM<br>(A-3) | gray,<br>wet, dense | | | | 21.8 | | NP | 0 | 79 | 21 | | |
| | | | | | SILTY SAND | | | | | | | | | |
| 18 | 14,23,27 | SM | gray,<br>wet, dense | | | | | | | | | | | |
| | | | | | INTERBEDDED LAYERS OF CLAY<br>& SAND (DRILLER OBSERVATION) | | | | | | | | | |
| 2 | 61/5",REF | GM | gray, wet, dense | | SILTY GRAVEL W/SAND | | | | | | | | | |

# KEY TO BORING LOG

## SYMBOLS

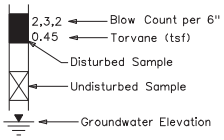


UC = Unconfined Compression Test
CT = Consolidation Test
SG = Specific Gravity Test
DS = Direct Shear Test

## RELATIVE DENSITY (NON-PLASTIC - SAND & SILT)

VERY LOOSE N<4
LOOSE N 4-10
MED DENSE N 10-30
DENSE N 30-50
VERY DENSE N>50

## CONSISTENCY (PLASTIC - SILT & CLAY)

VERY SOFT N<2
SOFT N 2-4
MEDIUM STIFF N 4-8
STIFF N 8-15
VERY STIFF N 15-30
HARD N>30

## GENERAL NOTES

1. THE SUBSURFACE EXPLORATIONS SHOWN WERE CONDUCTED BETWEEN 08-16-04 AND 11-26-04 BY RB&G ENGINEERING, INC..
2. THESE BORING LOGS REPRESENT A SYNOPSIS OF THE SOIL DEPOSITS ENCOUNTERED WITHIN EACH BORING AND ARE BASED ON SOUND GEOLOGICAL AND ENGINEERING JUDGMENT. BECAUSE SOIL IS A COMPLEX MEDIUM, THESE BORING LOGS MAY OR MAY NOT REPRESENT THE SOIL CONDITIONS AT THIS SITE. THIS SUBSURFACE INTERPRETATION IS PRESENTED IN GOOD FAITH AND IS NOT INTENDED AS A SUBSTITUTE FOR PERSONAL INVESTIGATION AND JUDGEMENT OF THE CONTRACTOR.
3. THE WATER LEVELS AND CONDITIONS INDICATED ON THE BORING LOGS REPRESENT HOLE CONDITIONS ON THE DATE SHOWN, HOWEVER, IT SHOULD BE NOTED, THAT AT LOCATIONS AWAY FROM THE BORINGS OR AT ANOTHER TIME THE WATER LEVELS AND CONDITIONS MAY VARY SIGNIFICANTLY.
4. THE STRATIFICATION LINES REPRESENT THE APPROXIMATE BOUNDARIES BETWEEN SOIL TYPES AND THE TRANSITION MAY BE GRADUAL.
5. COBBLE - A ROCK WITH AN AVERAGE DIMENSION BETWEEN 3 INCHES AND 12 INCHES
6. BOULDER - A ROCK WITH AN AVERAGE DIMENSION OF 12 INCHES OR GREATER

NOTE: DRILL RIG USED - CME 55
HAMMER E=0.75

GEOTECHNICAL ENGINEER

| NO. | DATE | BY | REMARKS |
|---|---|---|---|
| | | | |

REVISIONS

UTAH DEPARTMENT OF TRANSPORTATION
SALT LAKE CITY, UTAH
STRUCTURES DIVISION

RB&G ENGINEERING INC.

DESIGN MNH 11/04 CHECK VNB 12/04
DRAWN JPN 12/04 CHECK BEP 12/04
QUANT. CHECK

APPROVAL RECOMM. DATE SENIOR DESIGN ENGR.
APPROVED FOR USE BY UDOT DATE UDOT BRIDGE ENGR.

I-15; CORRIDOR IN UTAH COUNTY
I-15 OVER UPRR AND SR-114 IN LINDON
SOIL DATA SHEET 2

PROJECT NUMBER SP-15-6(52)241

UTAH
COUNTY

C-352W
DRG. NO.

SHT. 5 OF 53

# DRILL HOLE LOG

## BORING NO. 04-3

Sheet: 1 of 1

PROJECT: I-15, CORRIDOR IN UTAH COUNTY - STRUCTURE C352 PROJECT NO.: 200401.045
CLIENT: UTAH DEPARTMENT OF TRANSPORTATION DATE: 8/17/04
LOCATION: SEE SITE PLAN: N 93007, E 208662 ELEVATION: 4498.9'
DRILLER: D. SAMPSON, A. HARTVIGSEN LOGGED BY: M.H., V.N.B.
EQUIP./DRILL METHOD: CME-55 / N.W. CASING
DEPTH TO WATER - INITIAL: ▽ 9.5' AFTER 24 HOURS: ▽ 9.4' 8/25/04

| Elev. (Feet) | Depth (Feet) | Lith-ology | SAMPLE Type | Rec. (In.) | Blows Per 6" & Torvane (tsf) | USCS (AASHTO) | Material Description | Dry Density, pcf | Moisture Content, % | Atter. Liquid Limit, % | Atter. Plasticity Index, % | Gradation Gravel, % | Gradation Sand, % | Gradation Silt/Clay, % | Other Tests |
|---|---|---|---|---|---|---|---|---|---|---|---|---|---|---|---|
| | | | | | | | 9" ASPHALT | | | | | | | | |
| | | | | 16 | 20,20,23 | GP-GM | brown, moist, dense — POORLY GRADED GRAVEL W/SILT & SAND | | | | | | | | |
| 4495 | 5 | | | 6 | 8,13,10 | GC (A-1-b) | dk. gray-brown, wet, med. dense — GRAVEL W/SILTY CLAY MATRIX may have some cobbles | | 13.0 | | NP | 42 | 33 | 25 | |
| | | | | 10 | 6,7,7 0.85 0.25 | CL (A-6(8)) | lt. brown, moist, soft to stiff — LEAN CLAY | | 25.9 | 39 | 16 | 0 | 14 | 86 | |
| 4490 | 10 | | | 15 | 0.82 Pushed | CL | lt. brown, moist, stiff | 103.9 | 23.4 | 34 | 11 | 0 | 1 | 99 | CT UC |
| | | | | 18 | 4,9,13 | SM | brown, wet, med. dense — SILTY FINE TO MED. SAND | | | | | | | | |
| | | | | 12 | 4,2,2 | CL | lt. brown, moist, soft — LEAN CLAY W/SILTY SAND LENSES | | | | | | | | |
| 4485 | 15 | | | 15 | 6,5,10 | SM (A-2-4) | brown, wet, med. dense | | 22.8 | | NP | 1 | 71 | 28 | |
| 4480 | 20 | | | 11 | 7,10,8 | SM | brown & rusty-red-brown, wet, med. dense — SILTY SAND | | | | | | | | |
| 4475 | 25 | | | 12 | 5,13,16 | SM | rusty-brown; dk. gray, wet, med. dense, trace of organics — SILTY FINE SAND | | | | | | | | |
| 4470 | 30 | | | 11 | Pushed | SM | LAYERED SILT & CLAY; dk. gray, wet — SILTY SAND | | | | | | | | |
| | | | | 13 | 4,4,6 | ML,CL-ML | dk. gray, wet, stiff — LAYERS OF SILT & CLAYEY SILT W/CLAY LENSES | | | | | | | | |
| 4465 | 35 | | | 12 | 3,5,9 | CL-ML | dk. gray, wet, stiff — INTERBEDDED SILT & CLAY W/SILTY SAND LAYERS TO 0.5" THICK | | | | | | | | |

# DRILL HOLE

## BORING NO.

Sheet: 1 of 1

| Elev. (Feet) | Depth (Feet) | Lith-ology |
|---|---|---|
| 4520 | 5 | |
| 4515 | 10 | |
| 4510 | 15 | |
| 4505 | 20 | |
| 4500 | 25 | |
| 4495 | 30 | |
| 4490 | 35 | |
| 4485 | 40 | |
| 4480 | 45 | |
| 4475 | 50 | |
| 4470 | 55 | |
| 4465 | 60 | |

DGN File: IP_PWPcdms1717\4433_C-352-06_SOILDATA03.dgn
02-MAY-2005

LOG

04-4

PROJECT: I-15, CORRIDOR IN UTAH COUNTY - STRUCTURE C352 PROJECT NO.: 200401.045
CLIENT: UTAH DEPARTMENT OF TRANSPORTATION DATE: 8/17/04
LOCATION: SEE SITE PLAN: N 93141, E 208505 ELEVATION: 4522.8'
DRILLER: D. SAMPSON, A. HARTVIGSEN LOGGED BY: M.H., V.N.B.
EQUIP./DRILL METHOD: CME-55 / N.W. CASING
DEPTH TO WATER - INITIAL: ▽ 35.5' AFTER 24 HOURS: ▽ NOT MEASURED

| Type | Rec. (in.) | Blows Per 6" & Torvane (tsf) | USCS (AASHTO) | Material Description | | Dry Density, pcf | Moisture Content, % | Atter. Liquid Limit, % | Atter. Plasticity Index, % | Gradation Gravel, % | Gradation Sand, % | Gradation Silt/Clay, % | Other Tests |
|---|---|---|---|---|---|---|---|---|---|---|---|---|---|
| | 16 | 8,15,16 | SM | lt. brown, very dry, dense | SILTY SAND W/GRAVEL & SOME SLAG | | | | | | | | |
| | 12 | 24,22,16 | GP-GM (A-1-a) | brown-gray, dry, dense | POORLY GRADED GRAVEL W/SAND & SILT (SLAG) (fill) | | 11.6 | | NP | 47 | 45 | 8 | |
| | 11 | 37,28,18 | GP-GM | gray, moist, dense | | | | | | | | | |
| | 12 | 22,15,11 | GP-GM | gray, moist, dense | | | | | | | | | |
| | 12 | 22,27,26 | GM (A-2-4) | gray, slightly moist, dense | SILTY GRAVEL W/SAND | | 7.9 | | NP | 37 | 30 | 33 | |
| | 11 | 10,17,16 | GM | gray, slightly moist, dense | | | | | | | | | |
| | 8 | 32,47/3" | SM | brown | SILTY SAND W/SOME GRAVEL | | | | | | | | |
| | 5 | 58/6" | GM | gray, slightly moist, very dense; gray, slightly moist, very dense | SLAG (fill) | | | | | | | | |
| | 14 | 22,14,8 0.53 | CL (A-6(7)) | gray, w/2" silty sand then slag; black, moist, stiff, w/roots | LEAN CLAY | | 20.3 | 33 | 11 | 4 | 24 | 72 | |
| | 13 | Pushed | CL (A-7-5(14) | black to gray, moist, firm | | 101.6 | 25.2 | 44 | 22 | 0 | 3 | 97 | CT |
| | 12 | 5,4,4 0.35 | SM CL | brown, moist, loose; lt. brown, moist, firm | SILTY SAND; LEAN CLAY W/SILTY SAND LENSES | | | | | | | | |
| | 13 | 11,17,12 | SM | lt. brown, wet, med. dense | | | | | | | | | |
| | 13 | 15,26,26 | SM | lt. brown, wet, very dense | SILTY SAND | | | | | | | | |
| | 13 | 15,22,22 | SM | brown, dk. gray, wet, dense | | | | | | | | | |
| | 14 | 6,8,17 0.40 | CL/SM | gray-brown, moist to wet, firm to med. dense | INTERBEDDED CLAY W/SILT & SILTY SAND LAYERS TO 0.5" THICK | | | | | | | | |
| | 17 | 7,4,6 0.43 | CL/SM | gray-brown, moist to wet, firm to loose | | | | | | | | | |

# KEY TO BORING LOG

## SYMBOLS

2,3,2 ← Blow Count per 6"
0.45 ← Torvane (tsf)
Disturbed Sample
Undisturbed Sample
Groundwater Elevation

UC = Unconfined Compression Test
CT = Consolidation Test
SG = Specific Gravity Test
DS = Direct Shear Test

## RELATIVE DENSITY (NON-PLASTIC - SAND & SILT)

VERY LOOSE N<4
LOOSE N 4-10
MED DENSE N 10-30
DENSE N 30-50
VERY DENSE N>50

## CONSISTENCY (PLASTIC - SILT & CLAY)

VERY SOFT N<2
SOFT N 2-4
MEDIUM STIFF N 4-8
STIFF N 8-15
VERY STIFF N 15-30
HARD N>30

## GENERAL NOTES

1. THE SUBSURFACE EXPLORATIONS SHOWN WERE CONDUCTED BETWEEN 08-16-04 AND 11-26-04 BY RB&G ENGINEERING, INC..
2. THESE BORING LOGS REPRESENT A SYNOPSIS OF THE SOIL DEPOSITS ENCOUNTERED WITHIN EACH BORING AND ARE BASED ON SOUND GEOLOGICAL AND ENGINEERING JUDGMENT. BECAUSE SOIL IS A COMPLEX MEDIUM, THESE BORING LOGS MAY OR MAY NOT REPRESENT THE SOIL CONDITIONS AT THIS SITE. THIS SUBSURFACE INTERPRETATION IS PRESENTED IN GOOD FAITH AND IS NOT INTENDED AS A SUBSTITUTE FOR PERSONAL INVESTIGATION AND JUDGEMENT OF THE CONTRACTOR.
3. THE WATER LEVELS AND CONDITIONS INDICATED ON THE BORING LOGS REPRESENT HOLE CONDITIONS ON THE DATE SHOWN, HOWEVER, IT SHOULD BE NOTED, THAT AT LOCATIONS AWAY FROM THE BORINGS OR AT ANOTHER TIME THE WATER LEVELS AND CONDITIONS MAY VARY SIGNIFICANTLY.
4. THE STRATIFICATION LINES REPRESENT THE APPROXIMATE BOUNDARIES BETWEEN SOIL TYPES AND THE TRANSITION MAY BE GRADUAL.
5. COBBLE - A ROCK WITH AN AVERAGE DIMENSION BETWEEN 3 INCHES AND 12 INCHES
6. BOULDER - A ROCK WITH AN AVERAGE DIMENSION OF 12 INCHES OR GREATER

NOTE: DRILL RIG USED - CME 55 HAMMER E=0.75

GEOTECHNICAL ENGINEER

| NO. | DATE | BY | REMARKS |
|---|---|---|---|
| | | | |

REVISIONS

UTAH DEPARTMENT OF TRANSPORTATION
SALT LAKE CITY, UTAH
STRUCTURES DIVISION

RB&G ENGINEERING INC.

DESIGN MNH 8/04 CHECK VNB 10/04
DRAWN JPN 10/04 CHECK BEP 10/04
QUANT. CHECK

APPROVAL RECOMM. DATE SENIOR DESIGN ENGR.
APPROVED FOR USE BY UDOT DATE UDOT BRIDGE ENGR.

I-15; CORRIDOR IN UTAH COUNTY
I-15 OVER UPRR AND SR-114 IN LINDON
SOIL DATA SHEET 3
PROJECT NUMBER SP-15-6(52)241

UTAH
COUNTY

C-352W
DRG. NO.

SHT. 6 OF 53

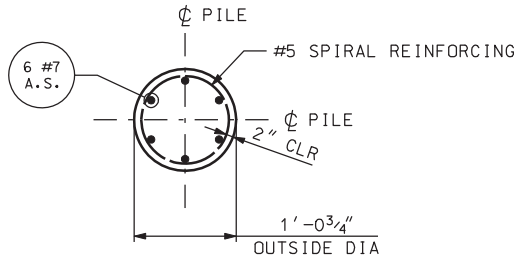


## SECTION A-A

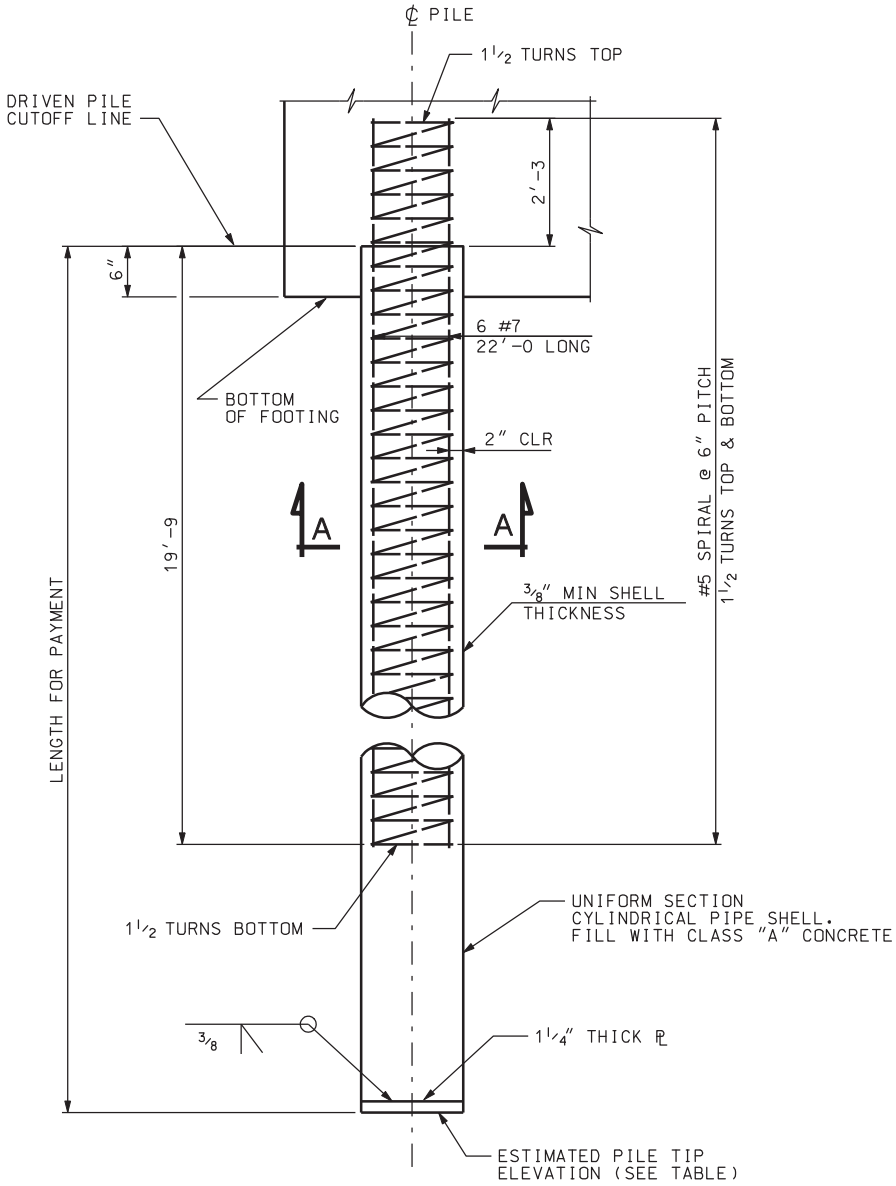


## ELEVATION

| PILE | | | |
|---|---|---|---|
| LOCATION | ESTIMATED PILE TIP ELEV (FEET) | ELEV OF MIN ACCEPTABLE PILE PENETRATION (FEET) | PREBORE ELEVATIO IF REQUIR (FEET) |
| BENT #2 | 4362.500 | 4362.500 | 4454.00 |
| BENT #3 | 4362.500 | 4362.500 | 4454.00 |
| BENT #4 | 4362.500 | 4362.500 | 4454.00 |
| BENT #5 | 4362.500 | 4362.500 | 4454.00 |

NOTE: SERVICE I PILE RESISTANCE WAS DETERMINED ASSUMING TO

DGN File:IP_PWPcdms1717\4433_C-352-07_PILE01.dgn
02-MAY-2005

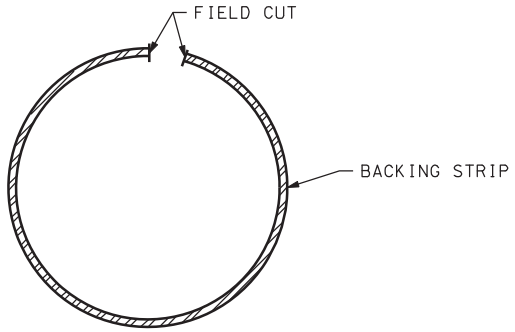


## NOTE

FIELD CUT PIECE OF PILE SO WHEN COMPRESSED IT WILL SLIDE INSIDE PILE SECTIONS.

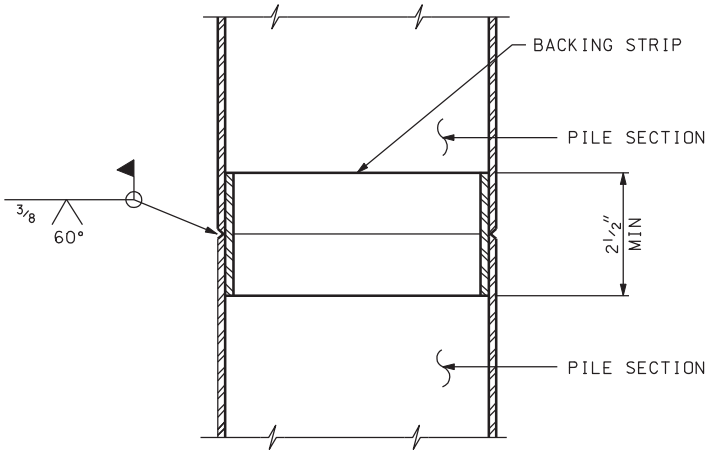


## SPLICE DETAIL

USE FULL STRENGTH WELDED SPLICES.

## NOTES

1. FILL PILE SHELLS WITH CLASS "A" CONCRETE.
2. HOLD REINFORCING STEEL ADEQUATELY IN FINAL POSITION DURING PLACEMENT OF CONCRETE AROUND BARS.
3. USE PILES MEETING ASTM A252 GRADE 3 WITH A MINIMUM YIELD STRENGTH OF 45 KSI.
4. PILE TIP ELEVATIONS ARE APPROXIMATE. VERIFY THESE ELEVATIONS AT THE TIME OF CONSTRUCTION IN ACCORDANCE WITH THE SPECIFICATIONS.
5. USE UNCOATED REINFORCEMENT FOR PILE EMBEDDED REINFORCEMENT.
6. MONITOR PILE DRIVING SETTLEMENT AND PREBORE PILES IF REQUIRED IN ACCORDANCE WITH SPECIAL PROVISION 02455S2.
7. USE A MINIMUM RATED HAMMER ENERGY OF 50 KIP-FT.

E DATA

| E ON RED | SERVICE I PILE RESISTANCE (Kips) | STRENGTH I PILE RESISTANCE (Kips) | REQUIRED DRIVING RESISTANCE (Kips) | AS CONST. PILE TIP ELEV (FEET) |
|---|---|---|---|---|
| 0 | 310 | 202 | 370 | |
| 0 | 310 | 202 | 370 | |
| 0 | 310 | 202 | 370 | |
| 0 | 310 | 202 | 370 | |

LERABLE SETTLEMENT OF 1 INCH.

| NO. | DATE | BY | REMARKS |
|---|---|---|---|
| | | | |

REVISIONS

UTAH DEPARTMENT OF TRANSPORTATION
SALT LAKE CITY, UTAH
STRUCTURES DIVISION
PARSONS

DESIGN HM 12/04 CHECK MB 01/05
DRAWN TA 12/04 CHECK MB 01/05
QUANT. STB 12/04 CHECK MB 01/05

APPROVAL RECOMM. DATE SENIOR DESIGN ENGR.
APPROVED FOR USE BY UDOT DATE UDOT BRIDGE ENGR.

I-15; CORRIDOR IN UTAH COUNTY
I-15 OVER UPRR AND SR-114 IN LINDON
DRIVEN PILE DETAILS

PROJECT NUMBER SP-15-6(52)241

UTAH
COUNTY

C-352W
DRG. NO.

SHT. 7 OF 53

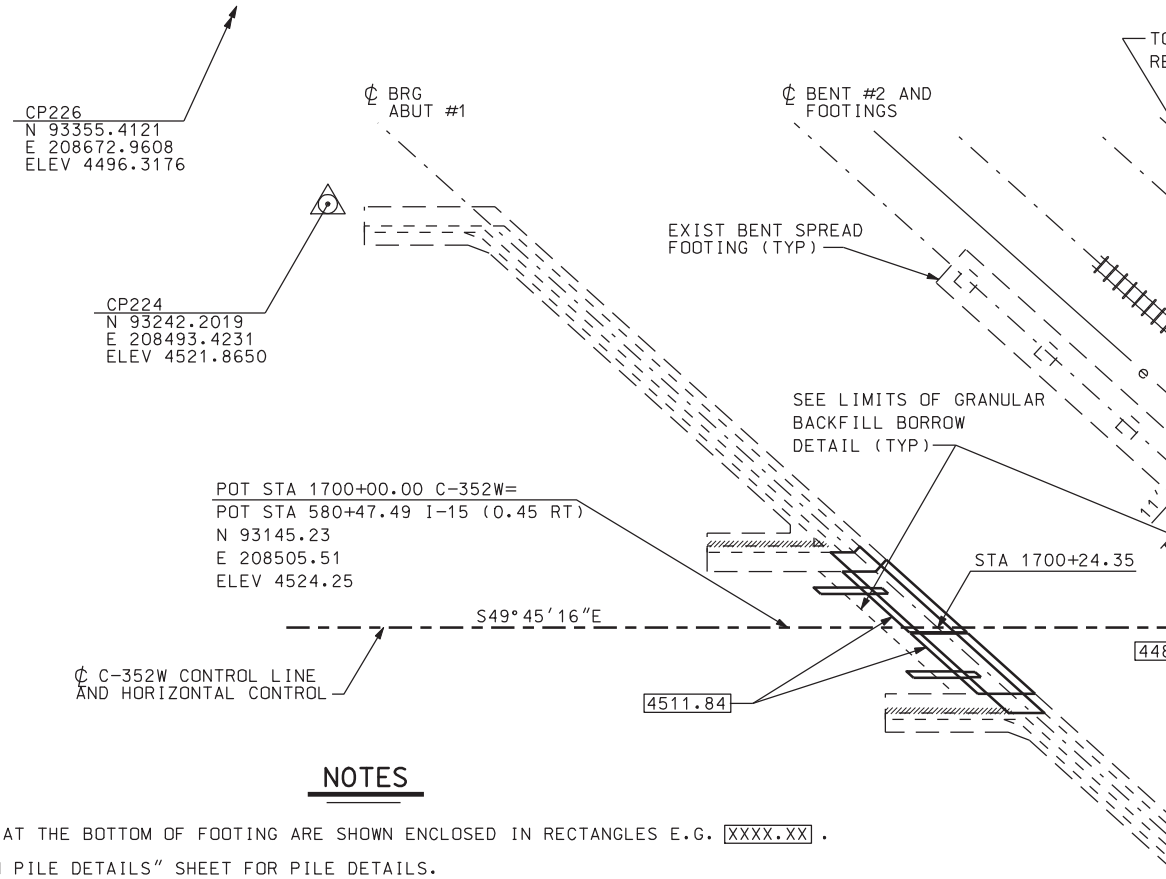


## NOTES

1. ELEVATIONS AT THE BOTTOM OF FOOTING ARE SHOWN ENCLOSED IN RECTANGLES E.G. XXXX.XX .
2. SEE "DRIVEN PILE DETAILS" SHEET FOR PILE DETAILS.
3. LOCATE ℄ NEW COLUMNS AS AN EXTENSION OF THE BEARING ALONG ℄ EXISTING COLUMNS.
4. ALIGN FRONT FACE OF ABUTMENT WALL WITH FRONT FACE OF EXISTING ABUTMENT WALL.
5. GRANULAR BACKFILL BORROW HEIGHT IS COMPUTED FROM THE BOTTOM OF THE ABUTMENT TO THE BOTTOM OF THE APPROACH SLAB.
6. PROVIDE A MINIMUM SOIL COVER OF 2'-0 FOR BENTS 4 AND 5. SEE "SITUATION AND LAYOUT 3" ELEVATION FOR MINIMUM SOIL COVER FOR BENTS 2 AND 3.
7. FIELD VERIFY NORTHING AND EASTING OF ALL CONTROL POINTS AS WELL AS THE RELATIVE ELEVATION DIFFERENCES BETWEEN ALL CONTROL POINTS. IF THE NORTHING, EASTING, OR RELATIVE ELEVATION DIFFERENCES VARY BY MORE THAN ± 1" FROM WHAT IS GIVEN ON THE SHEET, REPORT DISCREPANCIES TO THE ENGINEER AND STOP ALL CONSTRUCTION UNTIL DISCREPANCIES ARE RESOLVED.
8. BOTTOM OF FOOTING ELEVATIONS SHOWN AT ABUTMENTS ARE SHOWN AS REFERENCE. MATCH BOTTOM OF NEW ABUTMENT FOOTING WITH EXISTING.
9. UTILITIES DESIGNATED AS "RELOCATE" ARE THE DESIGN-BUILD RESPONSIBILITY OF THE CONTRACTOR. REFER TO UTILITY RELOCATION (DESIGN-BUILD) SPECIFICATION 000728S.
10. SEE UT-9 FOR UTILITIES DATA NOT SHOWN.
11. FOR SPREAD FOOTING PLACED ON EXISTING SUBGRADE MATERIAL, SCARIFY THE UPPER 10 INCHES BELOW THE FOOTING ELEVATION, MOISTURE CONDITION, AND RECOMPACT TO AT LEAST 96% OF THE MAXIMUM LABORATORY DENSITY AS REQUIRED BY UDOT STANDARD SPECIFICATION 02324.
12. USE BRACED ELEVATION WALL SYSTEM ADJACENT TO EXISTING BENTS WHERE SLOPES STEEPER THAN 1H:1V ARE NECESSARY. DO NOT USE BRACING OR WALLS THAT REQUIRE DRIVING, VIBRATION, OR OTHER ACTIONS THAT MAY DISTURB OR UNDERMINE EXISTING FOOTINGS.
13. PROVIDE BRACED EXCAVATION AT TOE OF ABUTMENT FILL AS NECESSARY DURING CONSTRUCTION.

EXIST ABUTMENT
SPREAD FOOTING

℄ C-352W

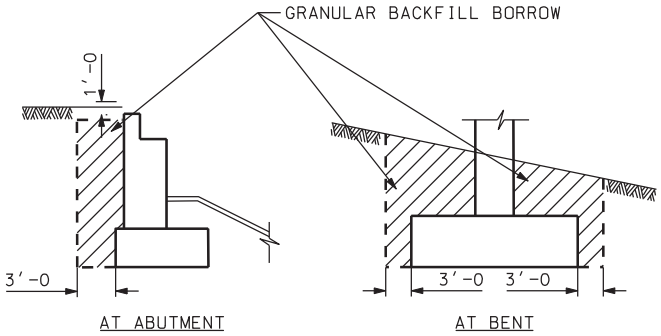


## LIMITS OF GRANULAR BACKFILL BORROW DETAIL

DGN File:IP_PWPcdms1717\4433_C-352-08_FOUND01.dgn
02-MAY-2005

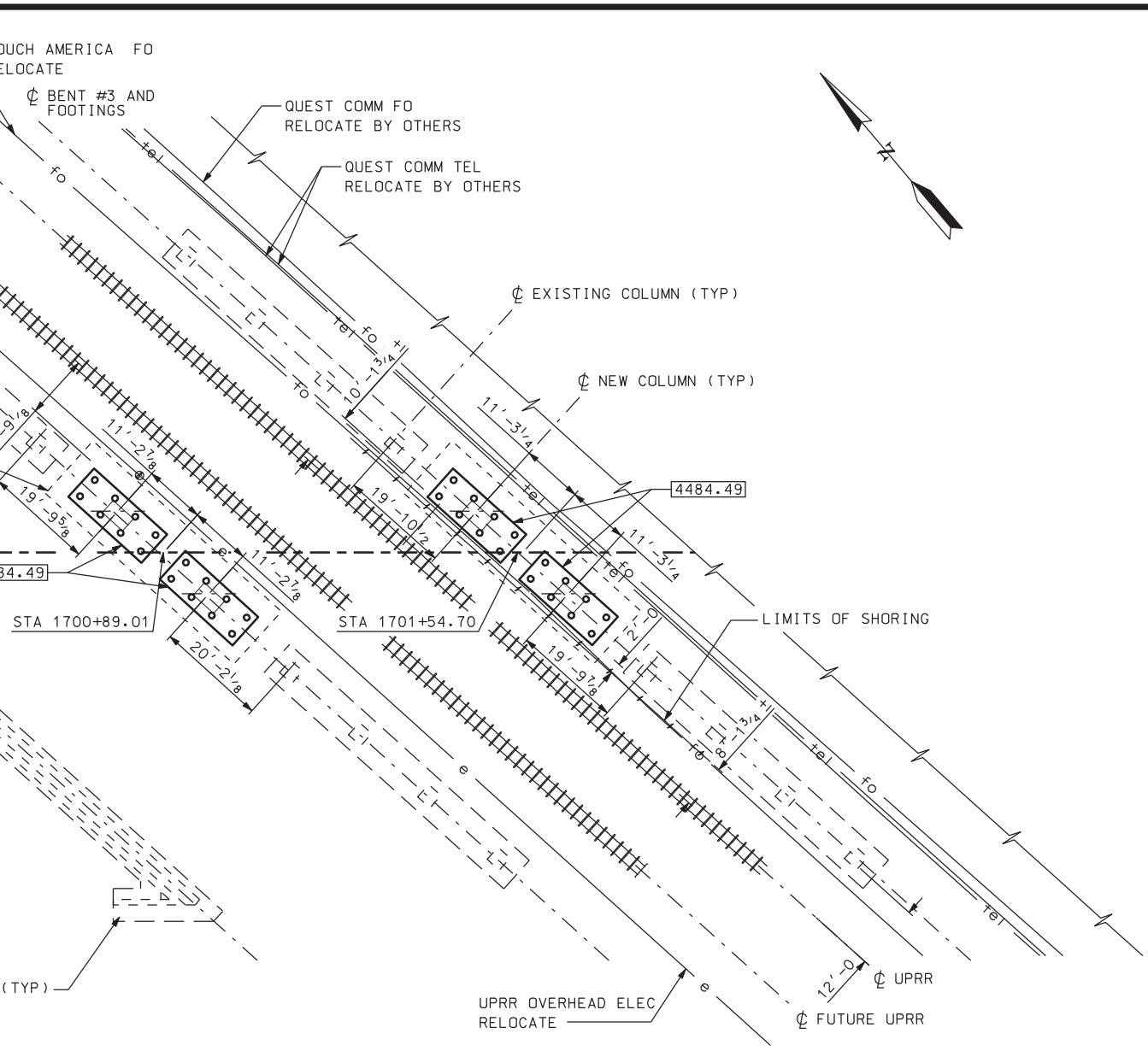


## FOUNDATION PLAN

CP225
N 92722.1506
E 208675.0747
ELEV 4498.2541

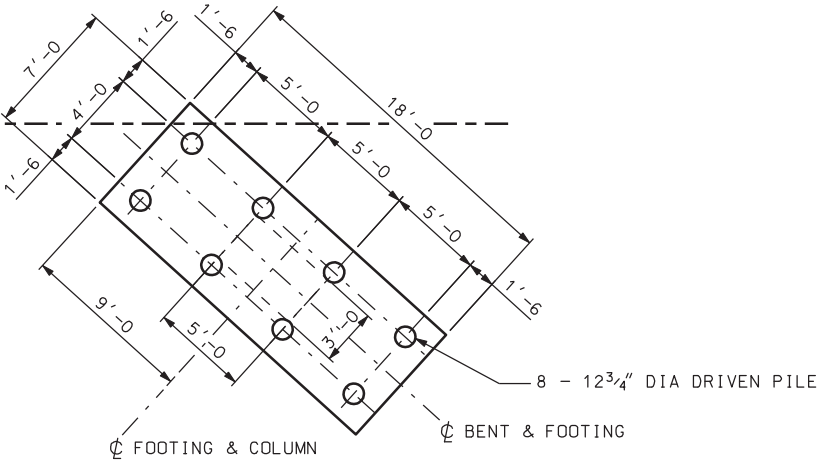


## PILE LAYOUT

| QUANTITIES<br>GRANULAR BACKFILL BORROW | |
|---|---|
| ABUTMENT 1 NB & SB | 48.6 CY |
| BENT 2 NB & SB | 194.0 CY |
| BENT 3 NB & SB | 194.0 CY |
| BENT 4 NB & SB | 131.2 CY |
| BENT 5 NB & SB | 126.6 CY |
| ABUTMENT 6 NB & SB | 51.9 CY |
| TOTAL | 746.3 CY |

| NO. | DATE | BY | REMARKS |
|---|---|---|---|
| | | | |

REVISIONS

UTAH DEPARTMENT OF TRANSPORTATION
SALT LAKE CITY, UTAH
STRUCTURES DIVISION
PARSONS

DESIGN HM 12/04 CHECK MDB 01/05
DRAWN TA 12/04 CHECK MDB 01/05
QUANT. STB 12/04 CHECK MB 01/05

APPROVAL RECOMM. DATE SENIOR DESIGN ENGR.
APPROVED FOR USE BY UDOT DATE UDOT BRIDGE ENGR.

I-15; CORRIDOR IN UTAH COUNTY
I-15 OVER UPRR AND SR-114 IN LINDON
FOUNDATION PLAN 1

PROJECT NUMBER SP-15-6(52)241

UTAH
COUNTY

C-352W
DRG. NO.

SHT. 8 OF 53

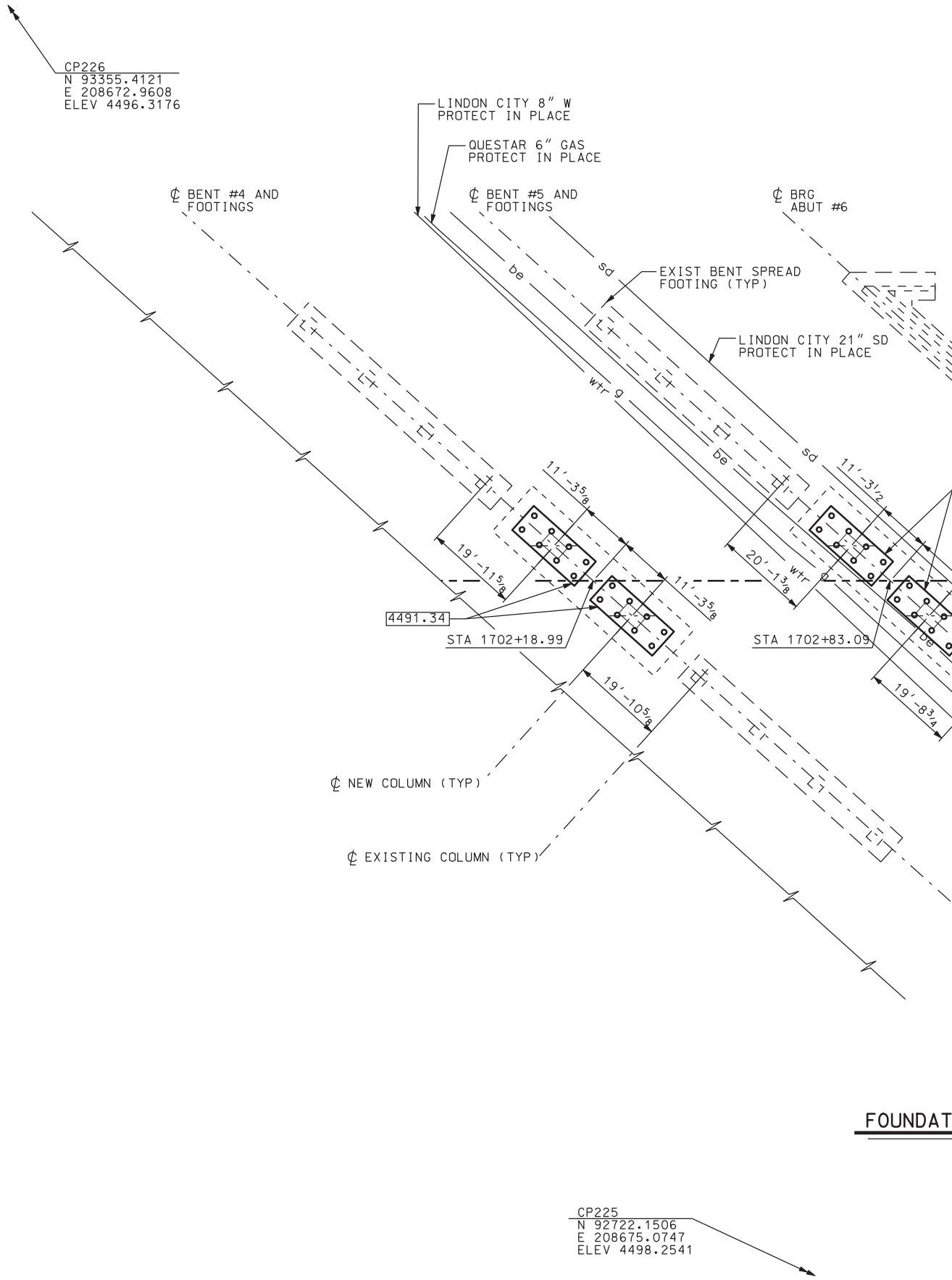


FOUNDAT

DGN File:IP_PWPcdnsl717\4433.C-352-09_FOUND02.dgn

02-MAY-2005

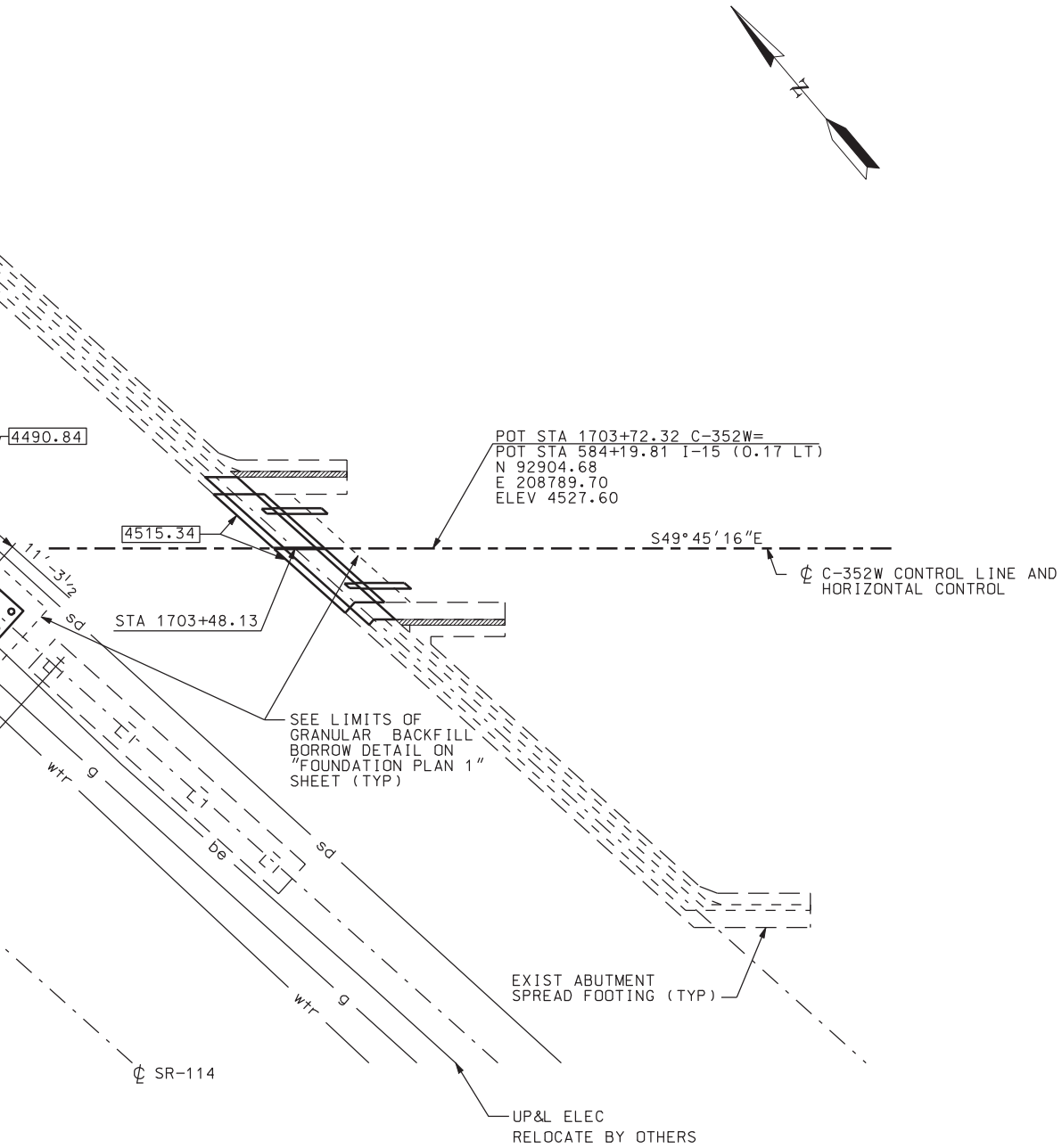


ION PLAN

## NOTE

SEE NOTES ON "FOUNDATION PLAN 1" SHEET.

| NO. | DATE | BY | REMARKS |
|---|---|---|---|

REVISIONS

UTAH DEPARTMENT OF TRANSPORTATION
SALT LAKE CITY, UTAH
STRUCTURES DIVISION
PARSONS

DESIGN HM 12/04 CHECK MBD 01/05
DRAWN TA 12/04 CHECK MBD 01/05
QUANT. STB 12/04 CHECK MBD 01/05

APPROVAL RECOMM. DATE SENIOR DESIGN ENGR.
APPROVED FOR USE BY UDOT DATE UDOT BRIDGE ENGR.

I-15; CORRIDOR IN UTAH COUNTY
I-15 OVER UPRR AND SR-114 IN LINDON
FOUNDATION PLAN 2

PROJECT NUMBER SP-15-6(52)241

UTAH
COUNTY

C-352W
DRG. NO.

SHT. 9 OF 53

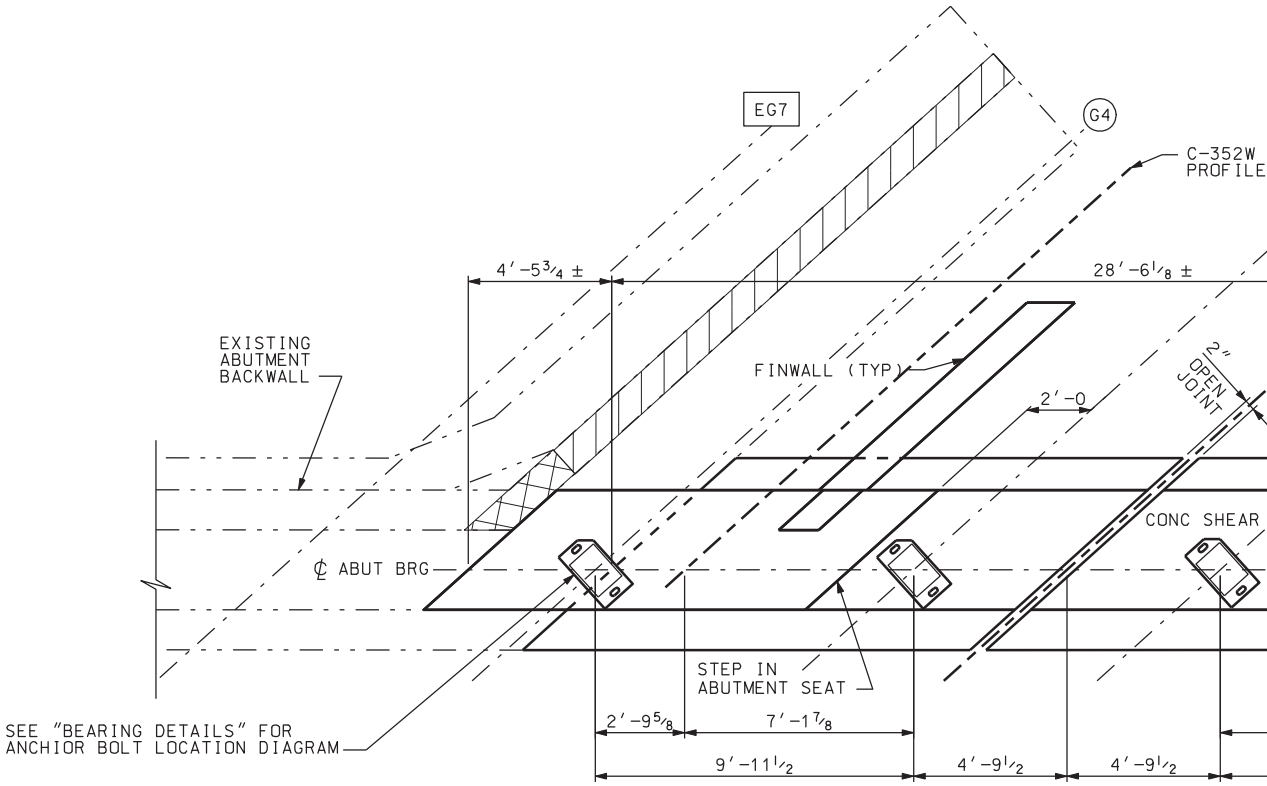


PLAN - ABUTMENT

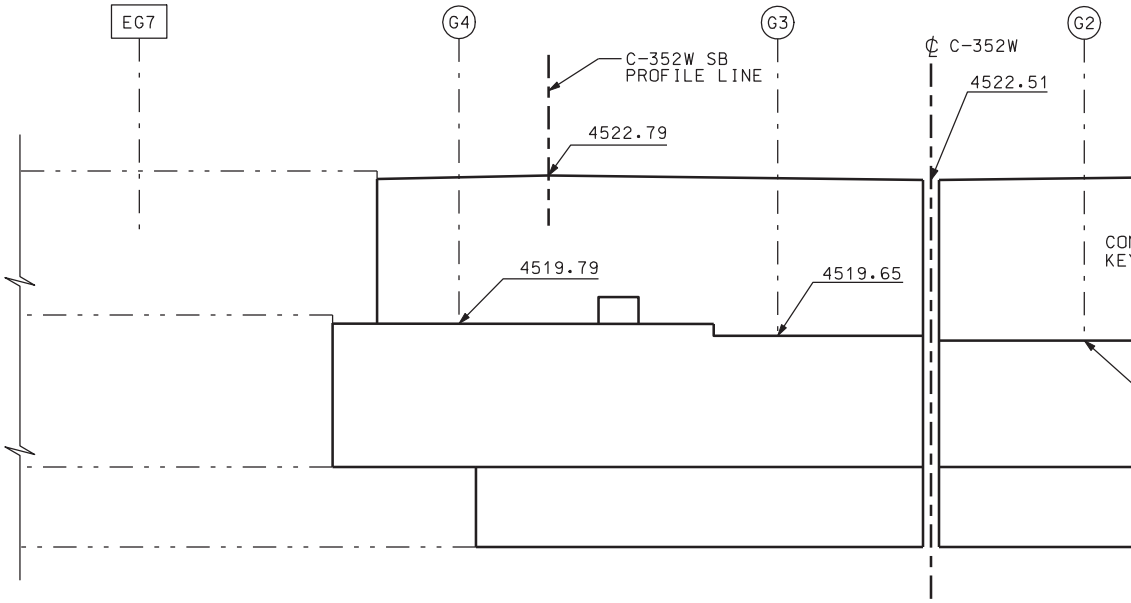


ELEVATION - ABUTMENT I

DGN File:IP_PWPcdms1717\4433_C-352-10_ABUT01.dgn
02-MAY-2005

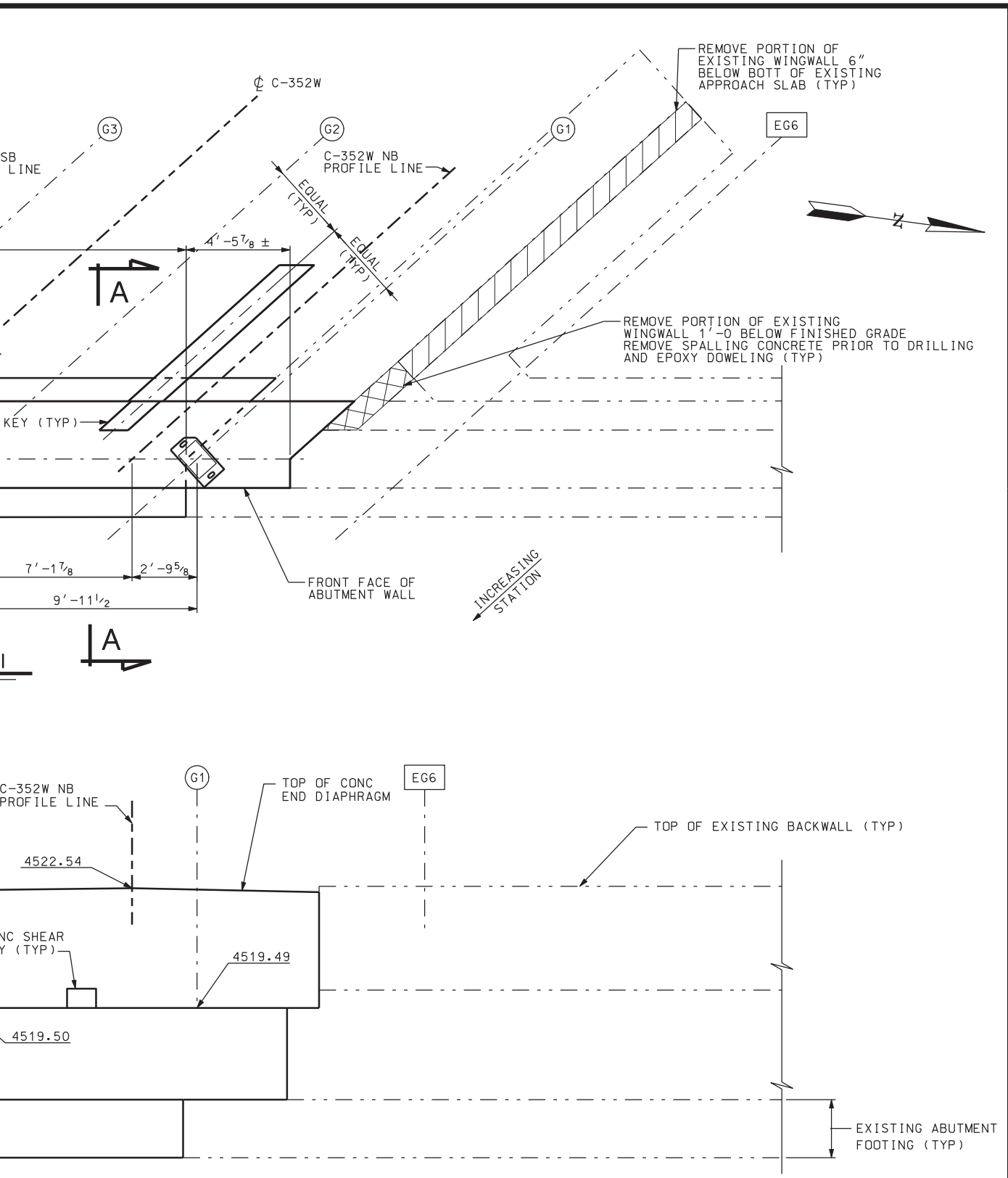


## NOTES

1. ELEVATIONS SHOWN ARE AT ℄ ABUT BRG.
2. MATCH EXISTING BOTTOM OF FOOTING ELEVATIONS.
3. FOR BEARING AND ANCHOR BOLT DETAILS, SEE "BEARING DETAILS" SHEET.
4. PROVIDE BEARING PEDESTAL 1′-2 X 1′-8 AT EACH BEARING LOCATION. FINISH THE PEDESTAL HIGH. RUB OR GRIND THE PEDESTAL SMOOTH AND LEVEL TO THE SPECIFIED ELEVATION.
5. FOR EXISTING WINGWALL REMOVAL, SEE "ABUTMENT DETAILS 1" SHEET.
6. FOR SECTION A-A, CONTRACTION JOINT DETAIL, AND EXISTING ABUTMENT DOWEL DETAIL, SEE "ABUTMENT DETAILS 1" SHEET.
7. FOR FINWALL DETAILS, SEE "ABUTMENT DETAILS 3" SHEET.
8. FOR SHEAR KEYS AND STEEL BOLSTERS, SEE "ABUTMENT DETAILS 4" SHEET THROUGH "ABUTMENT DETAILS 6" SHEET.

| QUANTITIES | |
|---|---|
| STRUCTURAL CONCRETE | |
| NB & SB ABUTMENT 1 | 52.7 CY |

| NO. | DATE | BY | REMARKS |
|---|---|---|---|
| | | | |

REVISIONS

UTAH DEPARTMENT OF TRANSPORTATION
SALT LAKE CITY, UTAH
STRUCTURES DIVISION
PARSONS

DESIGN HM 12/04 CHECK MBD 01/05
DRAWN TA 12/04 CHECK MBD 01/05
QUANT. STB 12/04 CHECK MB 01/05

APPROVAL RECOMM. DATE SENIOR DESIGN ENGR.
APPROVED FOR USE BY UDOT DATE UDOT BRIDGE ENGR.

I-15; CORRIDOR IN UTAH COUNTY
I-15 OVER UPRR AND SR-114 IN LINDON
ABUTMENT PLAN & ELEVATION 1

PROJECT NUMBER SP-15-6(52)241

UTAH
COUNTY

C-352W
DRG. NO.

SHT. 10 OF 53

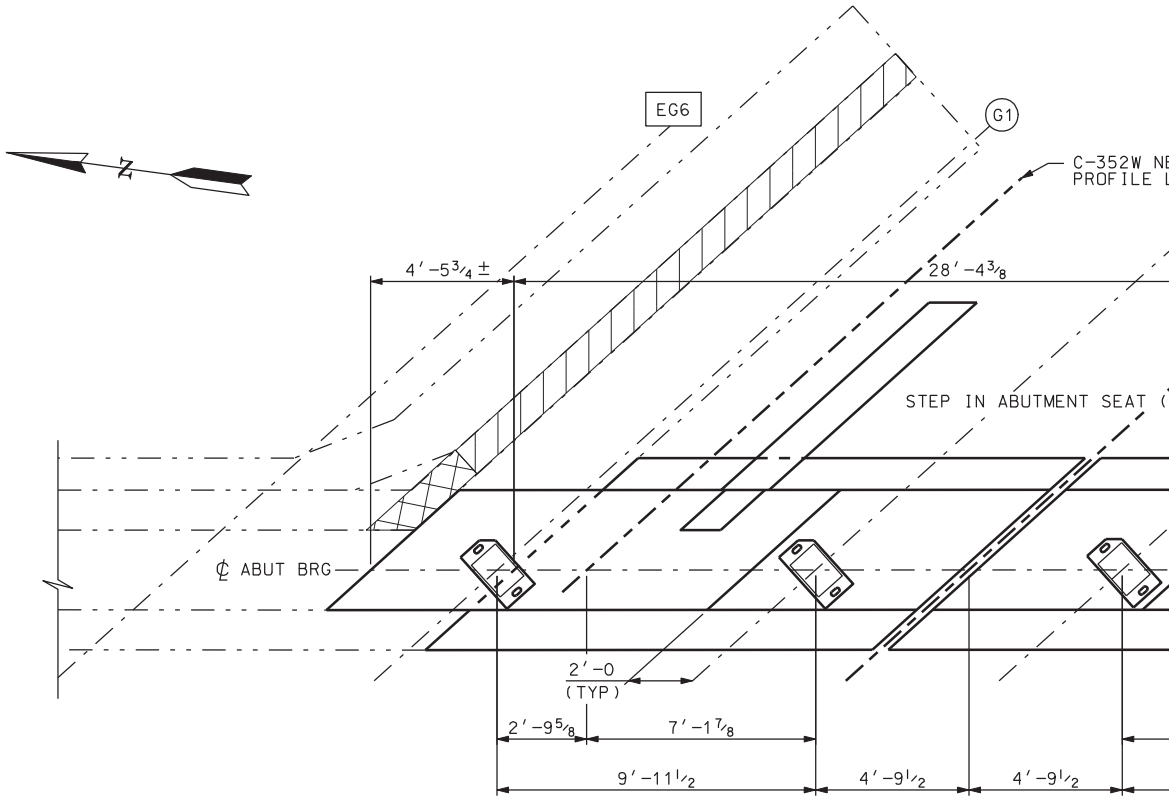


PLAN - ABUTMENT

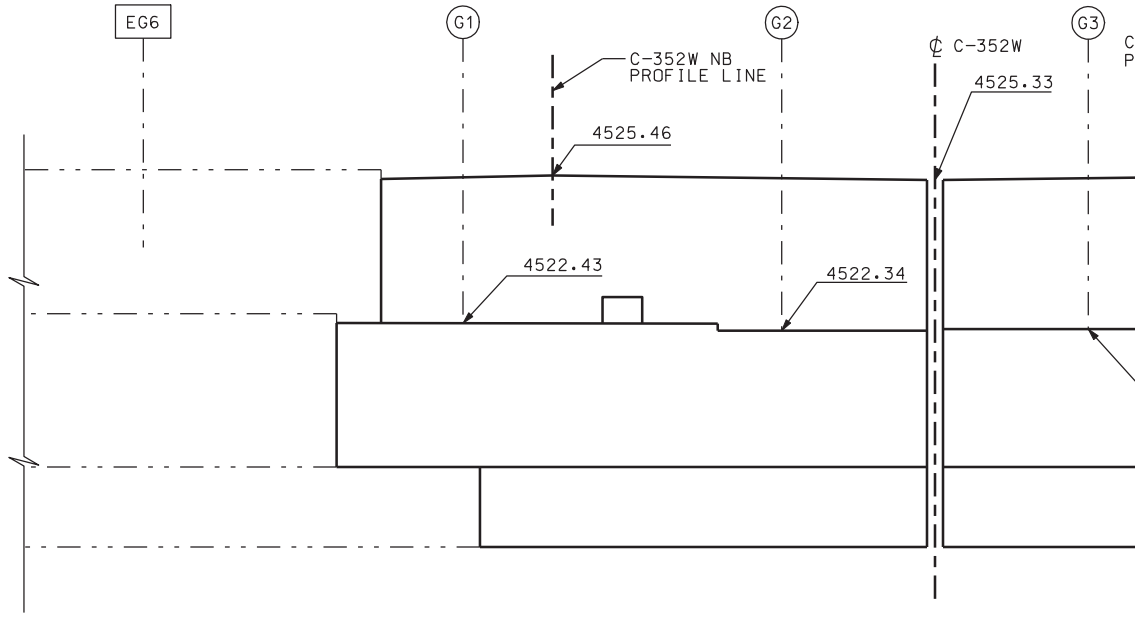


ELEVATION - ABUTMENT 6

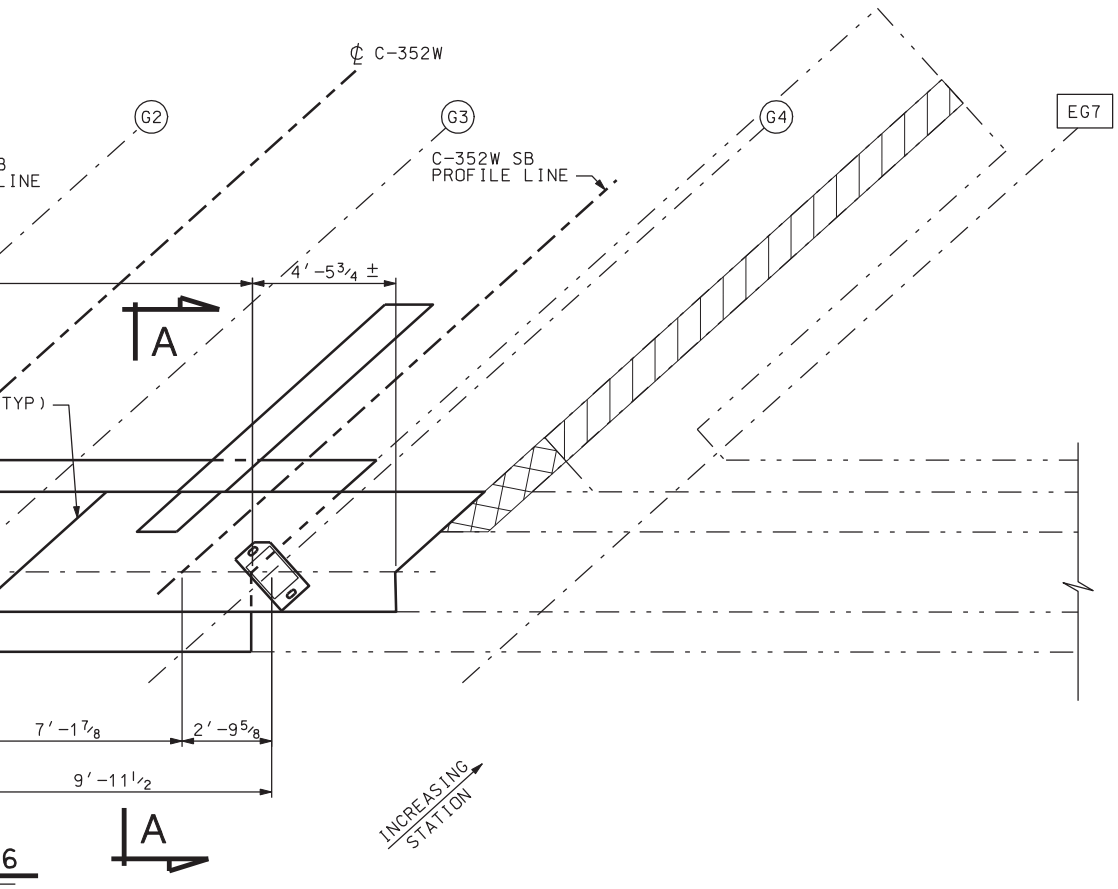


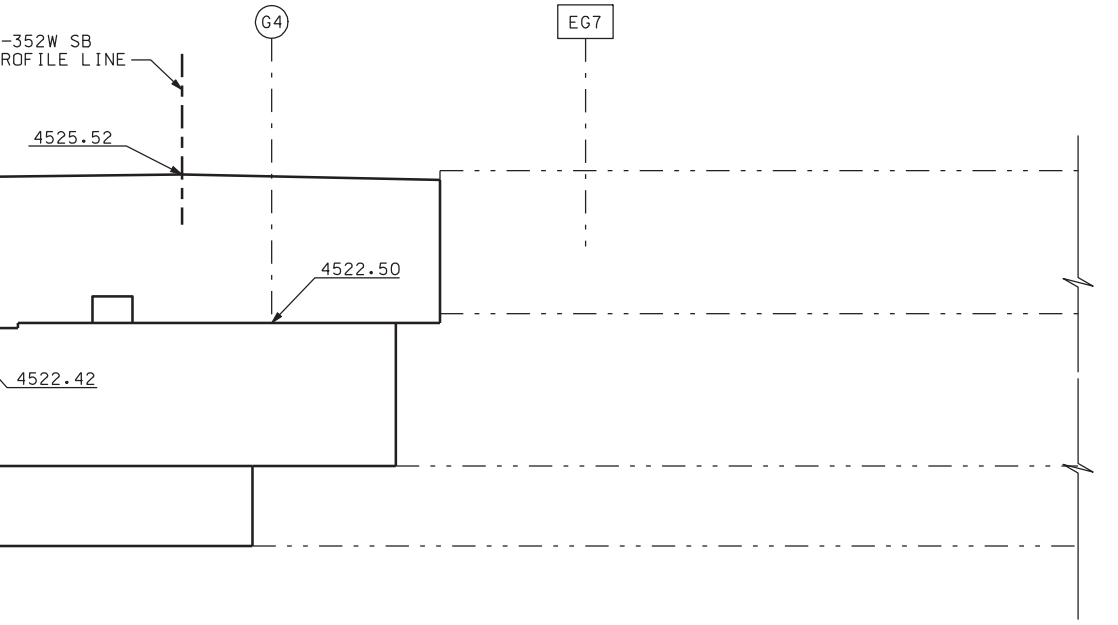


## NOTE

FOR NOTES AND INFORMATION NOT SHOWN,
SEE "ABUTMENT PLAN & ELEVATION 1′ SHEET.

| QUANTITIES STRUCTURAL CONCRETE | |
|---|---|
| NB & SB ABUTMENT 6 | 49.1 CY |

| NO. | DATE | BY | REMARKS |
|---|---|---|---|
| | | | |

REVISIONS

UTAH DEPARTMENT OF TRANSPORTATION
SALT LAKE CITY, UTAH
STRUCTURES DIVISION
PARSONS

DESIGN HM 12/04 CHECK MBD 01/05
DRAWN TA 12/04 CHECK MBD 01/05
QUANT. STB 12/04 CHECK MB 01/05

APPROVAL RECOMM. DATE SENIOR DESIGN ENGR.
APPROVED FOR USE BY UDOT DATE UDOT BRIDGE ENGR.

I-15; CORRIDOR IN UTAH COUNTY
I-15 OVER UPRR AND SR-114 IN LINDON
ABUTMENT PLAN & ELEVATION 2

PROJECT NUMBER SP-15-6(52)241

UTAH
COUNTY

C-352W
DRG. NO.

SHT. 11 OF 53

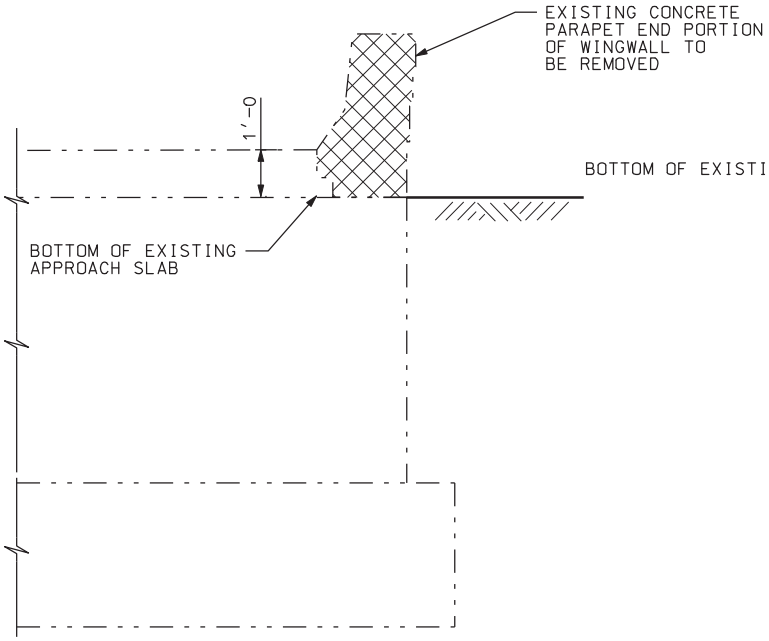


SECTION AT BACKWALL

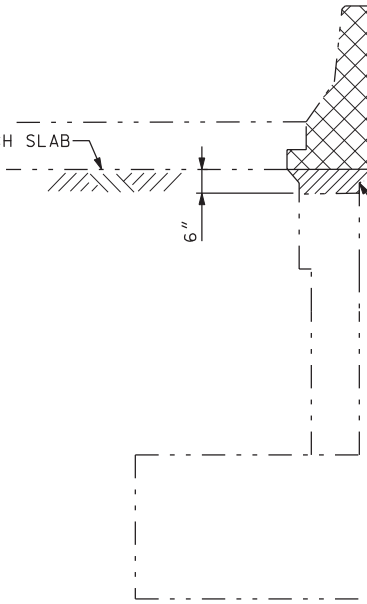


SECTION BEHIND BAC

## WINGWALL REMOVAL DETAILS

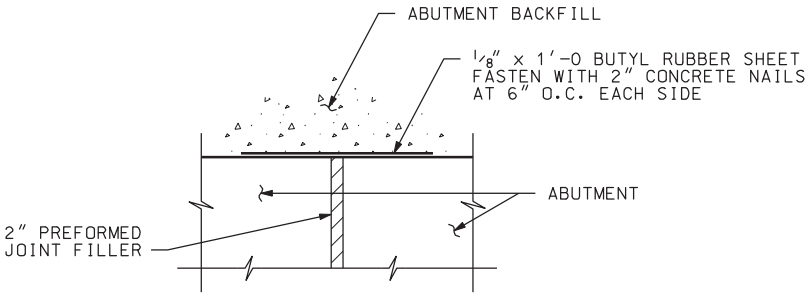


## CONTRACTION JOINT DETAIL

USE RUBBER SHEET ON FACES OF
JOINT IN CONTACT WITH SOIL

DGN File:IP_PWPcdnsl717\4433_C-352-12_ABUTDT01.dgn
02-MAY-2005

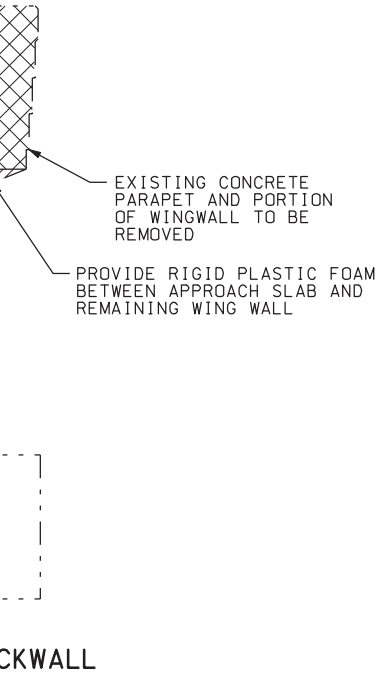


## NOTES

1. DO NOT CUT EXISTING ABUTMENT REINF.
2. DOWEL LOCATIONS MAY BE ADJUSTED 2″ MAX.
3. REMOVE UNSOUND AND SPALLED CONCRETE TO DEPTH APPROVED BY ENGINEER.

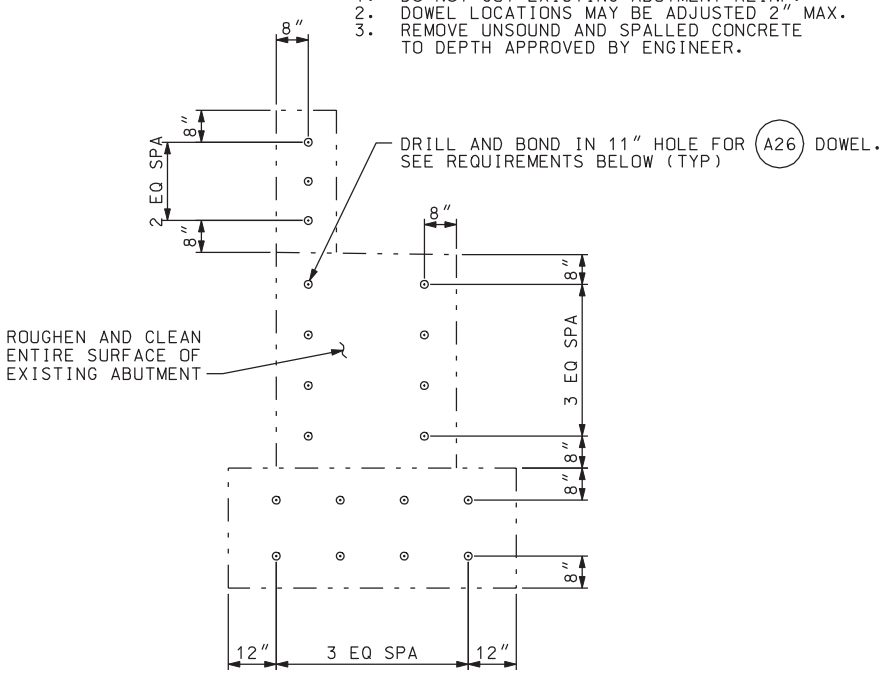


## EXISTING ABUTMENT DOWEL DETAIL

| BAR DIAMETER | MINIMUM PULL-OUT STRENGTH (KIPS) |
|---|---|
| #5 | 18.4 |
| #8 | 47.1 |

USE APPROVED EPOXY ANCHORAGE TO DEVELOP THE MINIMUM SPECIFIED PULLOUT STRENGTH. DRILLING AND PREPARATION FOR ANCHORAGE OF REINFORCEMENT AND CONCRETE REMOVAL ARE INCIDENTAL TO THE COST FOR THE BID ITEM "PREPARE BRIDGE FOR WIDENING".

## DRILL AND BOND REQUIREMENTS

| NO. | DATE | BY | REMARKS |
|---|---|---|---|

REVISIONS

UTAH DEPARTMENT OF TRANSPORTATION
SALT LAKE CITY, UTAH
STRUCTURES DIVISION
PARSONS

DESIGN HM 12/04 CHECK MB 01/05
DRAWN TA 12/04 CHECK MB 01/05
QUANT. STB 12/04 CHECK MBD 01/05

APPROVAL RECOMM. DATE SENIOR DESIGN ENGR.
APPROVED FOR USE BY UDOT DATE UDOT BRIDGE ENGR.

I-15; CORRIDOR IN UTAH COUNTY
I-15 OVER UPRR AND SR-114 IN LINDON
ABUTMENT DETAILS 1
PROJECT NUMBER SP-15-6(52)241

UTAH
COUNTY

C-352W
DRG. NO.

SHT. 12 OF 53

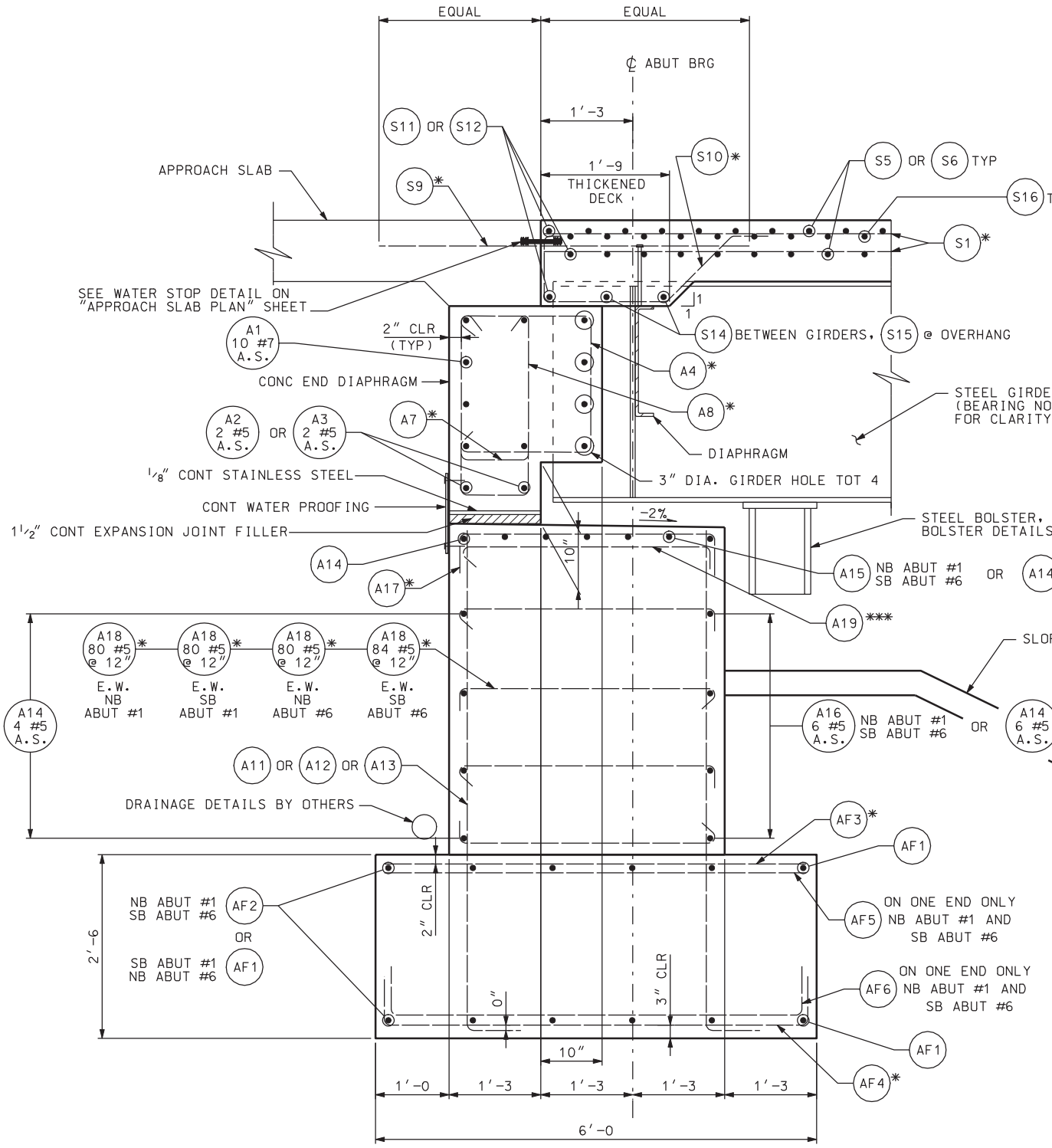


* PLACE PARALLEL TO STEEL GIRDER

** SPACED EVENLY WITH SURROUNDING BARS

*** A19 ON ONE END ONLY ABUT #1 NB AND ABUT #6 SB

## ABUTMENT SECTION A-A

DGN File: IP_PWPcdnsl717\4433_C-352-13_ABUTDT02.dgn
02-MAY-2005

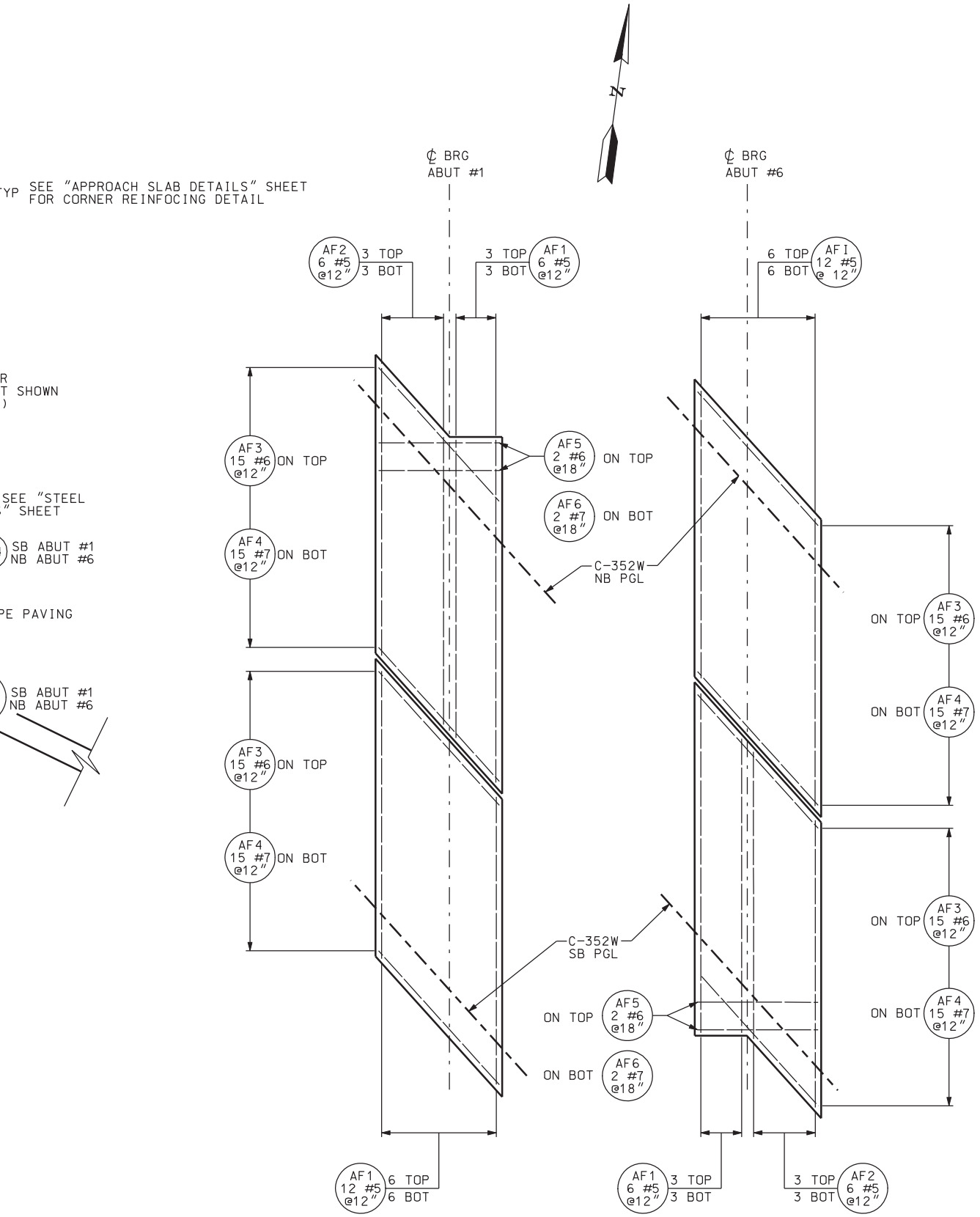


FOOTING PLAN VIEW

| NO. | DATE | BY | REMARKS |
|---|---|---|---|
| | | | |

REVISIONS

UTAH DEPARTMENT OF TRANSPORTATION
SALT LAKE CITY, UTAH
STRUCTURES DIVISION

PARSONS

DESIGN HM 12/04 CHECK MB 01/05
DRAWN TA 12/04 CHECK MB 01/05
QUANT. STB 12/04 CHECK MBD 01/05

APPROVAL RECOMM. DATE SENIOR DESIGN ENGR.
APPROVED FOR USE BY UDOT DATE UDOT BRIDGE ENGR.

I-15; CORRIDOR IN UTAH COUNTY
I-15 OVER UPRR AND SR-114 IN LINDON
ABUTMENT DETAILS 2

PROJECT NUMBER SP-15-6(52)241

UTAH
COUNTY

C-352W
DRG. NO.

SHT. 13 OF 53

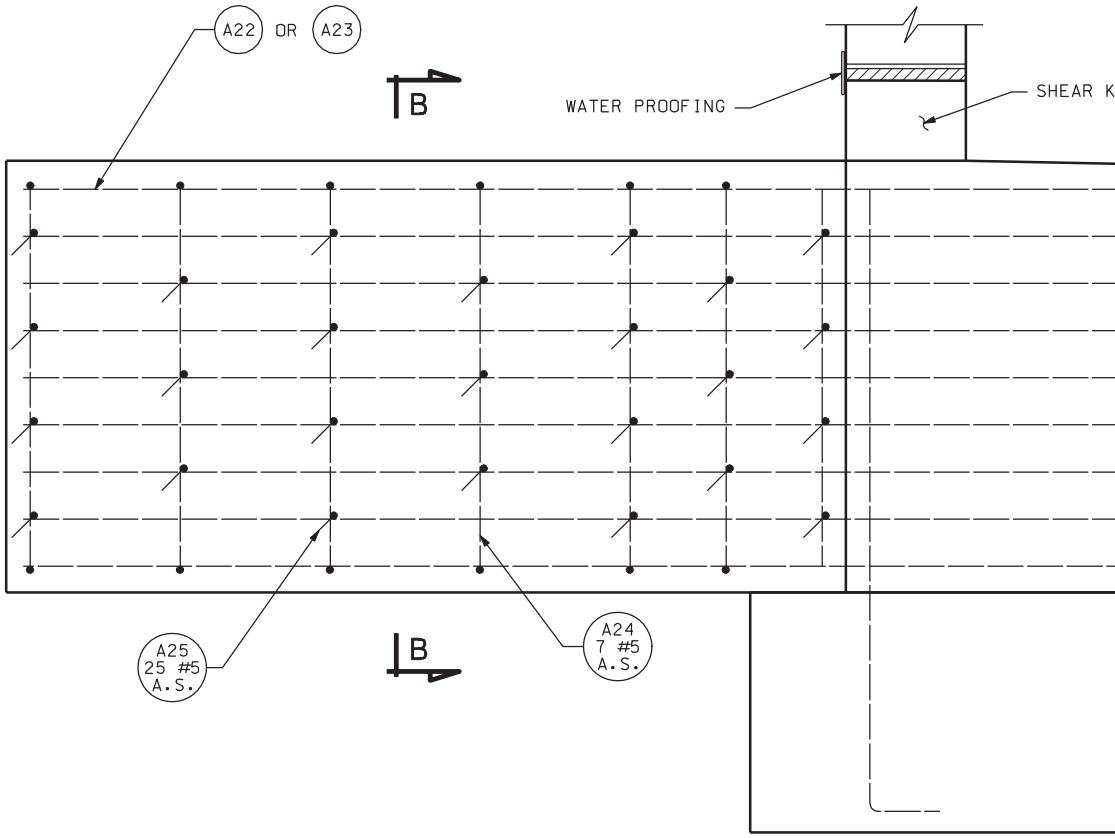


NOTE

FINWALL ELEVATION

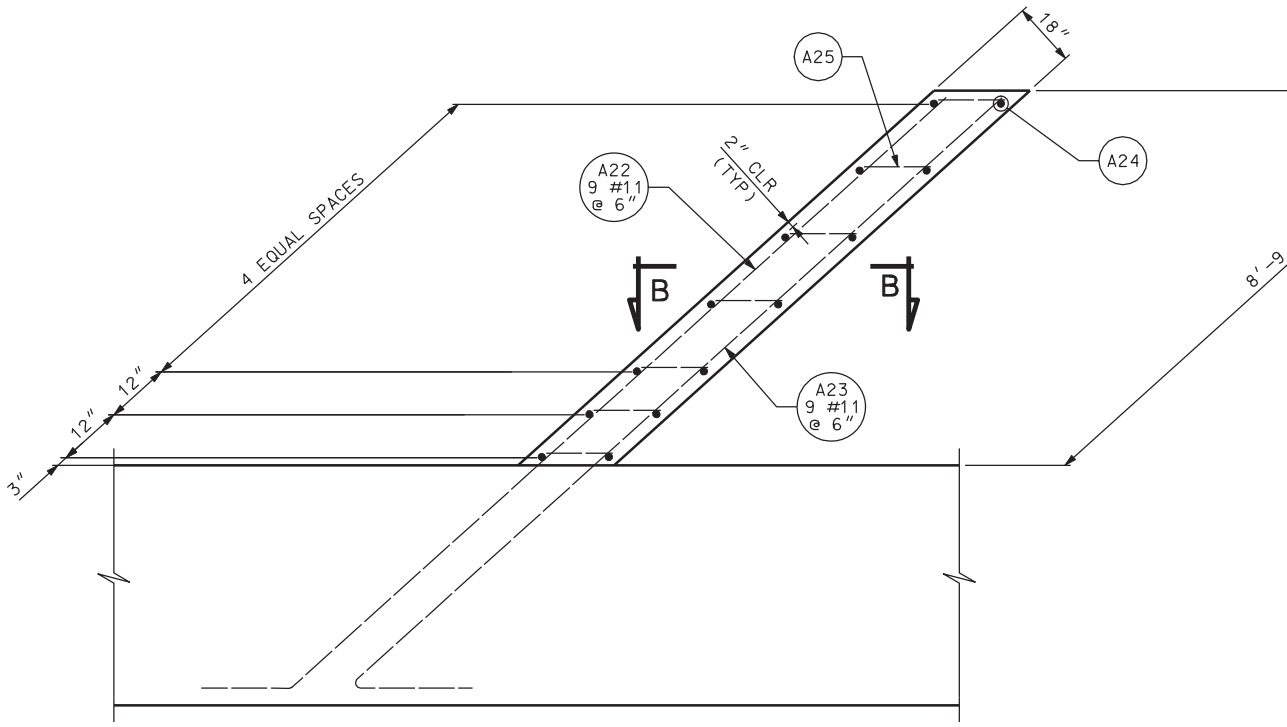


FINWALL PLAN

ABUTMENT REINF NOT SHOWN FOR CLARITY

EY

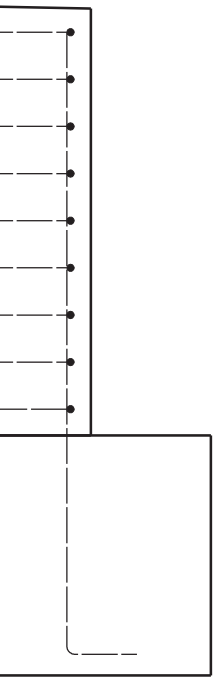

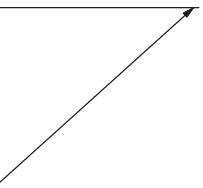

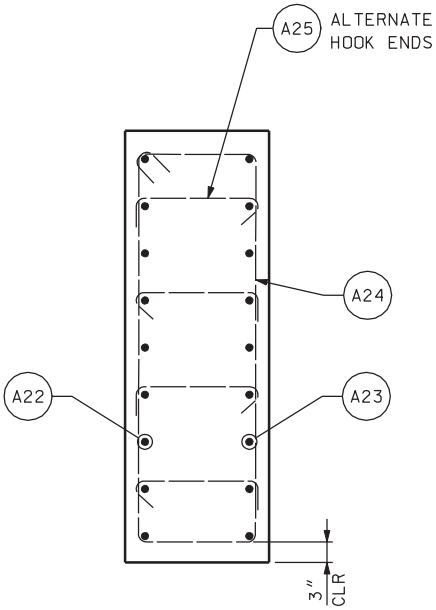


SECTION B-B

| NO. | DATE | BY | REMARKS |
|---|---|---|---|

REVISIONS

UTAH DEPARTMENT OF TRANSPORTATION
SALT LAKE CITY, UTAH
STRUCTURES DIVISION
PARSONS

DESIGN HM 12/04 CHECK MB 01/05
DRAWN TA 12/04 CHECK MB 01/05
QUANT. STB 12/04 CHECK MBD 01/05

APPROVAL RECOMM. DATE SENIOR DESIGN ENGR.
APPROVED FOR USE BY UDOT DATE UDOT BRIDGE ENGR.

I-15; CORRIDOR IN UTAH COUNTY
I-15 OVER UPRR AND SR-114 IN LINDON
ABUTMENT DETAILS 3

PROJECT NUMBER SP-15-6(52)241

UTAH
COUNTY

C-352W
DRG. NO.

SHT. 14 OF 53

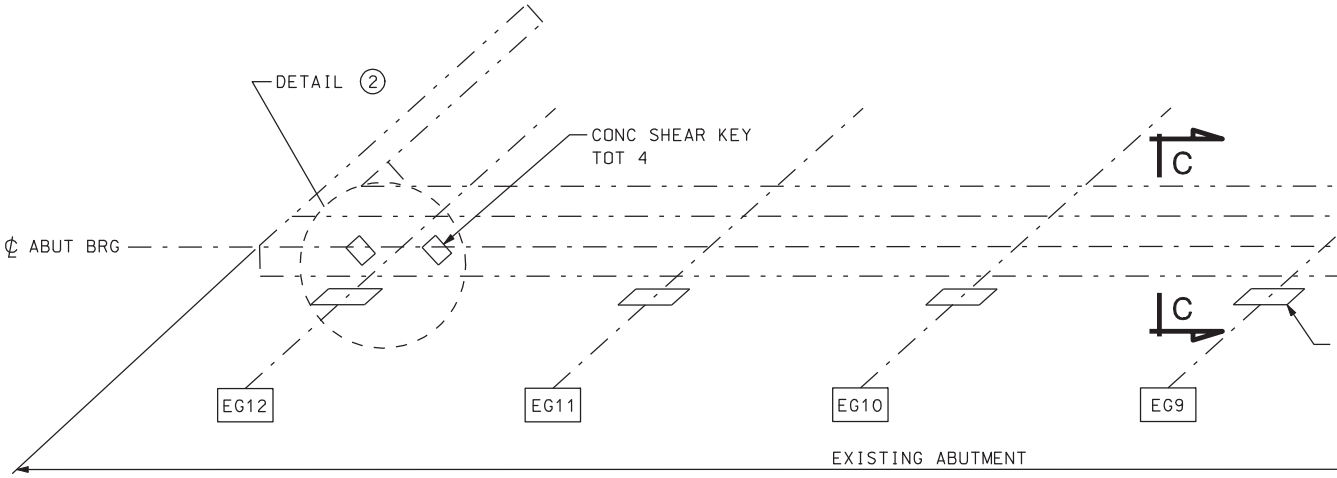


## PLAN

ABUT 1 SB SHOWN
ABUT 6 SB, ABUT 6 NB & ABUT 1

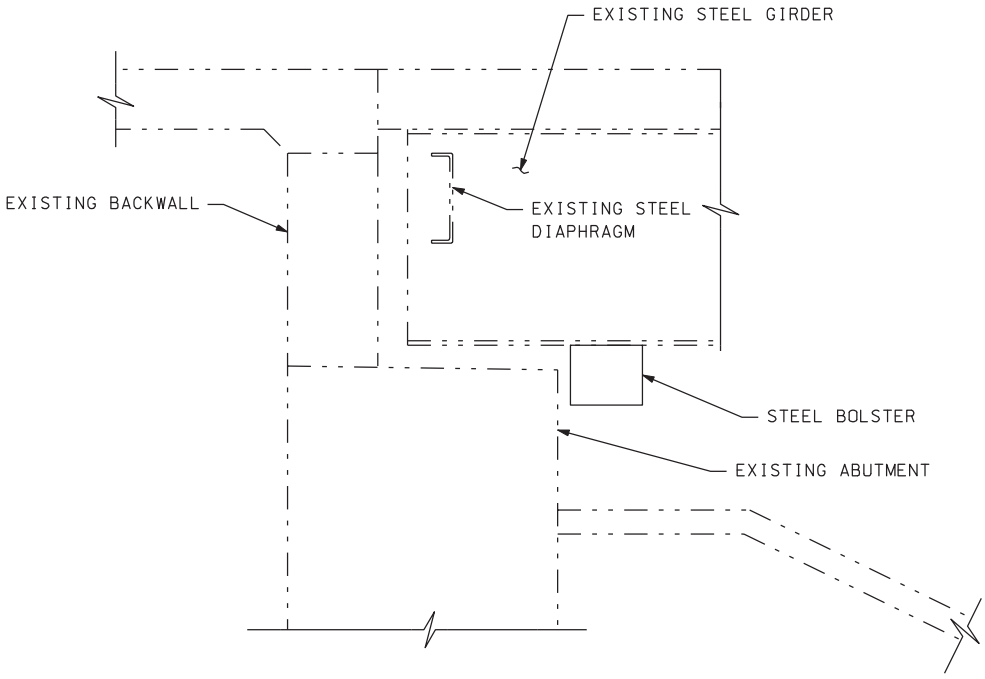


## SECTION C-C

DGN File:IP_PWPcdms1717\4433_C-352-15_ABUTDT04.dgn
02-MAY-2005

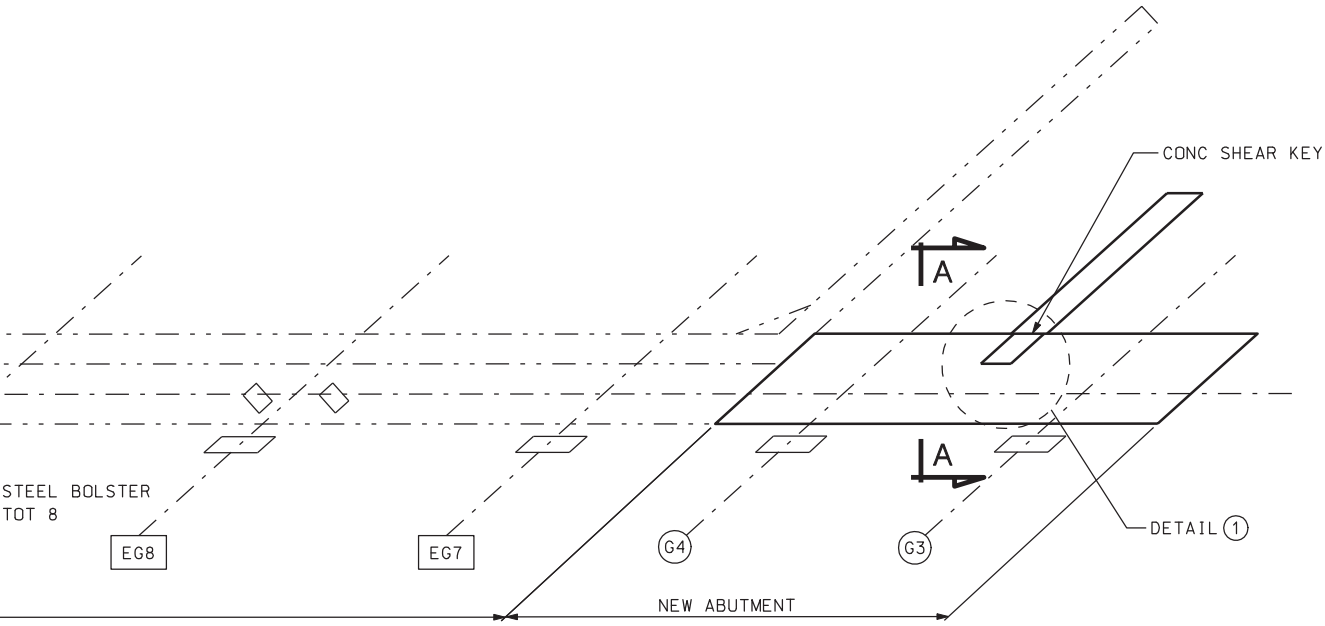


NB SIMILAR

## NOTES

1. SEE "ABUTMENT DETAILS 2" SHEET FOR SECTION A-A.
2. SEE "ABUTMENT DETAILS 6" SHEET FOR DETAIL 2.
3. SEE "ABUTMENT DETAILS 5" SHEET FOR DETAIL 1.
4. SEE "STEEL BOLSTER DETAILS" SHEET FOR STEEL BOLSTER DETAILS.

| NO. | DATE | BY | REMARKS |
|---|---|---|---|

REVISIONS

UTAH DEPARTMENT OF TRANSPORTATION
SALT LAKE CITY, UTAH
STRUCTURES DIVISION
PARSONS

DESIGN HM 12/04 CHECK MB 01/05
DRAWN TA 12/04 CHECK MB 01/05
QUANT. STB 12/04 CHECK MBD 01/05

APPROVAL RECOMM. DATE SENIOR DESIGN ENGR.
APPROVED FOR USE BY UDOT DATE UDOT BRIDGE ENGR.

I-15; CORRIDOR IN UTAH COUNTY
I-15 OVER UPRR AND SR-114 IN LINDON
ABUTMENT DETAILS 4

PROJECT NUMBER SP-15-6(52)241

UTAH
COUNTY

C-352W
DRG. NO.

SHT. 15 OF 53

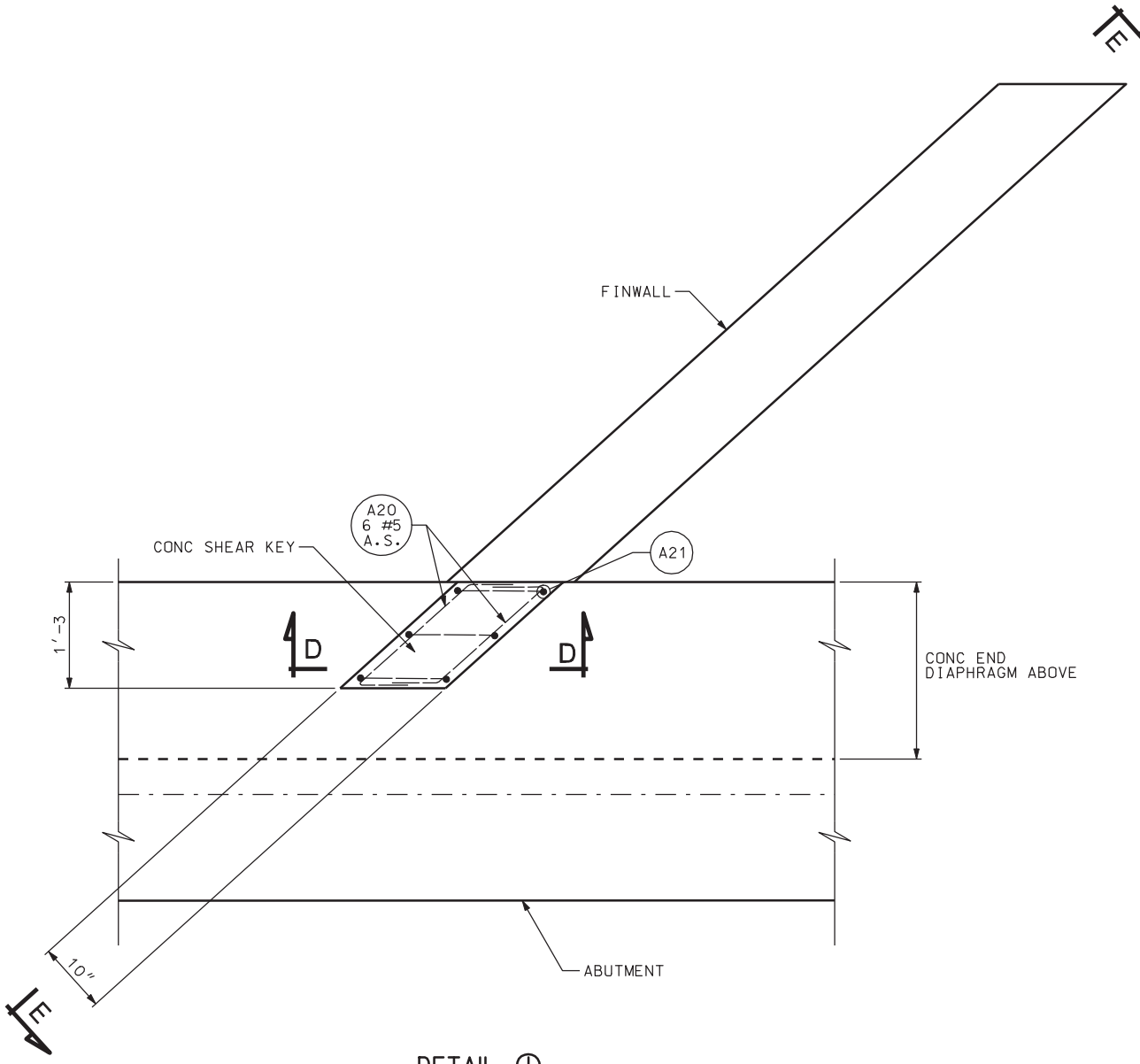
E
FINWALL
A20
6 #5
A.S.
CONC SHEAR KEY
A21
1'-3
D
D
CONC END
DIAPHRAGM ABOVE
10"
ABUTMENT
E

DETAIL 1

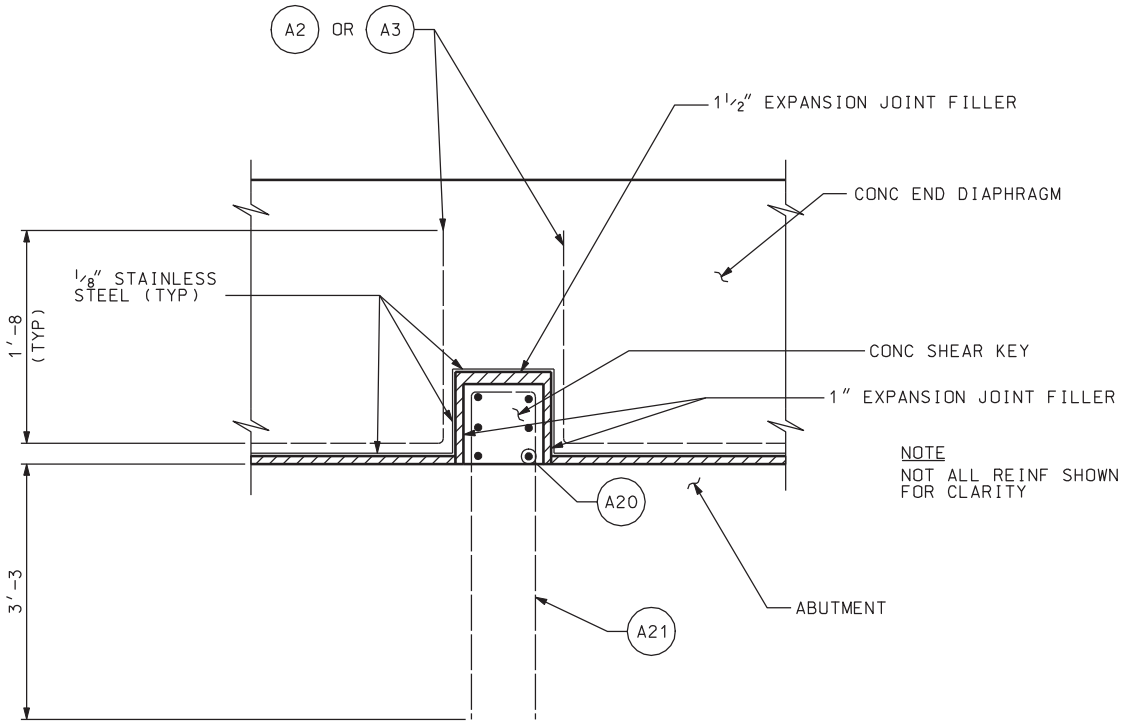


SECTION D-D

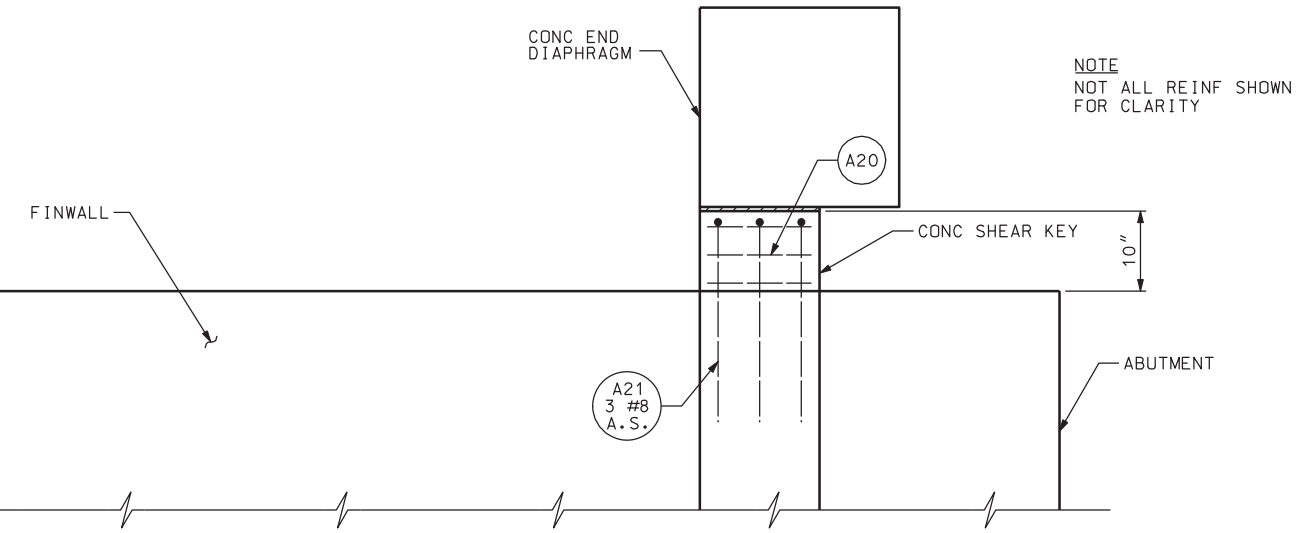


SECTION E-E

| NO. | DATE | BY | REMARKS |
|---|---|---|---|
| | | | |

REVISIONS

UTAH DEPARTMENT OF TRANSPORTATION
SALT LAKE CITY, UTAH
STRUCTURES DIVISION
PARSONS

DESIGN HM 12/04 CHECK MB 01/05
DRAWN TA 12/04 CHECK MB 01/05
QUANT. STB 12/04 CHECK MBD 01/05

APPROVAL RECOMM. DATE SENIOR DESIGN ENGR.
APPROVED FOR USE BY UDOT DATE UDOT BRIDGE ENGR.

I-15; CORRIDOR IN UTAH COUNTY
I-15 OVER UPRR AND SR-114 IN LINDON
ABUTMENT DETAILS 5

PROJECT NUMBER SP-15-6(52)241

UTAH
COUNTY

C-352W
DRG. NO.

SHT. 16 OF 53

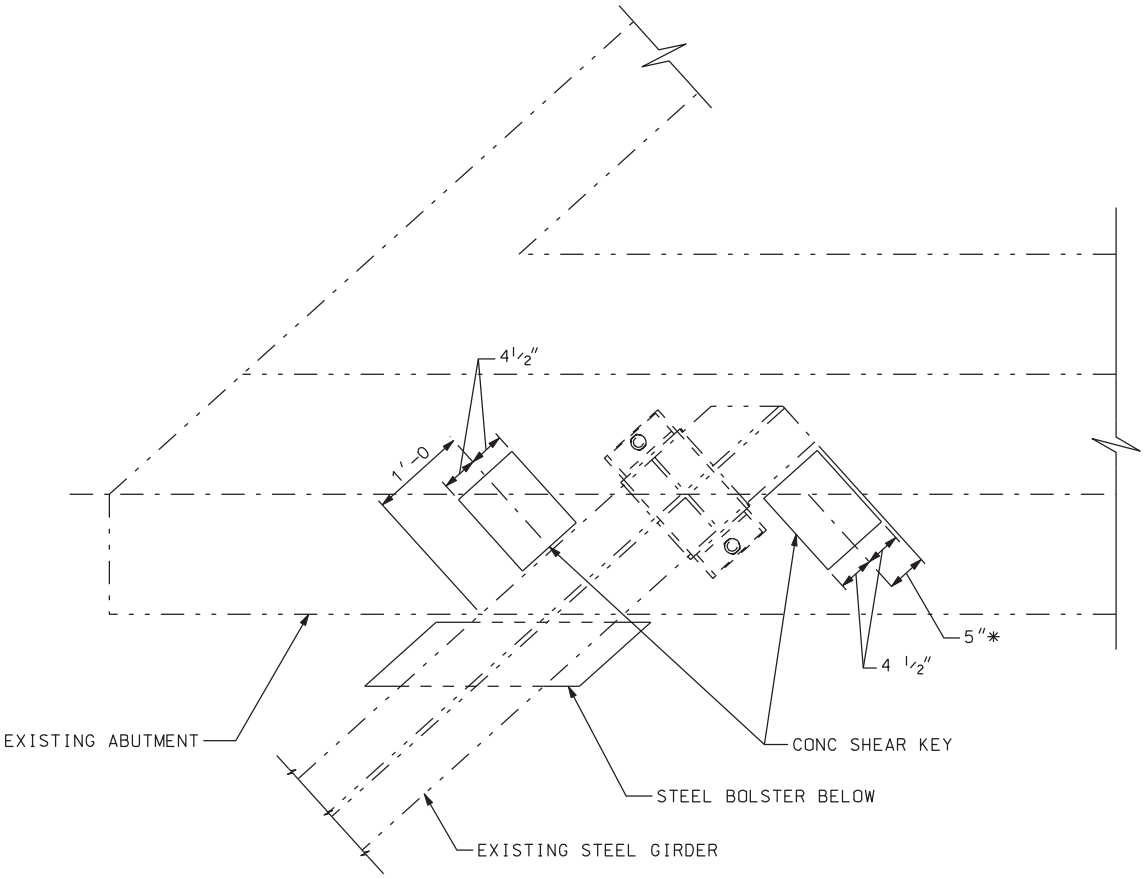


DETAIL ②

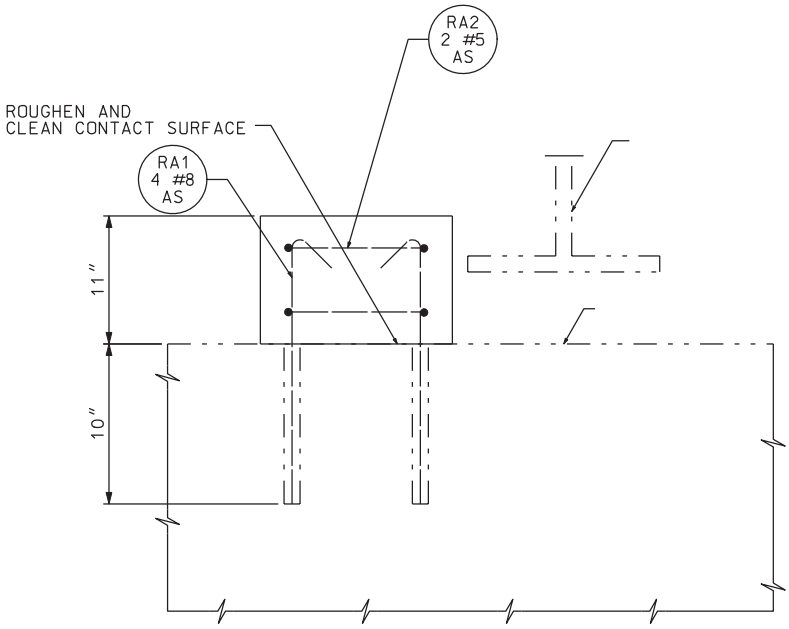


SECTION F-F

NOTE

DGN File:IP_PWPcdms1717\4433_C-352-17_ABUTDT06.dgn

02-MAY-2005

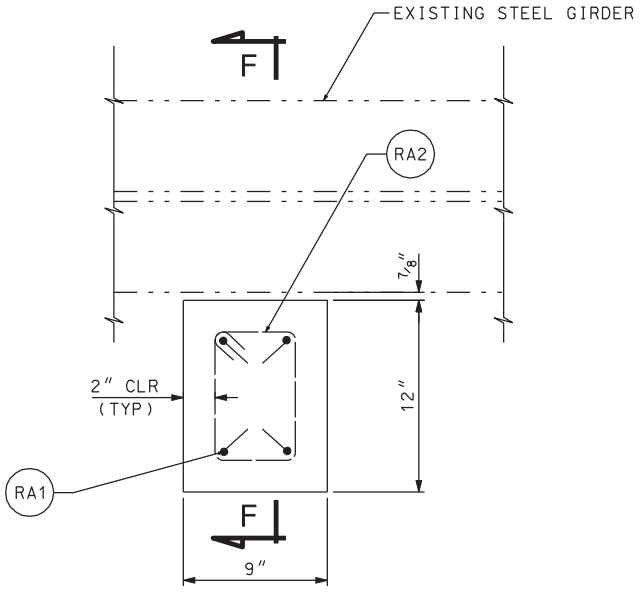


CONC SHEAR KEY DETAIL

| QUANTITIES STRUCTURAL CONCRETE | |
|---|---|
| NB & SB KEYS | 0.4 CY |

| NO. | DATE | BY | REMARKS |
|---|---|---|---|

REVISIONS

UTAH DEPARTMENT OF TRANSPORTATION
SALT LAKE CITY, UTAH
STRUCTURES DIVISION
PARSONS

DESIGN HM 12/04 CHECK MB 01/05
DRAWN TA 12/04 CHECK MB 01/05
QUANT. STB 12/04 CHECK MBD 01/05

APPROVAL RECOMM. DATE SENIOR DESIGN ENGR.
APPROVED FOR USE BY UDOT DATE UDOT BRIDGE ENGR.

I-15; CORRIDOR IN UTAH COUNTY
I-15 OVER UPRR AND SR-114 IN LINDON
ABUTMENT DETAILS 6

PROJECT NUMBER SP-15-6(52)241

UTAH
COUNTY

C-352W
DRG. NO.

SHT. 17 OF 53

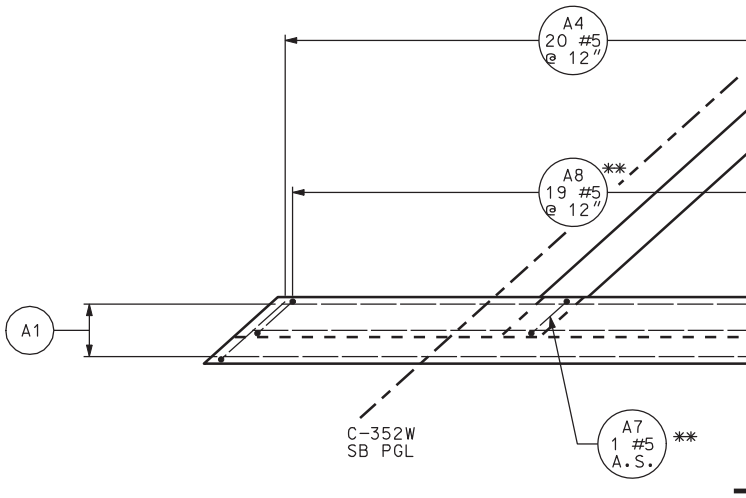


LOWER PORTION O

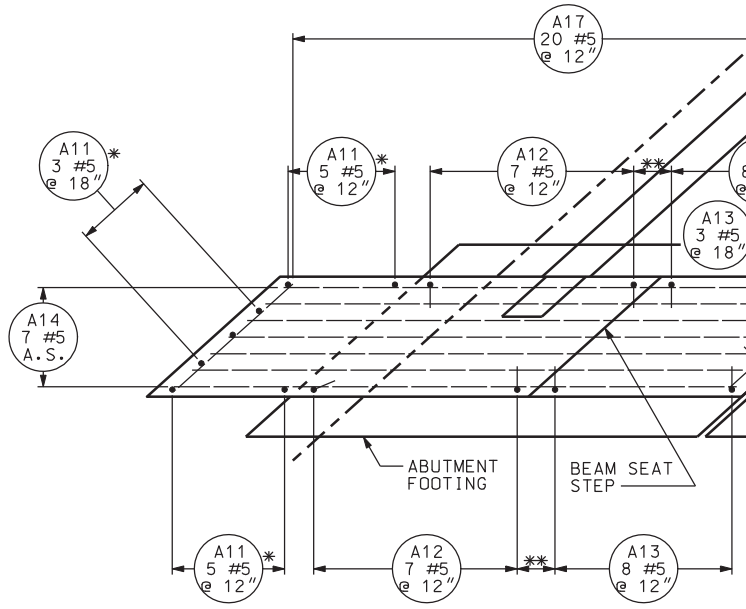


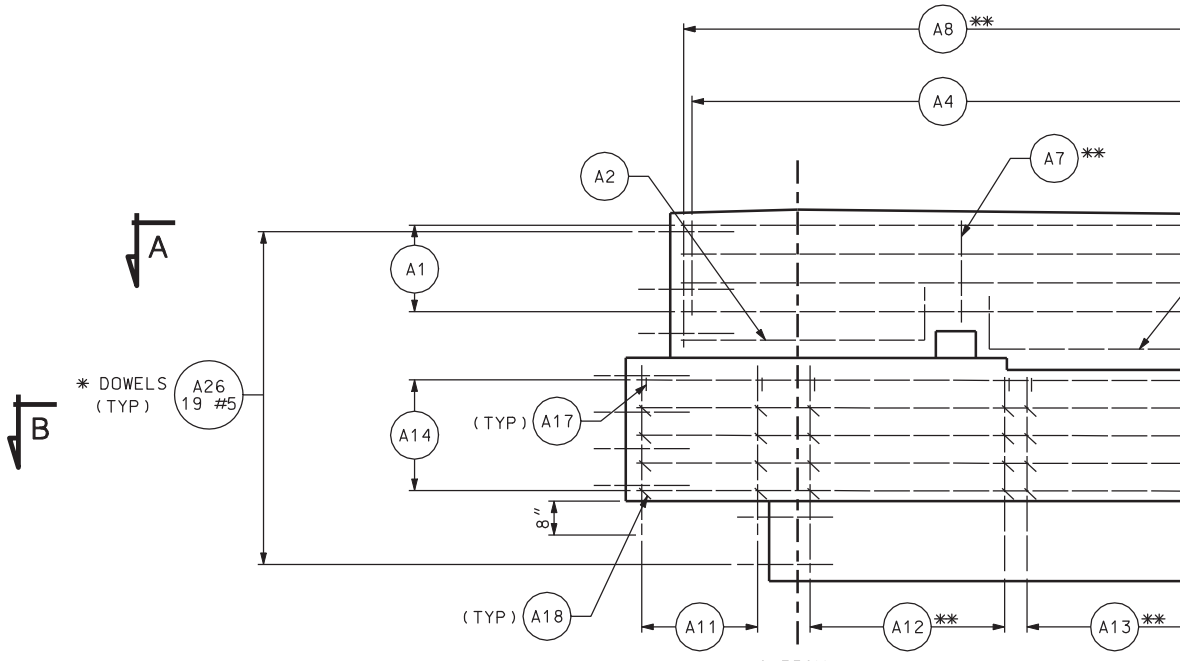


ELEVATIO

DGN File:IP_PWPcdms1717\4433_C-352-18_ABUT1_REINF.dgn

02-MAY-2005

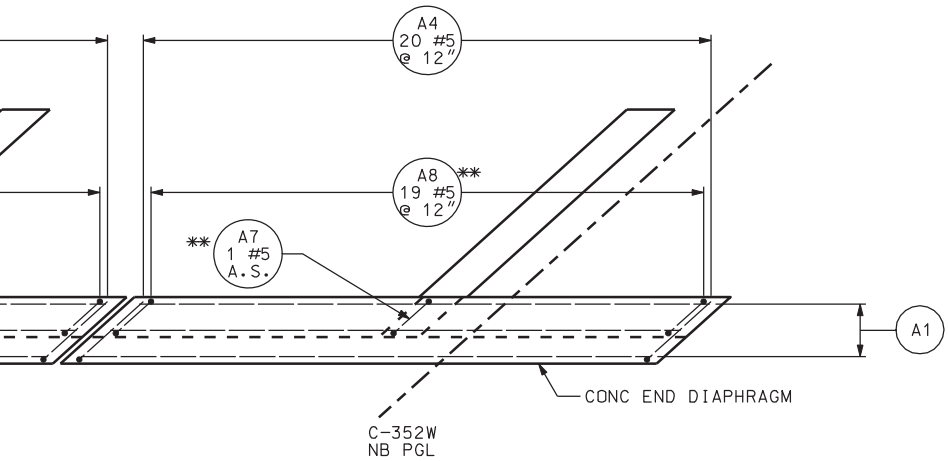


SECTION A

OF ABUTMENT NOT SHOWN FOR CLARITY

* DRILL & BOND, SEE DRILL AND BOND REQUIREMENTS ON "ABUTMENT DETAILS 1" SHEET.

** SPACE EVENLY WITH SURROUNDING BARS

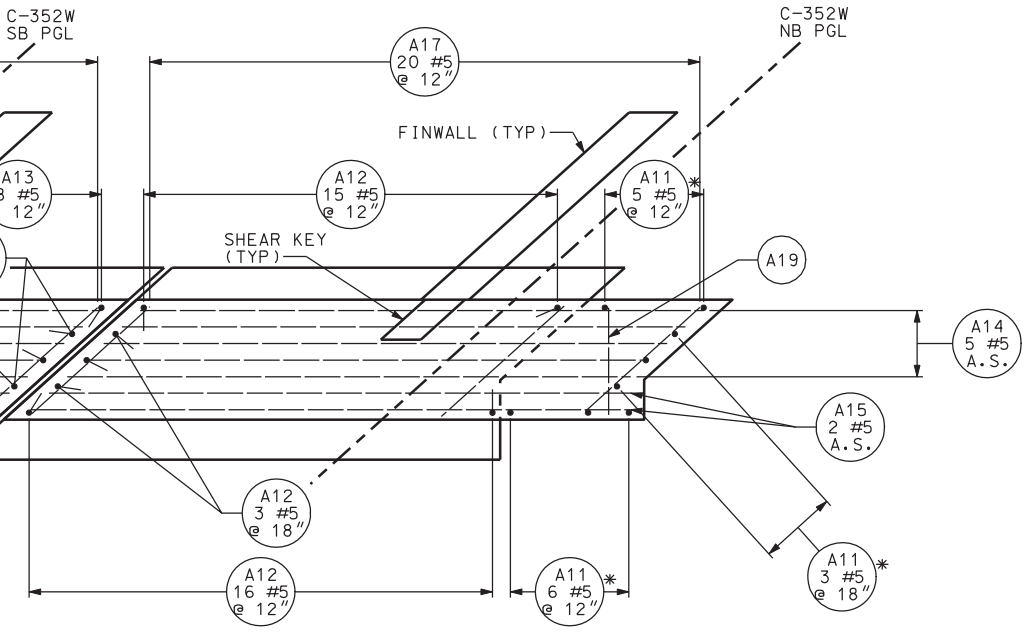


SECTION B

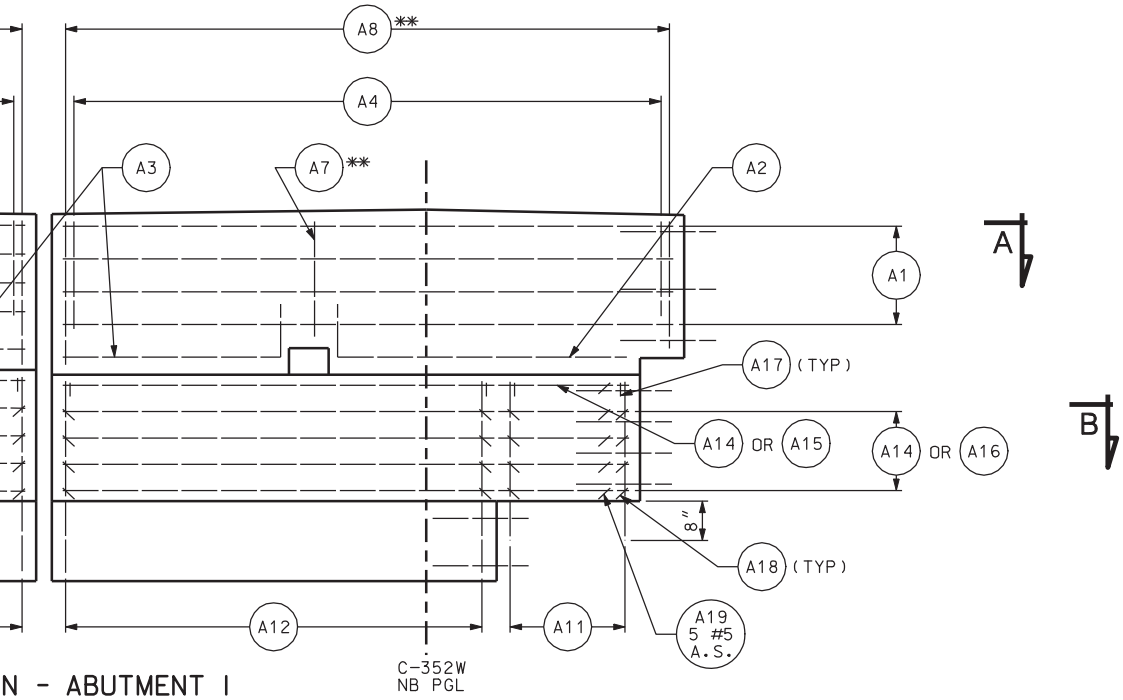


N - ABUTMENT I

| NO. | DATE | BY | REMARKS |
|---|---|---|---|
| | | | |

REVISIONS

UTAH DEPARTMENT OF TRANSPORTATION
SALT LAKE CITY, UTAH
STRUCTURES DIVISION
PARSONS

DESIGN HM 12/04 CHECK MB 01/05
DRAWN TA 12/04 CHECK MB 01/05
QUANT. STB 12/04 CHECK MBD 01/05

APPROVAL RECOMM. DATE SENIOR DESIGN ENGR.
APPROVED FOR USE BY UDOT DATE UDOT BRIDGE ENGR.

I-15; CORRIDOR IN UTAH COUNTY
I-15 OVER UPRR AND SR-114 IN LINDON
ABUTMENT 1 REINFORCEMENT

PROJECT NUMBER SP-15-6(52)241

UTAH
COUNTY

C-352W
DRG. NO.

SHT. 18 OF 53

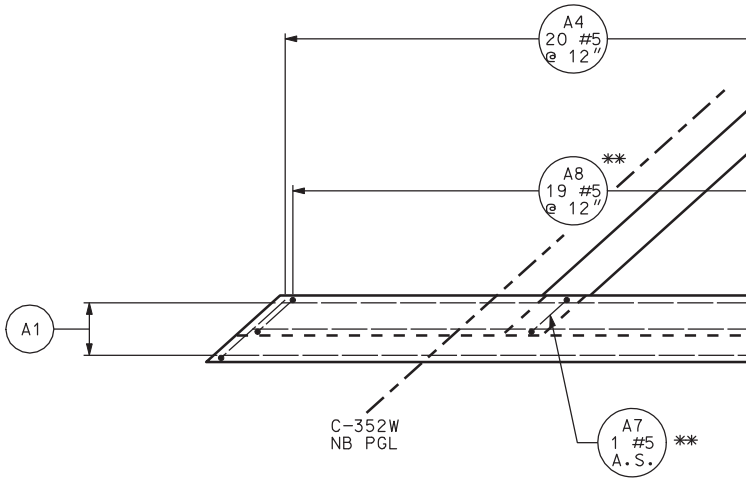


LOWER PORTION OF

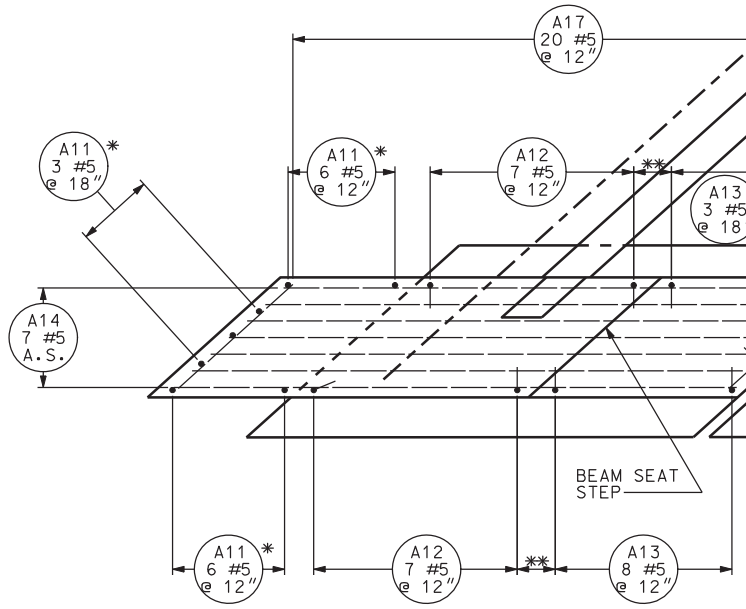


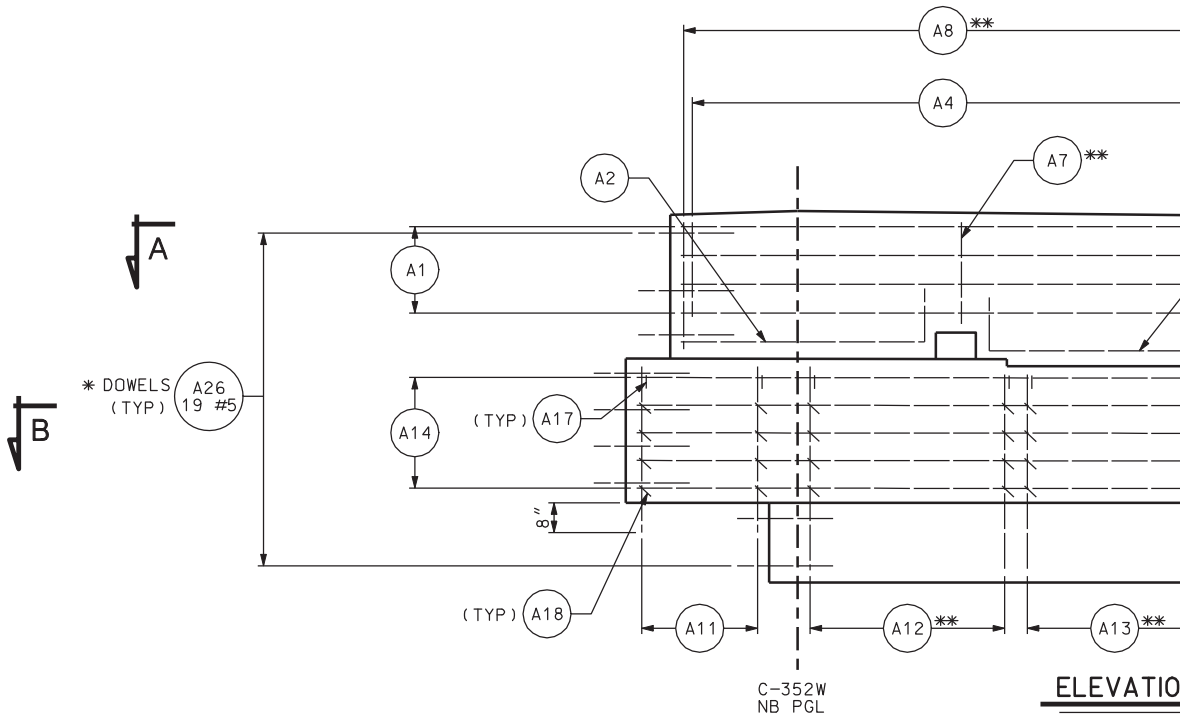


ELEVATIO

DGN File:IP_PWPcdms1717\4433_C-352-19_ABUT6_REINF.dgn

02-MAY-2005

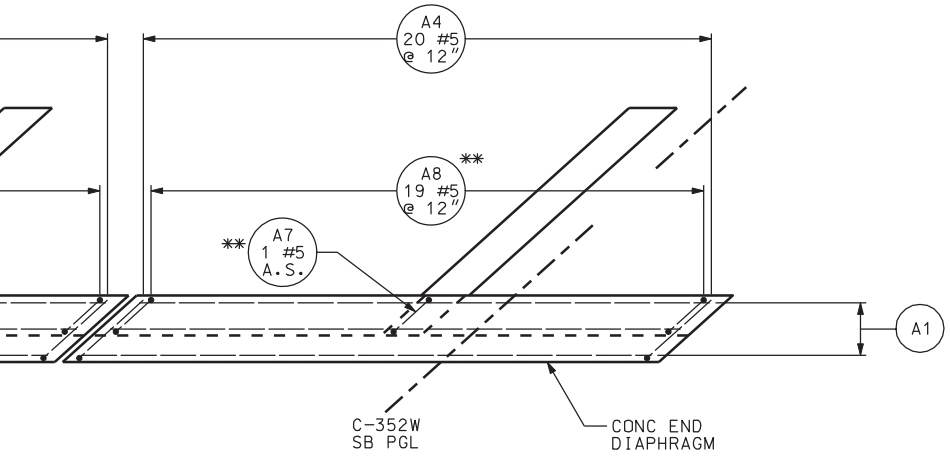


SECTION A

ABUTMENT NOT SHOWN FOR CLARITY

* DRILL & BOND, SEE DRILL AND BOND REQUIREMENTS ON "ABUTMENT DETAILS 1" SHEET.

** SPACE EVENLY WITH SURROUNDING BARS

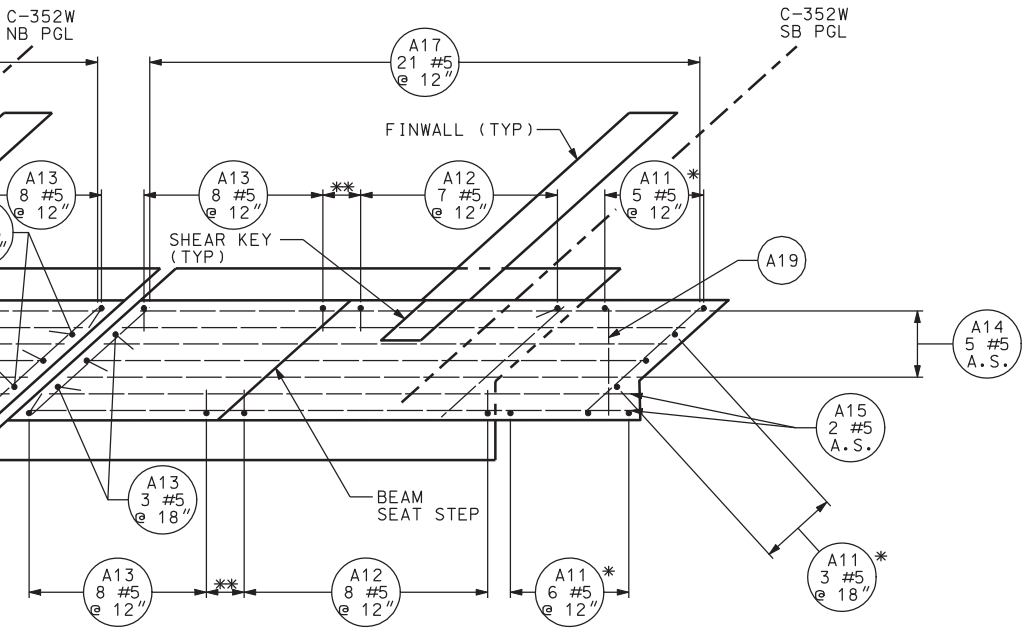


SECTION B

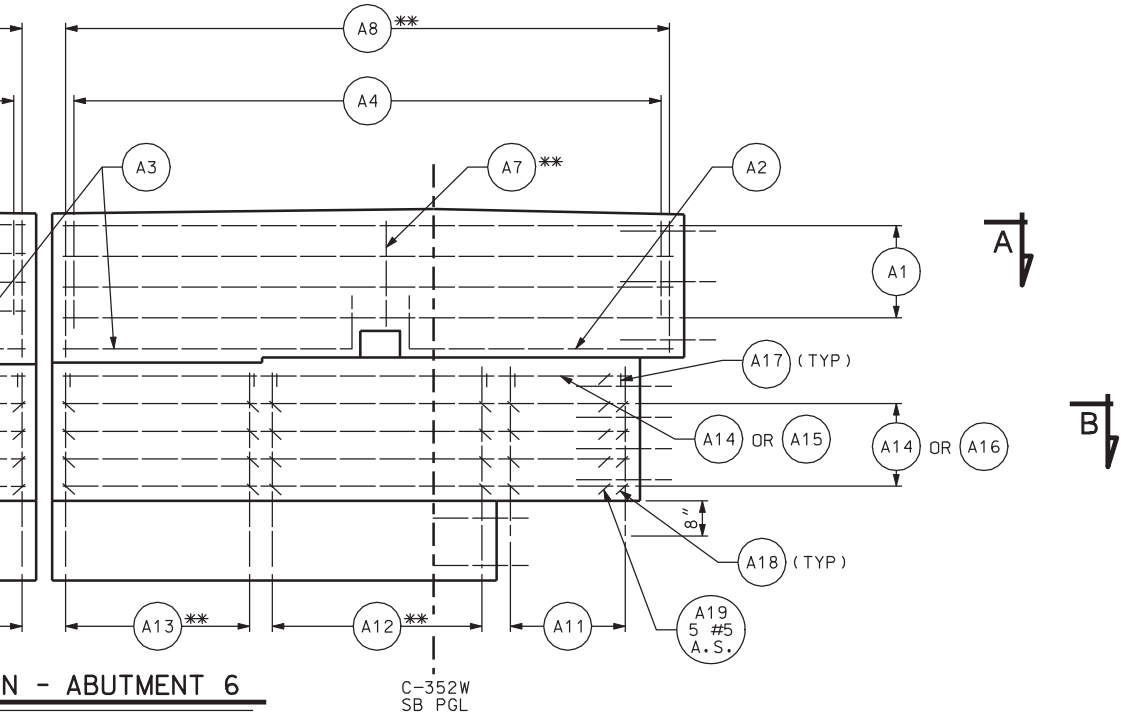


N - ABUTMENT 6

A

B

| NO. | DATE | BY | REMARKS |
|---|---|---|---|

REVISIONS

UTAH DEPARTMENT OF TRANSPORTATION
SALT LAKE CITY, UTAH
STRUCTURES DIVISION

PARSONS

DESIGN HM 12/04 CHECK MB 01/05
DRAWN TA 12/04 CHECK MB 01/05
QUANT. STB 12/04 CHECK MBD 01/05

APPROVAL RECOMM. DATE SENIOR DESIGN ENGR.
APPROVED FOR USE BY UDOT DATE UDOT BRIDGE ENGR.

I-15; CORRIDOR IN UTAH COUNTY
I-15 OVER UPRR AND SR-114 IN LINDON
ABUTMENT 6 REINFORCEMENT

PROJECT NUMBER SP-15-6(52)241

UTAH
COUNTY

C-352W
DRG. NO.

SHT. 19 OF 53

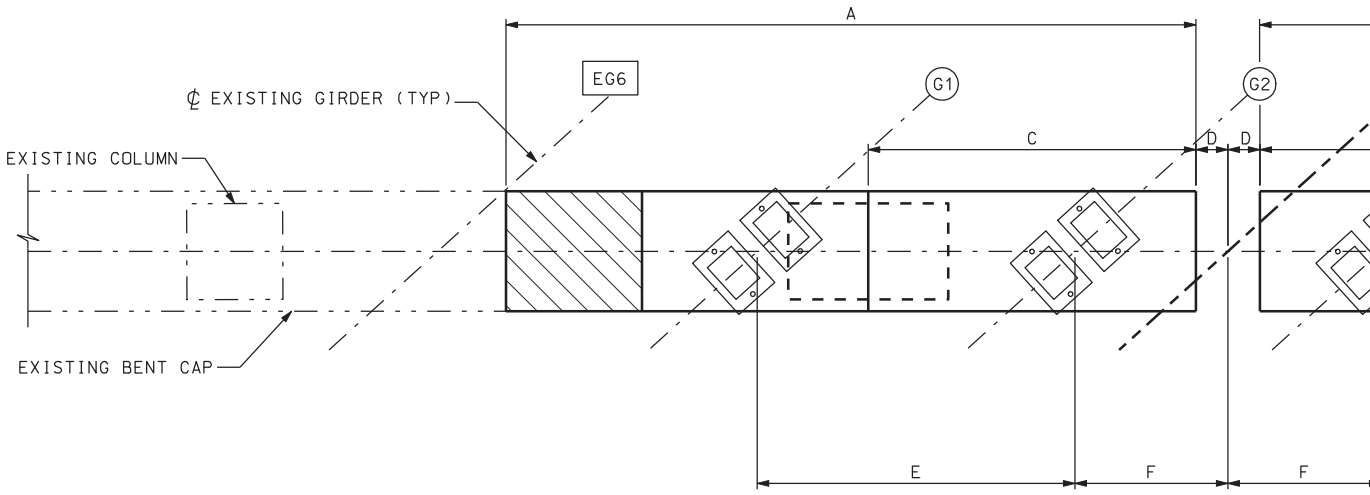


PLAN - BENTS 2, 3, 4 &

| ELEVATION SCHEDULE | | | | |
|---|---|---|---|---|
| LOCATION | BENT 2 | BENT 3 | BENT 4 | BENT 5 |
| G1 | 4520.36 | 4521.11 | 4521.69 | 4522.13 |
| G2 | 4520.35 | 4521.08 | 4521.64 | 4522.06 |
| G3 | 4520.49 | 4521.20 | 4521.75 | 4522.15 |
| G4 | 4520.62 | 4521.31 | 4521.85 | 4522.24 |
| C1 | 4516.11 | 4516.86 | 4517.44 | 4517.88 |
| C2 | 4516.37 | 4517.06 | 4517.60 | 4517.99 |

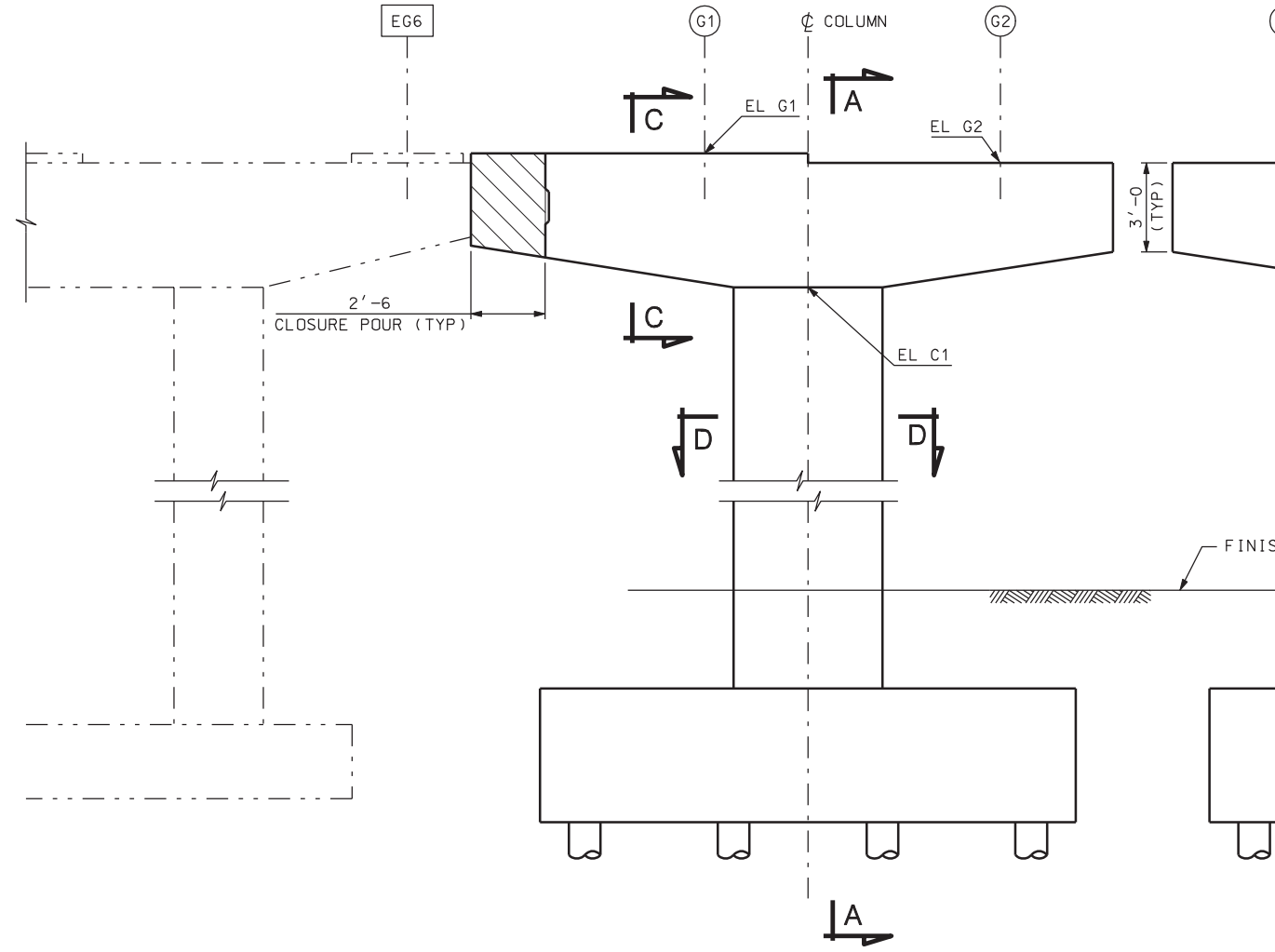


ELEVATION - BENTS 2

CAP REINFORCING STEEL NOT SHOWN

DGN File:IP_PWPcdms1717\4433_C-352-20_BENT01.dgn

02-MAY-2005

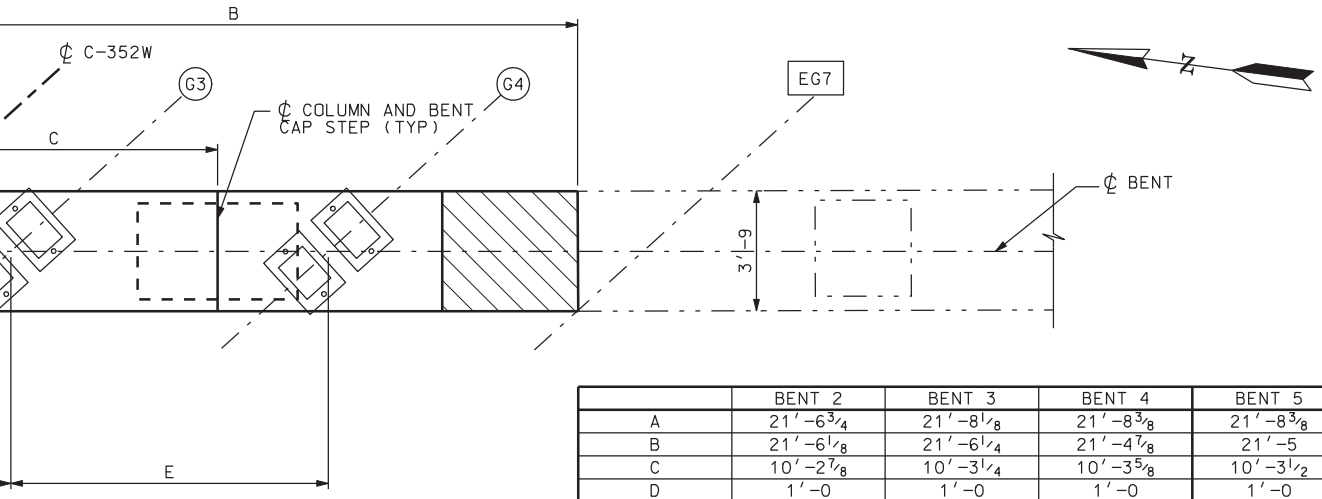


5

| | BENT 2 | BENT 3 | BENT 4 | BENT 5 |
|---|---|---|---|---|
| A | 21'-6 3/4 | 21'-8 1/8 | 21'-8 3/8 | 21'-8 3/8 |
| B | 21'-6 1/8 | 21'-6 1/4 | 21'-4 7/8 | 21'-5 |
| C | 10'-2 7/8 | 10'-3 1/4 | 10'-3 5/8 | 10'-3 1/2 |
| D | 1'-0 | 1'-0 | 1'-0 | 1'-0 |
| E | 9'-11 1/8 | 9'-11 1/2 | 9'-11 7/8 | 9'-11 3/4 |
| F | 4'-9 3/8 | 4'-9 1/2 | 4'-9 5/8 | 4'-9 5/8 |

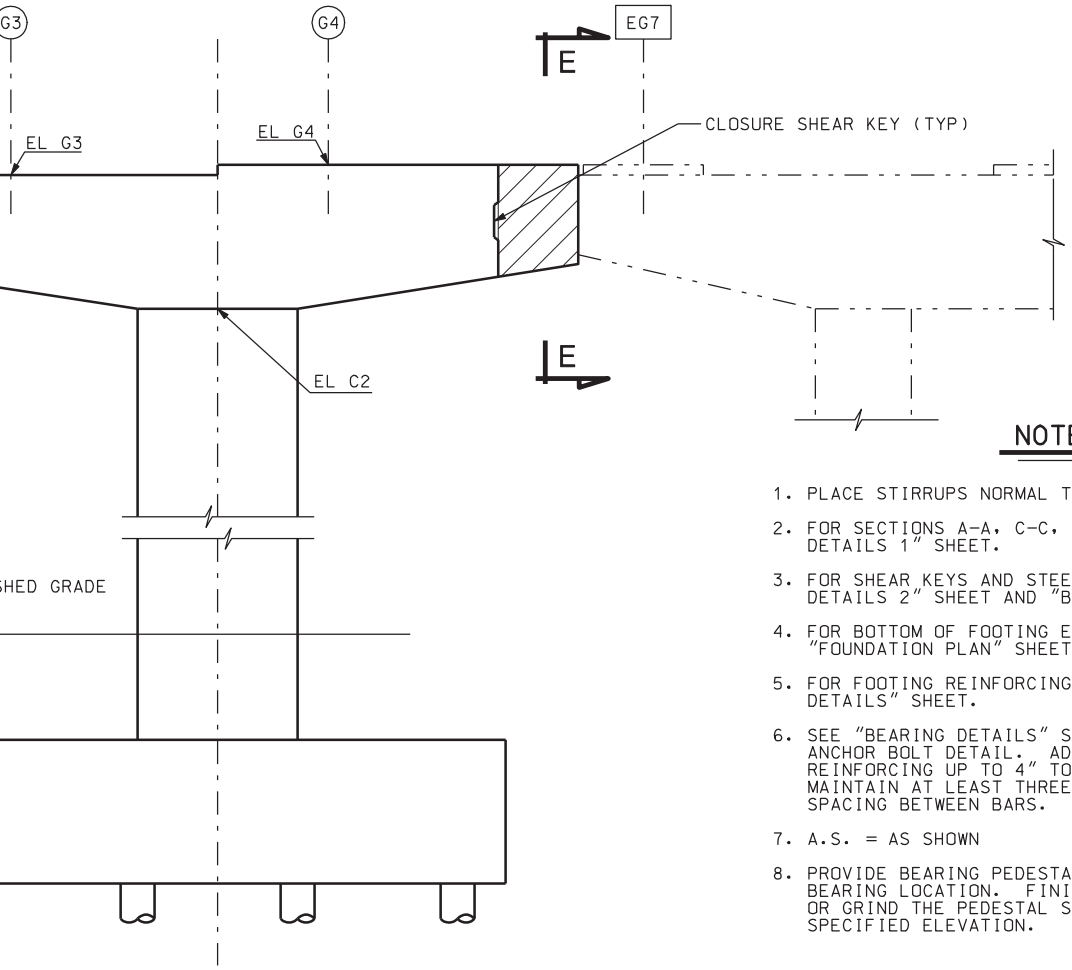


, 3, 4 & 5

FOR FOR CLARITY

## NOTES

1. PLACE STIRRUPS NORMAL TO ℄ BENT.
2. FOR SECTIONS A-A, C-C, D-D AND E-E, SEE "BENT DETAILS 1" SHEET.
3. FOR SHEAR KEYS AND STEEL BOLSTERS, SEE "BENT DETAILS 2" SHEET AND "BENT DETAILS 3" SHEET.
4. FOR BOTTOM OF FOOTING ELEVATIONS, SEE "FOUNDATION PLAN" SHEET.
5. FOR FOOTING REINFORCING, SEE "BENT FOOTING DETAILS" SHEET.
6. SEE "BEARING DETAILS" SHEET FOR BEARING AND ANCHOR BOLT DETAIL. ADJUST SPACING OF BENT CAP REINFORCING UP TO 4" TO ACCOMMODATE ANCHOR BOLTS. MAINTAIN AT LEAST THREE BAR DIAMETERS CLEAR SPACING BETWEEN BARS.
7. A.S. = AS SHOWN
8. PROVIDE BEARING PEDESTAL 1'-2 X 1'-8 AT EACH BEARING LOCATION. FINISH THE PEDESTAL HIGH. RUB OR GRIND THE PEDESTAL SMOOTH AND LEVEL TO THE SPECIFIED ELEVATION.

## QUANTITIES

STRUCTURAL CONCRETE

| LOCATION | BENT 2 | BENT 3 | BENT 4 | BENT 5 |
|---|---|---|---|---|
| NB & SB BENT CAP | 22.4 CY | 22.5 CY | 22.4 CY | 22.4 CY |
| NB & SB COLUMN | 30.3 CY | 31.1 CY | 24.1 CY | 25.1 CY |
| NB & SB FOOTING | 42.0 CY | 42.0 CY | 42.0 CY | 42.0 CY |
| TOTAL | 94.7 CY | 95.6 CY | 88.5 CY | 89.5 CY |

| NO. | DATE | BY | REMARKS |
|---|---|---|---|
| | | | |

REVISIONS

UTAH DEPARTMENT OF TRANSPORTATION
SALT LAKE CITY, UTAH
STRUCTURES DIVISION
PARSONS

DESIGN HM 12/04 CHECK MBD 01/05
DRAWN TA 12/04 CHECK MBD 01/05
QUANT. STB 12/04 CHECK MBD 01/05

APPROVAL RECOMM. DATE SENIOR DESIGN ENGR.
APPROVED FOR USE BY UDOT DATE UDOT BRIDGE ENGR.

I-15; CORRIDOR IN UTAH COUNTY
I-15 OVER UPRR AND SR-114 IN LINDON
BENT PLAN & ELEVATION

PROJECT NUMBER SP-15-6(52)241

UTAH
COUNTY

C-352W
DRG. NO.

SHT. 20 OF 53

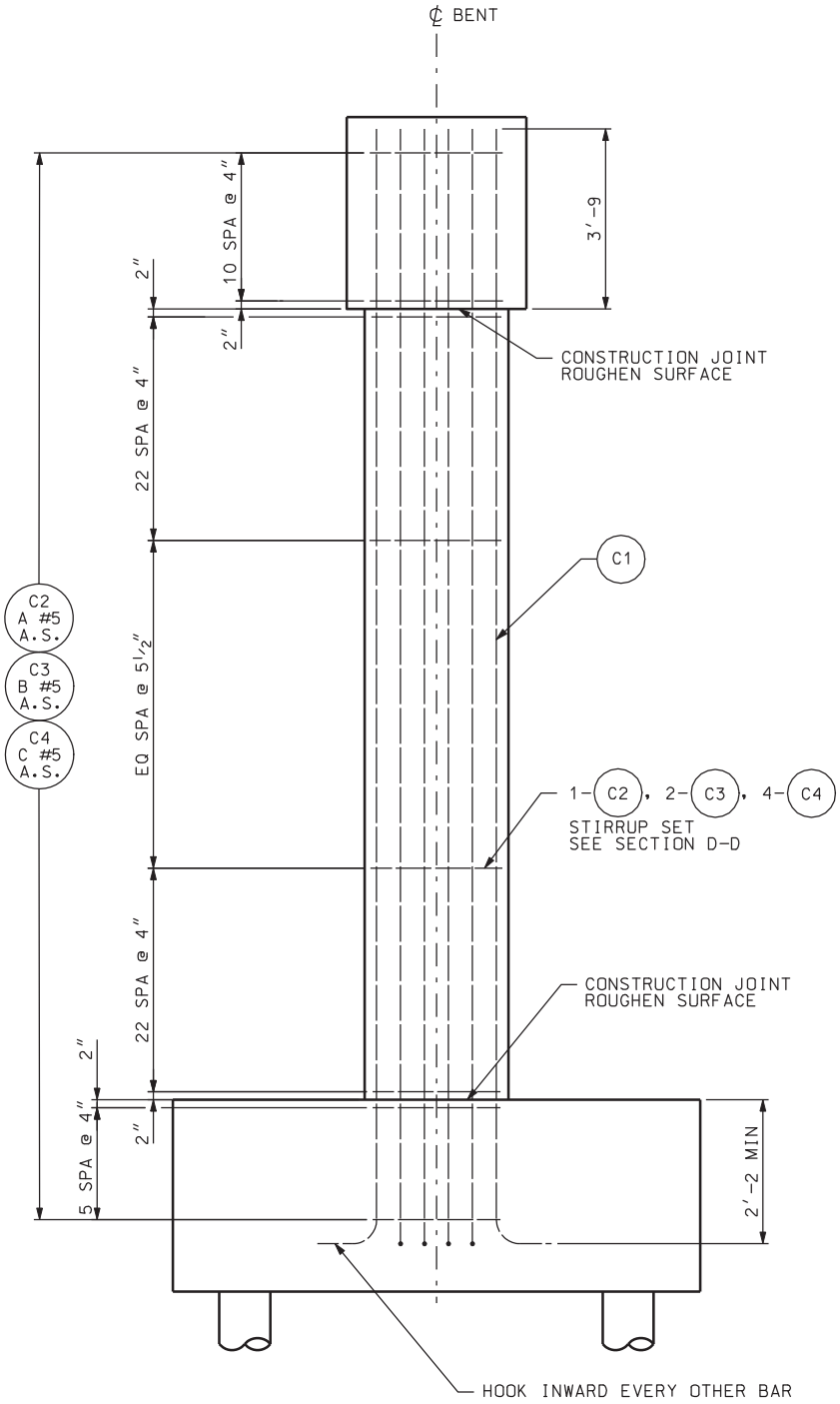


## SECTION A-A

SEE "BENT FOOTING DETAILS"
FOR FOOTING REINFORCEMENT.

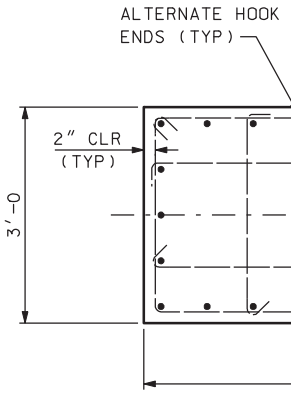


SECT

| NUMBER OF STIR | | | | |
|---|---|---|---|---|
| LOCATION | BAR MARK | BENT 2 | | |
| | | NB | SB | |
| A | C2 | 89 | 90 | |
| B | C3 | 178 | 180 | |
| C | C4 | 356 | 360 | |

DGN File:IP_PWPcdns1717\4433_C-352-21_BENTDT01.dgn

02-MAY-2005

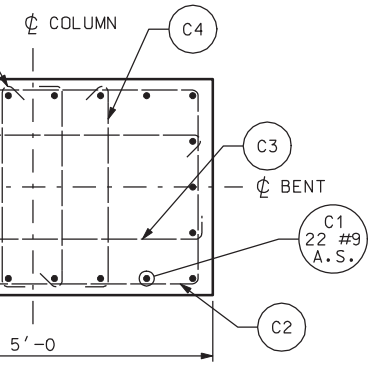


TION D-D

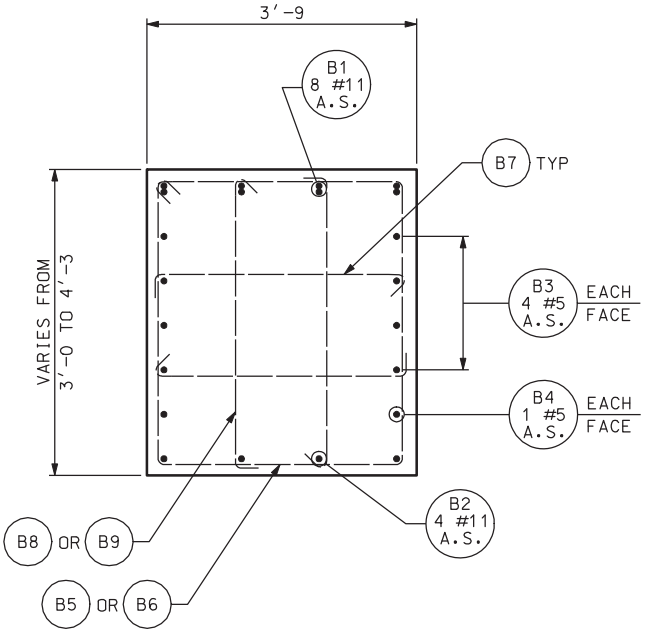


SECTION C-C

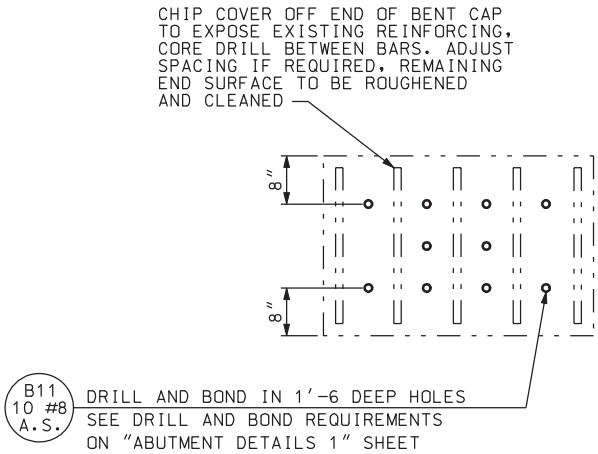


SECTION E-E

| RUP BARS IN COLUMNS | | | | | |
|---|---|---|---|---|---|
| BENT 3 | | BENT 4 | | BENT 5 | |
| NB | SB | NB | SB | NB | SB |
| 91 | 91 | 77 | 77 | 79 | 79 |
| 182 | 182 | 154 | 154 | 158 | 158 |
| 364 | 364 | 308 | 308 | 316 | 316 |

## NOTES

1. ADJUST SPACING OF PILE CAP AND BENT CAP REINFORCING UP TO 4" TO ACCOMMODATE COLUMN REINFORCING. MAINTAIN AT LEAST THREE BAR DIAMETER SPACING.
2. ADJUST HOOP AND TIE REINFORCING TO AVOID CONFLICT WITH BENT CAP REINFORCING.

| NO. | DATE | BY | REMARKS |
|---|---|---|---|

REVISIONS

UTAH DEPARTMENT OF TRANSPORTATION
SALT LAKE CITY, UTAH
STRUCTURES DIVISION
PARSONS

DESIGN HM 12/04 CHECK MB 01/05
DRAWN TA 12/04 CHECK MB 01/05
QUANT. STB 12/04 CHECK MBD 01/05

APPROVAL RECOMM. DATE SENIOR DESIGN ENGR.
APPROVED FOR USE BY UDOT DATE UDOT BRIDGE ENGR.

I-15; CORRIDOR IN UTAH COUNTY
I-15 OVER UPRR AND SR-114 IN LINDON
BENT DETAILS 1
PROJECT NUMBER SP-15-6(52)241

UTAH
COUNTY
C-352W
DRG. NO.

SHT. 21 OF 53

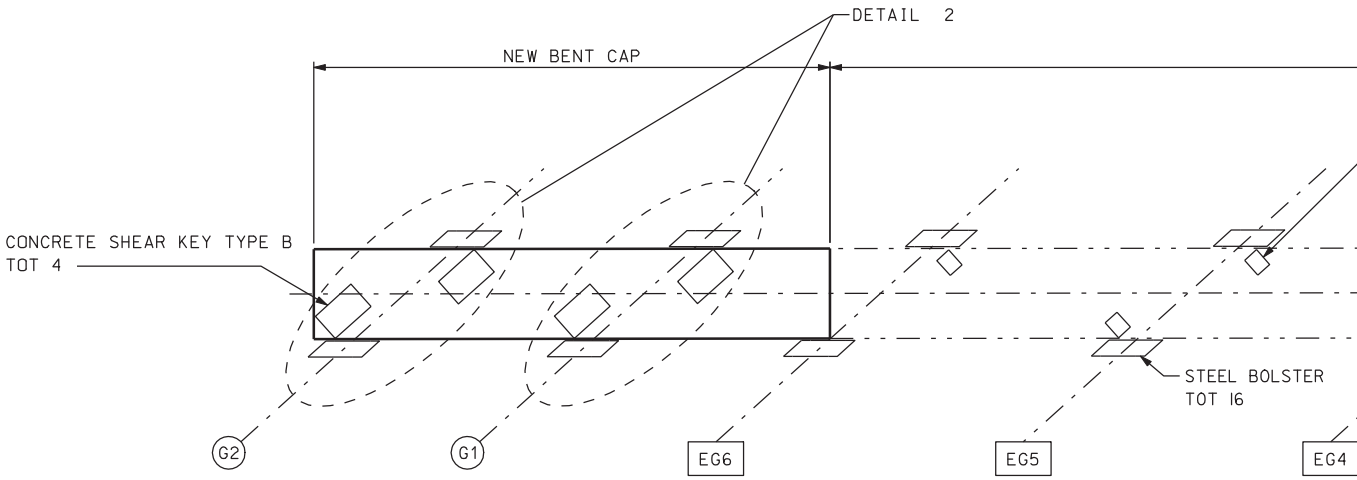


## PLAN - BEN

## NOTES

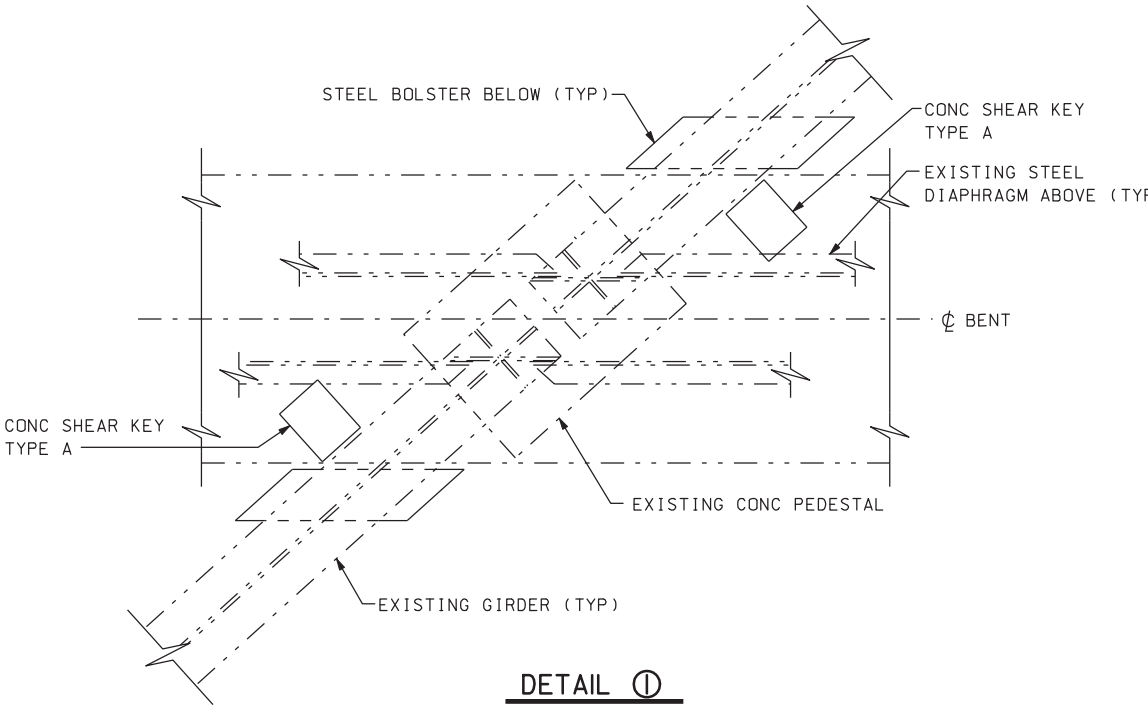


## DETAIL 1

DGN File:IP_PWPcdns1717\4433_C-352-22_BENTDT02.dgn
02-MAY-2005

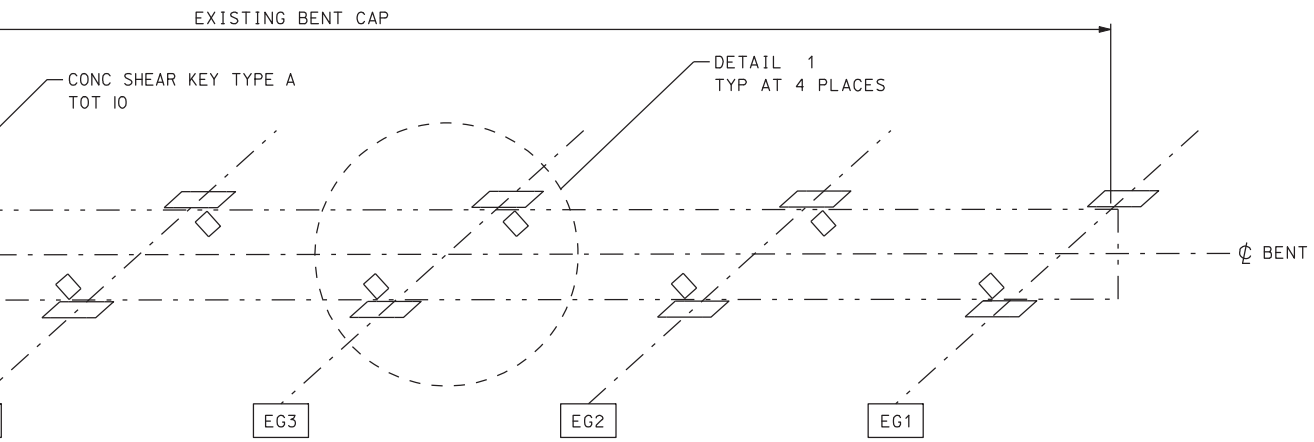


TS 2, 3, 4, &5

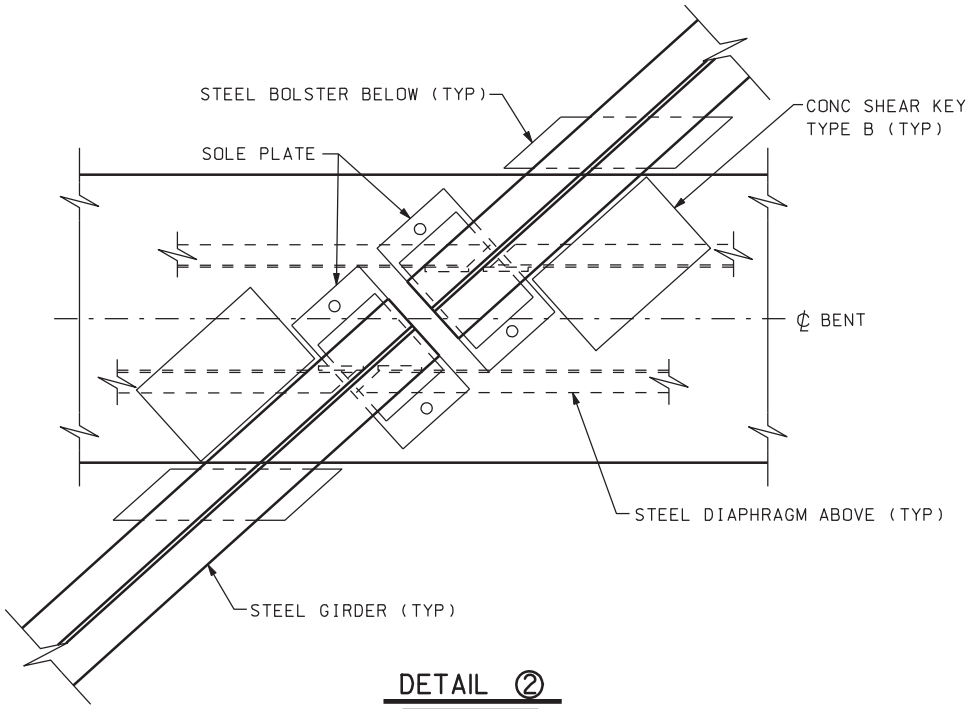


DETAIL ②

| NO. | DATE | BY | REMARKS |
|---|---|---|---|

REVISIONS

UTAH DEPARTMENT OF TRANSPORTATION
SALT LAKE CITY, UTAH
STRUCTURES DIVISION
PARSONS

DESIGN HM 12/04 CHECK MB 01/05
DRAWN TA 12/04 CHECK MB 01/05
QUANT. STB 12/04 CHECK MBD 01/05

APPROVAL RECOMM. DATE SENIOR DESIGN ENGR.
APPROVED FOR USE BY UDOT DATE UDOT BRIDGE ENGR.

I-15; CORRIDOR IN UTAH COUNTY
I-15 OVER UPRR AND SR-114 IN LINDON
BENT DETAILS 2

PROJECT NUMBER SP-15-6(52)241

UTAH
COUNTY

C-352W
DRG. NO.

SHT. 22 OF 53

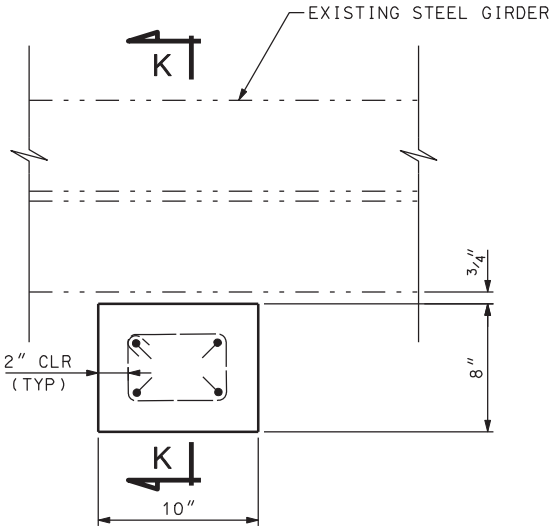


## CONC SHEAR KEY TYPE A

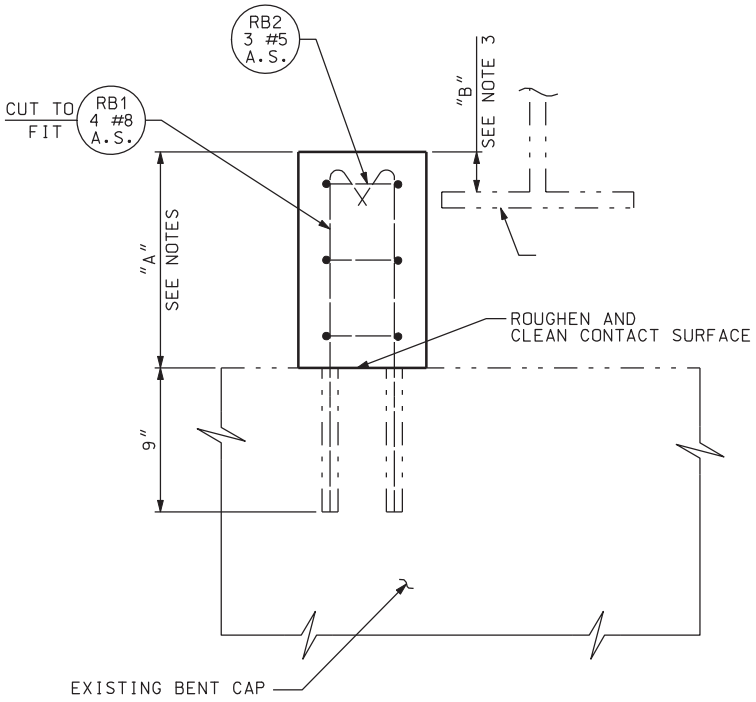


## SECTION K-K

## NOTES

1. DRILL AND BOND #8 DOWELS IN EXISTING BENT CAP. SEE DRILL AND BOND REQUIREMENTS ON "ABUTMENT DETAILS 1" SHEET.
2. DO NOT CUT EXISTING REINF.
3. USE MINIMUM HEIGHT "A" OF 15". INCREASE "A" AS NEEDED SO THAT "B"=4" MINIMUM.

DGN File:IP_PWPcdns1717\4433_C-352-23_BENTDT04.dgn
02-MAY-2005

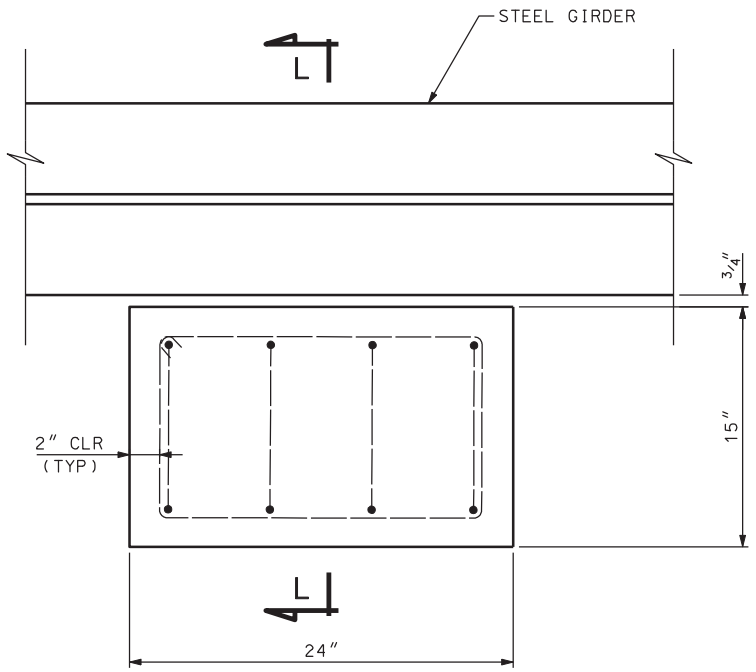


CONC SHEAR KEY TYPE B

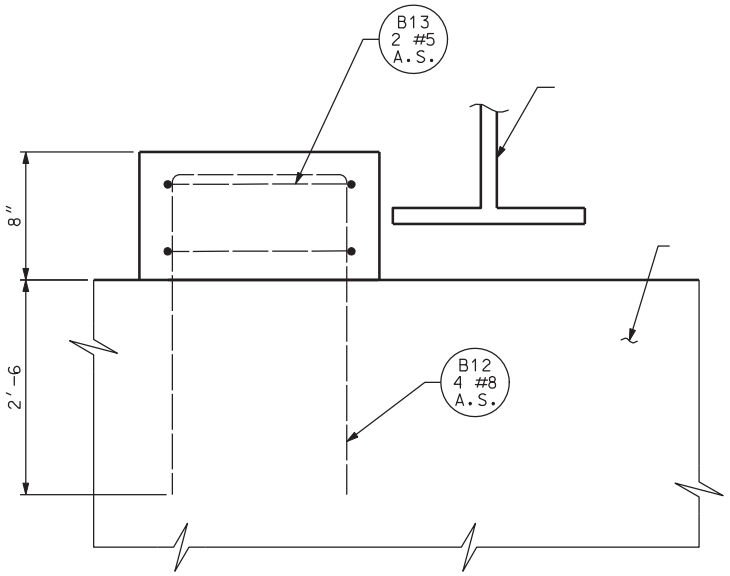


SECTION L-L

| QUANTITIES STRUCTURAL CONCRETE | |
|---|---|
| SHEARKEY A ALL BENTS NB & SB | 2.1 CY |
| SHEARKEY B ALL BENTS NB & SB | 2.0 CY |
| TOTAL | 4.1 CY |

| NO. | DATE | BY | REMARKS |
|---|---|---|---|
| | | | |

REVISIONS

UTAH DEPARTMENT OF TRANSPORTATION
SALT LAKE CITY, UTAH
STRUCTURES DIVISION
PARSONS

DESIGN HM 12/04 CHECK MB 01/05
DRAWN TA 12/04 CHECK MB 01/05
QUANT. STB 12/04 CHECK MBD 01/05

APPROVAL RECOMM. DATE SENIOR DESIGN ENGR.
APPROVED FOR USE BY UDOT DATE UDOT BRIDGE ENGR.

I-15; CORRIDOR IN UTAH COUNTY
I-15 OVER UPRR AND SR-114 IN LINDON
BENT DETAILS 3

PROJECT NUMBER SP-15-6(52)241

UTAH
COUNTY

C-352W
DRG. NO.

SHT. 23 OF 53

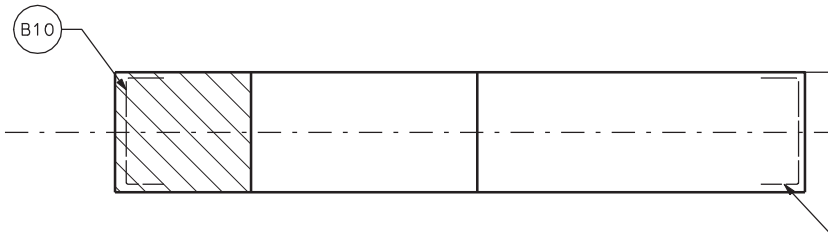


PLAN - BENTS

| NUMBER OF STIRRUPS IN BENT CAP | | | | | |
|---|---|---|---|---|---|
| LOCATION | BAR MARK(S) | BENT 2 | BENT 3 | BENT 4 | BENT 5 |
| A | B5 | 18 | 18 | 18 | 18 |
| B | B6 | 15 | 15 | 16 | 16 |
| C | B7 & B8 | 36 | 36 | 36 | 36 |
| D | B7 & B9 | 30 | 30 | 32 | 32 |
| E | B5 | 17 | 17 | 17 | 17 |
| F | B7 & B8 | 34 | 34 | 34 | 34 |

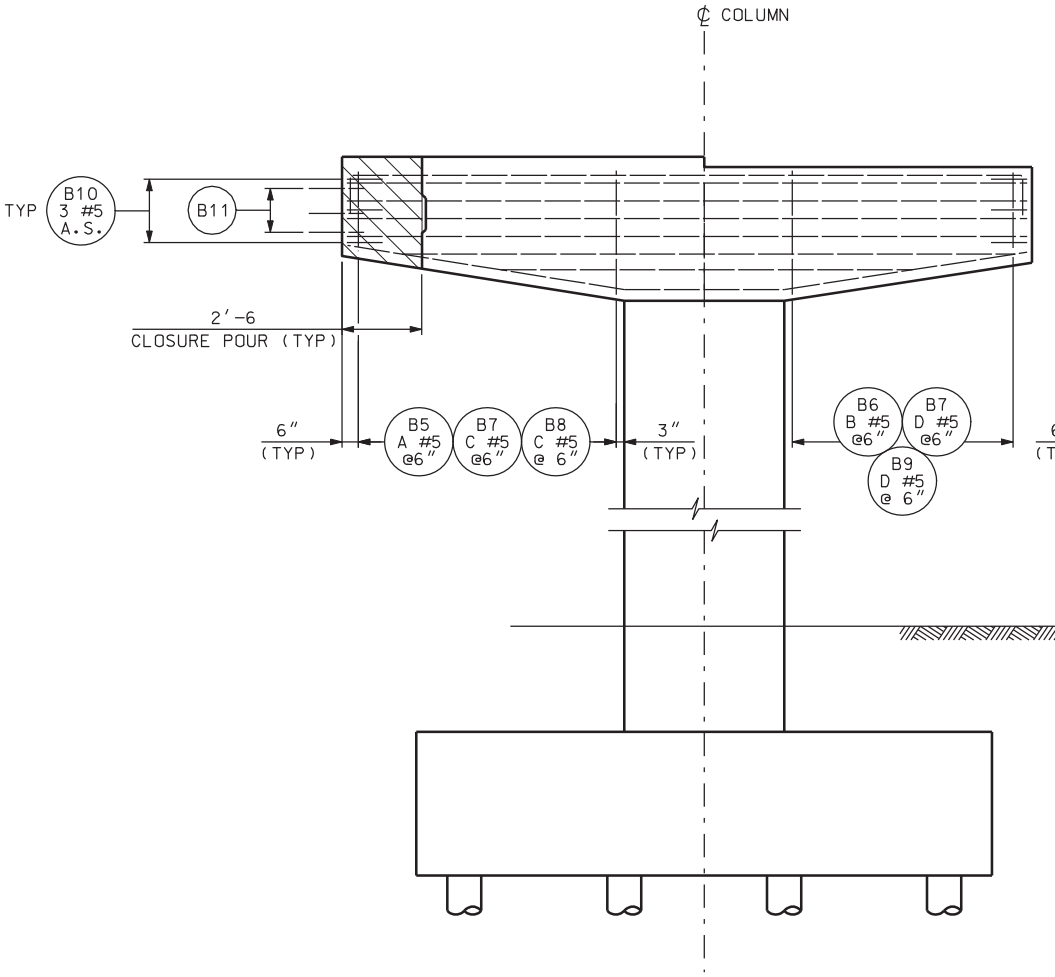


ELEVATION

CAP REINFORCING STEEL SHOW

DGN File:IP_PWPcdms1717\4433_C-352-24_BENT_REINF01.dgn

02-MAY-2005

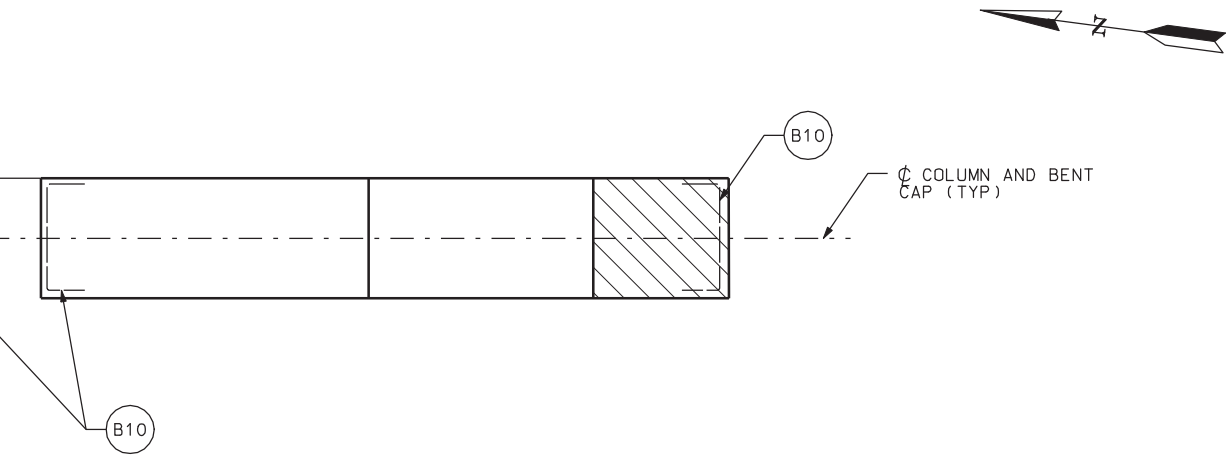


S 2, 3, 4 & 5

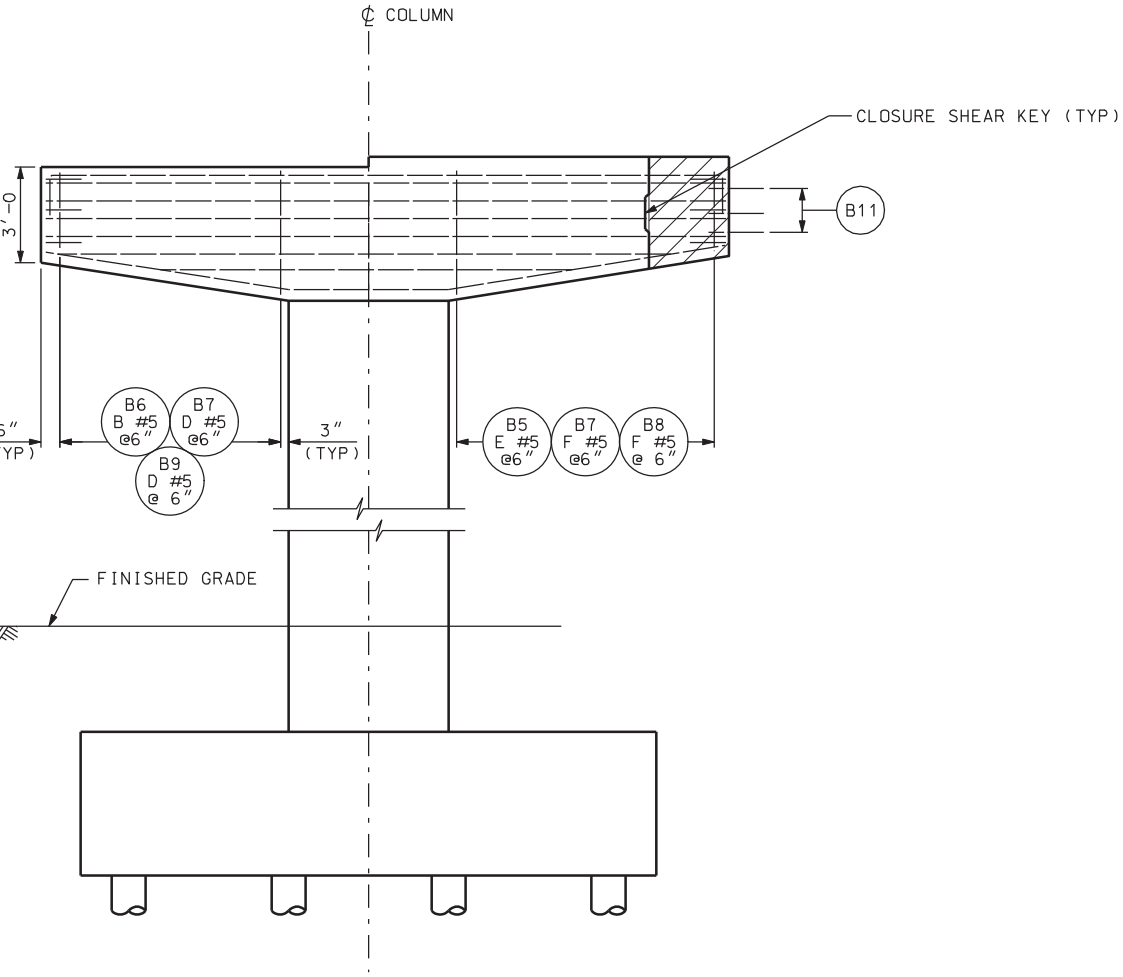


- BENTS 2, 3, 4 & 5

WN FOR NB BENT CAP, SB BENT CAP SIMILAR.

| NO. | DATE | BY | REMARKS |
|---|---|---|---|

REVISIONS

UTAH DEPARTMENT OF TRANSPORTATION
SALT LAKE CITY, UTAH
STRUCTURES DIVISION
PARSONS

DESIGN HM 12/04 CHECK MB 01/05
DRAWN TA 12/04 CHECK MB 01/05
QUANT. STB 12/04 CHECK MBD 01/05

APPROVAL RECOMM. DATE SENIOR DESIGN ENGR.
APPROVED FOR USE BY UDOT DATE UDOT BRIDGE ENGR.

I-15; CORRIDOR IN UTAH COUNTY
I-15 OVER UPRR AND SR-114 IN LINDON
BENT REINFORCEMENT

PROJECT NUMBER SP-15-6(52)241

UTAH
COUNTY

C-352W
DRG. NO.

SHT. 24 OF 53

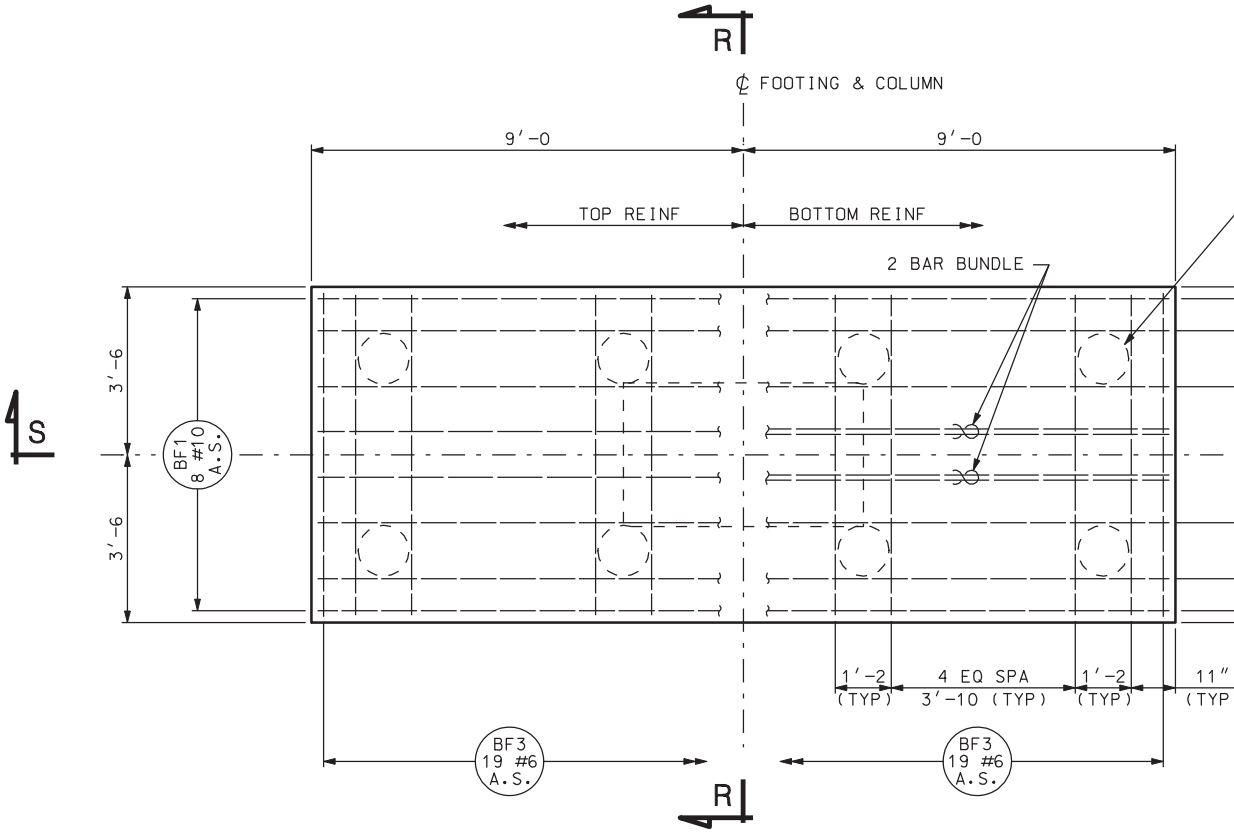


## FOOTING PLAN - BENTS 2, 3, 4 & 5

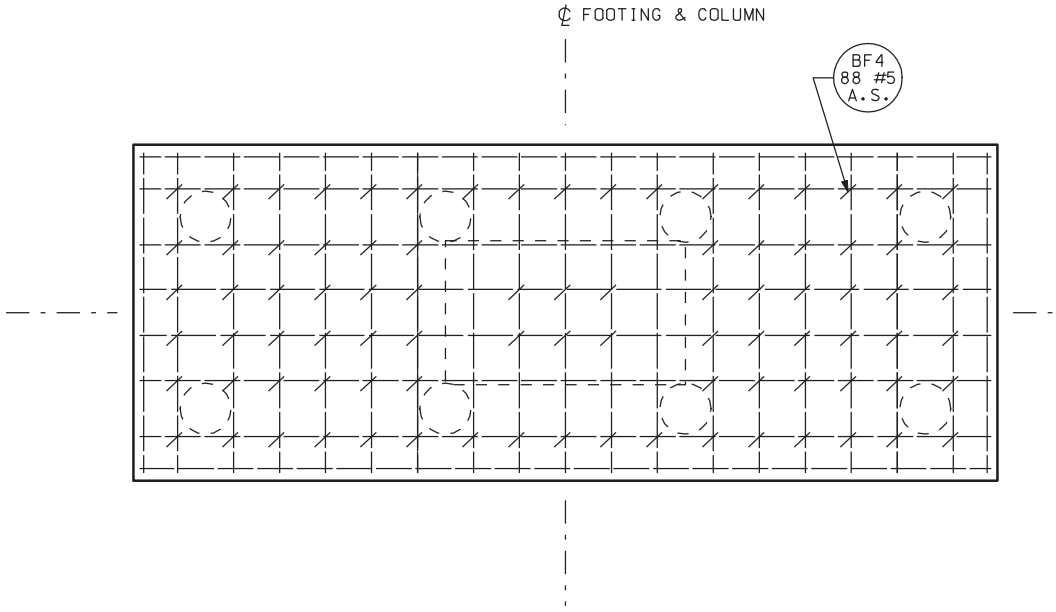


## FOOTING TIE SPACING

TOP REINFORCING SHOWN, HOOK BARS AROUND BOTTOM MAT OF REINFORCING AS SHOWN IN SECTION S-S.

DGN File:IP_PWPcdms1717\4433_C-352-25_BENTFTG01.dgn
02-MAY-2005

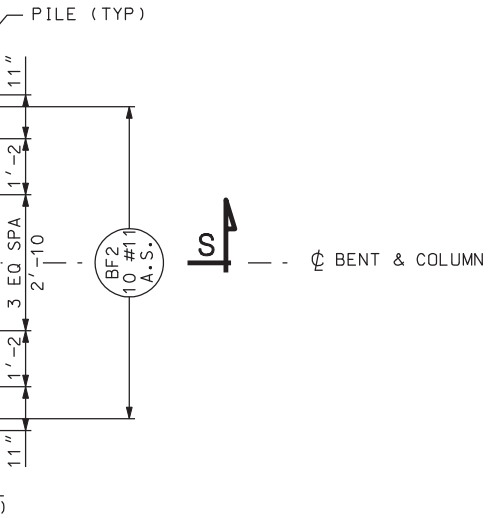


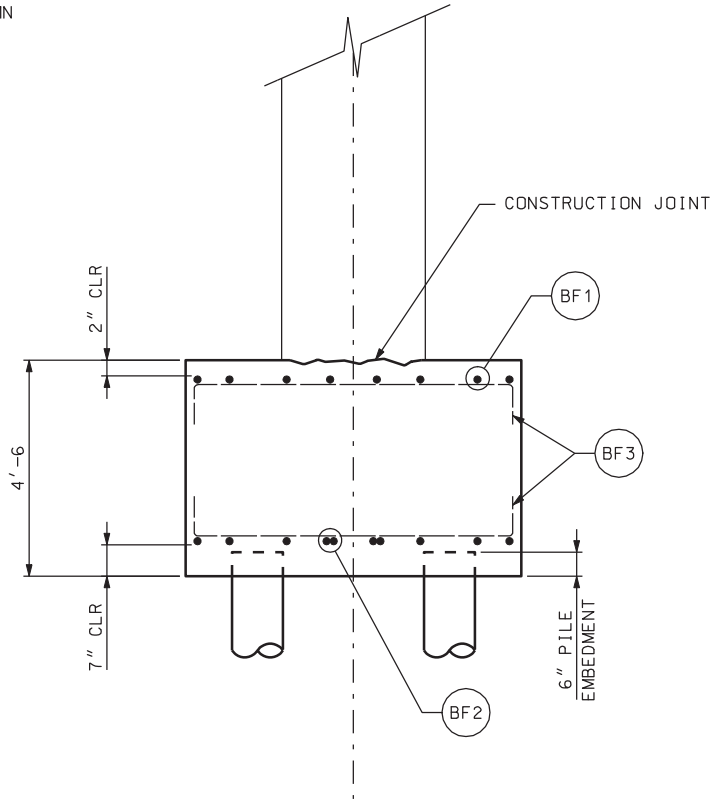


SECTION R-R

℄ BENT COLUMN

## NOTE

SEE "BENT FOOTING DETAILS 2" SHEET FOR SECTION S-S

| NO. | DATE | BY | REMARKS |
|---|---|---|---|

REVISIONS

UTAH DEPARTMENT OF TRANSPORTATION
SALT LAKE CITY, UTAH
STRUCTURES DIVISION
PARSONS

DESIGN HM 12/04 CHECK MB 01/05
DRAWN TA 12/04 CHECK MB 01/05
QUANT. STB 12/04 CHECK MBD 01/05

APPROVAL RECOMM. DATE SENIOR DESIGN ENGR.
APPROVED FOR USE BY UDOT DATE UDOT BRIDGE ENGR.

I-15; CORRIDOR IN UTAH COUNTY
I-15 OVER UPRR AND SR-114 IN LINDON
BENT FOOTING DETAILS 1

PROJECT NUMBER SP-15-6(52)241

UTAH
COUNTY

C-352W
DRG. NO.

SHT. 25 OF 53

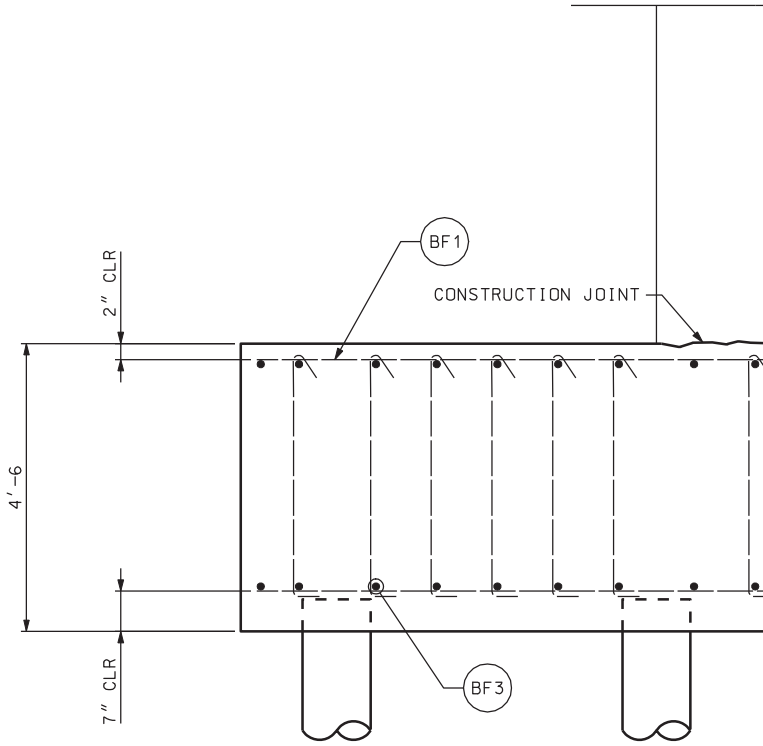


SE

COLUMN AND
NOT SH

02-MAY-2005 DGN File:IP_PWPcdms1717\4433_C-352-26_BENTFTG02.dgn

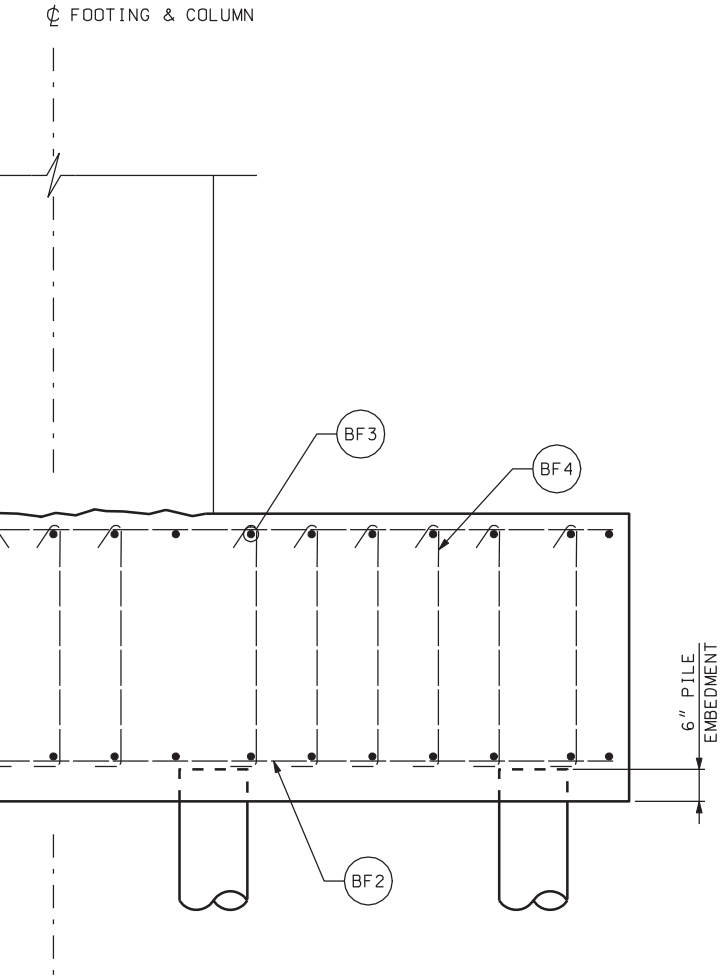


ECTION S-S

PILE REINFORCEMENT
OWN FOR CLARITY

| NO. | DATE | BY | REMARKS |
|---|---|---|---|
| | | | |

REVISIONS

UTAH DEPARTMENT OF TRANSPORTATION
SALT LAKE CITY, UTAH
STRUCTURES DIVISION
PARSONS

DESIGN HM 12/04 CHECK MB 01/05
DRAWN TA 12/04 CHECK MB 01/05
QUANT. STB 12/04 CHECK MBD 01/05

APPROVAL RECOMM. DATE SENIOR DESIGN ENGR.
APPROVED FOR USE BY UDOT DATE UDOT BRIDGE ENGR.

I-15; CORRIDOR IN UTAH COUNTY
I-15 OVER UPRR AND SR-114 IN LINDON
BENT FOOTING DETAILS 2

PROJECT NUMBER SP-15-6(52)241

UTAH
COUNTY

C-352W
DRG. NO.

SHT. 26 OF 53

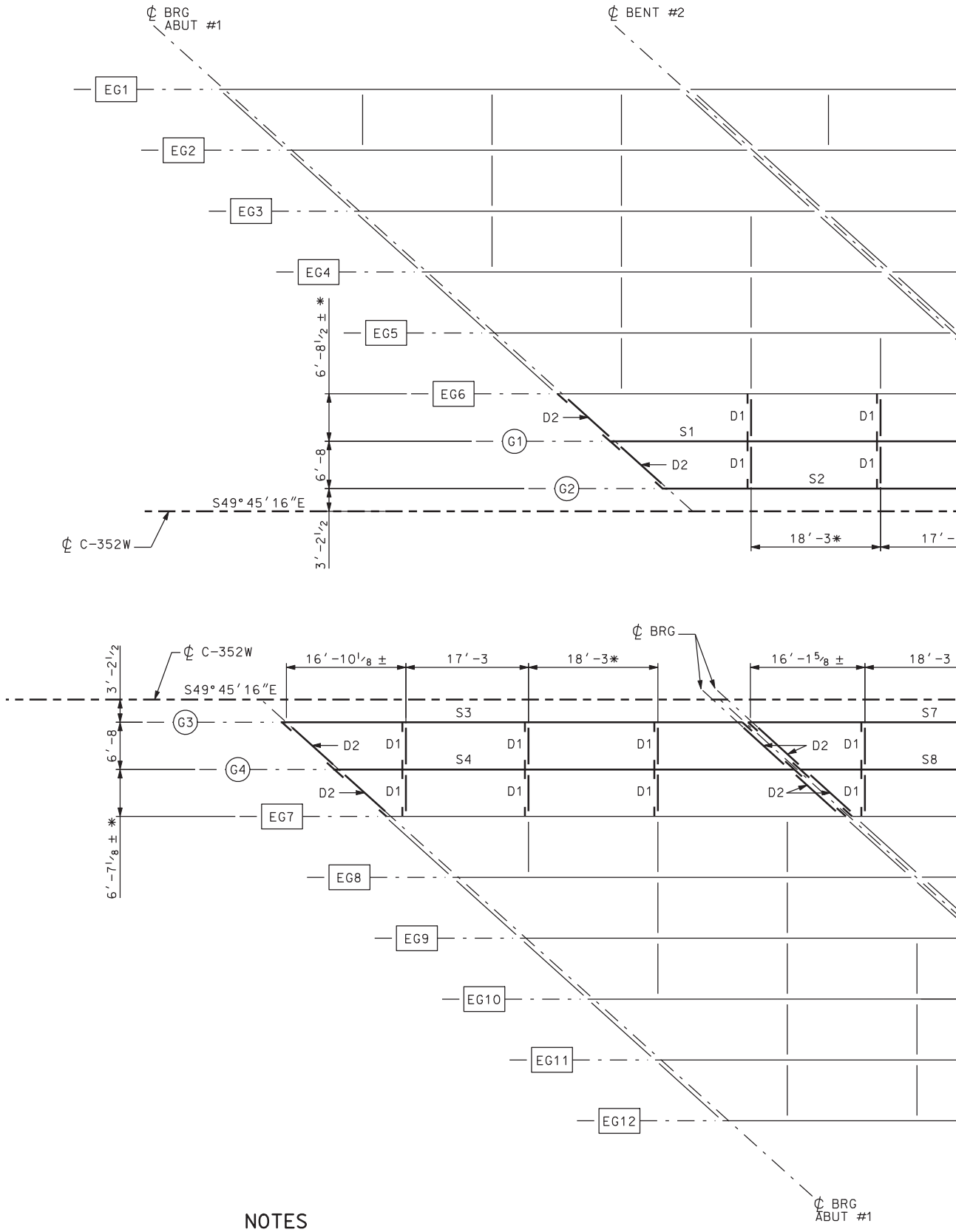


## NOTES

1. (G1) (G2) (G3) (G4) ARE PARALLEL TO ℄ C-352W.
2. SEE "GIRDER DETAILS" SHEET FOR GIRDER ELEVATION, GIRDER LENGTHS, AND GENERAL NOTES.
3. SEE "DIAPHRAGM DETAILS 1" SHEET FOR DIAPHRAGM LAYOUT.

## FRAMING

DGN File:IP_PWPcdms1717\4433_C-352-27_FRAM01.dgn
02-MAY-2005

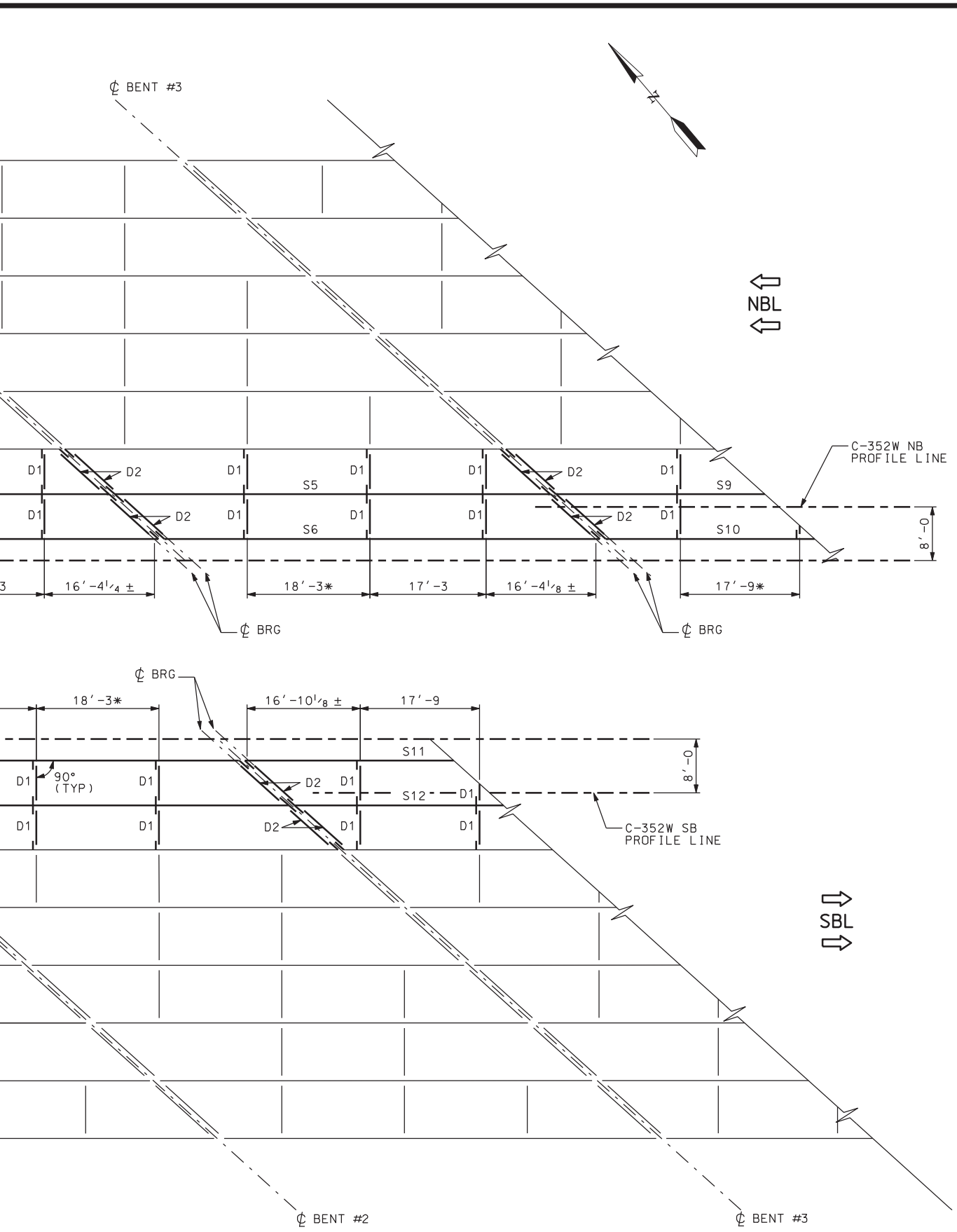


G PLAN

* FIELD VERIFY EXISTING DIAPHRAGM LOCATION. LINE UP NEW DIAPHRAGM WITH EXISTING DIAPHRAGMS.

EG1 — - — - · EXISTING GIRDER MARK NUMBER

G1 — - — - — NEW GIRDER MARK NUMBER

| NO. | DATE | BY | REMARKS |
|---|---|---|---|

REVISIONS

UTAH DEPARTMENT OF TRANSPORTATION
SALT LAKE CITY, UTAH
STRUCTURES DIVISION

PARSONS

DESIGN HM 12/04 CHECK MBD 01/05
DRAWN TA 12/04 CHECK MBD 01/05
QUANT. STB 12/04 CHECK MBD 01/05

APPROVAL RECOMM. DATE SENIOR DESIGN ENGR.
APPROVED FOR USE BY UDOT DATE UDOT BRIDGE ENGR.

I-15; CORRIDOR IN UTAH COUNTY
I-15 OVER UPRR AND SR-114 IN LINDON
FRAMING PLAN 1

PROJECT NUMBER SP-15-6(52)241

UTAH
COUNTY

C-352W
DRG. NO.

SHT. 27 OF 53

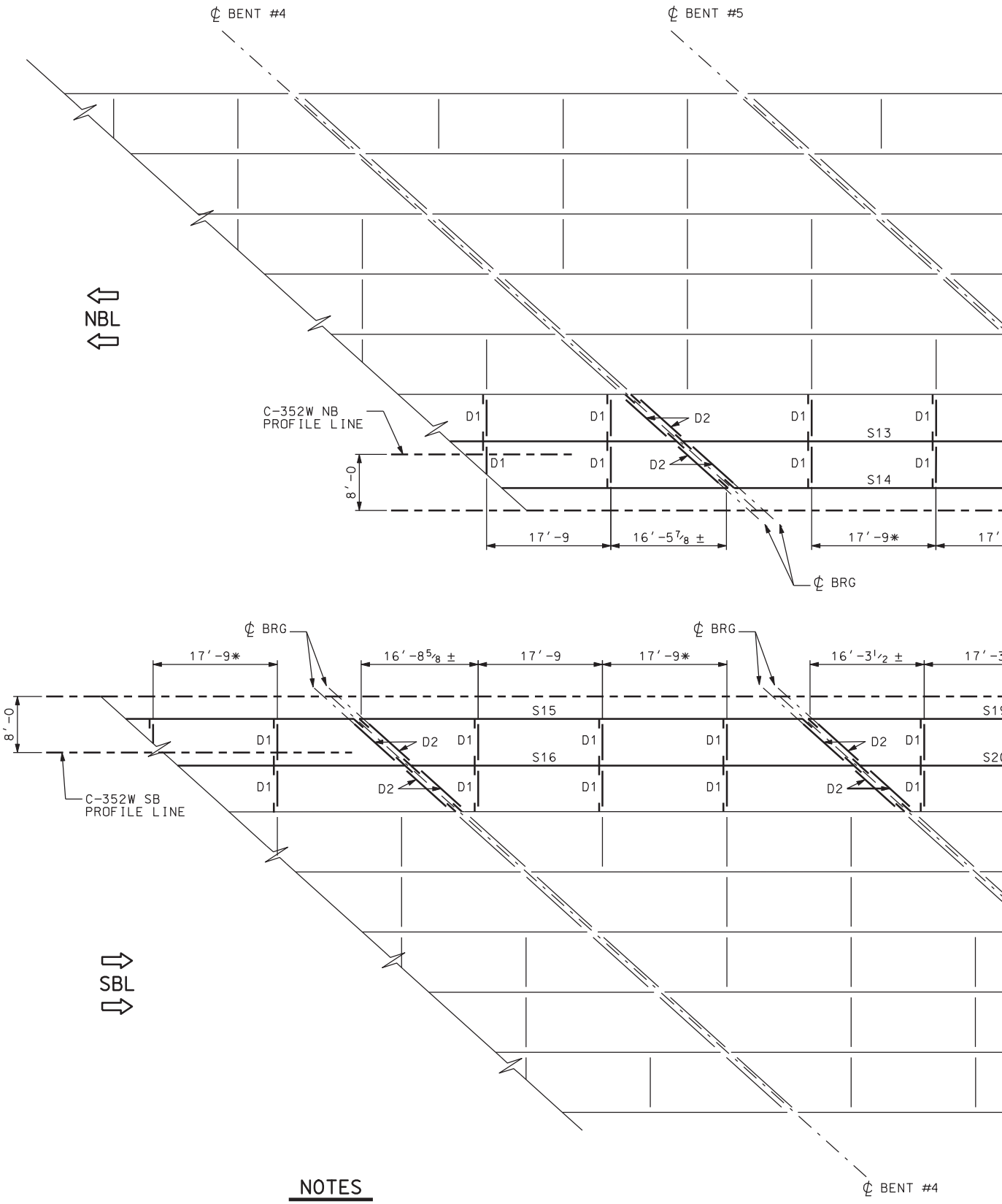


## NOTES

1. (G1) (G2) (G3) (G4) ARE PARALLEL TO ℄ C-352W.
2. SEE "GIRDER DETAILS" SHEET FOR GIRDER ELEVATION, GIRDER LENGTHS, AND GENERAL NOTES.
3. SEE "DIAPHRAGM DETAILS 1" SHEET FOR DIAPHRAGM LAYOUT.

FRAMING

DGN File:IP_PWPcdms1717\4433_C-352-28_FRAM02.dgn

02-MAY-2005

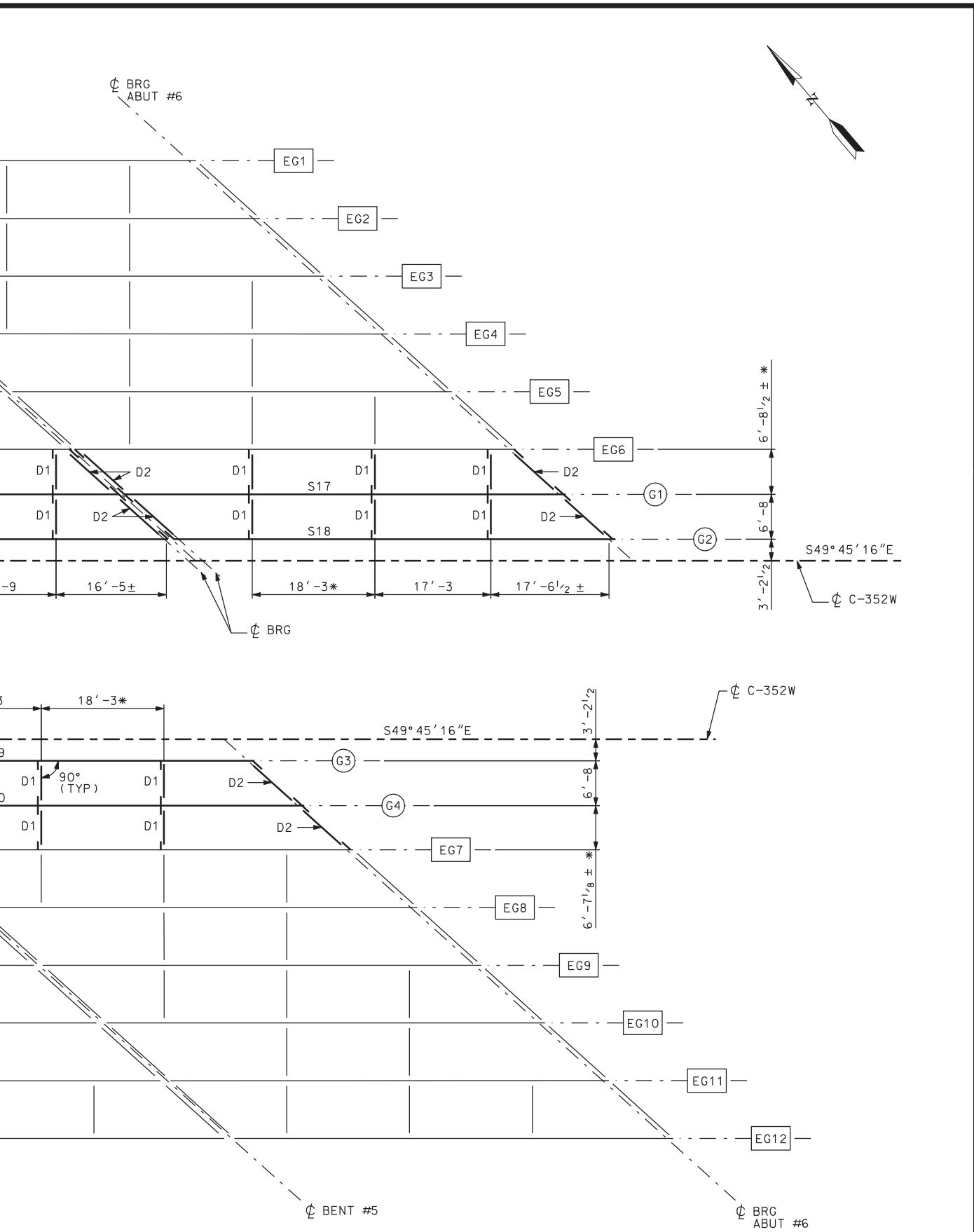


G PLAN

* FIELD VERIFY EXISTING DIAPHRAGM LOCATION. LINE UP NEW DIAPHRAGM WITH EXISTING DIAPHRAGMS.

EG1 — EXISTING GIRDER MARK NUMBER

G1 — NEW GIRDER MARK NUMBER

| NO. | DATE | BY | REMARKS |
|---|---|---|---|

REVISIONS

UTAH DEPARTMENT OF TRANSPORTATION
SALT LAKE CITY, UTAH
STRUCTURES DIVISION

PARSONS

DESIGN HM 12/04 CHECK MBD 01/05
DRAWN TA 12/04 CHECK MBD 01/05
QUANT. STB 12/04 CHECK MBD 01/05

APPROVAL RECOMM. DATE SENIOR DESIGN ENGR.
APPROVED FOR USE BY UDOT DATE UDOT BRIDGE ENGR.

I-15; CORRIDOR IN UTAH COUNTY
I-15 OVER UPRR AND SR-114 IN LINDON
FRAMING PLAN 2

PROJECT NUMBER SP-15-6(52)241

UTAH
COUNTY

C-352W
DRG. NO.

SHT. 28 OF 53

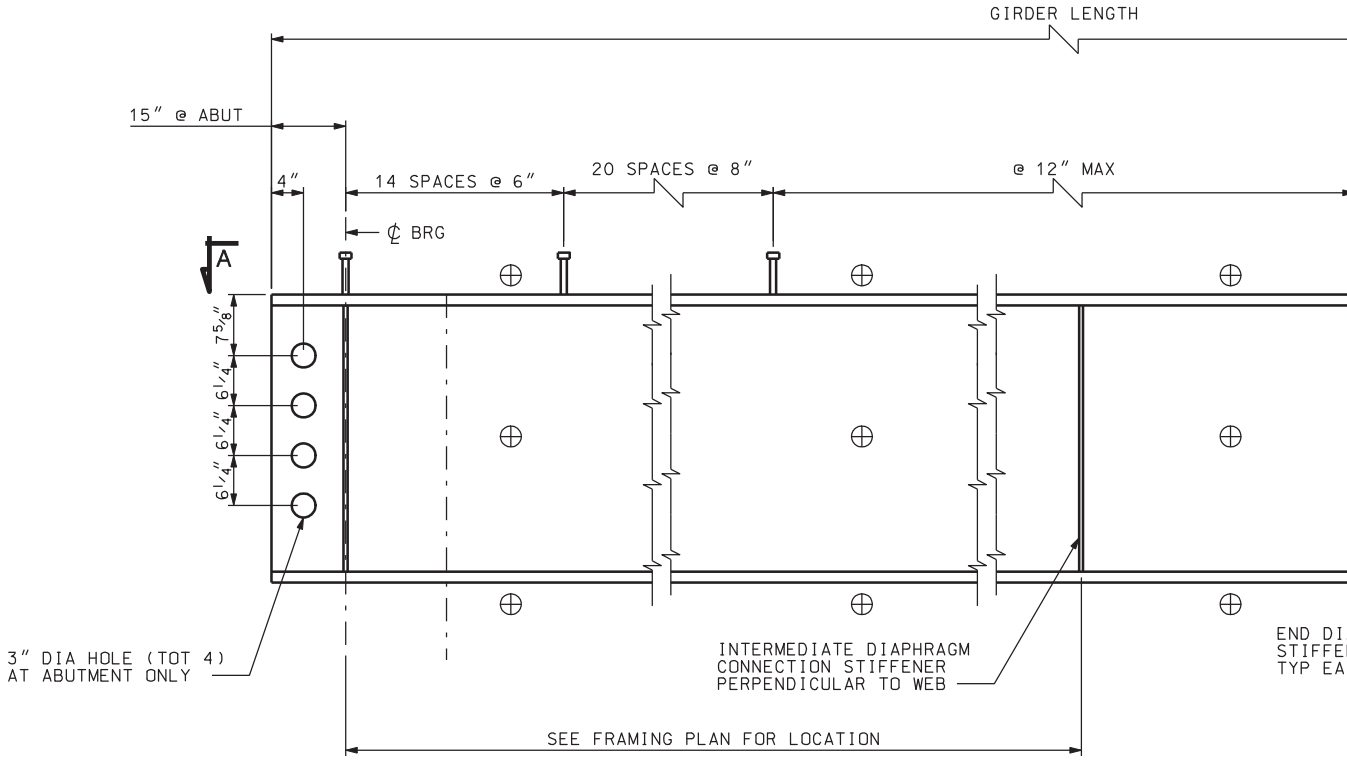


## GIRDER ELEVATION

W36x182 GIRDER

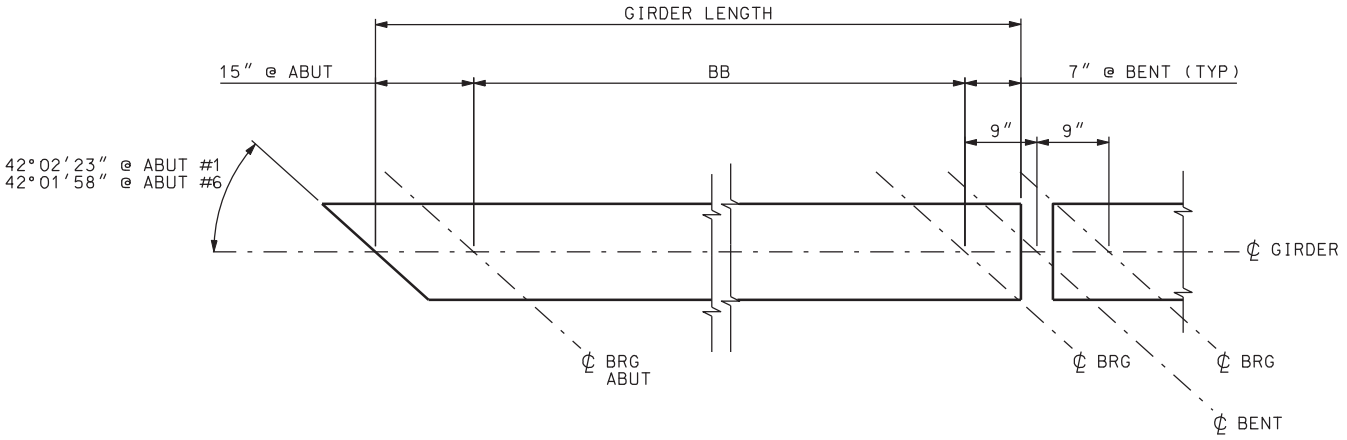


## SECTION A-A

DGN File: IP_PWPcdnsl1717\4433_C-352-29_STEEL01.dgn

02-MAY-2005

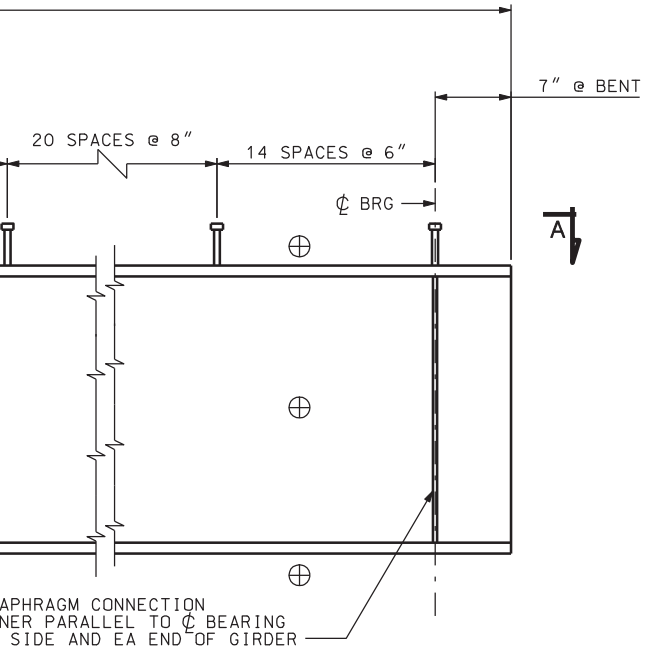


| GIRDER | GIRDER LENGTH * | BB * |
|---|---|---|
| S1 | 65′-9 1/2 | 63′-11 1/2 |
| S2 | 65′-9 | 63′-11 |
| S3 | 65′-8 5/8 | 63′-10 5/8 |
| S4 | 65′-8 1/4 | 63′-10 1/4 |
| S5 | 65′-3 1/2 | 64′-1 1/2 |
| S6 | 65′-4 | 64′-2 |
| S7 | 65′-4 1/2 | 64′-2 1/2 |
| S8 | 65′-5 | 64′-3 |
| S9 | 63′-11 | 62′-9 |
| S10 | 63′-11 3/8 | 62′ 9 3/8 |
| S11 | 63′-11 3/4 | 62′-9 3/4 |
| S12 | 64′-0 | 62′-10 |
| S13 | 63′-9 1/4 | 62′-7 1/4 |
| S14 | 63′-9 1/4 | 62′-7 1/4 |
| S15 | 63′-9 1/4 | 62′-7 1/4 |
| S16 | 63′-9 1/4 | 62′-7 1/4 |
| S17 | 66′-2 | 64′-4 |
| S18 | 66′-1 5/8 | 64′-3 5/8 |
| S19 | 66′-1 1/4 | 64′-3 1/4 |
| S20 | 66′-0 3/4 | 64′-2 3/4 |

* SEE GENERAL NOTE 6 ON "SITUATION & LAYOUT 1" SHEET

## NOTES

1. ERECT THE GIRDERS WITH THE NATURAL CAMBER UP.
2. PERFORM CHARPY V-NOTCH TOUGHNESS TEST ON ALL MAIN LOAD CARRYING MEMBERS, INDICATED BY ⊕, TO MEET REQUIREMENTS FOR ZONE 2.
3. ALL DIMENSIONS SHOWN ARE HORIZONTAL. ADJUST LENGTHS AS NECESSARY IN FABRICATION TO TAKE VERTICAL GRADE INTO ACCOUNT.
4. ALL INTERMEDIATE DIAPHRAGMS ARE NORMAL TO THE WEB. BEARING STIFFENERS ARE PARALLEL TO THE CENTERLINE OF BEARINGS.
5. CENTERLINES OF GIRDERS ARE PARALLEL TO CENTERLINE C-352W.
6. INCLUDE THE PRICE FOR SHEAR STUDS, BOLTS AND STIFFENERS IN THE CONTRACT PRICE FOR STRUCTURAL STEEL.
7. SEE "BEARING DETAILS" SHEET FOR SOLE PLATE AND BEARING DETAILS.
8. USE STRUCTURAL STEEL CONFORMING TO AASHTO M270 GRADE 50 FOR STEEL GIRDERS. ALL OTHER STEEL GRADE 36 MINIMUM EXCEPT WHERE NOTED OTHERWISE.
9. CONFORM WELDING, WELDER QUALIFICATIONS, PREQUALIFICATION OF WELD DETAILS AND INSPECTION OF WELDS TO THE REQUIREMENTS OF THE ANSI/AASHTO/AWS BRIDGE WELDING CODE D1.5.
10. THE METHODS OF JOINT PREPARATION FOR WELDING SHOWN ON THE PLANS ARE BASED ON THE USE OF MANUAL SHIELDED METAL-ARC WELDING. THE USE OF THIS OR ANY OTHER WELDING PROCESS WILL BE SATISFACTORY ONLY AFTER THE WELDING PROCEDURE HAS BEEN SUBMITTED BY THE CONTRACTOR AND APPROVED BY THE ENGINEER.
11. USE THE MINIMUM SIZED STRENGTH FILLET WELDS REQUIRED BY ANSI/AASHTO/AWS BRIDGE WELDING CODE D1.5 FOR THE THICKNESS OF THE MATERIAL JOINED UNLESS OTHERWISE SPECIFIED. USE MINIMUM FILLET WELD SIZE OF 1/4″, EXCEPT WHERE NOTED OTHERWISE.
12. DIMENSIONS SHOWN ON THE PLANS ASSUME THE AMBIENT TEMPERATURE OF THE GIRDER TO BE 70°F . CORRECT THE LENGTH USED IN FABRICATION AT THE RATE OF 1/16″ PER EACH 100′ OF LENGTH FOR EVERY 10°F DIFFERENCE IN TEMPERATURE TO ALLOW FOR EXPANSION AND CONTRACTION.
13. DO NOT FIELD WELD TO GIRDERS EXCEPT WHERE NOTED OTHERWISE.
14. ALL BOLTED CONNECTIONS SHALL BE MADE WITH 7/8″ DIA. HIGH STRENGTH BOLTS CONFORMING TO ASTM A325, TYPE 1, UNLESS NOTED OTHERWISE.
15. DIMENSIONS MAY VARY DUE TO EXISTING STRUCTURE DIMENSIONS. CONTRACTOR TO VERIFY ALL CONTROLLING DIMENSIONS PRIOR TO FABRICATION

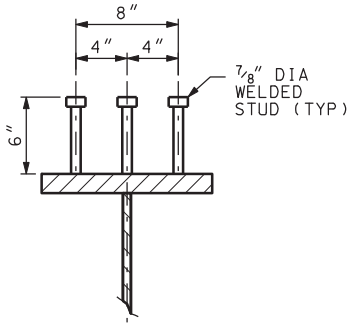


SHEAR STUD DETAIL

| QUANTITIES STRUCTURAL STEEL | |
|---|---|
| NB & SB GIRDERS | 248,755 LBS |

| NO. | DATE | BY | REMARKS |
|---|---|---|---|
| | | | |

REVISIONS

UTAH DEPARTMENT OF TRANSPORTATION
SALT LAKE CITY, UTAH
STRUCTURES DIVISION
PARSONS

DESIGN HM 12/04 CHECK MBD 01/05
DRAWN TA 12/04 CHECK MBD 01/05
QUANT. CHECK MBD 01/05

APPROVAL RECOMM. DATE SENIOR DESIGN ENGR.
APPROVED FOR USE BY UDOT DATE UDOT BRIDGE ENGR.

I-15; CORRIDOR IN UTAH COUNTY
I-15 OVER UPRR AND SR-114 IN LINDON
GIRDER DETAILS
PROJECT NUMBER SP-15-6(52)241

UTAH COUNTY
C-352W DRG. NO.
SHT. 29 OF 53

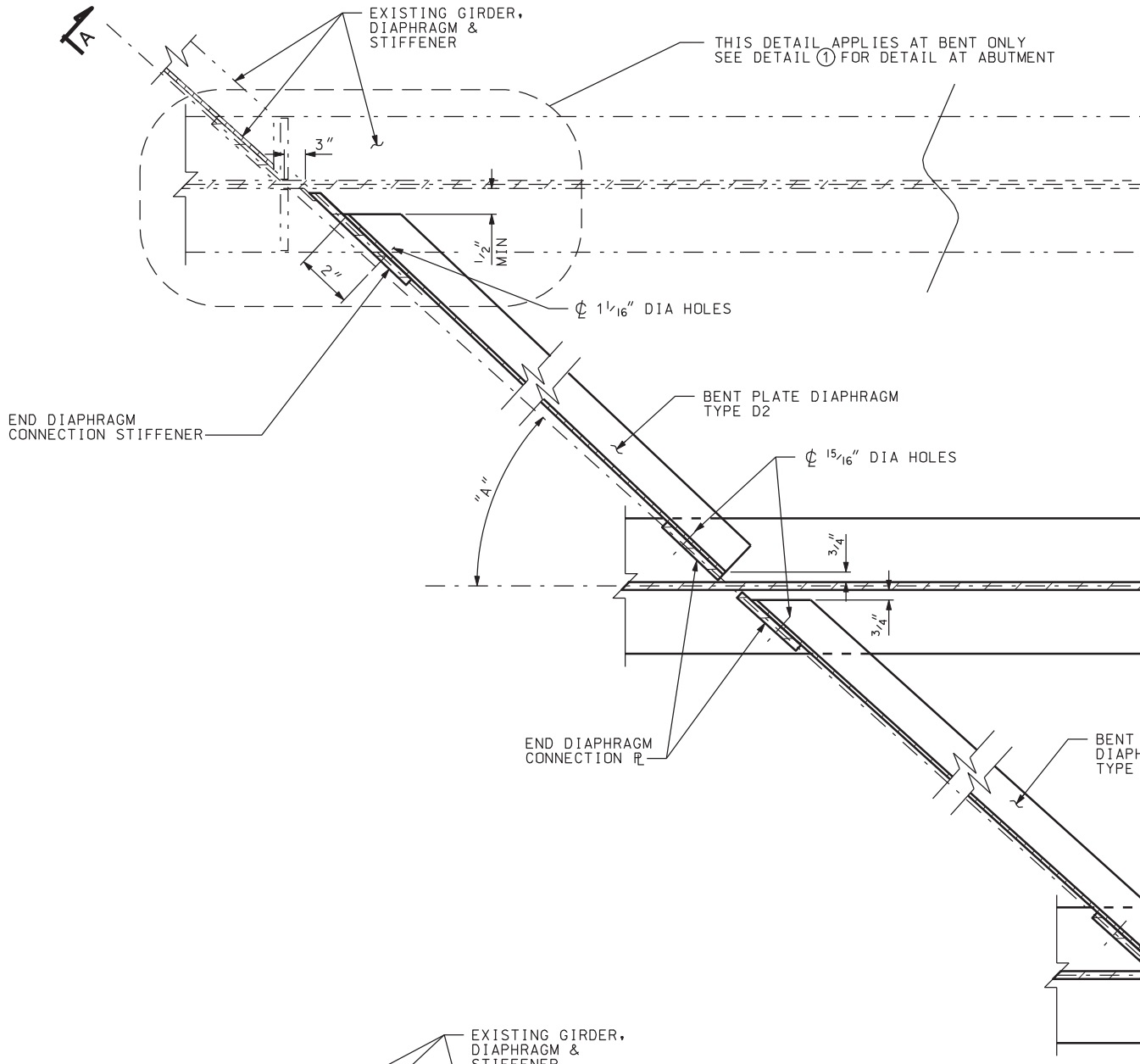


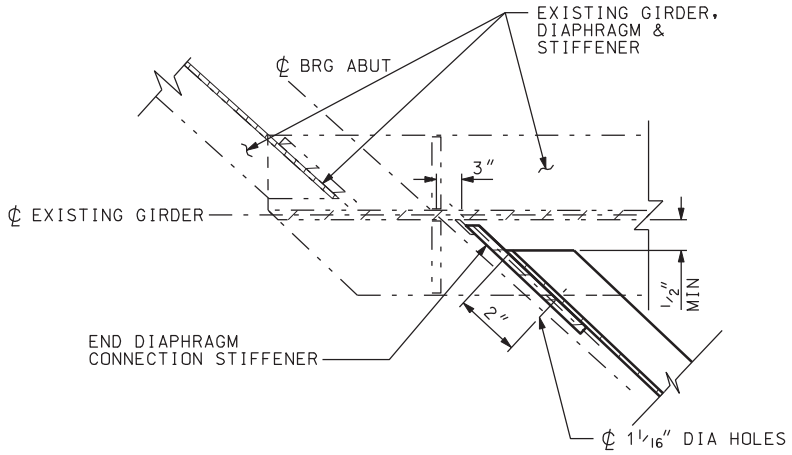


DETAIL 1

DIAPHRAG

NOTE: G1 AND G2 SHOWN. G3

DGN File: IP_PWPcdms1717\4433_C-352-30_STEEL02.dgn

02-MAY-2005

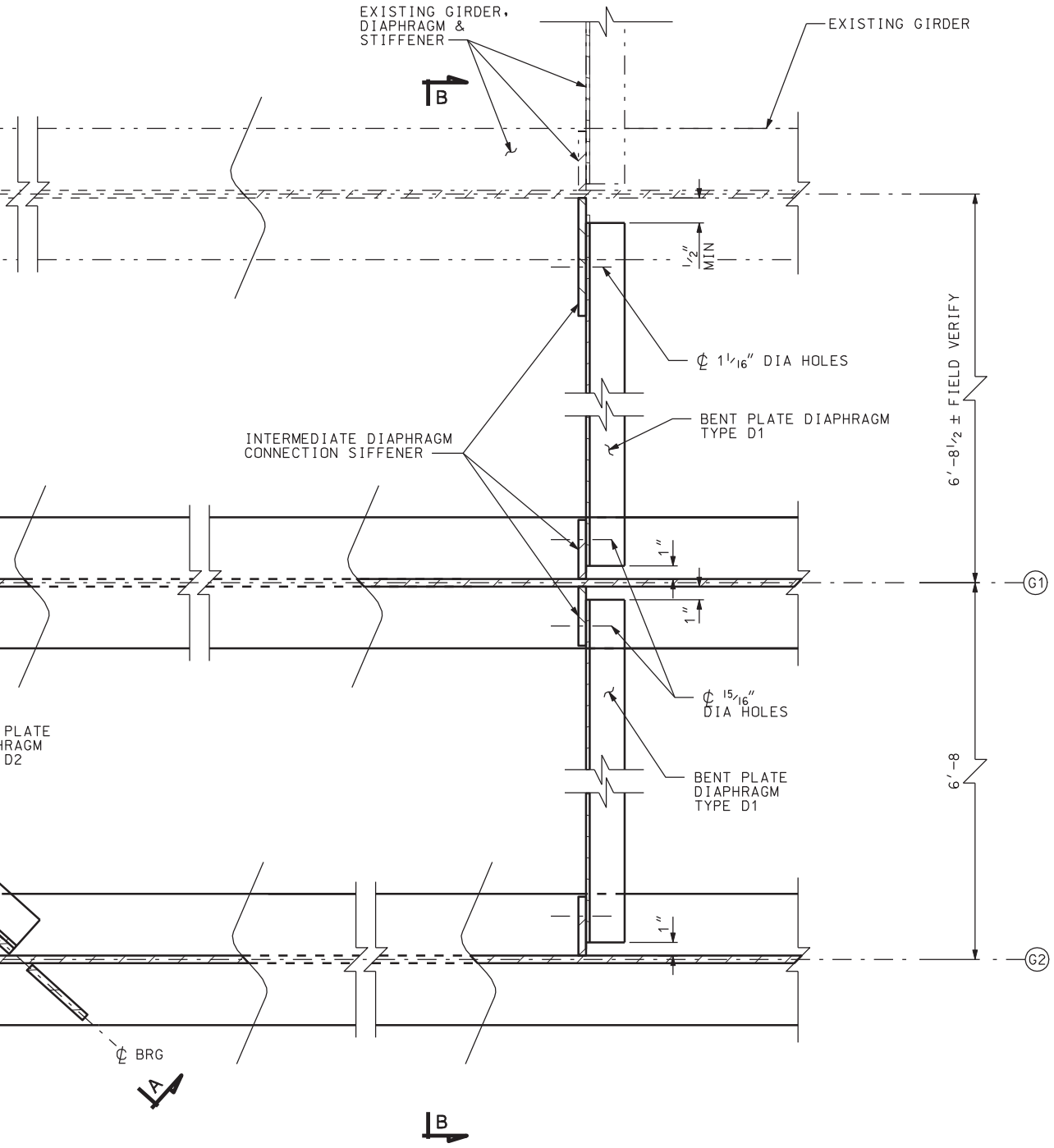


M

) AND (G4) SIMILAR.

| | "A" |
|---|---|
| ABUT 1 | 42°02'23" |
| BENT 2 | 42°10'12" |
| BENT 3 | 42°00'08" |
| BENT 4 | 41°53'23" |
| BENT 5 | 41°53'45" |
| ABUT 6 | 42°01'58" |

SEE "SITUATION & LAYOUT 1" SHEET GENERAL NOTE 6

## NOTES

1. SEE "FRAMING PLAN" SHEET FOR DIAPHRAGM LOCATIONS.
2. SEE "GIRDER DETAILS" SHEET FOR GENERAL NOTES.
3. SEE "DIAPHRAGM DETAILS 2" SHEET FOR SECTION A-A.
4. SEE "DIAPHRAGM DETAILS 3" FOR SECTION B-B.

| NO. | DATE | BY | REMARKS |
|---|---|---|---|

REVISIONS

UTAH DEPARTMENT OF TRANSPORTATION
SALT LAKE CITY, UTAH
STRUCTURES DIVISION
PARSONS

DESIGN HM 12/04 CHECK MBD 01/05
DRAWN TA 12/04 CHECK MBD 01/05
QUANT. STB 12/04 CHECK MBD 01/05

APPROVAL RECOMM. DATE SENIOR DESIGN ENGR.
APPROVED FOR USE BY UDOT DATE UDOT BRIDGE ENGR.

I-15; CORRIDOR IN UTAH COUNTY
I-15 OVER UPRR AND SR-114 IN LINDON
DIAPHRAGM DETAILS 1

PROJECT NUMBER SP-15-6(52)241

UTAH
COUNTY

C-352W
DRG. NO.

SHT. 30 OF 53

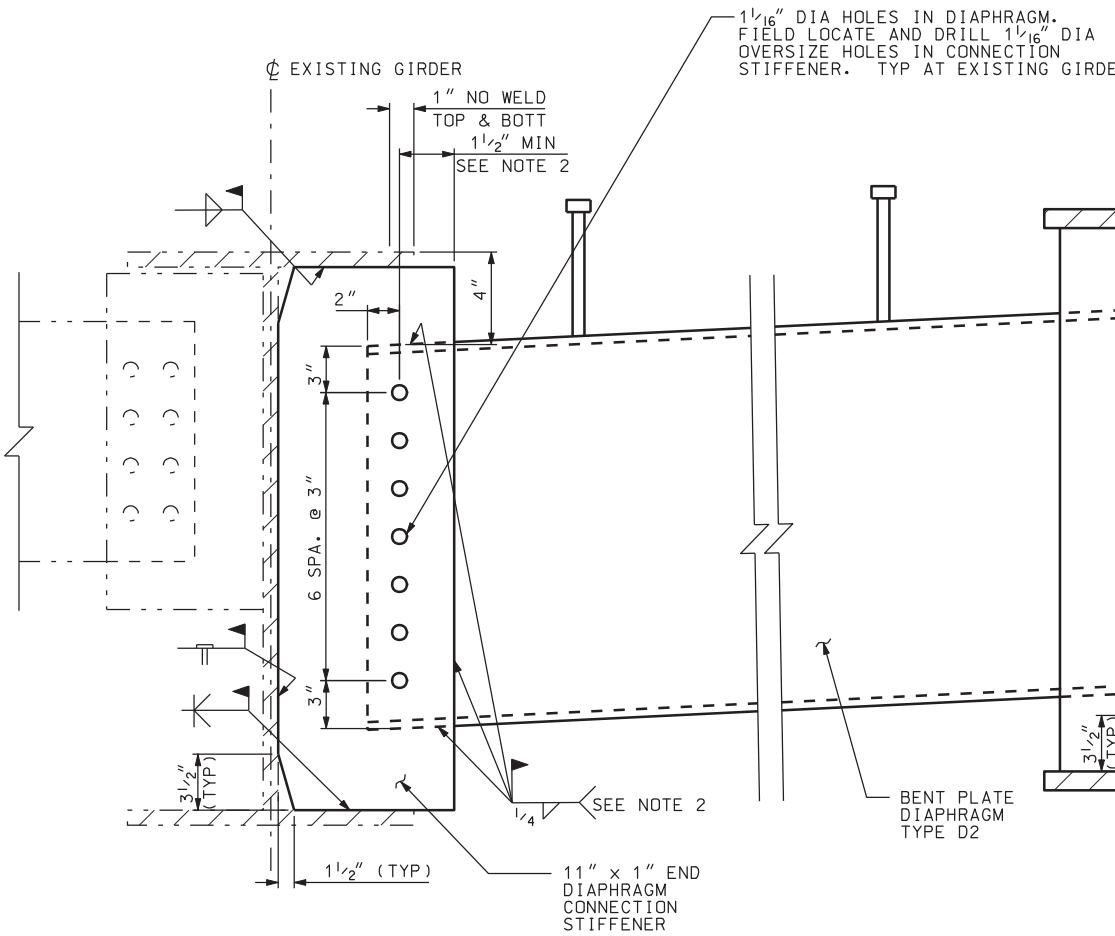


SEC

DGN File:IP_PWPcdnsl717\4433_C-352-31_STEEL03.dgn

02-MAY-2005

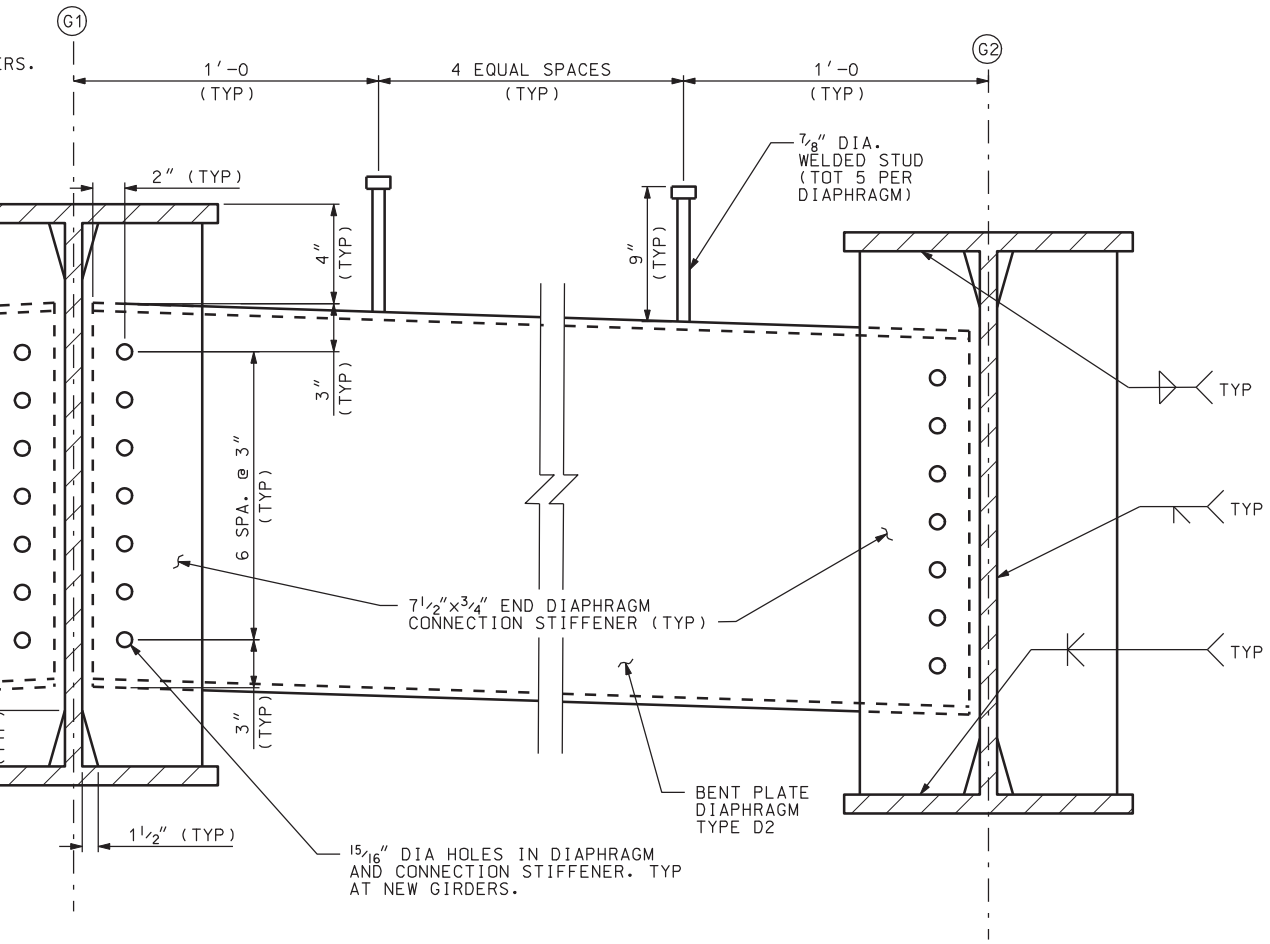


CTION A-A

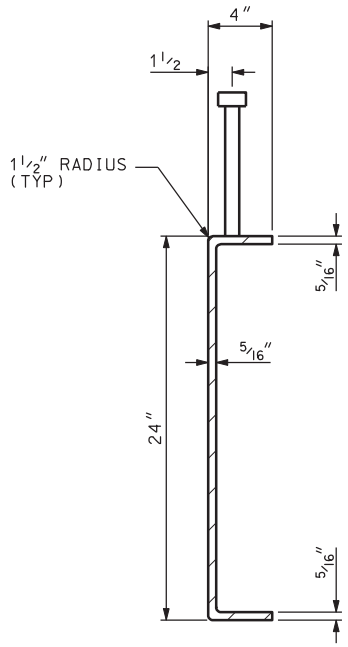


BENT PLATE DIAPHRAGM DETAIL

## NOTES

1. SEE NOTES ON "DIAPHRAGM DETALS 1".
2. IF THE EDGE DISTANCE EXCEEDS 2", FIELD WELD THE END DIAPHRAGM CONNECTION STIFFENER AFTER THE DECK SLAB CLOSURE POUR IS IN PLACE.

| QUANTITIES STRUCTURAL STEEL | |
|---|---|
| NB & SB "D2" DIAPHRAGMS | 13,394 LBS |

| NO. | DATE | BY | REMARKS |
|---|---|---|---|
| | | | |

REVISIONS

UTAH DEPARTMENT OF TRANSPORTATION
SALT LAKE CITY, UTAH
STRUCTURES DIVISION
PARSONS

DESIGN HM 12/04 CHECK MBD 01/05
DRAWN TA 12/04 CHECK MBD 01/05
QUANT. STB 12/04 CHECK MBD 01/05

APPROVAL RECOMM. DATE SENIOR DESIGN ENGR.
APPROVED FOR USE BY UDOT DATE UDOT BRIDGE ENGR.

I-15; CORRIDOR IN UTAH COUNTY
I-15 OVER UPRR AND SR-114 IN LINDON
DIAPHRAGM DETAILS 2
PROJECT NUMBER SP-15-6(52)241

UTAH
COUNTY

C-352W
DRG. NO.

SHT. 31 OF 53

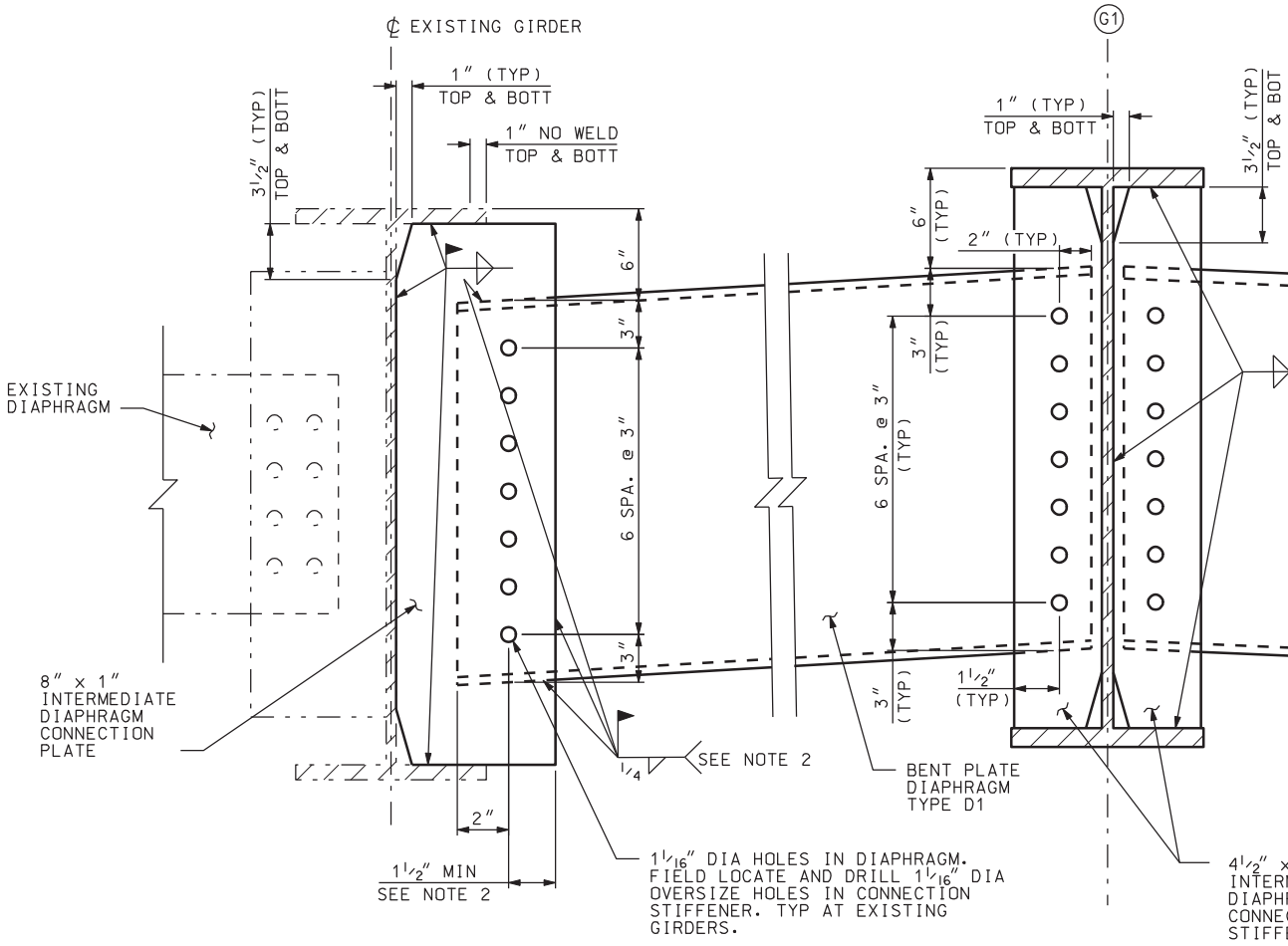


## SECTION B-B

DGN File: IP_PWPcdms1717\4433_C-352-32_STEEL04.dgn

02-MAY-2005

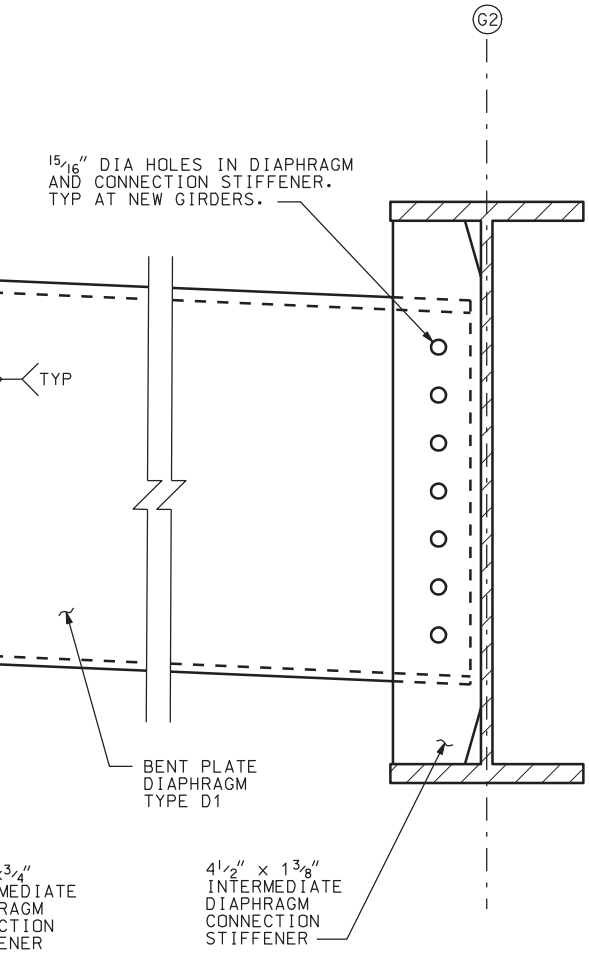


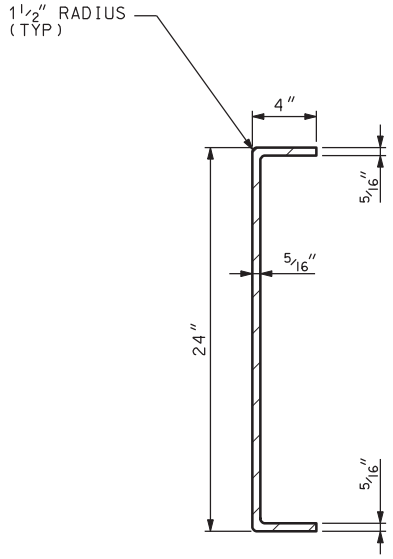


## BENT PLATE DIAPHRAGM DETAIL

## NOTES

1. SEE NOTES ON "DIAPHRAGM DETAILS 1".
2. IF THE EDGE DISTANCE EXCEEDS 2", FIELD WELD THE INTERMEDIATE DIAPHRAGM CONNECTION STIFFENER TO DIAPHRAGM AFTER THE DECK SLAB CLOSURE POUR IS IN PLACE.

| QUANTITIES STRUCTURAL STEEL | |
|---|---|
| NB & SB "D1" DIAPHRAGMS | 13,143 LBS |

| NO. | DATE | BY | REMARKS |
|---|---|---|---|
| | | | |

REVISIONS

UTAH DEPARTMENT OF TRANSPORTATION
SALT LAKE CITY, UTAH
STRUCTURES DIVISION
PARSONS

DESIGN HM 12/04 CHECK MBD 01/05
DRAWN TA 12/04 CHECK MBD 01/05
QUANT. STB 12/04 CHECK MBD 01/05

APPROVAL RECOMM. DATE SENIOR DESIGN ENGR.
APPROVED FOR USE BY UDOT DATE UDOT BRIDGE ENGR.

I-15; CORRIDOR IN UTAH COUNTY
I-15 OVER UPRR AND SR-114 IN LINDON
DIAPHRAGM DETAILS 3
PROJECT NUMBER SP-15-6(52)241

UTAH
COUNTY

C-352W
DRG. NO.

SHT. 32 OF 53

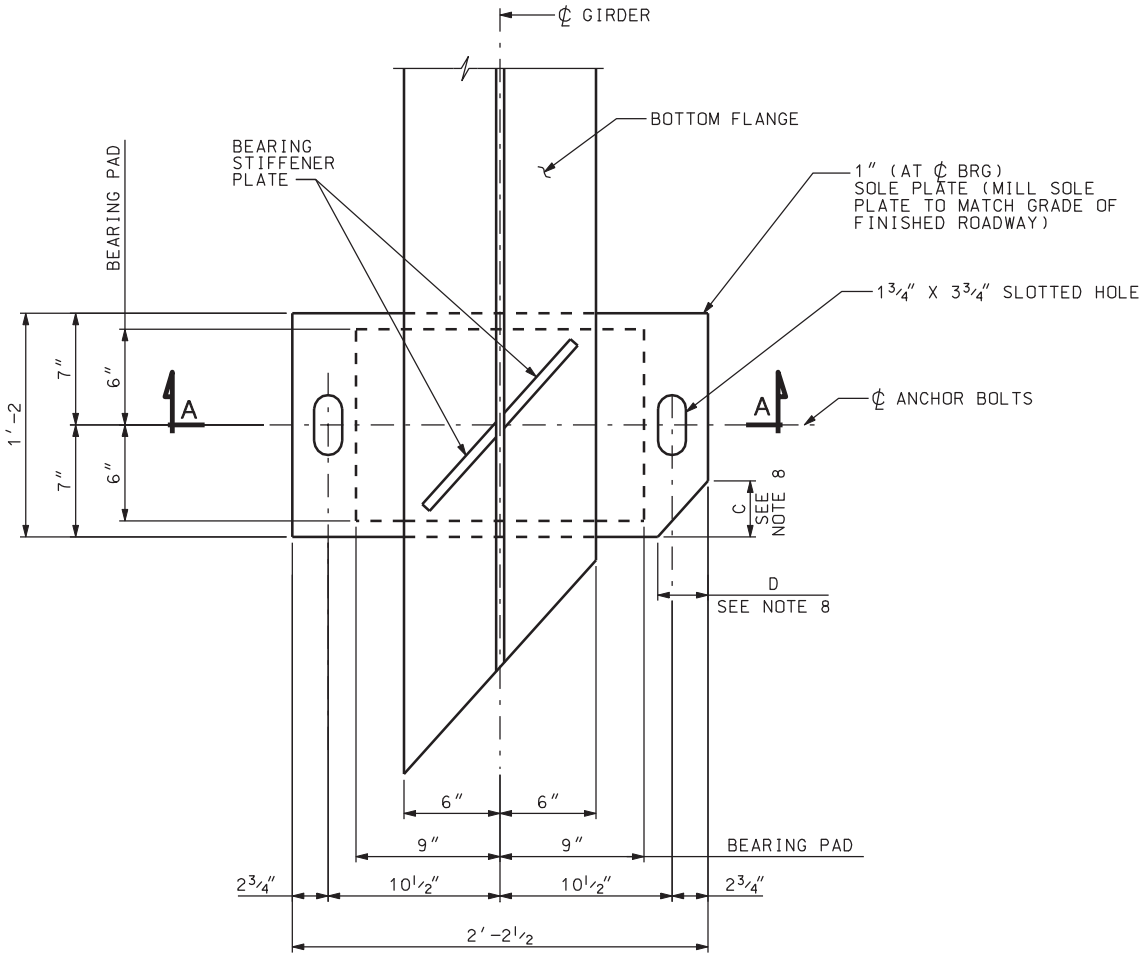


## PLAN AT ABUTMENT

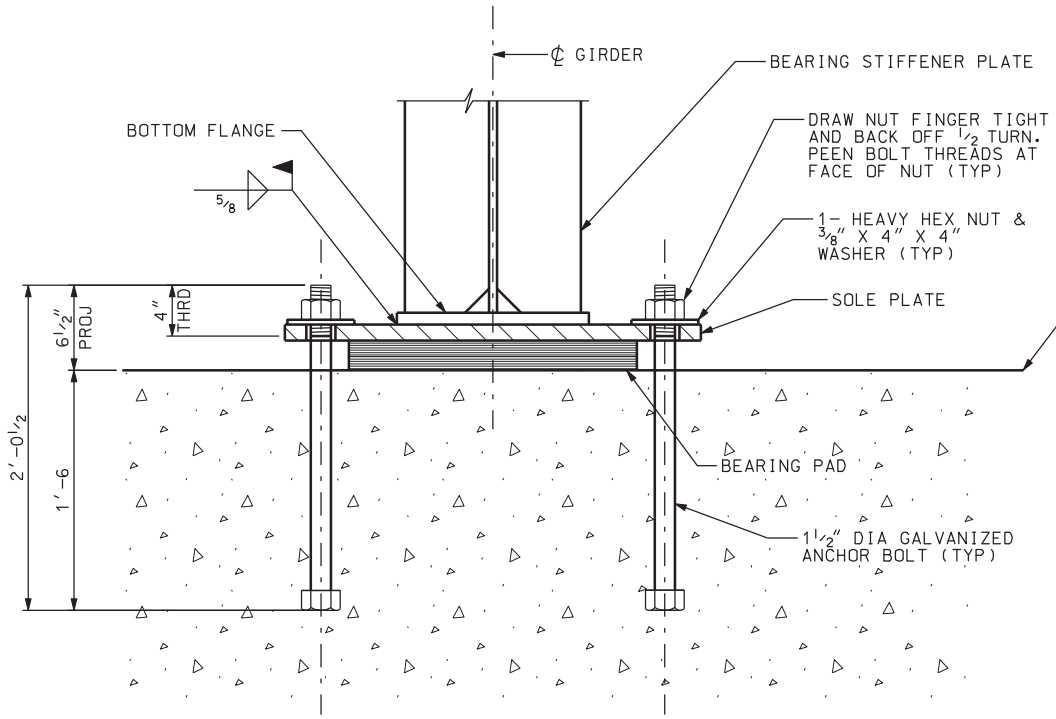


## SECTION A-A

1.

2.

3.

4.

5.

6.

7.

8.

DGN File:IP_PWPcdns1717\4433_C-352-33_BRNG01.dgn

02-MAY-2005

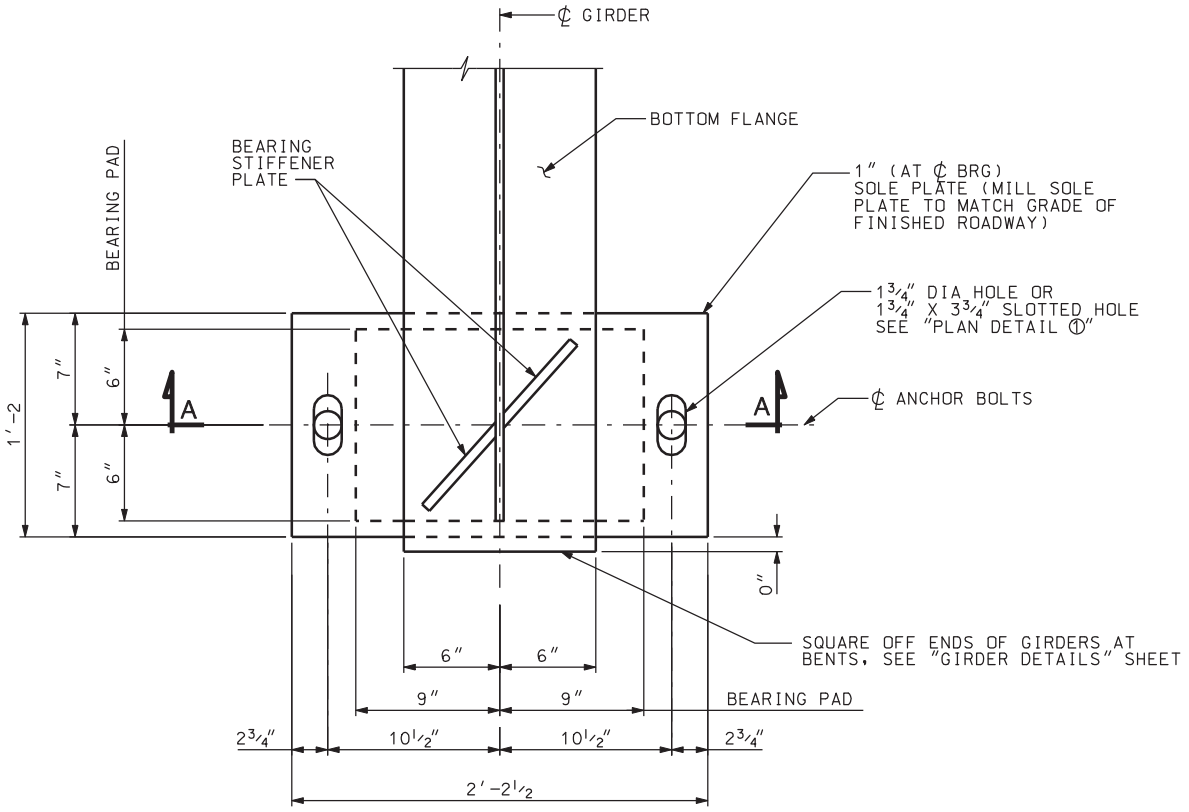


## PLAN AT BENT

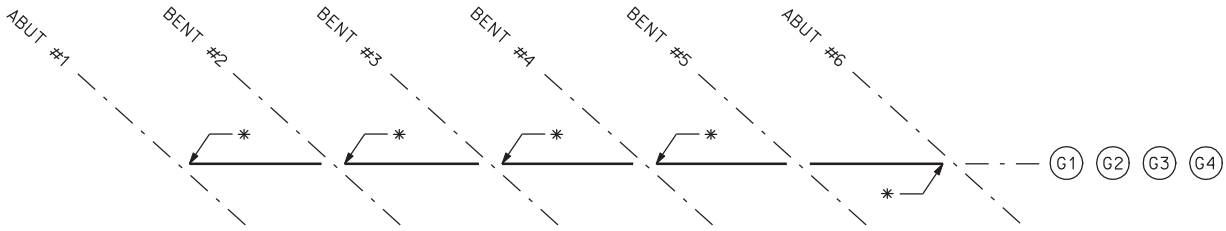


* INDICATES LOCATION OF SOLE PLATE SLOTTED HOLE

## PLAN DETAIL ①

## NOTES

PAYMENT FOR ANCHOR BOLT AND BEARING PAD IS INCLUDED IN THE CONTRACT PRICE FOR STRUCTURAL STEEL.

ELASTOMER FOR BEARING PADS HARDNESS 50.

USE ASTM F-1554 GRADE 36 ANCHOR BOLTS.

GALVANIZE NUTS, WASHERS, AND ANCHOR BOLTS IN ACCORDANCE WITH AASHTO M232 (ASTM A153). ALL GALVANIZED STEEL THREADS RE TO BE FREE FROM DEFECTS ALLOWING NUTS TO BE FREE RUNNING Y HAND FOR THE ENTIRE LENGTH OF THREADS.

FILL ANCHOR BOLT SOLE PLATE HOLES WITH SILICONE JOINT SEALER.

SOLE PLATES SHALL BE BEVELED TO MATCH GRADE OF FINISHED ROADWAY.

THE LOCATION OF THE ANCHOR BOLTS IN RELATION TO THE SLOTTED HOLES IN THE SOLE PLATE SHALL CORRESPOND WITH THE TEMPERATURE AT THE TIME OF ERECTION. THE ANCHOR BOLTS SHALL BE CENTERED IN THE SLOTTED HOLES AT 60°F

SEE "BEARING DETAILS 2" SHEET FOR "C", "D", AND ANCHOR BOLT LOCATION DIAGRAMS

| QUANTITIES STRUCTURAL STEEL | |
|---|---|
| SOLE PLATES ALL BENTS & ABUTS NB & SB | 4208 LBS |

| NO. | DATE | BY | REMARKS |
|---|---|---|---|
| | | | |

REVISIONS

UTAH DEPARTMENT OF TRANSPORTATION
SALT LAKE CITY, UTAH
STRUCTURES DIVISION
PARSONS

DESIGN HM 12/04 CHECK MBD 01/05
DRAWN TA 12/04 CHECK MBD 01/05
QUANT. STB 12/04 CHECK MBD 01/05

APPROVAL RECOMM. DATE SENIOR DESIGN ENGR.
APPROVED FOR USE BY UDOT DATE UDOT BRIDGE ENGR.

I-15; CORRIDOR IN UTAH COUNTY
I-15 OVER UPRR AND SR-114 IN LINDON
BEARING DETAILS 1

PROJECT NUMBER SP-15-6(52)241

UTAH
COUNTY

C-352W
DRG. NO.

SHT. 33 OF 53

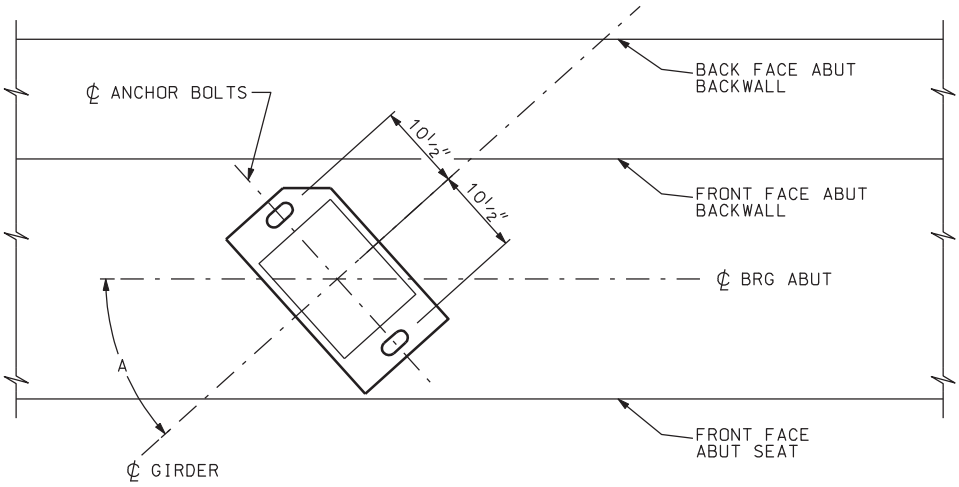


## ANCHOR BOLT LOCATION DIAGRAM (ABUTMENT)

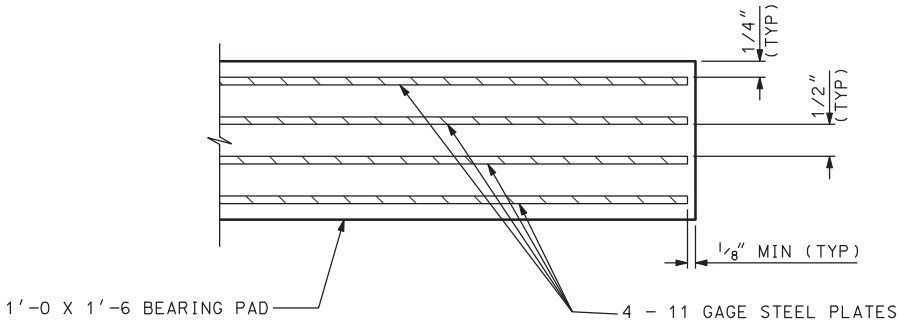


## BEARING PAD DETAIL

02-MAY-2005 DGN File:IP_PWPcdnsl717\4433_C-352-34_BRNG02.dgn

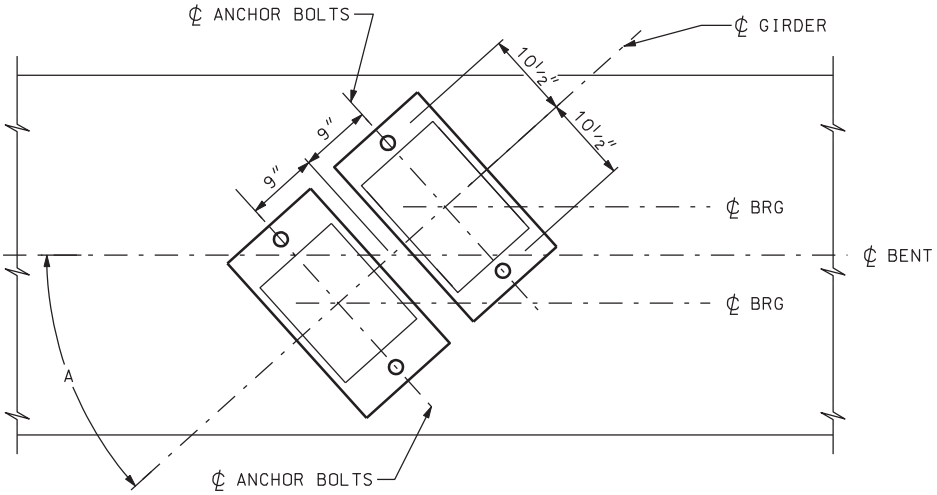


## ANCHOR BOLT LOCATION DIAGRAM (BENT)

| BEARING DETAILS | | | | |
|---|---|---|---|---|
| | "A" | NO. BRG | C | D |
| ABUT 1 | 42°02'23" | 2 | 4" | 4 3/8" |
| BENT 2 | 42°10'12" | 4 | N/A | N/A |
| BENT 3 | 42°00'08" | 4 | N/A | N/A |
| BENT 4 | 41°53'23" | 4 | N/A | N/A |
| BENT 5 | 41°53'45" | 4 | N/A | N/A |
| ABUT 6 | 42°01'58" | 2 | 4" | 4 3/8" |

## NOTES

1. SEE NOTES ON "BEARING DETAILS 1" SHEET

| NO. | DATE | BY | REMARKS |
|---|---|---|---|

REVISIONS

UTAH DEPARTMENT OF TRANSPORTATION
SALT LAKE CITY, UTAH
STRUCTURES DIVISION
PARSONS

DESIGN HM 12/04 CHECK MBD 01/05
DRAWN TA 12/04 CHECK MBD 01/05
QUANT. STB 12/04 CHECK MBD 01/05

APPROVAL RECOMM. DATE SENIOR DESIGN ENGR.
APPROVED FOR USE BY UDOT DATE UDOT BRIDGE ENGR.

I-15; CORRIDOR IN UTAH COUNTY
I-15 OVER UPRR AND SR-114 IN LINDON
BEARING DETAILS 2
PROJECT NUMBER SP-15-6(52)241

UTAH
COUNTY

C-352W
DRG. NO.

SHT. 34 OF 53

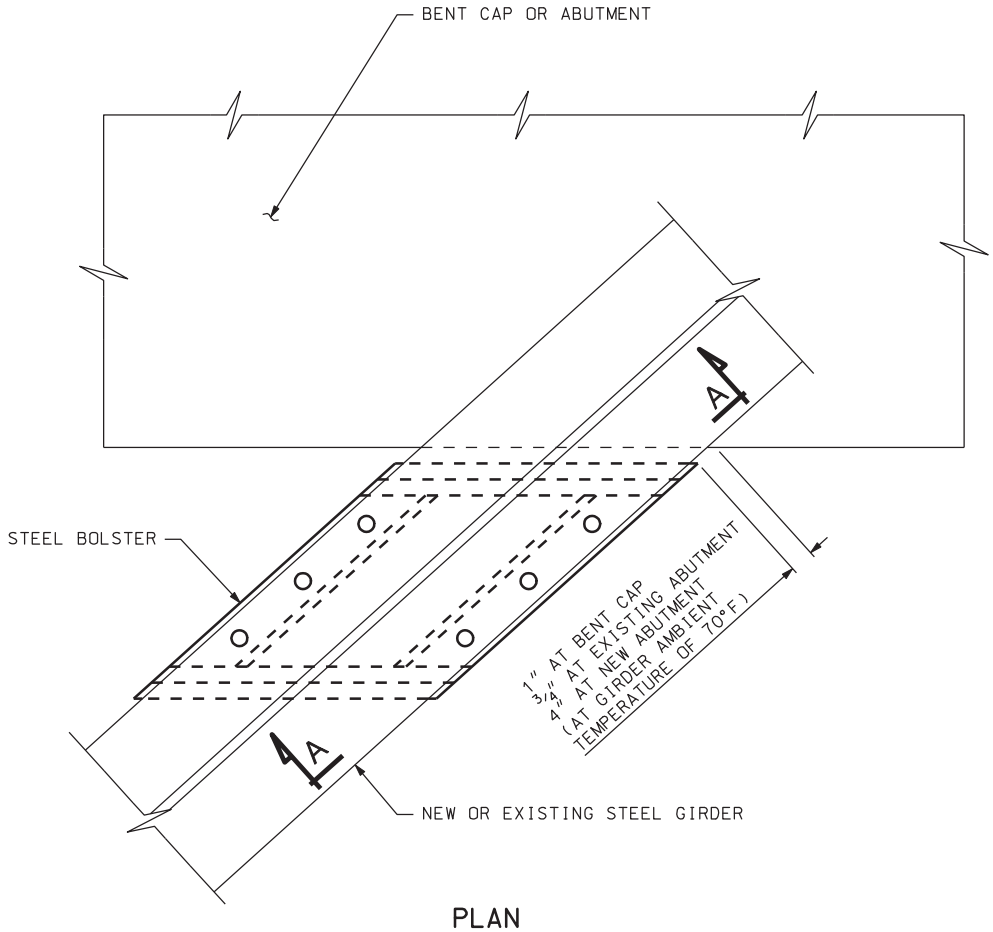


## PLAN

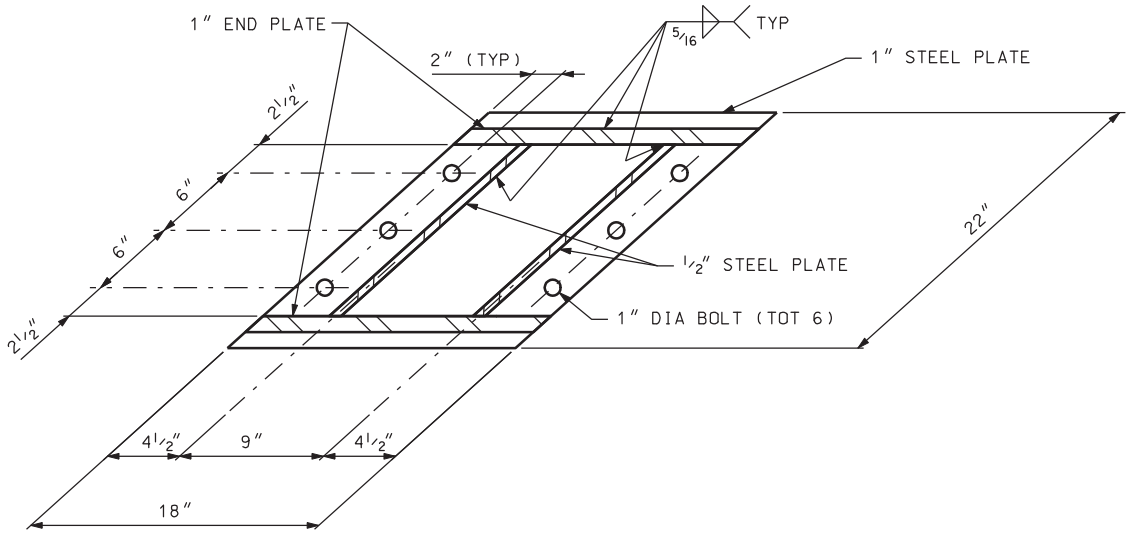


## STEEL BOLSTER DETAIL

DGN File:IP_PWPcdms1717\4433_C-352-35_BOLSTER.dgn
02-MAY-2005

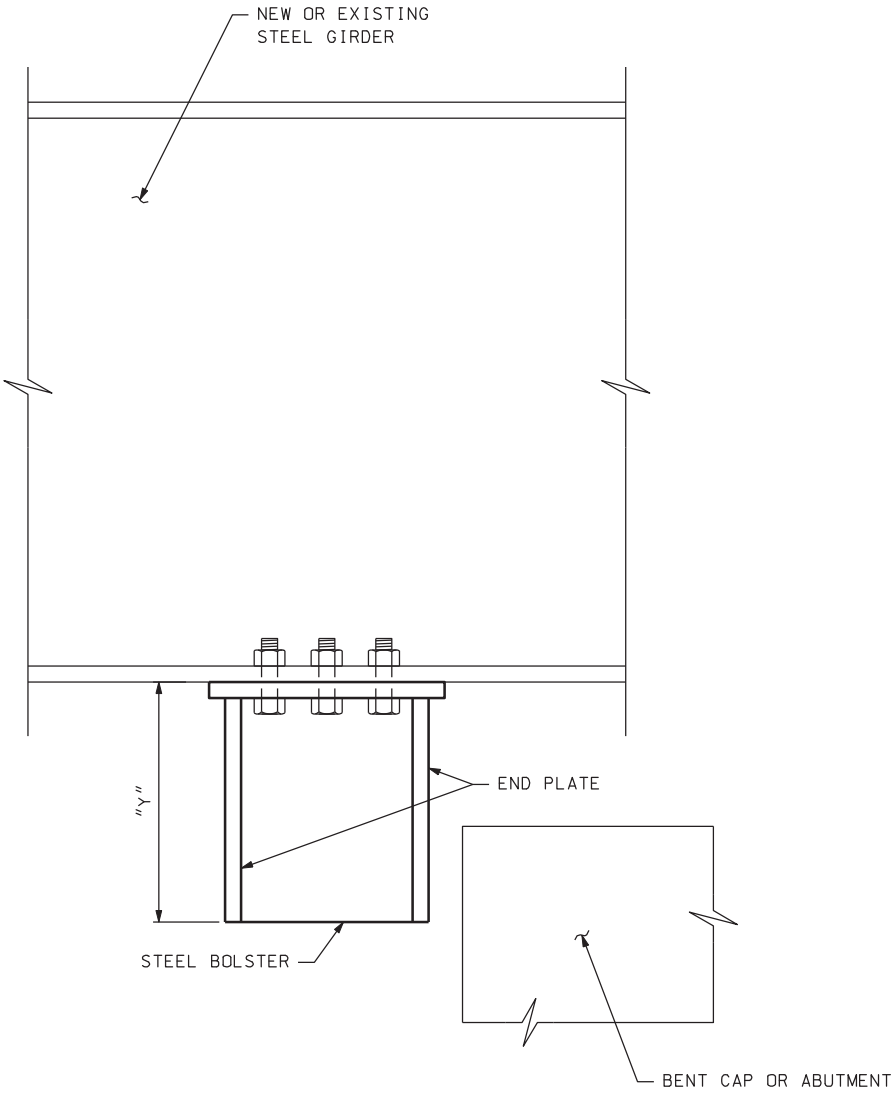


| LOCATION | "Y" |
|---|---|
| EXISTING BENT CAP | 15" |
| NEW BENT CAP | 12" |
| EXISTING ABUTMENT | 12" |
| NEW ABUTMENT | 12" |

## SECTION A-A

## NOTES

1. USE STRUCTURAL STEEL CONFORMING TO AASHTO M270 GRADE 50 FOR STEEL BOLSTERS.
2. USE 1" DIA HIGH STRENGTH BOLTS CONFORMING TO ASTM A325 (BEARING TYPE). EXCLUDE THREADS FROM SHEAR PLANE.

| QUANTITIES STRUCTURAL STEEL | |
|---|---|
| EXISTING BENT CAPS NB & SB | 27,412 LBS |
| NEW BENT CAPS NB & SB | 7,695 LBS |
| EXISTING ABUTMENTS NB & SB | 5,771 LBS |
| NEW ABUTMENTS NB & SB | 1,924 LBS |
| TOTAL | 42,802 LBS |

| NO. | DATE | BY | REMARKS |
|---|---|---|---|

REVISIONS

UTAH DEPARTMENT OF TRANSPORTATION
SALT LAKE CITY, UTAH
STRUCTURES DIVISION
PARSONS

DESIGN HM 12/04 CHECK MDB 01/05
DRAWN TA 12/04 CHECK MDB 01/05
QUANT. STB 12/04 CHECK MDB 01/05

APPROVAL RECOMM. DATE SENIOR DESIGN ENGR.
APPROVED FOR USE BY UDOT DATE UDOT BRIDGE ENGR.

I-15; CORRIDOR IN UTAH COUNTY
I-15 OVER UPRR AND SR-114 IN LINDON
STEEL BOLSTER DETAILS

PROJECT NUMBER SP-15-6(52)241

UTAH
COUNTY

C-352W
DRG. NO.

SHT. 35 OF 53

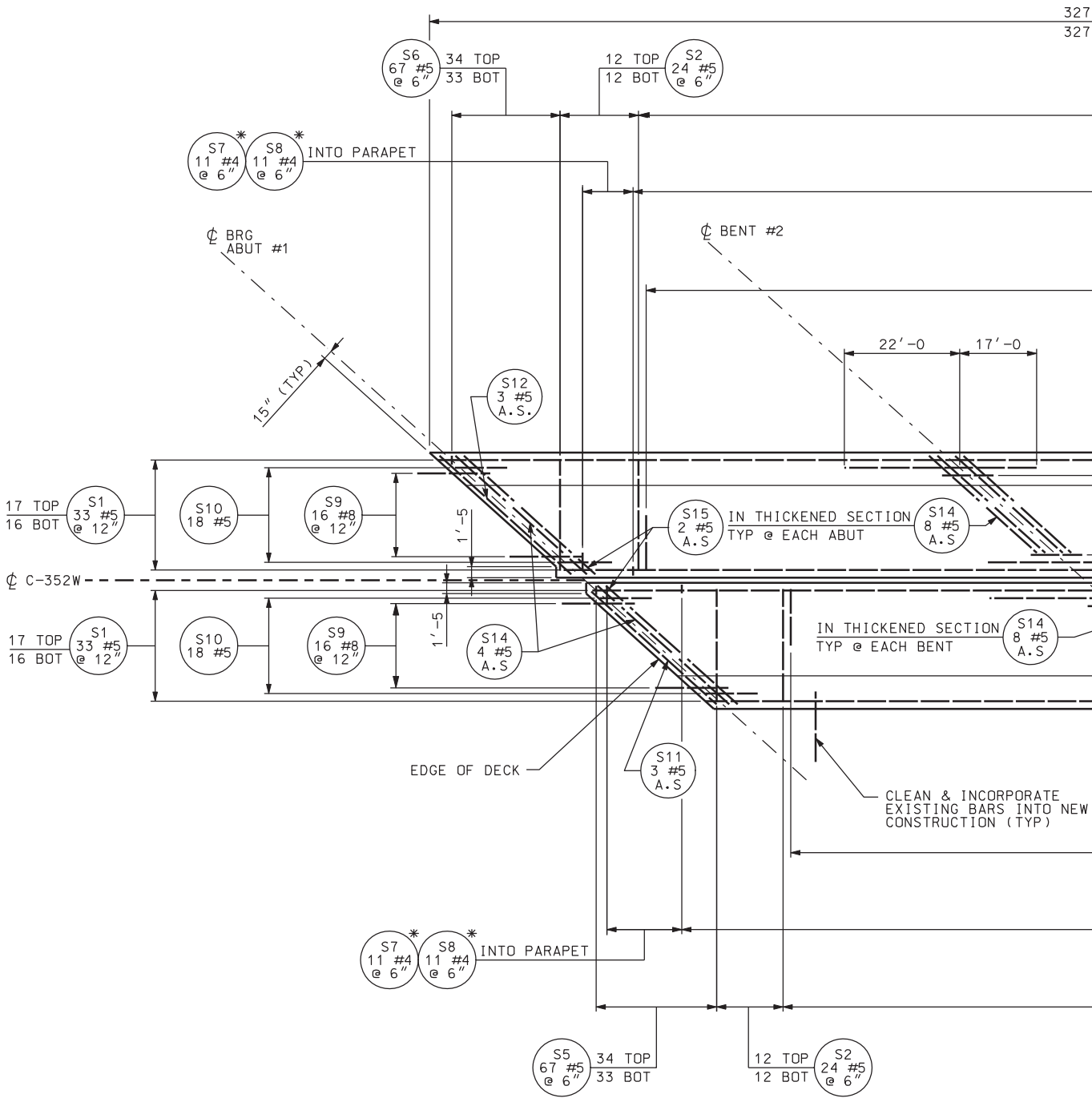


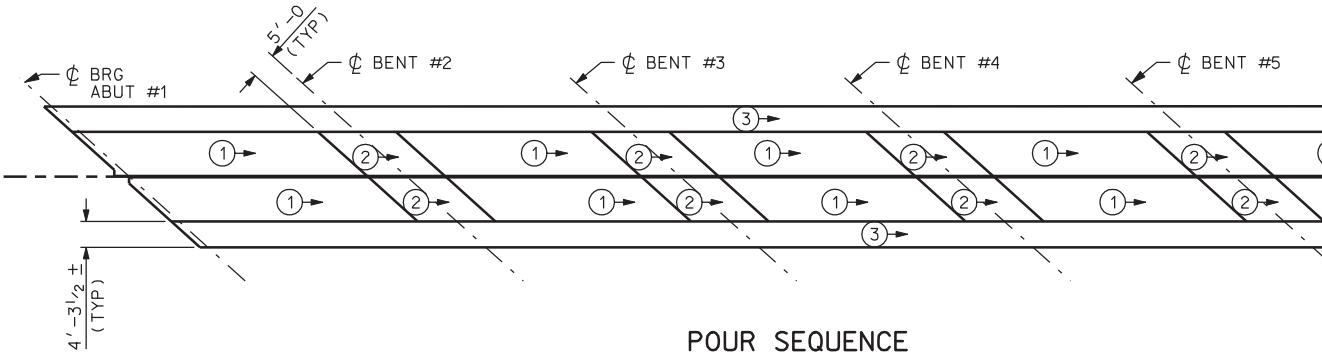


## POUR SEQUENCE

(4) SEQUENCE NUMBER

NOTE: PLACE DECK IN SECTIONS AN
INDICATED. CONTRACTOR MAY
ALTERNATE PROCEDURES INCL
COMBINING OF POURS (1) AND(
BY THE ENGINEER.

DGN File: IP_PWPcdns1717\4433_C-352-36_DCKSLB01.dgn

02-MAY-2005

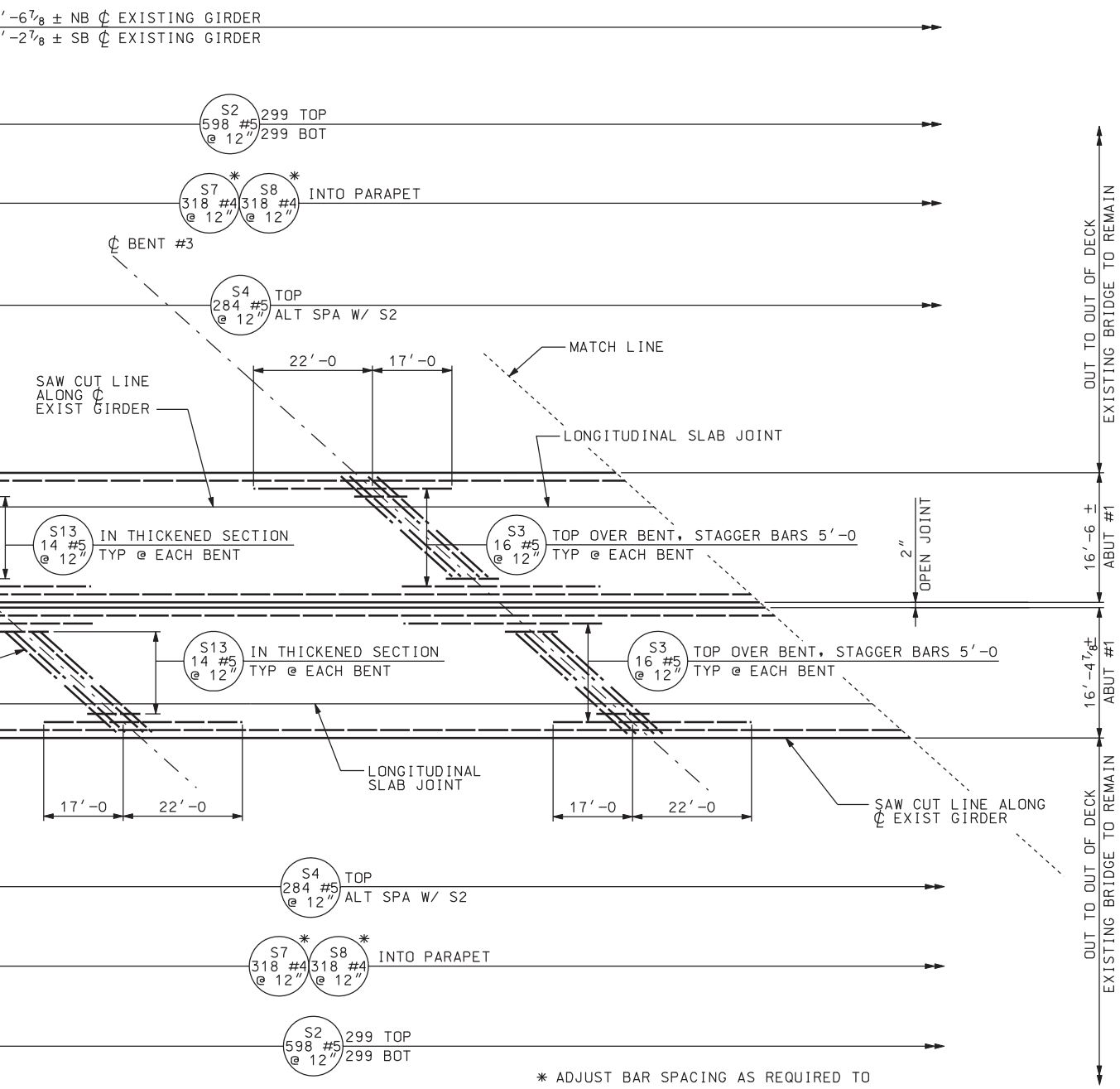


* ADJUST BAR SPACING AS REQUIRED TO NOT EXCEED MAXIMUM SPACING SHOWN.

## PLAN

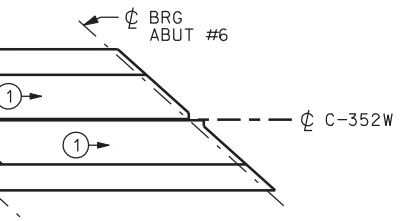


## NOTES

1. SEE "DECK SECTIONS" FOR ADDITIONAL REINFORCEMENT.
2. SEE "PARAPET DETAILS" FOR PARAPET REINFORCEMENT.
3. MINIMUM LAP LENGTH FOR (S1) LONGITUDINAL DECK REINFORCING: #5 BAR 2'-6.
4. STAGGER (S1), (S2), (S5), AND (S6) BARS SUCH THAT THE TOP BARS ARE OFFSET 6" FROM THE BOTTOM BARS.
5. SEE "APPROACH SLAB DETAILS" SHEET FOR CORNER REINFORCING DETAILS AT ABUT #1 AND ABUT #6.

ND SEQUENCE
/ SUBMIT
UDING THE
(2) FOR APPROVAL

| QUANTITIES STRUCTURAL CONCRETE | |
|---|---|
| NB & SB DECKS | 272.9 CY |

| NO. | DATE | BY | REMARKS |
|---|---|---|---|
| | | | |

REVISIONS

UTAH DEPARTMENT OF TRANSPORTATION
SALT LAKE CITY, UTAH
STRUCTURES DIVISION
PARSONS

DESIGN HM 12/04 CHECK MBD 01/05
DRAWN TA 12/04 CHECK MBD 01/05
QUANT. STB 12/04 CHECK MBD 01/05

APPROVAL RECOMM. DATE SENIOR DESIGN ENGR.
APPROVED FOR USE BY UDOT DATE UDOT BRIDGE ENGR.

I-15; CORRIDOR IN UTAH COUNTY
I-15 OVER UPRR AND SR-114 IN LINDON
DECK PLAN 1
PROJECT NUMBER SP-15-6(52)241

UTAH COUNTY
C-352W DRG. NO.
SHT. 36 OF 53

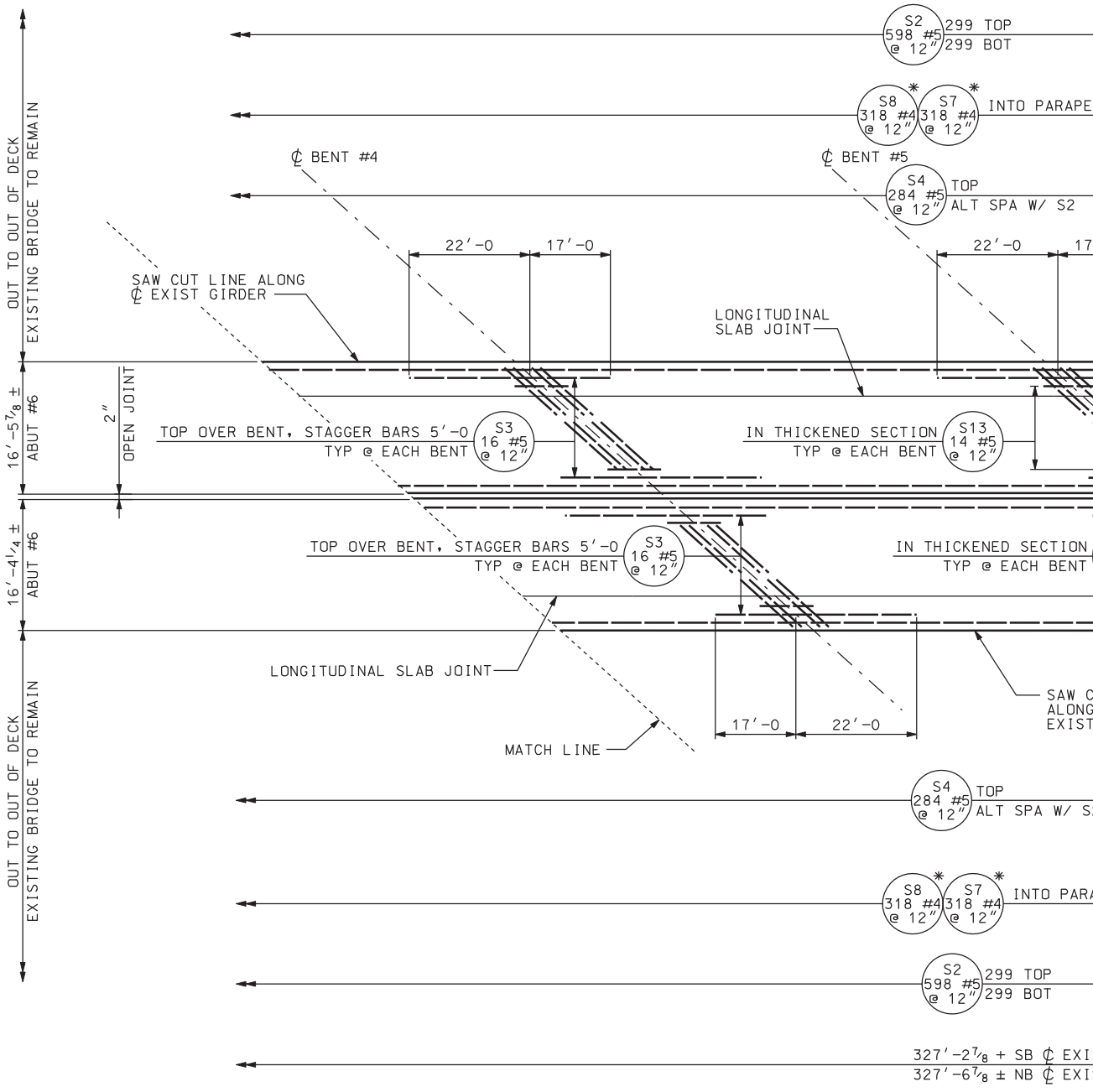


## PLAN

DGN File:IP_PWPcdnsl717\4433_C-352-37_DCKSLB02.dgn

02-MAY-2005

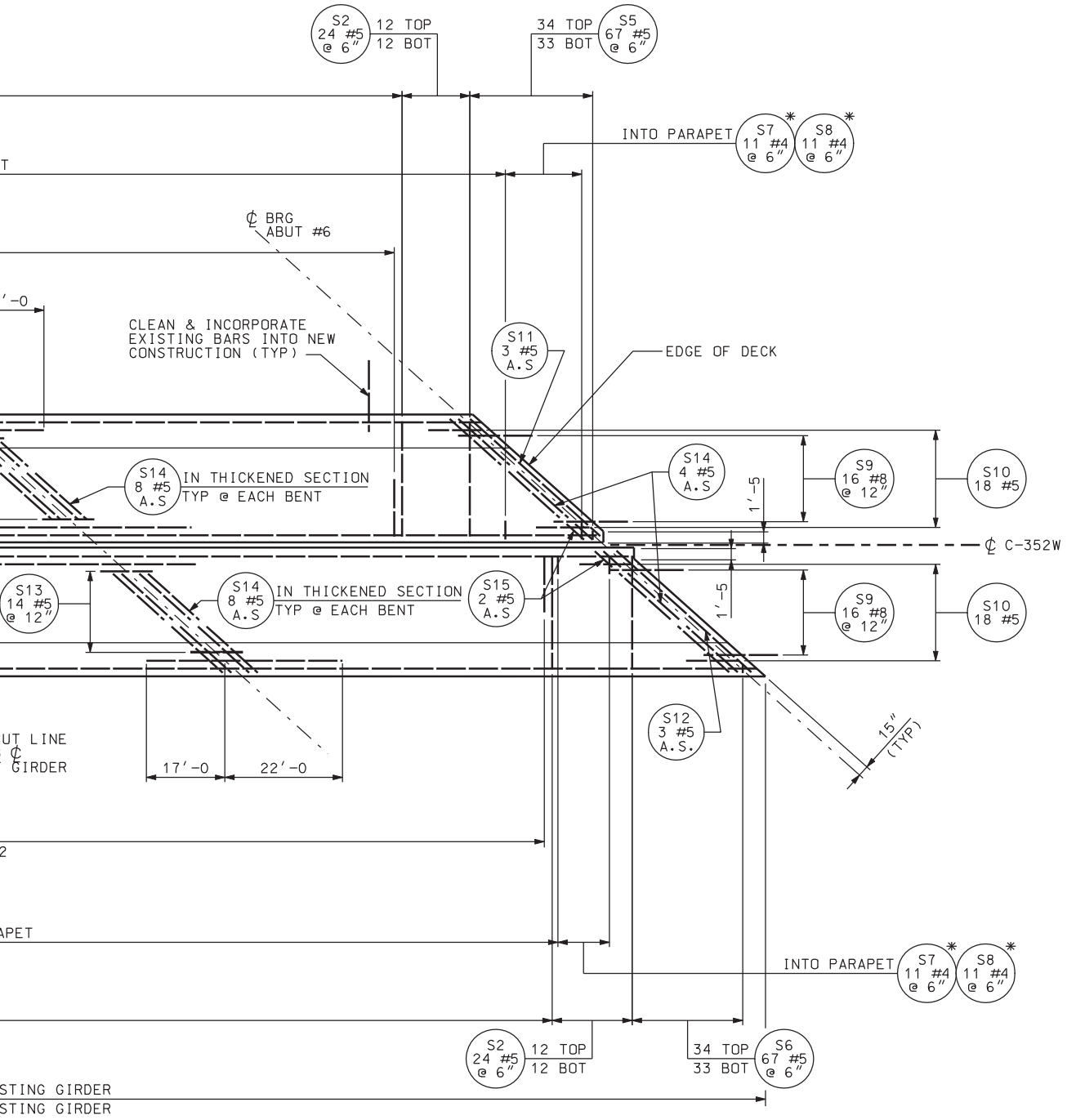


## NOTE

SEE "BRIDGE DECK PLAN 1" FOR INFORMATION NOT SHOWN, POUR SEQUENCE, AND NOTES

| NO. | DATE | BY | REMARKS |
|---|---|---|---|

REVISIONS

UTAH DEPARTMENT OF TRANSPORTATION
SALT LAKE CITY, UTAH
STRUCTURES DIVISION
PARSONS

DESIGN HM 12/04 CHECK MBD 01/05
DRAWN TA 12/04 CHECK MBD 01/05
QUANT. STB 12/04 CHECK MBD 01/05

APPROVAL RECOMM. DATE SENIOR DESIGN ENGR.
APPROVED FOR USE BY UDOT DATE UDOT BRIDGE ENGR.

I-15; CORRIDOR IN UTAH COUNTY
I-15 OVER UPRR AND SR-114 IN LINDON
DECK PLAN 2

PROJECT NUMBER SP-15-6(52)241

UTAH
COUNTY

C-352W
DRG. NO.

SHT. 37 OF 53

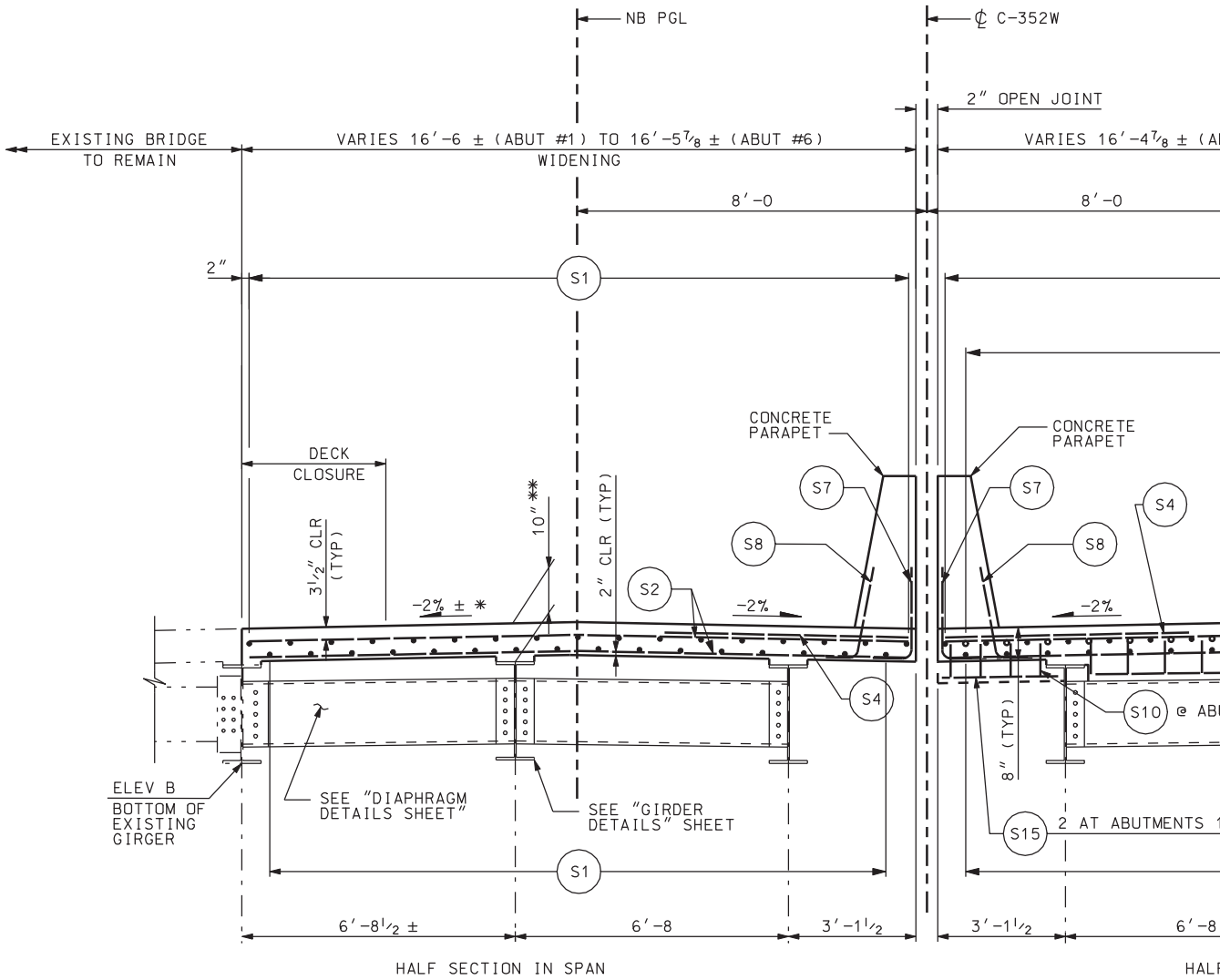


## TYPICAL CROSS SECTION

* MATCH EXISTING CROSS SLOPE
** AT ℄ BENT AT BENT AND AT ℄ BRG AT ABUT

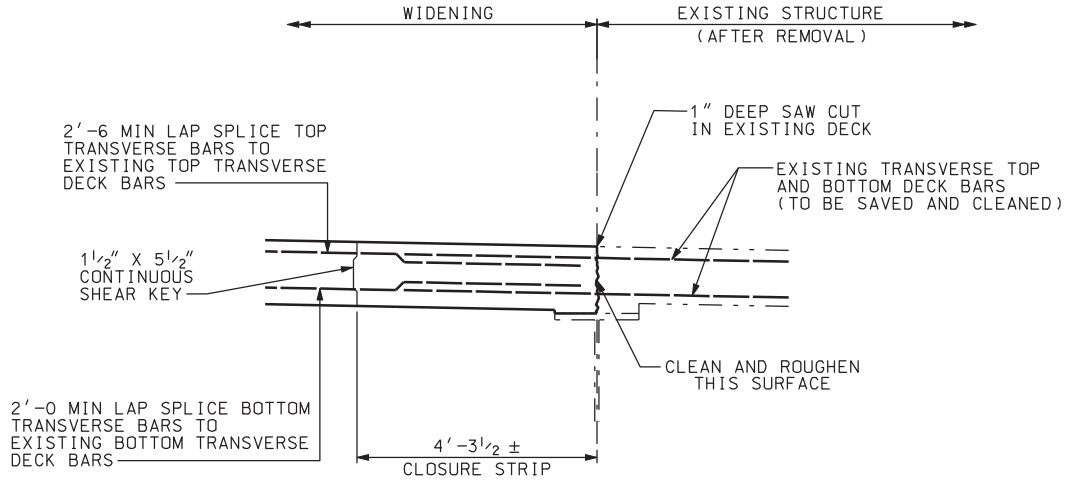


## DECK CLOSURE

DGN File: IP_PWPcdns1717\4433_C-352-38_DECK01.dgn
02-MAY-2005

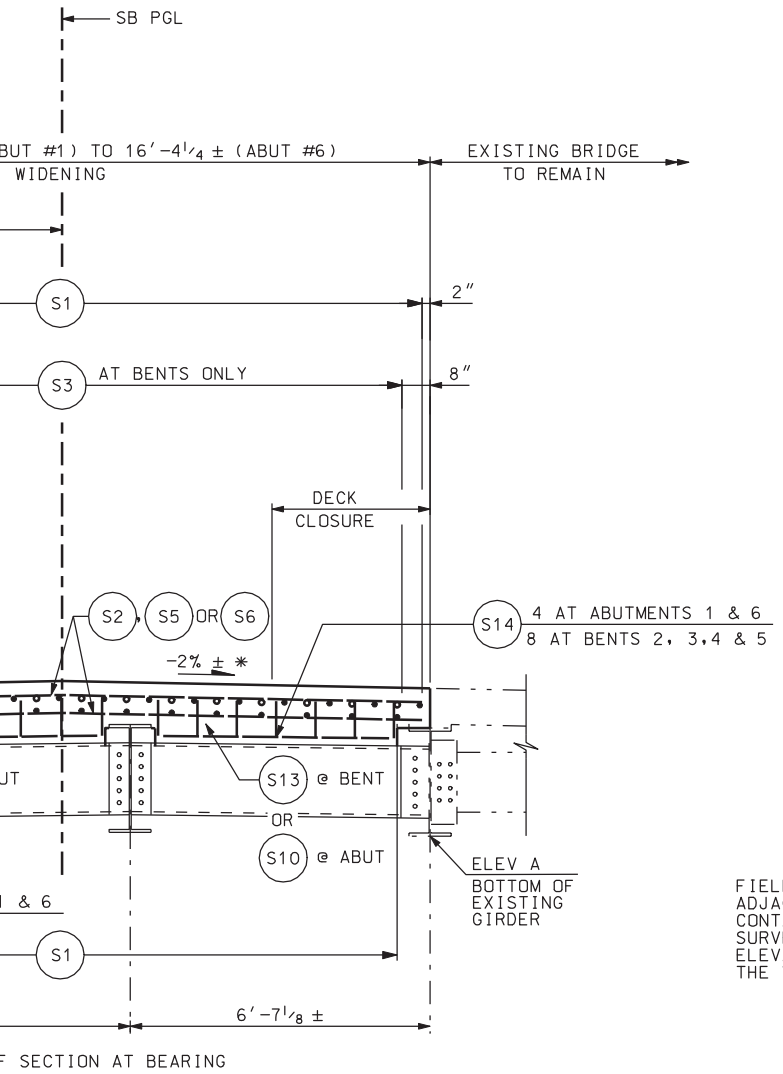


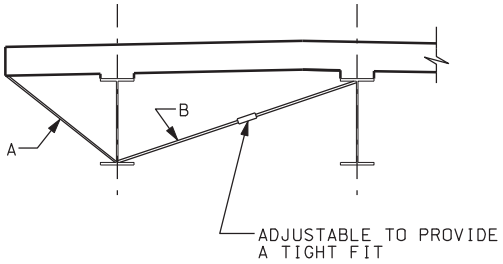


BRACE DECK OVERHANGS DURING PLACEMENT OF DECK AS SHOWN. ENSURE THAT MEMBER "B" IS CAPABLE OF DEVELOPING THE FORCES INDUCED BY MEMBER "A". SHOP DRAWINGS ARE REQUIRED.

## SECTION AT DECK OVERHANG

| TABULATED ELEVATIONS | | |
|---|---|---|
| | ELEV A | ELEV B |
| BENT #3W | 4521.43 | 4521.09 |
| BENT #3E | 4521.50 | 4521.17 |

FIELD VERIFY THE EXISTING BOTTOM OF GIRDER ELEVATIONS ADJACENT TO THE WIDENED PORTIONS OF THE STRUCTURE. CONTACT THE ENGINEER IF THE DISCREPANCY BETWEEN THE SURVEYED AND DETAILED ELEVATIONS EXCEEDS 1". THE ELEVATIONS SHOWN ARE BASED ON SURVEYED ELEVATIONS AT THE WEST (W) OR EAST (E) FACE OF THE BENT CAP.

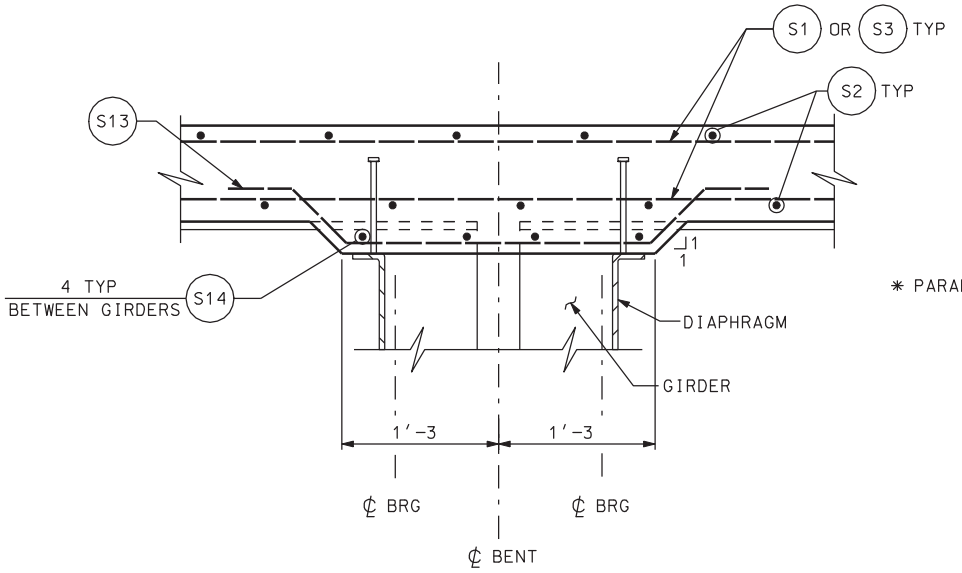


* PARALLEL TO GIRDER

## THICKENED SECTION

BENT 2, 3, 4 & 5

## NOTE

SEE "ABUTMENT DETAILS 2" SHEET FOR THICKENED DECK AT ABUTMENTS.

| NO. | DATE | BY | REMARKS |
|---|---|---|---|

REVISIONS

UTAH DEPARTMENT OF TRANSPORTATION
SALT LAKE CITY, UTAH
STRUCTURES DIVISION
PARSONS

DESIGN HM 12/04 CHECK MBD 01/05
DRAWN TA 12/04 CHECK MBD 01/05
QUANT. STB 12/04 CHECK MBD 01/05

APPROVAL RECOMM. DATE SENIOR DESIGN ENGR.
APPROVED FOR USE BY UDOT DATE UDOT BRIDGE ENGR.

I-15; CORRIDOR IN UTAH COUNTY
I-15 OVER UPRR AND SR-114 IN LINDON
DECK SECTIONS

PROJECT NUMBER SP-15-6(52)241

UTAH
COUNTY

C-352W
DRG. NO.

SHT. 38 OF 53

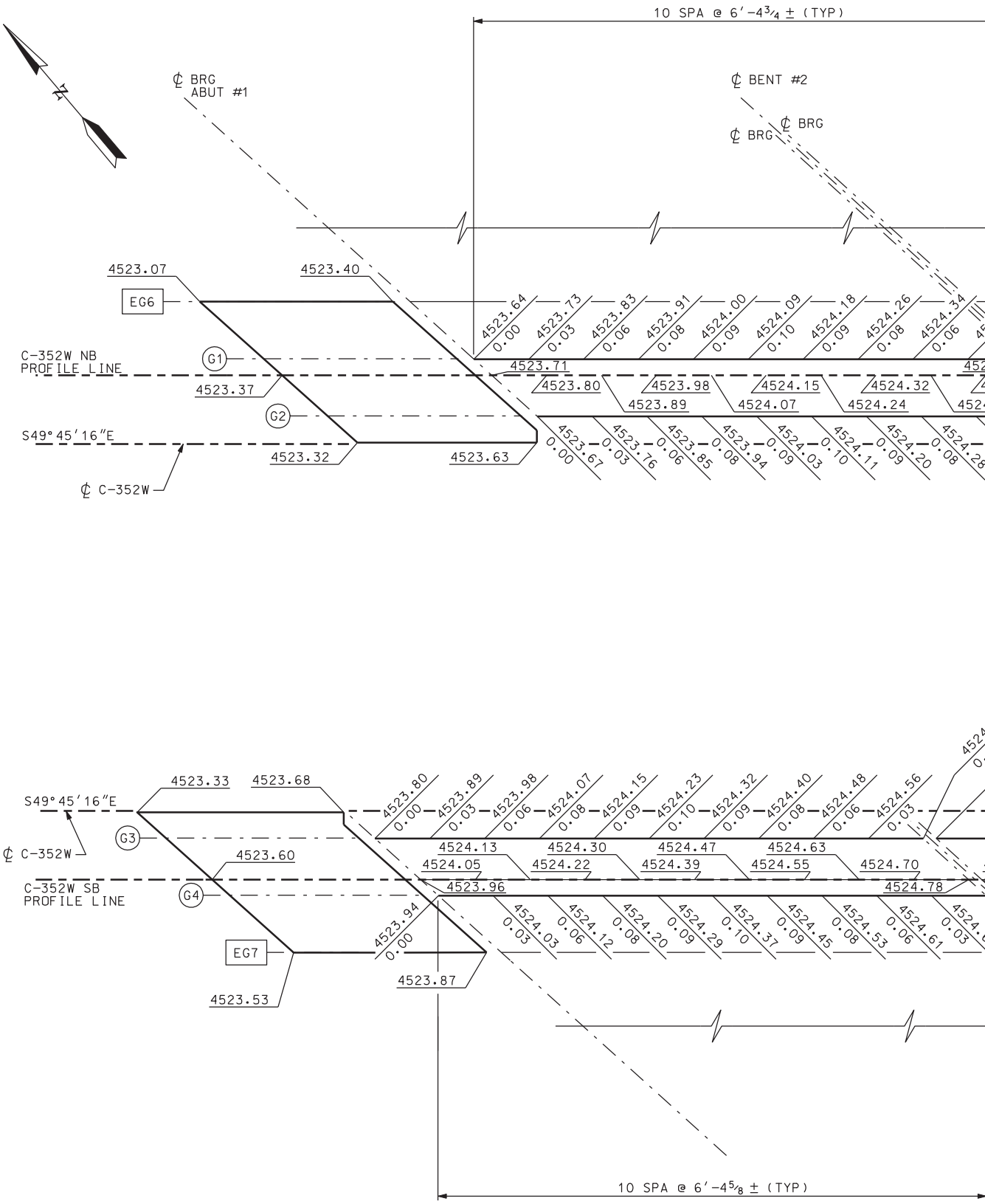


## NOTES

1. FIGURES ABOVE THE LINES ARE FINISHED GRADE ELEVATIONS AT THE TOP OF CONCRETE BEFORE THE OVERLAY IS APPLIED. FIGURES BELOW THE LINES ARE DEADLOAD DEFLECTIONS (FT). ADD THE DEFLECTIONS TO THE FINISHED GRADE ELEVATIONS TO OBTAIN SCREED ELEVATIONS.
2. DIMENSIONS AT GIRDER ARE ALONG ℄ GIRDER.
3. VERIFY THE FINISHED GRADE ELEVATIONS TO MATCH THE CROSS-SLOPE OF THE EXISTING STRUCTURE.
4. ℄ C-352W IS SHOWN SEPARATED FOR THE NORTHBOUND AND SOUTHBOUND STRUCTURES TO FACILITATE PRESENTATION OF DATA.
5. COORDINATE APPROACH SLAB ELEVATIONS WITH ROADWAY GRADING.

DGN File: IP_PWPcdms1717\4433_C-352-39_SCREED01.dgn
02-MAY-2005

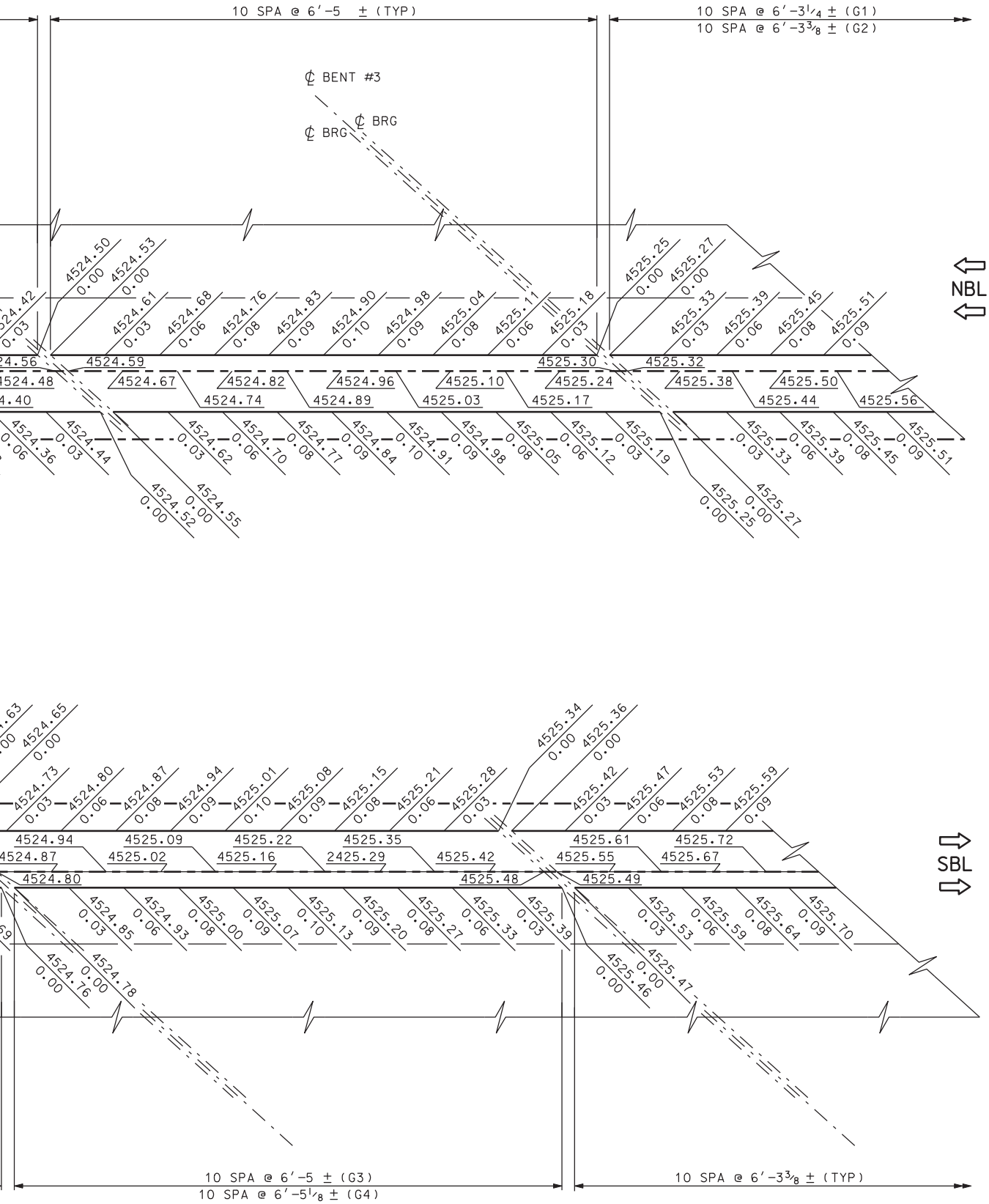


## SCREED ELEVATIONS

| NO. | DATE | BY | REMARKS |
|---|---|---|---|
| | | | |

REVISIONS

UTAH DEPARTMENT OF TRANSPORTATION
SALT LAKE CITY, UTAH
STRUCTURES DIVISION

PARSONS

DESIGN HM 12/04 CHECK MBD 01/05
DRAWN TA 12/04 CHECK MBD 01/05
QUANT. STB 12/04 CHECK MBD 01/05

APPROVAL RECOMM. DATE SENIOR DESIGN ENGR.
APPROVED FOR USE BY UDOT DATE UDOT BRIDGE ENGR.

I-15; CORRIDOR IN UTAH COUNTY
I-15 OVER UPRR AND SR-114 IN LINDON
SCREED ELEVATIONS 1

PROJECT NUMBER SP-15-6(52)241

UTAH
COUNTY

C-352W
DRG. NO.

SHT. 39 OF 53

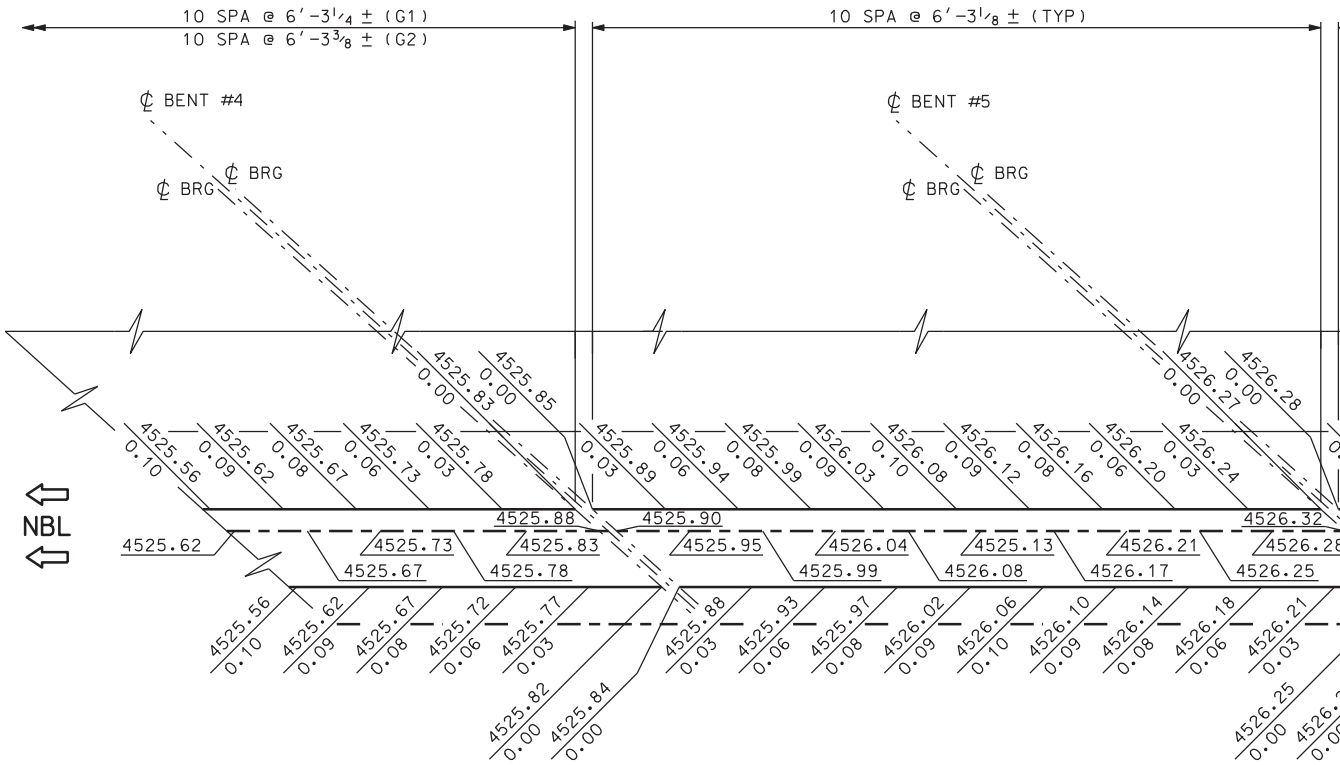


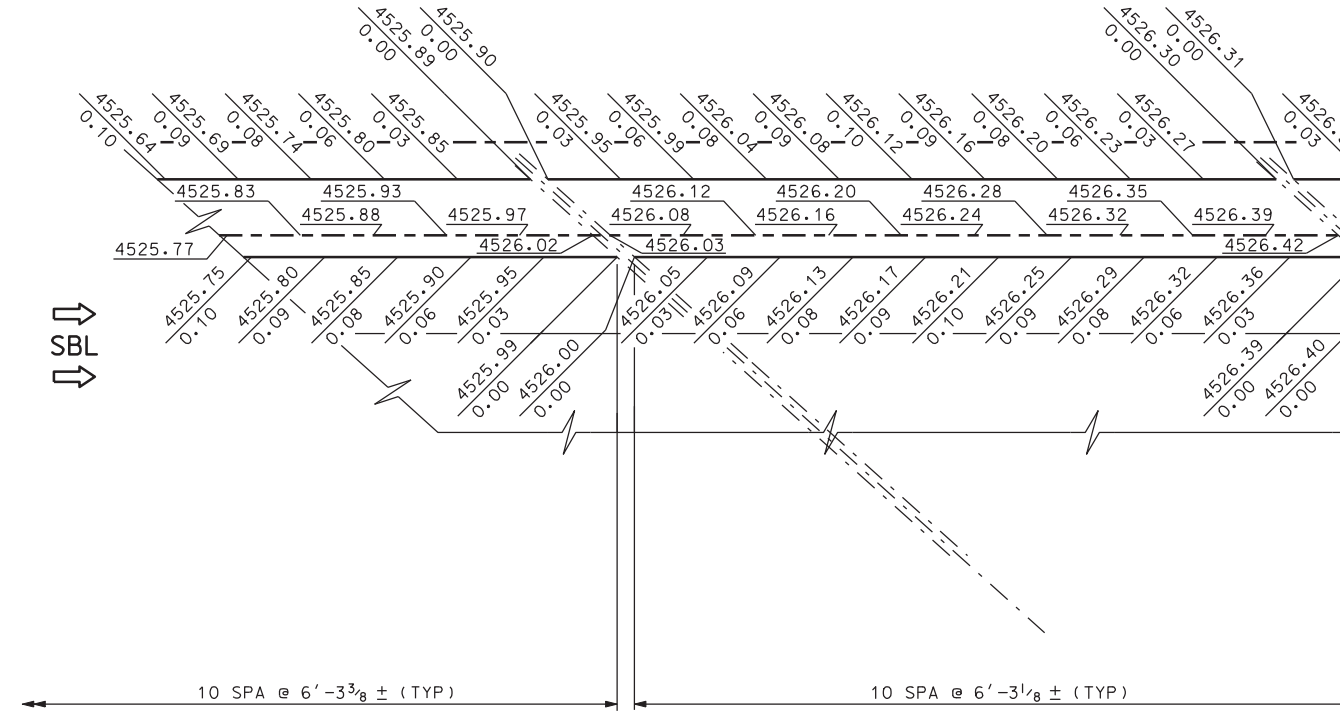


SCREED EL

DGN File:IP_PWPcdns1717\4433_C-352-40_SCREED02.dgn

02-MAY-2005

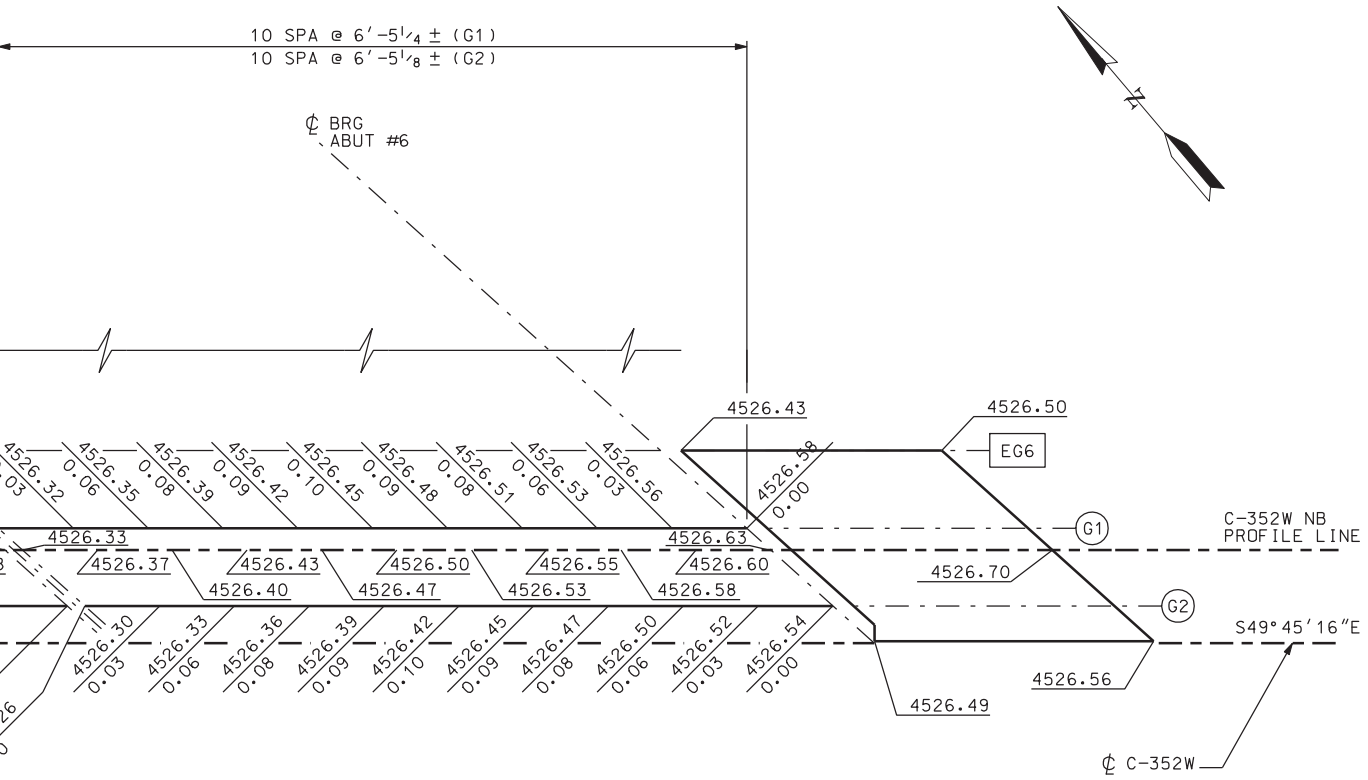


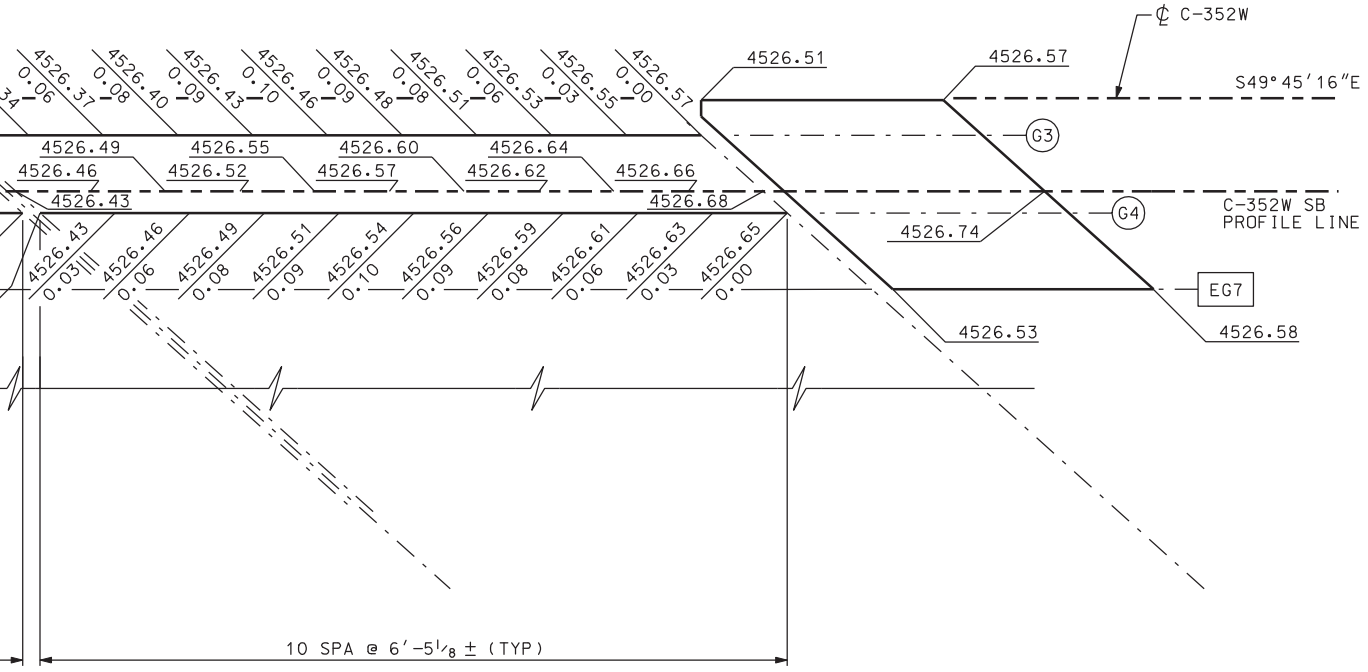


LEVATIONS

## NOTE

SEE NOTES ON "SCREED ELEVATIONS 1" SHEET

| NO. | DATE | BY | REMARKS |
|---|---|---|---|
| | | | |

REVISIONS

UTAH DEPARTMENT OF TRANSPORTATION
SALT LAKE CITY, UTAH
STRUCTURES DIVISION
PARSONS

DESIGN STB 12/04 CHECK MBD 01/05
DRAWN TA 12/04 CHECK MBD 01/05
QUANT. STB 12/04 CHECK MBD 01/05

APPROVAL RECOMM. DATE SENIOR DESIGN ENGR.
APPROVED FOR USE BY UDOT DATE UDOT BRIDGE ENGR.

I-15; CORRIDOR IN UTAH COUNTY
I-15 OVER UPRR AND SR-114 IN LINDON
SCREED ELEVATIONS 2

PROJECT NUMBER SP-15-6(52)241

UTAH
COUNTY

C-352W
DRG. NO.

SHT. 40 OF 53

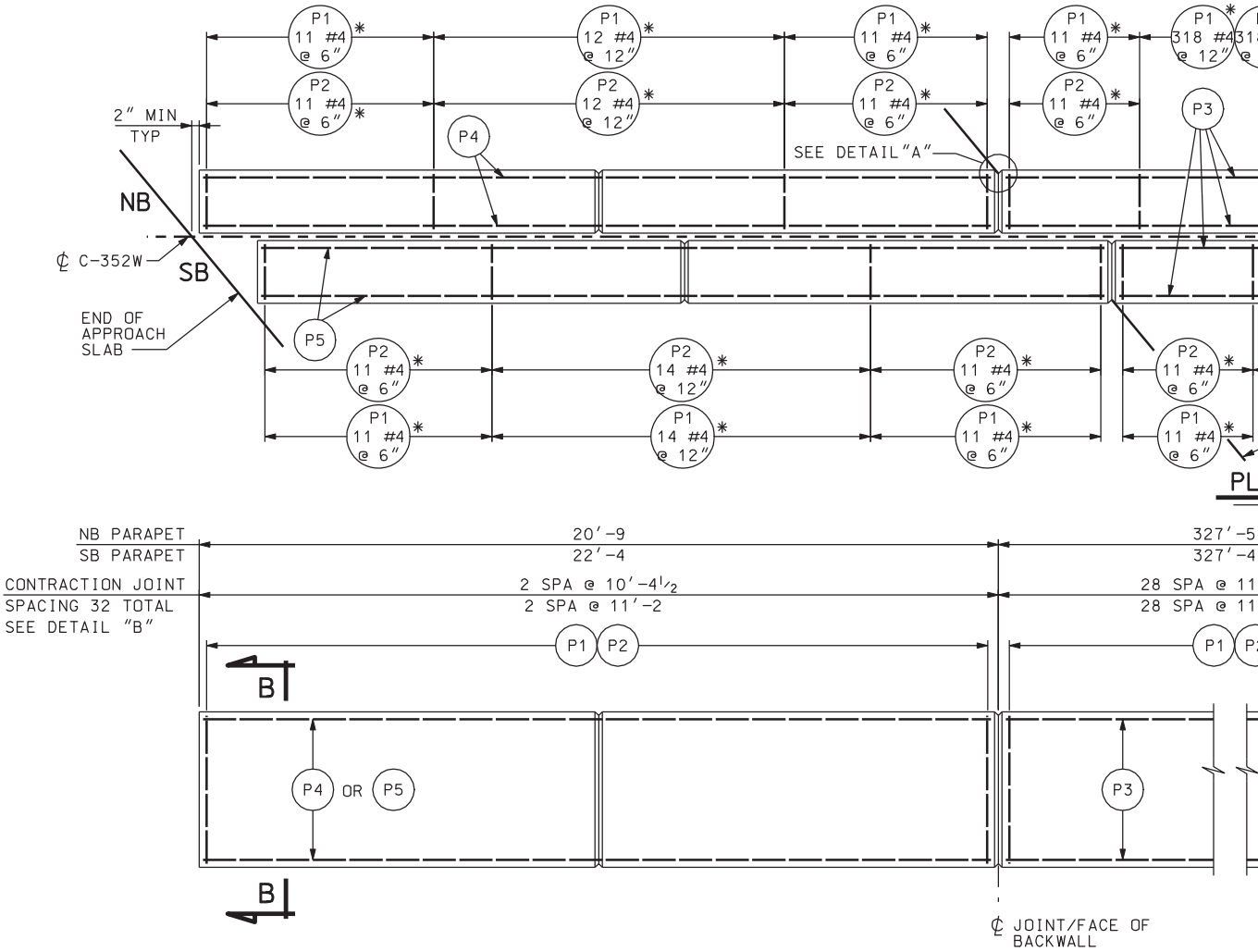


## ELEV

ALL DIMENSIONS SHOWN

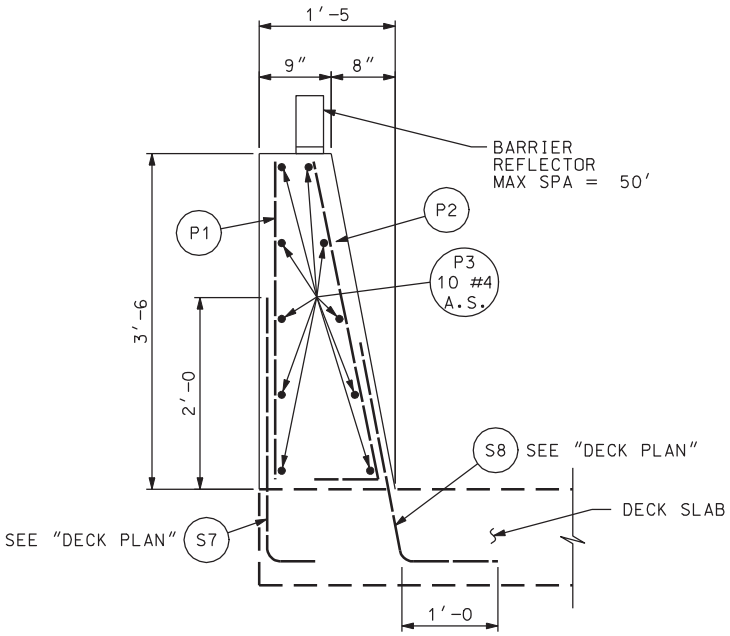


## SECTION A-A

NB PARAPET SHOWN, SB SIMILAR

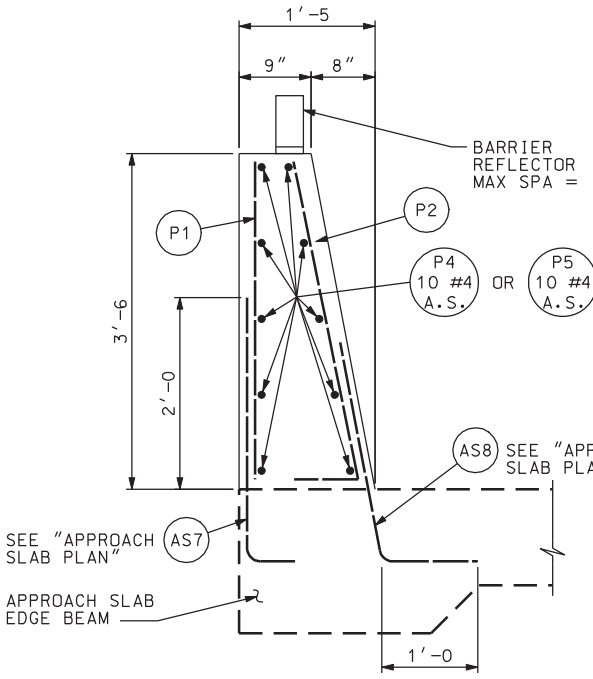


## SECTION B-B

NB PARAPET SHOWN, SB SIMILAR

DGN File:IP_PWPcdns1717\4433_C-352-41_PARA01.dgn

02-MAY-2005

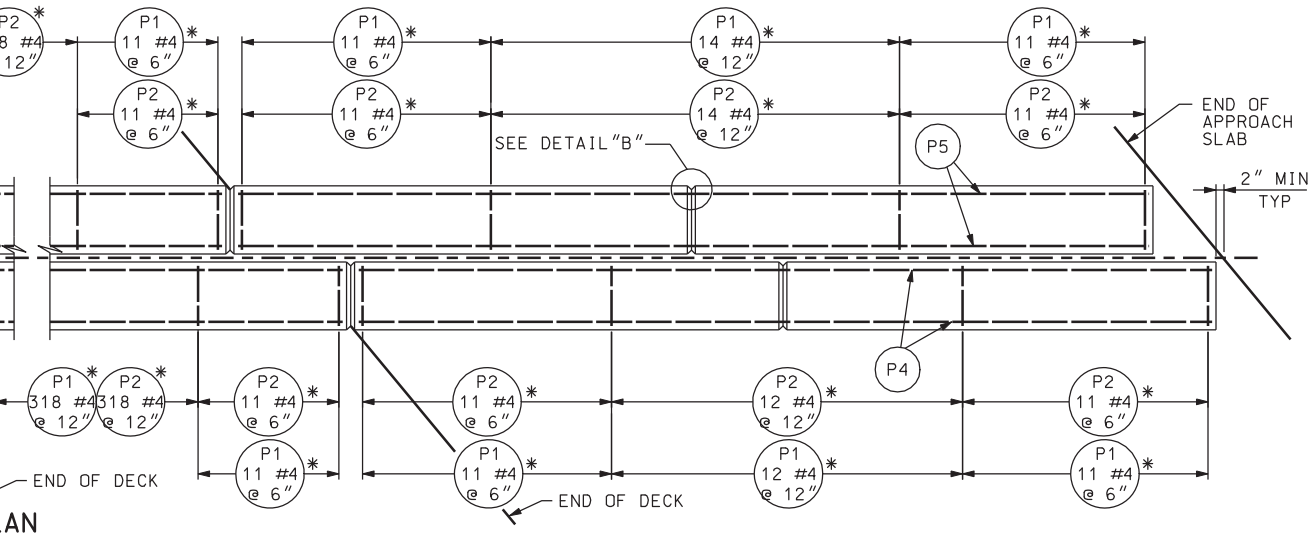


## AN

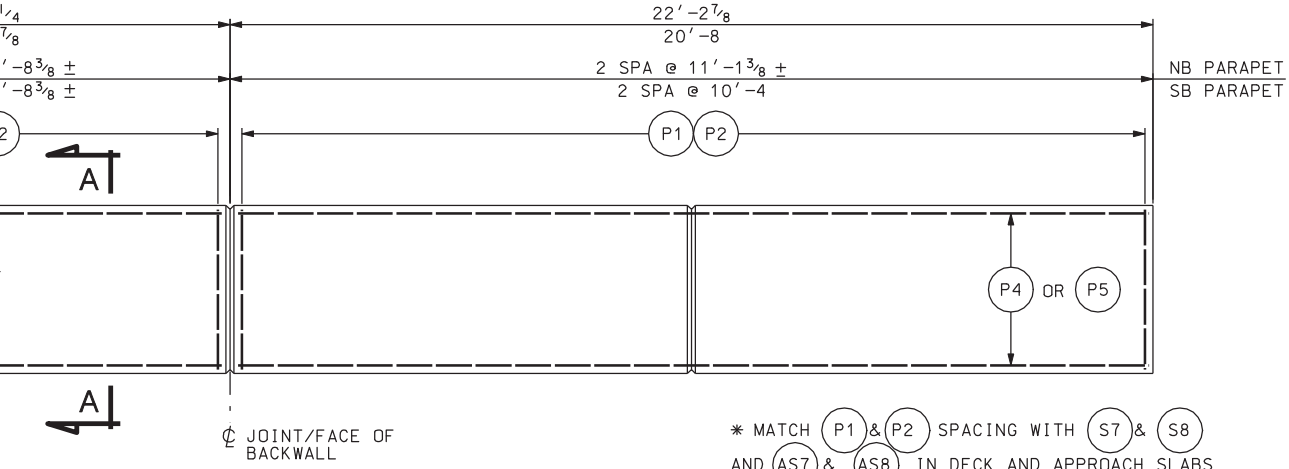


* MATCH (P1) & (P2) SPACING WITH (S7) & (S8) AND (AS7) & (AS8) IN DECK AND APPROACH SLABS RESPECTIVELY.

## ATION

ARE ALONG EDGE OF DECK

50'

PROACH AN"

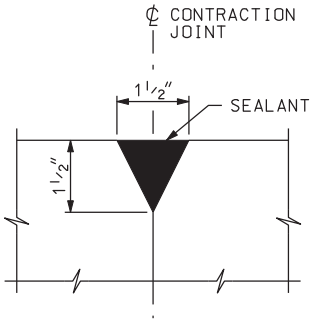


## DETAIL "B"

CONTRACTION JOINT

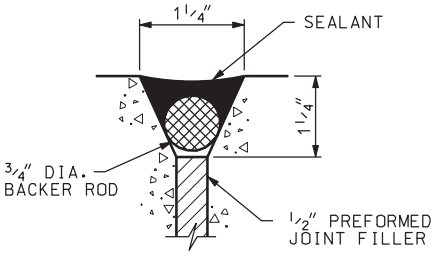


## DETAIL "A"

AT END OF BRIDGE DECK

## NOTES

1. MINIMUM SPLICE LENGTH FOR PARAPET #4 BARS IS 2'-2. ALTERNATE ALL REINFORCING STEEL SPLICES.
2. PROVIDE 2" MIN. COVER TO REINFORCING STEEL UNLESS NOTED OTHERWISE.
3. PLACE CONTRACTION JOINT ON SIDES AND TOP OF PARAPET.
4. EXTEND SEALANT AND FOAM BACKER ROD FROM DECK TO TOP OF PARAPET ON THE INSIDE PARAPET FACE AND ACROSS TOP OF PARAPET.
5. FOR END DETAILS OF PARAPET, SEE "PARAPET END DETAILS" SHEET.

| QUANTITIES STRUCTURAL CONCRETE | |
|---|---|
| NB & SB PARAPETS | 104.0 CY |

| NO. | DATE | BY | REMARKS |
|---|---|---|---|
| | | | |

REVISIONS

UTAH DEPARTMENT OF TRANSPORTATION
SALT LAKE CITY, UTAH
STRUCTURES DIVISION

PARSONS

DESIGN STB 12/04 CHECK MBD 01/05
DRAWN TA 12/04 CHECK MBD 01/05
QUANT. STB 12/04 CHECK MBD 01/05

APPROVAL RECOMM. DATE SENIOR DESIGN ENGR.
APPROVED FOR USE BY UDOT DATE UDOT BRIDGE ENGR.

I-15; CORRIDOR IN UTAH COUNTY
I-15 OVER UPRR AND SR-114 IN LINDON
PARAPET DETAILS

PROJECT NUMBER SP-15-6(52)241

UTAH COUNTY

C-352W DRG. NO.

SHT. 41 OF 53

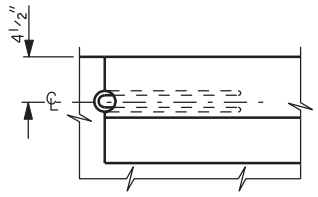


PLAN

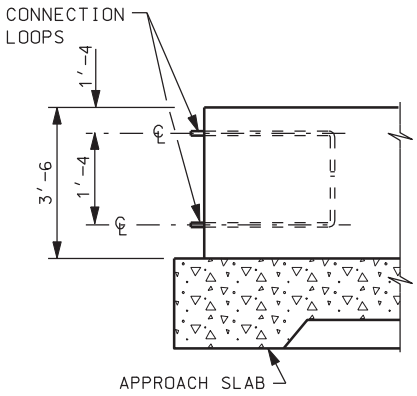


ELEVATION

STANDARD END DETAILS

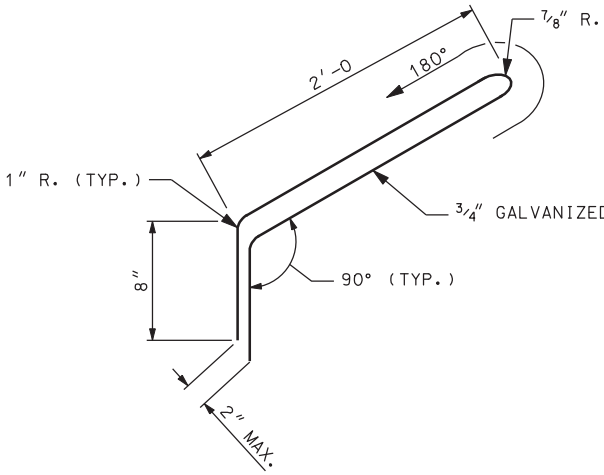


CONNECTION LOOP DETAIL

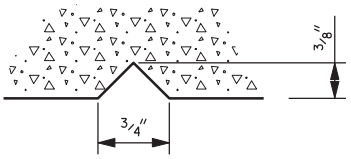


TYPICAL SECTION

THRU STRUCTURE NUMBER

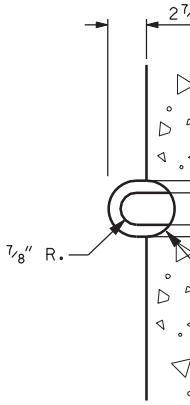


CON

DGN File:IP_PWPcdms1717\4433_C-352-42_PAREND01.dgn

02-MAY-2005

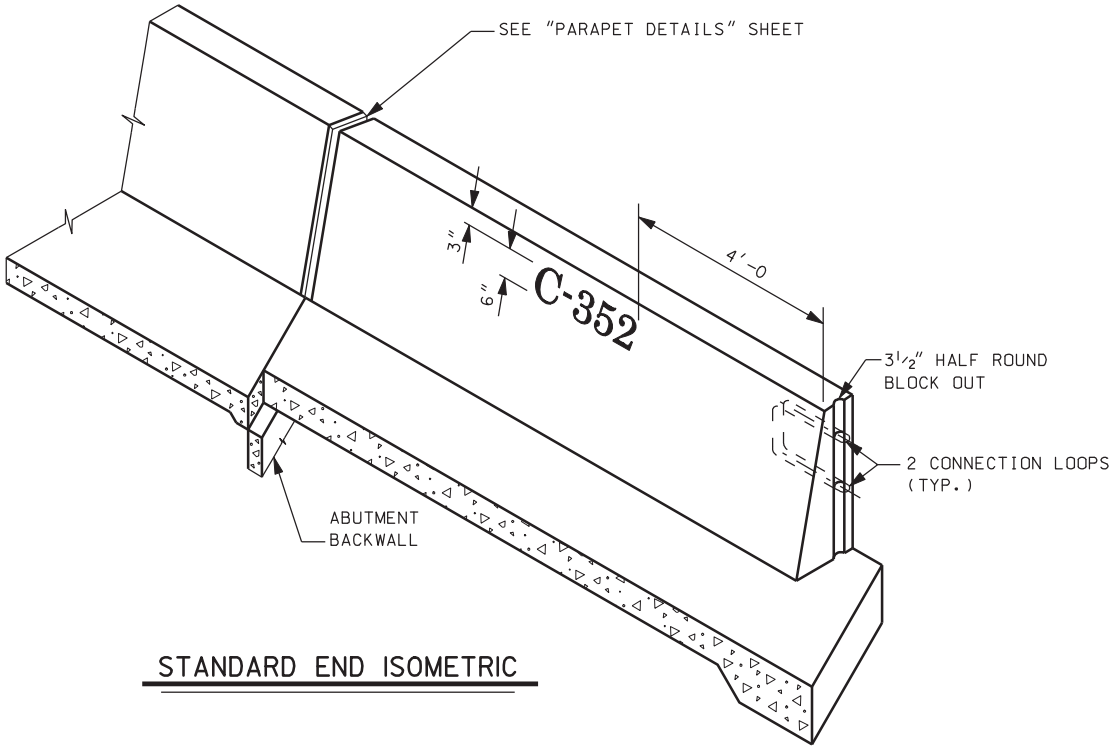


STANDARD END ISOMETRIC

D STEEL BAR

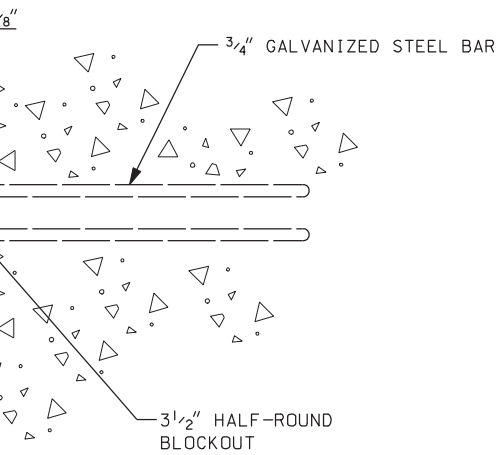


NECTION BAR END DETAIL

## NOTES:

1. INSTALL CONNECTION LOOPS AT ALL PARAPET ENDS.
2. CONNECTION LOOPS NOT INCLUDED IN REINFORCING STEEL SCHEDULE.
3. SEE ROADWAY DRAWING DT-08 FOR TRANSITION FROM PARAPET TO PRECAST BARRIER.

| NO. | DATE | BY | REMARKS |
|---|---|---|---|

REVISIONS

UTAH DEPARTMENT OF TRANSPORTATION
SALT LAKE CITY, UTAH
STRUCTURES DIVISION
PARSONS

DESIGN STB 12/04 CHECK MBD 01/05
DRAWN TA 12/04 CHECK MBD 01/05
QUANT. STB 12/04 CHECK MBD 01/05

APPROVAL RECOMM. DATE SENIOR DESIGN ENGR.
APPROVED FOR USE BY UDOT DATE UDOT BRIDGE ENGR.

I-15: CORRIDOR IN UTAH COUNTY
I-15 OVER UPRR AND SR-114 IN LINDON
PARAPET END DETAILS
PROJECT NUMBER SP-15-6(52)241

UTAH
COUNTY

C-352W
DRG. NO.

SHT. 42 OF 53

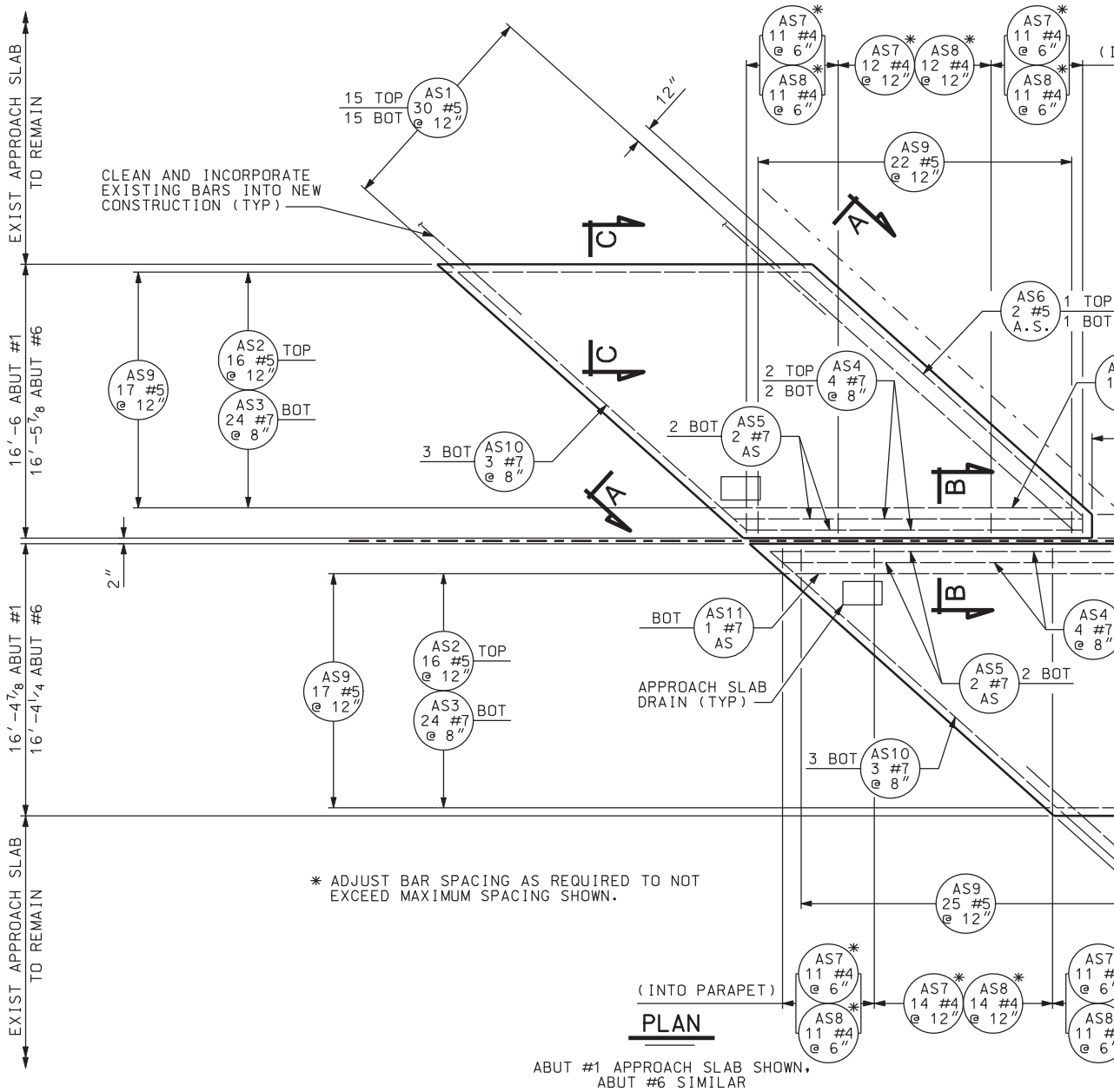


* ADJUST BAR SPACING AS REQUIRED TO NOT EXCEED MAXIMUM SPACING SHOWN.

## PLAN

ABUT #1 APPROACH SLAB SHOWN, ABUT #6 SIMILAR

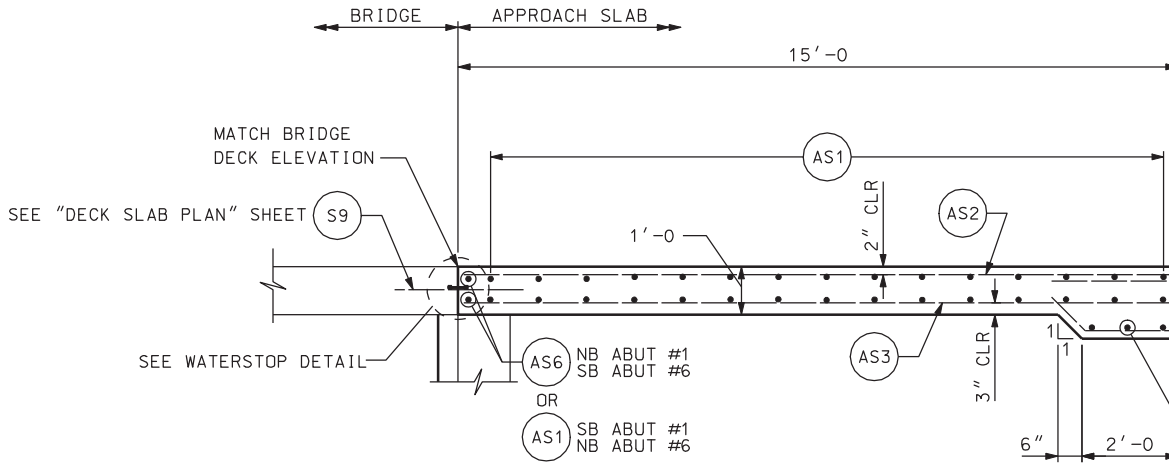


## SECTION A-A

DGN File: IP_PWPcdms1717\4433_C-352-43_APPSLB01.dgn
02-MAY-2005

INTO PARAPET)

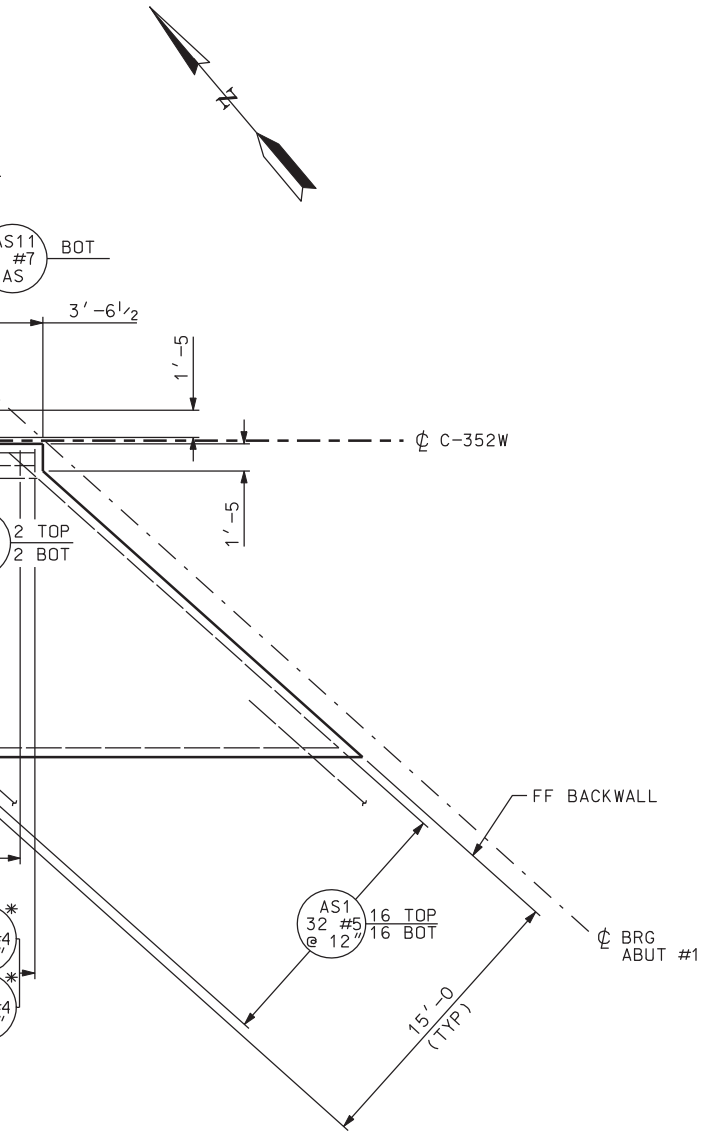


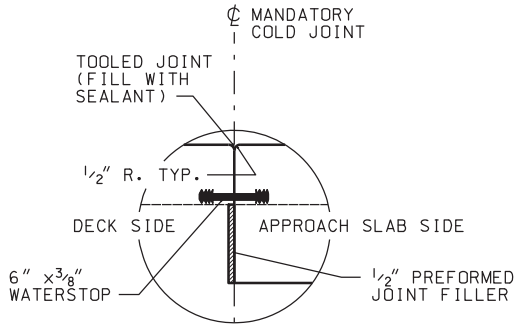


## WATERSTOP DETAIL

| APPROACH SLAB DRAIN LOCATIONS | |
|---|---|
| STATION | OFFSET |
| 1700+04.01 | 2'-10 LT |
| 1700+10.34 | 2'-10 RT |

## NOTES

1. SEE "APPROACH SLAB DETAILS" SHEET FOR SECTIONS B-B AND C-C
2. SEE "APPROACH SLAB DRAIN DETAILS"
3. APPROACH SLAB DRAIN LOCATIONS SHOWN ARE AT CENTER OF DRAIN GRATE. SEE "APPROACH SLAB DRAIN DETAILS"
4. SEE "APPROACH SLAB DETAILS" SHEET FOR CORNER REINFORCING DETAIL.
5. SEE "SCREED ELEVATIONS" SHEETS FOR APPROACH SLAB ELEVATIONS.

| QUANTITIES STRUCTURAL CONCRETE | |
|---|---|
| NB & SB ABUT#1 & ABUT #6 SLABS | 61.7 CY |

| NO. | DATE | BY | REMARKS |
|---|---|---|---|
| | | | |

REVISIONS

UTAH DEPARTMENT OF TRANSPORTATION
SALT LAKE CITY, UTAH
STRUCTURES DIVISION
PARSONS

DESIGN HM 12/04 CHECK MBD 01/05
DRAWN TA 12/04 CHECK MBD 01/05
QUANT. STB 12/04 CHECK MBD 01/05

APPROVAL RECOMM. DATE SENIOR DESIGN ENGR.
APPROVED FOR USE BY UDOT DATE UDOT BRIDGE ENGR.

I-15; CORRIDOR IN UTAH COUNTY
I-15 OVER UPRR AND SR-114 IN LINDON
APPROACH SLAB PLAN

PROJECT NUMBER SP-15-6(52)241

UTAH
COUNTY

C-352W
DRG. NO.

SHT. 43 OF 53

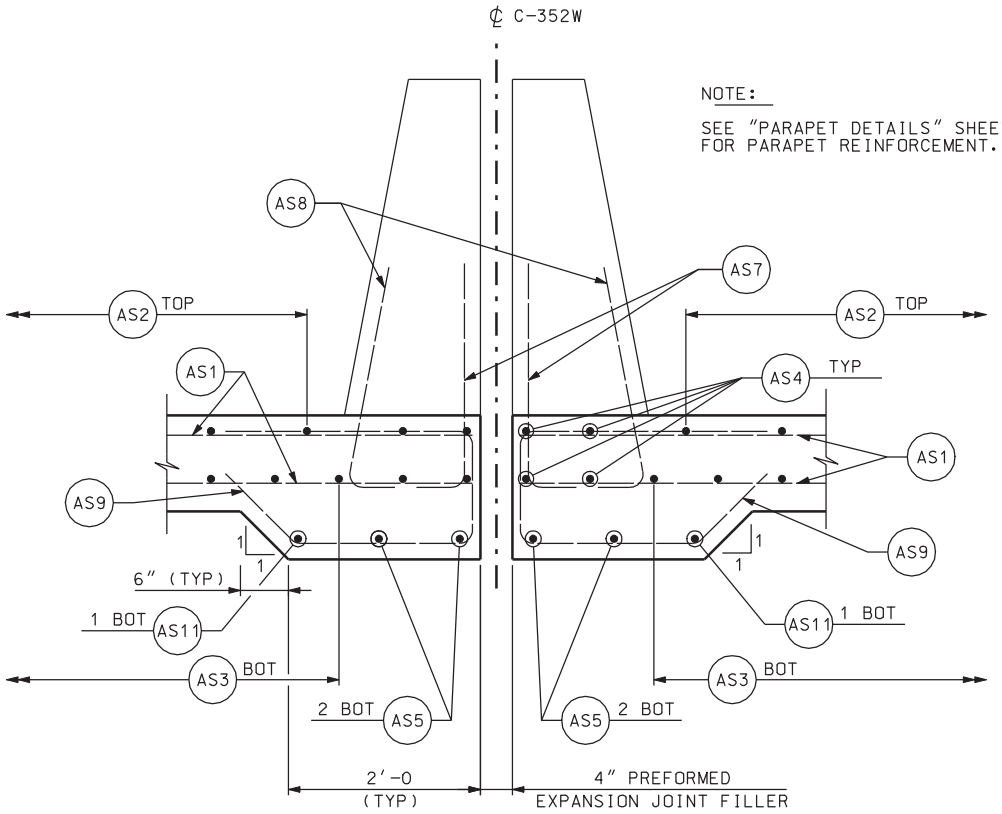


## SECTION B-B

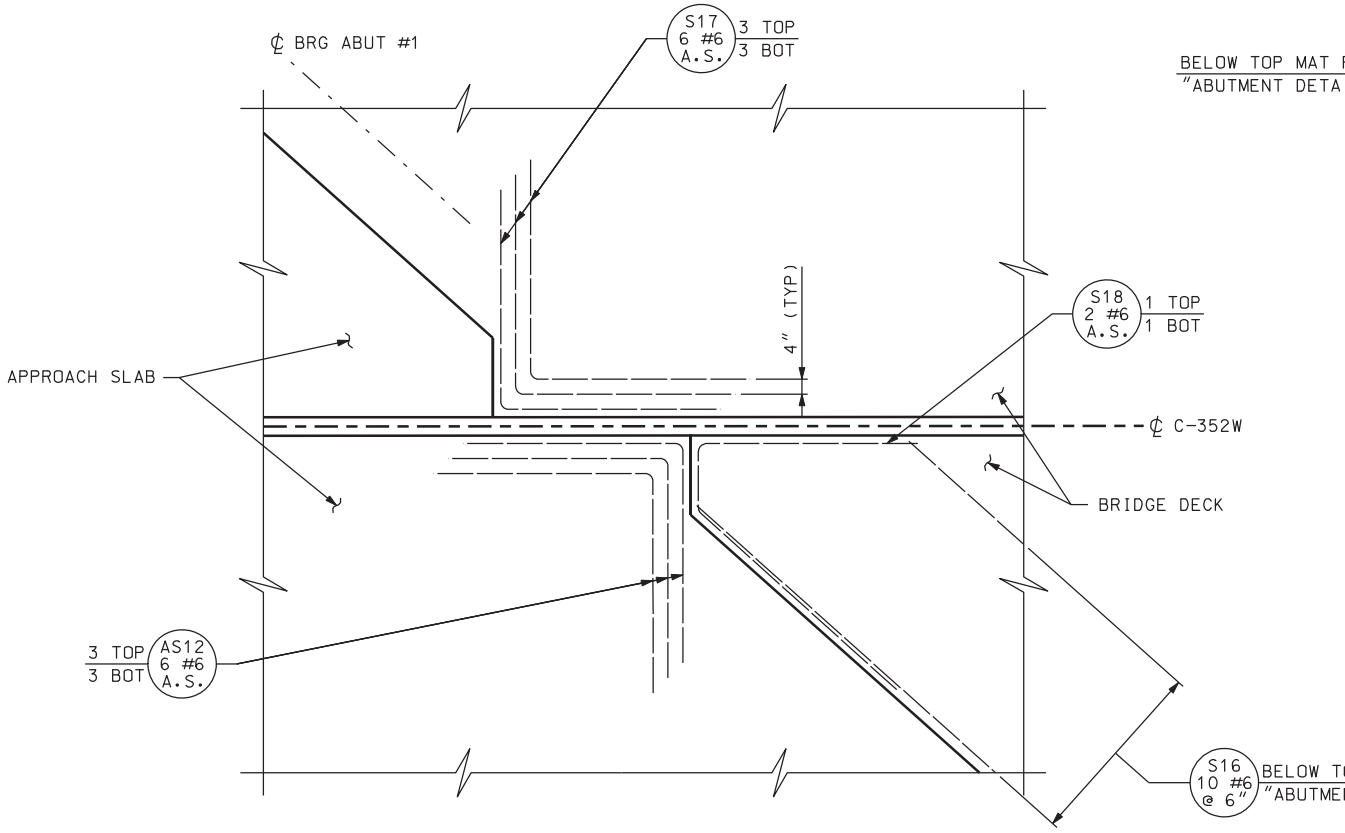


## CORNER F

DGN File: IP_PWPcdms1717\4433_C-352-44_APPSLB02.dgn

02-MAY-2005

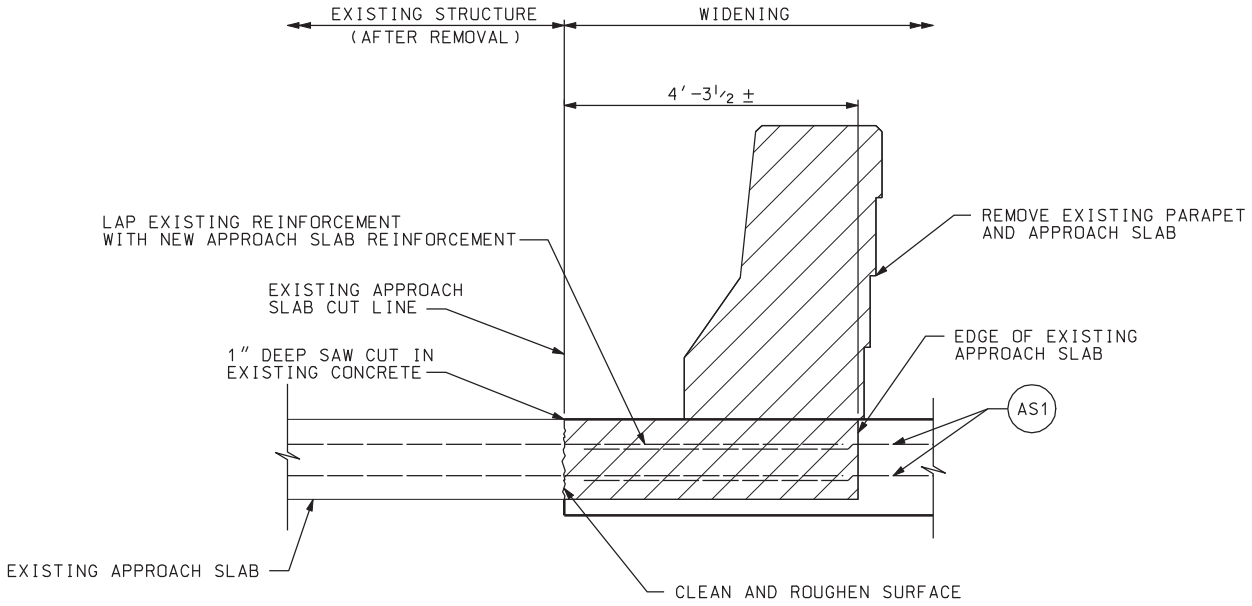


## SECTION C-C

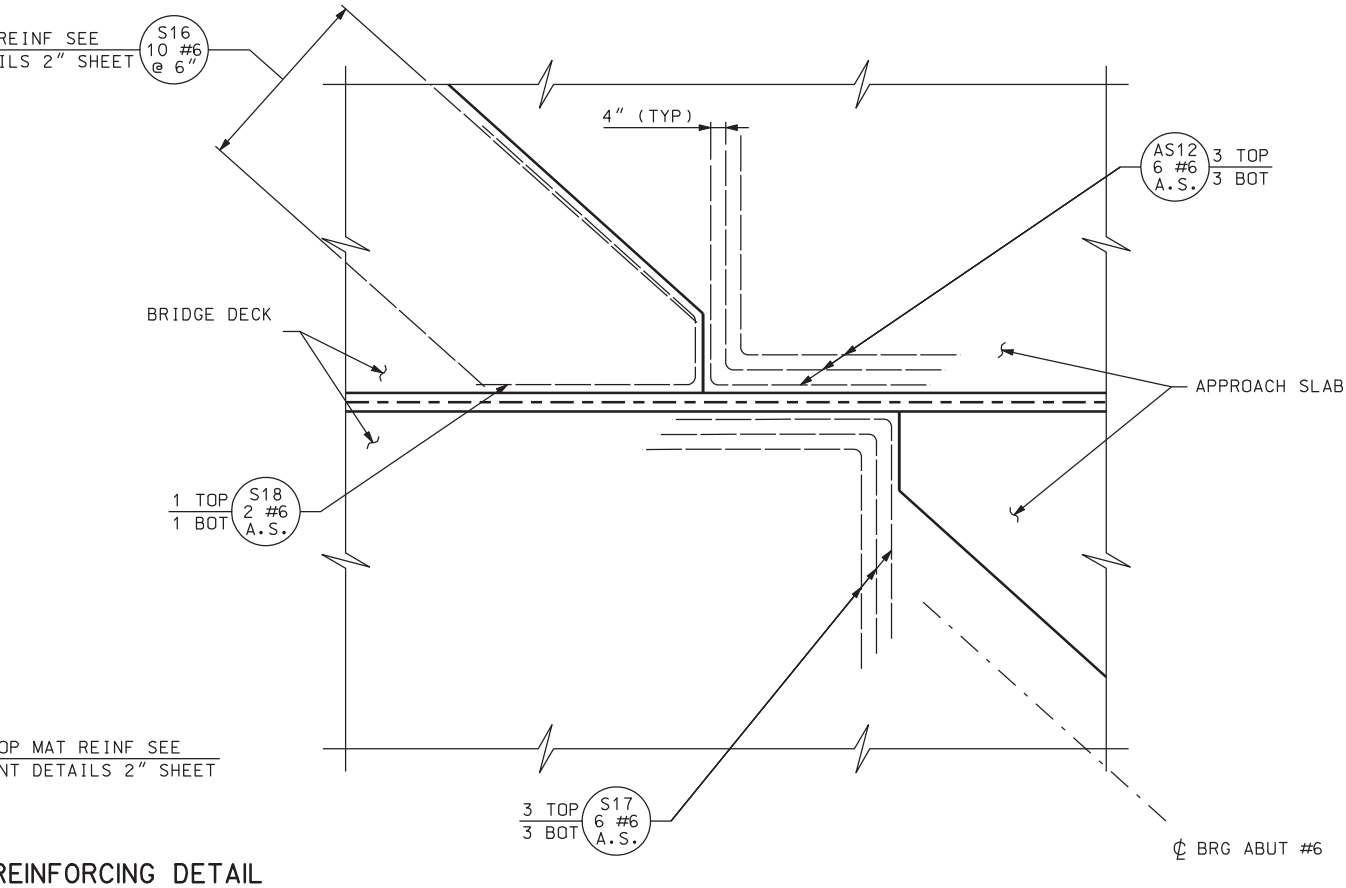


## REINFORCING DETAIL

| NO. | DATE | BY | REMARKS |
|---|---|---|---|
| | | | |

REVISIONS

UTAH DEPARTMENT OF TRANSPORTATION
SALT LAKE CITY, UTAH
STRUCTURES DIVISION
PARSONS

DESIGN HM 12/04 CHECK MBD 01/05
DRAWN TA 12/04 CHECK MBD 01/05
QUANT. STB 12/04 CHECK MBD 01/05

APPROVAL RECOMM. DATE SENIOR DESIGN ENGR.
APPROVED FOR USE BY UDOT DATE UDOT BRIDGE ENGR.

I-15; CORRIDOR IN UTAH COUNTY
I-15 OVER UPRR AND SR-114 IN LINDON
APPROACH SLAB DETAILS

PROJECT NUMBER SP-15-6(52)241

UTAH
COUNTY

C-352W
DRG. NO.

SHT. 44 OF 53

TYPICAL PLAN




SECTION A-A

ROTATE AS7 BA
FRONT FACE 90
CLEAR APPROAC
SLAB BLOCK OU
APPROACH SLAB

SEE ROAD
DRAWINGS

DGN File:IP_PWPcdns1717\4433_C-352-45_APPDRN01.dgn

02-MAY-2005

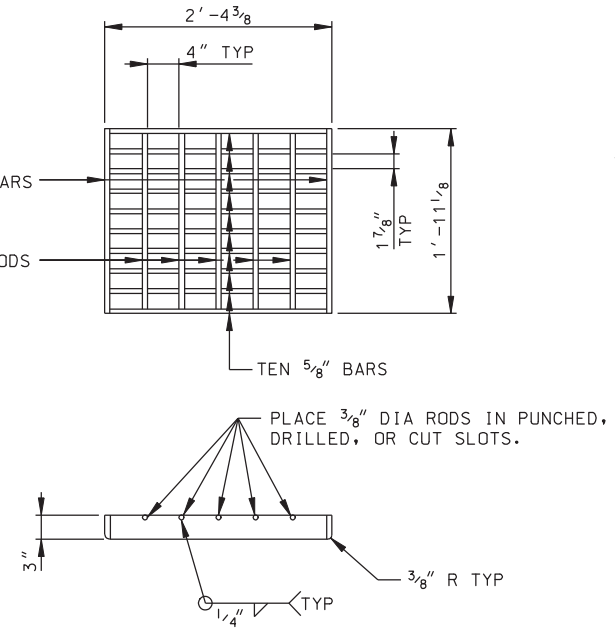


GRATE DETAIL

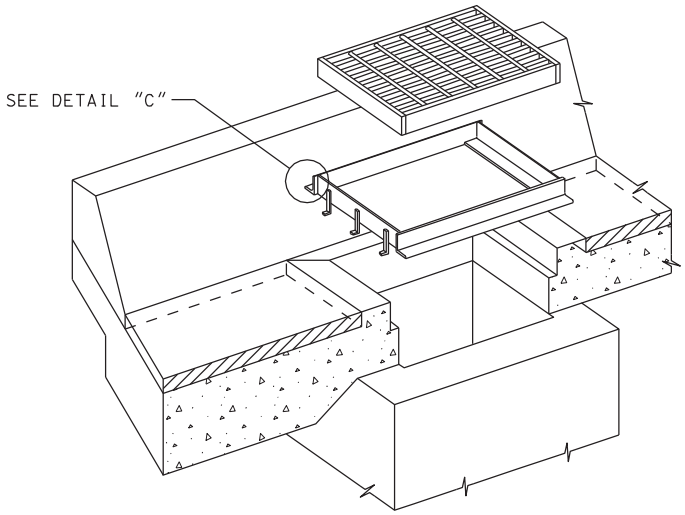


ISOMETRIC

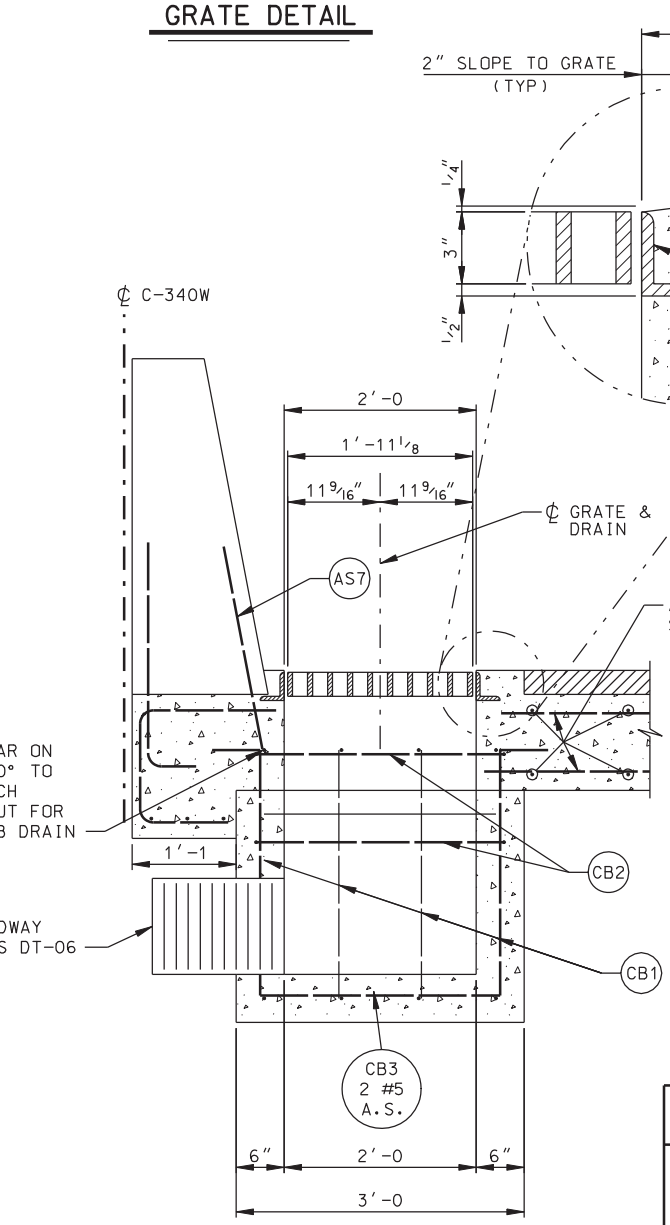


SECTION B-B

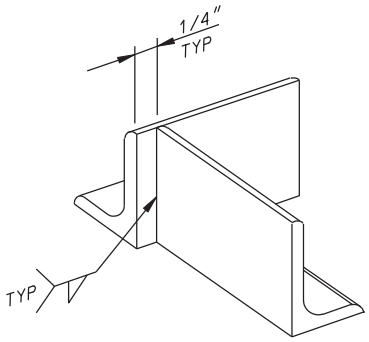


DETAIL "C"

## GENERAL NOTES

1. FIELD CUT OR BEND APPROACH SLAB REINFORCING TO CLEAR APPROACH SLAB DRAINS.
2. SEE "APPROACH SLAB PLAN" FOR THE ACTUAL LOCATION OF THE DRAIN.

## QUANTITIES

| | | |
|---|---|---|
| STRUCTURAL CONCRETE QUANTITIES<br>2 CATCH BASIN AT 0.5 CY EA | STRUCTURAL CONCRETE | |
| | NB & SB ABUTMENT 1 | 1.0 CY |
| STRUCTURAL STEEL QUANTITY<br>2 GRATE AND FRAME AT 273 LBS EA | STRUCTURAL STEEL | |
| | NB & SB ABUTMENT 1 | 546 LBS |

| NO. | DATE | BY | REMARKS |
|---|---|---|---|
| | | | |

REVISIONS

UTAH DEPARTMENT OF TRANSPORTATION
SALT LAKE CITY, UTAH
STRUCTURES DIVISION
PARSONS

DESIGN STB 12/04 CHECK MBD 01/05
DRAWN TA 12/04 CHECK MBD 01/05
QUANT. STB 12/04 CHECK MBD 01/05

APPROVAL RECOMM. DATE SENIOR DESIGN ENGR.
APPROVED FOR USE BY UDOT DATE UDOT BRIDGE ENGR.

I-15; CORRIDOR IN UTAH COUNTY
I-15 OVER UPRR AND SR-114 IN LINDON
APPROACH SLAB DRAIN DETAILS

PROJECT NUMBER SP-15-6(52)241

UTAH
COUNTY

C-352W
DRG. NO.

SHT. 45 OF 53

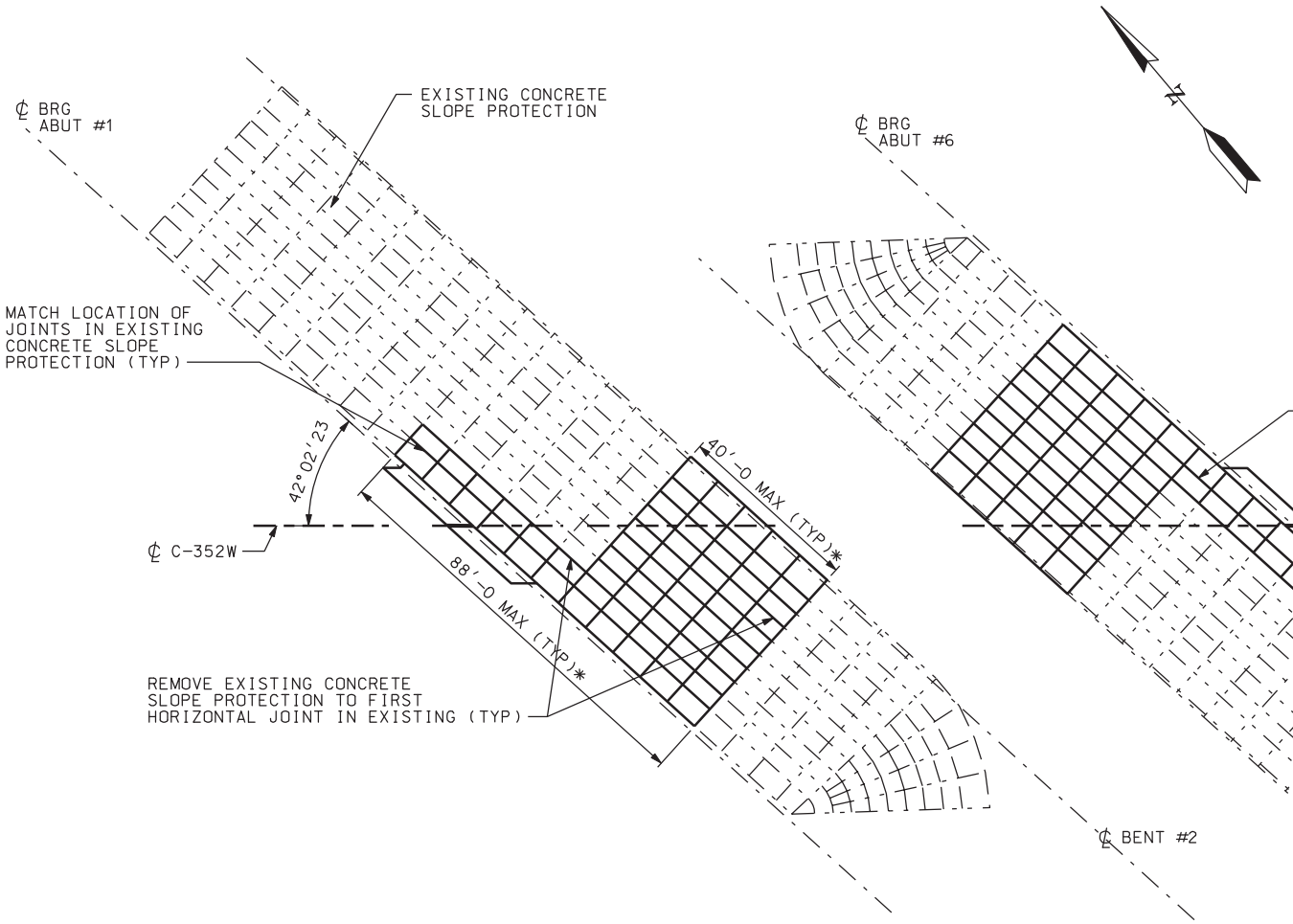


* MATCH EXISTING DIMENSIONS

## PLAN

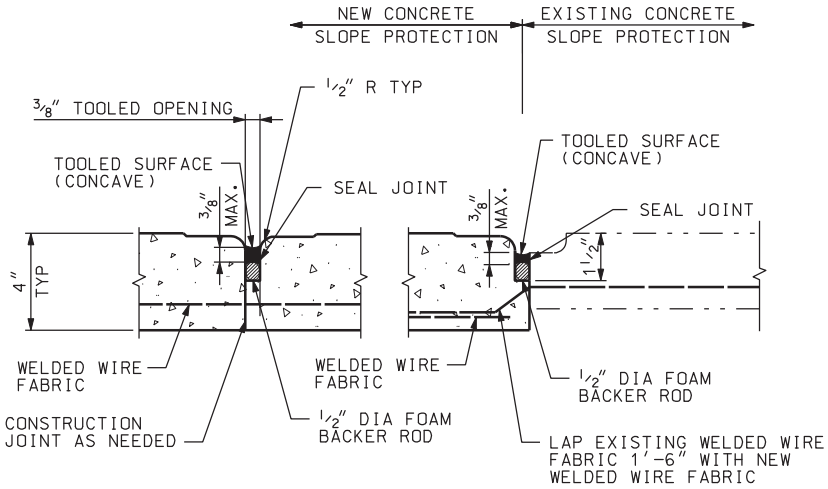


## VERTICAL JOINT DETAIL

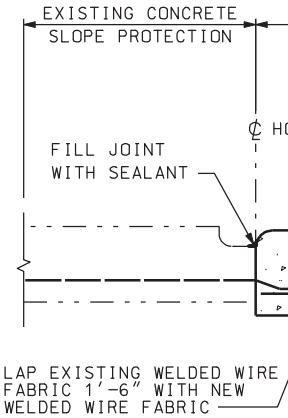


## HO

DGN File: IP_PWPcdnsl717\4433_C-352-46_SLOPE01.dgn

02-MAY-2005

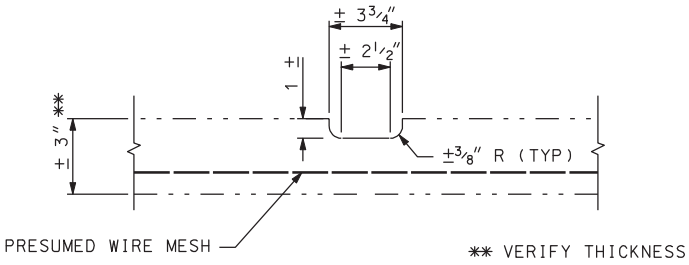


## EXISTING JOINT DETAIL

(HORIZONTAL & VERTICAL)

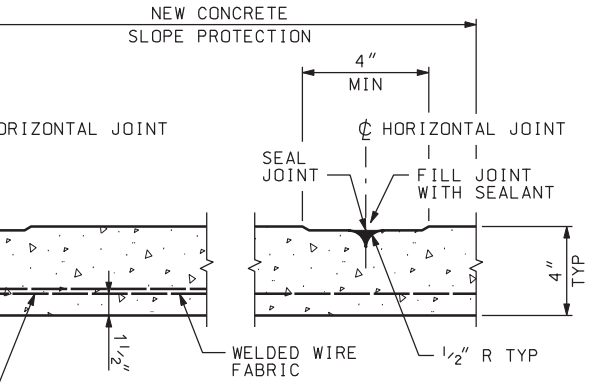


## RIZONTAL JOINT DETAIL

## NOTES

1. QUANTITIES GIVEN FOR CONCRETE SLOPE PROTECTION ARE ESTIMATES ONLY AND ARE BASED ON THE EXPOSED FINISHED CONCRETE SURFACE AREA AT TIME OF PLACEMENT.
2. MATCH SPACING OF HORIZONTAL AND VERTICAL JOINTS OF THE EXISTING SLOPE PROTECTION.
3. MATCH THE ELEVATION AND SLOPE OF THE EXISTING SLOPE PROTECTION.
4. JUST PRIOR TO FINAL INSPECTION SEAL JOINTS BETWEEN THE CONCRETE SLOPE PROTECTION AND ALL STRUCTURAL MEMBERS.
5. USE CLASS A (AE) CONCRETE FOR ALL SLOPE PROTECTION.
6. USE WELDED WIRE FABRIC 6″ x 6″ – W 1.4 x W 1.4.
7. IF FIELD CONDITIONS VARY FROM WHAT IS SHOWN ON THE PLANS NOTIFY THE ENGINEER
8. ONLY REMOVE AND REPLACE FULL PANELS (FROM EXISTING JOINT TO EXISTING JOINT).

| QUANTITIES SLOPE PAVING | |
|---|---|
| REPLACE CONCRETE SLOPE PROTECTION | 523 SQ YDS |

| NO. | DATE | BY | REMARKS |
|---|---|---|---|
| | | | |

REVISIONS

UTAH DEPARTMENT OF TRANSPORTATION
SALT LAKE CITY, UTAH
STRUCTURES DIVISION
PARSONS

DESIGN STB 12/04 CHECK MBD 01/05
DRAWN TA 12/04 CHECK MBD 01/05
QUANT. STB 12/04 CHECK MBD 01/05

APPROVAL RECOMM. DATE SENIOR DESIGN ENGR.
APPROVED FOR USE BY UDOT DATE UDOT BRIDGE ENGR.

I-15; CORRIDOR IN UTAH COUNTY
I-15 OVER UPRR AND SR-114 IN LINDON
CONCRETE SLOPE PROTECTION 1
PROJECT NUMBER SP-15-6(52)241

UTAH COUNTY

C-352W DRG. NO.

SHT. 46 OF 53

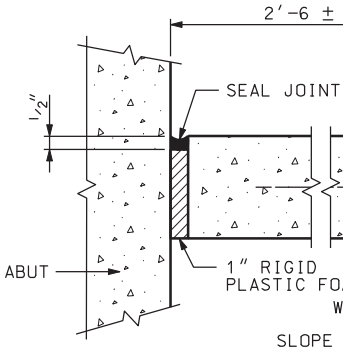


DETAIL

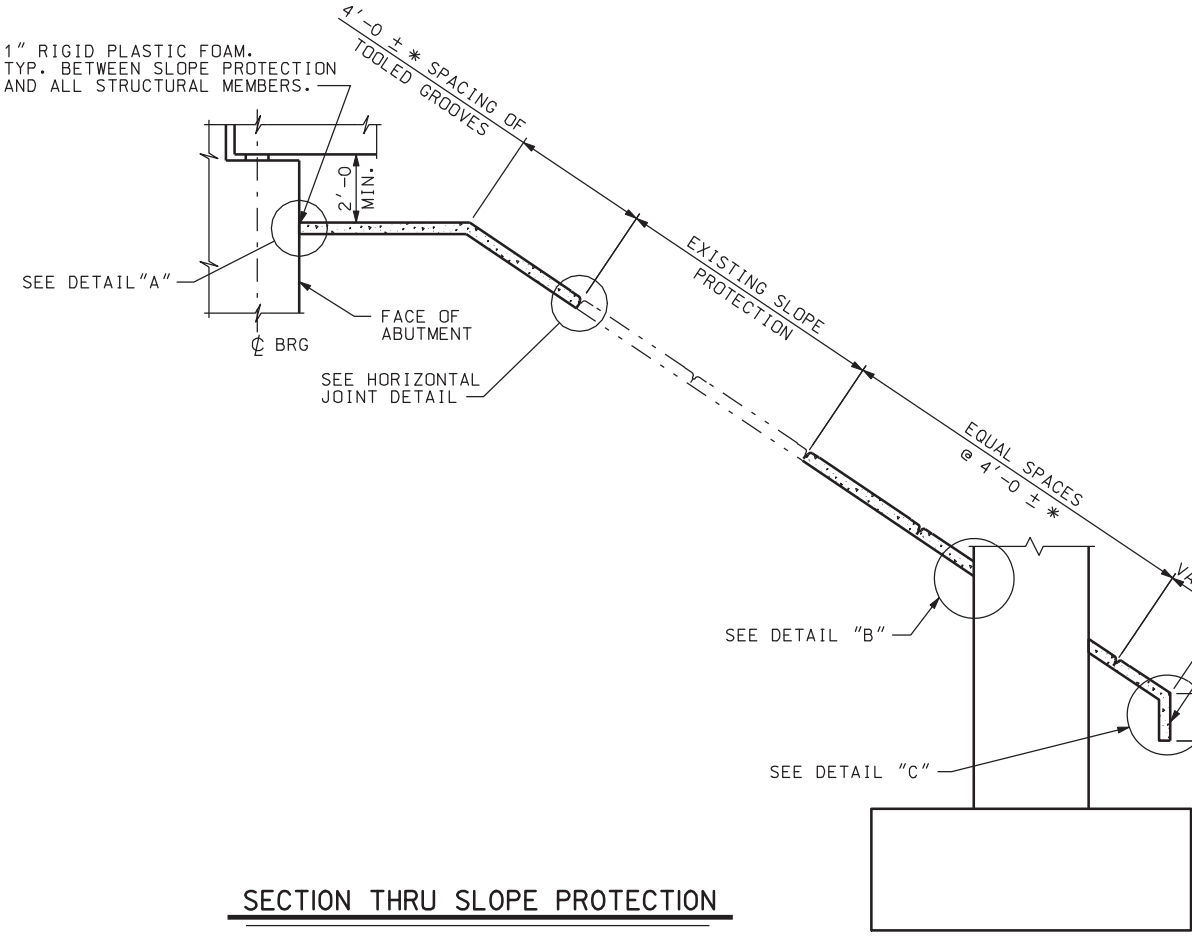


SECTION THRU SLOPE PROTECTION

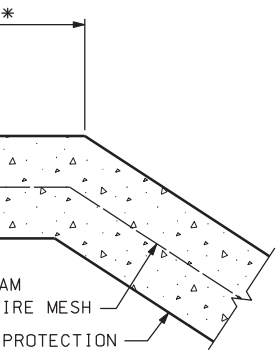


DETAIL "A"

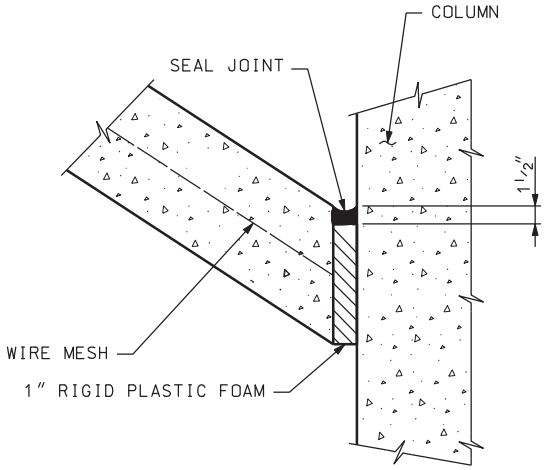


DETAIL "B"

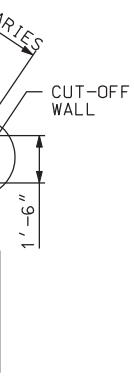


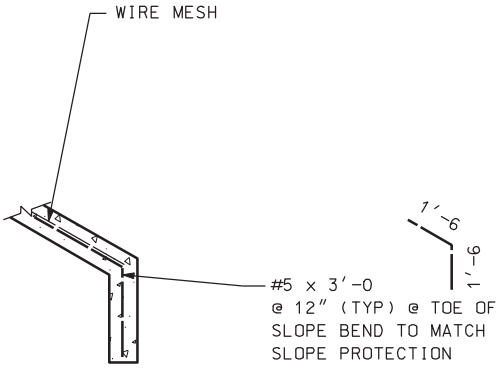


DETAIL "C"

| NO. | DATE | BY | REMARKS |
|---|---|---|---|
| | | | |

REVISIONS

UTAH DEPARTMENT OF TRANSPORTATION
SALT LAKE CITY, UTAH
STRUCTURES DIVISION
PARSONS

DESIGN STB 12/04 CHECK MBD 01/05
DRAWN TA 12/04 CHECK MBD 01/05
QUANT. STB 12/04 CHECK MBD 01/05

APPROVAL RECOMM. DATE SENIOR DESIGN ENGR.
APPROVED FOR USE BY UDOT DATE UDOT BRIDGE ENGR.

I-15; CORRIDOR IN UTAH COUNTY
I-15 OVER UPRR AND SR-114 IN LINDON
CONCRETE SLOPE PROTECTION 2

PROJECT NUMBER SP-15-6(52)241

UTAH
COUNTY

C-352W
DRG. NO.

SHT. 47 OF 53

# REINFORCING ST

## ABUTMENT #1 NORTH BOUND

| MARK | SIZE | NUM | LENGTH | TOTAL | DIAGRAM |
|---|---|---|---|---|---|
| A1 | 7 | 10 | 18′-1 5/8 | 181′-4 1/4 | |
| A2 | 5 | 2 | 9′-6 1/2 | 19′-1 | A = 7′-10 1/2 |
| A3 | 5 | 2 | 10′-2 3/8 | 20′-4 3/4 | A = 8′-6 3/8 |
| A4 | 5 | 20 | 7′-10 7/8 | 158′-1 1/2 | |
| A5 | NOT USED | | | | |
| A6 | NOT USED | | | | |
| A7 | 5 | 1 | 6′-0 3/8 | 6′-0 3/8 | A = 1′-10 1/2 |
| A8 | 5 | 19 | 7′-5 5/8 | 141′-10 7/8 | A = 2′-7 1/8 |
| A9 | NOT USED | | | | |
| A10 | NOT USED | | | | |
| A11 | 5 | 14 | 5′-7 7/8 | 79′-2 1/4 | |
| A12 | 5 | 34 | 8′-1 7/8 | 277′-3 3/4 | A = 7′-3 7/8 |
| A13 | NOT USED | | | | |
| A14 | 5 | 9 | 18′-1 5/8 | 163′-2 5/8 | |
| A15 | 5 | 2 | 19′-1 3/8* | 38′-2 3/4 | VARIES 18′-9 5/8 TO 19′-5 |
| * AVERAGE LENGTH | | | | | |
| A16 | 5 | 4 | 19′-5 | 77′-8 | |
| A17 | 5 | 20 | 7′-3 1/4 | 145′-5 | |
| A18 | 5 | 80 | 6′-0 3/4 | 485′-0 | A = 5′-1 1/4 |
| A19 | 5 | 5 | 4′-4 1/2 | 21′-10 1/2 | A = 3′-5 |
| A20 | 5 | 6 | 2′-10 1/8 | 17′-0 3/4 | |
| A21 | 8 | 3 | 8′-6 7/8 | 25′-8 5/8 | |
| A22 | 11 | 9 | 14′-10 1/4 | 133′-8 1/4 | |
| A23 | 11 | 9 | 14′-10 1/4 | 133′-8 1/4 | |
| A24 | 5 | 7 | 13′-10 1/4 | 96′-11 3/4 | |
| A25 | 5 | 25 | 2′-8 3/8 | 67′-5 3/8 | |
| A26 | 5 | 19 | 3′-0 | 57′-0 | |

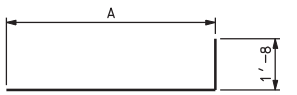


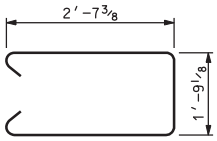


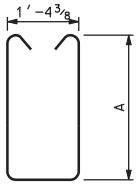


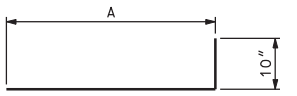


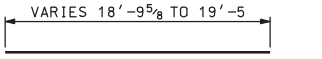


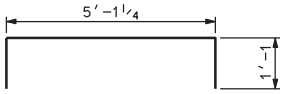


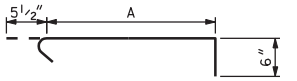


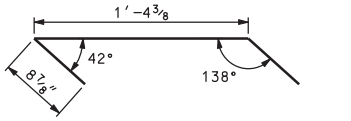


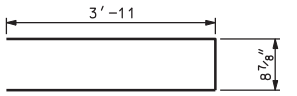


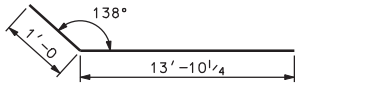


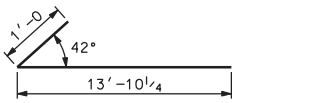


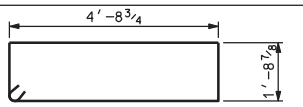


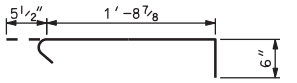


## ABUTMENT #1 SOUTH BOUND

| MARK | SIZE | NUM | LENGTH | TOTAL |
|---|---|---|---|---|
| A1 | 7 | 10 | 18′-1 1/8 | 180′-11 1/4 |
| A2 | 5 | 2 | 9′-6 | 19′-0 |
| A3 | 5 | 2 | 10′-2 3/8 | 20′-4 3/4 |
| A4 | 5 | 20 | 7′-11 1/8 | 158′-6 1/2 |
| A5 | NOT USED | | | |
| A6 | NOT USED | | | |
| A7 | 5 | 1 | 5′-10 1/8 | 5′-10 1/8 |
| A8 | 5 | 19 | 7′-6 1/8 | 142′-8 3/8 |
| A9 | NOT USED | | | |
| A10 | NOT USED | | | |
| A11 | 5 | 13 | 5′-11 3/8 | 77′-3 7/8 |
| A12 | 5 | 14 | 8′-5 3/8 | 118′-3 1/4 |
| A13 | 5 | 19 | 8′-3 3/4 | 157′-11 1/4 |
| A14 | 5 | 15 | 18′-1 1/8 | 247′-4 7/8 |
| A15 | NOT USED | | | |
| A16 | NOT USED | | | |
| A17 | 5 | 20 | 7′-3 1/4 | 145′-5 |
| A18 | 5 | 80 | 6′-0 3/4 | 485′-0 |
| A19 | NOT USED | | | |
| A20 | 5 | 6 | 2′-10 1/8 | 17′-0 3/4 |
| A21 | 8 | 3 | 8′-6 7/8 | 25′-8 5/8 |
| A22 | 11 | 9 | 14′-10 1/4 | 133′-8 1/4 |
| A23 | 11 | 9 | 14′-10 1/4 | 133′-8 1/4 |
| A24 | 5 | 7 | 14′-5 1/2 | 101′-2 1/2 |
| A25 | 5 | 25 | 2′-8 3/8 | 67′-5 3/8 |
| A26 | 5 | 19 | 3′-0 | 57′-0 |

DGN File:IP_PWPcdns1717\4433_C-352-48_RBSCH01.dgn
02-MAY-2005

## ...TEEL SCHEDULE

| A | DIAGRAM |
|---|---|
| | |
| A | |
| 7'-10 | |
| 8'-6 3/8 | |
| 1'-9 3/4 | |
| A | |
| 1'-9 3/8 | |
| 2'-7 3/8 | |
| A | |
| 7'-7 3/8 | |
| 7'-5 3/4 | |

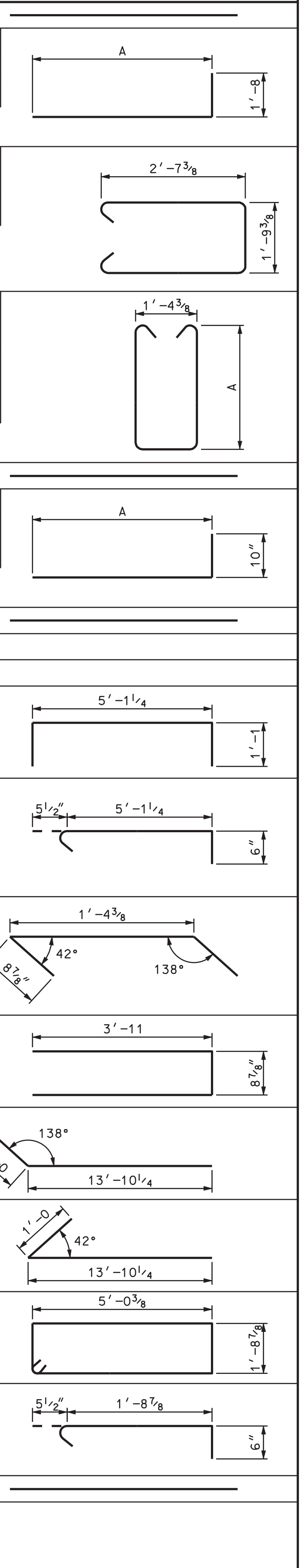


| | MARK | SIZE | NUM | LENGTH | TOTAL | A |
|---|---|---|---|---|---|---|
| ABUTMENT #6 NORTH BOUND | A1 | 7 | 10 | 18'-0 7/8 | 180'-8 3/4 | |
| | | | | | | A |
| | A2 | 5 | 2 | 9'-5 3/4 | 18'-11 1/2 | 7'-9 3/4 |
| | A3 | 5 | 2 | 10'-8 3/8 | 21'-4 3/4 | 9'-0 3/8 |
| | A4 | 5 | 20 | 8'-0 1/4 | 160'-5 | |
| | A5 | NOT USED | | | | |
| | A6 | NOT USED | | | | |
| | | | | | | A |
| | A7 | 5 | 1 | 5'-11 5/8 | 5'-11 5/8 | 1'-10 1/8 |
| | A8 | 5 | 19 | 7'-6 3/8 | 143'-1 1/8 | 2'-7 1/2 |
| | A9 | NOT USED | | | | |
| | A10 | NOT USED | | | | |
| | A11 | 5 | 15 | 5'-1 1/8 | 76'-4 7/8 | |
| | | | | | | A |
| | A12 | 5 | 14 | 7'-6 1/8 | 105'-1 3/4 | 6'-8 1/8 |
| | A13 | 5 | 19 | 7'-5 | 140'-11 | 6'-7 |
| | A14 | 5 | 15 | 18'-0 7/8 | 271'-1 1/8 | |
| | A15 | NOT USED | | | | |
| | A16 | NOT USED | | | | |
| | A17 | 5 | 20 | 7'-3 1/4 | 145'-5 | |
| | A18 | 5 | 80 | 6'-0 3/4 | 485'-0 | |
| | A19 | NOT USED | | | | |

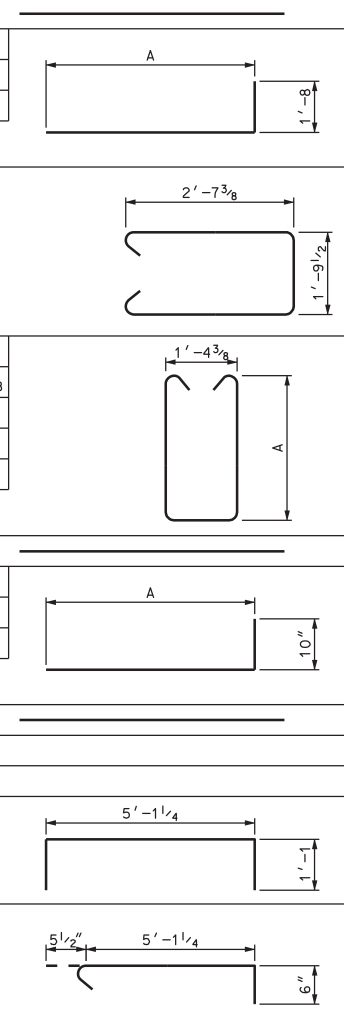


REVISIONS

| NO. | DATE | BY | REMARKS |
|---|---|---|---|

UTAH DEPARTMENT OF TRANSPORTATION
SALT LAKE CITY, UTAH
STRUCTURES DIVISION
PARSONS

DESIGN HM 12/04 CHECK MBD 1/05
DRAWN TA 12/04 CHECK MBD 1/05
QUANT. STB 12/04 CHECK MBD 1/05

APPROVAL RECOMM. ____ DATE ____ SENIOR DESIGN ENGR.
APPROVED FOR USE BY UDOT ____ DATE ____ UDOT BRIDGE ENGR.

I-15; CORRIDOR IN UTAH COUNTY
I-15 OVER UPRR AND SR-114 IN LINDON
REINFORCING STEEL SCHEDULE 1
PROJECT NUMBER SP-15-6(52)241

UTAH
COUNTY
C-352W
DRG. NO.

SHT. 48 OF 53

# REINFORCING ST

## ABUTMENT #6 NORTH BOUND

| MARK | SIZE | NUM | LENGTH | TOTAL | DIAGRAM |
|---|---|---|---|---|---|
| A20 | 5 | 6 | 2′-10 1/8 | 17′-0 3/4 | 4′-1 3/8; 42°; 8 7/8″; 138° |
| A21 | 8 | 3 | 8′-6 7/8 | 25′-8 5/8 | 3′-11; 8 7/8″ |
| A22 | 11 | 9 | 14′-10 1/4 | 133′-8 1/4 | 138°; 1′-0; 13′-10 1/4 |
| A23 | 11 | 9 | 14′-10 1/4 | 133′-8 1/4 | 1′-0; 42°; 13′-10 1/4 |
| A24 | 5 | 7 | 12′-9 | 89′-3 | 4′-2 1/8; 1′-8 7/8 |
| A25 | 5 | 25 | 2′-8 3/8 | 67′-5 3/8 | 5 1/2″; 1′-8 7/8; 6″ |
| A26 | 5 | 19 | 3′-0 | 57′-0 | |

## ABUTMENT #6 SOUTH BOUND

| MARK | SIZE | NUM | LENGTH | TOTAL |
|---|---|---|---|---|
| A20 | 5 | 6 | 2′-10 1/8 | 17′-0 3/4 |
| A21 | 8 | 3 | 8′-6 7/8 | 25′-8 5/8 |
| A22 | 11 | 9 | 14′-10 1/4 | 133′-8 1/4 |
| A23 | 11 | 9 | 14′-10 1/4 | 133′-8 1/4 |
| A24 | 5 | 7 | 12′-10 1/2 | 90′-1 1/2 |
| A25 | 5 | 25 | 2′-8 3/8 | 67′-5 3/8 |
| A26 | 5 | 19 | 3′-0 | 57′-0 |

## ABUTMENT #6 SOUTH BOUND

| MARK | SIZE | NUM | LENGTH | TOTAL | A |
|---|---|---|---|---|---|
| A1 | 7 | 10 | 18′-0 | 180′-0 | |
| A2 | 5 | 2 | 9′-4 7/8 | 18′-9 3/4 | 7′-8 7/8 |
| A3 | 5 | 2 | 10′-8 3/8 | 21′-4 3/4 | 9′-0 3/8 |
| A4 | 5 | 20 | 7′-11 3/8 | 158′-11 1/2 | |
| A5 | NOT USED | | | | |
| A6 | NOT USED | | | | |
| A7 | 5 | 1 | 5′-11 1/8 | 5′-11 1/8 | 1′-9 7/8 |
| A8 | 5 | 19 | 7′-5 3/8 | 141′-6 1/8 | 2′-7 |
| A9 | NOT USED | | | | |
| A10 | NOT USED | | | | |
| A11 | 5 | 14 | 5′-1 7/8 | 72′-2 1/4 | |
| A12 | 5 | 15 | 7′-6 7/8 | 113′-7 1/8 | 6′-8 7/8 |
| A13 | 5 | 19 | 7′-6 | 142′-6 | 6′-8 |
| A14 | 5 | 9 | 18′-0 | 162′-0 | |
| A15 | 5 | 2 | 8′-11 3/4* | 37′-11 1/2 | |
| A16 | 5 | 4 | 19′-3 3/8 | 77′-1 1/2 | |
| A17 | 5 | 21 | 7′-3 1/4 | 152′-8 1/4 | |
| A18 | 5 | 84 | 6′-0 3/4 | 509′-3 | 5′-1 1/4 |
| A19 | 5 | 5 | 4′-4 1/2 | 21′-10 1/2 | 3′-5 |

* AVERAGE LENGTH

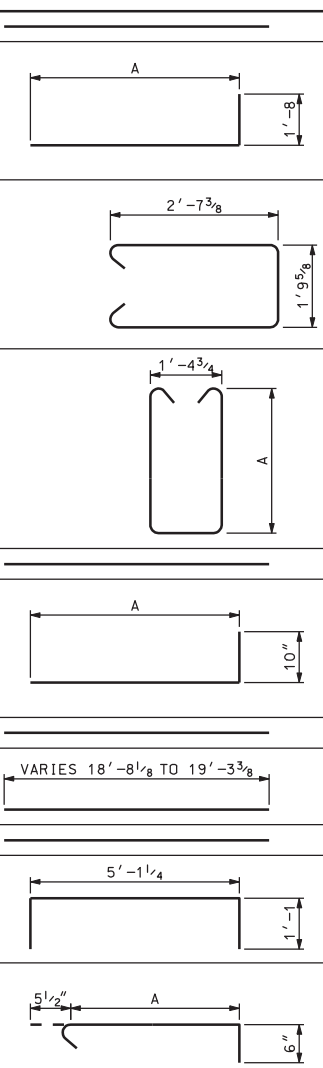


## ABUT #1 FOOTING NB

| MARK | SIZE | NUM | LENGTH | TOTAL |
|---|---|---|---|---|
| AF1 | 5 | 6** | 15′-0 7/8* | 90′-5 1/4 |
| AF2 | 5 | 6 | 13′-7 3/4 | 81′-10 1/2 |
| AF3 | 6 | 15 | 8′-5 1/2 | 126′-10 1/2 |
| AF4 | 7 | 15 | 10′-9 1/2 | 161′-10 1/2 |
| AF5 | 6 | 2 | 5′-8 | 11′-4 |
| AF6 | 7 | 2 | 8′-0 | 16′-0 |

* AVERAGE LENGTH

** TWO EQUAL SETS

## ABUT #1 FOOTING SB

| MARK | SIZE | NUM | LENGTH | TOTAL |
|---|---|---|---|---|
| AF1 | 5 | 12 | 13′-7 3/8 | 163′-4 1/2 |
| AF2 | NOT USED | | | |
| AF3 | 6 | 15 | 8′-5 1/2 | 126′-10 1/2 |
| AF4 | 7 | 15 | 10′-9 1/2 | 161′-10 1/2 |

DGN File:IP_PWPcdms1717\4433_C-352-49_RBSCH02.dgn
02-MAY-2005

# TEEL SCHEDULE

DIAGRAM

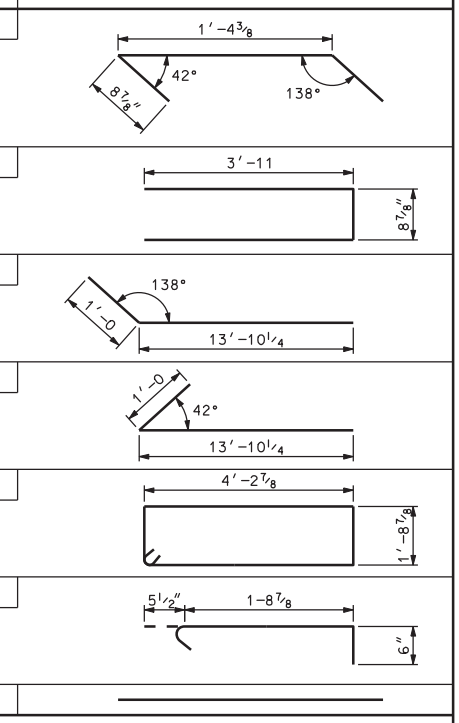


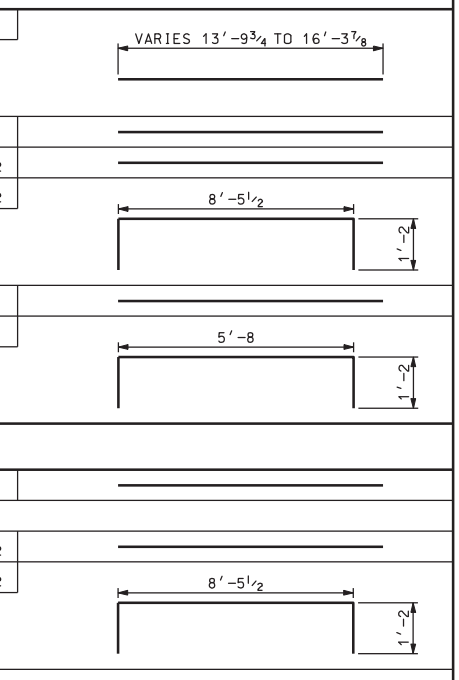


## ABUT #6 FOOTING NB

| MARK | SIZE | NUM | LENGTH | TOTAL |
|---|---|---|---|---|
| AF1 | 5 | 12 | 13′-7 1/8 | 163′-1 1/2 |
| AF2 | NOT USED | | | |
| AF3 | 6 | 15 | 8′-5 1/2 | 126′-10 1/2 |
| AF4 | 7 | 15 | 10′-9 1/2 | 161′-10 1/2 |

DIAGRAM

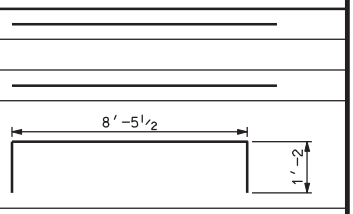


## ABUT #6 FOOTING SB

| MARK | SIZE | NUM | LENGTH | TOTAL |
|---|---|---|---|---|
| AF1 | 5 | 6 ✱✱ | 14′-11 3/8 ✱ | 89′-8 1/4 |
| ✱ AVERAGE LENGTH | | | | |
| ✱✱ TWO EQUAL SETS | | | | |
| AF2 | 5 | 6 | 13′-6 1/4 | 81′-1 1/2 |
| AF3 | 6 | 15 | 8′-5 1/2 | 126′-10 1/2 |
| AF4 | 7 | 15 | 10′-9 1/2 | 161′-10 1/2 |
| AF5 | 6 | 2 | 5′-8 | 11′-4 |
| AF6 | 7 | 2 | 8′-0 | 16′-0 |

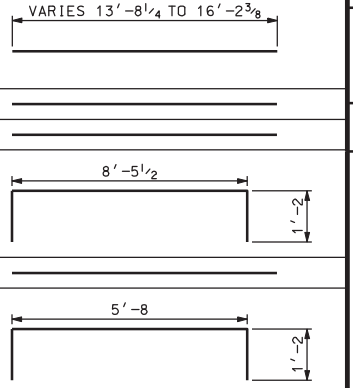


## ALL BENT FTGS NB & SB

| MARK | SIZE | NUM | LENGTH | TOTAL |
|---|---|---|---|---|
| BF1 | 10 | 64 | 17′-8 | 1130′-8 |
| BF2 | 11 | 80 | 17′-8 | 1413′-4 |
| BF3 | 6 | 304 | 8′-8 | 2634′-8 |
| BF4 | 5 | 704 | 4′-8 1/2 | 3314′-8 |

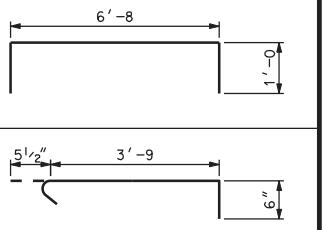


## BENT #2 COLUMN NB

| MARK | SIZE | NUM | LENGTH | TOTAL | A |
|---|---|---|---|---|---|
| C1 | 9 | 22 | 33′-10 | 744′-4 | |
| C2 | 5 | 89 | 15′-7 | 1386′-11 | |
| C3 | 5 | 178 | 5′-7 1/2 | 1001′-3 | 4′-8 |
| C4 | 5 | 356 | 3′-7 1/2 | 1290′-6 | 2′-8 |

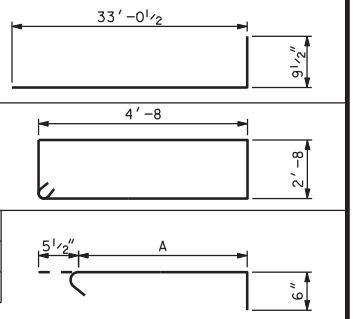


| NO. | DATE | BY | REMARKS |
|---|---|---|---|

REVISIONS

UTAH DEPARTMENT OF TRANSPORTATION
SALT LAKE CITY, UTAH
STRUCTURES DIVISION

PARSONS

DESIGN HM 12/04 CHECK MBD 1/05
DRAWN TA 12/04 CHECK MBD 1/05
QUANT. STB 12/04 CHECK MBD 1/05

APPROVAL RECOMM. DATE SENIOR DESIGN ENGR.
APPROVED FOR USE BY UDOT DATE UDOT BRIDGE ENGR.

I-15; CORRIDOR IN UTAH COUNTY
I-15 OVER UPRR AND SR-114 IN LINDON
REINFORCING STEEL SCHEDULE 2

PROJECT NUMBER SP-15-6(52)241

UTAH
COUNTY

C-352W
DRG. NO.

# REINFORCING ST

## BENT #2 COLUMN SB

| MARK | SIZE | NUM | LENGTH | TOTAL | DIAGRAM |
|---|---|---|---|---|---|
| C1 | 9 | 22 | 34′-1 | 749′-10 | 33′-3½ / 9½″ |
| C2 | 5 | 90 | 15′-7 | 1402′-6 | 4′-8 / 2′-8 |
| C3 | 5 | 180 | 5′-7½ | 1012′-6 | A: 4′-8 |
| C4 | 5 | 360 | 3′-7½ | 1305′-0 | A: 2′-8 |

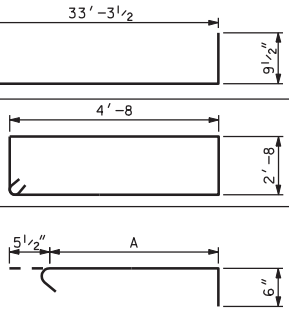


## BENT #3 COLUMN NB

| MARK | SIZE | NUM | LENGTH | TOTAL | DIAGRAM |
|---|---|---|---|---|---|
| C1 | 9 | 22 | 34′-7 | 760′-10 | 33′-9½ / 9½″ |
| C2 | 5 | 91 | 15′-7 | 1418′-1 | 4′-8 / 2′-8 |
| C3 | 5 | 182 | 5′-7½ | 1023′-9 | A: 4′-8 |
| C4 | 5 | 364 | 3′-7½ | 1319′-6 | A: 2′-8 |

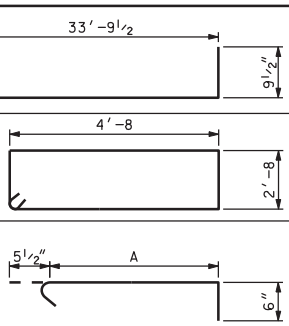


## BENT #3 COLUMN SB

| MARK | SIZE | NUM | LENGTH | TOTAL | DIAGRAM |
|---|---|---|---|---|---|
| C1 | 9 | 22 | 34′-9⅜ | 765′-2¼ | 33′-11⅞ / 9½″ |
| C2 | 5 | 91 | 15′-7 | 1418′-1 | 4′-8 / 2′-8 |
| C3 | 5 | 182 | 5′-7½ | 1023′-9 | A: 4′-8 |
| C4 | 5 | 364 | 3′-7½ | 1319′-6 | A: 2′-8 |

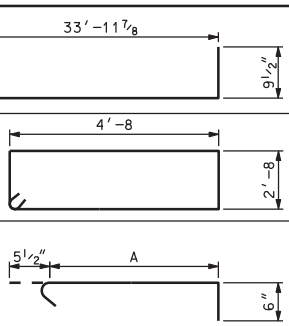


## BENT #4 COLUMN NB

| MARK | SIZE | NUM | LENGTH | TOTAL | DIAGRAM |
|---|---|---|---|---|---|
| C1 | 9 | 22 | 28′-3¾ | 622′-10½ | 27′-6¼ / 9½″ |
| C2 | 5 | 77 | 15′-7 | 1199′-11 | 4′-8 / 2′-8 |
| C3 | 5 | 154 | 5′-7½ | 866′-3 | A: 4′-8 |
| C4 | 5 | 308 | 3′-7½ | 1116′-6 | A: 2′-8 |

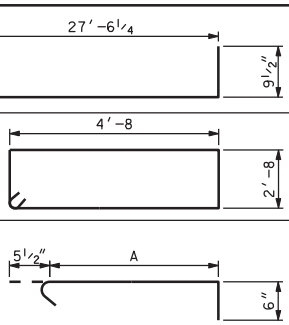


## BENT #4 COLUMN SB

| MARK | SIZE | NUM | LENGTH | TOTAL |
|---|---|---|---|---|
| C1 | 9 | 22 | 28′-5⅝ | 626′-3¾ |
| C2 | 5 | 77 | 15′-7 | 1199′-11 |
| C3 | 5 | 154 | 5′-7½ | 866′-3 |
| C4 | 5 | 308 | 3′-7½ | 1116′-6 |

## BENT #5 COLUMN NB

| MARK | SIZE | NUM | LENGTH | TOTAL |
|---|---|---|---|---|
| C1 | 9 | 22 | 29′-3 | 643′-6 |
| C2 | 5 | 79 | 15′-7 | 1231′-1 |
| C3 | 5 | 158 | 5′-7½ | 888′-9 |
| C4 | 5 | 316 | 3′-7½ | 1145′-6 |

## BENT #5 COLUMN SB

| MARK | SIZE | NUM | LENGTH | TOTAL |
|---|---|---|---|---|
| C1 | 9 | 22 | 29′-4¼ | 645′-9½ |
| C2 | 5 | 79 | 15′-7 | 1231′-1 |
| C3 | 5 | 158 | 5′-7½ | 888′-9 |
| C4 | 5 | 316 | 3′-7½ | 1145′-6 |

## BENT #2 CAP NB

| MARK | SIZE | NUM | LENGTH | TOTAL |
|---|---|---|---|---|
| B1 | 11 | 8 | 25′-2¾ | 201′-10 |
| B2 | 11 | 4 | 21′-5 | 85′-8 |
| B3 | 5 | 8 | 21′-2¾ | 169′-10 |
| B4 | 5 | 2 | 14′-0½ | 28′-1 |
| B5 | 5 | 18 | 14′-4½* | 258′-9 |
| B6 | 5 | 15 | 14′-4½* | 215′-7½ |

* AVERAGE LENGTH

DGN File:IP_PWPcdnsl717\4433_C-352-50_RBSCH03.dgn
02-MAY-2005

# TEEL SCHEDULE

| DIAGRAM |
|---|
| 27′-8 1/8 × 9 1/2″ |
| 4′-8 × 2′-8 |
| A: 4′-8; 2′-8 — 5 1/2″, A, 6″ |
| 28′-5 1/2 × 9 1/2″ |
| 4′-8 × 2′-8 |
| A: 4′-8; 2′-8 — 5 1/2″, A, 6″ |
| 28′-6 3/4 × 9 1/2″ |
| 4′-8 × 2′-8 |
| A: 4′-8; 2′-8 — 5 1/2″, A, 6″ |
| 21′-2 3/4 × 2′-0 |
| 8′-9, 7′-8 1/4, 8°, 9°, 4′-11 3/4 |
| A: 2′-8 7/8; 3′-10 1/2 — B: 3′-10 5/8; 2′-9 — 3′-5, VARIES A TO B |

## BENT #2 CAP NB

| MARK | SIZE | NUM | LENGTH | TOTAL | A | B |
|---|---|---|---|---|---|---|
| B7 | 5 | 66 | 4′-4 1/2 | 288′-9 | 3′-5 | 3′-5 |
| B8 | 5 | 36 ** | 4′-3 1/4 * | 153′-9 | 2′-8 7/8 | 3′-10 5/8 |
| B9 | 5 | 30 ** | 4′-3 1/4 * | 128′-1 1/2 | 3′-10 1/2 | 2′-9 |

5 1/2″, VARIES A TO B, 6″

* AVERAGE LENGTH

** TWO EQUAL SETS

| MARK | SIZE | NUM | LENGTH | TOTAL |
|---|---|---|---|---|
| B10 | 5 | 6 | 5′-1 | 30′-6 |
| B11 | 8 | 10 | 3′-10 | 38′-4 |
| B12 | 8 | 4 | 6′-11 | 27′-8 |
| B13 | 5 | 2 | 6′-1 | 12′-2 |

3′-5 × 10″; 3′-0 × 11″; 1′-8 × 11″

## BENT #2 CAP SB

| MARK | SIZE | NUM | LENGTH | TOTAL |
|---|---|---|---|---|
| B1 | 11 | 8 | 25′-2 1/8 | 201′-5 |
| B2 | 11 | 4 | 21′-4 1/4 | 85′-5 |
| B3 | 5 | 8 | 21′-2 1/8 | 169′-5 |
| B4 | 5 | 2 | 14′-5 5/8 | 28′-11 1/4 |

21′-2 1/8 × 2′-0; 8′-8 1/8, 7′-8 7/8, 8°, 8°, 4′-11 3/4

| MARK | SIZE | NUM | LENGTH | TOTAL | A | B |
|---|---|---|---|---|---|---|
| B5 | 5 | 17 | 14′-4 1/2 * | 244′-4 1/2 | 2′-8 7/8 | 3′-10 5/8 |
| B6 | 5 | 15 | 14′-2 7/8 * | 213′-7 1/8 | 3′-9 | 2′-8 7/8 |

* AVERAGE LENGTH

3′-5, VARIES A TO B

| MARK | SIZE | NUM | LENGTH | TOTAL | A | B |
|---|---|---|---|---|---|---|
| B7 | 5 | 64 | 4′-4 1/2 | 280′-0 | 3′-5 | 3′-5 |
| B8 | 5 | 34 ** | 4′-3 1/4 * | 145′-2 1/2 | 2′-8 7/8 | 3′-10 5/8 |
| B9 | 5 | 30 ** | 4′-2 1/2 * | 126′-3 | 3′-9 | 2′-8 7/8 |

5 1/2″, VARIES A TO B, 6″

* AVERAGE LENGTH

** TWO EQUAL SETS

| MARK | SIZE | NUM | LENGTH | TOTAL |
|---|---|---|---|---|
| B10 | 5 | 6 | 5′-1 | 30′-6 |
| B11 | 8 | 10 | 3′-10 | 38′-4 |
| B12 | 8 | 4 | 6′-11 | 27′-8 |
| B13 | 5 | 2 | 6′-1 | 12′-2 |

3′-5 × 10″; 3′-0 × 11″; 1′-8 × 11″

| NO. | DATE | BY | REMARKS |
|---|---|---|---|
| | | | |

REVISIONS

UTAH DEPARTMENT OF TRANSPORTATION
SALT LAKE CITY, UTAH
STRUCTURES DIVISION

PARSONS

DESIGN HM 12/04 CHECK MBD 1/05
DRAWN TA 12/04 CHECK MBD 1/05
QUANT. STB 12/04 CHECK MBD 1/05

APPROVAL RECOMM. DATE SENIOR DESIGN ENGR.
APPROVED FOR USE BY UDOT DATE UDOT BRIDGE ENGR.

I-15; CORRIDOR IN UTAH COUNTY
I-15 OVER UPRR AND SR-114 IN LINDON
REINFORCING STEEL SCHEDULE 3

PROJECT NUMBER SP-15-6(52)241

UTAH
COUNTY

C-352W
DRG. NO.

SHT. 50 OF 53

# REINFORCING ST

## BENT #3 CAP NB

| MARK | SIZE | NUM | LENGTH | TOTAL | A | B |
|---|---|---|---|---|---|---|
| B1 | 11 | 8 | 25′-4 1/8 | 202′-9 | | |
| B2 | 11 | 4 | 21′-6 1/4 | 86′-1 | | |
| B3 | 5 | 8 | 21′-4 1/8 | 170′-9 | | |
| B4 | 5 | 2 | 14′-2 | 28′-4 | | |
| B5 | 5 | 18 | 14′-4 3/8 * | 258′-6 3/4 | 2′-8 7/8 | 3′-10 1/2 |
| B6 | 5 | 15 | 14′-4 1/8 * | 215′-1 7/8 | 3′-10 1/4 | 2′-8 7/8 |
| B7 | 5 | 66 | 4′-4 1/2 | 288′-9 | 3′-5 | 3′-5 |
| B8 | 5 | 36 ** | 4′-3 1/4 * | 153′-9 | 2′-8 7/8 | 3′-10 1/2 |
| B9 | 5 | 30 ** | 4′-3 1/8 * | 127′-9 3/4 | 3′-10 1/4 | 2′-8 7/8 |
| B10 | 5 | 6 | 5′-1 | 30′-6 | | |
| B11 | 8 | 10 | 3′-10 | 38′-4 | | |
| B12 | 8 | 4 | 6′-11 | 27′-8 | | |
| B13 | 5 | 2 | 6′-1 | 12′-2 | | |

* AVERAGE LENGTH

** TWO EQUAL SETS

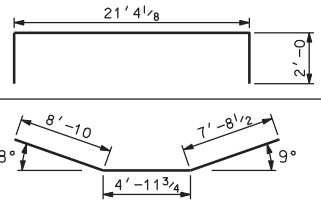


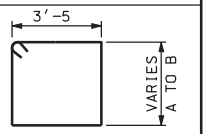


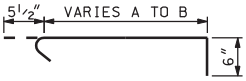


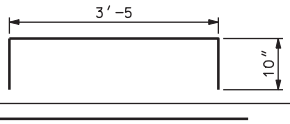


## BENT #3 CAP SB

| MARK | SIZE | NUM | LENGTH | TOTAL | A | B |
|---|---|---|---|---|---|---|
| B1 | 11 | 8 | 25′-2 1/4 | 201′-6 | | |
| B2 | 11 | 4 | 21′-4 3/8 | 85′-5 1/2 | | |
| B3 | 5 | 8 | 21′-2 1/4 | 169′-6 | | |
| B4 | 5 | 2 | 14′-4 3/4 | 28′-9 1/2 | | |
| B5 | 5 | 17 | 14′-4 1/2 * | 244′-4 1/4 | 2′-8 7/8 | 3′-10 5/8 |
| B6 | 5 | 15 | 14′-3 1/8 * | 213′-10 7/8 | 3′-9 1/4 | 2′-8 7/8 |
| B7 | 5 | 64 | 4′-4 1/2 | 280′-0 | 3′-5 | 3′-5 |
| B8 | 5 | 34 ** | 4′-3 1/4 * | 145′-2 1/2 | 2′-8 7/8 | 3′-10 5/8 |
| B9 | 5 | 30 ** | 4′-2 5/8 * | 126′-6 3/4 | 3′-9 1/4 | 2′-8 7/8 |
| B10 | 5 | 6 | 5′-1 | 30′-6 | | |

* AVERAGE LENGTH

** TWO EQUAL SETS

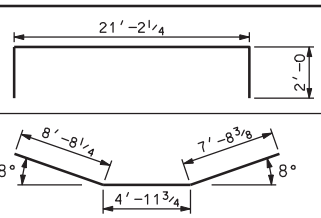


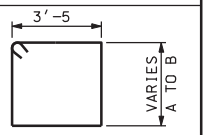


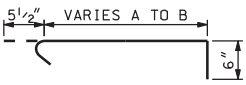


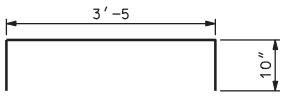


## BENT #3 CAP SB

| MARK | SIZE | NUM | LENGTH | TOTAL |
|---|---|---|---|---|
| B11 | 8 | 10 | 3′-10 | 38′-4 |
| B12 | 8 | 4 | 6′-11 | 27′-8 |
| B13 | 5 | 2 | 6′-1 | 12′-2 |

## BENT #4 CAP NB

| MARK | SIZE | NUM | LENGTH | TOTAL |
|---|---|---|---|---|
| B1 | 11 | 8 | 25′-4 3/8 | 202′-11 |
| B2 | 11 | 4 | 21′-6 1/2 | 86′-2 |
| B3 | 5 | 8 | 21′-4 3/8 | 170′-11 |
| B4 | 5 | 2 | 14′-3 1/8 | 28′-6 1/4 |
| B5 | 5 | 18 | 14′-4 1/2 * | 258′-9 |
| B6 | 5 | 16 | 14′-3 7/8 * | 229′-2 |
| B7 | 5 | 68 | 4′-4 1/2 | 297′-6 |
| B8 | 5 | 36 ** | 4′-3 1/4 * | 153′-9 |
| B9 | 5 | 32 ** | 4′-3 * | 136′-0 |
| B10 | 5 | 6 | 5′-1 | 30′-6 |
| B11 | 8 | 10 | 3′-10 | 38′-4 |
| B12 | 8 | 4 | 6′-11 | 27′-8 |
| B13 | 5 | 2 | 6′-1 | 12′-2 |

* AVERAGE LENGTH

** TWO EQUAL SETS

## BENT #4 CAP SB

| MARK | SIZE | NUM | LENGTH | TOTAL |
|---|---|---|---|---|
| B1 | 11 | 8 | 25′-0 7/8 | 200′-7 |
| B2 | 11 | 4 | 21′-3 | 85′-0 |
| B3 | 5 | 8 | 21′-0 7/8 | 168′-7 |
| B4 | 5 | 2 | 14′-3 1/2 | 28′-7 |
| B5 | 5 | 17 | 14′-4 1/2 * | 244′-4 1/2 |
| B6 | 5 | 16 | 14′-3 1/4 * | 228′-4 |

* AVERAGE LENGTH

DGN File:IP_PWPcdns1717\4433_C-352-51_RBSCH04.dgn
02-MAY-2005

# TEEL SCHEDULE

DIAGRAM

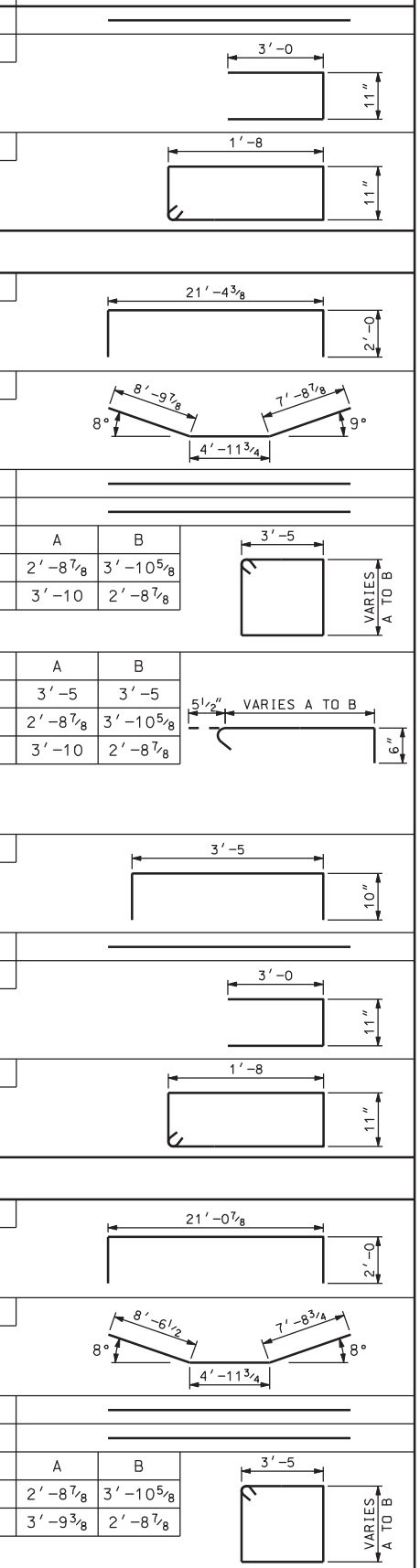


## BENT #4 CAP SB

| MARK | SIZE | NUM | LENGTH | TOTAL | A | B |
|---|---|---|---|---|---|---|
| B7 | 5 | 66 | 4′-4 1/2 | 288′-9 | 3′-5 | 3′-5 |
| B8 | 5 | 34 ** | 4′-3 1/4 * | 145′-2 1/2 | 2′-8 7/8 | 3′-10 5/8 |
| B9 | 5 | 32 ** | 4′-2 5/8 * | 135′-0 | 3′-9 3/8 | 2′-8 7/8 |

* AVERAGE LENGTH

** TWO EQUAL SETS

| MARK | SIZE | NUM | LENGTH | TOTAL |
|---|---|---|---|---|
| B10 | 5 | 6 | 5′-1 | 30′-6 |
| B11 | 8 | 10 | 3′-10 | 38′-4 |
| B12 | 8 | 4 | 6′-11 | 27′-8 |
| B13 | 5 | 2 | 6′-1 | 12′-2 |

## BENT #5 CAP NB

| MARK | SIZE | NUM | LENGTH | TOTAL |
|---|---|---|---|---|
| B1 | 11 | 8 | 25′-4 3/8 | 202′-11 |
| B2 | 11 | 4 | 21′-6 1/2 | 86′-2 |
| B3 | 5 | 8 | 21′-4 3/8 | 170′-11 |
| B4 | 5 | 2 | 14′-4 | 28′-8 |

| | | | | | A | B |
|---|---|---|---|---|---|---|
| B5 | 5 | 18 | 14′-4 3/8 * | 258′-6 3/4 | 2′-8 7/8 | 3′-10 1/2 |
| B6 | 5 | 16 | 14′-3 5/8 * | 228′-10 | 3′-9 3/4 | 2′-8 7/8 |

* AVERAGE LENGTH

| | | | | | A | B |
|---|---|---|---|---|---|---|
| B7 | 5 | 68 | 4′-4 1/2 | 297′-6 | 3′-5 | 3′-5 |
| B8 | 5 | 36 ** | 4′-3 1/4 * | 153′-9 | 2′-8 7/8 | 3′-10 1/2 |
| B9 | 5 | 32 ** | 4′-2 7/8 * | 135′-8 | 3′-9 3/4 | 2′-8 7/8 |

* AVERAGE LENGTH

** TWO EQUAL SETS

| MARK | SIZE | NUM | LENGTH | TOTAL |
|---|---|---|---|---|
| B10 | 5 | 6 | 5′-1 | 30′-6 |
| B11 | 8 | 10 | 3′-10 | 38′-4 |
| B12 | 8 | 4 | 6′-11 | 27′-8 |
| B13 | 5 | 2 | 6′-1 | 12′-2 |

| NO. | DATE | BY | REMARKS |
|---|---|---|---|
| | | | |

REVISIONS

UTAH DEPARTMENT OF TRANSPORTATION
SALT LAKE CITY, UTAH
STRUCTURES DIVISION

PARSONS

DESIGN HM 12/04 CHECK MBD 1/05
DRAWN TA 12/04 CHECK MBD 1/05
QUANT. STB 12/04 CHECK MBD 1/05

APPROVAL RECOMM. DATE SENIOR DESIGN ENGR.
APPROVED FOR USE BY UDOT DATE UDOT BRIDGE ENGR.

I-15; CORRIDOR IN UTAH COUNTY
I-15 OVER UPRR AND SR-114 IN LINDON
REINFORCING STEEL SCHEDULE 4

PROJECT NUMBER SP-15-6(52)241

UTAH
COUNTY

C-352W
DRG. NO.

SHT. 51 OF 53

# REINFORCING ST

## BENT #5 CAP SB

| MARK | SIZE | NUM | LENGTH | TOTAL | A | B |
|---|---|---|---|---|---|---|
| B1 | 11 | 8 | 25′-1 | 200′-8 | | |
| B2 | 11 | 4 | 21′-3 1/8 | 85′-0 1/2 | | |
| B3 | 5 | 8 | 21′-1 | 168′-8 | | |
| B4 | 5 | 2 | 14′-3 | 28′-6 | | |
| B5 | 5 | 17 | 14′-4 1/2 * | 244′-4 1/2 | 2′-8 7/8 | 3′-10 5/8 |
| B6 | 5 | 16 | 14′-3 3/8 * | 228′-6 | 3′-9 1/2 | 2′-8 7/8 |
| B7 | 5 | 66 | 4′-4 1/2 | 288′-9 | 3′-5 | 3′-5 |
| B8 | 5 | 34 ** | 4′-3 1/4 * | 145′-2 1/2 | 2′-8 7/8 | 3′-10 5/8 |
| B9 | 5 | 32 ** | 4′-2 3/4 * | 135′-4 | 3′-9 1/2 | 2′-8 7/8 |
| B10 | 5 | 6 | 5′-1 | 30′-6 | | |
| B11 | 8 | 10 | 3′-10 | 38′-4 | | |
| B12 | 8 | 4 | 6′-11 | 27′-8 | | |
| B13 | 5 | 2 | 6′-1 | 12′-2 | | |

* AVERAGE LENGTH

** TWO EQUAL SETS

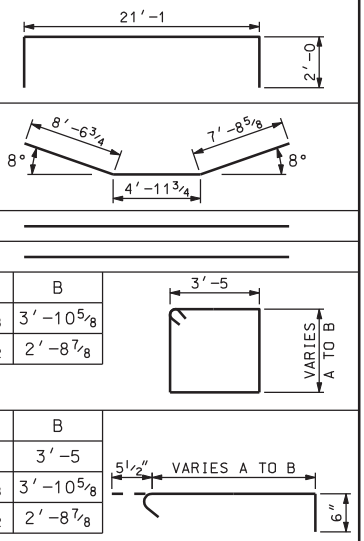


## DECK NB

| MARK | SIZE | NUM | LENGTH | TOTAL | N |
|---|---|---|---|---|---|
| S1 | 5 | 33 ** | 339′-7 1/8 * | 11206′-7 1/8 | 5 |
| S2 | 5 | 646 | 16′-2 | 10443′-8 | |
| S3 | 5 | 64 | 39′-0 | 2496′-0 | |
| S4 | 5 | 284 | 6′-0 | 1704′-0 | |
| S5 | 5 | 67 ** | 8′-5 5/8 * | 567′-4 7/8 | 15′-9 1/8 / 1′-2 1/8 |
| S6 | 5 | 67 ** | 7′-9 3/8 * | 521′-4 1/8 | 1′-1 1/4 / 14′-5 1/2 |
| S7 | 4 | 340 | 3′-2 1/8 | 1080′-2 1/2 | |
| S8 | 4 | 340 | 2′-9 1/4 | 942′-1 | |
| S9 | 8 | 32 | 7′-0 | 224′-0 | |
| S10 | 5 | 36 | 4′-2 3/4 | 152′-3 | |

N = NUMBER OF SPLICES

* AVERAGE LENGTH

** ONE SET OF 17
ONE SET OF 16

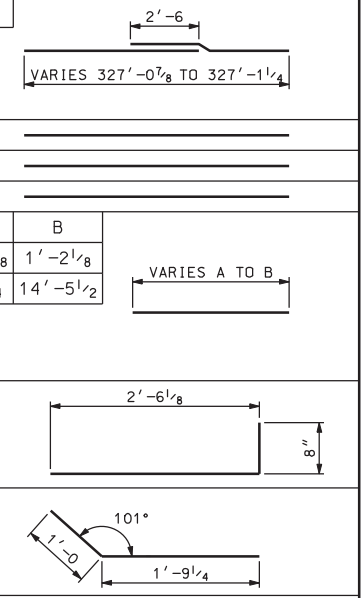


## DECK NB

| MARK | SIZE | NUM | LENGTH | TOTAL |
|---|---|---|---|---|
| S11 | 5 | 3 | 22′-4 1/2 | 67′-1 1/2 |
| S12 | 5 | 3 | 24′-3 | 72′-9 |
| S13 | 5 | 56 | 5′-3 1/8 | 294′-7 |
| S14 | 5 | 40 | 9′-5 1/2 | 378′-4 |
| *** TRIM TO FIT | | | | |
| S15 | 5 | 4 | 4′-1 1/8 | 16′-4 1/2 |
| S16 | 6 | 10 | 15′-0 | 150′-0 |
| S17 | 6 | 6 | 7′-4 | 44′-0 |
| S18 | 6 | 2 | 10′-1 | 20′-2 |

## DECK SB

| MARK | SIZE | NUM | LENGTH | TOTAL |
|---|---|---|---|---|
| S1 | 5 | 33 ** | 339′-4 7/8 * | 11200′-4 7/ |
| * AVERAGE LENGTH | | | | |
| ** ONE SET OF 17 ONE SET OF 16 | | | | |
| S2 | 5 | 646 | 16′-0 5/8 | 10369′-7 3/ |
| S3 | 5 | 64 | 39′-0 | 2496′-0 |
| S4 | 5 | 284 | 6′-0 | 1704′-0 |
| S5 | 5 | 67 ** | 8′-4 7/8 * | 563′-2 5/8 |
| S6 | 5 | 67 ** | 7′-7 1/4 * | 509′-5 3/4 |
| * AVERAGE LENGTH | | | | |
| ** ONE SET OF 34 ONE SET OF 33 | | | | |
| S7 | 4 | 340 | 3′-2 1/8 | 1080′-2 1/2 |
| S8 | 4 | 340 | 2′-9 1/4 | 942′-1 |
| S9 | 8 | 32 | 7′-0 | 224′-0 |
| S10 | 5 | 36 | 4′-2 3/4 | 152′-3 |
| S11 | 5 | 3 | 22′-4 1/8 | 67′-0 3/8 |
| S12 | 5 | 3 | 23′-11 1/4 | 71′-9 3/4 |
| S13 | 5 | 56 | 5′-3 1/8 | 294′-7 |
| S14 | 5 | 40 | 9′-4 3/4 | 375′-10 |
| *** TRIM TO FIT | | | | |

DGN File: IP_PWPcdns1717\4433_C-352-52_RBSCH05.dgn
02-MAY-2005

# TEEL SCHEDULE

| | DIAGRAM |
|---|---|
| | |
| | |
| | 10″ 10″ 135° 135° 7 3/8″ 7 3/8″ 2′-4 3/8 |
| | *** |
| | |
| | |
| | 3′-8 3′-8 |
| | 5′-0 1′-1 132° 4′-0 |

| | | |
|---|---|---|
| N | N = NUMBER OF SPLICES | |
| 5 | 2′-6 VARIES 326′-8 7/8 TO 327′-0 7/8 | |
| | | |
| | | |
| | | |

| A | B | |
|---|---|---|
| 1′-2 1/8 | 15′-7 1/2 | VARIES A TO B |
| 1′-0 3/8 | 14′-2 | |

| | |
|---|---|
| | 2′-6 1/8 8″ |
| | 101° 1′-0 1′-9 1/4 |
| | |
| | 10″ 10″ 5 1/4″ 135° 7 3/8″ 1′-6 1/8 |
| | |
| | |
| | 10″ 10″ 135° 135° 7 3/8″ 7 3/8″ 2′-4 3/8 |
| | *** |

## DECK SB

| MARK | SIZE | NUM | LENGTH | TOTAL | DIAGRAM |
|---|---|---|---|---|---|
| S15 | 5 | 4 | 4′-1 1/2 | 16′-6 | |
| S16 | 6 | 10 | 15′-0 | 150′-0 | |
| S17 | 6 | 6 | 7′-4 | 44′-0 | 3′-8 3′-8 |
| S18 | 6 | 2 | 10′-1 | 20′-2 | 5′-0 1′-1 132° 4′-0 |

## APPROACH SLAB #I NB

| MARK | SIZE | NUM | LENGTH | TOTAL | A | B | DIAGRAM |
|---|---|---|---|---|---|---|---|
| AS1 | 5 | 30 | 24′-3 | 727′-6 | | | |
| AS2 | 5 | 16 | 22′-0 | 352′-0 | | | |
| AS3 | 7 | 24 | 22′-0 | 528′-0 | | | |
| AS4 | 7 | 4 ** | 21′-0 1/2 * | 84′-2 | 20′-8 1/8 | 21′-4 3/4 | VARIES A TO B |
| AS5 | 7 | 2 | 21′-1 3/4 * | 42′-3 1/2 | 20′-8 1/8 | 21′-7 3/8 | |
| AS6 | 5 | 2 | 22′-5 7/8 | 44′-11 3/4 | | | |
| AS7 | 4 | 34 | 3′-2 1/8 | 108′-0 1/4 | | | 2′-6 1/8 8″ |
| AS8 | 4 | 34 | 2′-9 1/4 | 94′-2 1/2 | | | 101° 1′-0 1′-9 1/4 |
| AS9 | 5 | 39 | 6′-2 3/4 | 242′-11 1/4 | | | 2′-2 1′-1 135° 1′-3 1′-8 3/4 |
| AS10 | 7 | 3 | 24′-3 | 72′-9 | | | |
| AS11 | 7 | 1 | 22′-0 | 22′-0 | | | |
| CB1 | 6 | 6 | 9′-6 3/4 | 57′-4 1/2 | | | 1′-0 2′-6 1′-0 2′-6 3/8 |
| CB2 | 6 | 2 | 12′-6 | 25′-0 | | | 2′-6 2′-6 |

* AVERAGE LENGTH

** TWO EQUAL SETS

## APPROACH SLAB #I SB

| MARK | SIZE | NUM | LENGTH | TOTAL | A | B | DIAGRAM |
|---|---|---|---|---|---|---|---|
| AS1 | 5 | 32 | 24′-1 3/8 | 771′-8 | | | |
| AS2 | 5 | 16 | 21′-11 7/8 | 351′-10 | | | |
| AS3 | 7 | 24 | 21′-11 7/8 | 527′-9 | | | |
| AS4 | 7 | 4 ** | 23′-1 1/2 * | 92′-6 | 22′-9 1/8 | 23′-5 3/4 | VARIES A TO B |
| AS5 | 7 | 2 | 23′-0 1/8 * | 46′-0 1/4 | 22′-6 1/2 | 23′-5 3/4 | |
| AS6 | NOT USED | | | | | | |

* AVERAGE LENGTH

** TWO EQUAL SETS

| NO. | DATE | BY | REMARKS |
|---|---|---|---|
| | | | |

REVISIONS

UTAH DEPARTMENT OF TRANSPORTATION
SALT LAKE CITY, UTAH
STRUCTURES DIVISION

PARSONS

DESIGN HM 12/04 CHECK MBD 1/05
DRAWN TA 12/04 CHECK MBD 1/05
QUANT. STB 12/04 CHECK MBD 1/05

APPROVAL RECOMM. DATE SENIOR DESIGN ENGR.
APPROVED FOR USE BY UDOT DATE UDOT BRIDGE ENGR.

I-15; CORRIDOR IN UTAH COUNTY
I-15 OVER UPRR AND SR-114 IN LINDON
REINFORCING STEEL SCHEDULE 5

PROJECT NUMBER SP-15-6(52)241

UTAH
COUNTY

C-352W
DRG. NO.

SHT. 52 OF 53

# REINFORCING ST

## APPROACH SLAB #1 SB

| MARK | SIZE | NUM | LENGTH | TOTAL | DIAGRAM |
|---|---|---|---|---|---|
| AS7 | 4 | 36 | 3′-2 1/8 | 114′-4 1/2 | 2′-6 1/8; 8″ |
| AS8 | 4 | 36 | 2′-9 1/4 | 99′-9 | 101°; 1′-0; 1′-9 1/4 |
| AS9 | 5 | 42 | 6′-2 3/4 | 261′-7 1/2 | 2′-2; 1′-1; 135°; 1′-3; 1′-8 3/4 |
| AS10 | 7 | 3 | 24′- 1 3/8 | 72′-4 1/8 | |
| AS11 | 7 | 1 | 22′-0 | 22′-0 | |
| AS12 | 6 | 6 | 7′-4 | 44′-0 | 3′-8; 3′-8 |
| CB1 | 6 | 6 | 9′-6 3/4 | 57′-4 1/2 | 1′-0; 2′-6; 1′-0; 2′-6 3/8 |
| CB2 | 6 | 2 | 12′-6 | 25′-0 | 2′-6; 2′-6 |

## APPROACH SLAB #6 NB

| MARK | SIZE | NUM | LENGTH | TOTAL | A | B |
|---|---|---|---|---|---|---|
| AS1 | 5 | 32 | 24′-1 1/2 | 772′-0 | | |
| AS2 | 5 | 16 | 21′-10 7/8 | 350′-6 | | |
| AS3 | 7 | 24 | 21′-10 7/8 | 525′-9 | | |
| AS4 | 7 | 4 ** | 22′-11 7/8 * | 91′-11 1/2 | 22′-7 1/4 | 23′-4 1/2 |
| AS5 | 7 | 2 | 22′-11 * | 45′-10 | 22′-5 3/8 | 23′-4 1/2 |

VARIES A TO B

* AVERAGE LENGTH

** TWO EQUAL SETS

| MARK | SIZE | NUM | LENGTH | TOTAL | DIAGRAM |
|---|---|---|---|---|---|
| AS6 | NOT USED | | | | |
| AS7 | 4 | 36 | 3′-2 1/8 | 114′-4 1/2 | 2′-6 1/8; 8″ |
| AS8 | 4 | 36 | 2′-9 1/4 | 99′-9 | 101°; 1′-0; 1′-9 1/4 |
| AS9 | 5 | 42 | 6′-2 3/4 | 261′-7 1/2 | 2′-2; 1′-1; 135°; 1′-3; 1′-8 3/4 |
| AS10 | 7 | 3 | 24′-1 1/2 | 72′-4 1/2 | |
| AS11 | 7 | 1 | 21′-10 7/8 | 21′-10 7/8 | |
| AS12 | 6 | 6 | 7′-4 | 44′-0 | 3′-8; 3′-8 |

## APPROACH SLAB #6 SB

| MARK | SIZE | NUM | LENGTH | TOTAL |
|---|---|---|---|---|
| AS1 | 5 | 30 | 23′-11 1/4 | 718′-1 1/2 |
| AS2 | 5 | 16 | 21′-10 7/8 | 350′-6 |
| AS3 | 7 | 24 | 21′-10 7/8 | 525′-9 |
| AS4 | 7 | 4 ** | 20′-11 7/8 * | 83′-11 1/2 |
| AS5 | 7 | 2 | 21′-0 7/8 * | 42′-1 3/4 |
| AS6 | 5 | 2 | 22′-2 1/8 | 44′-4 1/4 |
| AS7 | 4 | 34 | 3′-2 1/8 | 108′-0 1/4 |
| AS8 | 4 | 34 | 2′-9 1/4 | 94′-2 1/2 |
| AS9 | 5 | 39 | 6′-2 3/4 | 242′-11 1/4 |
| AS10 | 7 | 3 | 23′-11 1/4 | 71′-9 3/4 |
| AS11 | 7 | 1 | 21′-10 7/8 | 21′-10 7/8 |

* AVERAGE LENGTH

** TWO EQUAL SETS

## PARAPET NB

| MARK | SIZE | NUM | LENGTH | TOTAL |
|---|---|---|---|---|
| P1 | 4 | 410 | 3′-2 | 1298′-4 |
| P2 | 4 | 410 | 3′-10 5/8 | 1593′-0 1/4 |
| P3 | 4 | 10 | 337′-11 1/4 | 3379′-4 1/2 |
| P4 | 4 | 10 | 20′-5 | 204′-2 |
| P5 | 4 | 10 | 21′-10 7/8 | 219′-0 3/4 |

## PARAPET SB

| MARK | SIZE | NUM | LENGTH | TOTAL |
|---|---|---|---|---|
| P1 | 4 | 410 | 3′-2 | 1298′-4 |
| P2 | 4 | 410 | 3′-10 5/8 | 1593′-0 1/4 |
| P3 | 4 | 10 | 337′-10 7/8 | 3379′-0 3/4 |
| P4 | 4 | 10 | 20′-4 | 203′-4 |
| P5 | 4 | 10 | 22′-0 | 220′-0 |

## ABUTMENT RETROFIT

| MARK | SIZE | NUM | LENGTH | TOTAL |
|---|---|---|---|---|
| RA1 | 8 | 64 | 2′-5 1/2 | 157′-4 |
| RA2 | 5 | 32 | 3′-1 | 98′-8 |

TEEL SCHEDULE

| DIAGRAM | | |
|---|---|---|
| | A | B |
| | 20′-7 1/4 | 21′-4 1/2 |
| | 20′-7 1/4 | 21′-6 3/8 |

VARIES A TO B

2′-6 1/8 — 8″

101° — 1′-0 — 1′-9 1/4

2′-2 — 1′-1 — 135° — 1′-3 — 1′-8 3/4

8″ — 79° — 3′-2 5/8

| | |
|---|---|
| N | N = NUMBER OF SPLICES |
| 5 | |

2′-2 — 327′-1 1/4

8″ — 79° — 3′-2 5/8

| | |
|---|---|
| N | N = NUMBER OF SPLICES |
| 5 | |

2′-2 — 327′-0 7/8

1′-7 — 10 1/2″

5″ — 8″

BENT RETROFIT

| MARK | SIZE | NUM | LENGTH | TOTAL | DIAGRAM |
|---|---|---|---|---|---|
| RB1 | 8 | 320 | 2′-11 1/2 | 946′-8 | 2′-1 — 10 1/2″ |
| RB2 | 5 | 240 | 2′-7 | 620′-0 | 6″ — 4″ |

## REBAR TOTAL

| LENGTH | BAR SIZE | WEIGHT (LBS/FT) | TOTAL WEIGHT |
|---|---|---|---|
| 18,265′-0 | #4 | 0.668 | 12,201.0 LBS |
| 111,412′-8 3/8 | #5 | 1.043 | 116,203.4 LBS |
| 3,845′-11 | #6 | 1.502 | 5,776.6 LBS |
| 4,415′-8 7/8 | #7 | 2.044 | 9,025.8 LBS |
| 2,182′-10 1/2 | #8 | 2.670 | 5,828.3 LBS |
| 5,558′-8 | #9 | 3.400 | 18,899.5 LBS |
| 1,130′-8 | #10 | 4.303 | 4,865.3 LBS |
| 4,782′-5 | #11 | 5.313 | 25,409.0 LBS |
| | | TOTAL | 198,208.9 LBS |

REVISIONS

| NO. | DATE | BY | REMARKS |
|---|---|---|---|
| | | | |

UTAH DEPARTMENT OF TRANSPORTATION
SALT LAKE CITY, UTAH
STRUCTURES DIVISION

PARSONS

DESIGN HM 12/04 CHECK MBD 1/05
DRAWN TA 12/04 CHECK MBD 1/05
QUANT. STB 12/04 CHECK MBD 1/05

APPROVAL RECOMM. DATE SENIOR DESIGN ENGR.
APPROVED FOR USE BY UDOT DATE UDOT BRIDGE ENGR.

I-15; CORRIDOR IN UTAH COUNTY
I-15 OVER UPRR AND SR-114 IN LINDON
REINFORCING STEEL SCHEDULE 6

PROJECT NUMBER SP-15-6(52)241

UTAH
COUNTY

C-352W
DRG. NO.

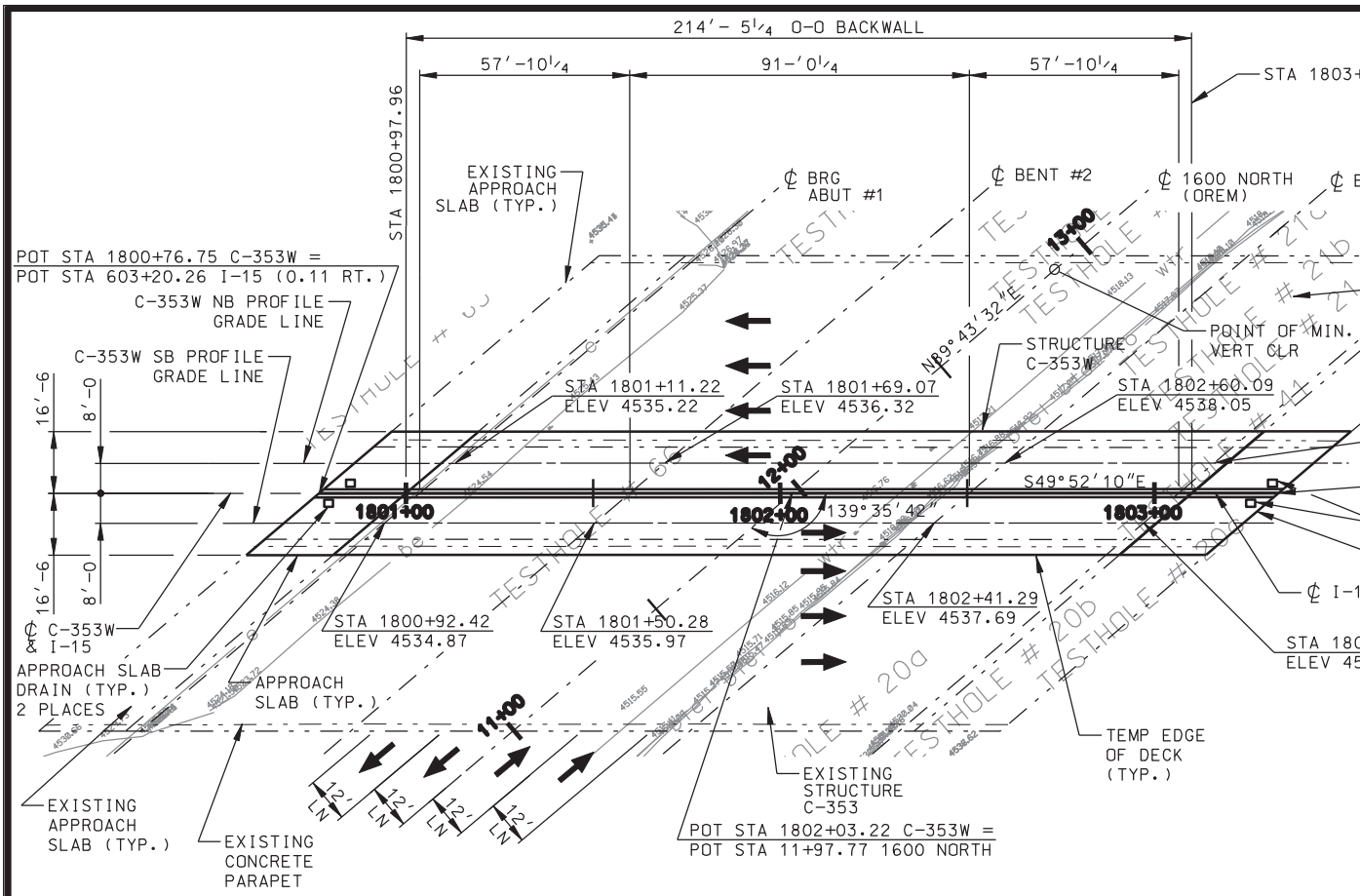


## PLAN

NOTES: 1. ALL BENTS AND ABUTMENTS ARE PARALLEL TO BEARING N89°43'32"E.

2. SEE FOUNDATION PLAN FOR DISPOSITION AND LOCATION OF UTILITIES.

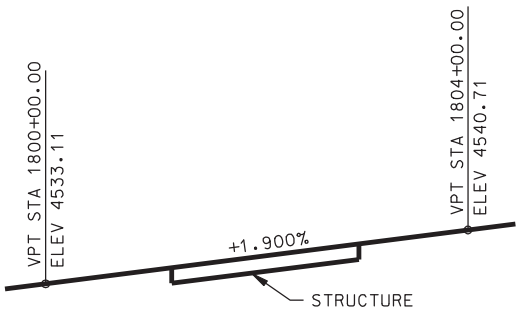


## I-15 PROFILE NB & SB

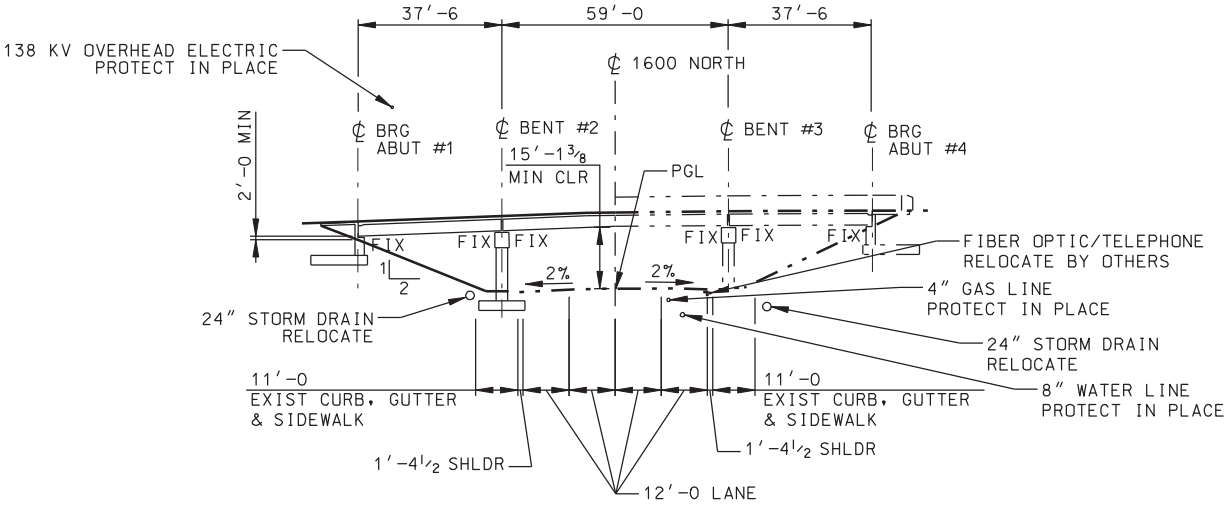


## ELEVATION

NORMAL TO 1600 NORTH

DGN File: IP_PWPcdms1717\4433_C-353_01_SL01.dgn

02-MAY-2005

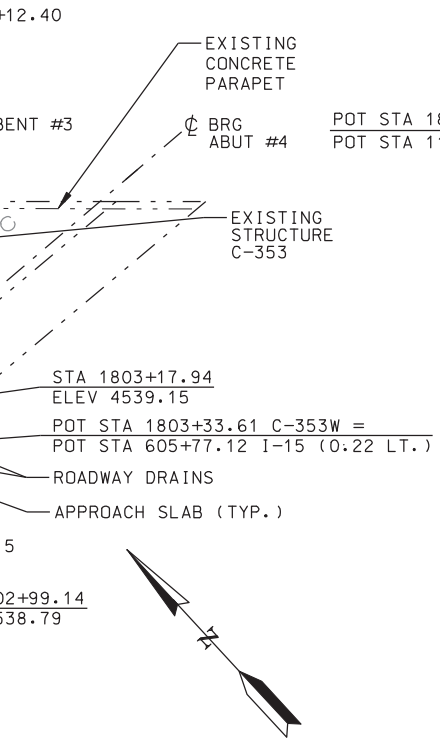


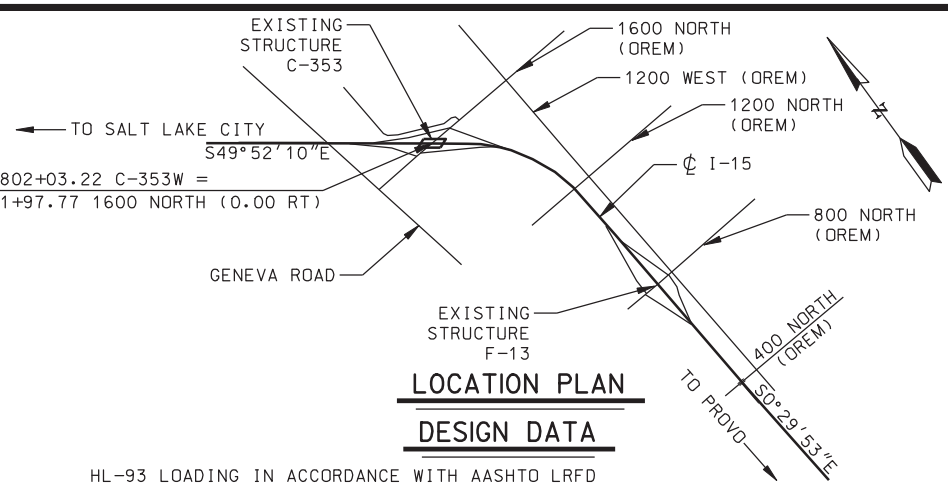


## LOCATION PLAN

## DESIGN DATA

HL-93 LOADING IN ACCORDANCE WITH AASHTO LRFD BRIDGE DESIGN SPECIFICATIONS 3rd EDITION, 2004.

INVENTORY AND OPERATING RATINGS FOR HS20-44 ARE IN ACCORDANCE WITH THE AASHTO MANUAL FOR CONDITION ELEVATION OF BRIDGES, 2nd EDITION, AND THE 2001 AND 2003 INTERIM SPECIFICATIONS LOAD FACTOR METHOD. INVENTORY AND OPERATING RATINGS FOR HL-93 ARE IN ACCORDANCE WITH THE GUIDE MANUAL FOR CONDITION EVALUATION AND LOAD RESISTANCE FACTOR RATING (LRFR) OF HIGHWAY BRIDGES.

| | | OPERATING RATING | INVENTORY RATING |
|---|---|---|---|
| EXISTING GIRDERS | (HS-20) | 1.21 | 0.72 |
| | (HL-93) | 0.98 | 0.76 |
| NEW GIRDERS | (HL-93) | 1.82 | 1.40 |

CAST-IN-PLACE CONCRETE: f'c = 4000 PSI; fy (REINF) = 60 KSI
STRUCTURAL STEEL: fy = 36 KSI MIN
WEARING SURFACE: 3" ASPHALT, 35 PSF, 0 PSF FWS
DESIGN SPEED: I-15 = 70 M.P.H.; 1600 NORTH = 40 M.P.H.
SEISMIC: SEISMIC DESIGN PARAMETERS
SEISMIC DESIGN PER NCHRP 12-49
(500 YR RETURN PERIOD. 10% PE IN 50 YR)
Ss = MAX CONSIDERED EQ GROUND MOTION
AT 0.2s = 0.44g
S1 = MAX CONSIDERED EQ GROUND MOTION
AT 1.0s = 0.15g
SITE CLASS D

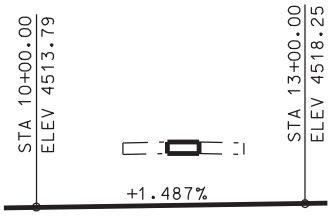


## 1600 NORTH PROFILE (EXIST)

## GENERAL NOTES

1. USE COATED DEFORMED BILLET-STEEL BARS CONFORMING TO AASHTO M 284 OR M 111 AND M 31 GRADE 60 FOR ALL REINFORCING STEEL.
2. CONFORM ALL STRUCTURAL STEEL TO AASHTO M 270 GRADE 50, EXCEPT WHERE NOTED OTHERWISE.
3. CHAMFER ALL EXPOSED CONCRETE CORNERS 3/4" EXCEPT WHERE NOTED OTHERWISE.
4. PROVIDE 2" CONCRETE COVER TO REINFORCING STEEL EXCEPT WHERE NOTED OTHERWISE.
5. USE CLASS AA (AE) FOR CAST-IN-PLACE CONCRETE EXCEPT WHERE SPECIFIED OTHERWISE.
6. ALL NEW SUBSTRUCTURE ELEMENTS ARE DESIGNED TO MATCH LOCATION AND DIRECTION OF EXISTING ELEMENTS. FIELD VERIFY ALL CONTROLLING DIMENSIONS PRIOR TO CONSTRUCTION AND FABRICATION OF ANY MATERIALS. REPORT ANY DISCREPANCY BETWEEN THESE PLANS AND THE EXISTING STRUCTURE TO THE ENGINEER. DO NOT CONSTRUCT OR FABRICATE ANY ELEMENTS UNTIL THE DISCREPANCIES ARE RESOLVED. ALL STRUCTURE GEOMETRY IS BASED ON LOCAL SURVEY CONTROL POINTS SHOWN ON THE FOUNDATION PLAN. THE I-15 STATIONING AND ALIGNMENT IS FOR INFORMATION ONLY. ABUTMENT/PIER DIRECTIONS AND LOCATIONS USED IN DESIGN ARE LISTED.
7. SEE EXISTING STRUCTURE C-353 PLANS FOR ADDITIONAL INFORMATION.
8. DO NOT SCALE DRAWINGS.
9. HORIZONTAL DIMENSIONS ARE PLAN. VERTICAL DIMENSIONS ARE PLUMB.
10. ALL DECK, APPROACH SLAB AND PROFILE GRADE ELEVATIONS ARE AT TOP OF CONCRETE.
11. CENTERLINE C-353W IS OBTAINED BY CREATING A LINE CONNECTING TWO POINTS EACH LOCATED ALONG THE CENTERLINE BEARING ABUTMENT #1 AND #4 RESPECTIVIELY THAT ARE EQUIDISTANT FROM THE CENTERLINE OF THE SBL AND NBL INTERIOR OF MOST BEAMS.
12. CONTRACTOR WILL VERIFY RELATIVE ELEVATION DIFFERENCES BETWEEN C-353 AND C-353W AT BOTTOM OF NBL AND SBL INTERIOR MOST EXISTING BEAMS AT FRONT FACE OF ABUTMENT #1, SEE "ABUTMENT #1 DETAILS" SHEET. IF THE RELATIVE ELEVATION DIFFERENCES VARY BY MORE THAN ± 1", CONTRACTOR WILL ADJUST ALL PLAN ELEVATIONS ACCORDINGLY AND SUBMIT TO THE ENGINEER FOR APPROVAL BEFORE MAKING ANY ADJUSTMENTS IN THE FIELD. FOR ELEVATIONS SEE SHEET 17.

## INDEX OF SHEETS


1. SITUATION & LAYOUT 1
2. SITUATION & LAYOUT 2
3. SOIL DATA SHEET
4. FOUNDATION PLAN
5. ABUTMENT PLAN & ELEVATION
6. ABUTMENT DETAILS
7. BENT PLAN & ELEVATION
8. BENT DETAILS
9. BENT FOOTING DETAILS
10. FRAMING PLAN
11. GIRDER DETAILS 1
12. GIRDER DETAILS 2
13. DIAPHRAGM DETAILS 1
14. DIAPHRAGM DETAILS 2
15. BEARING DETAILS
16. DECK SLAB PLAN
17. DECK SECTIONS
18. SCREED ELEVATIONS
19. APPROACH SLAB PLAN
20. APPROACH SLAB DRAIN DETAILS
21. PARAPET DETAILS
22. PARAPET END DETAILS
23. CONCRETE SLOPE PROTECTION
24. REINFORCING STEEL SCHEDULE 1
25. REINFORCING STEEL SCHEDULE 2


## QUANTITIES

| ITEM | EST | UNIT | AS CONSTR |
|---|---|---|---|
| STRUCTURAL FILL BENEATH FOUNDATIONS | 345 | CU YD | |
| GRANULAR BACKFILL BORROW (PLAN QUANTITY) | 145 | CU YD | |
| REINFORCING STEEL - COATED | 114,650 | LB | |
| STRUCTURAL CONCRETE (EST. LUMP QTY 560 C.Y.) | 1 | LUMP | |
| PREPARE BRIDGE FOR WIDENING | 1 | LUMP | |
| STRUCTURAL STEEL (EST. LUMP QTY 201,640 LBS) | 1 | LUMP | |
| REPLACE CONCRETE SLOPE PROTECTION | 685 | SQ YD | |

| NO. | DATE | BY | REMARKS |
|---|---|---|---|
| | | | |

REVISIONS

UTAH DEPARTMENT OF TRANSPORTATION
SALT LAKE CITY, UTAH
STRUCTURES DIVISION
HORROCKS ENGINEERS

DESIGN LRR 09/04 CHECK MAD 09/04
DRAWN DKJ 09/04 CHECK LRR 09/04
QUANT. RSH 01/05 CHECK NBD 01/05

APPROVAL RECOMM. DATE SENIOR DESIGN ENGR.
APPROVED FOR USE BY UDOT DATE UDOT BRIDGE ENGR.

I-15; CORRIDOR IN UTAH COUNTY
I-15 1600 NORTH OVERPASS IN OREM
SITUATION & LAYOUT 1

PROJECT NUMBER SP-15-6(52)241

UTAH
COUNTY

C-353W
DRG. NO.

SHT. 1 OF 25

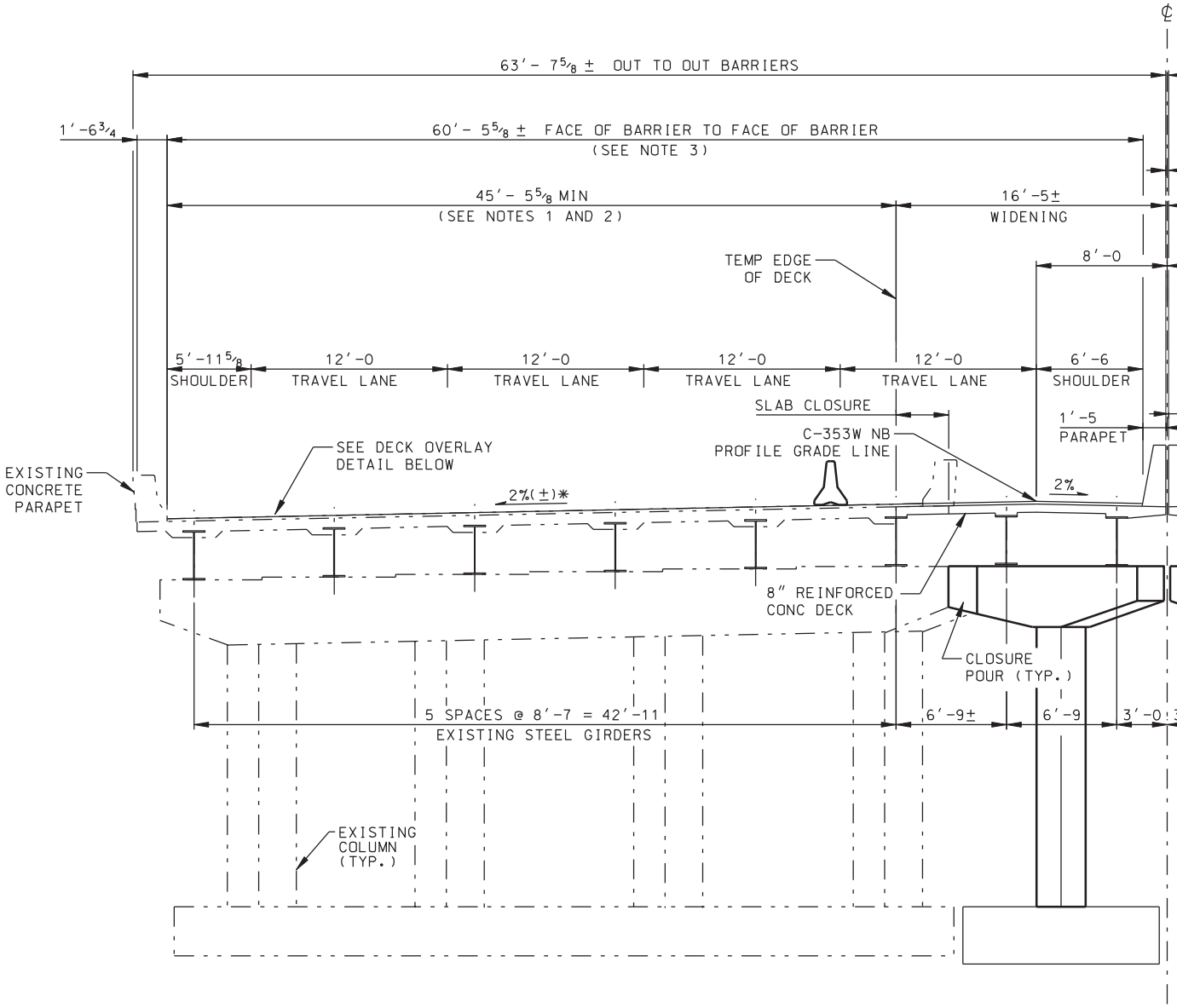


## SECTION THRU

* MATCH EXISTING

## NOTES

1. PARTIALLY REMOVE EXISTING ASPHALT SURFACING OVERLAY. SEE M-91 SHEETS FOR TRANSITION AND REHABILITATION DETAILS.
2. LIMITS OF EXISTING CONCRETE DECK FOR STRUCTURAL POTHOLE PATCHING.
3. APPLY WATERPROOFING MEMBRANE, PLACE 1″ OPEN GRADED SURFACE COURSE AND 2″ HMA – ½ INCH – TOTAL THICKNESS= 3″. SEE DECK OVERLAY DETAIL.
4. PROFILE GRADE LINE IS TAKEN AT TOP OF NEW CONCRETE DECK.

DGN File:IP_PWPdnns1717\4433.C-353.02_SL02.dgn
02-MAY-2005

C-353W CONTROL LINE AND HORIZONTAL CONTROL LINE

63′- 7⅝ ± OUT TO OUT BARRIERS

60′- 5⅝ ± FACE OF BARRIER TO FACE OF BARRIER (SEE NOTE 3)

1′-6¾

2″ OPEN JOINT

16′-5± WIDENING

45′- 5⅝ MIN (SEE NOTES 1 AND 2)

TEMP EDGE OF DECK

8′-0

C-353W SB PROFILE GRADE LINE

6′-6 SHOULDER | 12′-0 TRAVEL LANE | 12′-0 TRAVEL LANE | 12′-0 TRAVEL LANE | 12′-0 TRAVEL LANE | 5′-11⅝ SHOULDER

1′-5 PARAPET

SLAB CLOSURE

3′-0 (TYP.)

EXISTING CONC PARAPET AND CANTILEVER SLAB TO BE REMOVED. SAVE AND CLEAN ALL TRANSVERSE REBAR (TYP.)

EXISTING CONCRETE PARAPET

TEMPORARY BARRIER (TYP.)

2%

2%(±)*

STEEL GIRDER (TYP.)

4′-0½ MAX STRUCTURE DEPTH

3′-0 | 6′-9 | 6′-9± | 5 SPACES @ 8′-7 = 42′-11 EXISTING STEEL GIRDERS

FINISH GROUND

3′-0 x 3′-0 SQUARE COLUMN (TYP.)

STRUCTURE

CROSS SLOPE

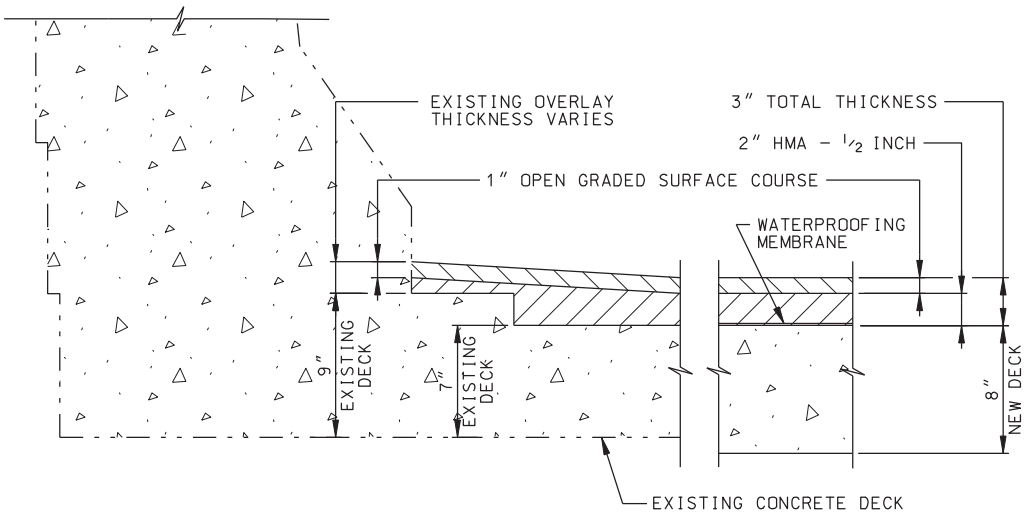


DECK OVERLAY DETAIL

| NO. | DATE | BY | REMARKS |
|---|---|---|---|

REVISIONS

UTAH DEPARTMENT OF TRANSPORTATION
SALT LAKE CITY, UTAH
STRUCTURES DIVISION

HORROCKS ENGINEERS

CHECK MAD 09/04 | CHECK LRR 09/04 | CHECK NBD 01/05

DESIGN LRR 09/04 | DRAWN DKJ 09/04 | QUANT. RSH 01/05

APPROVAL RECOMM. DATE SENIOR DESIGN ENGR.

APPROVED FOR USE BY UDOT DATE UDOT BRIDGE ENGR.

I-15: CORRIDOR IN UTAH COUNTY

I-15 1600 NORTH OVERPASS IN OREM

SITUATION & LAYOUT 2

PROJECT NUMBER SP-15-6(52)241

UTAH COUNTY

C-353W DRG. NO.

SHT. 2 OF 25

# DRILL HOLE LOG

## BORING NO. 04-1

Sheet: 1 of 1

PROJECT: I-15, CORRIDOR IN UTAH COUNTY - STRUCTURE C353 PROJECT NO.: 200401.045
CLIENT: UTAH DEPARTMENT OF TRANSPORTATION DATE: 8/11/04
LOCATION: SEE SITE PLAN: N 91564, E 210391 ELEVATION: 4517.3'
DRILLER: D. SAMPSON, A. HARTVIGSEN LOGGED BY: M.H., V.N.B.
EQUIP./DRILL METHOD: CME-55 / N.W. CASING
DEPTH TO WATER - INITIAL: ▽ 2.0' AFTER 24 HOURS: ▽ 2.5' 8/25/04

| Elev. (Feet) | Depth (Feet) | Lithology | Sample Type | Rec. (In.) | Blows Per 6" & Torvane (tsf) | USCS (AASHTO) | Material Description | Dry Density, pcf | Moisture Content, % | Atter. Liquid Limit, % | Atter. Plasticity Index, % | Gradation Gravel, % | Gradation Sand, % | Gradation Silt/Clay, % | Other Tests |
|---|---|---|---|---|---|---|---|---|---|---|---|---|---|---|---|
| | | | | | | | 2" CONCRETE / 6" GRAVEL W/SAND | | | | | | | | |
| 4515 | | | | 12 | 7,9,7 | SM | brown, dry, med. dense — SILTY SAND W/SOME GRAVEL | | | | | | | | |
| | 5 | | | 12 | 4,5,9 | CL (A-7-5(14)) | lt. brown, moist, stiff, 3" silty sand layer — LEAN CLAY W/SILTY SAND LENSES & LAYERS | | 30.3 | 45 | 20 | 0 | 2 | 98 | |
| 4510 | | | | 17 | Pushed 0.45 | ML (A-4(8)) | lt. brown, moist to wet, firm — SILT | 99.9 | 25.4 | 28 | 5 | 0 | 8 | 92 | CT UC |
| | 10 | | | 13 | 3,6,7 0.40 | CL (A-6(8)) | lt. brown, moist to wet, firm, 3" silty sand layer — LEAN CLAY | | 21.7 | 32 | 11 | 0 | 9 | 91 | |
| 4505 | | | | 10 | Pushed | SM | brown, moist to wet, med. dense | | | | | | | | |
| | | | | 16 | 4,8,11 | SM | brown-gray, wet, med. dense — SILTY SAND | | | | | | | | |
| | 15 | | | 18 | 7,13,15 | SP-SM (A-3) | brown, wet, med. dense — SAND W/SILT | | 23.4 | | NP | 0 | 94 | 6 | |
| 4500 | | | | | | | | | | | | | | | |
| | 20 | | | 18 | 9,14,13 | SP-SM | brown, wet, med. dense | | | | | | | | |
| 4495 | | | | | | SM | brown-gray, wet, med. dense | | | | | | | | |
| | 25 | | | 18 | 8,14,17 | SP-SM (A-3) | brown-gray, wet, dense — INTERBEDDED SILTY SAND W/SAND, SILT LAYERS | | 24.0 | | NP | 0 | 93 | 7 | |
| 4490 | | | | | | | | | | | | | | | |
| | 30 | | | 8 | 9,14,21 | SM | brown-gray, wet, dense | | | | | | | | |

# DRILL HOLE LOG

## BORING NO. 04-3

Sheet: 1 of 1

PROJECT: I-15, CORRIDOR IN UTAH COUNTY - STRUCTURE C353 PROJECT NO.: 200401.045
CLIENT: UTAH DEPARTMENT OF TRANSPORTATION DATE: 8/13/04
LOCATION: SEE SITE PLAN: N 91511, E 210438 ELEVATION: 4539.4'
DRILLER: B. HARTLEY, A. HARTVIGSEN LOGGED BY: M.H., V.N.B.
EQUIP./DRILL METHOD: CME-55 / N.W. CASING
DEPTH TO WATER - INITIAL: ▽ 19.0' AFTER 24 HOURS: ▽ 21.8' 8/25/04

| Elev. (Feet) | Depth (Feet) | Lithology | Sample Type | Rec. (In.) | Blows Per 6" & Torvane (tsf) | USCS (AASHTO) | Material Description | Dry Density, pcf | Moisture Content, % | Atter. Liquid Limit, % | Atter. Plasticity Index, % | Gradation Gravel, % | Gradation Sand, % | Gradation Silt/Clay, % | Other Tests |
|---|---|---|---|---|---|---|---|---|---|---|---|---|---|---|---|
| | | | | 18 | 6,9,12 | SM | lt. brown, very dry, med. dense — SILTY FINE SAND W/SOME GRAVEL | | | | | | | | |
| 4535 | 5 | | | 18 | 6,7,5 | SM (A-2-4) | lt. brown, slightly moist, med. dense — SILTY SAND | | 7.9 | | NP | 0 | 74 | 26 | |
| 4530 | 10 | | | 9 | Pushed | SM | some organics & wood | | | | | | | | |
| | | | | 13 | 9,11,13 | SM | brown, slightly moist, med. dense | | | | | | | | |
| 4525 | 15 | | | 9 | 6,10,12 | SM (A-3) | brown, slightly moist, med. dense — SILTY SAND (fill) | | 11.7 | | NP | 0 | 87 | 13 | |
| | | | | 11 | 4,9,13 | SM | lt. brown, slightly moist, med. dense | | | | | | | | |
| 4520 | 20 | | | 9 | Pushed | - | lt. brown, slightly moist | | | | | | | | |
| | | | | 12 | 8,8,6 | ML (A-4(5)) | lt. brown, slightly moist, stiff — INTERBEDDED SILTY SAND W/SILT & CLAYEY SILT LENSES | | 21.2 | | NP | 0 | 41 | 59 | |
| | | | | 11 | Pushed 0.32 | - | | | | | | | | | |
| 4515 | 25 | | | - | Pushed | - | lt. brown, wet, soft | | | | | | | | |
| | | | | 12 | 1,4,4 0.35 | SM | brown, wet, loose — SILTY SAND | | | | | | | | |
| | | | | | 3,4,4 0.68 0.74 | CL | brown, wet, firm | | | | | | | | |
| 4510 | 30 | | | - | | CL | lt. brown, moist, firm to stiff — LEAN CLAY W/RUSTY SILTY SAND LENSES | | | | | | | | |
| | | | | - | 3,4,6 0.71 | CL | lt. brown, moist, stiff | | | | | | | | |

# DRILL HOLE

## BORING NO.

Sheet: 1 of 1

| Elev. (Feet) | Depth (Feet) |
|---|---|
| 4515 | |
| | 5 |
| 4510 | |
| | 10 |
| 4505 | |
| | 15 |
| 4500 | |
| | 20 |
| 4495 | |
| | 25 |
| 4490 | |
| | 30 |
| 4485 | |
| | 35 |
| 4480 | |
| | 40 |
| 4475 | |

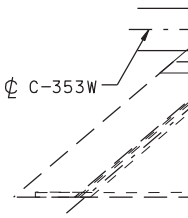


DGN File: IP_PWPdns1717\4433.C-353.03_SOIL.dgn

02-MAY-2005

# LOG

04–2

PROJECT: I-15, CORRIDOR IN UTAH COUNTY - STRUCTURE C353 PROJECT NO.: 200401.045
CLIENT: UTAH DEPARTMENT OF TRANSPORTATION DATE: 8/11/04
LOCATION: SEE SITE PLAN: N 91625, E 210292 ELEVATION: 4515.9'
DRILLER: D. SAMPSON, A. HARTVIGSEN LOGGED BY: M.H., V.N.B.
EQUIP./DRILL METHOD: CME-55 / N.W. CASING
DEPTH TO WATER - INITIAL: ~7.0' AFTER 24 HOURS: 1.7' 8/25/04

| SAMPLE Type | Rec. (in.) | Blows Per 6" & Torvane (tsf) | USCS (AASHTO) | Material Description | | Dry Density, pcf | Moisture Content, % | Atter. Liquid Limit, % | Atter. Plasticity Index, % | Gradation Gravel, % | Gradation Sand, % | Gradation Silt/Clay, % | Other Tests |
|---|---|---|---|---|---|---|---|---|---|---|---|---|---|
| | | | | gray-brown, moist, loose | 3.5" CONCRETE<br>POORLY GRADED GRAVEL W/SILT & SAND (fill) | | | | | | | | |
| | 6 | 5,2,2 | GP-GM<br>CL | | | | | | | | | | |
| | 18 | 6,5,5<br>0.78 | CL<br>(A-6(12)) | lt. brown, moist, stiff | SANDY LEAN CLAY W/SILTY SAND LENSES | | 22.8 | 40 | 20 | 0 | 12 | 88 | |
| | 8 | Pushed<br>0.50 | CL<br>(A-6(8)) | lt. brown, moist, firm | | 98.2 | 31.4 | 36 | 15 | 0 | 13 | 87 | CT |
| | 6 | 5,3,10 | SM | lt. brown & rusty, wet, med. dense | SILTY FINE TO MED. SAND | | | | | | | | |
| | 12 | 5,10,10 | SM<br>(A-4(3)) | lt. brown & rusty, wet, med. dense, soft | INTERBEDDED SILTY SAND & SANDY SILT | | 21.5 | | NP | 0 | 51 | 49 | |
| | 16 | 7,10,10 | SM<br>(A-3) | rusty-brown, wet, med. dense | SILTY SAND | | 19.6 | | NP | 0 | 81 | 19 | DS |
| | 18 | 4,5,12<br>0.28 | SM<br>ML<br>SM | brown<br>lt. brown<br>brown, wet, med. dense | SANDY SILT | | | | | | | | |
| | 18 | 5,12,14 | SM<br>(A-3) | brown, wet, med. dense, 1.5" silt layer | SILTY SAND | | 22.7 | | NP | 0 | 84 | 16 | |
| | 18 | 9,18,20 | SP-SM | gray-brown, wet, dense | SAND W/SILT | | | | | | | | |
| | 18 | 4,6,8<br>0.70 | CL<br>(A-4(8)) | dk. gray, moist, stiff | LEAN CLAY TO SILTY CLAY | | 24.4 | 30 | 8 | 0 | 16 | 84 | |
| | 18 | 6,11,10<br>0.38 | ML/SM | dk. gray, moist to wet, firm/med. dense | SAND<br>SANDY SILT TO SILTY SAND | | | | | | | | |
| | 16 | 8,8,13<br>0.52 | ML | dk. gray, moist to wet, firm to stiff | SANDY SILT | | | | | | | | |

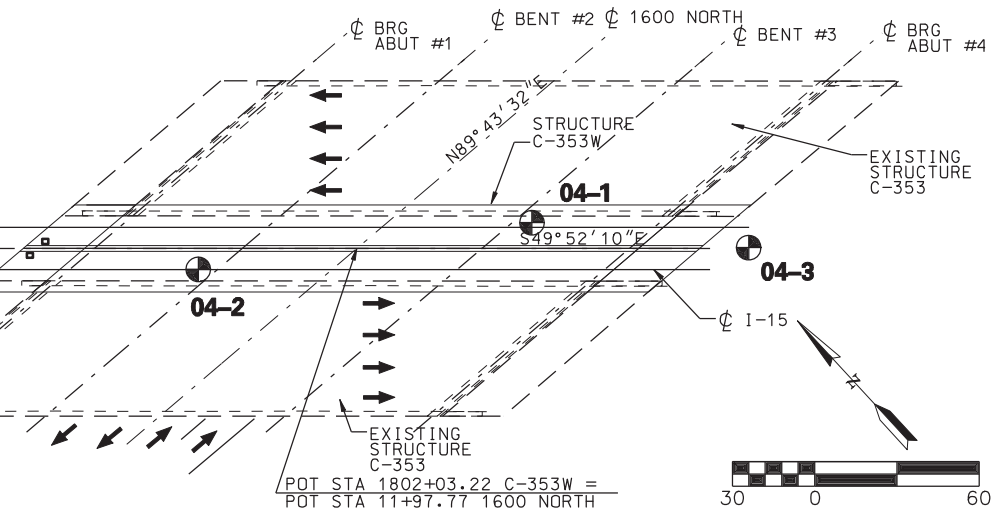


## LOCATION PLAN

# KEY TO BORING LOG

## SYMBOLS

2,3,2 ← Blow Count per 6"
0.45 ← Torvane (tsf)
Disturbed Sample
Undisturbed Sample
Groundwater Elevation

UC = Unconfined Compression Test
CT = Consolidation Test
SG = Specific Gravity Test
DS = Direct Shear Test

## RELATIVE DENSITY (NON-PLASTIC - SAND & SILT)

VERY LOOSE N<4
LOOSE N 4-10
MED DENSE N 10-30
DENSE N 30-50
VERY DENSE N>50

## CONSISTENCY (PLASTIC - SILT & CLAY)

VERY SOFT N<2
SOFT N 2-4
MEDIUM STIFF N 4-8
STIFF N 8-15
VERY STIFF N 15-30
HARD N>30

## GENERAL NOTES

1. THE SUBSURFACE EXPLORATIONS SHOWN WERE CONDUCTED BETWEEN 08-11-04 AND 08-13-04 BY RB&G ENGINEERING, INC..
2. THESE BORING LOGS REPRESENT A SYNOPSIS OF THE SOIL DEPOSITS ENCOUNTERED WITHIN EACH BORING AND ARE BASED ON SOUND GEOLOGICAL AND ENGINEERING JUDGMENT. BECAUSE SOIL IS A COMPLEX MEDIUM, THESE BORING LOGS MAY OR MAY NOT REPRESENT THE SOIL CONDITIONS AT THIS SITE. THIS SUBSURFACE INTERPRETATION IS PRESENTED IN GOOD FAITH AND IS NOT INTENDED AS A SUBSTITUTE FOR PERSONAL INVESTIGATION AND JUDGEMENT OF THE CONTRACTOR.
3. THE WATER LEVELS AND CONDITIONS INDICATED ON THE BORING LOGS REPRESENT HOLE CONDITIONS ON THE DATE SHOWN, HOWEVER, IT SHOULD BE NOTED, THAT AT LOCATIONS AWAY FROM THE BORINGS OR AT ANOTHER TIME THE WATER LEVELS AND CONDITIONS MAY VARY SIGNIFICANTLY.
4. THE STRATIFICATION LINES REPRESENT THE APPROXIMATE BOUNDARIES BETWEEN SOIL TYPES AND THE TRANSITION MAY BE GRADUAL.
5. COBBLE - A ROCK WITH AN AVERAGE DIMENSION BETWEEN 3 INCHES AND 12 INCHES
6. BOULDER - A ROCK WITH AN AVERAGE DIMENSION OF 12 INCHES OR GREATER

NOTE: DRILL RIG USED - CME 55
HAMMER E=0.75

GEOTECHNICAL ENGINEER

| NO. | DATE | BY | REMARKS |
|---|---|---|---|
| | | | |

REVISIONS

UTAH DEPARTMENT OF TRANSPORTATION
SALT LAKE CITY, UTAH
STRUCTURES DIVISION
RB&G ENGINEERING INC.

DESIGN BEP 10/04 CHECK
DRAWN JPN 10/04 CHECK
QUANT. CHECK

APPROVAL RECOMM. DATE SENIOR DESIGN ENGR.
APPROVED FOR USE BY UDOT DATE UDOT BRIDGE ENGR.

I-15; CORRIDOR IN UTAH COUNTY
I-15 1600 NORTH OVERPASS IN OREM
SOIL DATA SHEET
PROJECT NUMBER SP-15-6(52)241

UTAH
COUNTY
C-353W
DRG. NO.

SHT. 3 OF 25

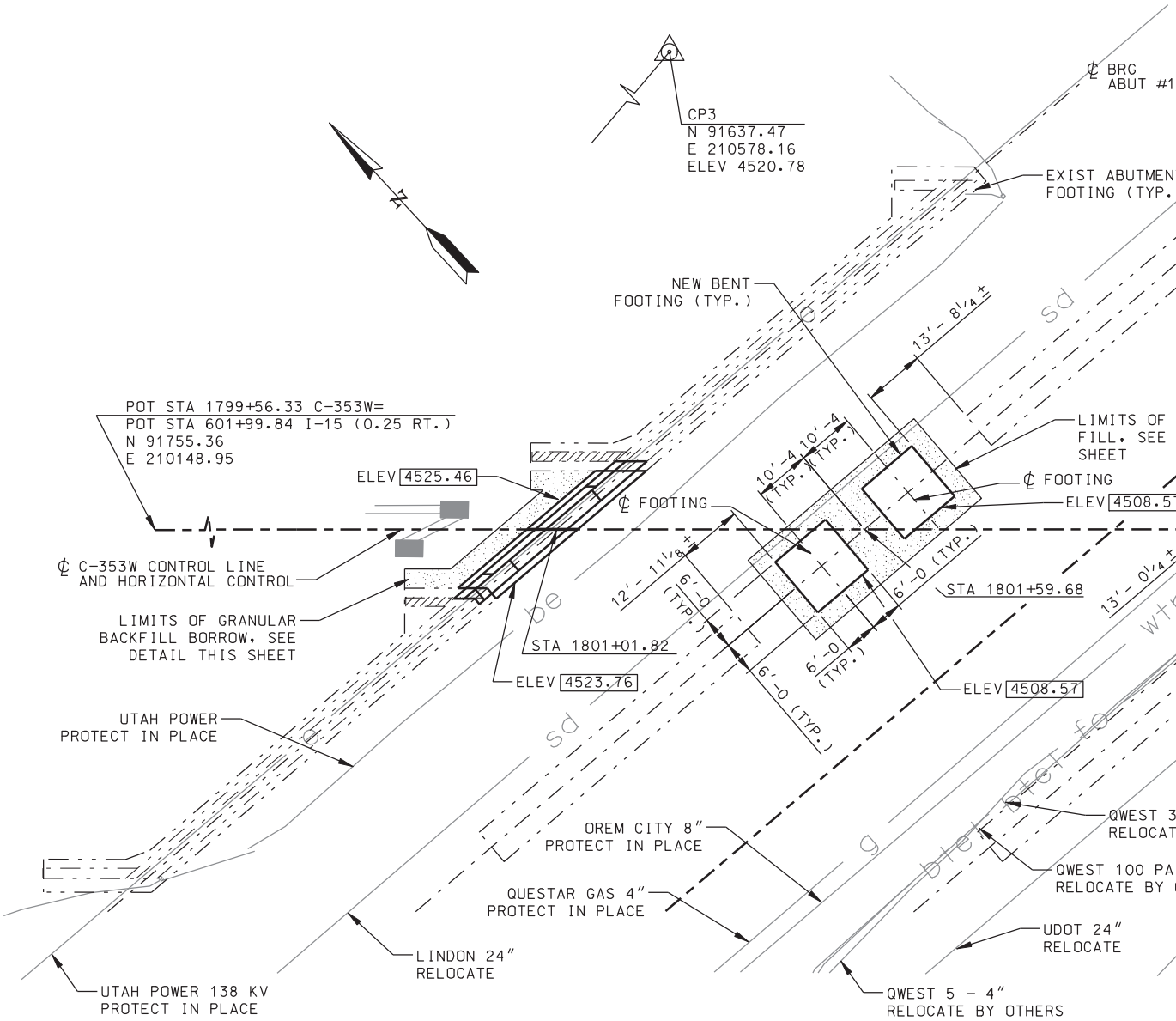


## FOUNDATION PLAN

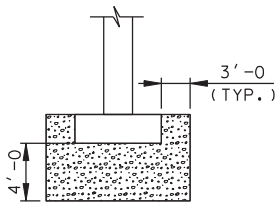


## EST. LIMITS OF STRUCTURAL FILL AT BENT

(EACH DIRECTION)

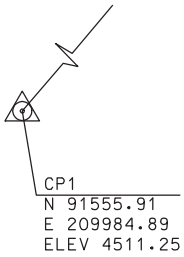


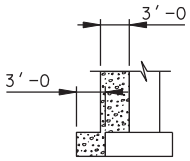


## LIMITS OF GRANULAR BACKFILL BORROW AT ABUTMENT

| QUANTITIES<br>GRANULAR BACKFILL BORROW | |
|---|---|
| ABUTMENTS | 145 CY |
| **QUANTITIES**<br>**STRUCTURAL FILL** | |
| BENTS | 345 CY |

DGN File: IP_PWPcdms1717\4433_C-353_04_FOUN01.dgn

02-MAY-2005

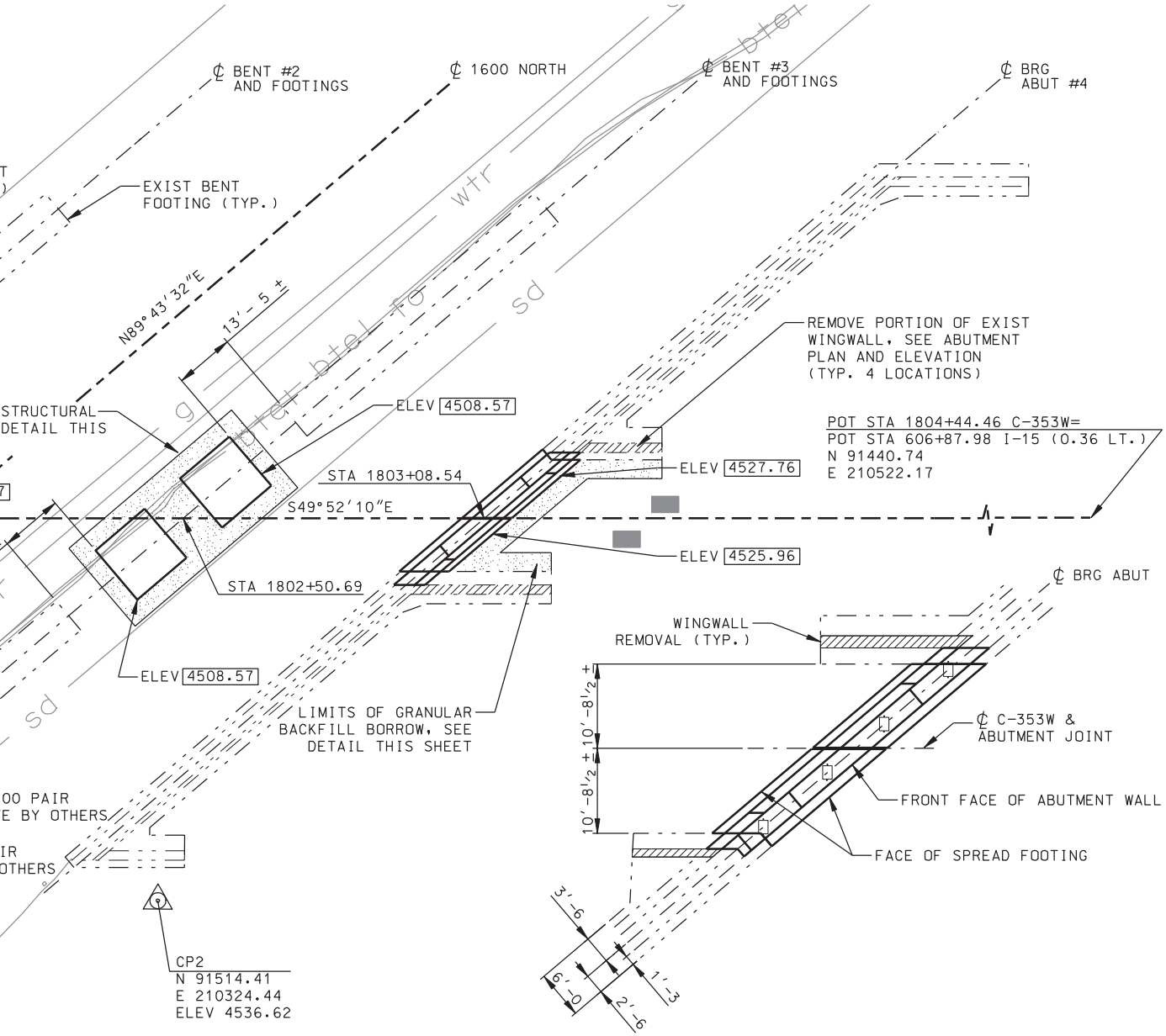


## FOOTING LAYOUT FOR ABUTMENT #1

ABUTMENT #4 SIMILAR

## NOTES

1. ELEVATIONS AT THE BOTTOM OF FOOTING ARE SHOWN ENCLOSED IN RECTANGLES E.G. 4508.57 .
2. LOCATE ℄ NEW COLUMNS AS AN EXTENSION OF THE BEARING ALONG ℄ EXISTING COLUMNS.
3. ALIGN FRONT FACE OF ABUTMENT WALL WITH FRONT FACE OF EXISTING ABUTMENT WALL.
4. GRANULAR BACKFILL BORROW HEIGHT IS COMPUTED FROM THE BOTTOM OF THE ABUTMENT TO THE BOTTOM OF THE APPROACH SLAB.
5. PROVIDE SOIL COVER OF MINIMUM 2'-0 FOR ALL FOOTINGS.
6. FIELD VERIFY NORTHING AND EASTING OF ALL CONTROL POINTS AS WELL AS THE RELATIVE ELEVATION DIFFERENCES BETWEEN ALL CONTROL POINTS. IF THE NORTHING, EASTING OR RELATIVE ELEVATION DIFFERENCES VARY BY MORE THAN ± 1" FROM WHAT IS GIVEN ON THIS SHEET, REPORT DISCREPANCIES TO THE ENGINEER AND STOP ALL CONSTRUCTION UNTIL DISCREPANCIES ARE RESOLVED.
7. BOTTOM OF FOOTING ELEVATIONS SHOWN AT ABUTMENTS ARE SHOWN AS REFERENCE. MATCH BOTTOM OF NEW ABUTMENT FOOTING WITH EXISTING.
8. USE BRACED EXCAVATION OR WALL SYSTEM ADJACENT TO EXISTING BENTS WHERE SLOPES STEEPER THAN 1H:1V ARE NECESSARY. DO NOT USE BRACING OR WALLS THAT REQUIRE DRIVING, VIBRATION, OR OTHER ACTIONS THAT MAY DISTURB OR UNDERMINE EXISTING FOOTINGS.
9. PROVIDE BRACED EXCAVATION AT TOE OF ABUTMENT FILL AS NECESSARY DURING CONSTRUCTION.
10. FINAL DEPTH OF EXCAVATION BENEATH SPREAD FOOTINGS TO BE INSPECTED AND APPROVED BY ENGINEER TO ENSURE THAT LESS COMPETENT SOILS ARE COMPLETELY REMOVED. MINIMUM EXCAVATION WIDTH EQUAL TO FOOTING WIDTH PLUS OVEREXCAVATION DEPTH PLUS 2 FEET. REPLACE OVEREXCAVATED MATERIAL WITH STRUCTURAL FILL TO FOOTING LEVEL IN ACCORDANCE WITH SPECIAL PROVISION 02742S.
11. FOR SPREAD FOOTINGS PLACED ON EXISTING SUBGRADE MATERIAL, SCARIFY THE UPPER 10 INCHES BELOW THE FOOTING ELEVATION, MOISTURE CONDITION, AND RECOMPACT TO AT LEAST 96% OF THE MAXIMUM LABORATORY DENSITY AS REQUIRED BY UDOT STANDARD SPECIFICATIONS SECTION 02324.
12. AT ABUTMENTS, SOIL BEARING PRESSURE, Qr (STR.1) = 6.08 KSF.
13. AT BENTS, SOIL BEARING PRESSURE, Qr (STR.1) = 6.35 KSF.
14. SEE UT 10 - C-353 FOR UTILITY DATA NOT SHOWN.

| NO. | DATE | BY | REMARKS |
|---|---|---|---|

REVISIONS

UTAH DEPARTMENT OF TRANSPORTATION
SALT LAKE CITY, UTAH
STRUCTURES DIVISION

HORROCKS ENGINEERS

| | | | |
|---|---|---|---|
| DESIGN LRR 09/04 | CHECK MAD 09/04 | | |
| DRAWN DKJ 09/04 | CHECK LRR 09/04 | | |
| QUANT. RSH 01/05 | CHECK NBD 01/05 | | |

APPROVAL RECOMM. ____ DATE ____ SENIOR DESIGN ENGR.

APPROVED FOR USE BY UDOT ____ DATE ____ UDOT BRIDGE ENGR.

I-15; CORRIDOR IN UTAH COUNTY

I-15 1600 NORTH OVERPASS IN OREM

FOUNDATION PLAN

PROJECT NUMBER SP-15-6(52)241

UTAH
COUNTY

C-353W
DRG. NO.

SHT. 4 OF 25

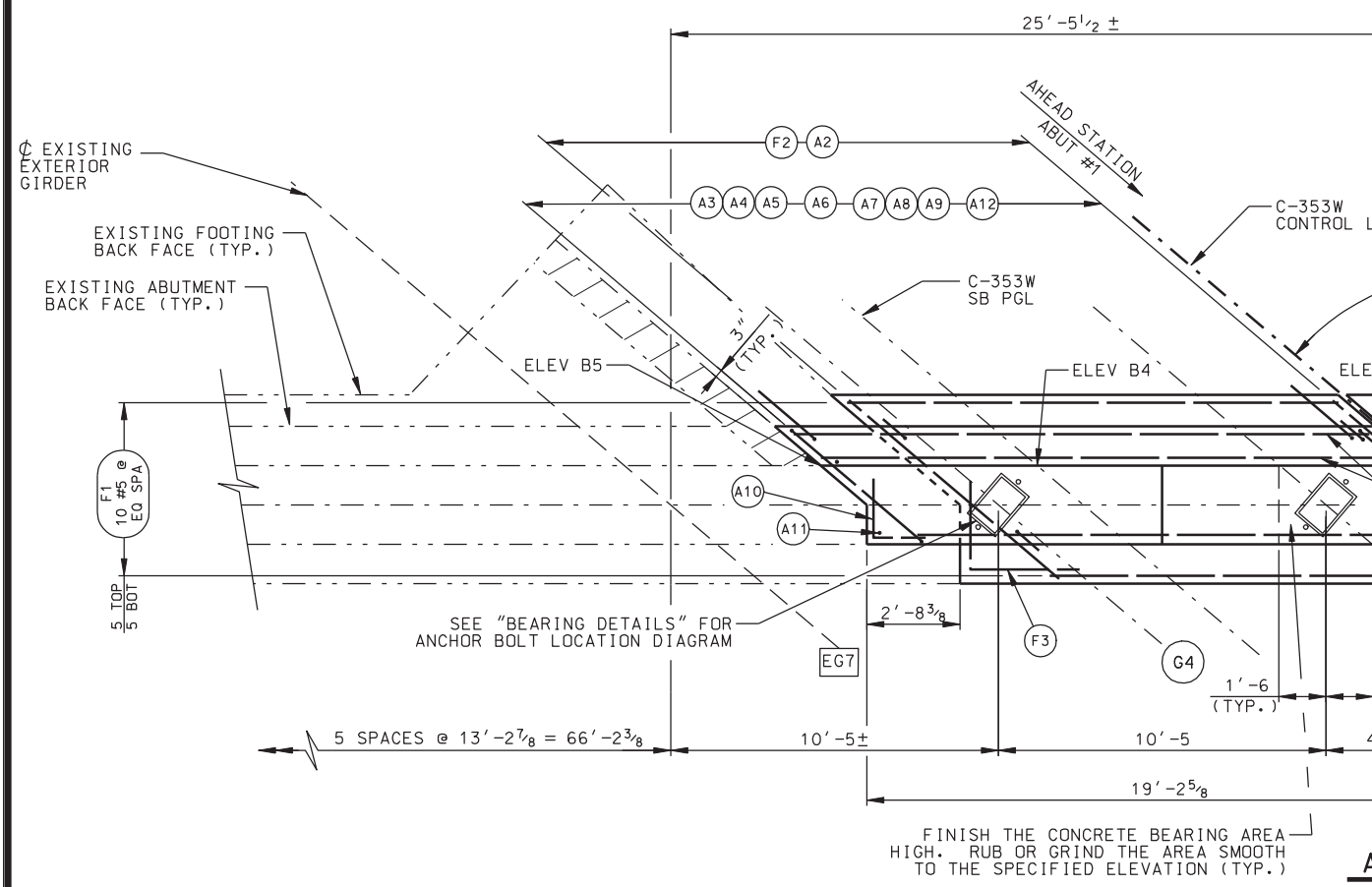


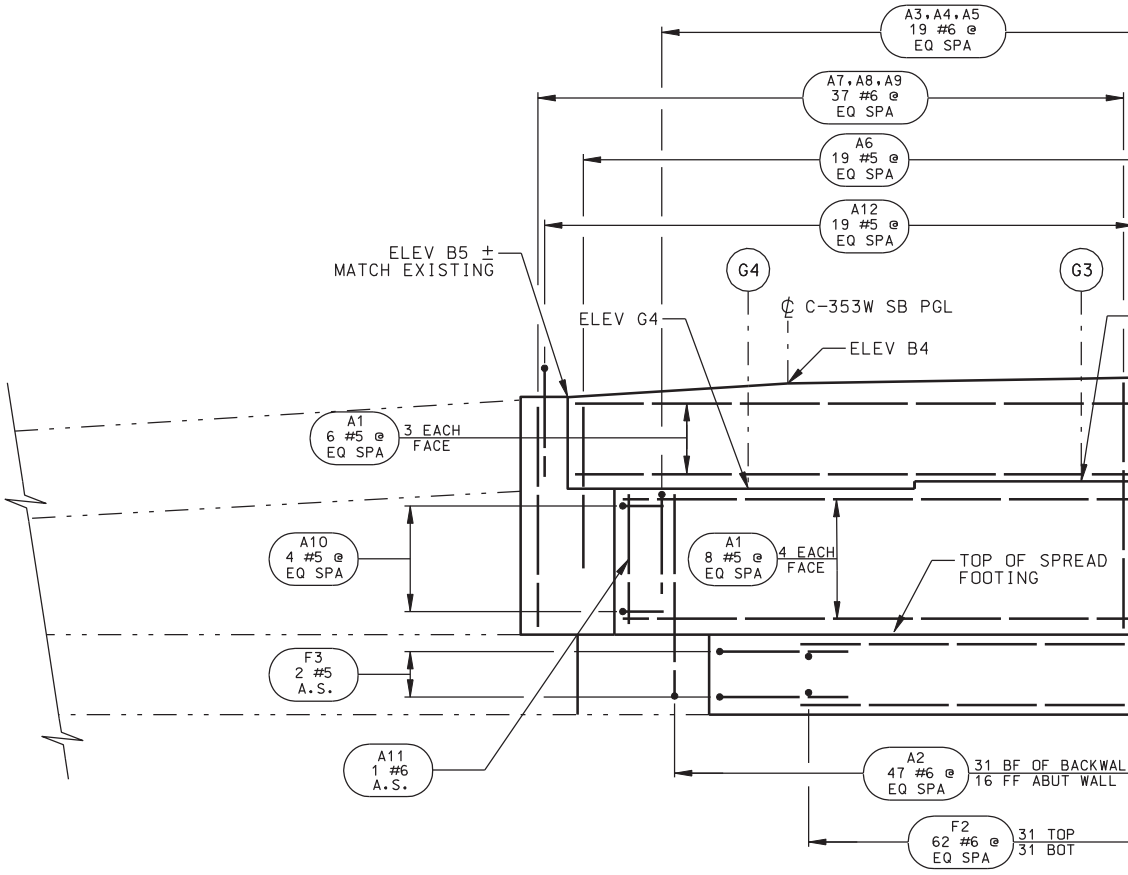


ABU

## ELEVATION SCHEDULE

| | ELEV G1 | ELEV G2 | ELEV G3 | ELEV G4 | ELEV B1 | ELEV B2 | ELEV B3 | ELEV B4 | ELEV B5 |
|---|---|---|---|---|---|---|---|---|---|
| ABUT #1 | 4530.97 | 4530.76 | 4530.62 | 4530.63 | 4534.19 | 4534.18 | 4533.84 | 4533.83 | 4533.65 |
| ABUT #4 | 4534.90 | 4534.69 | 4534.56 | 4534.47 | 4538.19 | 4538.18 | 4537.85 | 4537.83 | 4537.65 |

DGN File: IP_PWPcdns1717\4433_C-353_05_ABUT01.dgn
02-MAY-2005

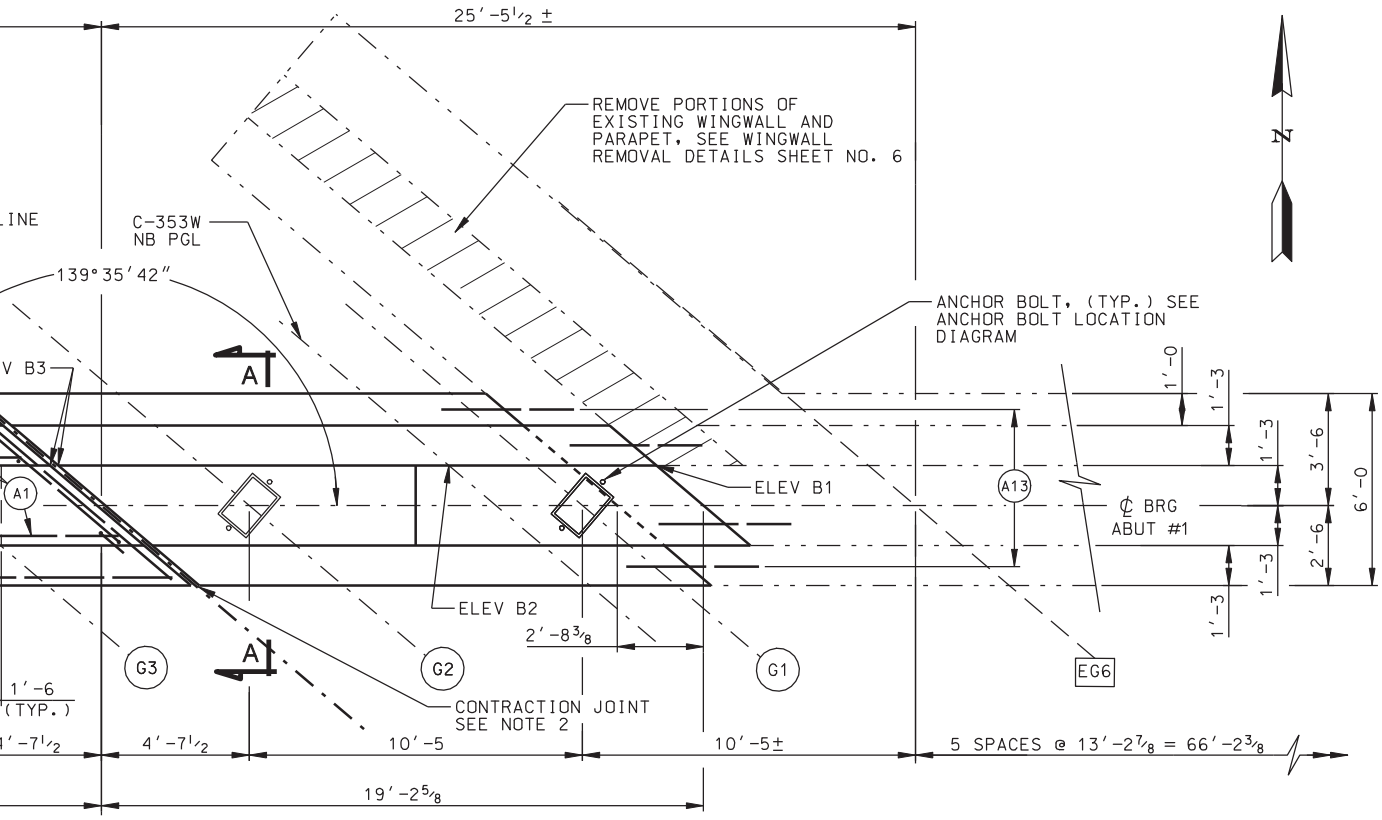


## ABUTMENT PLAN

ABUTMENT #1 SHOWN, ABUTMENT #4 SIMILAR

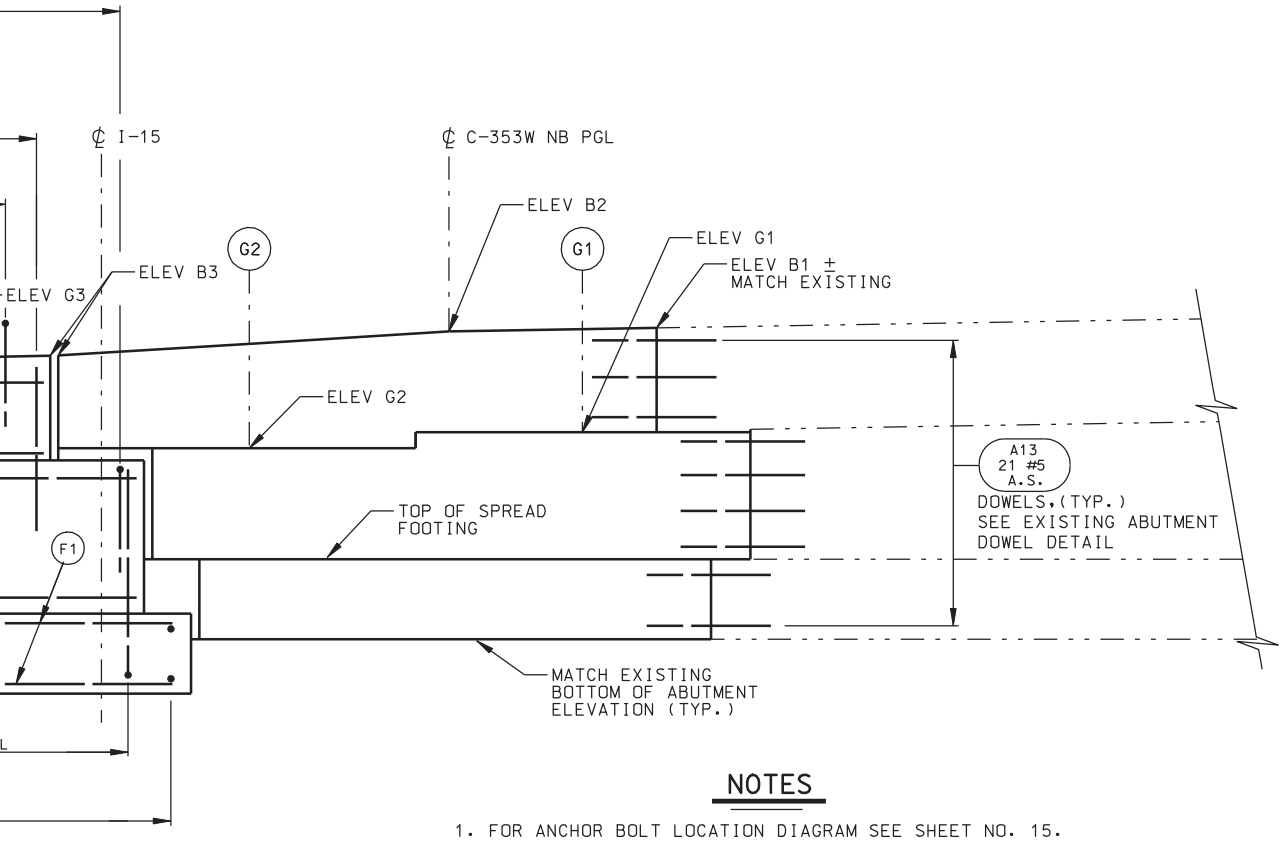


## ABUTMENT ELEVATION

## NOTES

1. FOR ANCHOR BOLT LOCATION DIAGRAM SEE SHEET NO. 15.
2. FOR SECTION A-A AND CONTRACTION JOINT DETAIL SEE SHEET NO. 6.
3. SEE "BEARING DETAILS" SHEET NO. 15 FOR BEARING AND ANCHOR BOLT DETAIL. ADJUST SPACING OF ABUTMENT REINFORCING UP TO 4" TO ACCOMMODATE ANCHOR BOLTS. MAINTAIN AT LEAST TWO BAR DIAMETERS CLEAR SPACING BETWEEN BARS.

| QUANTITIES STRUCTURAL CONCRETE | |
|---|---|
| ABUT #1 | 44.4 CY |
| ABUT #4 | 52.8 CY |

| NO. | DATE | BY | REMARKS |
|---|---|---|---|
| | | | |

REVISIONS

UTAH DEPARTMENT OF TRANSPORTATION
SALT LAKE CITY, UTAH
STRUCTURES DIVISION
HORROCKS ENGINEERS

DESIGN RSH 09/04 CHECK MAD 09/04
DRAWN DKJ 09/04 CHECK LRR 09/04
QUANT. RSH 01/05 CHECK NBD 01/05

APPROVAL RECOMM. DATE SENIOR DESIGN ENGR.
APPROVED FOR USE BY UDOT DATE UDOT BRIDGE ENGR.

I-15; CORRIDOR IN UTAH COUNTY
I-15 1600 NORTH OVERPASS IN OREM
ABUTMENT PLAN & ELEVATION

PROJECT NUMBER SP-15-6(52)241

UTAH
COUNTY

C-353W
DRG. NO.

SHT. 5 OF 25

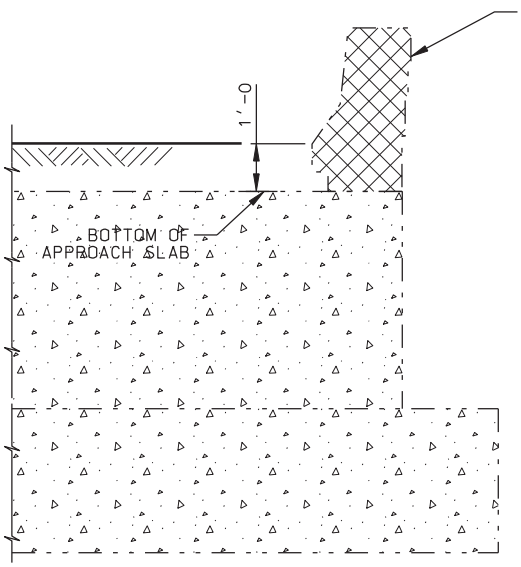


SECTION AT BACKWALL

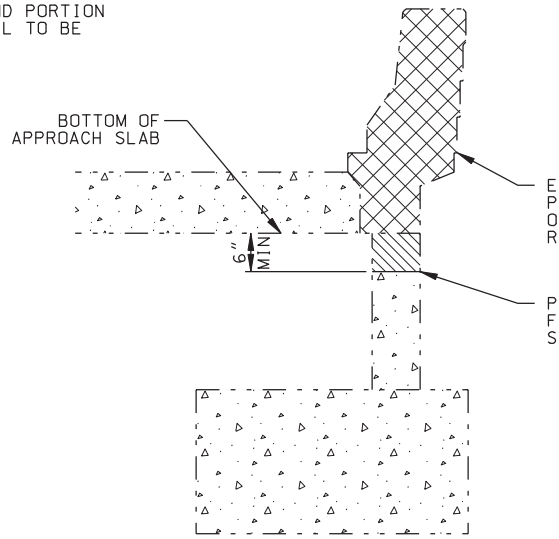


SECTION BEHIND BACKWALL

## WINGWALL REMOVAL DETAILS

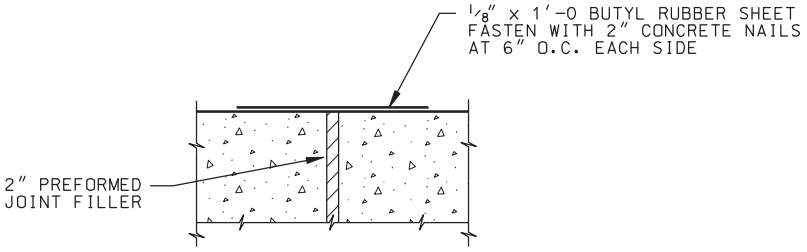


## CONTRACTION JOINT DETAIL

USE RUBBER SHEET ON FACES OF JOINT IN CONTACT WITH SOIL

XISTING CONCRETE
ARAPET AND PORTION
F WINGWALL TO BE
EMOVED

ROVIDE RIGID PLASTIC
OAM BETWEEN APPROACH
LAB AND REMAINING WINGWALL

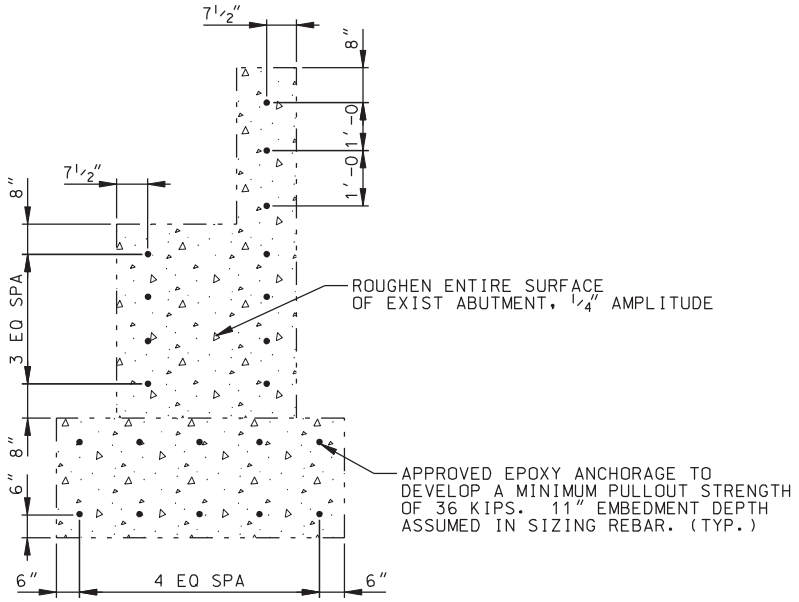


## EXISTING ABUTMENT DOWEL DETAIL

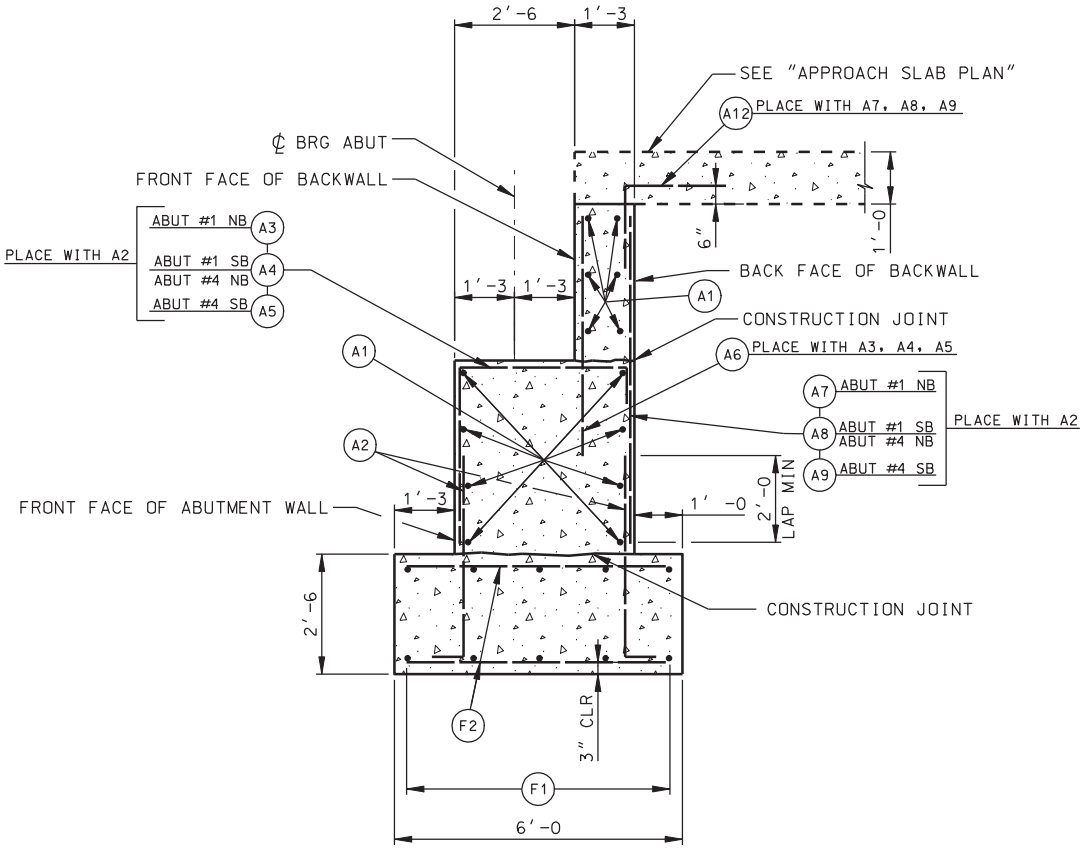


## SECTION A-A

| NO. | DATE | BY | REMARKS |
|---|---|---|---|
| | | | |

REVISIONS

UTAH DEPARTMENT OF TRANSPORTATION
SALT LAKE CITY, UTAH
STRUCTURES DIVISION

HORROCKS ENGINEERS

DESIGN RSH 09/04 CHECK MAD 09/04
DRAWN DKJ 09/04 CHECK LRR 09/04
QUANT. RSH 01/05 CHECK NBD 01/05

APPROVAL RECOMM. DATE SENIOR DESIGN ENGR.
APPROVED FOR USE BY UDOT DATE UDOT BRIDGE ENGR.

I-15; CORRIDOR IN UTAH COUNTY
I-15 1600 NORTH OVERPASS IN OREM
ABUTMENT DETAILS

PROJECT NUMBER SP-15-6(52)241

UTAH
COUNTY

C-353W
DRG. NO.

SHT. 6 OF 25

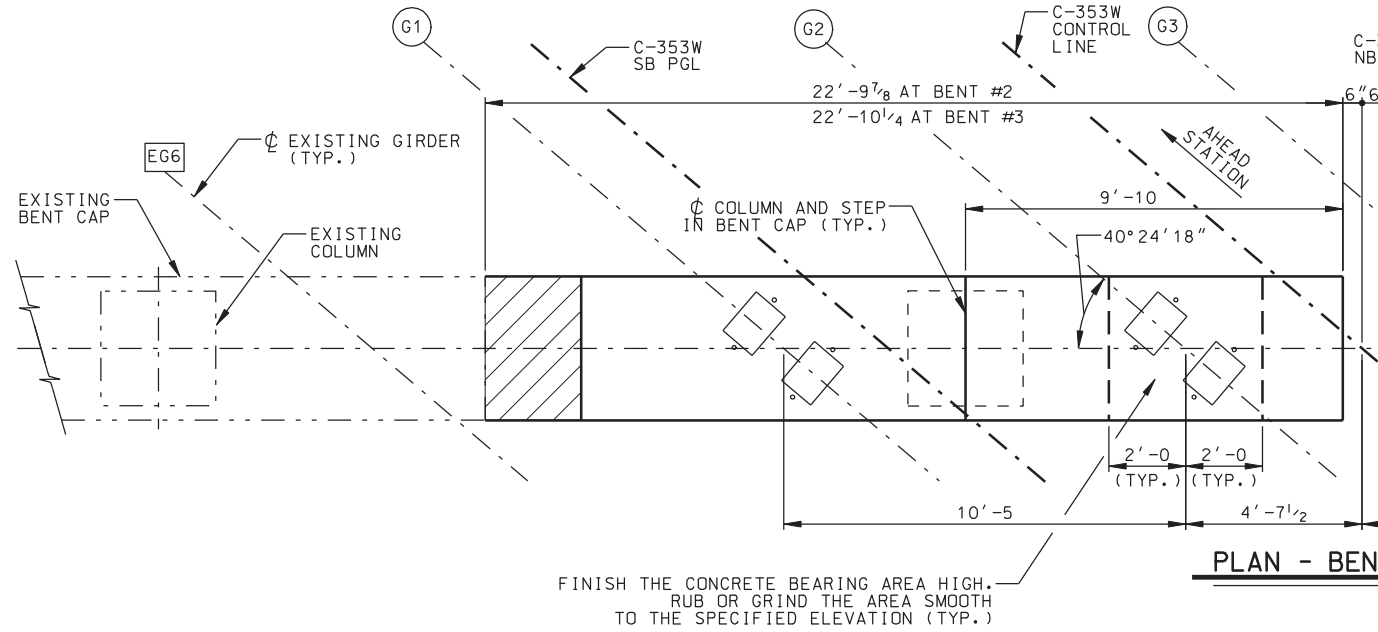


PLAN - BEN

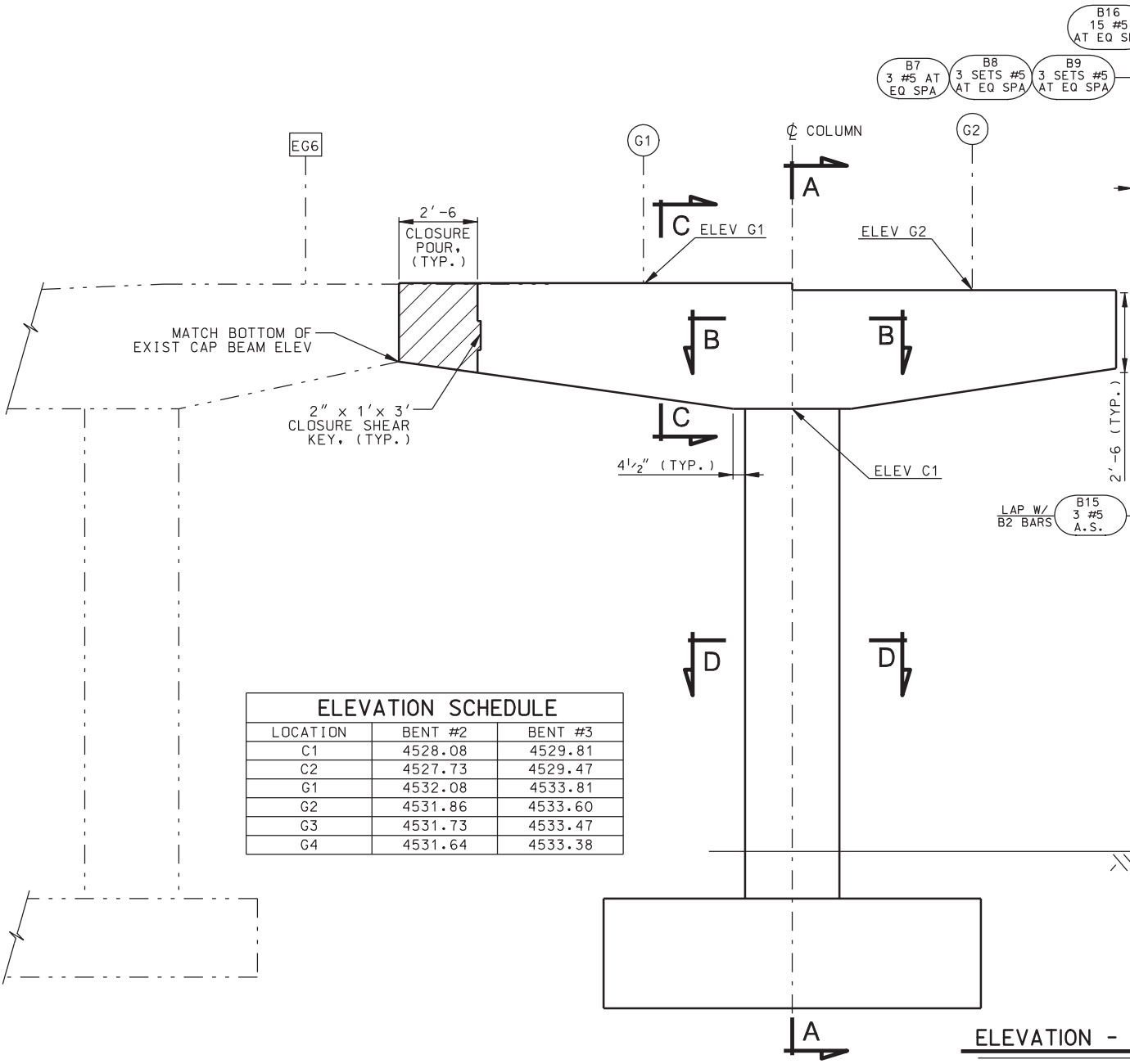


| ELEVATION SCHEDULE | | |
|---|---|---|
| LOCATION | BENT #2 | BENT #3 |
| C1 | 4528.08 | 4529.81 |
| C2 | 4527.73 | 4529.47 |
| G1 | 4532.08 | 4533.81 |
| G2 | 4531.86 | 4533.60 |
| G3 | 4531.73 | 4533.47 |
| G4 | 4531.64 | 4533.38 |

ELEVATION -

CAP REINFORCING S
FOR BOT

DGN File: IP_PWPcdms1717\4433_C-353_07_BENT01.dgn

02-MAY-2005

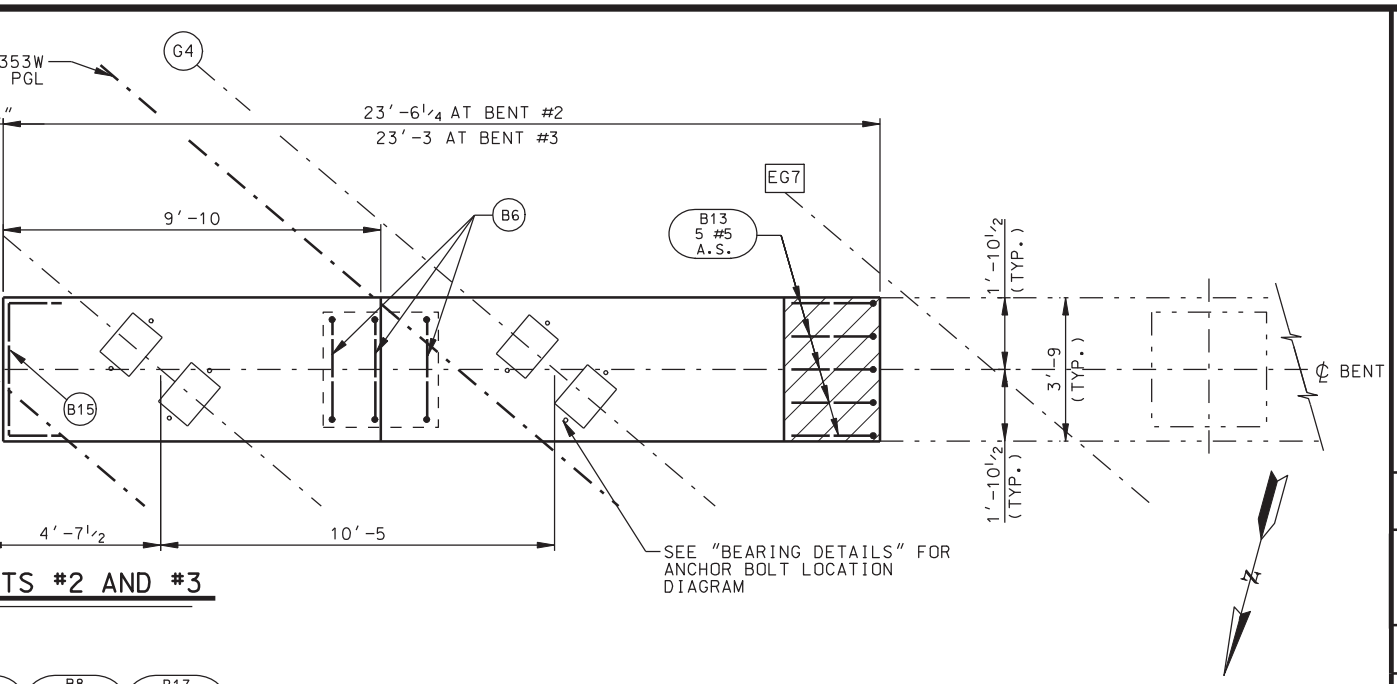


TS #2 AND #3

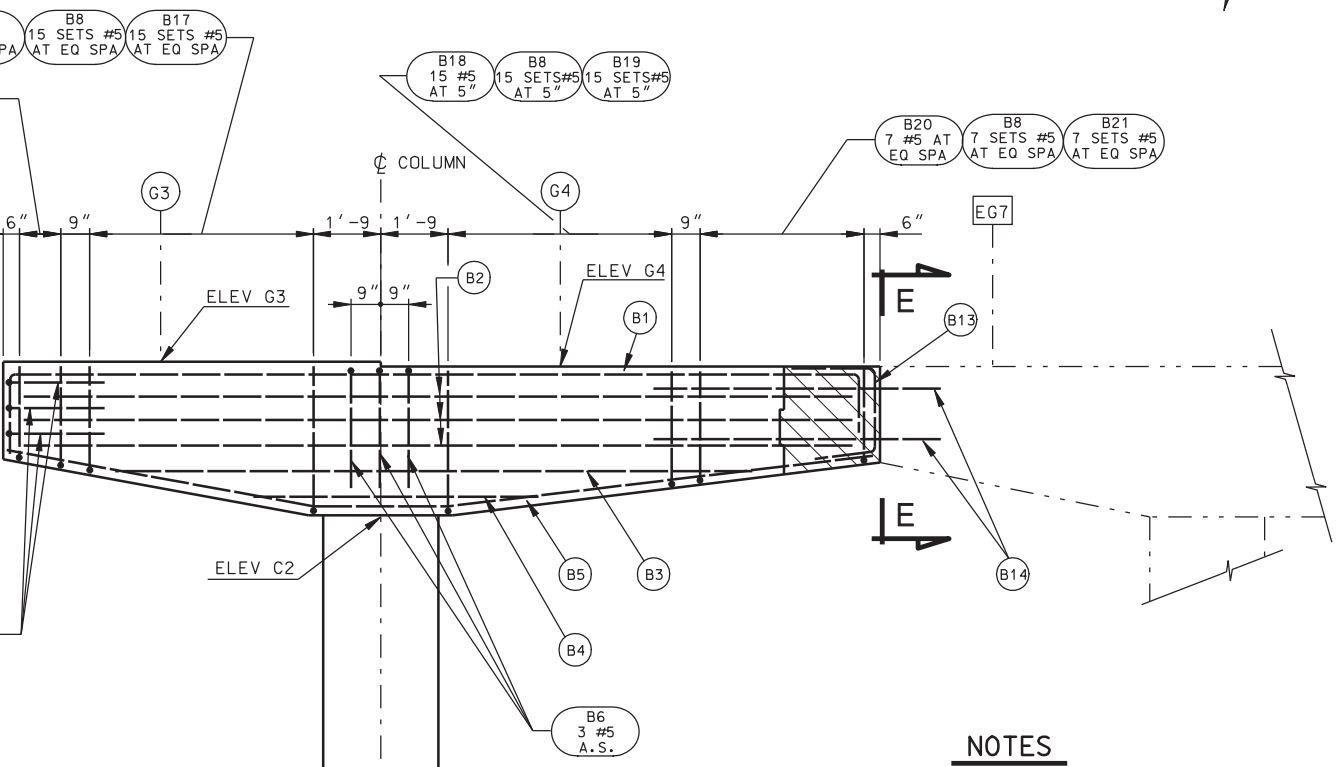


BENTS #2 AND #3

TEEL SHOWN IS SIMILAR
H BENT CAPS

## NOTES

1. PLACE STIRRUPS NORMAL TO ℄ BENT.
2. FOR SECTIONS AND COLUMN REINFORCING, SEE "BENT DETAILS" SHEET NO. 8.
3. FOR BOTTOM OF FOOTING ELEVATIONS, SEE "FOUNDATION PLAN" SHEET NO. 4.
4. FOR FOOTING REINFORCING, SEE "BENT FOOTING DETAILS" SHEET NO. 9.
5. SEE "BEARING DETAILS" SHEET NO. 15 FOR BEARING AND ANCHOR BOLT DETAIL. ADJUST SPACING OF BENT CAP REINFORCING UP TO 4" TO ACCOMMODATE ANCHOR BOLTS. MAINTAIN AT LEAST TWO BAR DIAMETERS CLEAR SPACING BETWEEN BARS.
6. EF = EACH FACE, A.S. = AS SHOWN.
7. PLACE BENT CAP CLOSURE AFTER DECK SLAB POUR SEQUENCE ① AND PRIOR TO ②, SEE "DECK SLAB PLAN".

## QUANTITIES
STRUCTURAL CONCRETE

| LOCATION | BENT #2 | BENT #3 |
|---|---|---|
| BENT CAP | 21.4 CY | 21.4 CY |
| COLUMN | 10.6 CY | 11.7 CY |
| TOTAL | 32.0 CY | 33.1 CY |

| NO. | DATE | BY | REMARKS |
|---|---|---|---|
| | | | |

REVISIONS

UTAH DEPARTMENT OF TRANSPORTATION
SALT LAKE CITY, UTAH
STRUCTURES DIVISION
HORROCKS ENGINEERS

DESIGN LRR 09/04 CHECK MAD 09/04
DRAWN DKJ 09/04 CHECK LRR 09/04
QUANT. RSH 01/05 CHECK NBD 01/05

APPROVAL RECOMM. DATE SENIOR DESIGN ENGR.
APPROVED FOR USE BY UDOT DATE UDOT BRIDGE ENGR.

I-15; CORRIDOR IN UTAH COUNTY
I-15 1600 NORTH OVERPASS IN OREM
BENT PLAN AND ELEVATION
PROJECT NUMBER SP-15-6(52)241

UTAH
COUNTY
C-353W
DRG. NO.
SHT. 7 OF 25

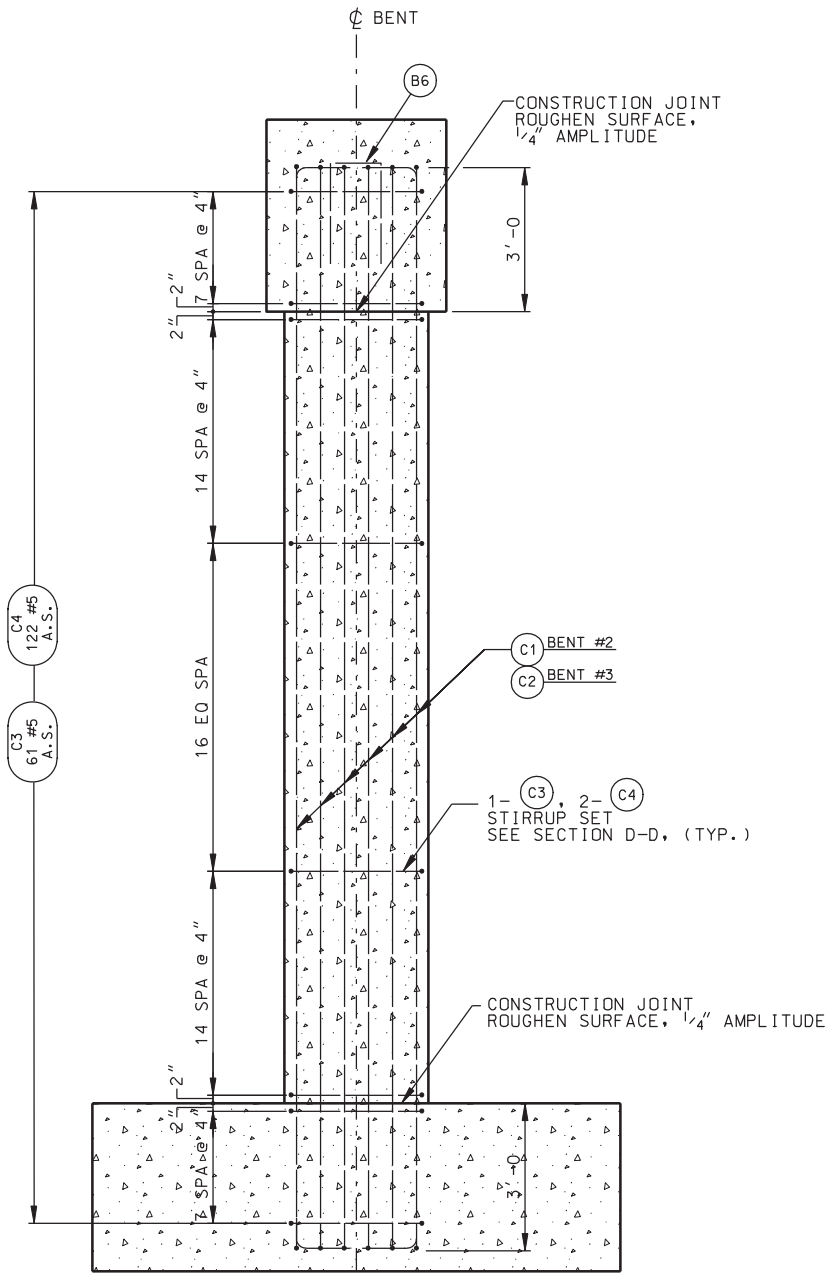


## SECTION A-A

SEE "BENT FOOTING DETAILS"
FOR FOOTING REINFORCEMENT.

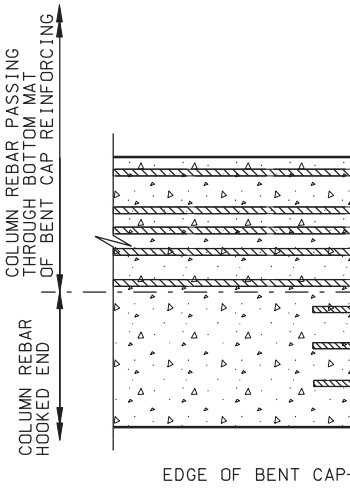


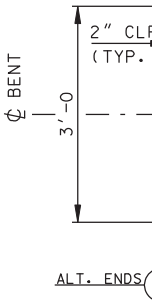


DGN File:IP_PWPcdms1717\4433_C-353.08_BENTDT01.dgn

02-MAY-2005

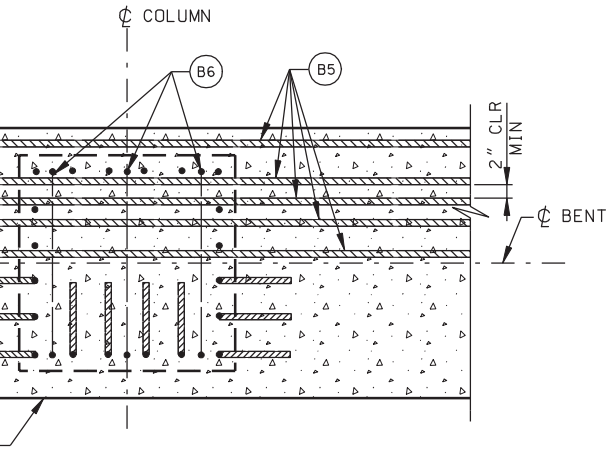


SECTION B-B

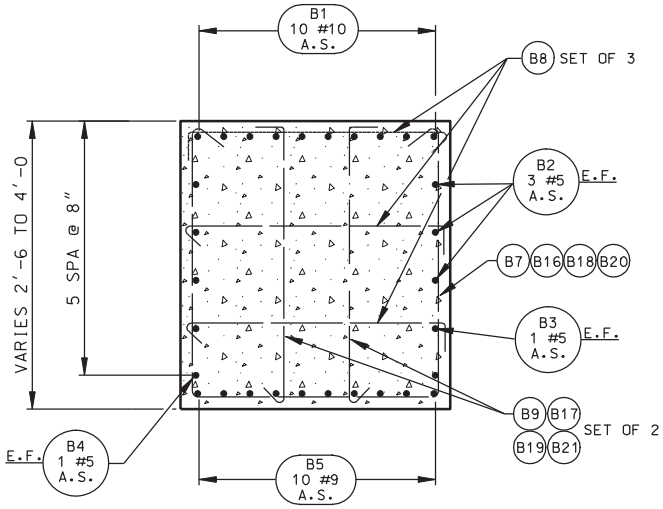


SECTION C-C

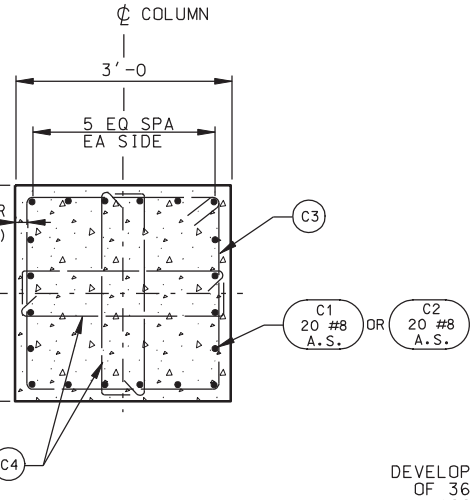


SECTION D-D

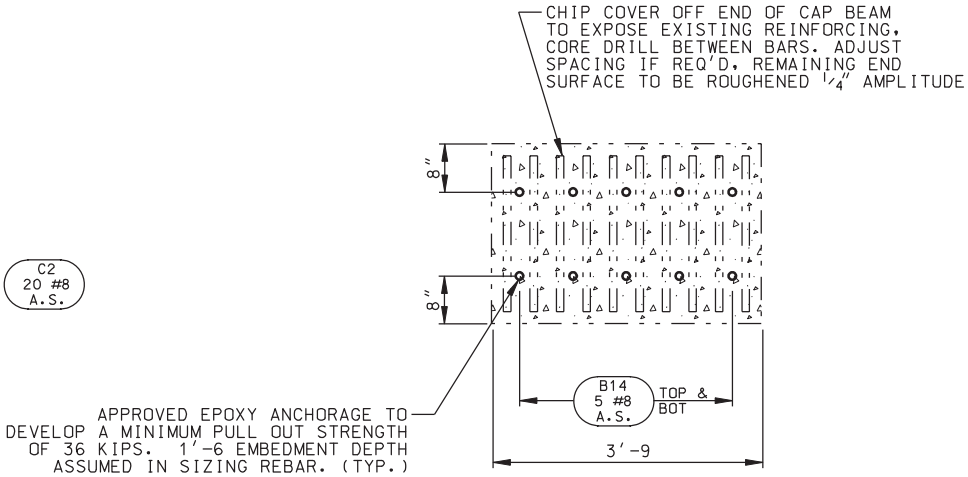


SECTION E-E

## NOTES

1. ADJUST SPACING OF PILE CAP AND BENT CAP REINFORCING UP TO 4" TO ACCOMMODATE COLUMN REINFORCING. MAINTAIN AT LEAST THREE BAR DIAMETER SPACING.
2. ADJUST HOOP AND TIE REINFORCING TO AVOID CONFLICT WITH BENT CAP REINFORCING.

| NO. | DATE | BY | REMARKS |
|---|---|---|---|
| | | | |

REVISIONS

UTAH DEPARTMENT OF TRANSPORTATION
SALT LAKE CITY, UTAH
STRUCTURES DIVISION

HORROCKS ENGINEERS

DESIGN LRR 09/04 CHECK MAD 09/04
DRAWN DKJ 09/04 CHECK LRR 09/04
QUANT. RSH 01/05 CHECK NBD 01/05

APPROVAL RECOMM. DATE SENIOR DESIGN ENGR.
APPROVED FOR USE BY UDOT DATE UDOT BRIDGE ENGR.

I-15; CORRIDOR IN UTAH COUNTY
I-15 1600 NORTH OVERPASS IN OREM
BENT DETAILS
PROJECT NUMBER SP-15-6(52)241

UTAH
COUNTY

C-353W
DRG. NO.

SHT. 8 OF 25

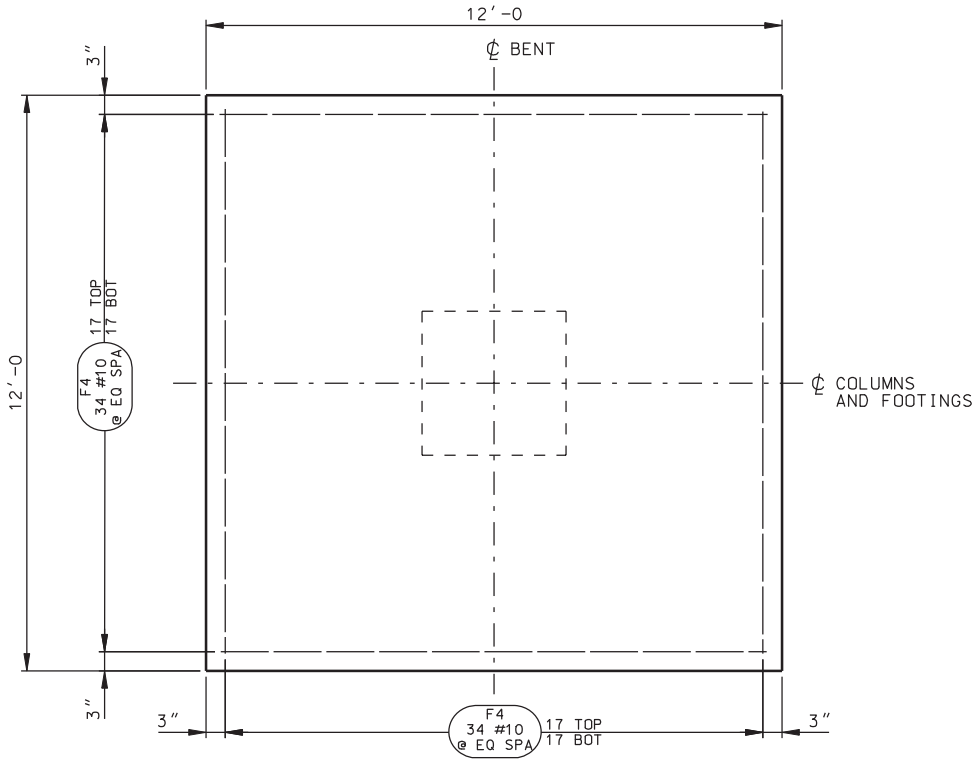


## FOOTING PLAN - BENTS #2 AND #3

ADJUST SPACING OF FOOTING REINFORCEMENT UP TO 4" TO ACCOMMODATE COLUMN REINFORCEMENT.

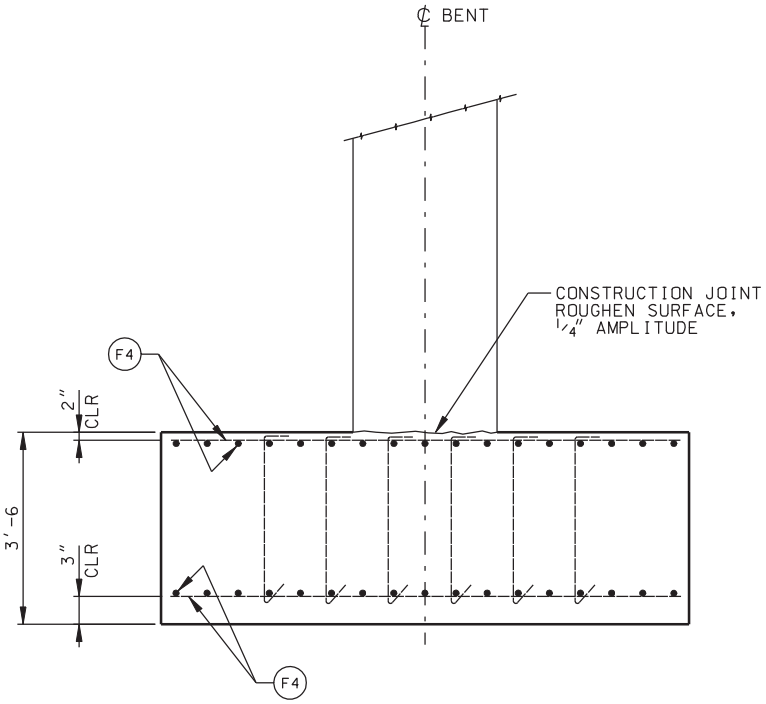


## ELEVATION - BENTS #2 AND #3

COLUMN REINFORCEMENT NOT SHOWN FOR CLARITY.

DGN File:IP_PWPcdms1717\4433_C-353_09_BENTDT02.dgn
02-MAY-2005

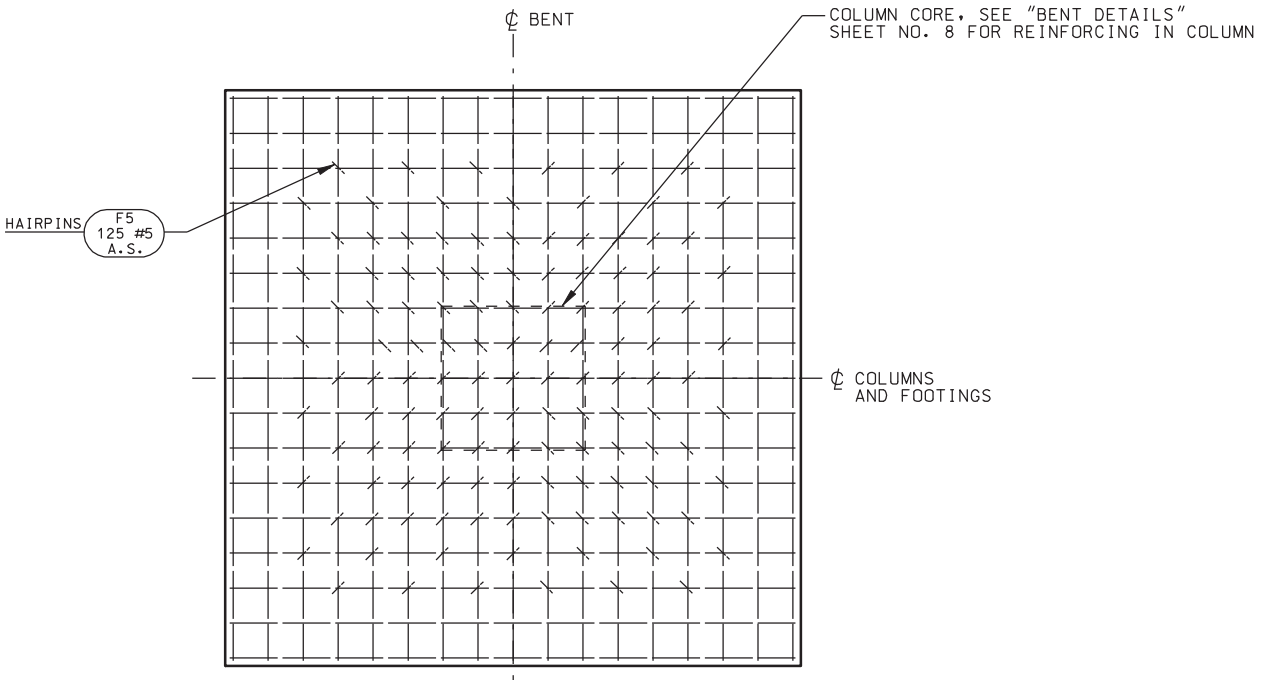


## FOOTING TIE SPACING

TOP REINFORCING SHOWN, HOOK BARS AROUND BOTTOM MAT OF REINFORCING AS SHOWN IN ELEVATION.

| QUANTITIES | |
|---|---|
| STRUCTURAL CONCRETE | |
| BENTS #2 & #3 (4 LOCATIONS) | 74.7 CY |

REVISIONS

| NO. | DATE | BY | REMARKS |
|---|---|---|---|
| | | | |

UTAH DEPARTMENT OF TRANSPORTATION
SALT LAKE CITY, UTAH
STRUCTURES DIVISION
HORROCKS ENGINEERS

DESIGN LRR 09/04 CHECK MAD 09/04
DRAWN DKJ 09/04 CHECK LRR 09/04
QUANT. RSH 01/05 CHECK NBD 01/05

APPROVAL RECOMM. DATE SENIOR DESIGN ENGR.
APPROVED FOR USE BY UDOT DATE UDOT BRIDGE ENGR.

I-15; CORRIDOR IN UTAH COUNTY
I-15 1600 NORTH OVERPASS IN OREM
BENT FOOTING DETAILS
PROJECT NUMBER SP-15-6(52)241

UTAH
COUNTY

C-353W
DRG. NO.

SHT. 9 OF 25

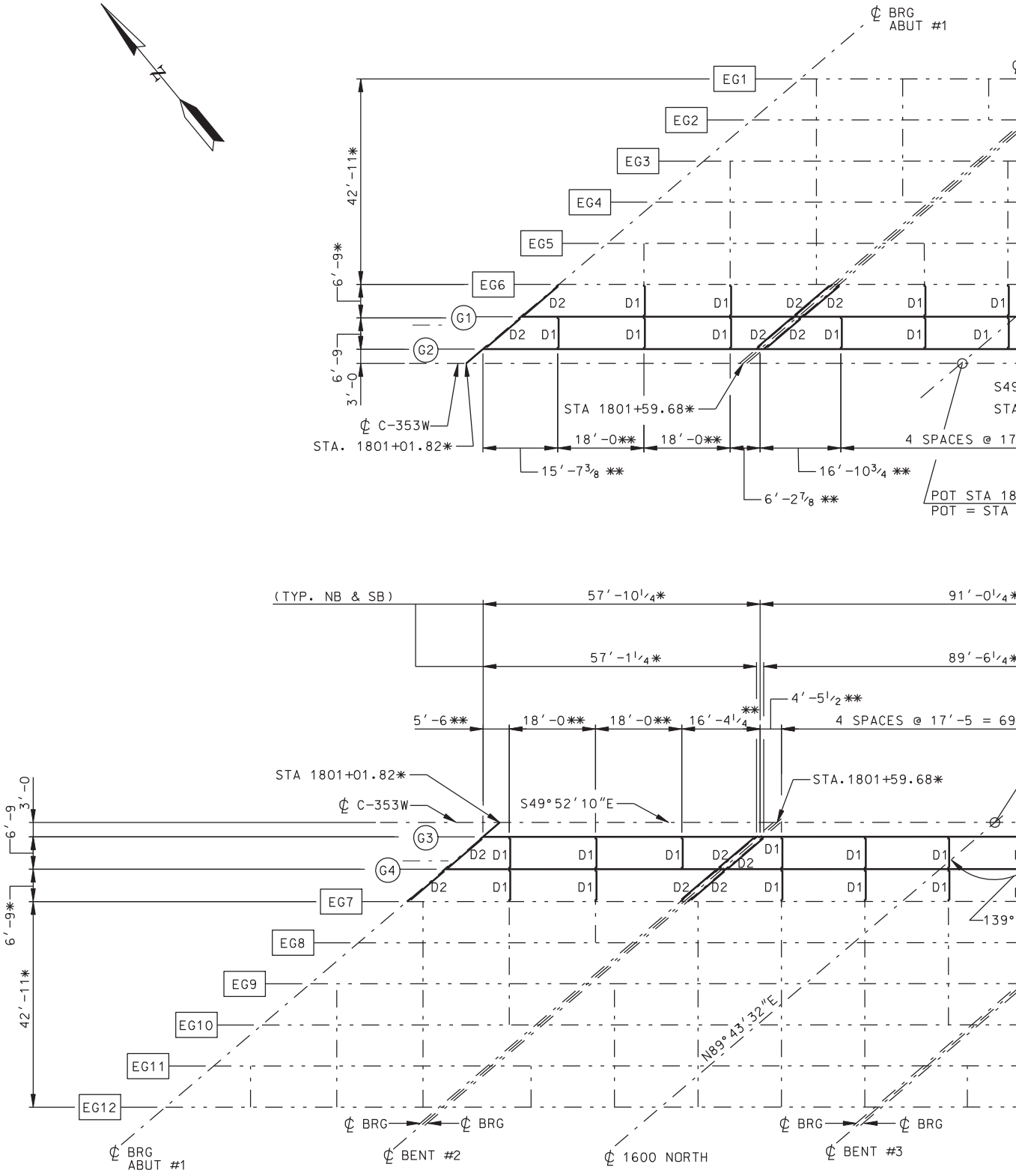


## NOTES

1. (G1) (G2) (G3) (G4) ARE PARALLEL TO BEARING S49°52'10"E.
2. SEE "GIRDER DETAILS 1" SHEET NO. 11 FOR GIRDER ELEVATIONS.
3. SEE "GIRDER DETAILS 2" SHEET NO. 12 FOR GIRDER DETAILS AND GENERAL NOTES.
4. SEE "DIAPHRAGM DETAILS 1" SHEET NO. 13 FOR DIAPHRAGM LAYOUT.
5. PLACE ALL INTERMEDIATE DIAPHRAGM STIFFENERS NORMAL TO THE WEB.

## FRAMING PLAN

DGN File: IP_PWPcdms1717\4433_C-353_10_FRAM01.dgn
02-MAY-2005

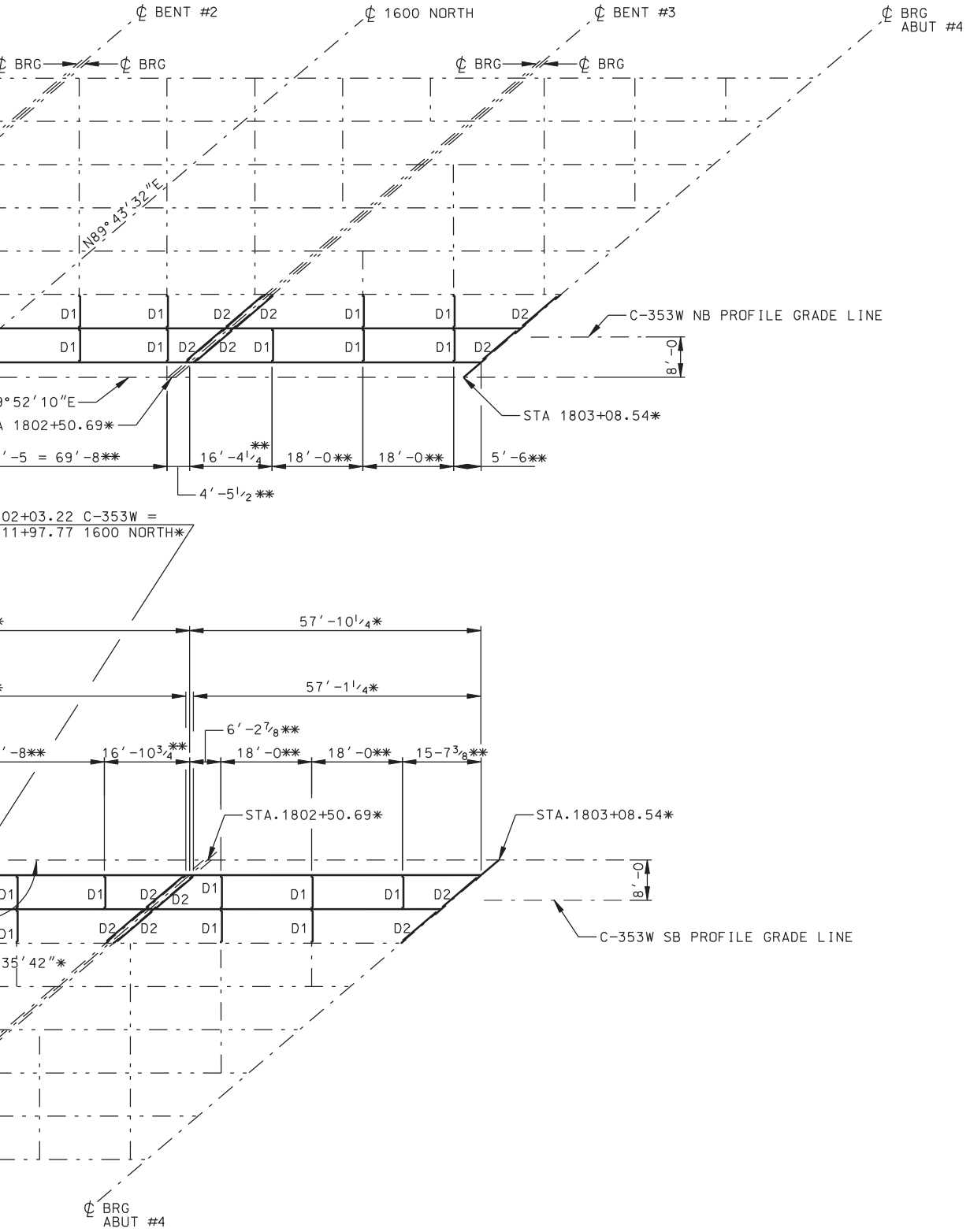


* SEE "SITUATION & LAYOUT 1" SHEET GENERAL NOTE 6.

** FIELD VERIFY EXISTING DIAPHRAGM LOCATION. LINE UP NEW DIAPHRAGM WITH EXISTING DIAPHRAGMS.

EG1 — - — - EXISTING GIRDER MARK NUMBER

(G1) — - — - — NEW GIRDER MARK NUMBER

| NO. | DATE | BY | REMARKS |
|---|---|---|---|

REVISIONS

UTAH DEPARTMENT OF TRANSPORTATION
SALT LAKE CITY, UTAH
STRUCTURES DIVISION

HORROCKS ENGINEERS

DESIGN RSH 09/04 CHECK MAD 09/04
DRAWN DKJ 09/04 CHECK LRR 09/04
QUANT. RSH 01/05 CHECK NBD 01/05

APPROVAL RECOMM. DATE SENIOR DESIGN ENGR.
APPROVED FOR USE BY UDOT DATE UDOT BRIDGE ENGR.

I-15; CORRIDOR IN UTAH COUNTY
I-15 1600 NORTH OVERPASS IN OREM
FRAMING PLAN

PROJECT NUMBER SP-15-6(52)241

UTAH
COUNTY

C-353W
DRG. NO.

SHT. 10 OF 25

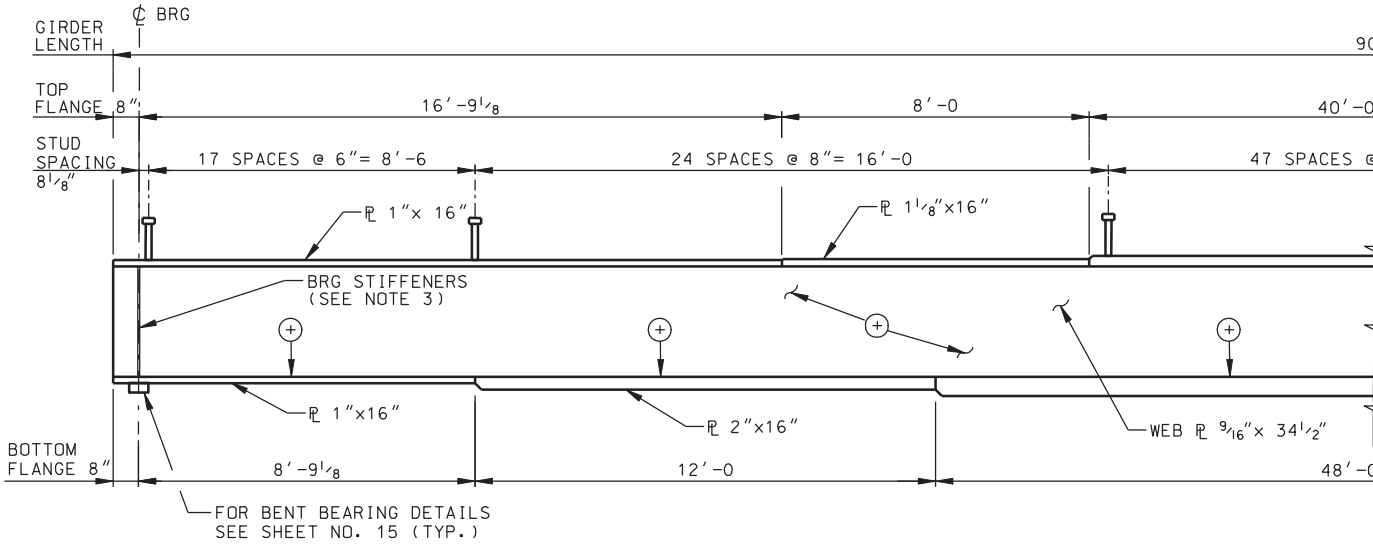


CENTER SPAN GI

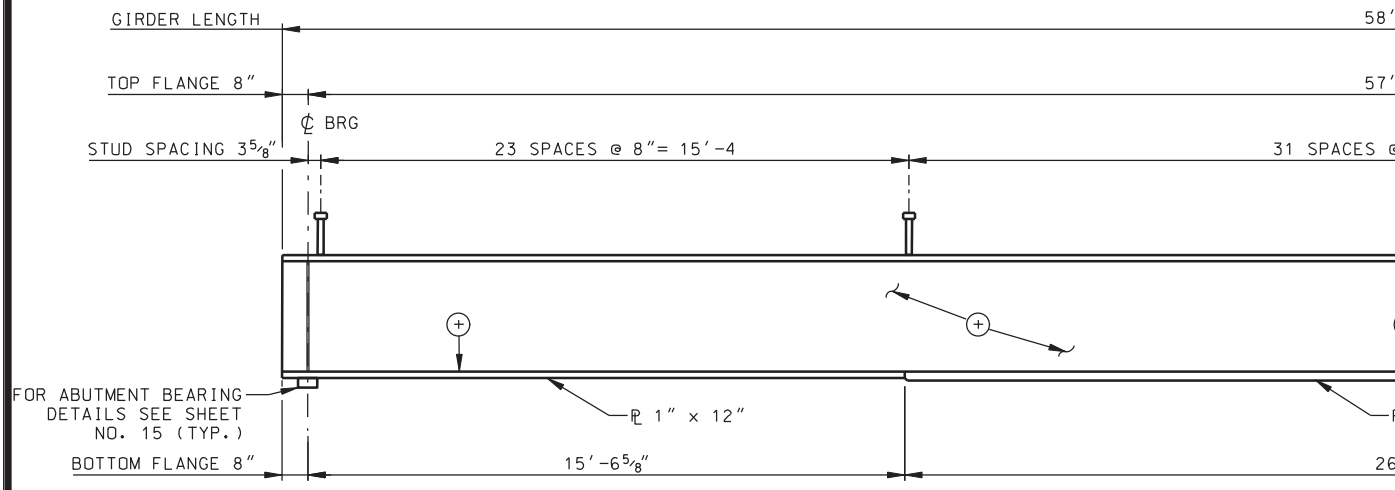


END SPAN GIRD

DGN File:IP_PWPcdms1717\4433_C-353_11_GIRDERDET01.dgn

02-MAY-2005

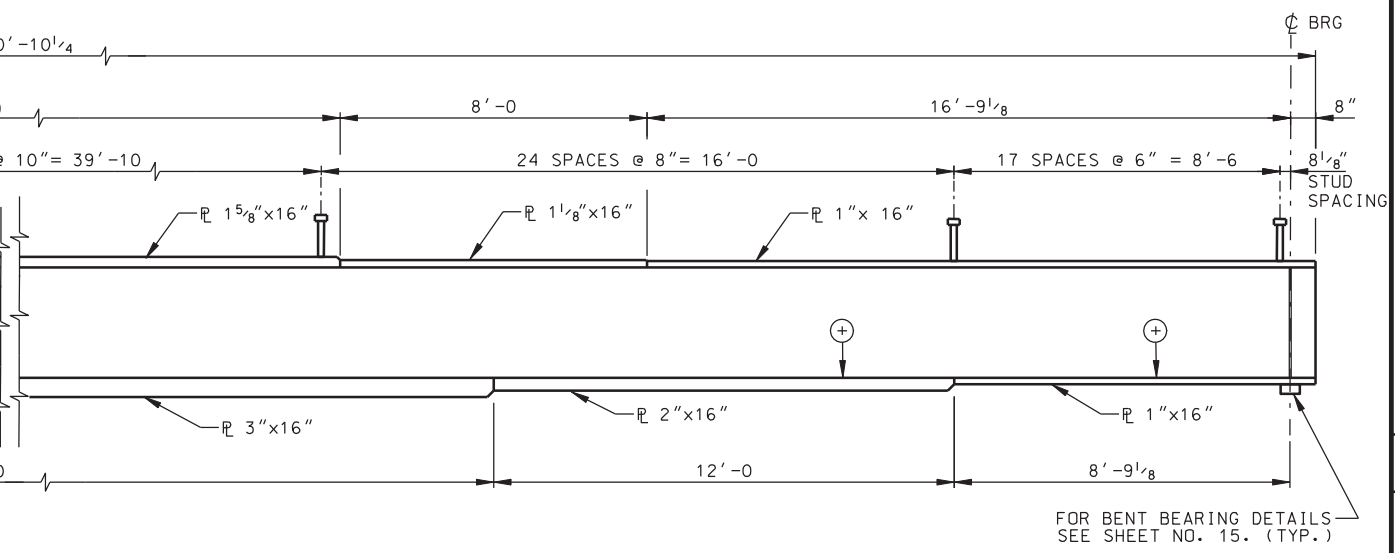


RDER ELEVATION

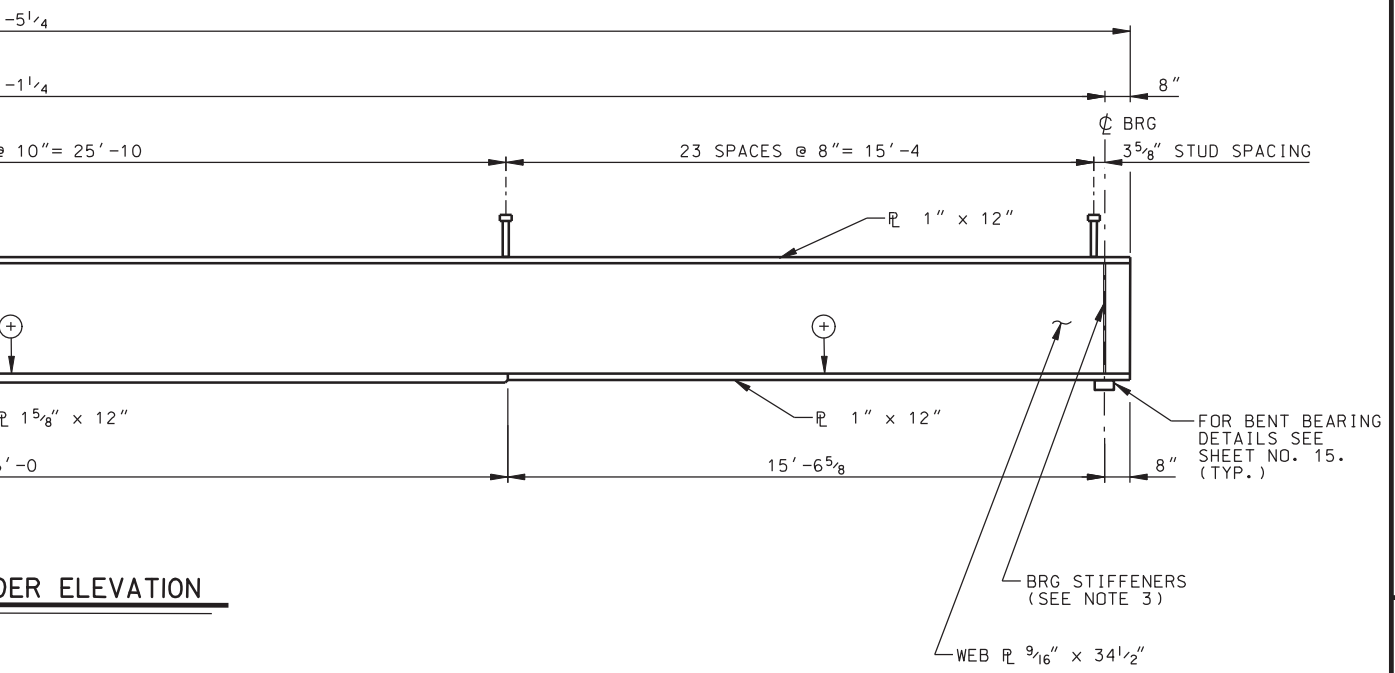


DER ELEVATION

## NOTES

1. INTERMEDIATE STIFFENERS NOT SHOWN. SEE SHEET 10 FOR INTERMEDIATE DIAPHRAGM STIFFENER LOCATIONS.
2. FOR WELDING DETAILS, WELDING SPECIFICATIONS, STUD DETAILS AND GENERAL NOTES SEE SHEET 12.
3. FOR BEARING STIFFENER SIZE AND LOCATION SEE SHEET 13.

| QUANTITIES STRUCTURAL STEEL | |
|---|---|
| ALL SPANS | 201,094 LBS |

| NO. | DATE | BY | REMARKS |
|---|---|---|---|
| | | | |

REVISIONS

UTAH DEPARTMENT OF TRANSPORTATION
SALT LAKE CITY, UTAH
STRUCTURES DIVISION
HORROCKS ENGINEERS

DESIGN RSH 09/04 CHECK MAD 09/04
DRAWN DKJ 09/04 CHECK LRR 09/04
QUANT. RSH 01/05 CHECK NBD 01/05

APPROVAL RECOMM. DATE SENIOR DESIGN ENGR.
APPROVED FOR USE BY UDOT DATE UDOT BRIDGE ENGR.

I-15; CORRIDOR IN UTAH COUNTY
I-15 1600 NORTH OVERPASS IN OREM
GIRDER DETAILS 1
PROJECT NUMBER SP-15-6(52)241

UTAH
COUNTY

C-353W
DRG. NO.

SHT. 11 OF 25

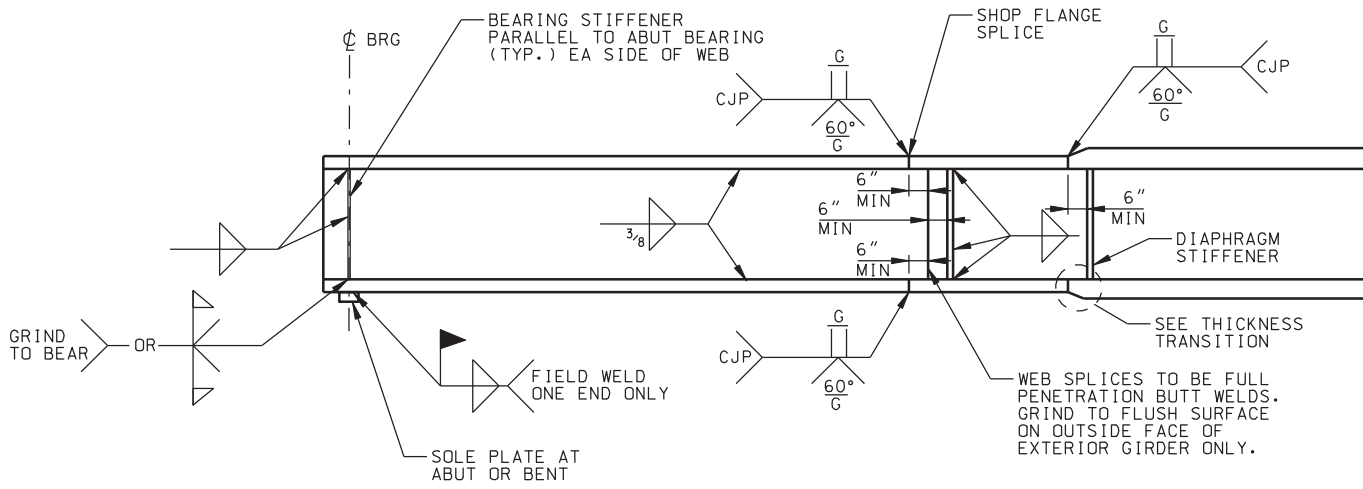


## TYPICAL GIRDER

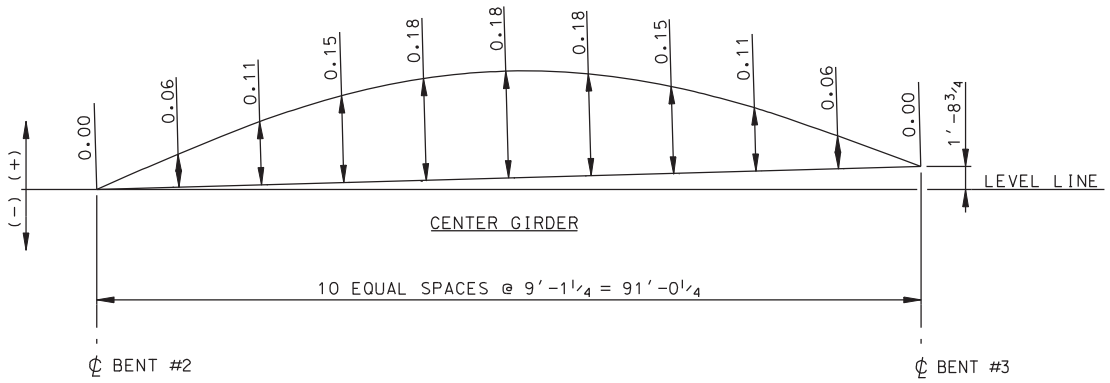


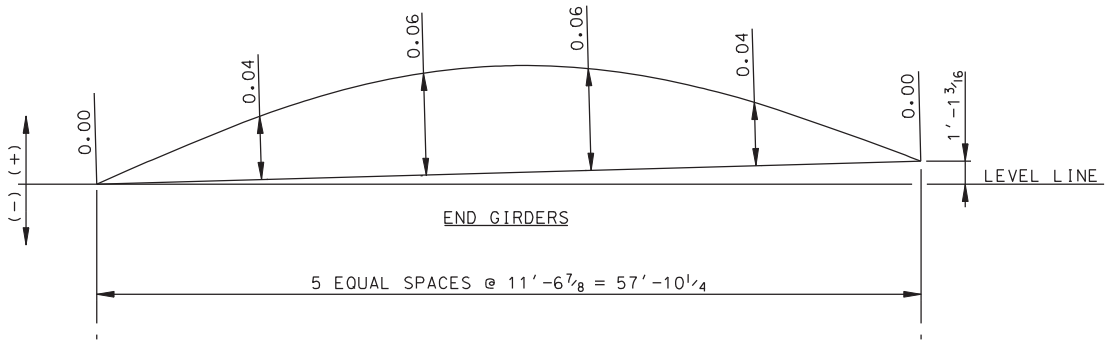


## CAMBER DIAGRAM

(DEFLECTIONS ARE IN FEET)

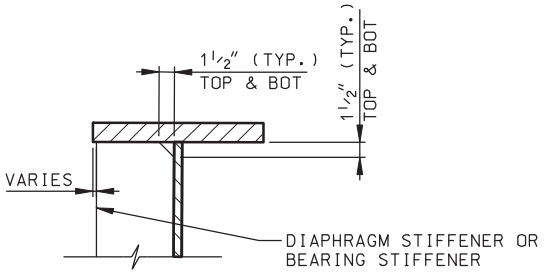


## STIFFENER DETAIL

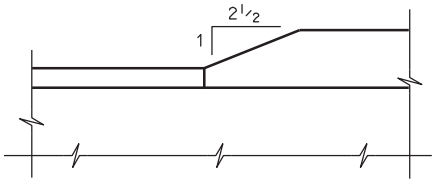


## THICKNESS TRANSITION

DGN File:IP_PWPcdms1717\4433_C-353_12_GIRDERDET02.dgn
02-MAY-2005

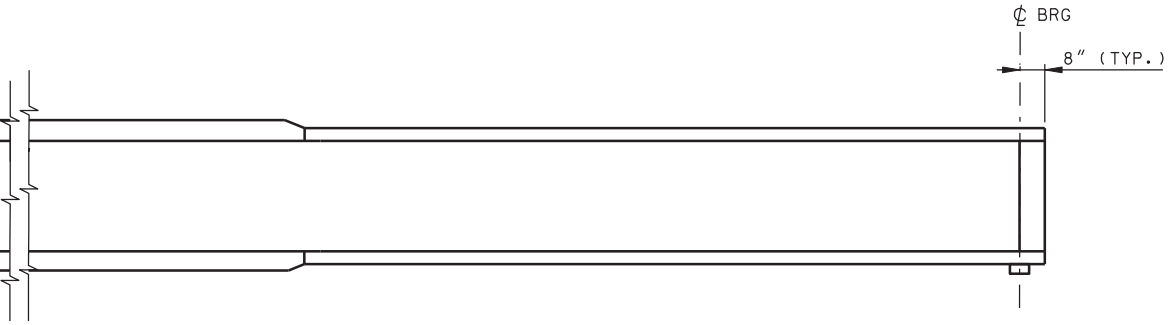


NOTE:
FOR DIAPHRAGM SIFFENER LOCATIONS
SEE FRAMING PLAN SHEET.

## FABRICATION DETAIL

## NOTES

1. ERECT THE GIRDERS WITH THE NATURAL CAMBER UP.
2. PERFORM CHARPY V-NOTCH TOUGHNESS TEST ON ALL MAIN LOAD CARRYING MEMBERS INDICATED BY ⊕ TO MEET REQUIREMENTS FOR ZONE 2.
3. ALL DIMENSIONS SHOWN ARE HORIZONTAL. ADJUST LENGTHS AS NECESSARY IN FABRICATION TO TAKE VERTICAL GRADE INTO ACCOUNT.
4. ALL INTERMEDIATE DIAPHRAGMS ARE NORMAL TO THE WEB. BEARING STIFFENERS ARE PARALLEL TO THE CENTERLINE OF BEARING.
5. CENTERLINES OF GIRDERS ARE PARALLEL TO CENTERLINE C-353W.
6. INCLUDE THE PRICE FOR SHEAR STUDS, BOLTS AND STIFFENERS IN THE CONTRACT PRICE FOR STRUCTURAL STEEL.
7. SEE "BEARING DETAILS" SHEET NO. 15 FOR SOLE PLATE AND BEARING DETAILS.
8. USE STRUCTURAL STEEL CONFORMING TO AASHTO M270 GRADE 36 MINIMUM FOR ALL STRUCTURAL STEEL.
9. CONFORM WELDING, WELDER QUALIFICATIONS, PREQUALIFICATION OF WELD DETAILS AND INSPECTION OF WELDS TO THE REQUIREMENTS OF THE ANSI/AASHTO/AWS BRIDGE WELDING CODE D1.5.
10. THE METHODS OF JOINT PREPARATION FOR WELDING SHOWN ON THE PLANS ARE BASED ON THE USE OF MANUAL SHIELDED METAL-ARC WELDING. THE USE OF THIS OR ANY OTHER WELDING PROCESS WILL BE SATISFACTORY ONLY AFTER THE WELDING PROCEDURE HAS BEEN SUBMITTED BY THE CONTRACTOR AND APPROVED BY THE ENGINEER.
11. USE THE MINIMUM SIZED STRENGTH FILLET WELDS REQUIRED BY ANSI/AASHTO/AWS BRIDGE WELDING CODE D1.5 FOR THE THICKNESS OF THE MATERIAL JOINED UNLESS OTHERWISE SPECIFIED. USE MINIMUM FILLET WELD SIZE OF 1/4″, EXCEPT WHERE NOTED OTHERWISE.
12. DIMENSIONS SHOWN ON THE PLANS ASSUME THE AMBIENT TEMPERATURE OF THE GIRDER TO BE 70°F±. CORRECT THE LENGTH USED IN FABRICATION AT THE RATE OF 1/16″ PER EACH 100′ OF LENGTH FOR EVERY 10°F DIFFERENCE IN TEMPERATURE TO ALLOW FOR EXPANSION AND CONTRACTION.
13. DO NOT FIELD WELD TO GIRDERS EXCEPT WHERE NOTED OTHERWISE.
14. ALL BOLTED CONNECTIONS SHALL BE MADE WITH 7/8″ DIA. HIGH STRENGTH BOLTS CONFORMING TO ASTM A325, TYPE 1, UNLESS NOTED OTHERWISE.

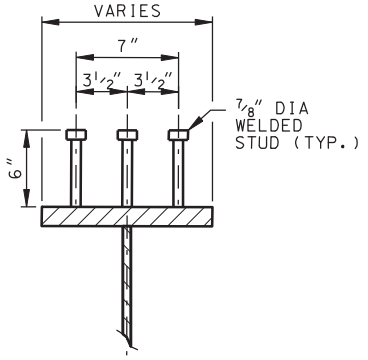


## SHEAR STUD DETAIL

| NO. | DATE | BY | REMARKS |
|---|---|---|---|
| | | | |

REVISIONS

UTAH DEPARTMENT OF TRANSPORTATION
SALT LAKE CITY, UTAH
STRUCTURES DIVISION
HORROCKS ENGINEERS

DESIGN LRR 09/04 CHECK MAD 09/04
DRAWN DKJ 09/04 CHECK LRR 09/04
QUANT. RSH 01/05 CHECK NBD 01/05

APPROVAL RECOMM. DATE SENIOR DESIGN ENGR.
APPROVED FOR USE BY UDOT DATE UDOT BRIDGE ENGR.

I-15; CORRIDOR IN UTAH COUNTY
I-15 1600 NORTH OVERPASS IN OREM
GIRDER DETAILS 2
PROJECT NUMBER SP-15-6(52)241

UTAH
COUNTY

C-353W
DRG. NO.

SHT. 12 OF 25

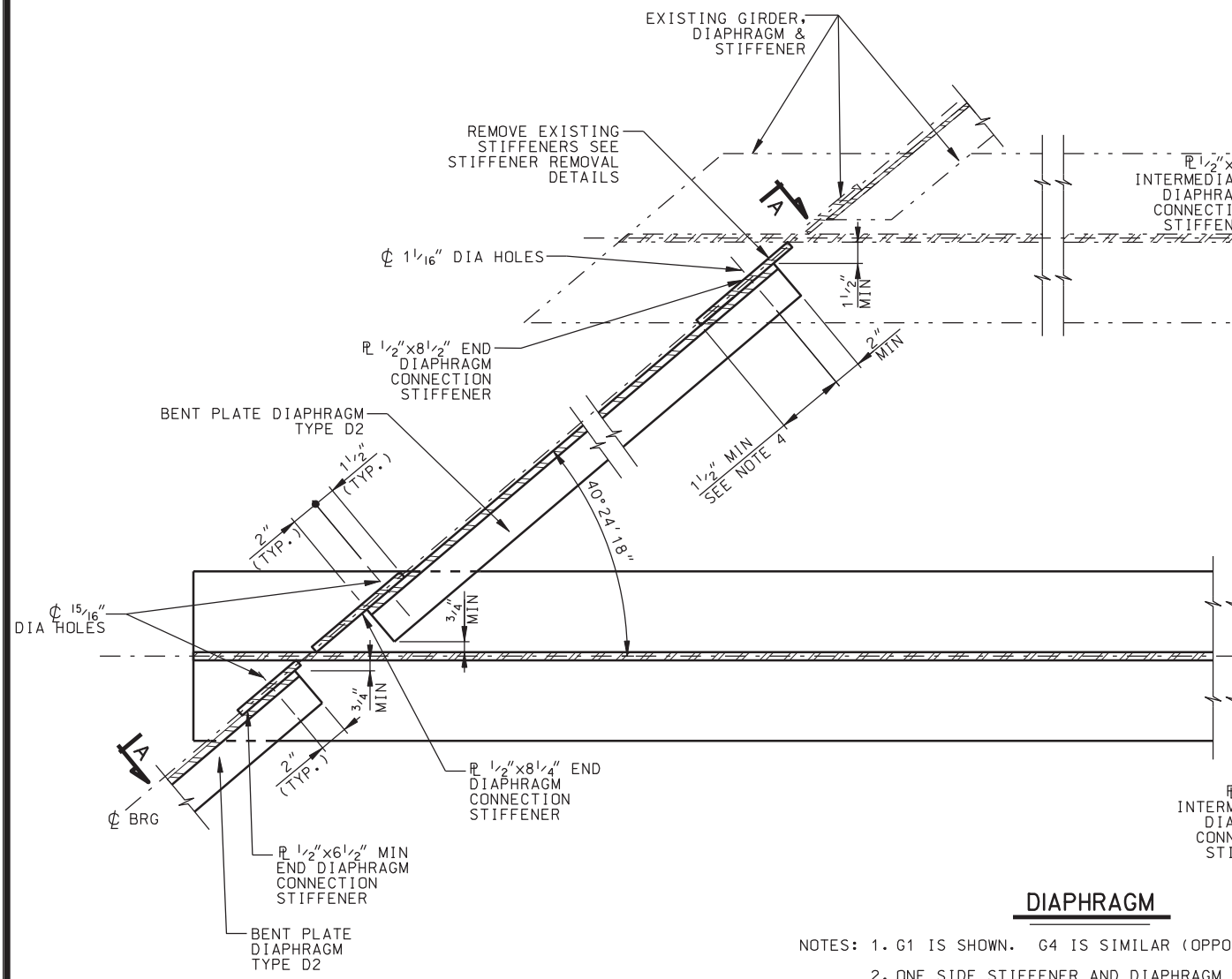


## DIAPHRAGM

NOTES: 1. G1 IS SHOWN. G4 IS SIMILAR (OPPO

2. ONE SIDE STIFFENER AND DIAPHRAGM REQUIRED FOR G2 AND G3.

3. BEARING STIFFENERS REQUIRED BOTH

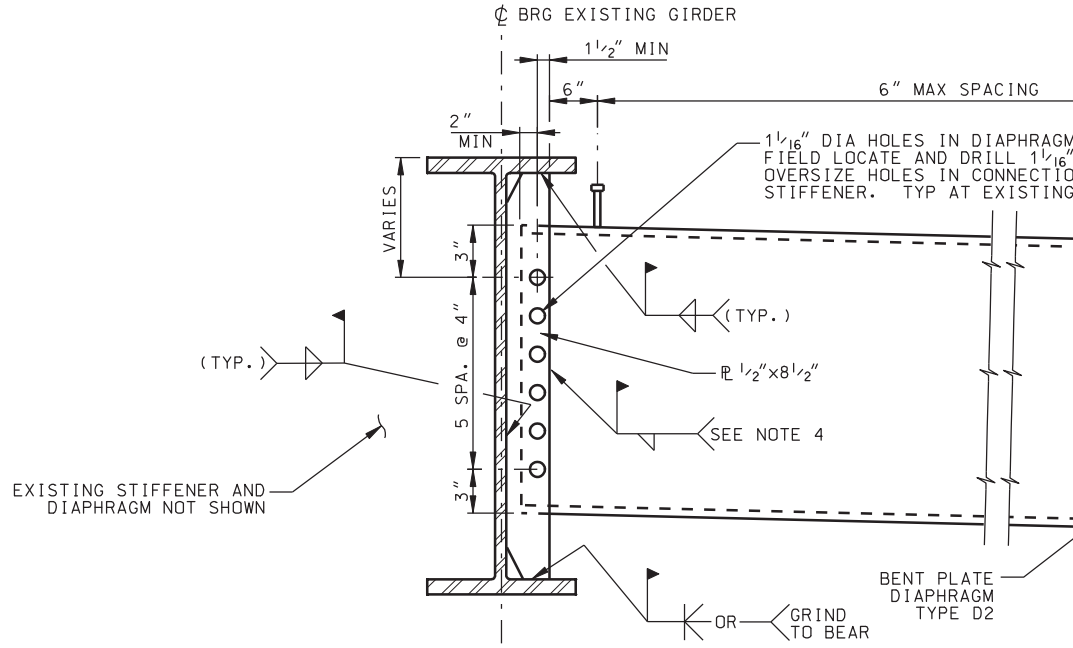


## SECTION A-A

(DIAPHRAGM D2)

DGN File:IP_PWPcdns1717\4433_C-353_13_STEEL01.dgn

02-MAY-2005

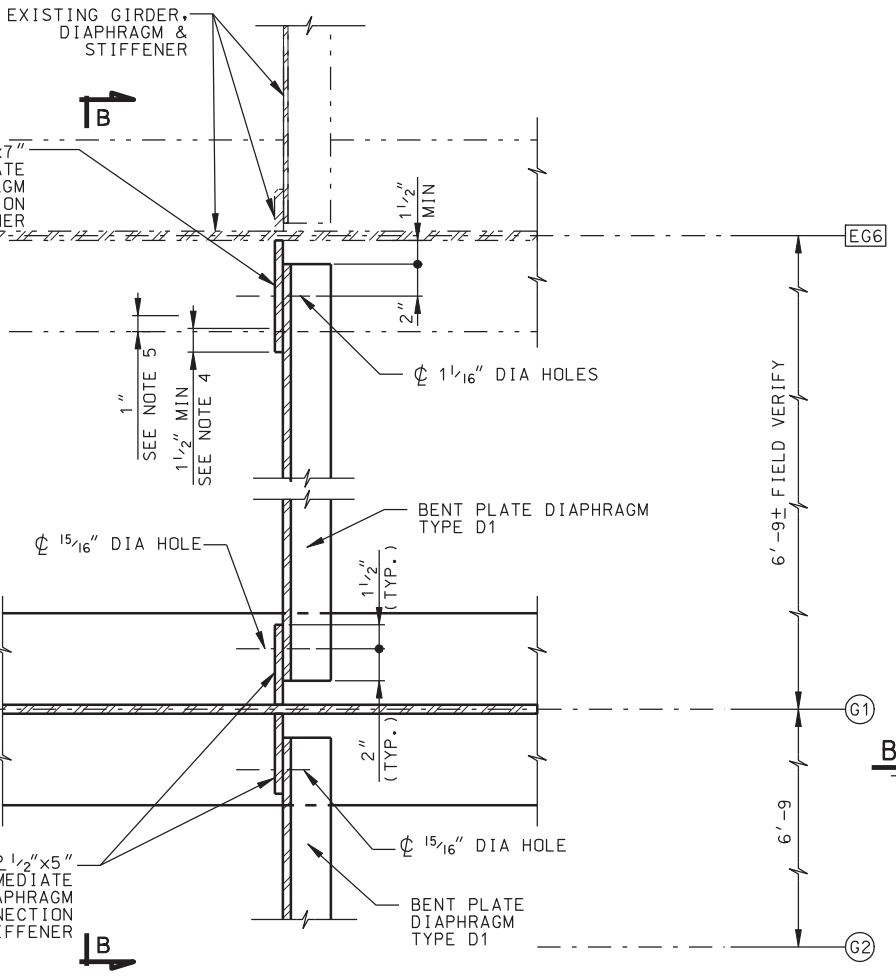


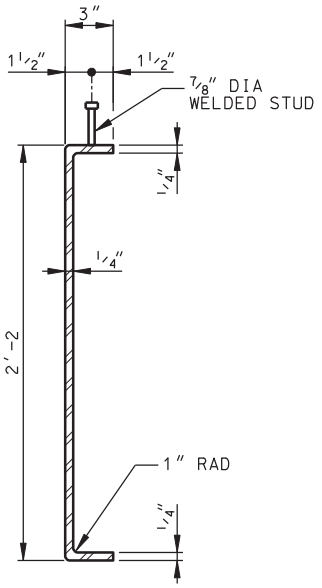


## BENT PLATE DIAPHRAGM D2 DETAIL

SITE HAND).

ARE

SIDES.

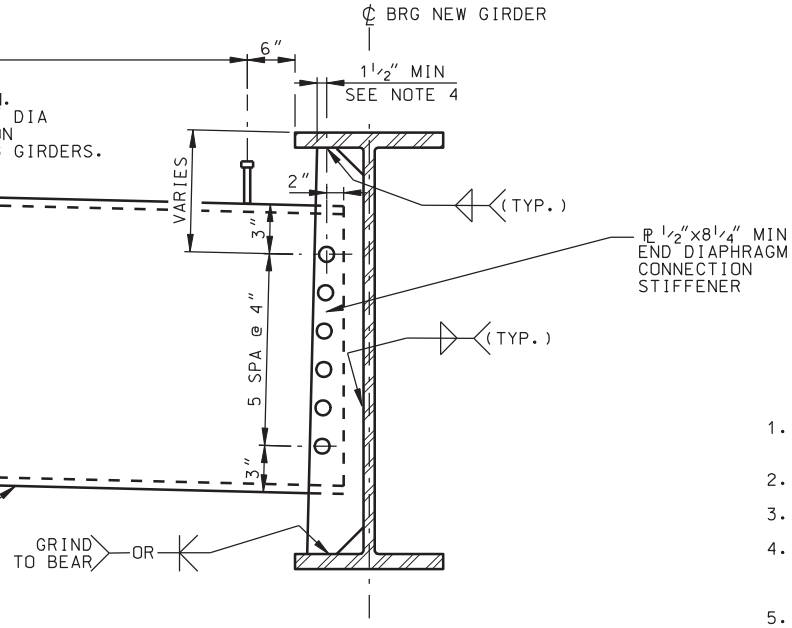


## NOTES

1. SEE "FRAMING PLAN" SHEET FOR INTERMEDIATE DIAPHRAGM LOCATIONS.
2. SEE "GIRDER DETAILS" SHEET FOR GENERAL NOTES.
3. SEE "DIAPHRAGM DETAILS 2" SHEET FOR SECTION B-B.
4. IF THE EDGE DISTANCE EXCEEDS 2", FIELD WELD THE STIFFENER EDGE TO THE DIAPHRAGM AFTER THE DECK SLAB CLOSURE POUR IS IN PLACE.
5. STOP FILLET WELDS CONNECTING STIFFENERS TO FLANGES 1" FROM EDGE OF FLANGE.
6. SEE SHEET 14 FOR STIFFENER REMOVAL DETAILS.

| NO. | DATE | BY | REMARKS |
|---|---|---|---|

REVISIONS

UTAH DEPARTMENT OF TRANSPORTATION
SALT LAKE CITY, UTAH
STRUCTURES DIVISION

HORROCKS ENGINEERS

| | | |
|---|---|---|
| DESIGN LRR 09/04 | CHECK MAD 09/04 | |
| DRAWN DKJ 09/04 | CHECK LRR 09/04 | |
| QUANT. RSH 01/05 | CHECK NBD 01/05 | |

APPROVAL RECOMM. DATE SENIOR DESIGN ENGR.

APPROVED FOR USE BY UDOT DATE UDOT BRIDGE ENGR.

I-15; CORRIDOR IN UTAH COUNTY
I-15 1600 NORTH OVERPASS IN OREM
DIAPHRAGM DETAILS 1

PROJECT NUMBER SP-15-6(52)241

UTAH
COUNTY

C-353W
DRG. NO.

SHT. 13 OF 25

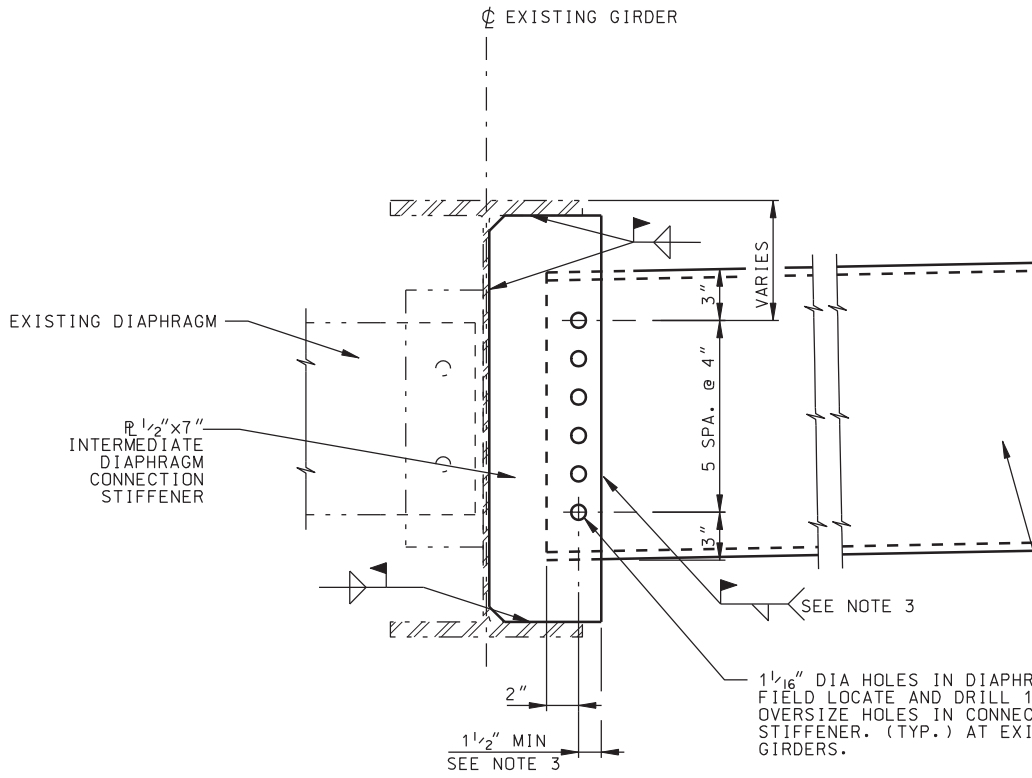


SECTION B-

(DIAPHRAGM D

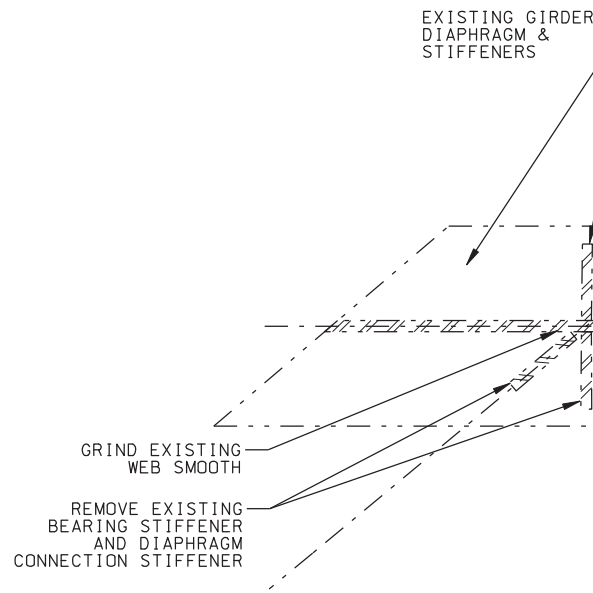


STIFFENER REMOVAL

DGN File:IP_PWPcdns1717\4433_C-353_14_STEEL02.dgn
02-MAY-2005

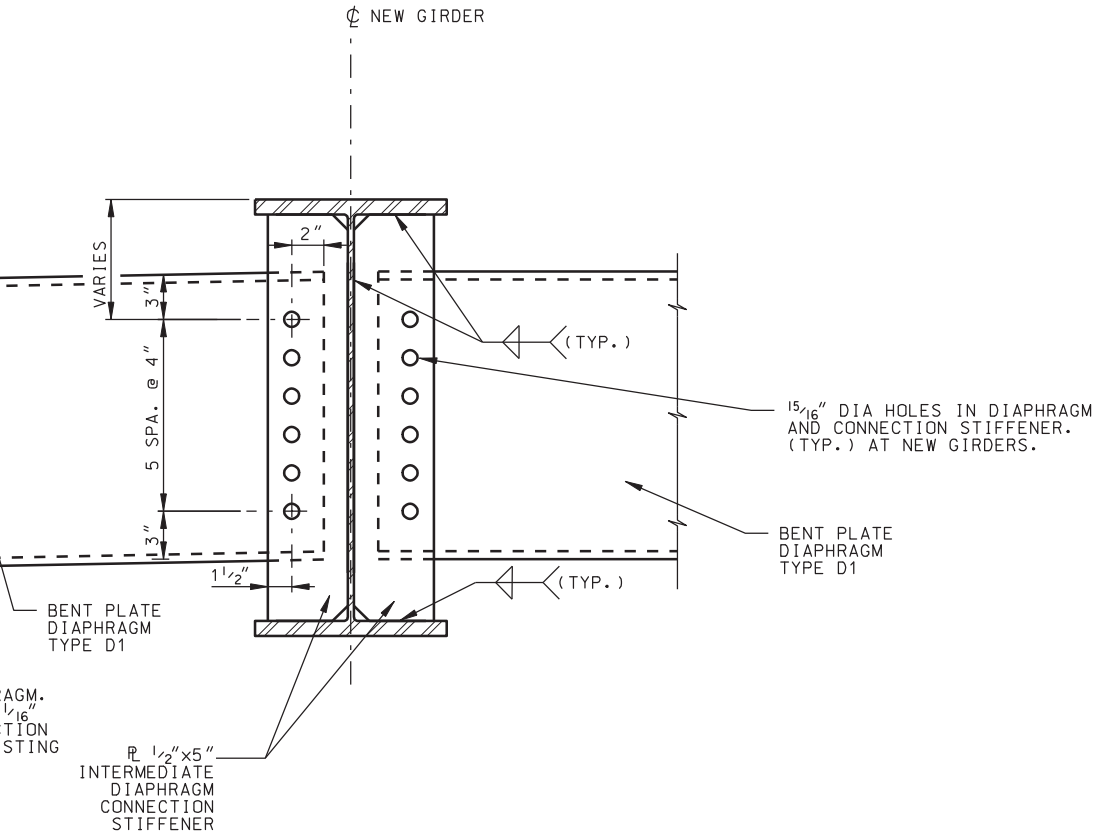


-B
1)

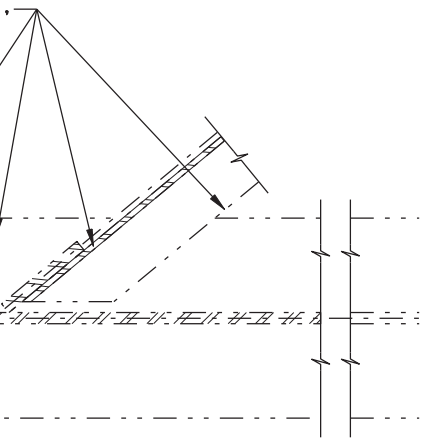

DETAILS

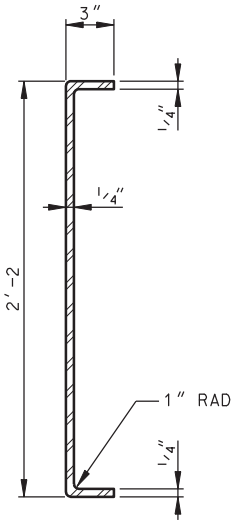


BENT PLATE DIAPHRAGM DI DETAIL

## NOTES

1. SEE "FRAMING PLAN" SHEET FOR INTERMEDIATE DIAPHRAGM LOCATIONS.
2. SEE "GIRDER DETAILS" SHEET FOR GENERAL NOTES.
3. IF THE EDGE DISTANCE EXCEEDS 2", FIELD WELD THE STIFFENER EDGE TO DIAPHRAGM AFTER THE DECK SLAB CLOSURE POUR IS IN PLACE.

| NO. | DATE | BY | REMARKS |
|---|---|---|---|

REVISIONS

UTAH DEPARTMENT OF TRANSPORTATION
SALT LAKE CITY, UTAH
STRUCTURES DIVISION
HORROCKS ENGINEERS

| | | |
|---|---|---|
| DESIGN LRR 09/04 | CHECK MAD 09/04 | |
| DRAWN DKJ 09/04 | CHECK LRR 09/04 | |
| QUANT. RSH 01/05 | CHECK NBD 01/05 | |

APPROVAL RECOMM. ____ DATE ____ SENIOR DESIGN ENGR.
APPROVED FOR USE BY UDOT ____ DATE ____ UDOT BRIDGE ENGR.

I-15; CORRIDOR IN UTAH COUNTY
I-15 1600 NORTH OVERPASS IN OREM
DIAPHRAGM DETAILS 2
PROJECT NUMBER SP-15-6(52)241

UTAH
COUNTY

C-353W
DRG. NO.

SHT. 14 OF 25

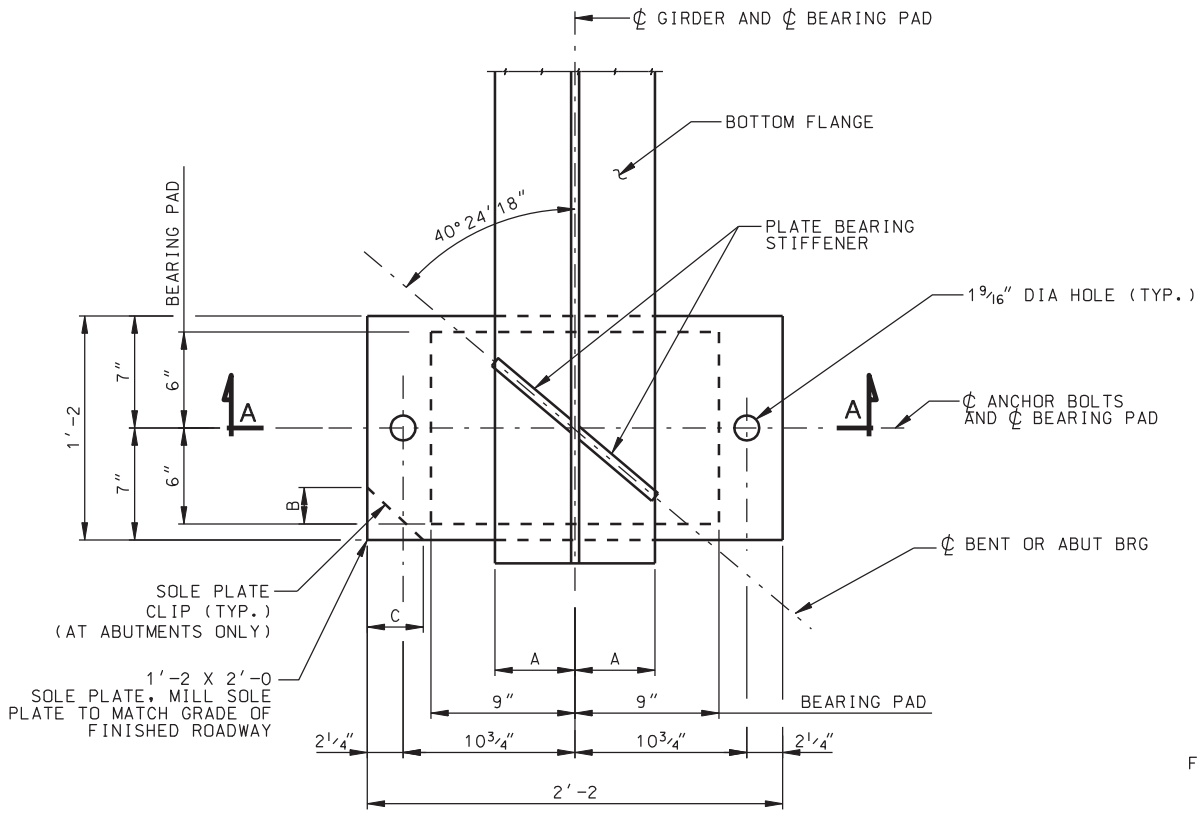


## PLAN

| BEARING | | |
|---|---|---|
| | NO. BRG | |
| ABUT #1 | 4 | |
| BENT #2 | 8 | 6" |
| BENT #3 | 8 | 6" |
| ABUT #4 | 4 | |

FINISH
RUB

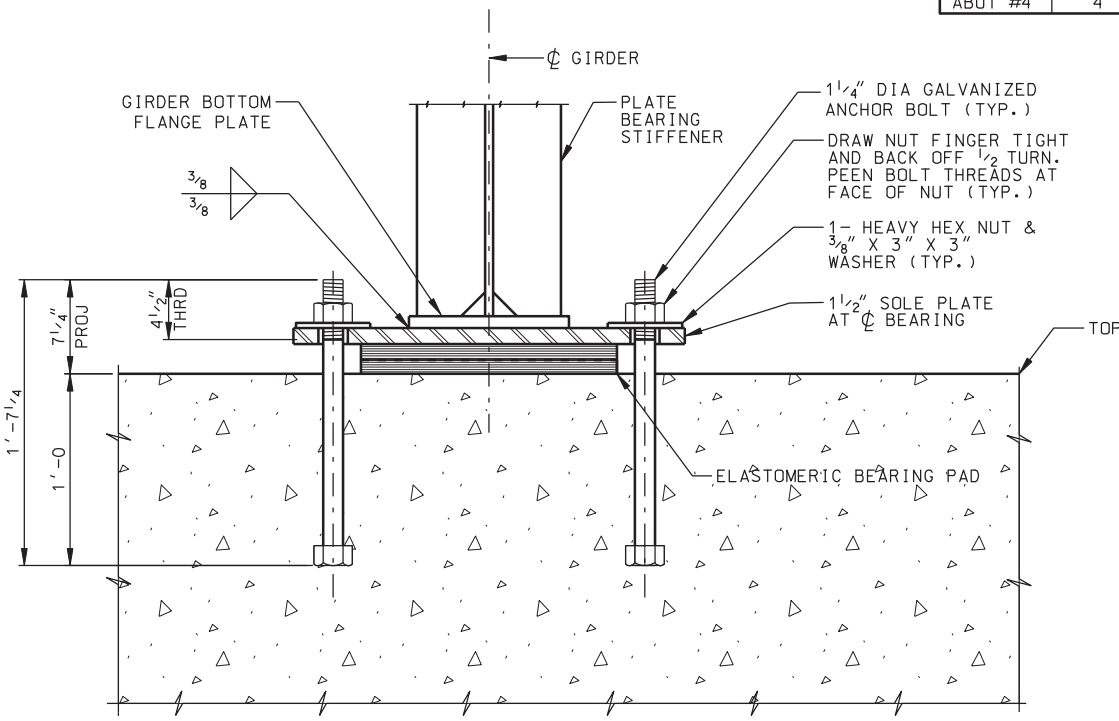


## SECTION A-A

DGN File:IP_PWPcdnsl717\4433_C-353_15_BRNG01.dgn

02-MAY-2005

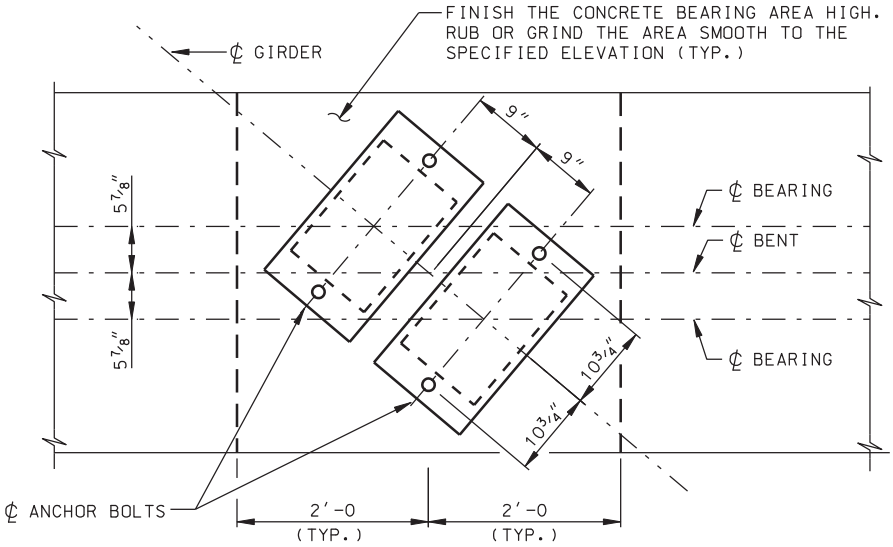


## ANCHOR BOLT LOCATION DIAGRAM (BENT)

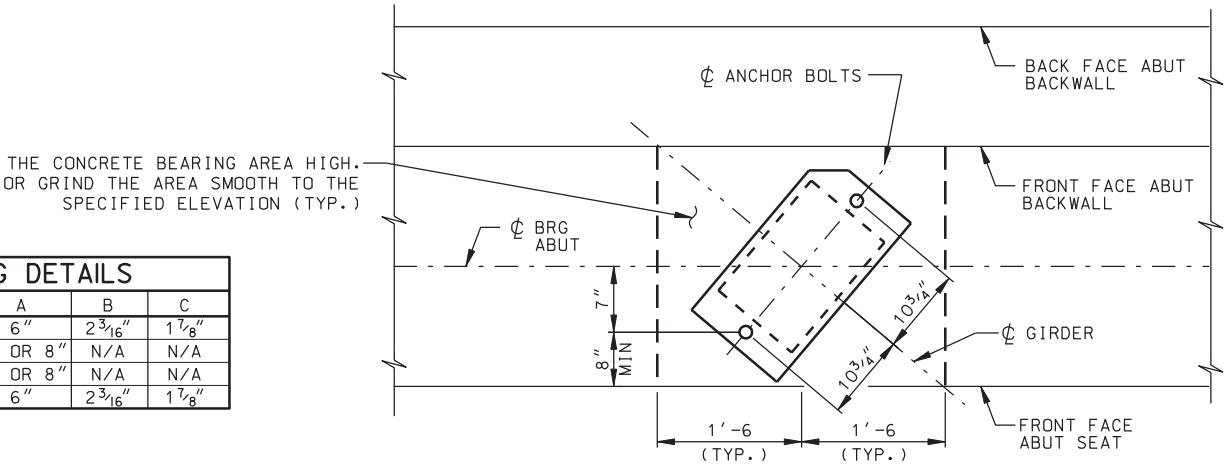


| G DETAILS | | |
|---|---|---|
| A | B | C |
| 6" | 2 3/16" | 1 7/8" |
| OR 8" | N/A | N/A |
| OR 8" | N/A | N/A |
| 6" | 2 3/16" | 1 7/8" |

## ANCHOR BOLT LOCATION DIAGRAM (ABUTMENT)

BEARING SEAT

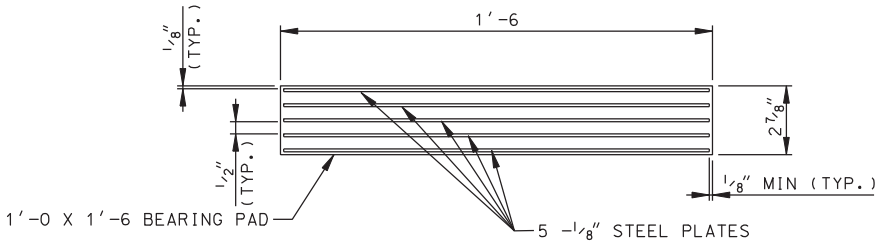


## BEARING PAD DETAIL

## NOTES

1. PAYMENT FOR ANCHOR BOLT AND BEARING ASSEMBLIES SHALL BE INCLUDED IN THE CONTRACT PRICE FOR STRUCTURAL STEEL.
2. ELASTOMER FOR BEARING PADS HARDNESS 50.
3. USE ASTM F-1554 GRADE 55 ANCHOR BOLTS.
4. GALVANIZE NUTS, WASHERS, AND ANCHOR BOLTS IN ACCORDANCE WITH AASHTO M232 (ASTM A153). ALL GALVANIZED STEEL THREADS ARE TO BE FREE FROM DEFECTS ALLOWING NUTS TO BE FREE RUNNING BY HAND FOR THE ENTIRE LENGTH OF THREADS.
5. FILL ANCHOR BOLT SOLE PLATE HOLES WITH SILICONE JOINT SEALER.
6. SOLE PLATES SHALL BE BEVELED TO MATCH GRADE OF FINISHED ROADWAY.

| NO. | DATE | BY | REMARKS |
|---|---|---|---|
| | | | |

REVISIONS

UTAH DEPARTMENT OF TRANSPORTATION
SALT LAKE CITY, UTAH
STRUCTURES DIVISION
HORROCKS ENGINEERS

DESIGN RSH 09/04 CHECK MAD 09/04
DRAWN DKJ 09/04 CHECK LRR 09/04
QUANT. RSH 01/05 CHECK NBD 01/05

APPROVAL RECOMM. DATE SENIOR DESIGN ENGR.
APPROVED FOR USE BY UDOT DATE UDOT BRIDGE ENGR.

I-15; CORRIDOR IN UTAH COUNTY
I-15 1600 NORTH OVERPASS IN OREM
BEARING DETAILS
PROJECT NUMBER SP-15-6(52)241

UTAH
COUNTY

C-353W
DRG. NO.

SHT. 15 OF 25

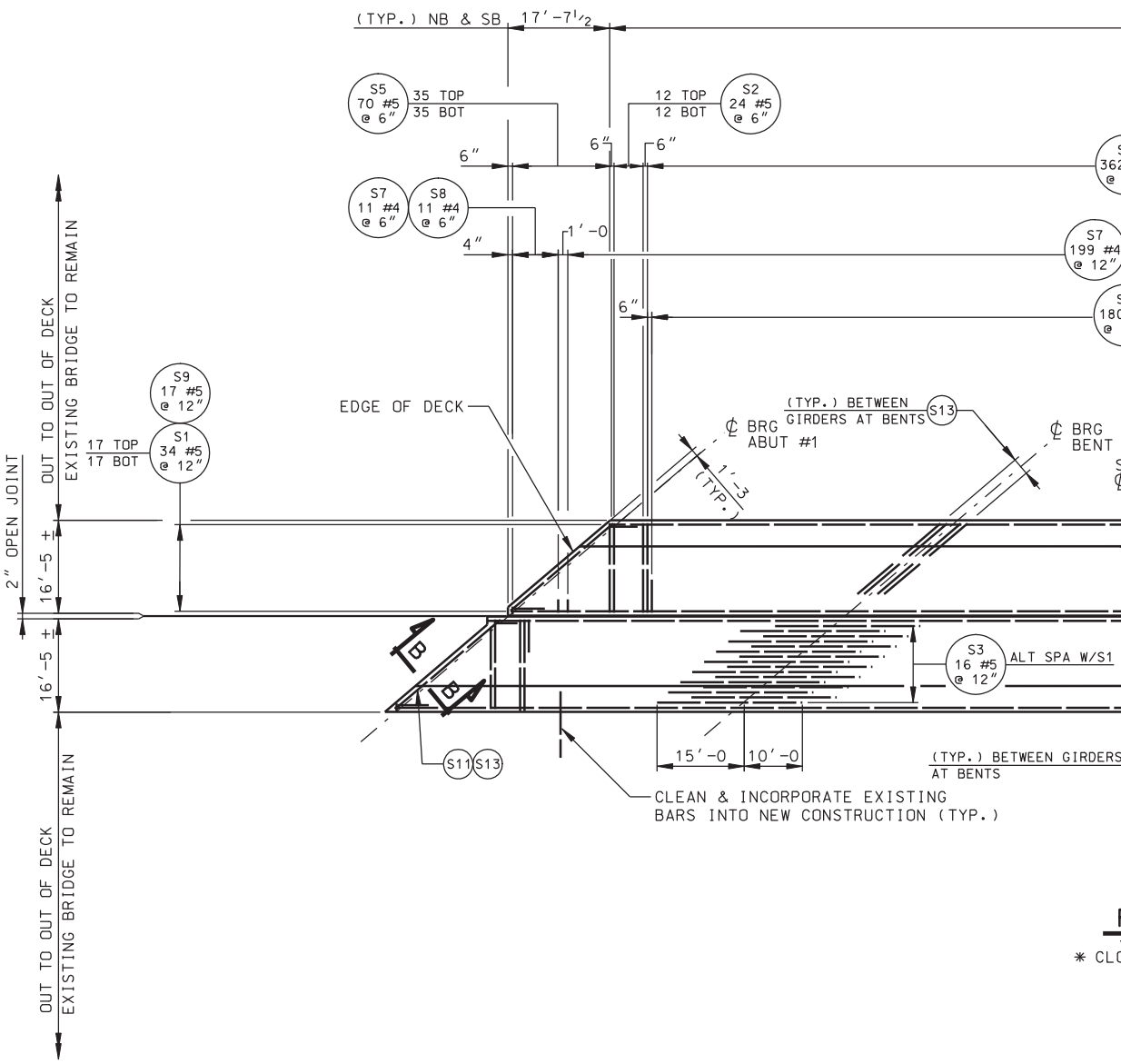


* CLO

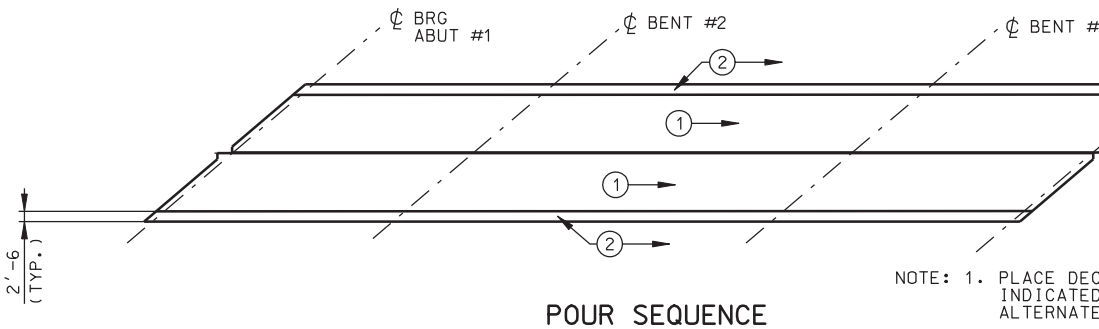


## POUR SEQUENCE

(1) SEQUENCE NUMBER

NOTE: 1. PLACE DEC
INDICATED
ALTERNATE

2. ARROW IND

DGN File:IP_PWPcdms1717\4433_C-353.16_DCKSLB01.dgn
02-MAY-2005

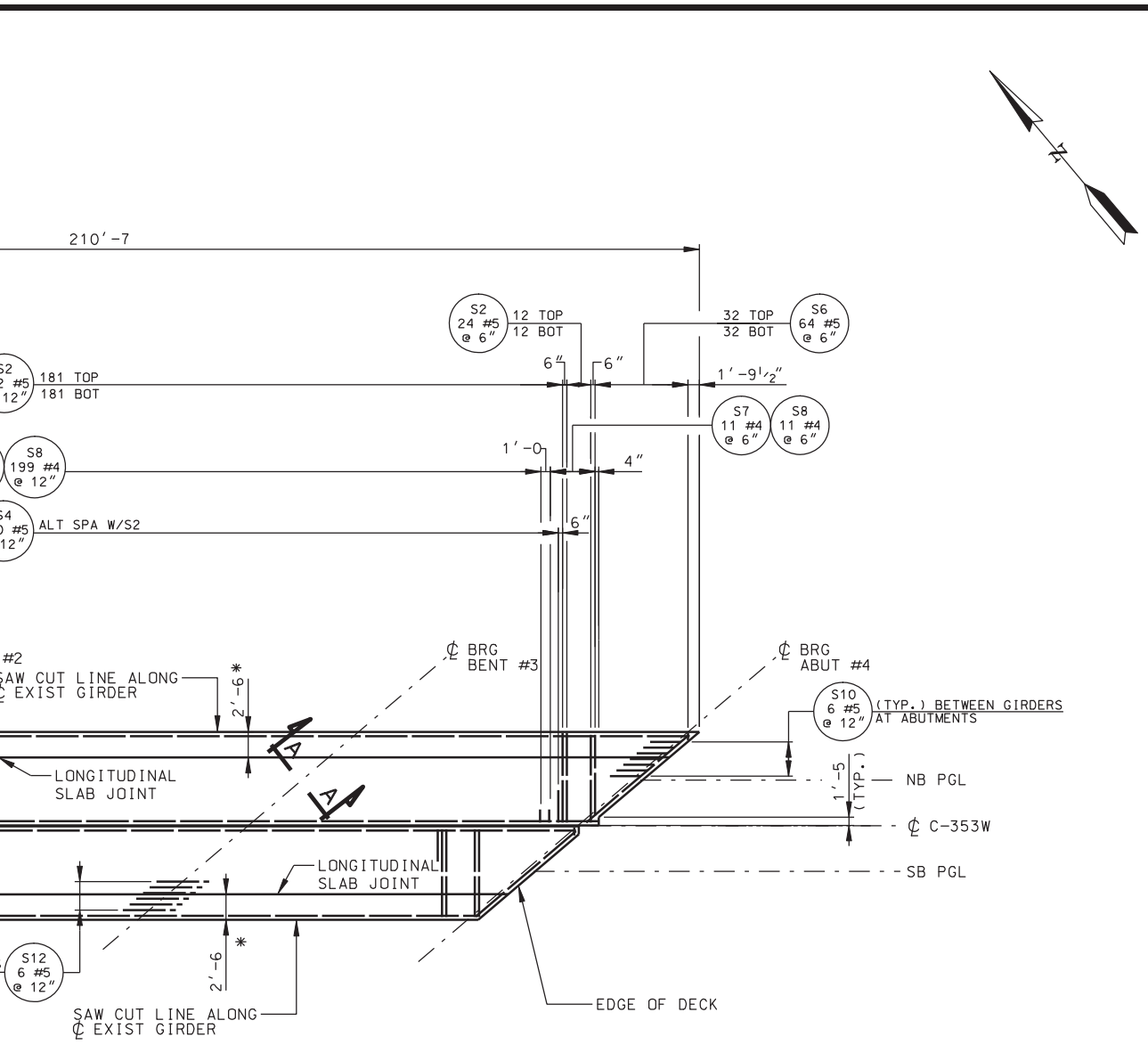


PLAN

OSURE POUR

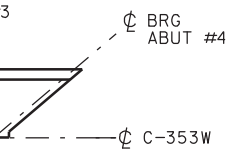


CK IN SECTIONS AND SEQUENCE
. CONTRACTOR MAY SUBMIT
PROCEDURES FOR APPROVAL.

DICATES DIRECTION OF PLACEMENT.

## NOTES

1. SEE "DECK SECTIONS" FOR ADDITIONAL REINFORCEMENT.
2. SEE "PARAPET DETAILS" FOR PARAPET REINFORCEMENT.
3. MINIMUM LAP LENGTH FOR (S1) BARS: #5 BAR 2'-6. STAGGER SPLICES SUCH THAT NO MORE THAN 50% OF (S1) BARS ARE SPLICED AT A GIVEN LOCATION (TAKEN NORMAL TO ℄ C-353W).
4. STAY IN PLACE FORMS SHALL NOT BE USED IN DECK PLACEMENT.

| QUANTITIES STRUCTURAL CONCRETE | |
|---|---|
| DECK NB & SB | 186.9 CY |

| NO. | DATE | BY | REMARKS |
|---|---|---|---|
| | | | |

REVISIONS

UTAH DEPARTMENT OF TRANSPORTATION
SALT LAKE CITY, UTAH
STRUCTURES DIVISION
HORROCKS ENGINEERS

DESIGN RSH 09/04 CHECK MAD 09/04
DRAWN DKJ 09/04 CHECK LRR 09/04
QUANT. RSH 01/05 CHECK NBD 01/05

APPROVAL RECOMM. DATE SENIOR DESIGN ENGR.
APPROVED FOR USE BY UDOT DATE UDOT BRIDGE ENGR.

I-15; CORRIDOR IN UTAH COUNTY
I-15 1600 NORTH OVERPASS IN OREM
DECK SLAB PLAN
PROJECT NUMBER SP-15-6(52)241

UTAH
COUNTY

C-353W
DRG. NO.

SHT. 16 OF 25

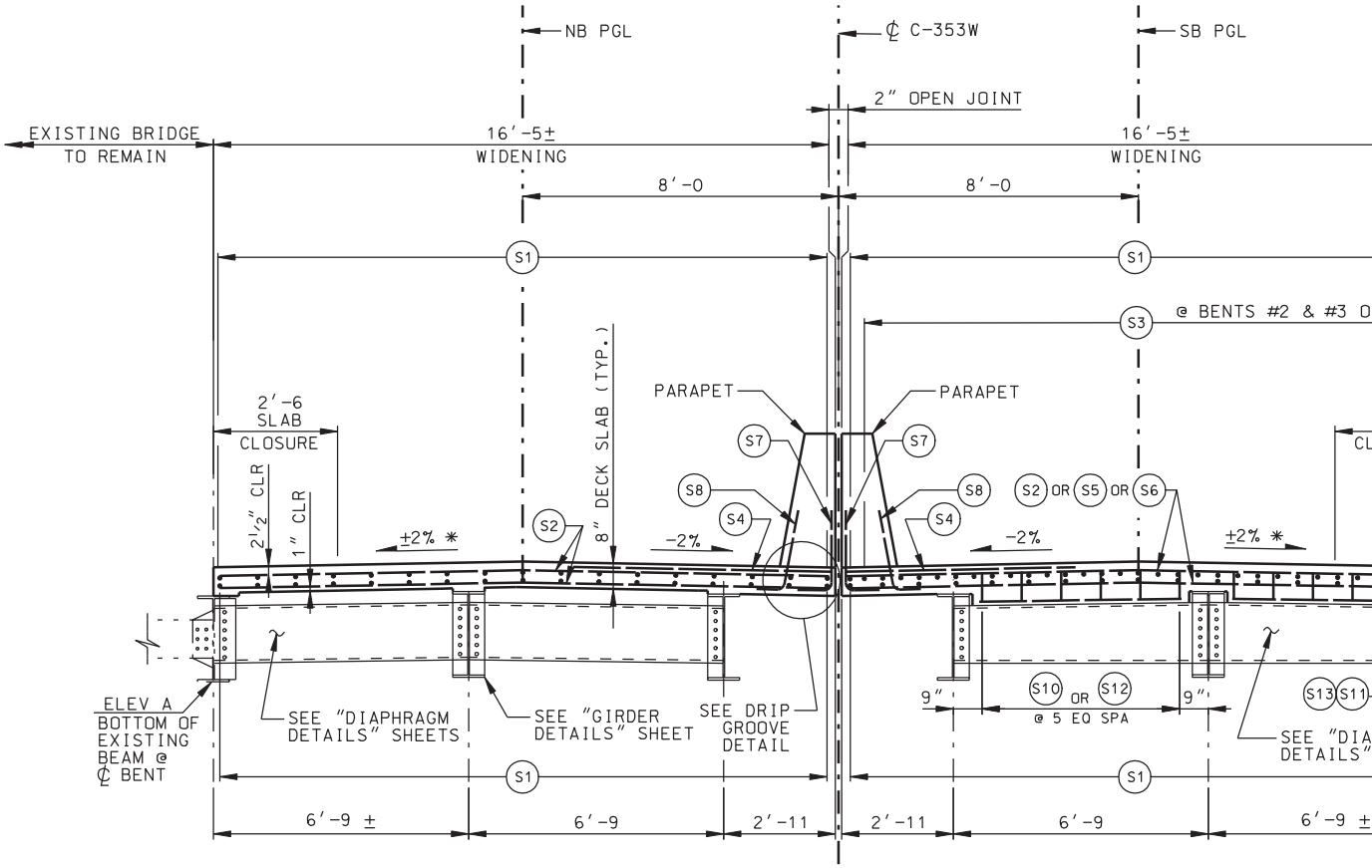


## TYPICAL CROSS SECTION

* MATCH EXISTING CROSS SLOPE

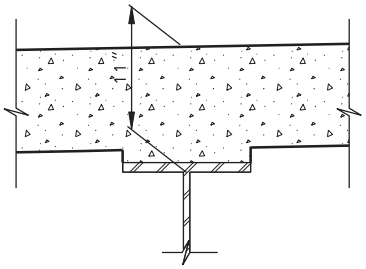

## FLANGE EMBEDMENT DETAIL

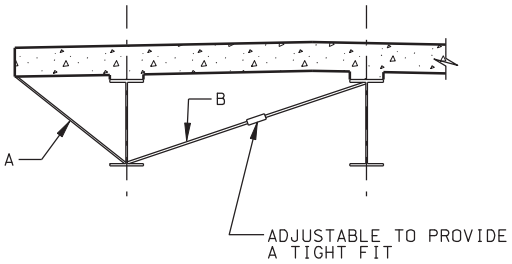


BRACE DECK OVERHANGS DURING PLACEMENT OF DECK AS SHOWN. ENSURE THAT MEMBER "B" IS CAPABLE OF DEVELOPING THE FORCES INDUCED BY MEMBER "A". SHOP DRAWINGS ARE REQUIRED.

## SECTION AT SLAB OVERHANG

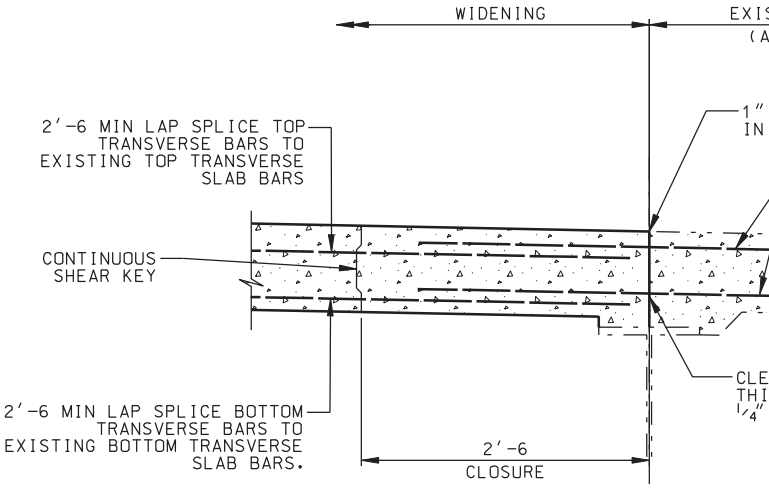


## SLAB CLOSURE

DGN File: IP_PWPcdms1717\4433_C-353_17_DECK01.dgn

02-MAY-2005

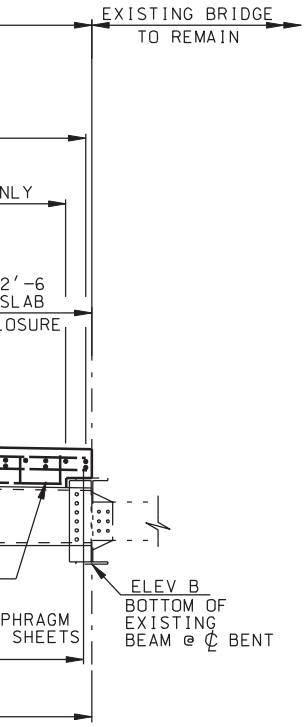


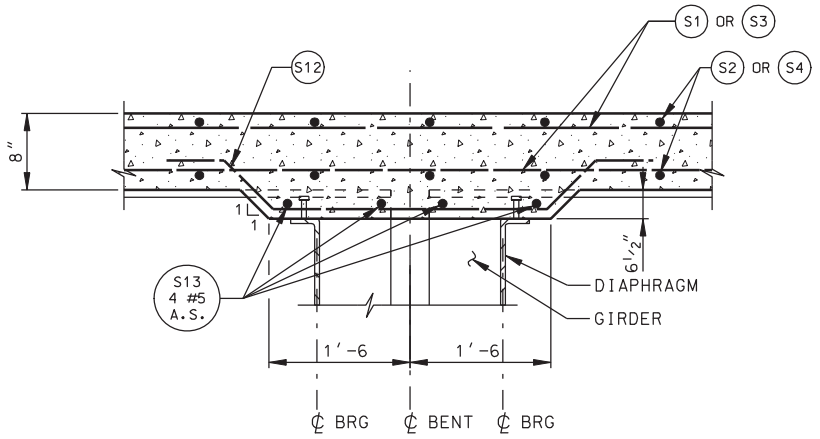


## SECTION A-A

BENTS #2 & #3

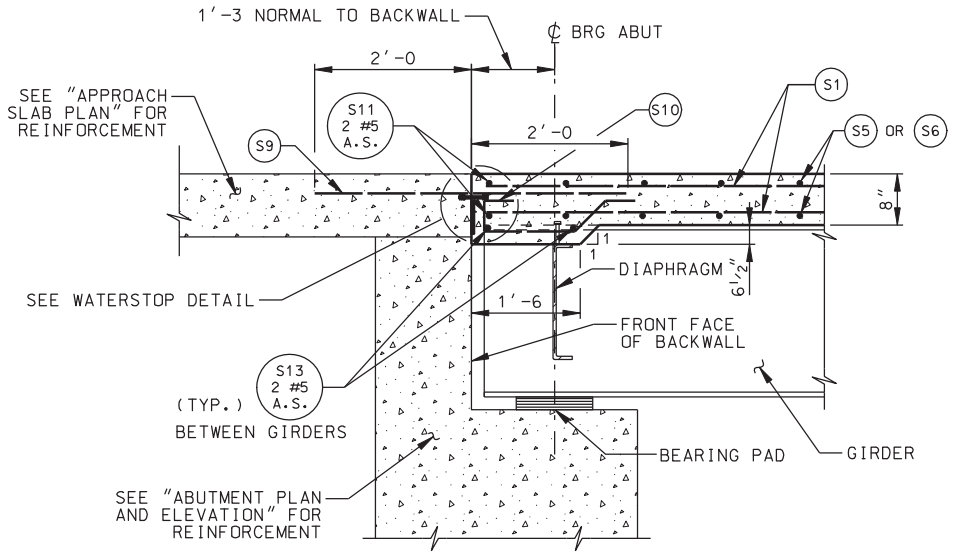


## SECTION B-B

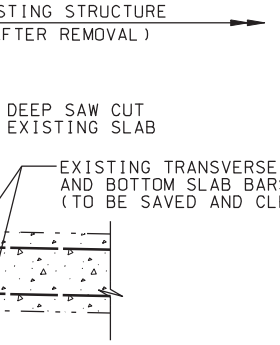


AN AND ROUGHEN
S SURFACE,
AMPLITUDE

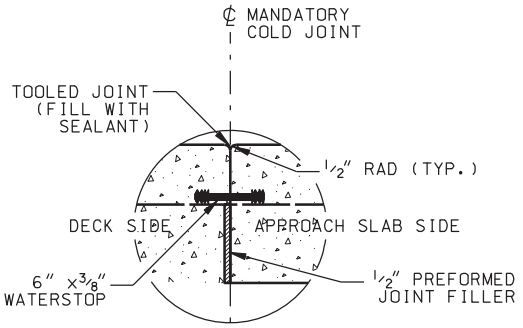


## WATERSTOP DETAIL

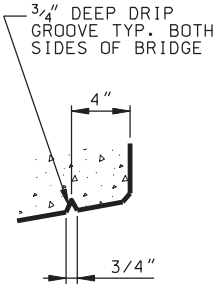


## DRIP GROOVE DETAIL

| TABULATED ELEVATIONS | | |
|---|---|---|
| | ELEV A | ELEV B |
| BENT #2 | 4532.74 | 4532.00 |
| BENT #3 | 4534.47 | 4533.72 |

FIELD VERIFY THE EXISTING BOTTOM OF BEAM ELEVATIONS ADJACENT TO THE WIDENED PORTIONS OF THE STRUCTURE. CONTACT THE ENGINEER IF THE DISCREPANCY BETWEEN THE SURVEYED AND DETAILED ELEVATIONS EXCEEDS 1". THE ELEVATIONS SHOWN ARE BASED ON SURVEYED ELEVATIONS AT THE NORTH (N) OR SOUTH (S) FACE OF THE BENT CAP.

| NO. | DATE | BY | REMARKS |
|---|---|---|---|
| | | | |

REVISIONS

UTAH DEPARTMENT OF TRANSPORTATION
SALT LAKE CITY, UTAH
STRUCTURES DIVISION
HORROCKS ENGINEERS

DESIGN RSH 09/04 CHECK MAD 09/04
DRAWN DKJ 09/04 CHECK LRR 09/04
QUANT. RSH 01/05 CHECK NBD 01/05

APPROVAL RECOMM. DATE SENIOR DESIGN ENGR.
APPROVED FOR USE BY UDOT DATE UDOT BRIDGE ENGR.

I-15; CORRIDOR IN UTAH COUNTY
I-15 1600 NORTH OVERPASS IN OREM
DECK SECTIONS

PROJECT NUMBER SP-15-6(52)241

UTAH
COUNTY

C-353W
DRG. NO.

SHT. 17 OF 25

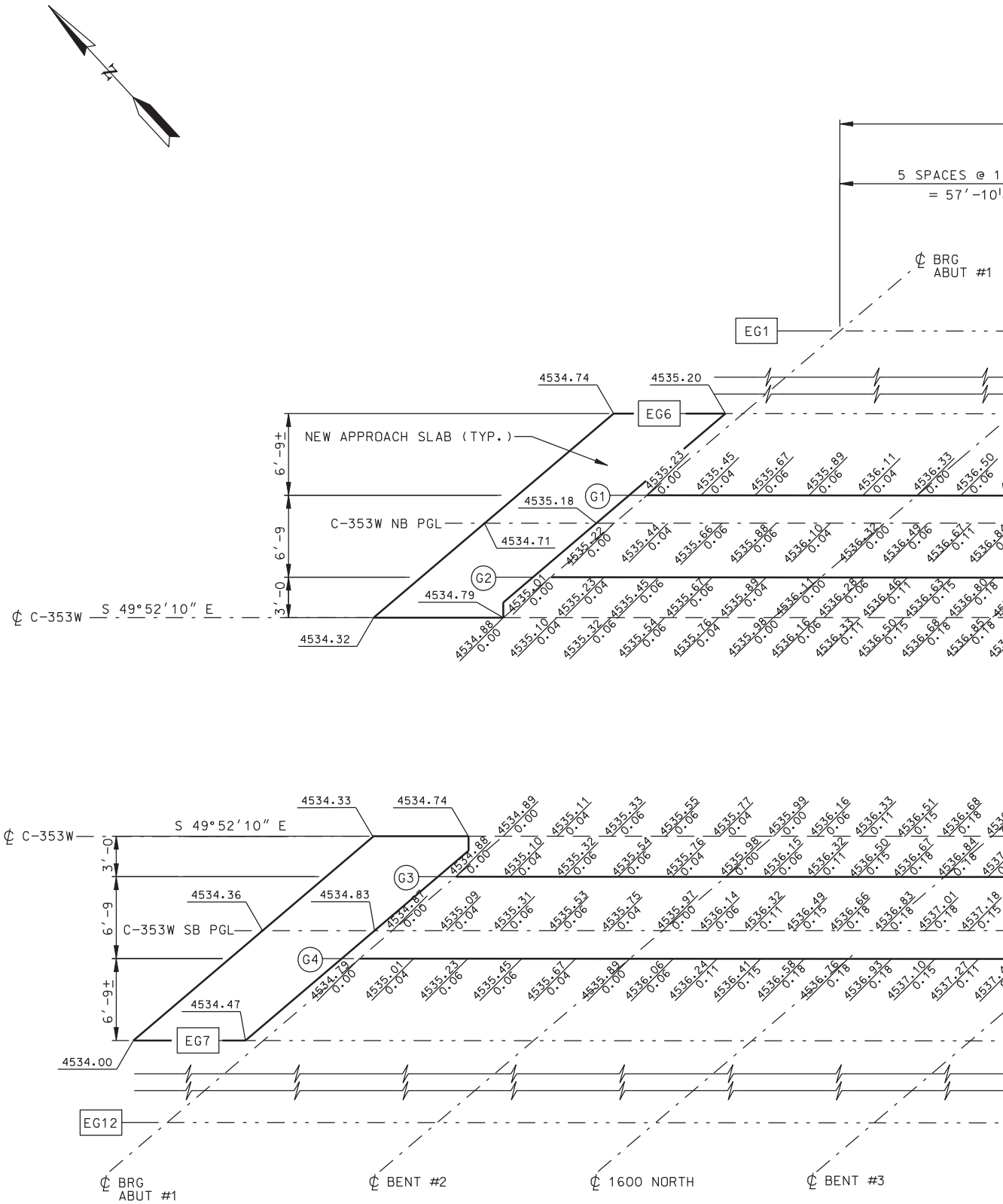


SCREED

DGN File:IP_PWPcdmsi1717\4433_C-353.18_SCREED01.dgn

02-MAY-2005

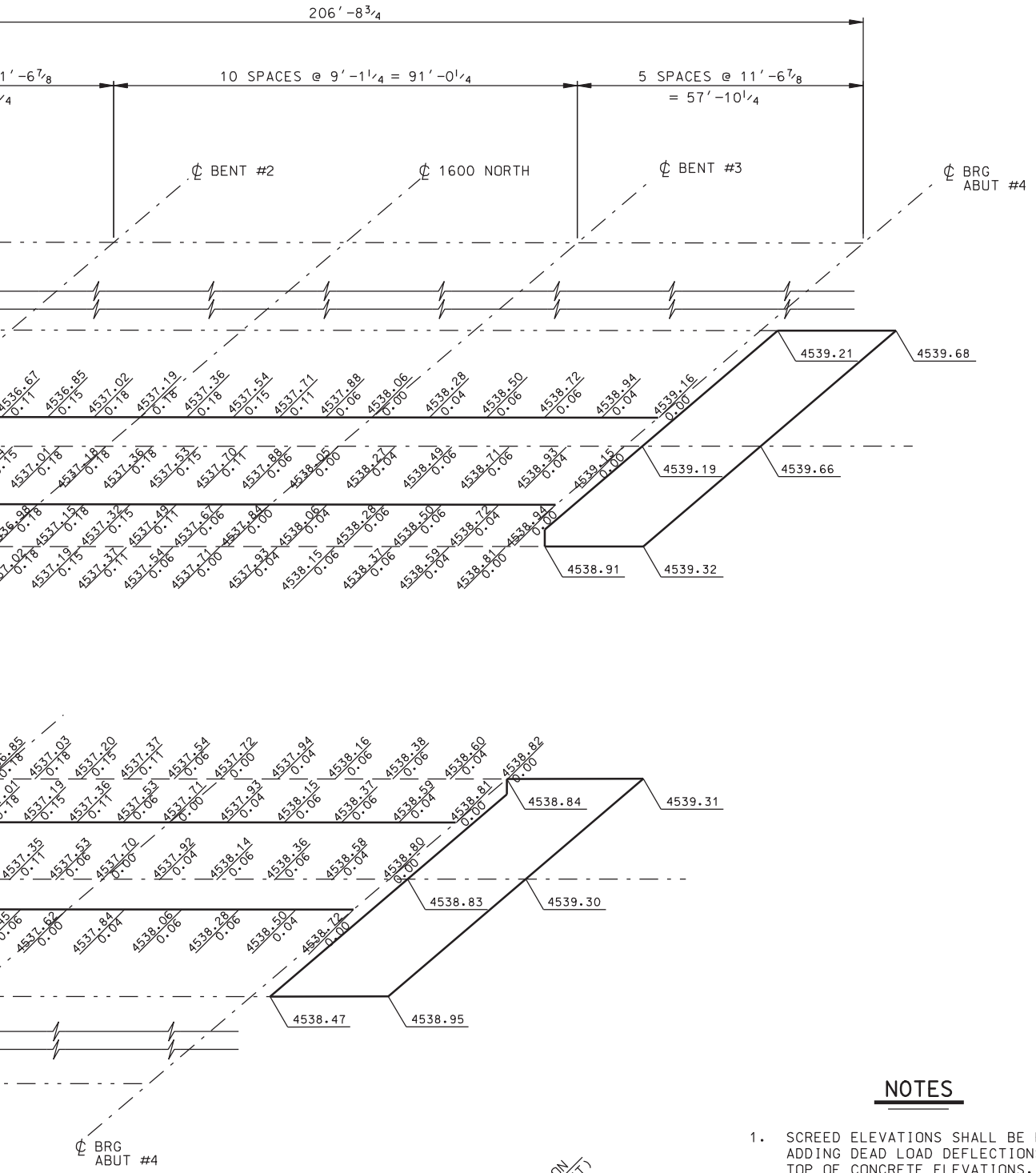


## ELEVATIONS

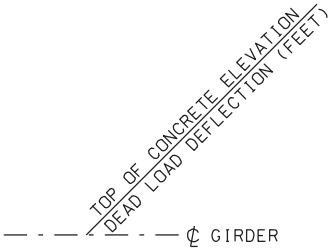


## KEY PLAN

## NOTES

1. SCREED ELEVATIONS SHALL BE FOUND BY ADDING DEAD LOAD DEFLECTIONS TO TOP OF CONCRETE ELEVATIONS.
2. ALL ELEVATIONS ARE TOP OF CONCRETE.
3. ALL LONGITUDINAL DIMENSIONS ARE TYPICAL ALONG ALL GIRDER LINES.
4. ALL NEW GIRDERS ARE PARALLEL TO S 49°52'10" E.
5. DIMENSION MAY VARY DUE TO EXISTING STRUCTURE DIMENSIONS. CONTRACTOR SHALL VERIFY ALL CONTROLLING DIMENSIONS PRIOR TO FABRICATION OF STEEL.

| NO. | DATE | BY | REMARKS |
|---|---|---|---|

REVISIONS

UTAH DEPARTMENT OF TRANSPORTATION
SALT LAKE CITY, UTAH
STRUCTURES DIVISION

HORROCKS ENGINEERS

DESIGN RSH 09/04 CHECK MAD 09/04
DRAWN DKJ 09/04 CHECK LRR 09/04
QUANT. RSH 01/05 CHECK NBD 01/05

APPROVAL RECOMM. DATE SENIOR DESIGN ENGR.
APPROVED FOR USE BY UDOT DATE UDOT BRIDGE ENGR.

I-15; CORRIDOR IN UTAH COUNTY
I-15 1600 NORTH OVERPASS IN OREM
SCREED ELEVATIONS

PROJECT NUMBER SP-15-6(52)241

UTAH
COUNTY

C-353W
DRG. NO.

SHT. 18 OF 25

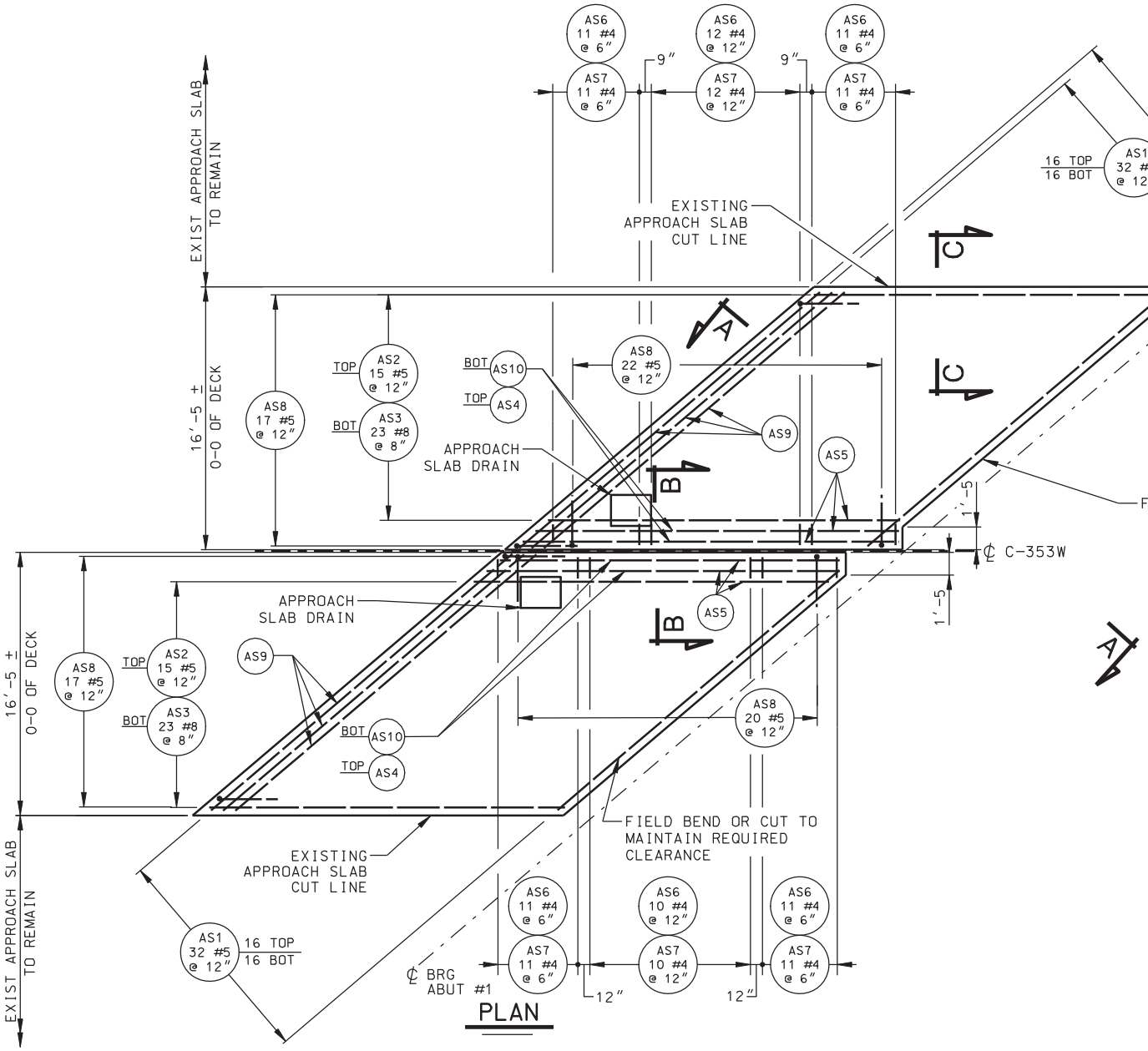


## PLAN

ABUT #1 APPROACH SLAB SHOWN, ABUT #4 SIMILAR

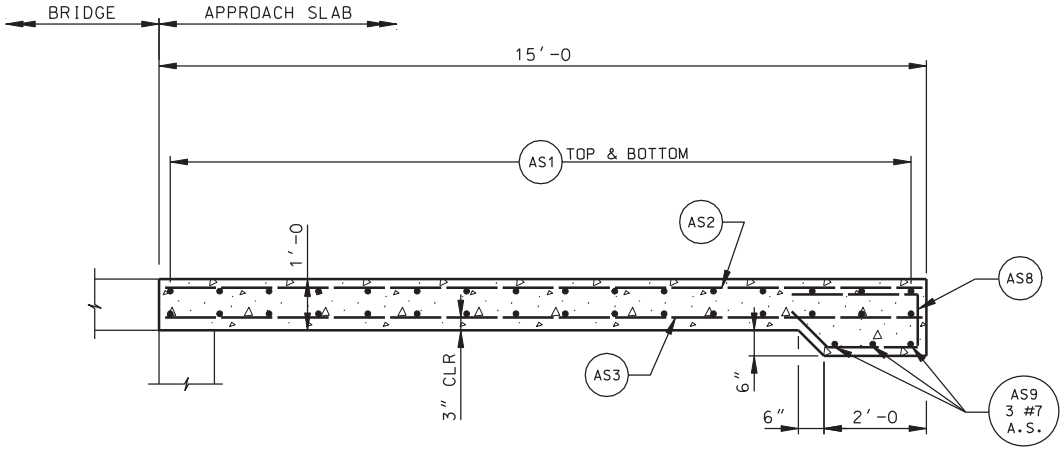


## SECTION A-A

1. SEE "APPROACH
2. CONTRACTOR TO UNLESS 1'-3 M
3. FOR LOCATION

DGN File: IP_PWPcdms1717\4433_C-353_19_APPSLB01.dgn

02-MAY-2005

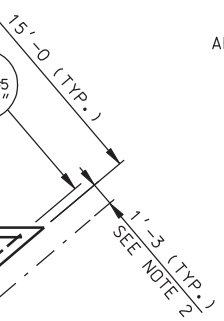


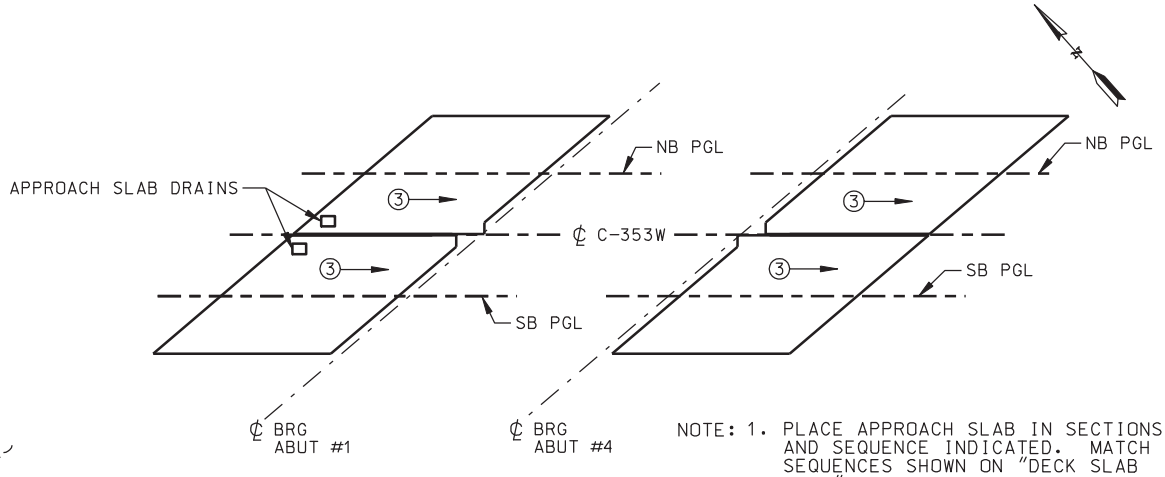


NOTE: 1. PLACE APPROACH SLAB IN SECTIONS AND SEQUENCE INDICATED. MATCH SEQUENCES SHOWN ON "DECK SLAB PLAN" SHEET.

2. ARROW INDICATES DIRECTION OF PLACEMENT.

## POUR SEQUENCE

③ SEQUENCE NUMBER

RONT FACE OF BACKWALL

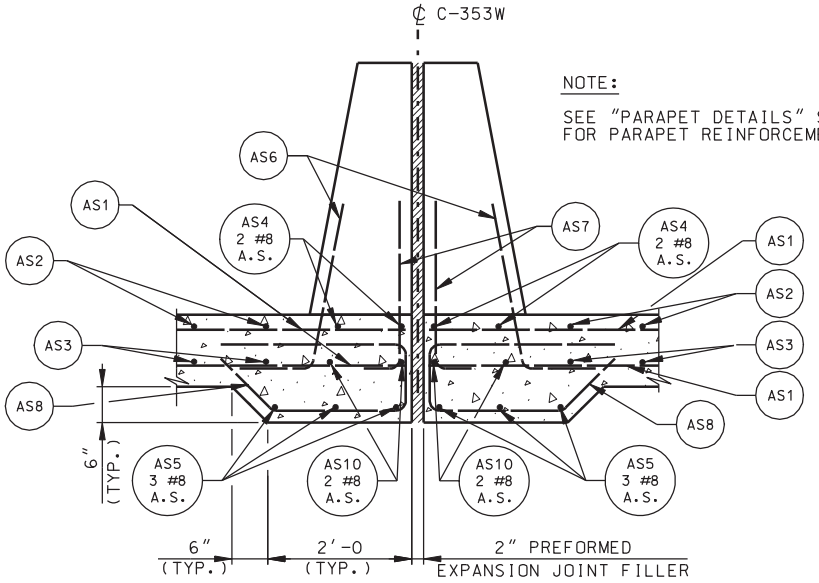


NOTE:

SEE "PARAPET DETAILS" SHEET FOR PARAPET REINFORCEMENT.

## SECTION B-B

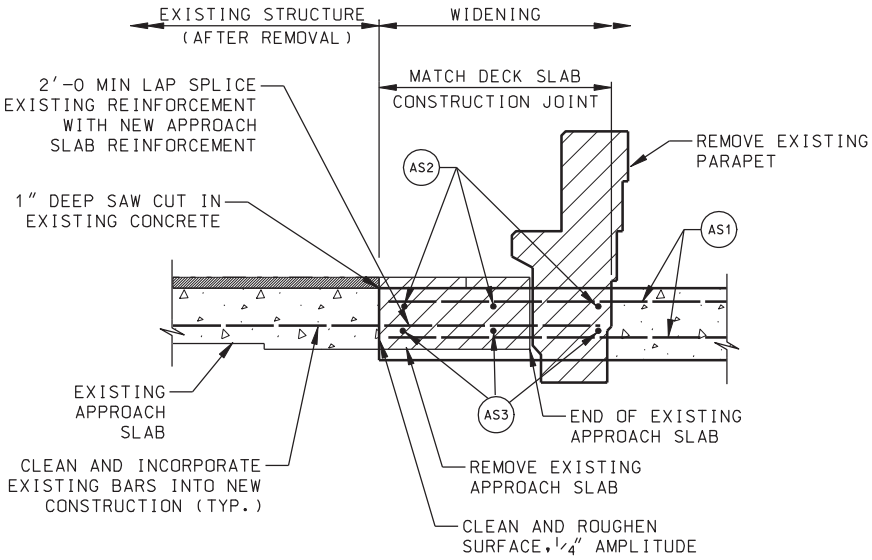


## SECTION C-C

## NOTES

SLAB DRAIN DETAILS"

MATCH EXISTING FRONT FACE OF BACKWALL
INIMUM CANNOT BE OBTAINED.

OF (S9) BARS SEE SHEET 17.

| QUANTITIES | |
|---|---|
| STRUCTURAL CONCRETE | |
| NB & SB APPROACH SLABS | 64.4 CY |

| NO. | DATE | BY | REMARKS |
|---|---|---|---|
| | | | |

REVISIONS

UTAH DEPARTMENT OF TRANSPORTATION
SALT LAKE CITY, UTAH
STRUCTURES DIVISION

HORROCKS ENGINEERS

DESIGN RSH 09/04 CHECK MAD 09/04
DRAWN DKJ 09/04 CHECK LRR 09/04
QUANT. RSH 01/05 CHECK NBD 01/05

APPROVAL RECOMM. DATE SENIOR DESIGN ENGR.
APPROVED FOR USE BY UDOT DATE UDOT BRIDGE ENGR.

I-15: CORRIDOR IN UTAH COUNTY
I-15 1600 NORTH OVERPASS IN OREM
APPROACH SLAB PLAN

PROJECT NUMBER SP-15-6(52)241

UTAH
COUNTY

C-353W
DRG. NO.

SHT. 19 OF 25

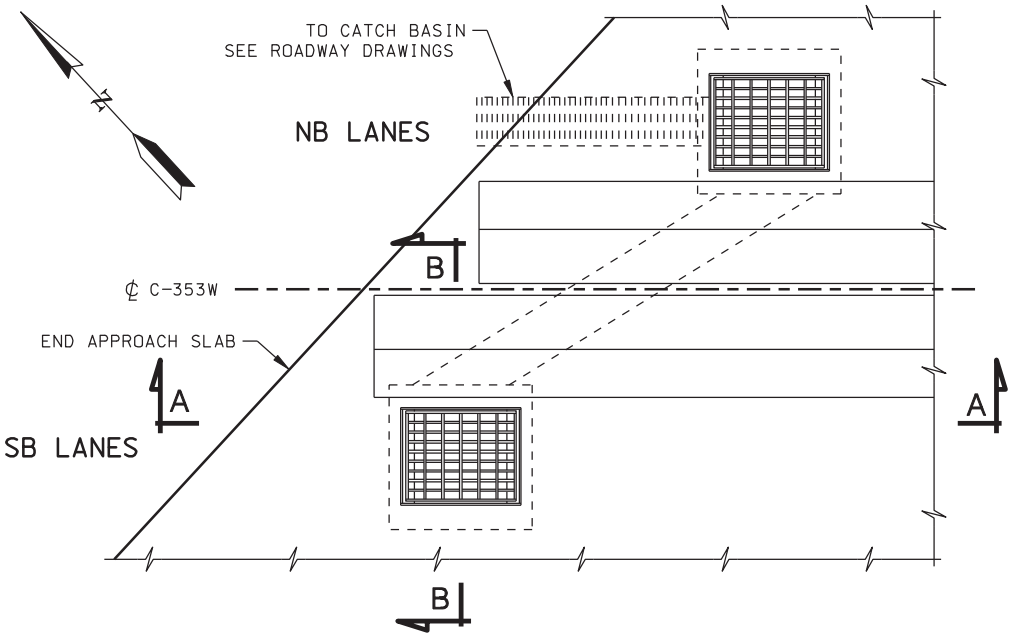


TYPICAL PLAN

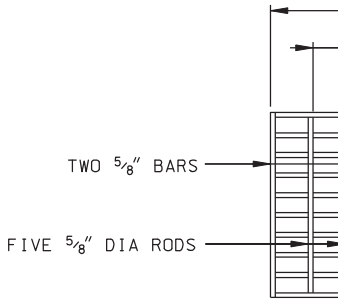


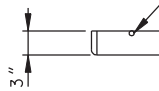


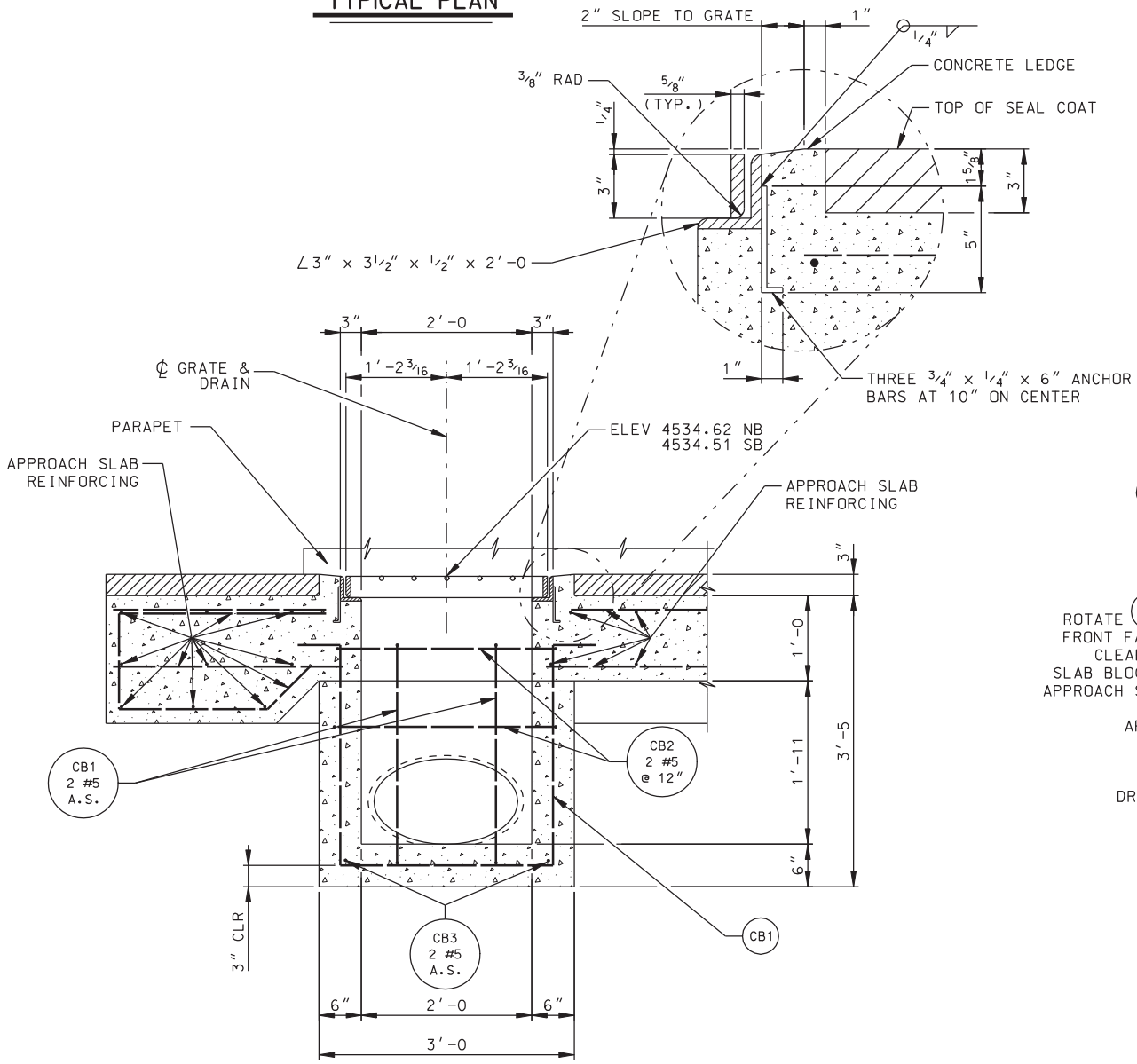


SECTION A-A

AS7

ROTATE AS6 BA
FRONT FACE 90
CLEAR APPR
SLAB BLOCK OUT
APPROACH SLAB D

APPROAC
REINF

SEE F
DRAWINGS

DGN File:IP_PWPcdms1717\4433_C-353_20_APPDRN01.dgn

02-MAY-2005

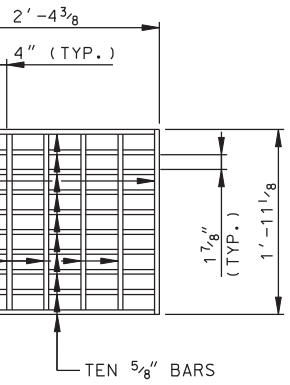


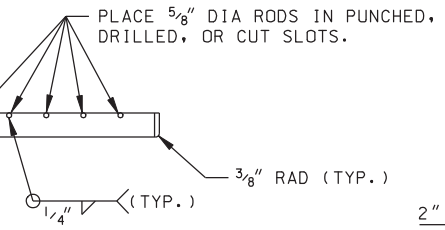


GRATE DETAIL

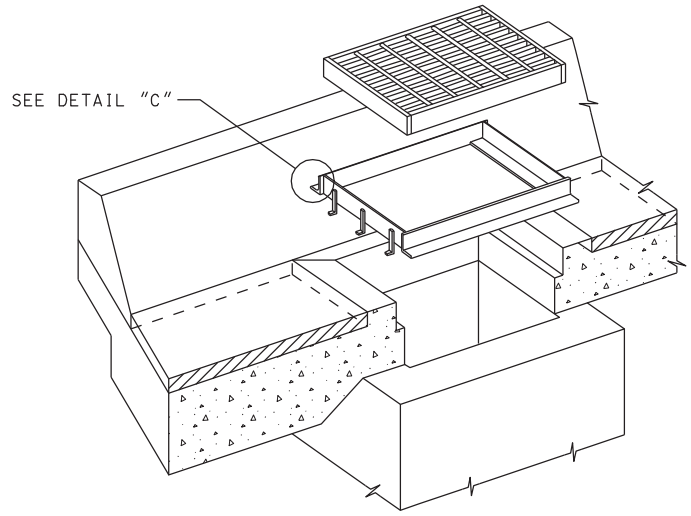


ISOMETRIC

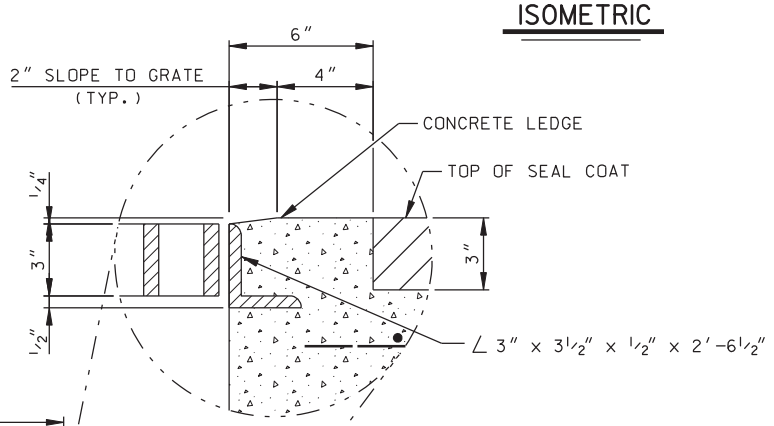


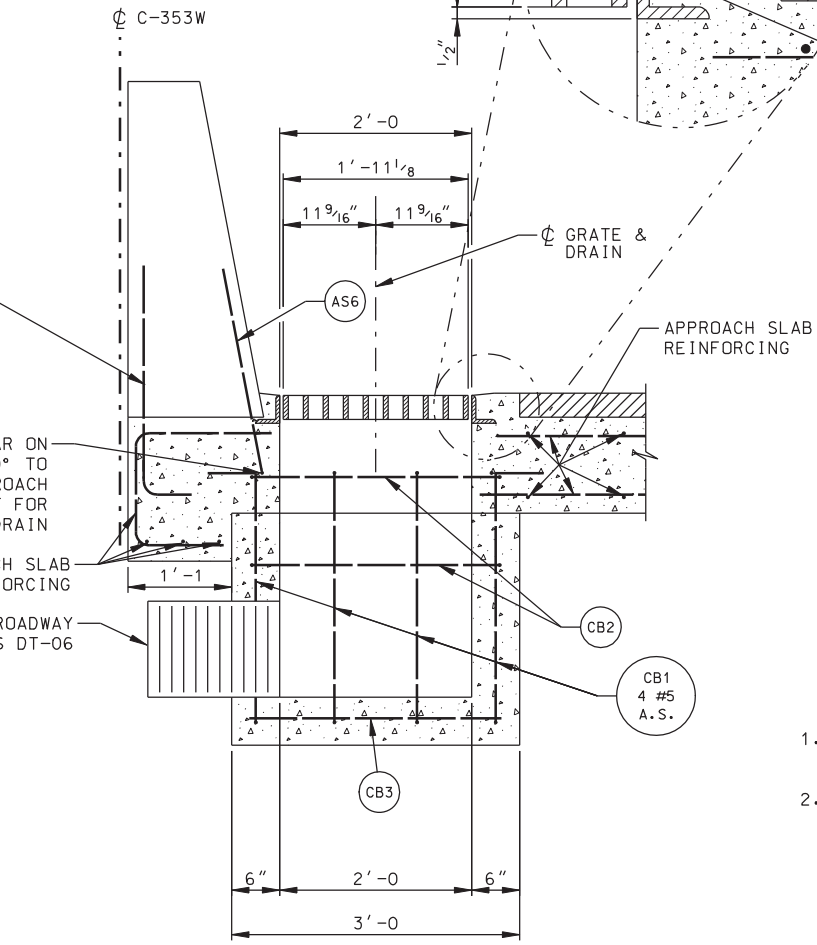


SECTION B-B

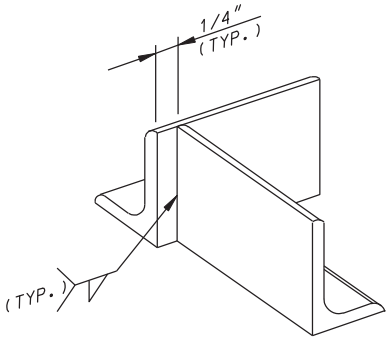


DETAIL "C"

## GENERAL NOTES

1. FIELD CUT OR BEND APPROACH SLAB REINFORCING TO CLEAR APPROACH SLAB DRAINS.
2. SEE "APPROACH SLAB PLAN" FOR THE ACTUAL LOCATION OF THE DRAIN.

| QUANTITIES STRUCTURAL CONCRETE | |
|---|---|
| 2 CATCH BASINS | 1.0 CY |
| **QUANTITIES STRUCTURAL STEEL** | |
| 2 GRATES & FRAMES | 546 LBS |

| NO. | DATE | BY | REMARKS |
|---|---|---|---|
| | | | |

REVISIONS

UTAH DEPARTMENT OF TRANSPORTATION
SALT LAKE CITY, UTAH
STRUCTURES DIVISION
HORROCKS ENGINEERS

DESIGN RSH 09/04 CHECK MAD 09/04
DRAWN DKJ 09/04 CHECK LRR 09/04
QUANT. RSH 01/05 CHECK NBD 01/05

APPROVAL RECOMM. DATE SENIOR DESIGN ENGR.
APPROVED FOR USE BY UDOT DATE UDOT BRIDGE ENGR.

I-15; CORRIDOR IN UTAH COUNTY
I-15 1600 NORTH OVERPASS IN OREM
APPROACH SLAB DRAIN DETAILS
PROJECT NUMBER SP-15-6(52)241

UTAH
COUNTY

C-353W
DRG. NO.

SHT. 20 OF 25

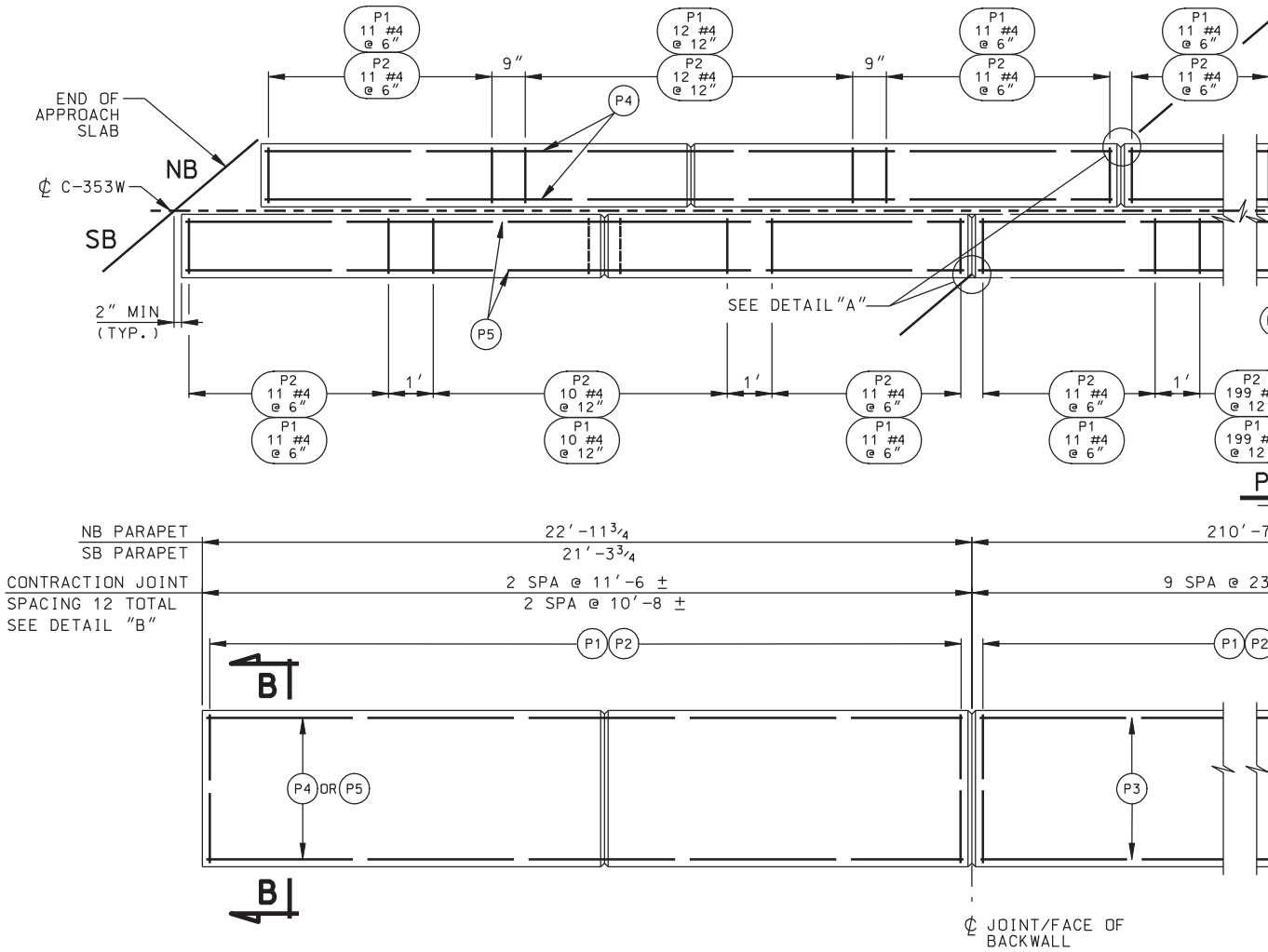


## ELEV

ALL DIMENSIONS SHOWN

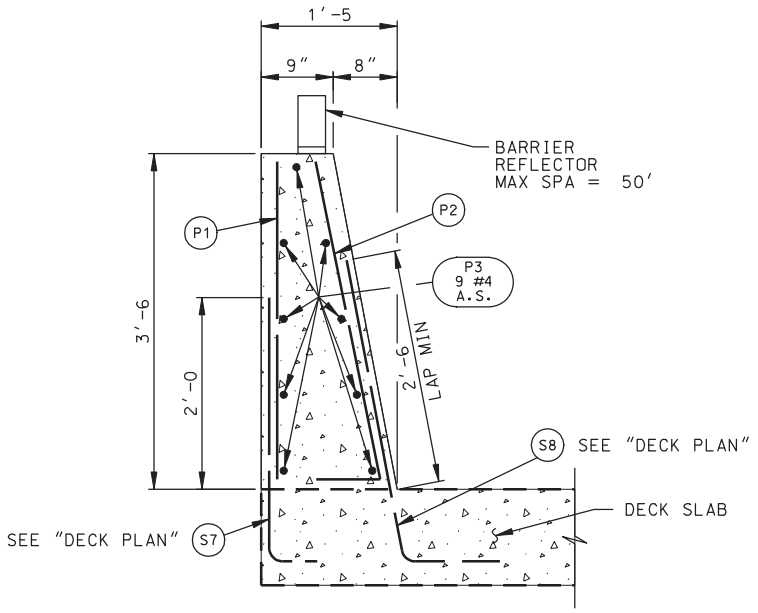


## SECTION A-A

NB PARAPET SHOWN, SB SIMILAR

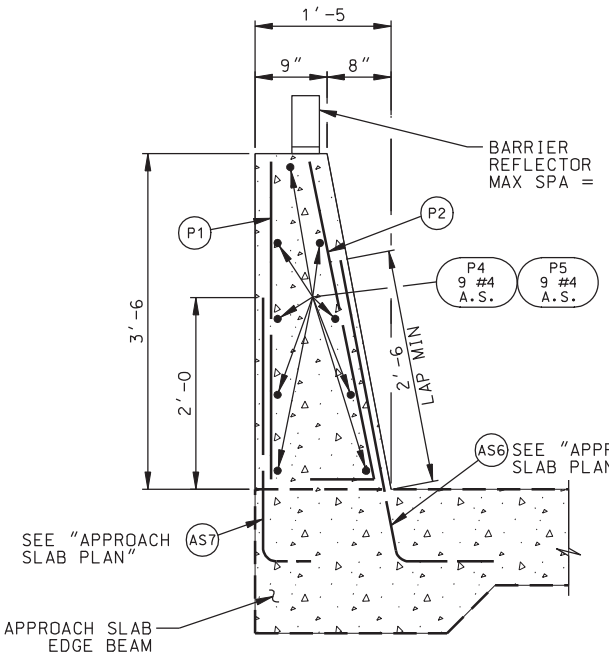


## SECTION B-B

NB PARAPET SHOWN, SB SIMILAR

DGN File: IP_PWPcdns1717\4433_C-353_21_PARA01.dgn
02-MAY-2005

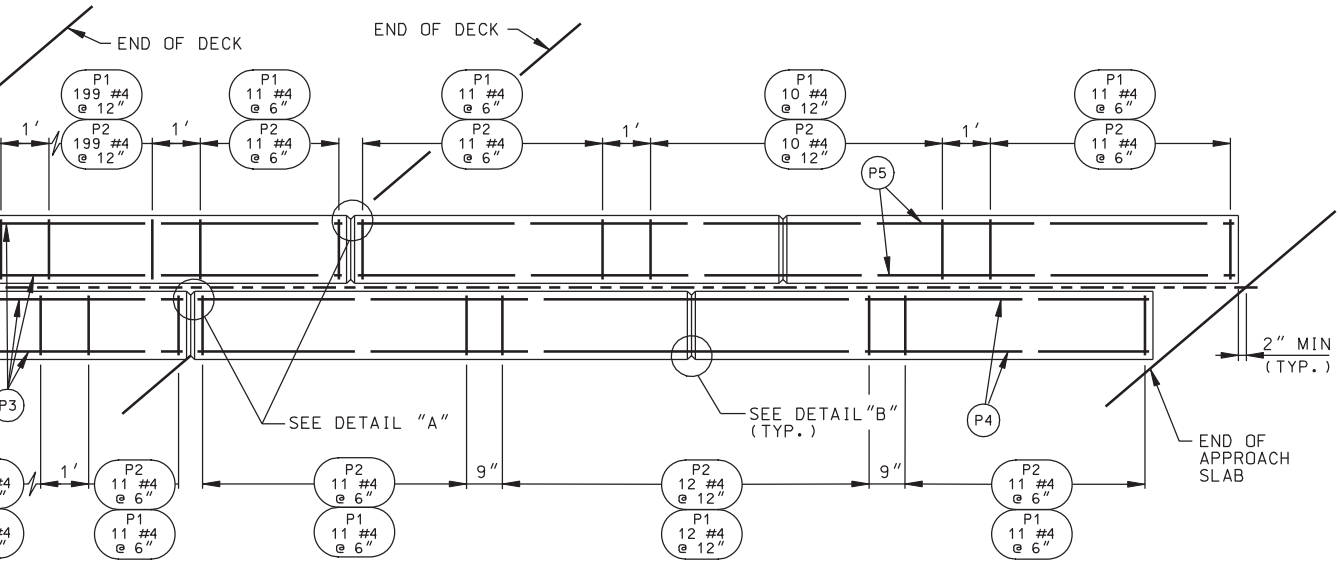


## PLAN

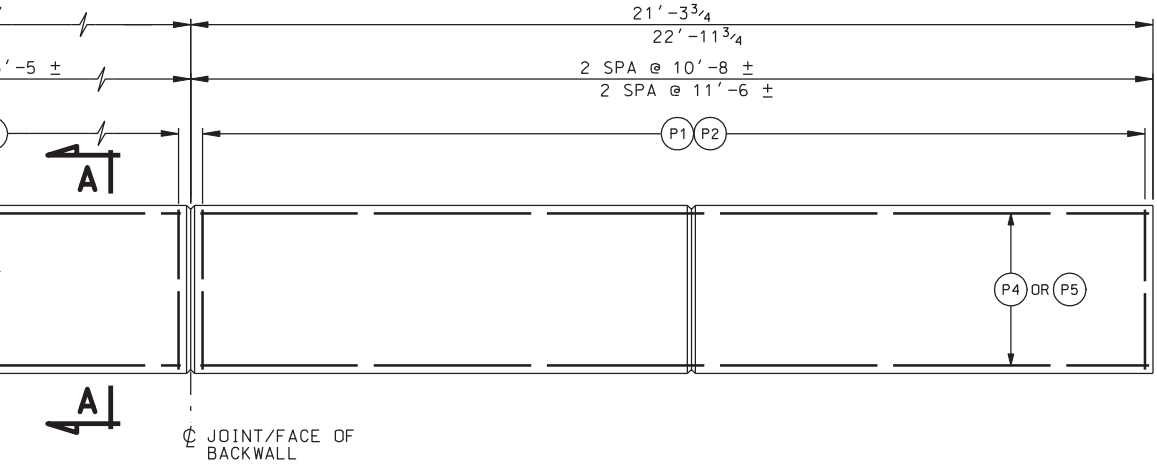


## VATION

ARE ALONG EDGE OF DECK

50'

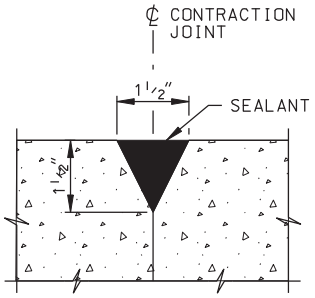


## DETAIL "B"

CONTRACTION JOINT

ROACH
N"

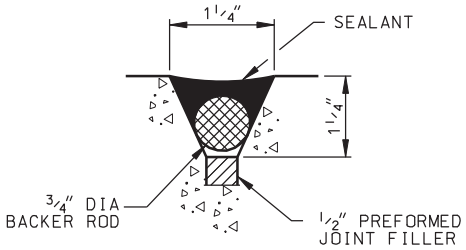


## DETAIL "A"

AT END OF BRIDGE DECK

## NOTES

1. ALTERNATE ALL REINFORCING STEEL SPLICES.
2. PROVIDE 2" MIN. COVER TO REINFORCING STEEL UNLESS NOTED OTHERWISE.
3. PLACE CONTRACTION JOINT ON SIDES AND TOP OF PARAPET.
4. EXTEND SEALANT AND FOAM BACKER ROD FROM DECK TO TOP OF PARAPET ON THE INSIDE PARAPET FACE AND ACROSS TOP OF PARAPET.
5. FOR END DETAILS OF PARAPET, SEE "PARAPET END DETAILS" SHEET.
6. ADJUST BAR SPACING AS REQUIRED TO NOT EXCEED MAXIMUM SPACING SHOWN.

| QUANTITIES STRUCTURAL CONCRETE | |
|---|---|
| NB & SB PARAPETS | 71.7 CY |

| NO. | DATE | BY | REMARKS |
|---|---|---|---|
| | | | |

REVISIONS

UTAH DEPARTMENT OF TRANSPORTATION
SALT LAKE CITY, UTAH
STRUCTURES DIVISION

HORROCKS ENGINEERS

DESIGN RSH 09/04 CHECK MAD 09/04
DRAWN DKJ 09/04 CHECK LRR 09/04
QUANT. RSH 01/05 CHECK NBD 01/05

APPROVAL RECOMM. DATE SENIOR DESIGN ENGR.
APPROVED FOR USE BY UDOT DATE UDOT BRIDGE ENGR.

I-15; CORRIDOR IN UTAH COUNTY
I-15 1600 NORTH OVERPASS IN OREM
PARAPET DETAILS
PROJECT NUMBER SP-15-6(52)241

UTAH
COUNTY

C-353W
DRG. NO.

SHT. 21 OF 25

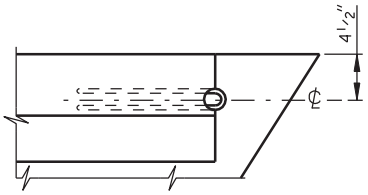


PLAN

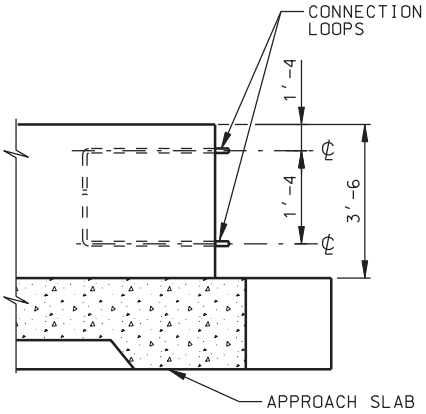


ELEVATION

STANDARD END DETAILS

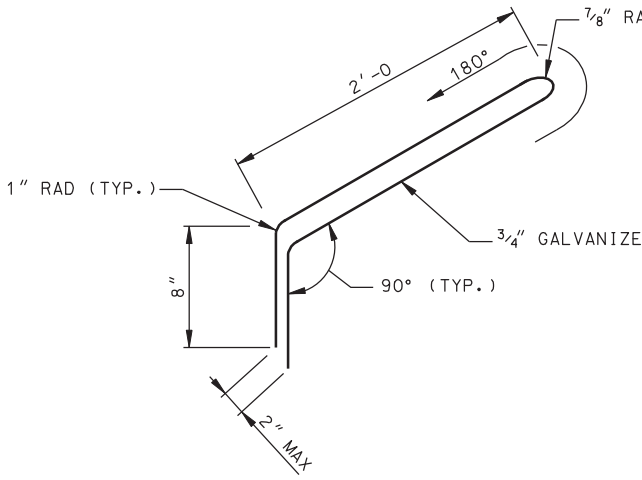


CONNECTION LOOP DETAI

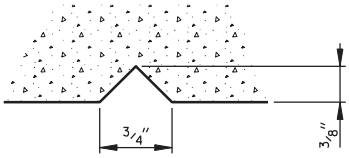


TYPICAL SECTION

THRU STRUCTURE NUMBER

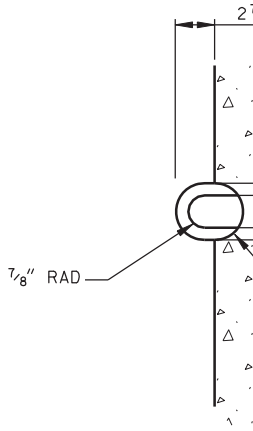


CON

DGN File:IP_PWPcdms1717\4433_C-353_22_PAREND01.dgn

02-MAY-2005

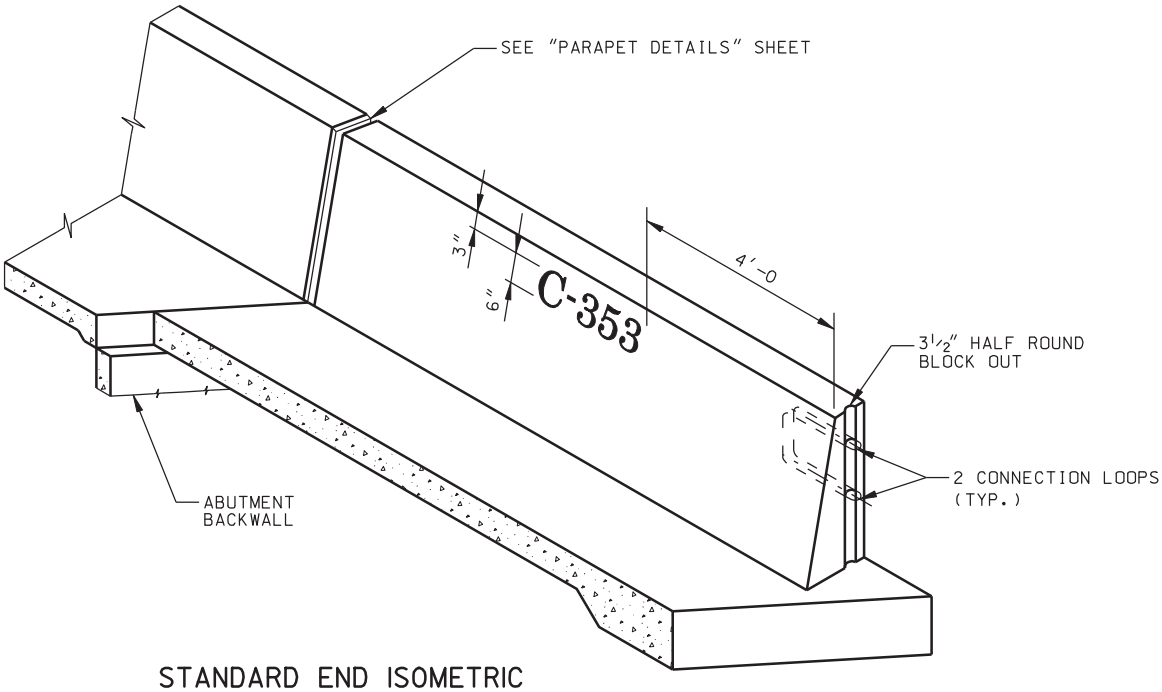


STANDARD END ISOMETRIC

D STEEL BAR

L

/8"

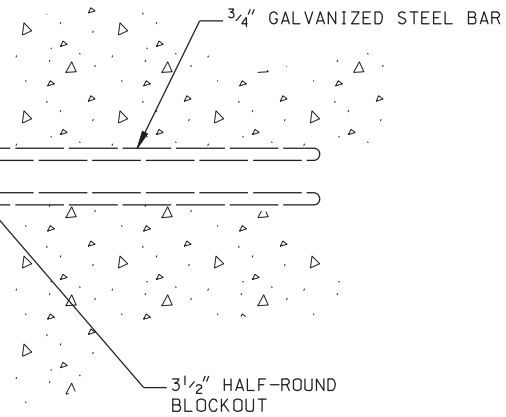


NECTION BAR END DETAIL

## NOTES

1. INSTALL CONNECTION LOOPS AT ALL PARAPET ENDS.
2. CONNECTION LOOPS NOT INCLUDED IN REINFORCING STEEL SCHEDULE.

| NO. | DATE | BY | REMARKS |
|---|---|---|---|

REVISIONS

UTAH DEPARTMENT OF TRANSPORTATION
SALT LAKE CITY, UTAH
STRUCTURES DIVISION

HORROCKS ENGINEERS

DESIGN RSH 09/04 CHECK MAD 09/04
DRAWN DKJ 09/04 CHECK LRR 09/04
QUANT. RSH 01/05 CHECK NBD 01/05

APPROVAL RECOMM. DATE SENIOR DESIGN ENGR.
APPROVED FOR USE BY UDOT DATE UDOT BRIDGE ENGR.

I-15; CORRIDOR IN UTAH COUNTY
I-15 1600 NORTH OVERPASS IN OREM
PARAPET END DETAILS
PROJECT NUMBER SP-15-6(52)241

UTAH
COUNTY

C-353W
DRG. NO.

SHT. 22 OF 25

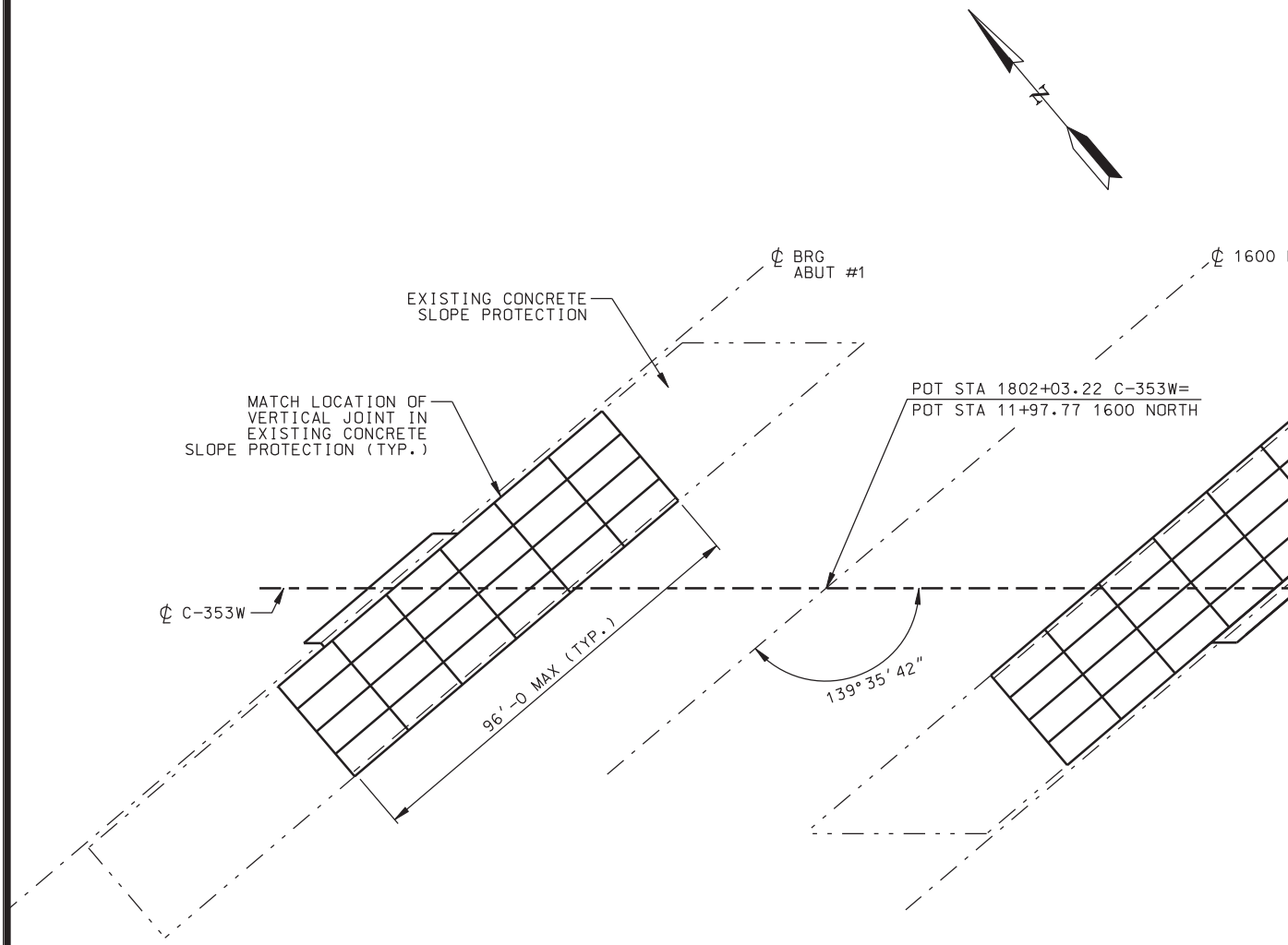


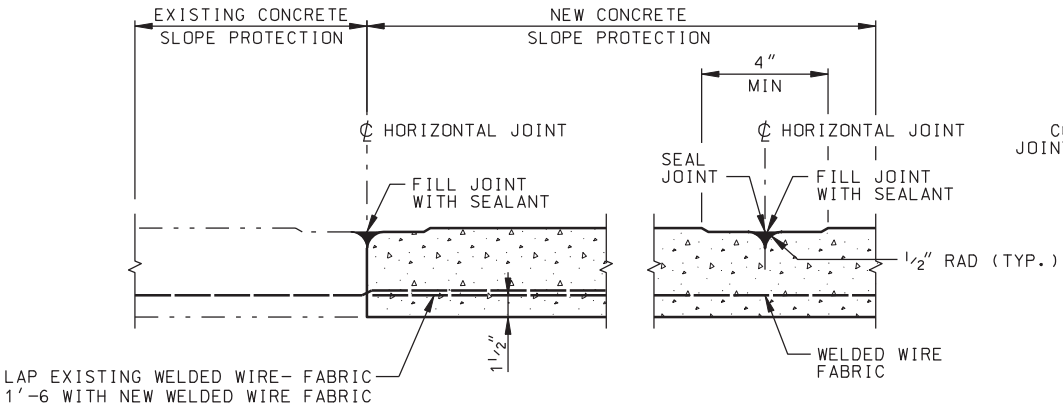


HORIZONTAL JOINT DETAIL

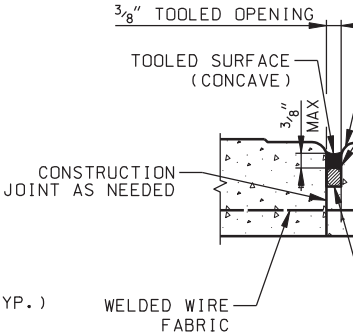


V

DGN File: IP_PWPcdns1717\4433_C-353_23_SLOPE01.dgn

02-MAY-2005

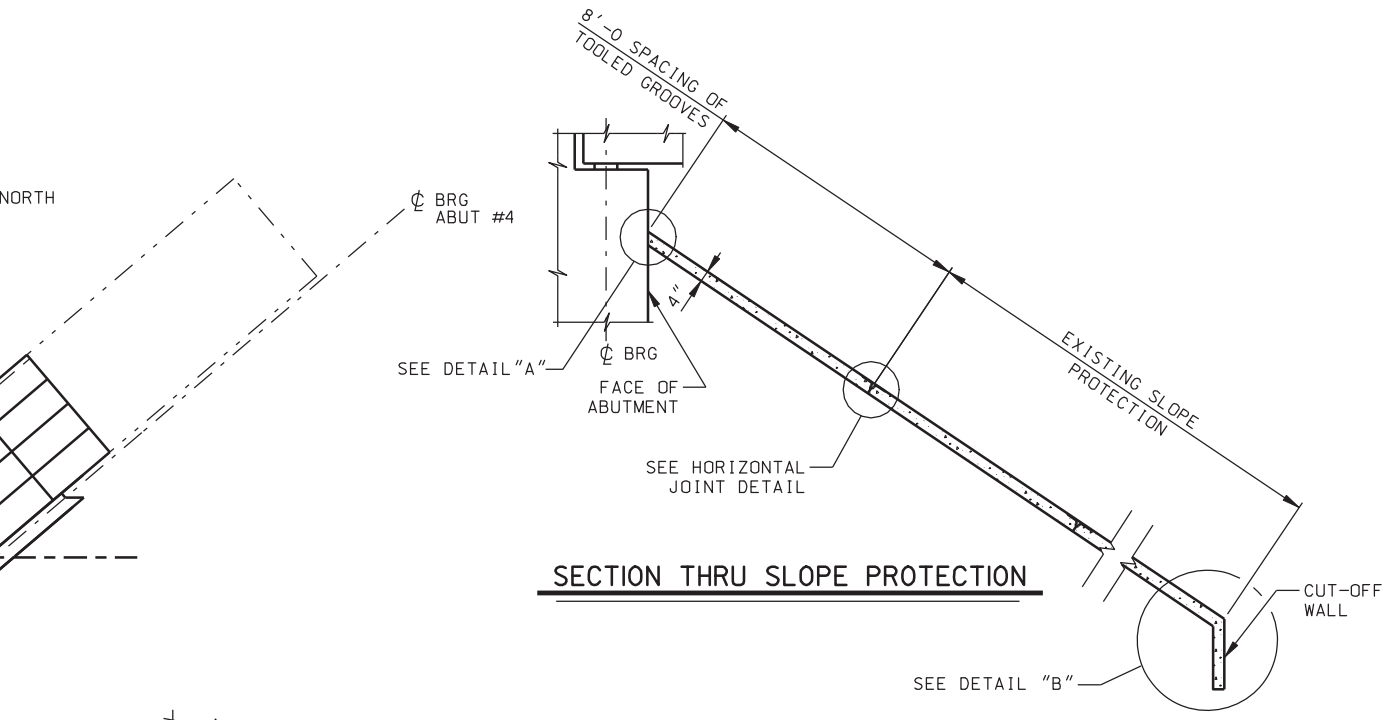


## SECTION THRU SLOPE PROTECTION

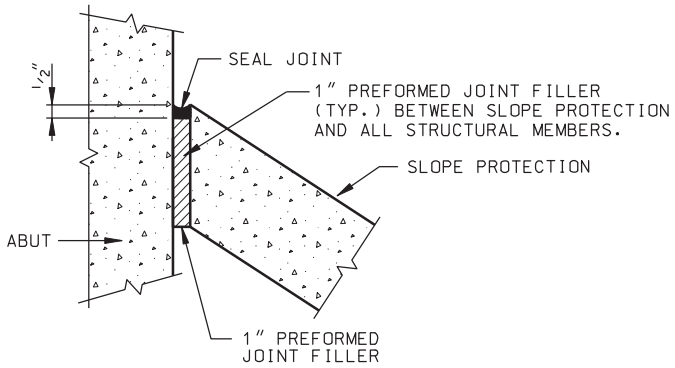


## DETAIL "A"

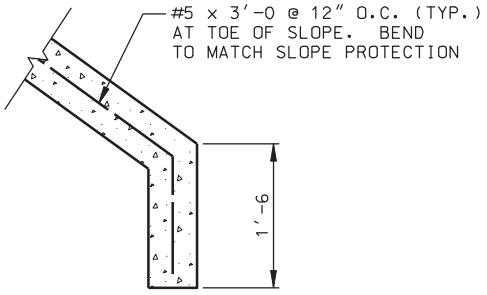


## DETAIL "B"

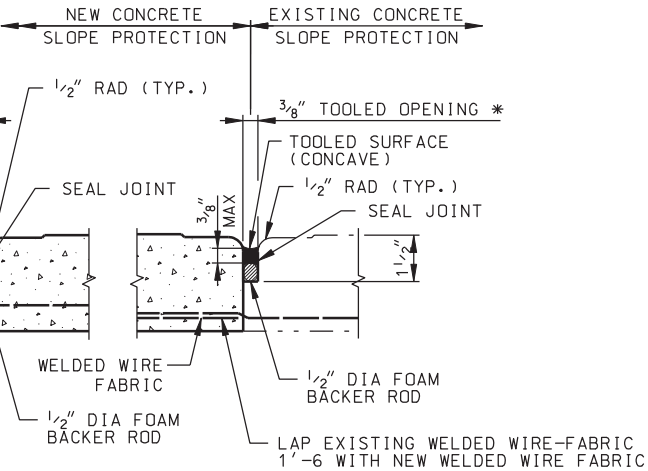


* NOTE: TOOL OPENING IN THE NEW CONCRETE SLOPE PROTECTION IF REQUIRED.

## ERTICAL JOINT DETAIL

## NOTES

1. QUANTITIES GIVEN FOR CONCRETE SLOPE PROTECTION ARE ESTIMATES ONLY AND ARE BASED ON THE EXPOSED FINISHED CONCRETE SURFACE AREA AT TIME OF PLACEMENT.
2. MATCH SPACING OF HORIZONTAL AND VERTICAL JOINTS OF THE EXISTING SLOPE PROTECTION.
3. MATCH THE ELEVATION AND SLOPE OF THE EXISTING SLOPE PROTECTION.
4. JUST PRIOR TO FINAL INSPECTION SEAL JOINTS BETWEEN THE CONCRETE SLOPE PROTECTION AND ALL STRUCTURAL MEMBERS.
5. USE CLASS A (AE) CONCRETE FOR ALL SLOPE PROTECTION.
6. USE WELDED WIRE FABRIC 6" x 6" - W 1.4 x W 1.4.
7. PAYMENT FOR CUT-OFF WALLS SHALL BE INCLUDED IN THE CONTRACT PRICE PER SQUARE YARD FOR CONCRETE SLOPE PROTECTION.

| SLOPE PROTECTION QUANTITIES | |
|---|---|
| REPLACEMENT | 685 SQ. YDS |

| NO. | DATE | BY | REMARKS |
|---|---|---|---|
| | | | |

REVISIONS

UTAH DEPARTMENT OF TRANSPORTATION
SALT LAKE CITY, UTAH
STRUCTURES DIVISION
HORROCKS ENGINEERS

DESIGN RSH 09/04 CHECK MAD 09/04
DRAWN DKJ 09/04 CHECK LRR 09/04
QUANT. RSH 01/05 CHECK NBD 01/05

APPROVAL RECOMM. DATE SENIOR DESIGN ENGR.
APPROVED FOR USE BY UDOT DATE UDOT BRIDGE ENGR.

I-15; CORRIDOR IN UTAH COUNTY
I-15 1600 NORTH OVERPASS IN OREM
CONCRETE SLOPE PROTECTION
PROJECT NUMBER SP-15-6(52)241

UTAH
COUNTY

C-353W
DRG. NO.

SHT. 23 OF 25

# REINFORCING ST

## ABUTMENTS

| MARK | SIZE | NUM | LENGTH | TOTAL | DIAGRAM |
|---|---|---|---|---|---|
| A1 | 5 | 56 | 18′-7 | 1040′-8 | 18′-7 |
| A2 | 6 | 188 | 5′-6 | 1034′-0 | 4′-6 / 12″ |
| A3 | 6 | 19 | 8′-10 | 167′-10 | 2′-7 / 5′-3 / 1′-0 |
| A4 | 6 | 38 | 10′-3 | 389′-6 | 4′-0 / 5′-3 / 1′-0 |
| A5 | 6 | 19 | 12′-3 | 232′-9 | 6′-0 / 5′-3 / 1′-0 |
| A6 | 5 | 76 | 5′-0 | 380′-0 | 5′-0 |
| A7 | 6 | 37 | 5′-8 | 209′-8 | 5′-8 |
| A8 | 6 | 74 | 7′-0 | 518′-0 | 7′-0 |
| A9 | 6 | 37 | 9′-1 | 336′-1 | 9′-1 |
| A10 | 5 | 8 | 4′-0 | 32′-0 | 2′-0 / 2′-0 |
| A11 | 6 | 2 | 4′-0 | 8′-0 | 4′-0 |
| A12 | 5 | 76 | 4′-8 | 354′-8 | 2′-4 / 2′-4 |
| A13 | 5 | 84 | 3′-0 | 252′-0 | 3′-0 |
| F1 | 5 | 40 | 15′-10 | 633′-4 | 15′-10 |
| F2 | 6 | 248 | 8′-5 | 2087′-4 | 8′-5 |
| F3 | 5 | 4 | 6′-0 | 24′-0 | 3′-0 / 3′-0 |

## BENT FOOTING

| MARK | SIZE | NUM | LENGTH | TOTA |
|---|---|---|---|---|
| F4 | 10 | 272 | 11′-8 | 3173 |
| F5 | 5 | 500 | 4′-5 | 2208 |

## BENT COLUMN

| MARK | SIZE | NUM | LENGTH | TOT |
|---|---|---|---|---|
| C1 | 8 | 40 | 24′-8 | 986′ |
| C2 | 8 | 40 | 26′-5 | 1056′ |
| C3 | 5 | 244 | 12′-0 | 2928′ |
| C4 | 5 | 488 | 7′-3 | 3538′ |

## BENT CAP

| MARK | SIZE | NUM | LENGTH | TOT |
|---|---|---|---|---|
| B1 | 10 | 40 | 26′-6 | 1060′ |
| B2 | 5 | 24 | 22′-4 | 536′ |
| B3 | 5 | 8 | 8′-4 | 66′ |
| B4 | 5 | 8 | 17′-4 | 138′ |
| B5 | 9 | 40 | 22′-6 | 900′ |
| B6 | 5 | 12 | 7′-6 | 90′ |
| B7 | 5 | 12 | 9′-4 | 112′ |
| NO OF SETS | 4 | | | |
| BARS/ SET | 3 | | | |
| B8 | 5 | 456 | 4′-9 | 2166 |
| B9 | 5 | 24 | 3′-7½″ | 87′ |
| NO OF SETS | 4 | | | |
| BARS/ SET | 6 | | | |

DGN File: IP_PWPcdms1717\4433_C-353_24_RBSCH01.dgn

02-MAY-2005

# TEEL SCHEDULE

| AL | DIAGRAM |
|---|---|
| '-4 | 11'-8 |
| '-4 | 3'-1; 8"; 8" |
| -8 | 1'-4; 1'-4; 22'-0 |
| '-8 | 1'-4; 1'-4; 23'-9 |
| -0 | 8"; 8"; 2'-8; 2'-8 |
| -0 | 8"; 2'-8; 7" |
| -0 | 2'-2; 2'-2; 22'-2 |
| -0 | 22'-4 |
| -8 | 8'-4 |
| -8 | 17'-4 |
| -0 | 170°; 173°; 7'-10; 3'-8; 11'-0 |
| -0 | 3'-0; 3'-0; 1'-6 |
| -0 | VARIES 2'-2 TO 2'-5; 8"; 8"; 3'-5 |
| '-0 | 8"; 3'-5; 8" |
| -0 | 8"; VARIES 2'-2 TO 2'-5; 8" |

| | MARK | SIZE | NUM | LENGTH | TOTAL | DIAGRAM |
|---|---|---|---|---|---|---|
| BENT CAP | B13 | 5 | 20 | 8'-2 | 163'-4 | 3'-0; 97°; 3'-0; 2'-2 |
| | B14 | 8 | 40 | 9'-0 | 360'-0 | 9'-0 |
| | B15 | 5 | 12 | 9'-3 | 111'-0 | 3'-0; 3'-0; 3'-3 |
| | B16 | 5 | 60 | 10'-9 1/2 | 647'-6 | 8"; VARIES 2'-6 TO 3'-6 1/2; 3'-5 |
| | NO OF SETS | 4 | | | | |
| | BARS/ SET | 15 | | | | |
| | B17 | 5 | 120 | 4'-4 1/4 | 522'-6 | 8"; VARIES 2'-6 TO 3'-6 1/2; 8" |
| | NO OF SETS | 4 | | | | |
| | BARS/ SET | 30 | | | | |
| | B18 | 5 | 60 | 11'-1 1/2 | 667'-6 | 8"; VARIES 2'-10 TO 3'-6 1/2; 3'-5 |
| | NO OF SETS | 4 | | | | |
| | BARS/ SET | 15 | | | | |
| | B19 | 5 | 120 | 4'-6 1/4 | 542'-6 | 8"; VARIES 2'-10 TO 3'-6 1/2; 8" |
| | NO OF SETS | 4 | | | | |
| | BARS/ SET | 30 | | | | |
| | B20 | 5 | 28 | 9'-8 | 270'-8 | 8"; VARIES 2'-2 TO 2'-9; 3'-5 |
| | NO OF SETS | 4 | | | | |
| | BARS/ SET | 7 | | | | |
| | B21 | 5 | 56 | 3'-9 1/2 | 212'-4 | 8"; VARIES 2'-2 TO 2'-9; 8" |
| | NO OF SETS | 4 | | | | |
| | BARS/ SET | 14 | | | | |
| DECK | S1 | 5 | 68 | 222'-9 | 15147'-0 | 2'-6; 2'-6; 210'-3 |
| | NUMBER OF SPLICES = 5 | | | | | |
| | S2 | 5 | 820 | 16'-0 | 13120'-0 | 16'-0 |
| | S3 | 5 | 64 | 25'-0 | 1600'-0 | 25'-0 |
| | S4 | 5 | 360 | 6'-0 | 2160'-0 | 6'-0 |
| | S5 | 5 | 140 | 8'-8 | 1213'-4 | VARIES 1'-5 TO 15'-11 |
| | NO OF SETS | 4 | | | | |
| | BARS/ SET | 35 | | | | |
| | S6 | 5 | 128 | 7'-8 1/2 | 986'-8 | VARIES 1'-1 TO 14'-4 |
| | NO OF SETS | 4 | | | | |
| | BARS/ SET | 32 | | | | |

| NO. | DATE | BY | REMARKS |
|---|---|---|---|
| | | | |

REVISIONS

UTAH DEPARTMENT OF TRANSPORTATION
SALT LAKE CITY, UTAH
STRUCTURES DIVISION

HORROCKS ENGINEERS

DESIGN RSH 09/04 CHECK MAD 09/04
DRAWN DKJ 09/04 CHECK LRR 09/04
QUANT. RSH 01/05 CHECK NBD 01/05

APPROVAL RECOMM. DATE SENIOR DESIGN ENGR.
APPROVED FOR USE BY UDOT DATE UDOT BRIDGE ENGR.

I-15; CORRIDOR IN UTAH COUNTY
I-15 1600 NORTH OVERPASS IN OREM
REINFORCING STEEL SCHEDULE 1

PROJECT NUMBER SP-15-6(52)241

UTAH
COUNTY

C-353W
DRG. NO.

SHT. 24 OF 25

## REINFORCING S

| | MARK | SIZE | NUM | LENGTH | TOTAL | DIAGRAM |
|---|---|---|---|---|---|---|
| DECK | S7 | 5 | 442 | 3′-6 | 1547′-0 | 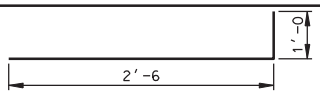  |
| | S8 | 5 | 442 | 4′-2 | 1841′-8 | 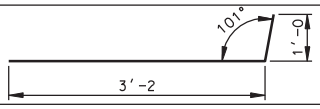  |
| | S9 | 5 | 68 | 4′-0 | 272′-0 |   |
| | S10 | 5 | 48 | 3′-10 | 184′-0 | 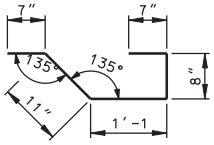  |
| | S11 | 5 | 8 | 23′-0 | 184′-0 | 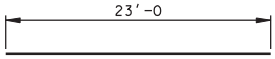  |
| | S12 | 5 | 48 | 6′-0 | 288′-0 | 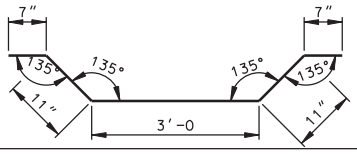  |
| | S13 | 5 | 48 | 8′-1 | 388′-0 | 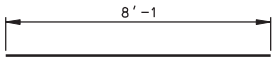  |
| APPROACH SLAB DRAINS | CB1 | 5 | 12 | 9′-4 | 112′-0 | 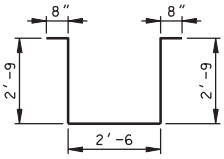  |
| | CB2 | 5 | 4 | 11′-4 | 45′-4 | 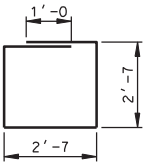  |
| | CB3 | 5 | 4 | 2′-6 | 10′-0 | 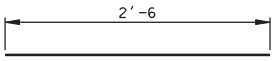  |
| APPROACH SLAB | AS1 | 5 | 128 | 24′-10 | 3178′-8 | 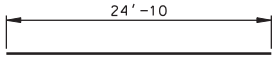  |
| | AS2 | 5 | 60 | 22′-7 | 1355′-0 | 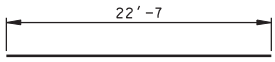  |
| | AS3 | 8 | 92 | 22′-7 | 2077′-8 | 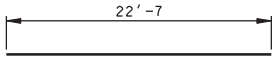  |
| | AS4 | 8 | 8 | 24′-1 | 192′-8 | 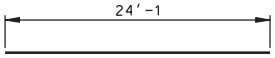  |
| | AS5 | 8 | 12 | 24′-1 | 289′-0 | 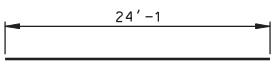  |

| | MARK | SIZE | NUM | LENGTH | TOTA |
|---|---|---|---|---|---|
| APPROACH SLAB | AS6 | 4 | 132 | 4′-6 | 594′ |
| | AS7 | 4 | 132 | 3′-10 | 506′ |
| | AS8 | 5 | 152 | 5′-8 | 861′ |
| | AS9 | 7 | 12 | 24′-10 | 298′ |
| | AS10 | 8 | 8 | 24′-1 | 192′ |
| PARAPETS | P1 | 4 | 574 | 3′-2 | 1817 |
| | P2 | 4 | 574 | 3′-10 | 2200 |
| | P3 | 4 | 18 | 222′-8 | 4008 |
| | NUMBER OF SPLICES = 5 | | | | |
| | P4 | 4 | 18 | 22′-8 | 408′ |
| | P5 | 4 | 18 | 21′-0 | 378′ |

## STEEL SCHEDULE

| AL | DIAGRAM |
|---|---|
| -0 | 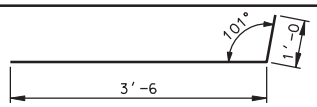  |
| -0 | 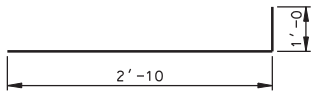  |
| -4 | 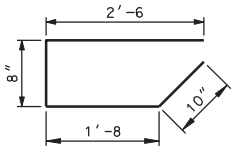  |
| -0 | 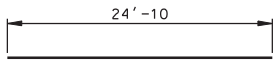  |
| -8 | 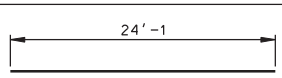  |
| '-8 | 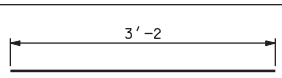  |
| '-4 | 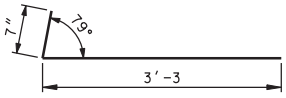  |
| '-0 | 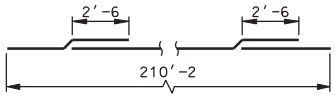  |
| -0 | 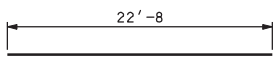  |
| -0 | 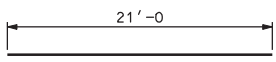  |

## SUMMARY

9912'-0 OF #4 @ 0.668 LBS/FT = 6621 LBS
62218'-8 OF #5 @ 1.043 LBS/FT = 64,894 LBS
4983'-2 OF #6 @ 1.502 LBS/FT = 7485 LBS
298'-0 OF #7 @ 2.044 LBS/FT = 609 LBS
5155'-4 OF #8 @ 2.670 LBS/FT = 13,765 LBS
900'-0 OF #9 @ 3.400 LBS/FT = 3060 LBS
4233'-4 OF #10 @ 4.303 LBS/FT = 18,216 LBS

TOTAL = 114,650 LBS

## NOTES

1. ALL DIMENSIONS ARE OUT TO OUT BAR UNLESS NOTED OTHERWISE.
2. ALL ANGLES ARE 90° UNLESS NOTED OTHERWISE.
3. ALL BARS ARE COATED.
4. SPLICES MAY BE OMITTED AT FABRICATOR'S OPTION. FABRICATOR ASSUMES RESPONSIBILITY FOR FIT. SPLICES ARE BASED ON 40 FT BAR LENGTHS.
5. ALL REINFORCING STEEL IS INCLUDED IN THE PAY ITEM REINFORCING STEEL-COATED.

| NO. | DATE | BY | REMARKS |
|---|---|---|---|
| | | | |

REVISIONS

UTAH DEPARTMENT OF TRANSPORTATION
SALT LAKE CITY, UTAH
STRUCTURES DIVISION

HORROCKS ENGINEERS

DESIGN RSH 09/04 CHECK MAD 09/04
DRAWN DKJ 09/04 CHECK LRR 09/04
QUANT. RSH 01/05 CHECK NBD 01/05

APPROVAL RECOMM. DATE SENIOR DESIGN ENGR.
APPROVED FOR USE BY UDOT DATE UDOT BRIDGE ENGR.

I-15; CORRIDOR IN UTAH COUNTY
I-15 1600 NORTH OVERPASS IN OREM
REINFORCING STEEL SCHEDULE 2
PROJECT NUMBER SP-15-6(52)241

UTAH
COUNTY

C-353W
DRG. NO.

SHT. 25 OF 25

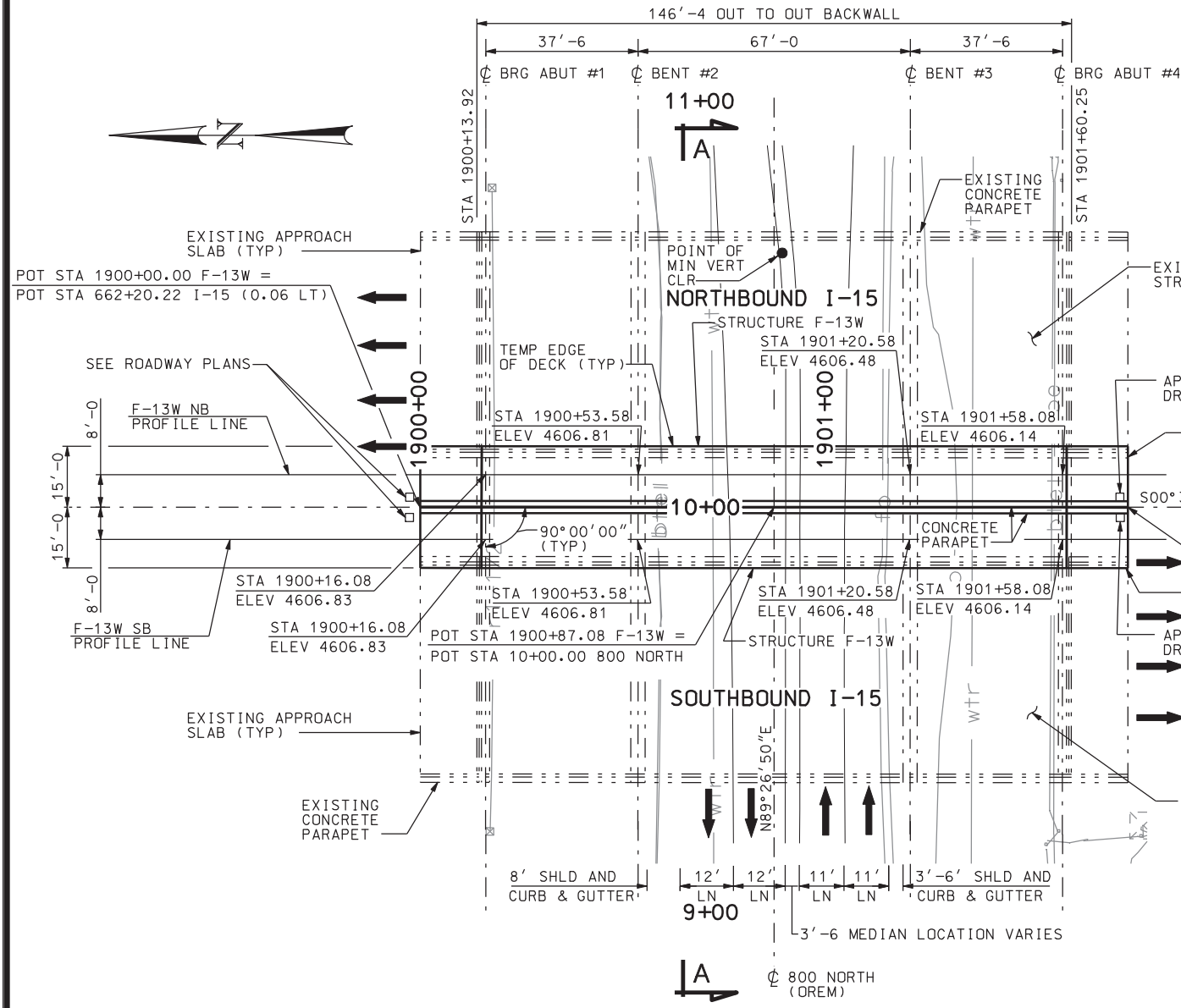


## PLAN

## INDEX OF SHEETS


1. SITUATION & LAYOUT 1
2. SITUATION & LAYOUT 2
3. SOIL DATA SHEET
4. FOUNDATION PLAN
5. ABUTMENT #1 PLAN & ELEVATION
6. ABUTMENT #4 PLAN & ELEVATION
7. ABUTMENT DETAILS
8. BENT PLAN & ELEVATION
9. BENT DETAILS 1
10. BENT DETAILS 2
11. BENT DETAILS 3
12. FRAMING PLAN
13. GIRDER DETAILS-SPANS 1 & 3
14. GIRDER DETAILS-SPAN 2
15. DIAPHRAGM & BEARING DETAILS
16. DECK PLAN
17. DECK SECTIONS
18. APPROACH SLAB PLAN
19. APPROACH SLAB DETAILS
20. APPROACH SLAB DRAIN DETAILS
21. SCREED ELEVATIONS
22. PARAPET DETAILS
23. PARAPET END DETAILS
24. CONCRETE SLOPE PROTECTION
25. REINFORCING SCHEDULE 1
26. REINFORCING SCHEDULE 2


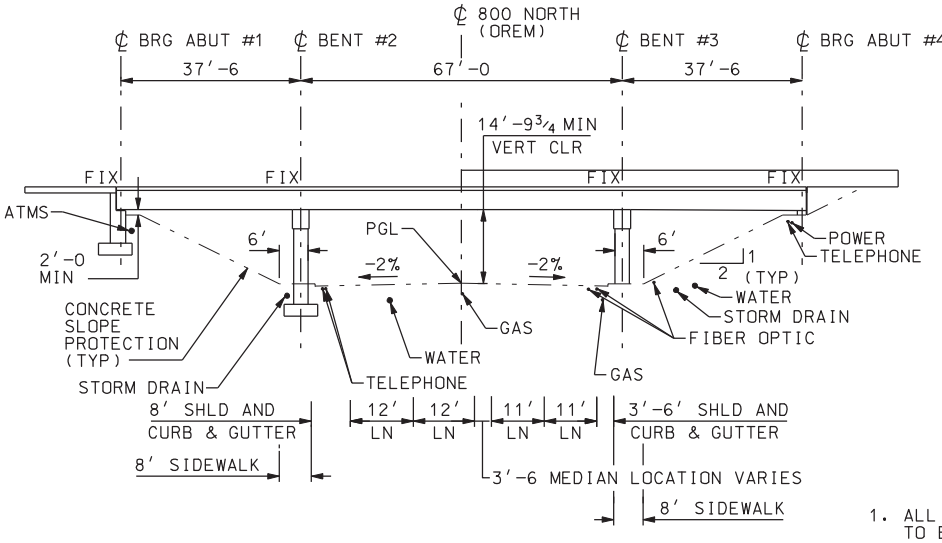


## ELEVATION

1. ALL
TO E

2. ROAD
IS E
ROAD
IS A

3. ROAD
NOT
AT E

DGN File: IP_PWPcdns1717\4433_F13_01.dgn

02-MAY-2005

STING
UCTURE F-13

PROACH SLAB
AIN

- APPROACH
SLAB (TYP)

33'10"E
℄ F-13W

POT STA 1901+74.17 F-13W =
POT STA 663+94.39 I-15 (0.11 RT)

- APPROACH
SLAB (TYP)

PROACH SLAB
AIN

EXISTING
STRUCTURE F-13

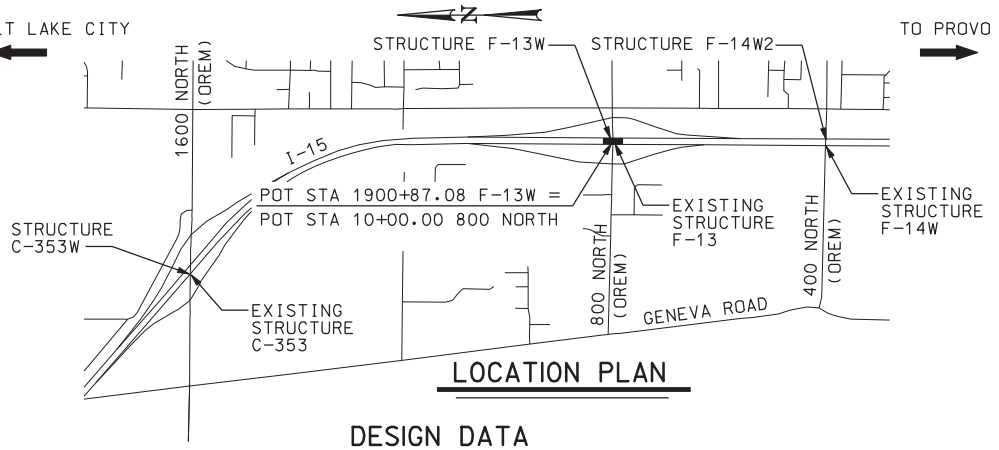


## LOCATION PLAN

## DESIGN DATA

HL-93 LOADING IN ACCORDANCE WITH AASHTO LRFD BRIDGE DESIGN SPECIFICATIONS, 3rd EDITION, 2004. SEISMIC DESIGN PER NCHRP 12-49.

INVENTORY AND OPERATING RATINGS FOR HS20-44 ARE IN ACCORDANCE WITH THE AASHTO MANUAL FOR CONDITION ELEVATION OF BRIDGES, 2nd EDITION, AND THE 2001 AND 2003 INTERIM SPECIFICATIONS LOAD FACTOR METHOD. INVENTORY AND OPERATING RATINGS FOR HL-93 ARE IN ACCORDANCE WITH THE GUIDE MANUAL FOR CONDITION EVALUATION AND LOAD RESISTANCE FACTOR RATING (LRFR) OF HIGHWAY BRIDGES.

| | OPERATING RATING | INVENTORY RATING |
|---|---|---|
| EXISTING GIRDERS | (HS-20) 1.63 | (HS-20) 0.98 (SHEAR - SPANS 1 & 3) |
| | (HL-93) 1.50 | (HL-93) 1.16 (SHEAR - SPANS 1 & 3) |
| NEW GIRDERS | (HL-93) 1.55 | (HL-93) 1.19 (SHEAR - SPAN 2) |
| CAST-IN-PLACE CONCRETE: | f'c = 4000 psi; fy (REINF) = 60 ksi | |
| PRESTRESSED CONCRETE: | f'c = 6000 psi; fci = 4000 psi; | |
| STRUCTURAL STEEL: | fy = 36 ksi | |
| WEARING SURFACE: | 3" ASPHALT; 0 PSF (FUTURE) | |
| DESIGN SPEED: | I-15 = 70 MPH; 800 NORTH = 40 MPH | |
| SEISMIC: | SEISMIC DESIGN PARAMETERS (500 YR RETURN PERIOD, 10% PE IN 50 YR)<br>Ss = MAX. CONSIDERED EQ GROUND MOTION AT 0.2s = 0.4312G.<br>S1 = MAX. CONSIDERED EQ GROUND MOTION AT 1.0s = 0.1456g.<br>SITE CLASS D<br>EXISTING STRUCTURE ELEMENTS DO NOT MEET THE SEISMIC DESIGN CRITERIA | |

## GENERAL NOTES

1. USE COATED DEFORMED BILLET-STEEL BARS CONFORMING TO AASHTO M 284 OR M 111 AND M 31 GRADE 60 FOR ALL REINFORCING STEEL.
2. CONFORM ALL STRUCTURAL STEEL TO AASHTO M 270 GRADE 36, EXCEPT WHERE NOTED OTHERWISE.
3. CHAMFER ALL EXPOSED CONCRETE CORNERS 3/4" EXCEPT WHERE NOTED OTHERWISE.
4. PROVIDE 2" CONCRETE COVER TO REINFORCING STEEL EXCEPT WHERE NOTED OTHERWISE.
5. USE CLASS AA (AE) FOR CAST-IN-PLACE CONCRETE EXCEPT WHERE SPECIFIED OTHERWISE.
6. ALL NEW SUBSTRUCTURE ELEMENTS ARE DESIGNED TO MATCH LOCATION AND DIRECTION OF EXISTING ELEMENTS. FIELD VERIFY ALL CONTROLLING DIMENSIONS PRIOR TO CONSTRUCTION AND FABRICATION OF ANY MATERIALS. REPORT ANY DISCREPANCY BETWEEN THESE PLANS AND THE EXISTING STRUCTURE TO THE ENGINEER. DO NOT CONSTRUCT OR FABRICATE ANY ELEMENTS UNTIL THE DISCREPANCIES ARE RESOLVED. ALL STRUCTURE GEOMETRY IS BASED ON LOCAL SURVEY CONTROL POINTS SHOWN ON THE FOUNDATION PLAN. THE I-15 STATIONING AND ALIGNMENT IS FOR INFORMATION ONLY. ABUTMENT/BENT DIRECTIONS AND LOCATIONS USED IN DESIGN ARE LISTED.
7. SEE EXISTING STRUCTURE F-13 PLANS FOR ADDITIONAL INFORMATION.
8. VERIFY RELATIVE ELEVATION DIFFERENCES BETWEEN F-13 AND F-13W AT BOTTOM OF NBL AND SBL INTERIOR MOST EXISTING BEAMS AT FROM FACE OF ABUTMENT, SEE ABUTMENT PLAN AND ELEVATION SHEET. IF THE RELATIVE ELEVATION DIFFERENCES VARY BY MORE THAN +/- 1", ADJUST ALL PLAN ELEVATIONS ACCORDINGLY AND SUBMIT TO THE ENGINEER FOR APPROVAL BEFORE MAKING ANY ADJUSTMENTS IN THE FIELD.
9. LINE F-13W IS OBTAINED BY CREATING A LINE CONNECTING TWO POINTS EACH LOCATED ALONG THE CENTERLINE BEARING ABUTMENT #1 AND #4 RESPECTIVELY THAT ARE EQUIDISTANT FROM THE CENTERLINE OF THE SBL AND NBL INTERIOR MOST BEAMS.
10. ALL DECK, APPROACH SLAB AND PROFILE GRADE ELEVATIONS ARE TOP OF CONCRETE.
11. HORIZONTAL DIMENSIONS ARE PLAN. VERTICAL DIMENSIONS ARE PLUMB.
12. DO NOT SCALE DRAWINGS.
13. SEE REHABILITATION PLANS, DRAWING NO. M-91 FOR REHABILITATION INFORMATION.
14. SEE UTILITY PLANS FOR ADDITIONAL UTILITY INFORMATION.

## NOTES

BENTS AND ABUTMENTS ARE PARALLEL
BEARING S89°26'50"W.

DWAY INFORMATION FOR 800 NORTH
BASED ON EXISTING PLANS.
DWAY TYPICAL SECTION VARIES AND
APPROXIMATE.

DWAY CENTER LINE I-15 ALIGNMENT
SHOWN. STATION EQUATIONS LOCATED
END OF APPROACH SLABS.

## QUANTITIES

| ITEM | EST | UNIT | AS CONSTR |
|---|---|---|---|
| GRANULAR BACKFILL BORROW (PLAN QUANTITY) | 128 | CU YD | |
| STRUCTURAL FILL BENEATH FOUNDATIONS | 118 | CU YD | |
| REINFORCING STEEL - COATED | 85730 | LBS | |
| STRUCTURAL CONCRETE (EST. LUMP QTY: 476 CU YD) | 1 | LUMP | |
| STRUCTURAL STEEL (EST. LUMP QTY: 546 LBS) | 1 | LUMP | |
| PRESTRESSED CONCRETE MEMBER (37 FT-11 INCH TYPE III) | 8 | EACH | |
| PRESTRESSED CONCRETE MEMBER (66 FT-8 INCH TYPE III) | 4 | EACH | |
| PREPARE BRIDGE FOR WIDENING | 1 | LUMP | |
| REPLACE CONCRETE SLOPE PROTECTION | 225 | SQ YD | |

| NO. | DATE | BY | REMARKS |
|---|---|---|---|

REVISIONS

UTAH DEPARTMENT OF TRANSPORTATION
SALT LAKE CITY, UTAH
STRUCTURES DIVISION

DESIGN PH 12/04 CHECK GTD 12/04
DRAWN DKH 12/04 CHECK PH 12/04
QUANT. CDT 12/04 CHECK CEL 12/04

APPROVAL RECOMM. DATE SENIOR DESIGN ENGR.
APPROVED FOR USE BY UDOT DATE UDOT BRIDGE ENGR.

I-15; CORRIDOR IN UTAH COUNTY
800 NORTH OVERPASS IN OREM
SITUATION & LAYOUT 1

PROJECT NUMBER SP-15-6(52)241

UTAH
COUNTY

F-13W
DRG. NO.

SHT. 1 OF 26

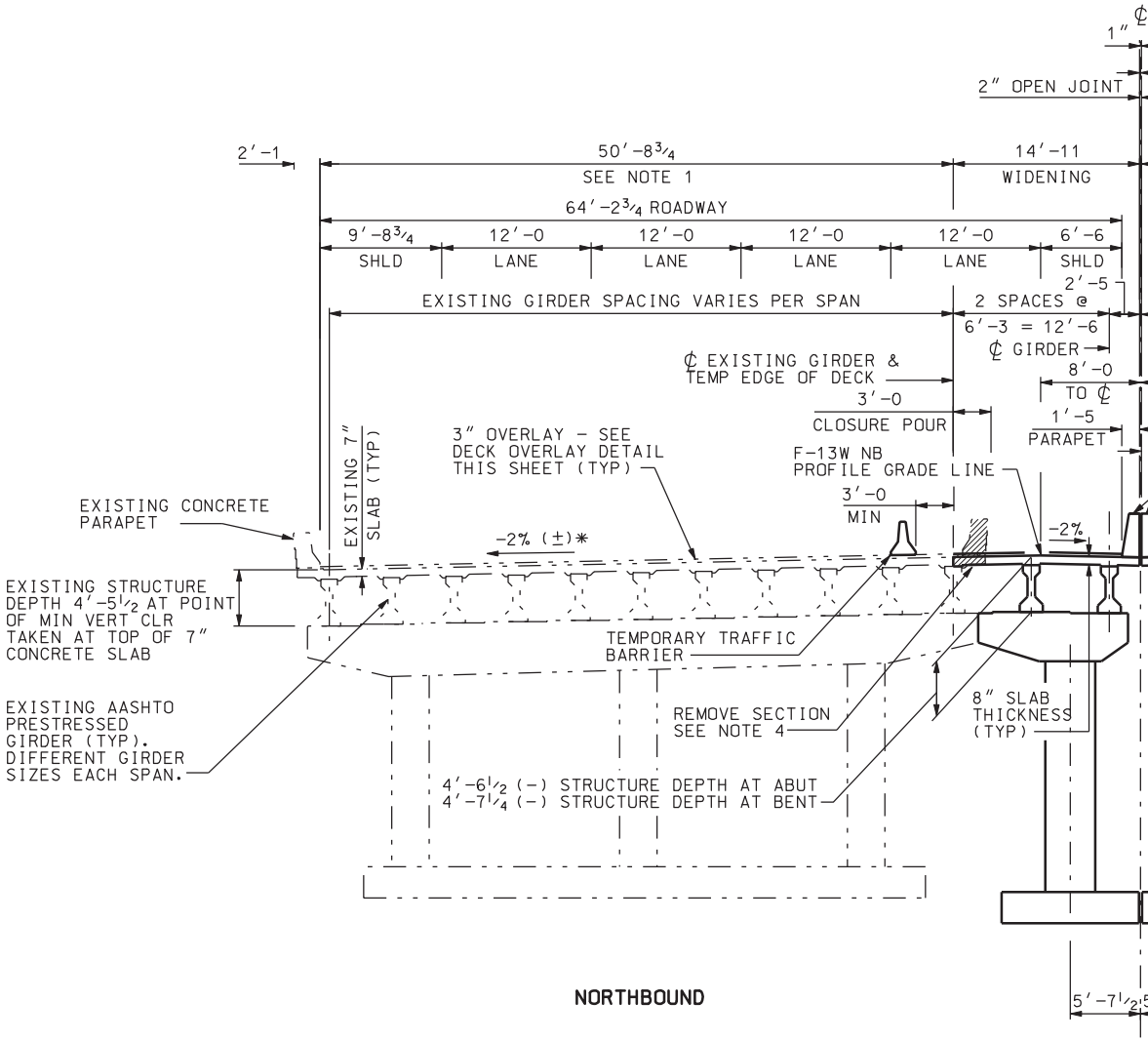


SECTIO

* MATCH EXISTIN

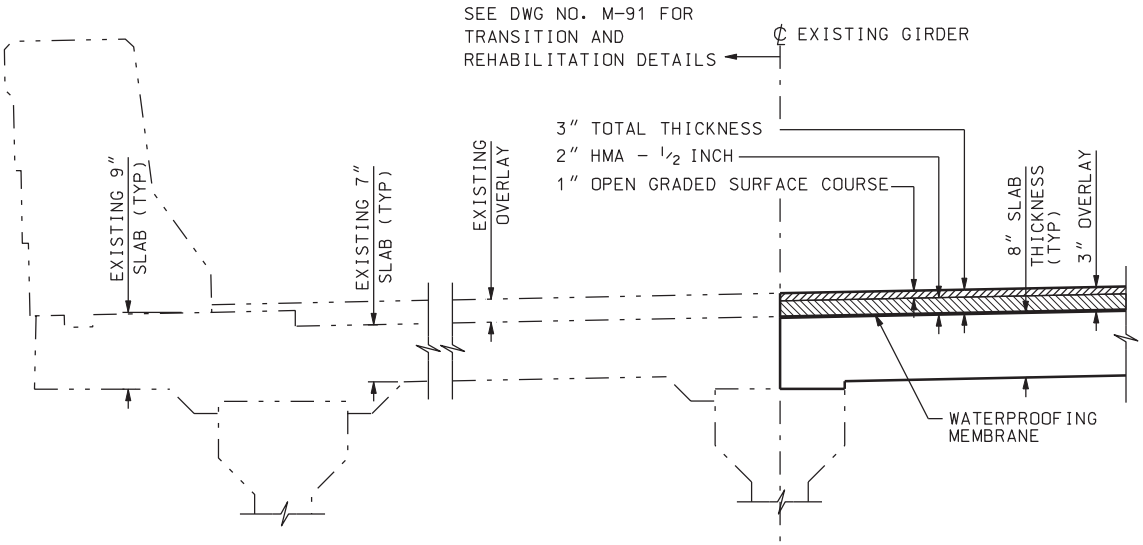


DECK OVERLAY DETAIL

DGN File:IP_PWPcdns1717\4433_F13_02.dgn

02-MAY-2005

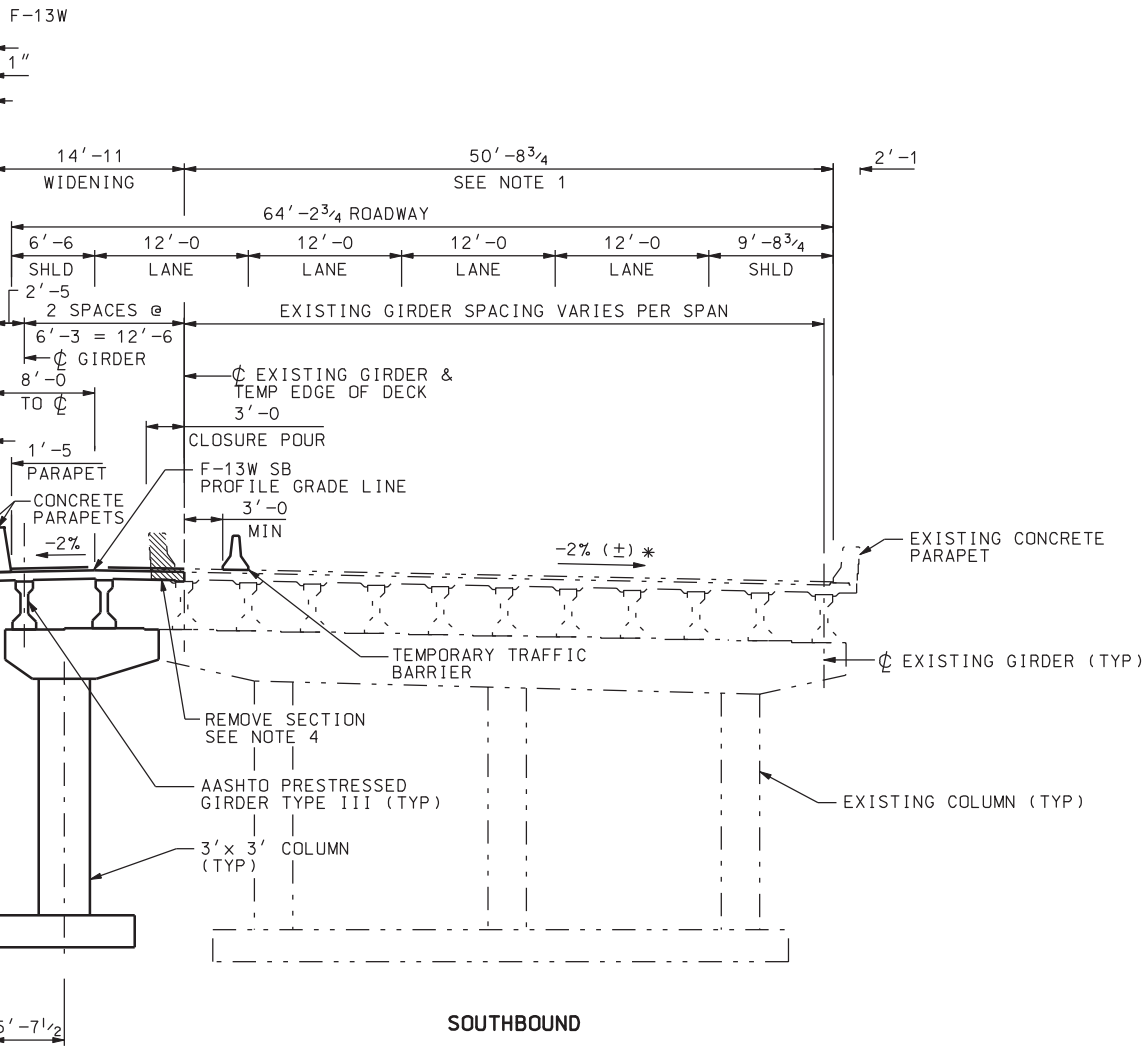


SOUTHBOUND

N A-A

NG CROSS SLOPE

## NOTES

1. PARTIALLY REMOVE EXISTING ASPHALT SURFACING OVERLAY. SEE M-91 SHEETS FOR TRANSITION AND REHABILITATION DETAILS.
2. APPLY WATER PROOFING MEMBRANE, PLACE 1" OPEN GRADED SURFACE COURSE AND 2" HMA-1/2 INCH FOR A TOTAL THICKNESS EQUAL TO 3". SEE DECK OVERLAY DETAIL AND M-91 SHEETS.
3. PROFILE GRADE LINES LOCATED 8'-0 FROM ℄ F-13W AND IS AT TOP OF NEW CONCRETE DECK.
4. SEE SPECIAL PROVISION "PREPARE BRIDGE FOR WIDENING" FOR FURTHER INSTRUCTIONS.

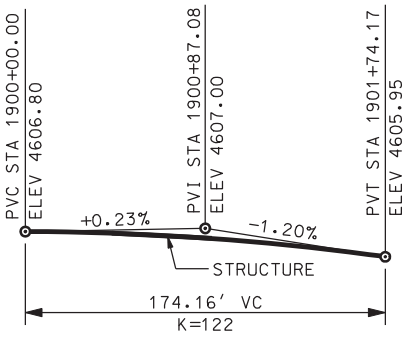


F-13W NB & SB PROFILE

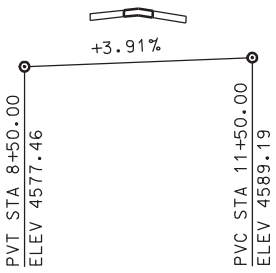


800 NORTH PROFILE (EXIST)

| NO. | DATE | BY | REMARKS |
|---|---|---|---|
| | | | |

REVISIONS

UTAH DEPARTMENT OF TRANSPORTATION
SALT LAKE CITY, UTAH
STRUCTURES DIVISION

URS

DESIGN PH 12/04 CHECK GTD 12/04
DRAWN DKH 12/04 CHECK PH 12/04
QUANT. CDT 12/04 CHECK CEL 12/04

APPROVAL RECOMM. DATE SENIOR DESIGN ENGR.
APPROVED FOR USE BY UDOT DATE UDOT BRIDGE ENGR.

I-15; CORRIDOR IN UTAH COUNTY
800 NORTH OVERPASS IN OREM
SITUATION & LAYOUT 2

PROJECT NUMBER SP-15-6(52)241

UTAH
COUNTY

F-13W
DRG. NO.

SHT. 2 OF 26

# DRILL HOLE LOG

## BORING NO. 04-1

Sheet: 1 of 1

PROJECT: I-15, CORRIDOR IN UTAH COUNTY - STRUCTURE F13 PROJECT NO.: 200401.045
CLIENT: UTAH DEPARTMENT OF TRANSPORTATION DATE: 8/2/04
LOCATION: SEE SITE PLAN: N 86279, E 212034 ELEVATION: 4583.2'
DRILLER: D. SAMPSON, A. HARTVIGSEN LOGGED BY: M.H.., V.N.B.
EQUIP./DRILL METHOD: CME-55 / N.W. CASING
DEPTH TO WATER - INITIAL: ▽ 24.8' AFTER 24 HOURS: ▽ 27.3'

| Elev. (Feet) | Depth (Feet) | Lithology | Sample Type | Rec. (In.) | Blows Per 6" & Torvane (tsf) | USCS (AASHTO) | Material Description | Dry Density, pcf | Moisture Content, % | Atter. Liquid Limit, % | Atter. Plasticity Index, % | Gradation Gravel, % | Gradation Sand, % | Gradation Silt/Clay, % | Other Tests |
|---|---|---|---|---|---|---|---|---|---|---|---|---|---|---|---|
| | | | | 14 | 7,9,7 | SM | brown, slightly moist, med. dense — 1.5" CONCRETE — SILTY SAND W/GRAVEL | | | | | | | | |
| 4580 | | | | 8 | 5,7,11 | SM (A-2-4) | brown, slightly moist, med. dense — SILTY SAND W/SOME GRAVEL | | 7.8 | | NP | 29 | 54 | 17 | |
| | 5 | | | 17 | 5,6,7 0.49 | CL-ML (A-4(8)) | lt. brown, slightly moist, med. dense — SILTY CLAY W/SAND & W/MANY SILTY SAND LENSES | | 23.4 | 26 | 5 | 0 | 18 | 82 | |
| 4575 | | | | | | ML | lt. brown | | | | | | | | |
| | 10 | | | 13 | 6,10,11 | SM | lt. brown, slightly moist, med. dense | | | | | | | | |
| 4570 | | | | 13 | 7,10,10 | SM (A-2-4) | lt. brown, slightly moist, med. dense | | 21.7 | | NP | 0 | 67 | 33 | |
| | 15 | | | 14 | 7,9,11 | SM (A-2-4) | lt. brown, moist, med. dense, w/silt lenses — SILTY FINE TO MED. SAND | | 19.2 | | NP | 0 | 74 | 26 | DS |
| 4565 | | | | | | | | | | | | | | | |
| | 20 | | | 14 | 7,12,14 | SM (A-2-4) | lt. brown, moist, med. dense | | 20.0 | | NP | 0 | 74 | 26 | |
| 4560 | | | | | | | | | | | | | | | |
| | 25 | | | 12 | 6,9,12 | SP-SM (A-3) | lt. brown, moist, med. dense — POORLY GRADED SAND W/SILT | | 21.0 | | NP | 0 | 94 | 6 | |
| 4555 | | | | | | | | | | | | | | | |
| | 30 | | | 15 | 8,16,14,16 | SM | lt. brown, moist, med. dense — SILTY SAND | | | | | | | | |

# DRILL HOLE LOG

## BORING NO. 04-3

Sheet: 1 of 1

| Elev. (Feet) | Depth (Feet) | Lithology | Type | Rec. (In.) |
|---|---|---|---|---|
| 4605 | | | | 15 |
| | 5 | | | 10 |
| 4600 | | | | |
| 4595 | 10 | | | 12 |
| | | | | 14 |
| 4590 | 15 | | | |
| | | | | 14 |
| 4585 | 20 | | | 14 |
| | | | | 13 |
| 4580 | 25 | | | 13 |
| | | | | 15 |
| 4575 | 30 | | | 14 |

# DRILL HOLE LOG

## BORING NO. 04-2

Sheet: 1 of 1

PROJECT: I-15, CORRIDOR IN UTAH COUNTY - STRUCTURE F13 PROJECT NO.: 200401.045
CLIENT: UTAH DEPARTMENT OF TRANSPORTATION DATE: 8/2/04
LOCATION: SEE SITE PLAN: N ~86345, E ~212015 ELEVATION: ~4582.5'
DRILLER: D. SAMPSON, A. HARTVIGSEN LOGGED BY: M.H.., V.N.B.
EQUIP./DRILL METHOD: CME-55 / N.W. CASING
DEPTH TO WATER - INITIAL: ▽ 24.8' AFTER 24 HOURS: ▽ 25.1'

| Elev. (Feet) | Depth (Feet) | Lithology | Sample Type | Rec. (In.) | Blows Per 6" & Torvane (tsf) | USCS (AASHTO) | Material Description | Dry Density, pcf | Moisture Content, % | Atter. Liquid Limit, % | Atter. Plasticity Index, % | Gradation Gravel, % | Gradation Sand, % | Gradation Silt/Clay, % | Other Tests |
|---|---|---|---|---|---|---|---|---|---|---|---|---|---|---|---|
| | | | | 11 | 7,7,3 | SM | med. brown, moist, loose — 2" CONCRETE — SILTY SAND W/GRAVEL | | | | | | | | |
| 4580 | | | | 11 | 12,10,7 | SM ML (A-4(6)) | lt. brown, slightly moist, med. dense — SANDY SILT W/CLAY LENSES | | 17.9 | | NP | 0 | 35 | 65 | |
| | 5 | | | 14 | 6,8,12 | SM (A-2-4) | lt. brown, slightly moist, med. dense, w/trace of clay lenses | | 15.6 | | NP | 0 | 73 | 27 | |
| 4575 | | | | | | | | | | | | | | | |
| | 10 | | | 13 | 9,11,13 | SP-SM (A-3) | lt. brown, slightly moist, med. dense | | 20.1 | | NP | 0 | 89 | 11 | |
| 4570 | | | | - | 6,9,12 | SM | lt. brown, slightly moist, med. dense — POORLY GRADED SAND W/SILT | | | | | | | | |
| | 15 | | | - | Pushed | SM | | | | | | | | | |
| 4565 | | | | 16 | 7,9,12,16 | SM | lt. brown, slightly moist, med. dense, w/few silty clay lenses | | | | | | | | |
| | 20 | | | 11 | 7,12,16 | SP-SM (A-3) | lt. brown, moist to wet, med. dense — POORLY GRADED FINE TO MED. SAND W/SILT | | 17.1 | | NP | 0 | 89 | 11 | |
| 4560 | | | | | | | | | | | | | | | |
| | 25 | | | | | | lt. brown | | | | | | | | |
| | | | | 12 | 7,6,7 | ML,SM | lt. brown, wet, stiff, med. dense — INTERBEDDED SILT & SILTY SAND mostly silt | | | | | | | | |
| 4555 | | | | | | | | | | | | | | | |
| | 30 | | | 12 | 7,12,15 | SM | lt. brown, wet, med. dense — SILTY SAND | | | | | | | | |
| 4550 | | | | | | | | | | | | | | | |
| | 35 | | | 20 | 3,4,10,14 | ML SM | lt. brown, wet, soft to firm — VERY FINE SANDY SILT W/SAND LENSES | | | | | | | | |
| | | | | | | | SILTY SAND | | | | | | | | |

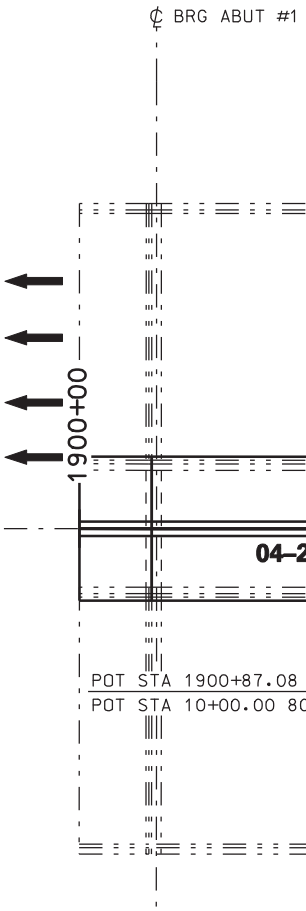


DGN File: IP_PWPdms1717\4433_F13_03.dgn

02-MAY-2005

PROJECT: I-15, CORRIDOR IN UTAH COUNTY - STRUCTURE F13 PROJECT NO.: 200401.045
CLIENT: UTAH DEPARTMENT OF TRANSPORTATION DATE: 8/9/04
LOCATION: SEE SITE PLAN: N 86221, E 212022 ELEVATION: 4605.5'
DRILLER: D. SAMPSON, A. HARTVIGSEN LOGGED BY: M.H.., V.N.B.
EQUIP./DRILL METHOD: CME-55 / N.W. CASING
DEPTH TO WATER - INITIAL: ▽ DRY AFTER 24 HOURS: ▽ NOT MEASURED

| SAMPLE Blows per 6" & Torvane (tsf) | USCS (AASHTO) | Material Description | Dry Density, pcf | Moisture Content, % | Atter. Liquid Limit, % | Atter. Plasticity Index, % | Gradation Gravel, % | Gradation Sand, % | Gradation Silt/Clay, % | Other Tests |
|---|---|---|---|---|---|---|---|---|---|---|
| 5,9,7 | SM | lt. & med. brown, dry, med. dense — SILTY SAND W/SOME GRAVEL & CLAY LENSES | | | | | | | | |
| 7,8,8 | SM (A-2-4) | interbedded lt. & med. brown, dry to slightly moist, med. dense — SILTY SAND W/GRAVEL | | 6.3 | | NP | 28 | 50 | 22 | |
| 19,25,22 | SM | mottled lt. & med. brown, slightly moist to dry, med. dense, w/some clay lumps | | | | | | | | |
| 19,26,24 | SM | mottled lt. & med. brown, slightly moist to dry, dense | | | | | | | | |
| 24,32,50 | SM (A-3) | lt. & dk. brown, slightly moist, very dense, trace of gravel — SILTY SAND | | 13.1 | | NP | 8 | 71 | 21 | |
| 16,18,17 | SM (A-3) | med. brown, moist, dense | | 15.0 | | NP | 3 | 85 | 12 | |
| 6,6,9 | SM | med. brown, slightly moist, med. dense (fill?) | | | | | | | | |
| 5,8,11 | SM | lt. brown, slightly moist to dry, med. dense, w/white stringers | | | | | | | | |
| 7,8,10 | SM | lt. brown, wet, med. dense, w/rusty lenses — VERY SILTY VERY FINE SAND | | | | | | | | |
| 6,8,13 | SM | lt. brown, moist, med. dense, w/few silt lenses | | | | | | | | |

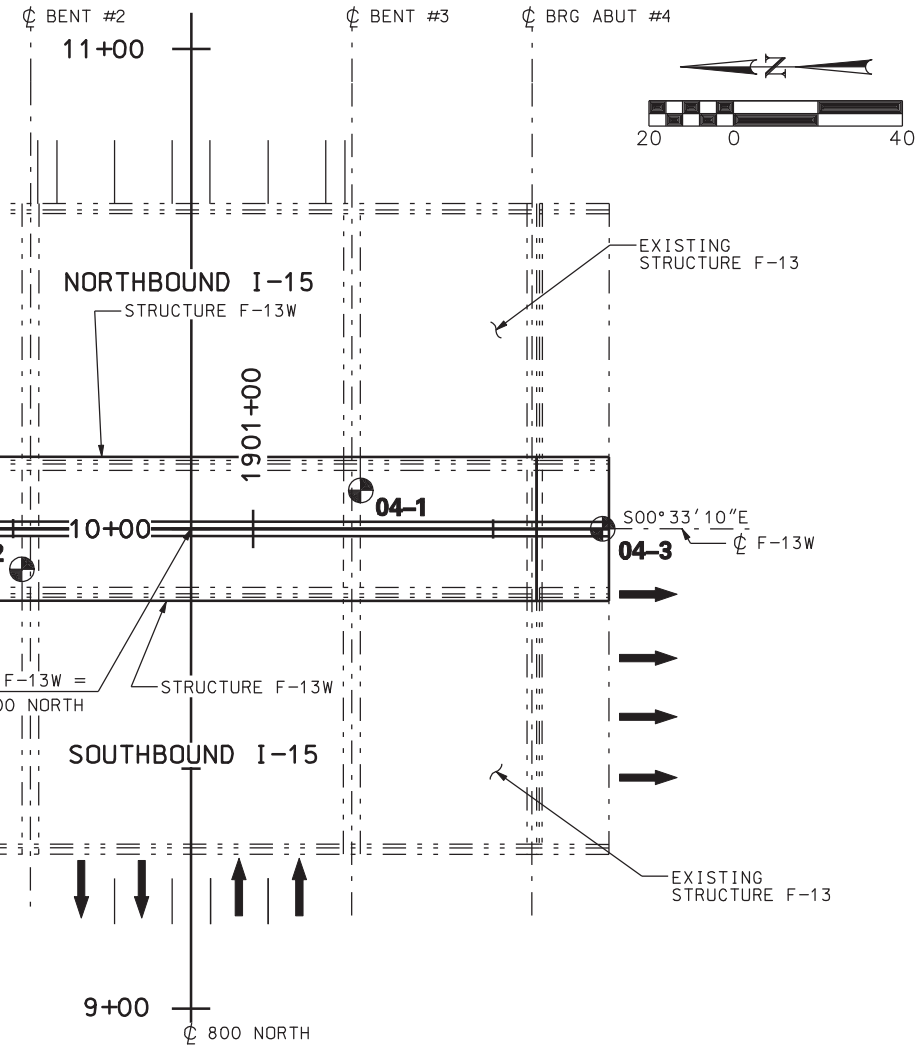


LOCATION PLAN

# KEY TO BORING LOG

## SYMBOLS

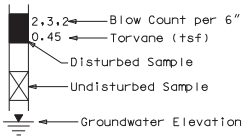


UC = Unconfined Compression Test
CT = Consolidation Test
SG = Specific Gravity Test
DS = Direct Shear Test

## RELATIVE DENSITY (NON-PLASTIC - SAND & SILT)

VERY LOOSE N<4
LOOSE N 4-10
MED DENSE N 10-30
DENSE N 30-50
VERY DENSE N>50

## CONSISTENCY (PLASTIC - SILT & CLAY)

VERY SOFT N<2
SOFT N 2-4
MEDIUM STIFF N 4-8
STIFF N 8-15
VERY STIFF N 15-30
HARD N>30

## GENERAL NOTES

1. THE SUBSURFACE EXPLORATIONS SHOWN WERE CONDUCTED BETWEEN 08-02-04 AND 08-09-04 BY RB&G ENGINEERING, INC..
2. THESE BORING LOGS REPRESENT A SYNOPSIS OF THE SOIL DEPOSITS ENCOUNTERED WITHIN EACH BORING AND ARE BASED ON SOUND GEOLOGICAL AND ENGINEERING JUDGMENT. BECAUSE SOIL IS A COMPLEX MEDIUM, THESE BORING LOGS MAY OR MAY NOT REPRESENT THE SOIL CONDITIONS AT THIS SITE. THIS SUBSURFACE INTERPRETATION IS PRESENTED IN GOOD FAITH AND IS NOT INTENDED AS A SUBSTITUTE FOR PERSONAL INVESTIGATION AND JUDGEMENT OF THE CONTRACTOR.
3. THE WATER LEVELS AND CONDITIONS INDICATED ON THE BORING LOGS REPRESENT HOLE CONDITIONS ON THE DATE SHOWN, HOWEVER, IT SHOULD BE NOTED, THAT AT LOCATIONS AWAY FROM THE BORINGS OR AT ANOTHER TIME THE WATER LEVELS AND CONDITIONS MAY VARY SIGNIFICANTLY.
4. THE STRATIFICATION LINES REPRESENT THE APPROXIMATE BOUNDARIES BETWEEN SOIL TYPES AND THE TRANSITION MAY BE GRADUAL.
5. COBBLE - A ROCK WITH AN AVERAGE DIMENSION BETWEEN 3 INCHES AND 12 INCHES
6. BOULDER - A ROCK WITH AN AVERAGE DIMENSION OF 12 INCHES OR GREATER

NOTE: DRILL RIG USED - CME 55 HAMMER E=0.75

GEOTECHNICAL ENGINEER

| NO. | DATE | BY | REMARKS |
|---|---|---|---|
| | | | |

REVISIONS

UTAH DEPARTMENT OF TRANSPORTATION
SALT LAKE CITY, UTAH
STRUCTURES DIVISION

URS

DESIGN BDP 8/04 CHECK VNB 10/04
DRAWN JPN 10/04 CHECK BEP 10/04
QUANT. CHECK

APPROVAL RECOMM. DATE SENIOR DESIGN ENGR.
APPROVED FOR USE BY UDOT DATE UDOT BRIDGE ENGR.

I-15; CORRIDOR IN UTAH COUNTY
800 NORTH OVERPASS IN OREM
SOIL DATA SHEET
PROJECT NUMBER SP-15-6(52)241

UTAH COUNTY
F-13W DRG. NO.
SHT. 3 OF 26

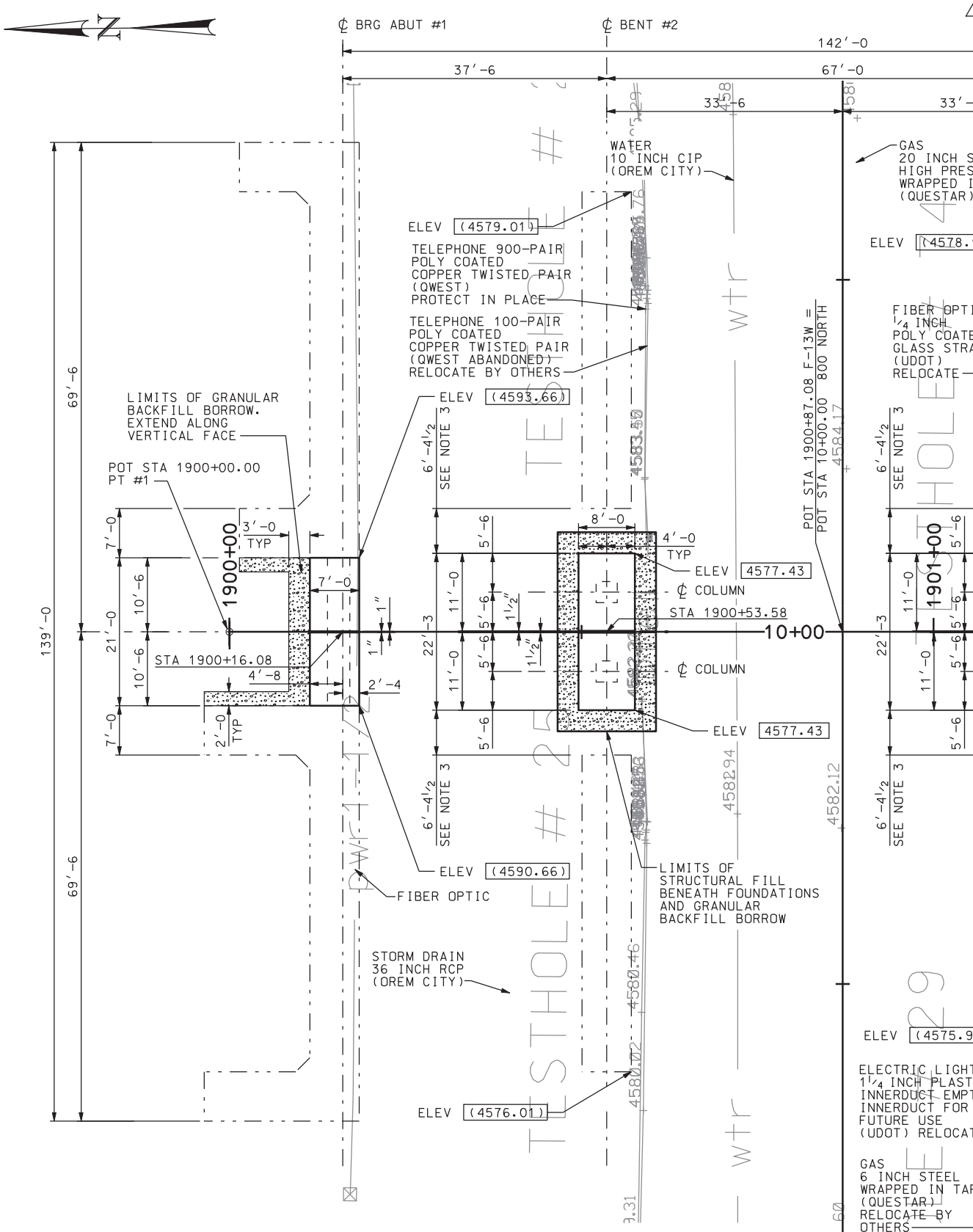


## GRANULAR BACKFILL BORROW QUANTITIES

| LOCATION | UNITS |
|---|---|
| ABUTMENTS | 79.0 CU YDS |
| BENTS | 48.3 CU YDS |

## STRUCTURAL FILL BENEATH FOUNDATIONS QUANTITIES

| LOCATION | UNITS |
|---|---|
| BENTS | 117.2 CU YDS |

## FOUNDATION PLAN

DGN File:IP_PWPcdns1717\4433_F13_04.dgn

02-MAY-2005

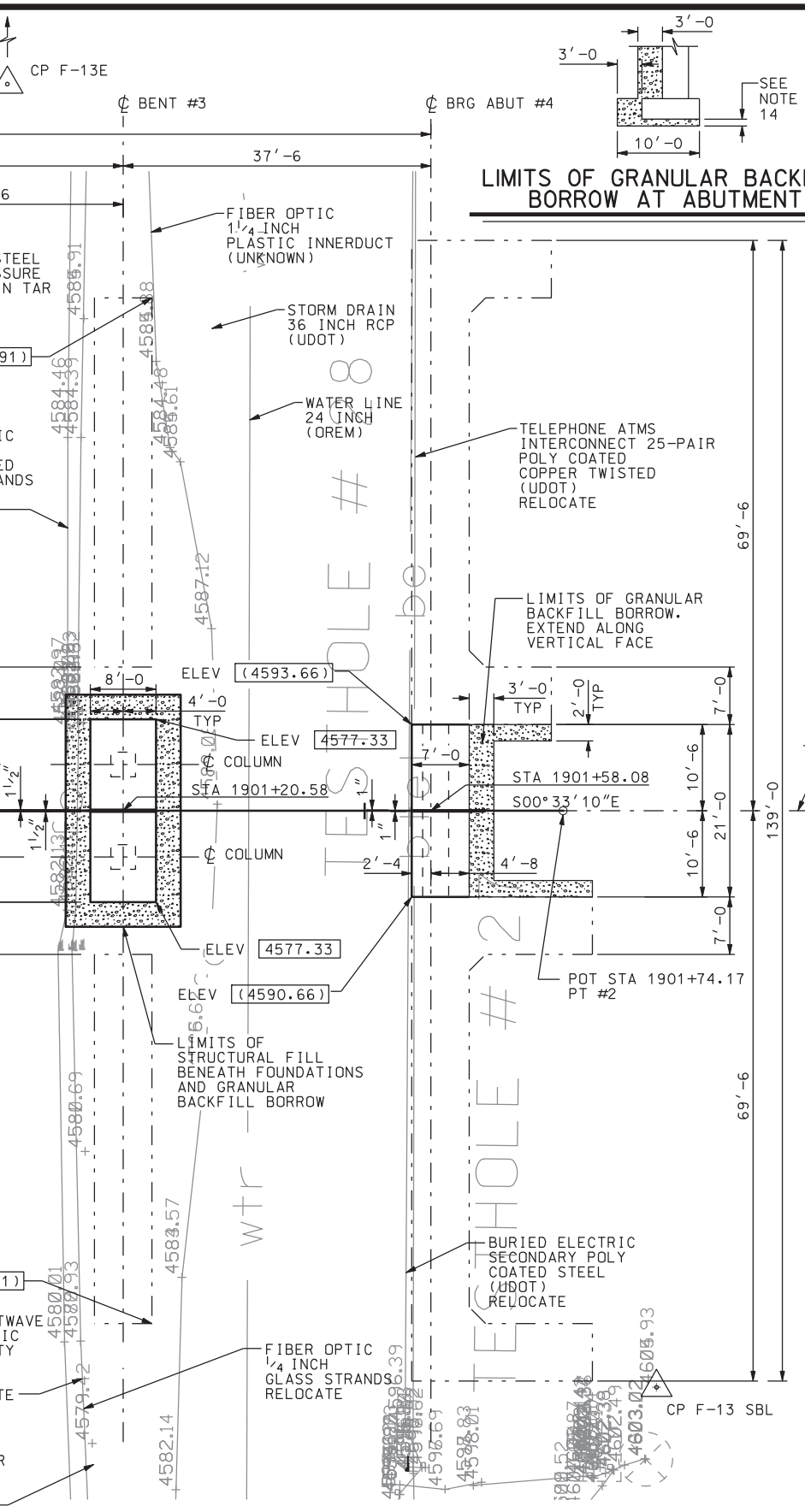





## LIMITS OF GRANULAR BACKFILL BORROW AT ABUTMENT

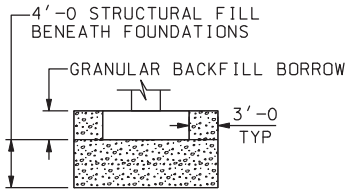


## LIMITS OF STRUCTURAL FILL BENEATH FOUNDATIONS AND GRANULAR BACKFILL BORROW AT BENT

(EACH DIRECTION)

## NOTES

1. ALL BENTS AND ABUTMENTS ARE PARALLEL TO BEARING S89°26'50"W.
2. ELEVATIONS AT THE BOTTOM OF FOOTING ARE SHOWN ENCLOSED IN RECTANGLES. E.G. 4534.40. ELEVATIONS SHOWN IN (FEET) ARE APPROXIMATE EXISTING BOTTOM OF FOOTING ELEVATIONS BASED ON SURVEY DATA.
3. DIMENSIONS TO EXISTING FOUNDATIONS ARE APPROXIMATE AND BASED ON EXISTING PLANS.
4. LOCATE ℄ NEW BENT AS AN EXTENSION OF THE BEARING ALONG ℄ OF EXISTING BENT.
5. ALIGN FRONT FACE OF ABUTMENT WALL WITH FRONT FACE OF EXISTING ABUTMENT WALL.
6. USE BRACED EXCAVATION OR WALL SYSTEM ADJACENT TO EXISTING BENTS WHERE SLOPES STEEPER THAN 1H:1V ARE NECESSARY. DO NOT USE BRACING OR WALLS THAT REQUIRE DRIVING, VIBRATION, OR OTHER ACTIONS THAT MAY DISTURB OR UNDERMINE EXISTING FOOTINGS.
7. PROVIDE BRACED EXCAVATION AT TOE OF ABUTMENT FILL AS NECESSARY DURING CONSTRUCTION.
8. BACFILL BEHIND ABUTMENT NOT TO BE PLACED HIGHER THAN FILL IN FRONT OF THE ABUTMENT UNTIL SUPERSTRUCTURE IS IN PLACE. AFTER SUPERSTRUCTURE IS PLACED. BACKFILL TO BE PLACED UNIFORMLY AT BOTH ABUTMENTS TO EQUALIZE WALL PRESSURE.
9. POTHOLE TO 5 FEET ADJACENT TO FOOTING. WHERE COHESIVE MATERIALS ARE ENCOUNTERED REFER TO NOTE 12.
10. AT ABUTMENTS, SOIL BEARING PRESSURE, Qr (STR. I) = 12.3 KSF.
11. AT BENTS SOIL BEARING PRESSURE, Qr (STR. I) = 13.2 KSF.
12. FINAL DEPTH OF EXCAVATION BENEATH SPREAD FOOTINGS TO BE INSPECTED AND APPROVED BY ENGINEER TO ENSURE THAT LESS COMPETENT SOILS ARE COMPLETELY REMOVED. MINIMUM EXCAVATION WIDTH EQUAL TO FOOTING WIDTH PLUS OVEREXCAVATION DEPTH PLUS 2 FEET. REPLACE OVEREXCAVATED MATERIAL WITH STRUCTURAL FILL TO FOOTING LEVEL IN ACCORDANCE WITH SPECIAL PROVISION 02056S.
13. UTILITIES DESIGNATED AS "RELOCATE" ARE THE DESIGN-BUILD RESPONSIBILITY OF THE CONTRACTOR. REFER TO UTILITY RELOCATION (DESIGN-BUILD) SPECIFICATION 00728S. SEE UT-11 FOR UTILITIES DATA NOT SHOWN.
14. FOR SPREAD FOOTINGS PLACED ON EXISTING SUBGRADE MATERIAL, SCARIFY THE UPPER 10 INCHES BELOW THE FOOTING ELEVATION, MOISTURE CONDITION, AND RECOMPACT TO AT LEAST 96% OF THE MAXIMUM LABORATORY DENSITY AS REQUIRED BY UDOT STANDARD SPECIFICATIONS SECTION 02324.

CONTROL POINT DATA

| CP # | COORDINATES | | ELEVATION |
|---|---|---|---|
| | E | N | |
| F-13E | 212,379.24 | 86,363.34 | 4597.00 |
| F-13W | 211,628.97 | 86,265.26 | 4566.58 |
| F-13 SBL | 211,953.53 | 86,215.34 | 4604.93 |
| PT #1 | 212,021.93 | 86,401.59 | |
| PT #2 | 212,023.61 | 86,227.43 | |

| NO. | DATE | BY | REMARKS |
|---|---|---|---|
| | | | |

REVISIONS

UTAH DEPARTMENT OF TRANSPORTATION
SALT LAKE CITY, UTAH
STRUCTURES DIVISION

URS

DESIGN PH 12/04 CHECK GTD 12/04
DRAWN DKH 12/04 CHECK PH 12/04
QUANT. CDT 12/04 CHECK CEL 12/04

APPROVAL RECOMM. DATE SENIOR DESIGN ENGR.
APPROVED FOR USE BY UDOT DATE UDOT BRIDGE ENGR.

I-15; CORRIDOR IN UTAH COUNTY
800 NORTH OVERPASS IN OREM
FOUNDATION PLAN

PROJECT NUMBER SP-15-6(52)241

UTAH
COUNTY

F-13W
DRG. NO.

SHT. 4 OF 26

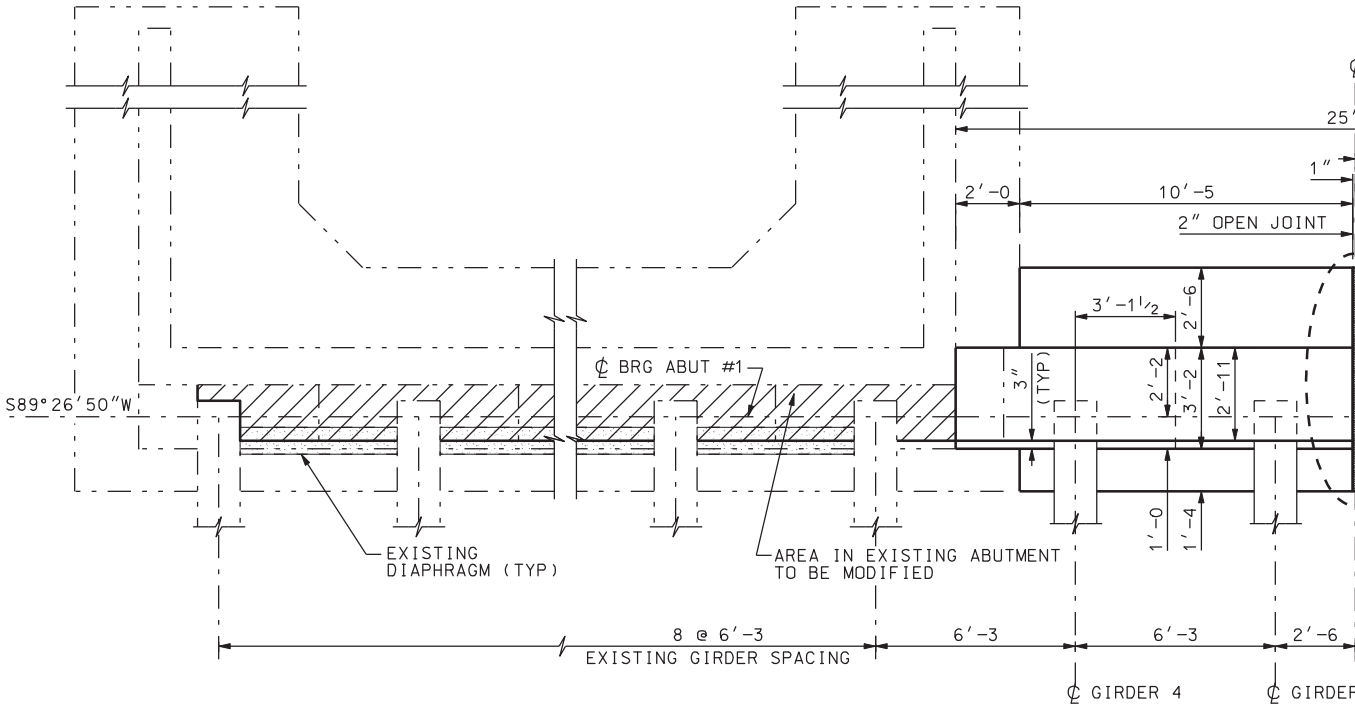


PL

(DECK NO

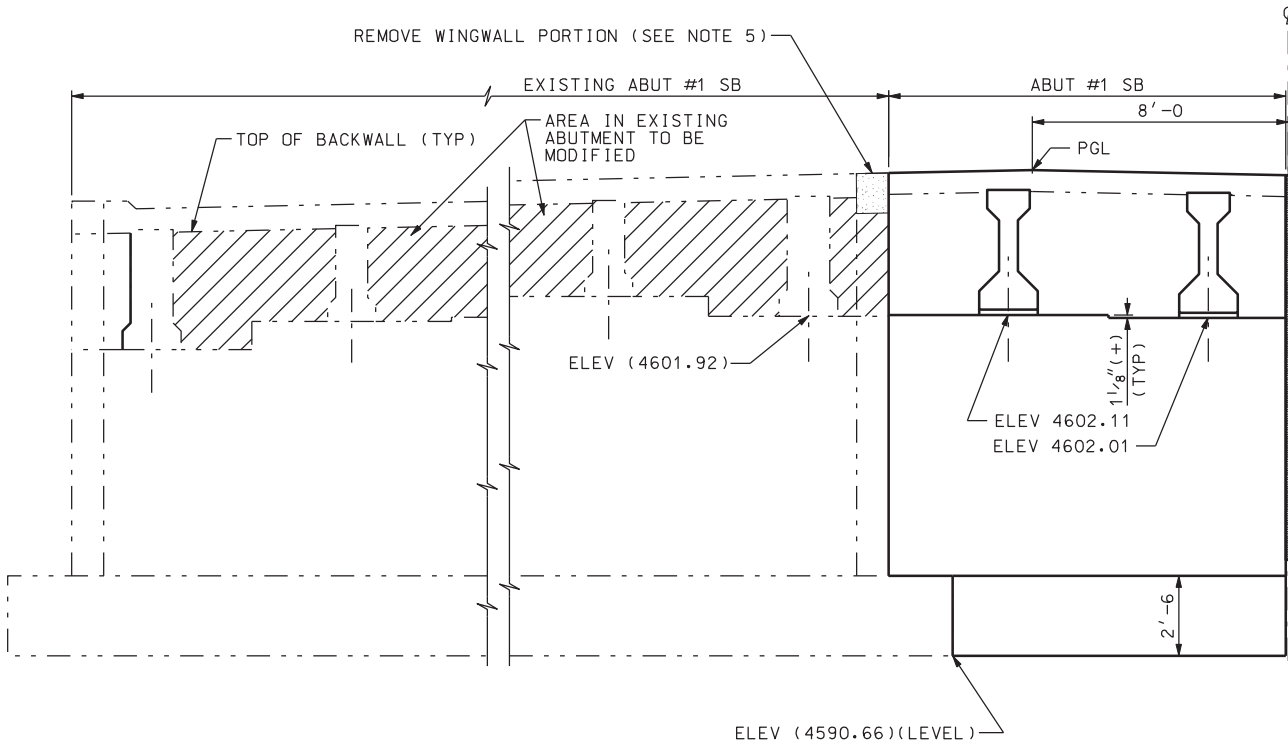


ELEV

LOOKING
(PARAPET

## CONCRETE QUANTITIES

| LOCATION | ABUT #1 | UNITS |
|---|---|---|
| FOOTING | 13.5 | CU YDS |
| STEM | 21.7 | CU YDS |
| DIAPHRAGM | 10.3 | CU YDS |
| MODIFIED DIAPHRAGM | 19.5 | CU YDS |
| TOTAL | 65.0 | CU YDS |

DGN File:IP_PWPcdms1717\4433_F13_05.dgn
02-MAY-2005

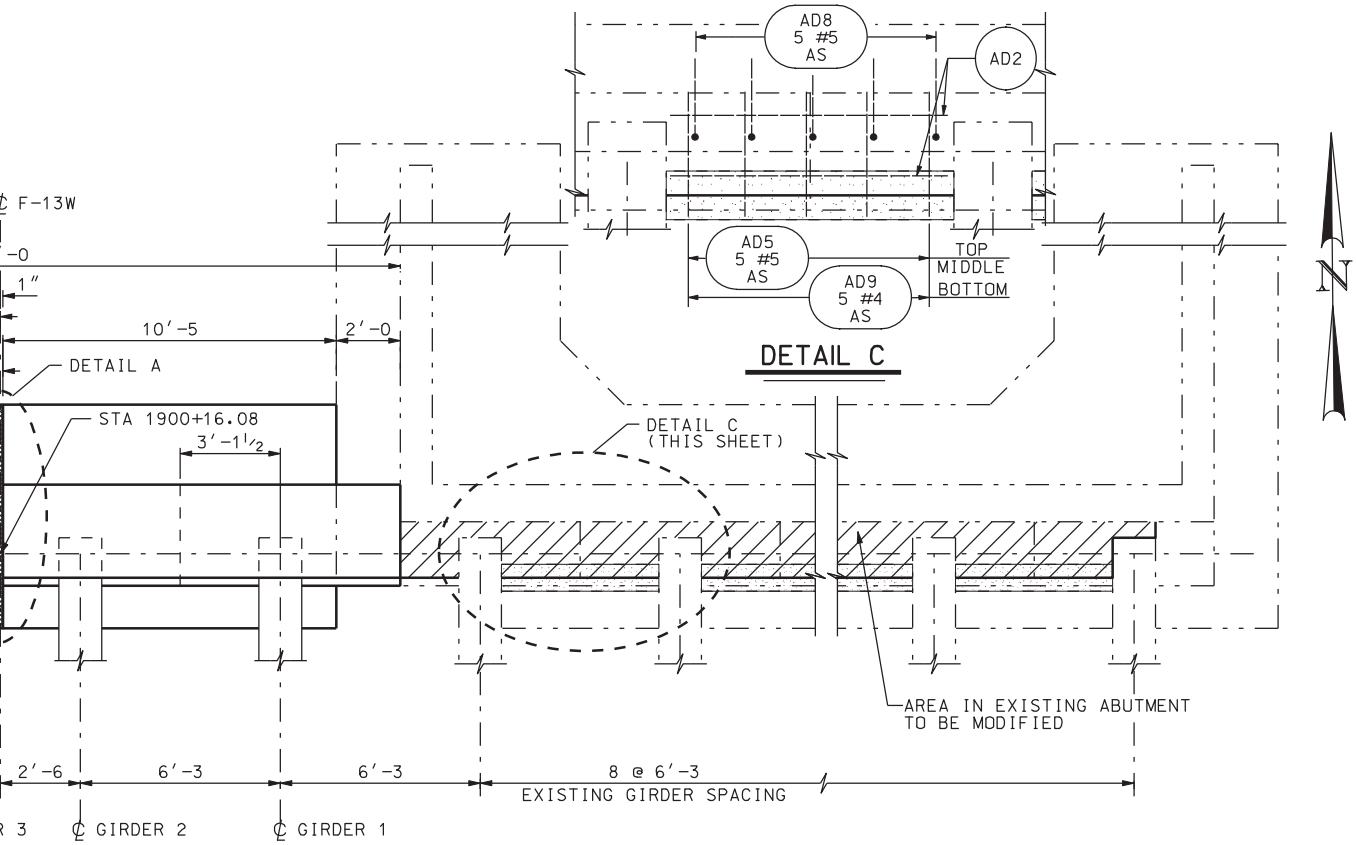


AN

T SHOWN)

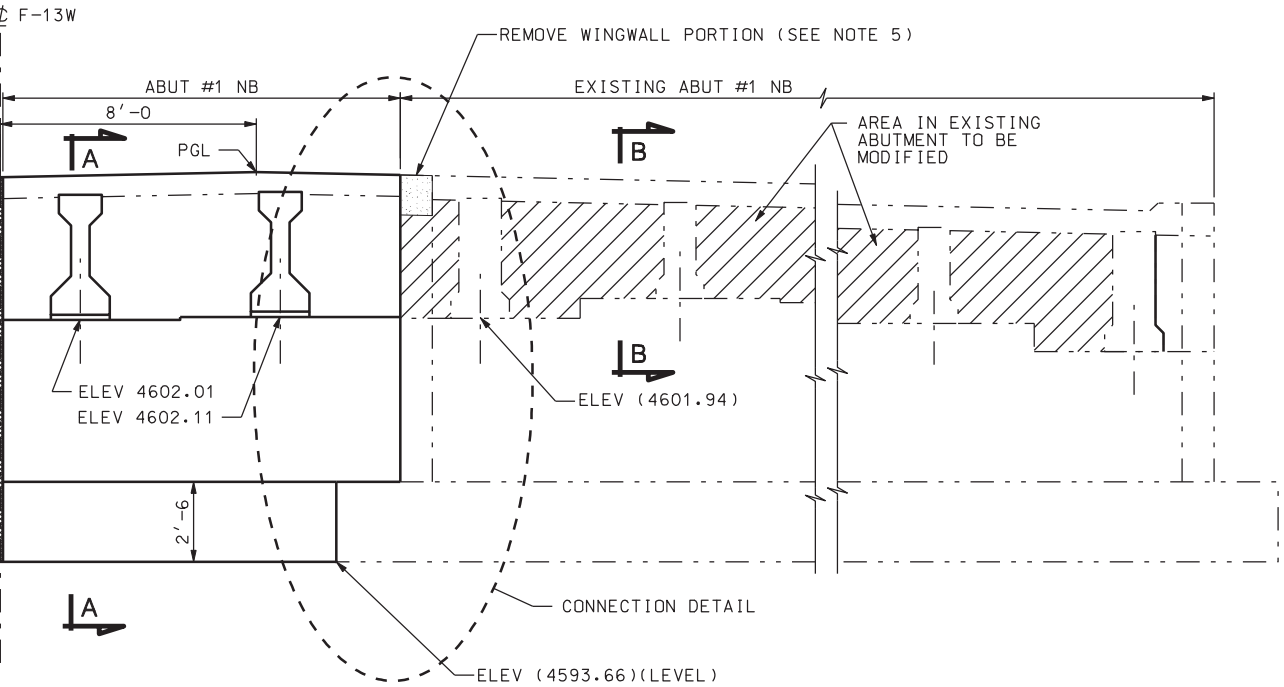


VATION

BACKSTATION
NOT SHOWN)

## NOTES

1. FOR SECTION A-A, SECTION B-B, DETAIL A AND CONNECTION DETAIL, SEE "ABUTMENT DETAILS" SHEET.
2. FOR BEARING DETAILS SEE "DIAPHRAGM AND BEARING DETAILS" SHEET.
3. FINISH BRIDGE SEAT BEARING AREA (2" LARGER THAN BEARING PAD) HIGH AND RUBBED OR GRIND LEVEL TO ELEVATION SHOWN ± ⅛". NO GROUTING ALLOWED.
4. FIGURES SHOWN IN PARENTHESIS ARE APPROXIMATE (FEET) BASED ON SURVEY INFORMATION.
5. REMOVE PARTIAL WINGWALL 1'-6 MIN. PROVIDE 6" MIN OF RIGID PLASTIC FOAM BETWEEN TOP OF EXISTING WINGWALL AND BOTTOM OF APPROACH SLAB.
6. ALIGN FRONT FACE OF ABUTMENT WALL WITH FRONT FACE OF EXISTING ABUTMENT WALL.

| NO. | DATE | BY | REMARKS |
|---|---|---|---|

REVISIONS

UTAH DEPARTMENT OF TRANSPORTATION
SALT LAKE CITY, UTAH
STRUCTURES DIVISION

URS

DESIGN PH 12/04 CHECK GTD 12/04
DRAWN DKH 12/04 CHECK PH 12/04
QUANT. CDT 12/04 CHECK CEL 12/04

APPROVAL RECOMM. DATE SENIOR DESIGN ENGR.
APPROVED FOR USE BY UDOT DATE UDOT BRIDGE ENGR.

I-15; CORRIDOR IN UTAH COUNTY
800 NORTH OVERPASS IN OREM
ABUTMENT #1 PLAN & ELEVATION
PROJECT NUMBER SP-15-6(52)241

UTAH
COUNTY

F-13W
DRG. NO.

SHT. 5 OF 26

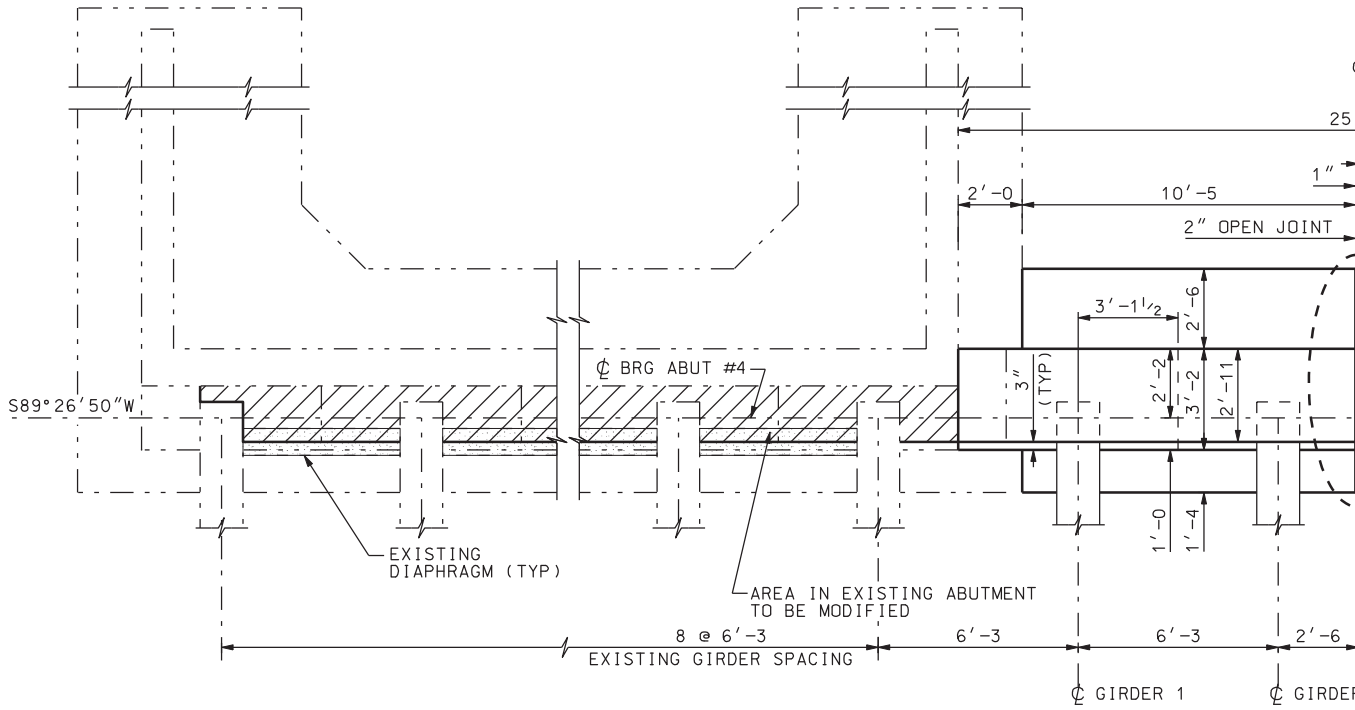


PL

(DECK NO

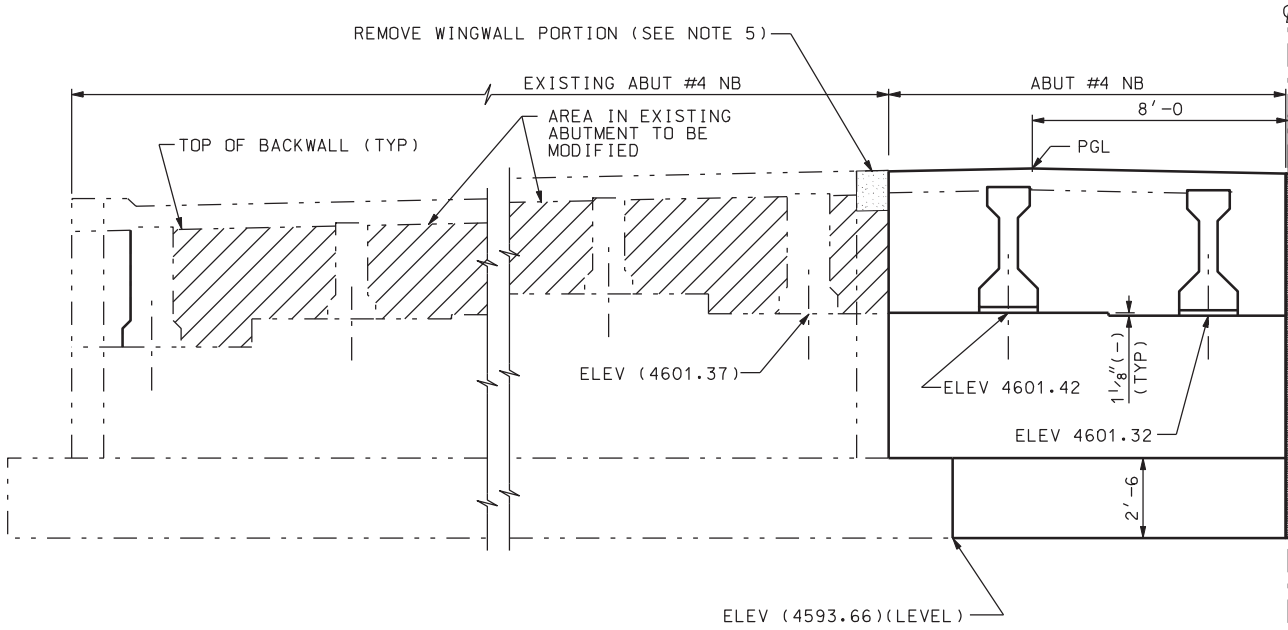


ELEV

LOOKING
(PARAPET

## CONCRETE QUANTITIES

| LOCATION | ABUT #4 | UNITS |
|---|---|---|
| FOOTING | 13.5 | CU YDS |
| STEM | 19.7 | CU YDS |
| DIAPHRAGM | 10.3 | CU YDS |
| MODIFIED DIAPHRAGM | 19.5 | CU YDS |
| TOTAL | 63.0 | CU YDS |

DGN File:IP_PWPcdms1717\4433_F13_06.dgn
02-MAY-2005

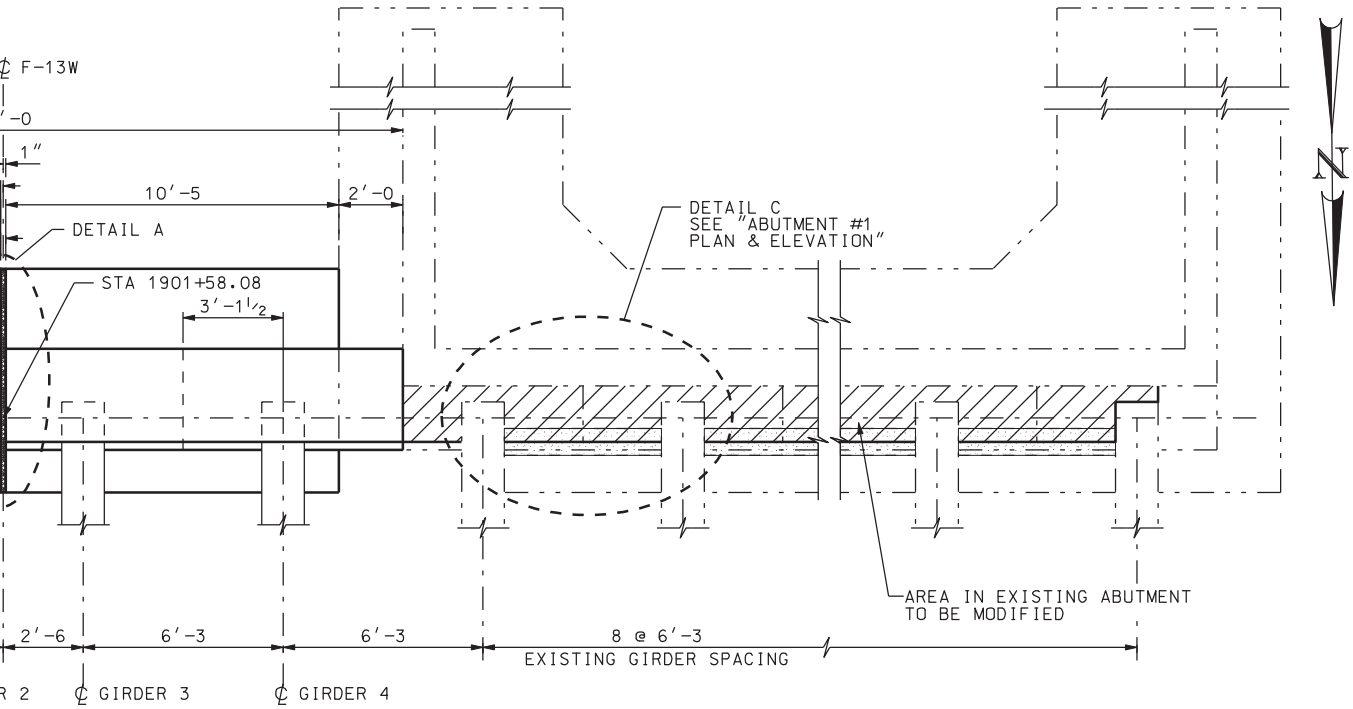


AN

OT SHOWN)

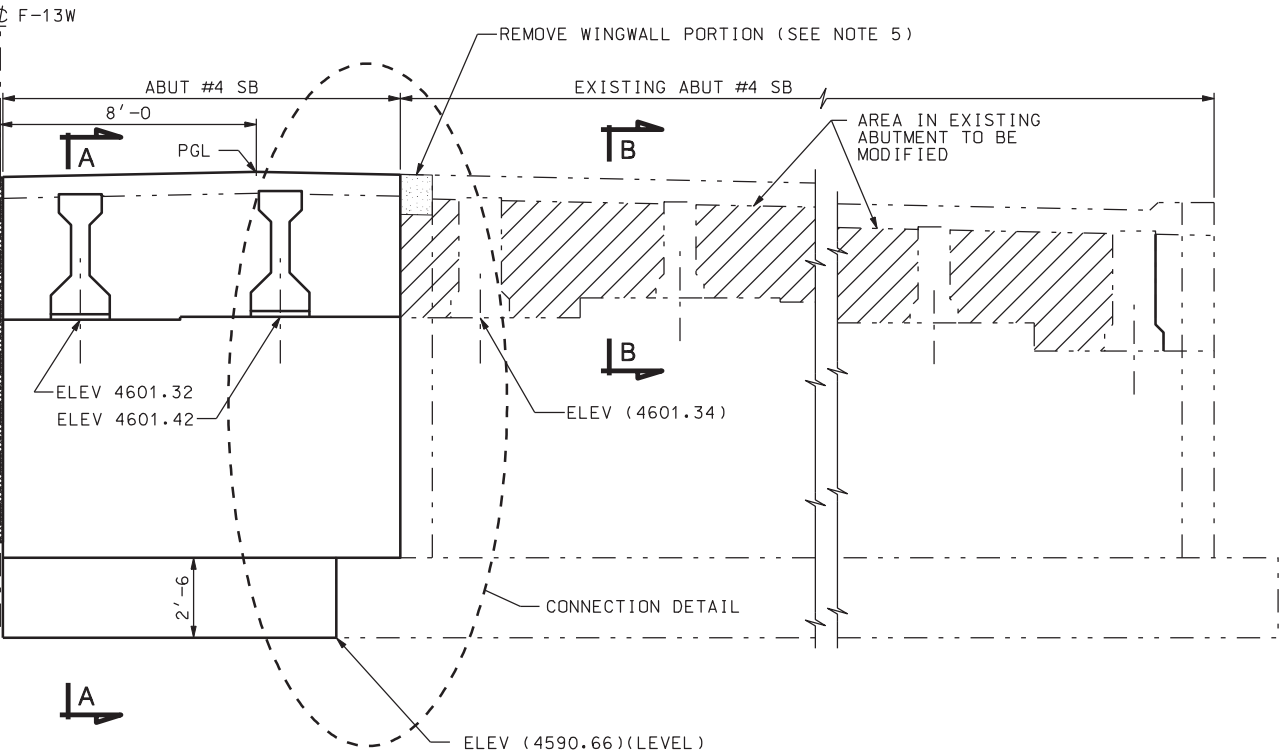


ATION

UPSTATION
NOT SHOWN)

## NOTES

1. FOR SECTION A-A, SECTION B-B, DETAIL A AND CONNECTION DETAIL, SEE "ABUTMENT DETAILS" SHEET.
2. FOR BEARING DETAILS SEE "DIAPHRAGM AND BEARING DETAILS" SHEET.
3. FINISH BRIDGE SEAT BEARING AREA (2" LARGER THAN BEARING PAD) HIGH AND RUBBED OR GRIND LEVEL TO ELEVATION SHOWN ± ⅛". NO GROUTING ALLOWED.
4. FIGURES SHOWN IN PARENTHESIS ARE APPROXIMATE (FEET) BASED ON SURVEY INFORMATION.
5. REMOVE PARTIAL WINGWALL 1'-6 MIN. PROVIDE 6" MIN OF RIGID PLASTIC FOAM BETWEEN TOP OF EXISTING WINGWALL AND BOTTOM OF APPROACH SLAB.
6. ALIGN FRONT FACE OF ABUTMENT WALL WITH FRONT FACE OF EXISTING ABUTMENT WALL.

| NO. | DATE | BY | REMARKS |
|---|---|---|---|

REVISIONS

UTAH DEPARTMENT OF TRANSPORTATION
SALT LAKE CITY, UTAH
STRUCTURES DIVISION

URS

DESIGN PH 12/04 CHECK GTD 12/04
DRAWN DKH 12/04 CHECK PH 12/04
QUANT. CDT 12/04 CHECK CEL 12/04

APPROVAL RECOMM. DATE SENIOR DESIGN ENGR.
APPROVED FOR USE BY UDOT DATE UDOT BRIDGE ENGR.

I-15; CORRIDOR IN UTAH COUNTY
800 NORTH OVERPASS IN OREM
ABUTMENT #4 PLAN & ELEVATION

PROJECT NUMBER SP-15-6(52)241

UTAH
COUNTY

F-13W
DRG. NO.

SHT. 6 OF 26

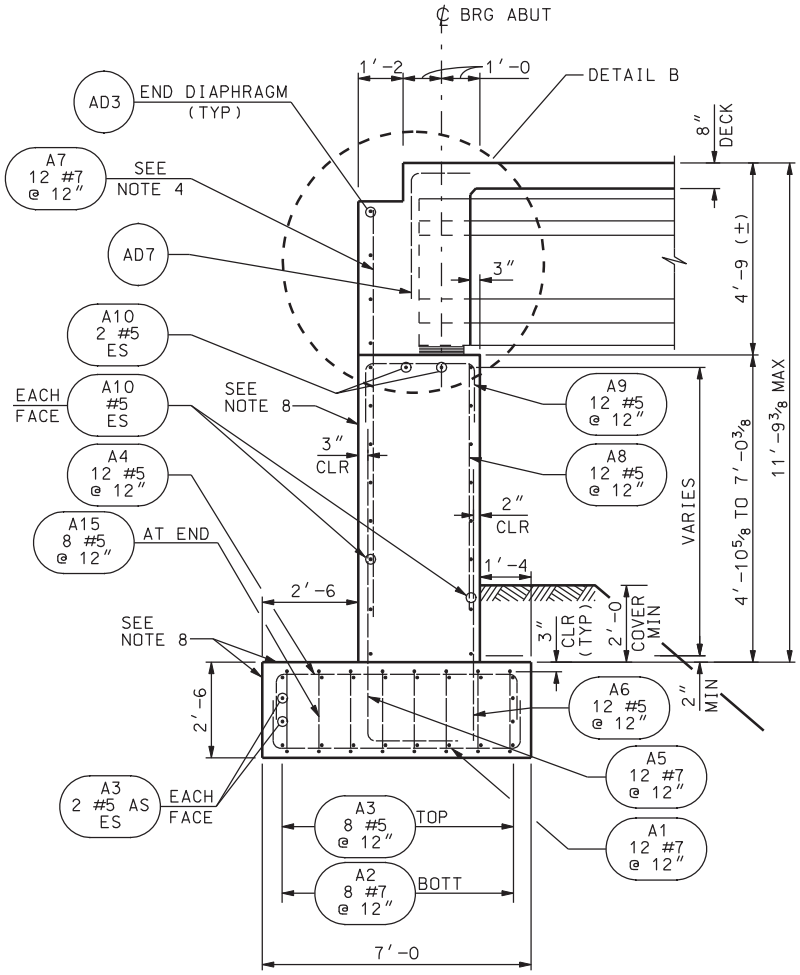


SECTION A-A

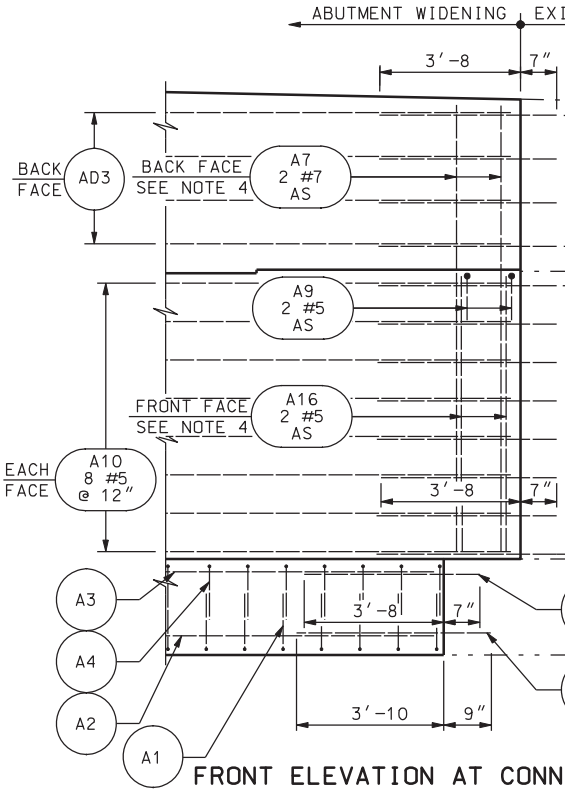


FRONT ELEVATION AT CONN

ALL BA
LOCATIONS

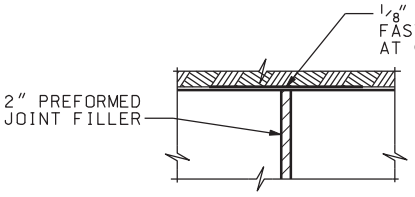


CONTRACTION JOINT DETAIL

USE RUBBER SHEET ON FACES OF JOINT IN CONTACT WITH SOIL (AT NB AND SB ABUTMENT INTERFACE SEE DETAIL A THIS SHEET)

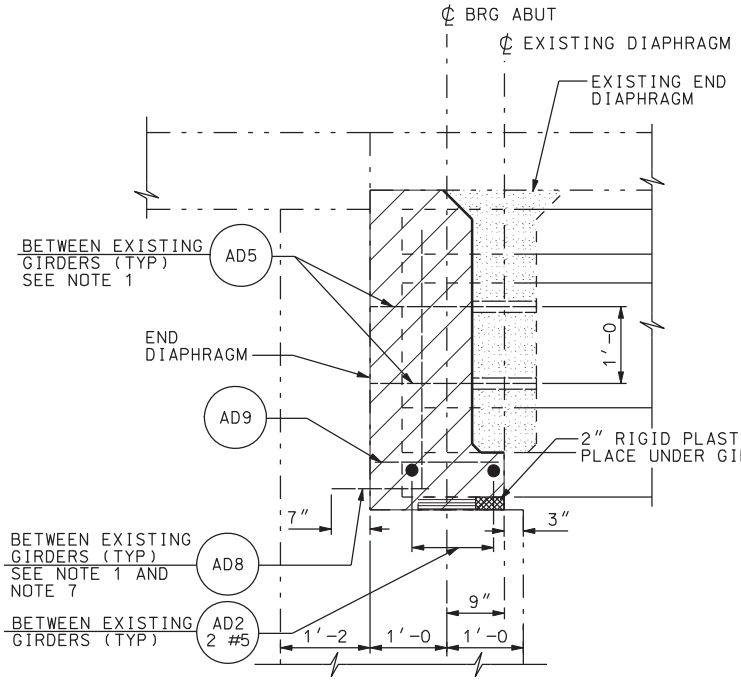


SECTION B-B

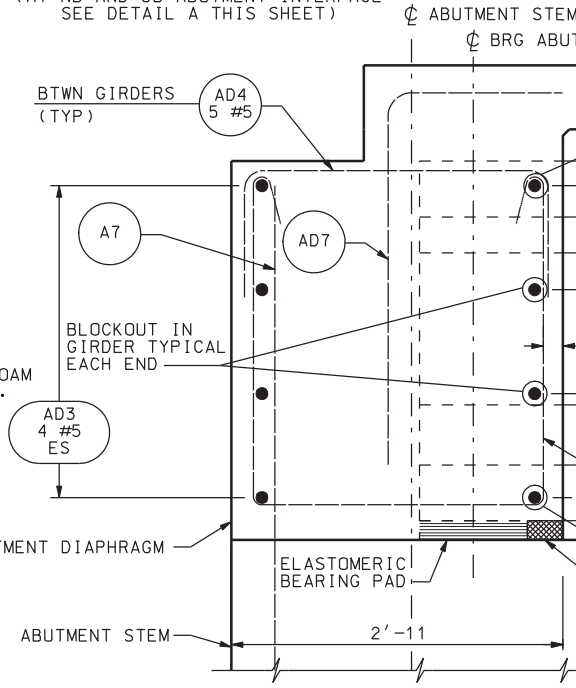


DETAIL B

DGN File: IP_PWPcdns1717\4433_F13_07.dgn

02-MAY-2005

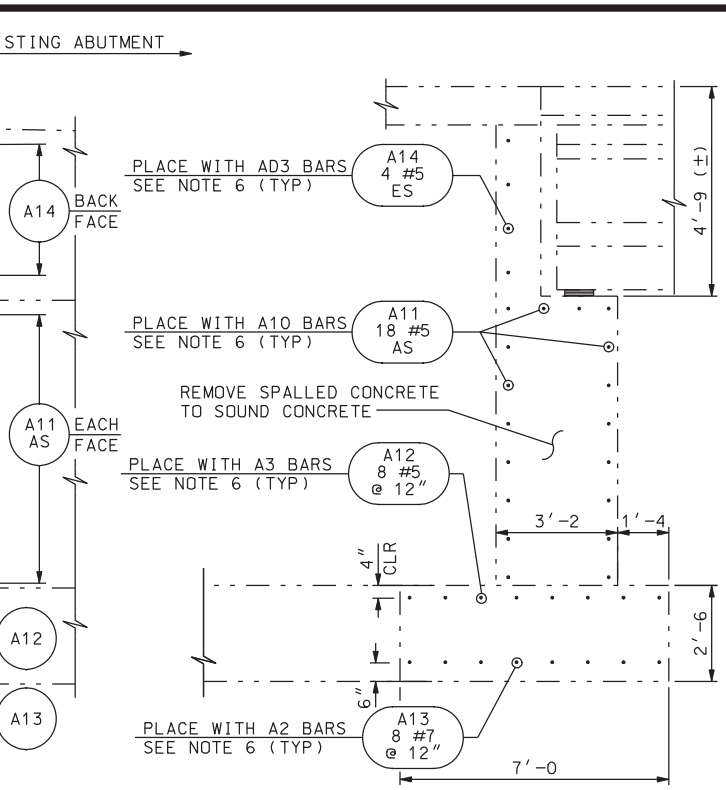


ECTION

EXISTING ABUTMENT SECTION AT CONNECTION

CONNECTION DETAIL

ARS NOT SHOWN FOR CLARITY. BAR AND CLEARANCES TO BE ADJUSTED FOR BAR LAP AS REQUIRED.

HEET
NAILS

## NOTES

1. APPROVED EPOXY ANCHORAGE FOR REINFORCING STEEL TO EXISTING ABUTMENT.
2. SEE "ABUTMENT #1 PLAN & ELEVATION" AND "ABUTMENT #4 PLAN & ELEVATION" FOR LOCATION OF SECTIONS AND DETAILS ON THIS SHEET.
3. SPACING OF REINFORCING STEEL MAY BE (±). USE THE NUMBER OF BARS SHOWN.
4. CUT REINFORCING BARS TO MAINTAIN 2" CLEAR BELOW APPROACH SLAB SEAT OR ABUTMENT SEAT AT ABUTMENT.
5. FOR REQUIRED BLOCKOUT IN GIRDER, SEE "GIRDER DETAILS - SPANS 1 & 3" SHEET.
6. PLACE TO MISS EXISTING REINFORCING.
7. PLACE AD8 BARS PRIOR TO AD5 BARS.
8. PLACE BUTYL RUBBER SHEET ON ABUTMENT CONCRETE SUFACES IN CONTACT WITH SOIL BETWEEN NORTHBOUND AND SOUTHBOUND STRUCTURES, SEE CONTRACTION JOINT DETAIL.

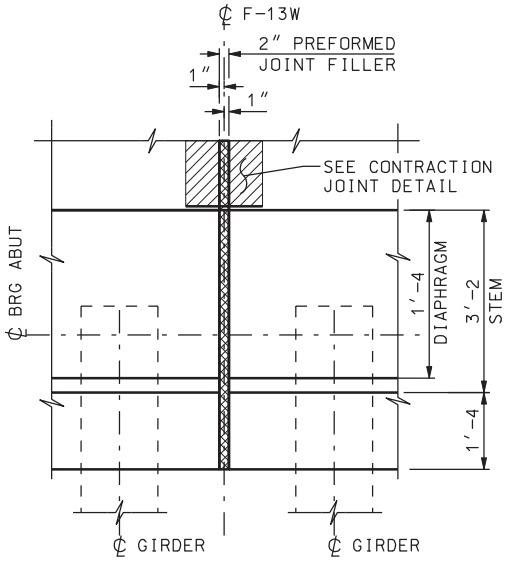


DETAIL A

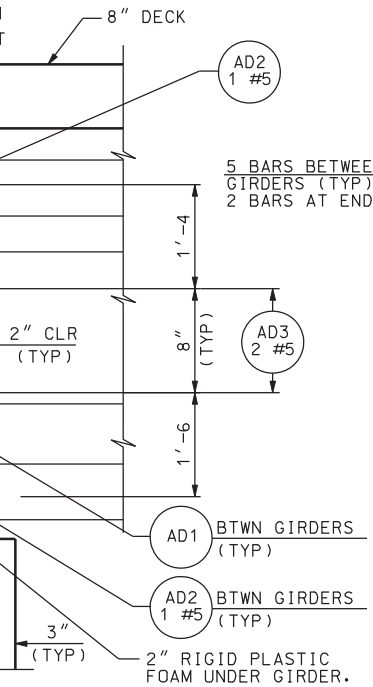


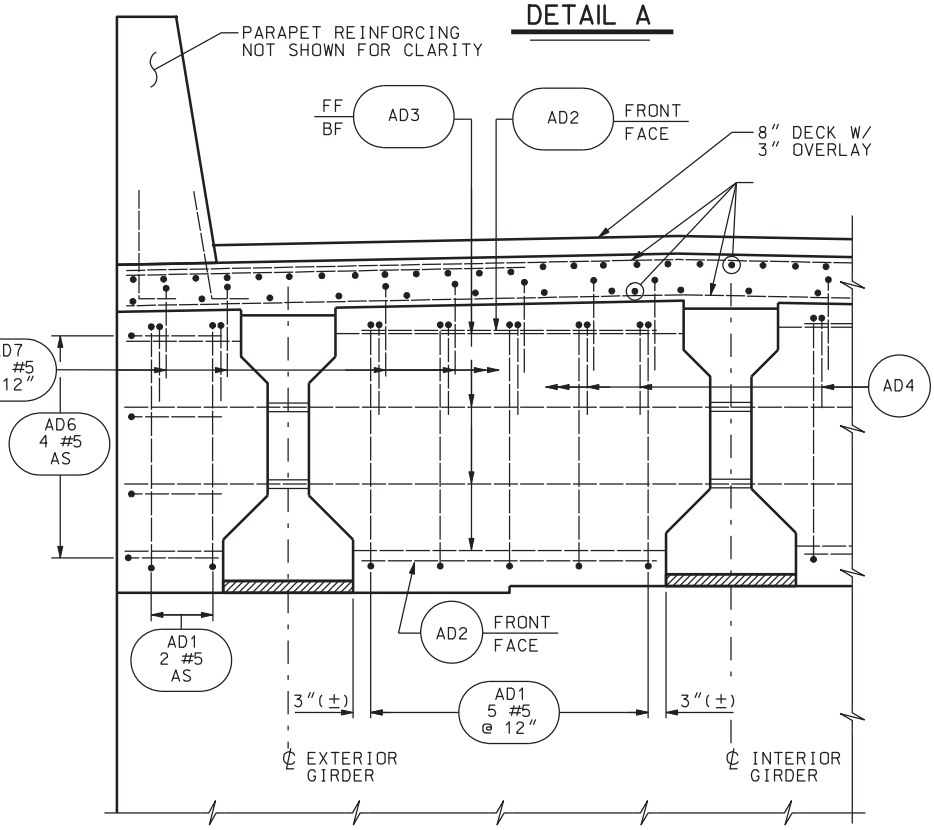


ABUTMENT DIAPHRAGM DETAIL

(TYPICAL REINFORCING BETWEEN GIRDERS AT NEW END DIAPHRAGMS)

| NO. | DATE | BY | REMARKS |
|---|---|---|---|
| | | | |

REVISIONS

UTAH DEPARTMENT OF TRANSPORTATION
SALT LAKE CITY, UTAH
STRUCTURES DIVISION

URS

DESIGN PH 12/04 CHECK GTD 12/04
DRAWN DKH 12/04 CHECK PH 12/04
QUANT. CDT 12/04 CHECK CEL 12/04

APPROVAL RECOMM. DATE SENIOR DESIGN ENGR.
APPROVED FOR USE BY UDOT DATE UDOT BRIDGE ENGR.

I-15; CORRIDOR IN UTAH COUNTY
800 NORTH OVERPASS IN OREM
ABUTMENT DETAILS

PROJECT NUMBER SP-15-6(52)241

UTAH
COUNTY

F-13W
DRG. NO.

SHT. 7 OF 26

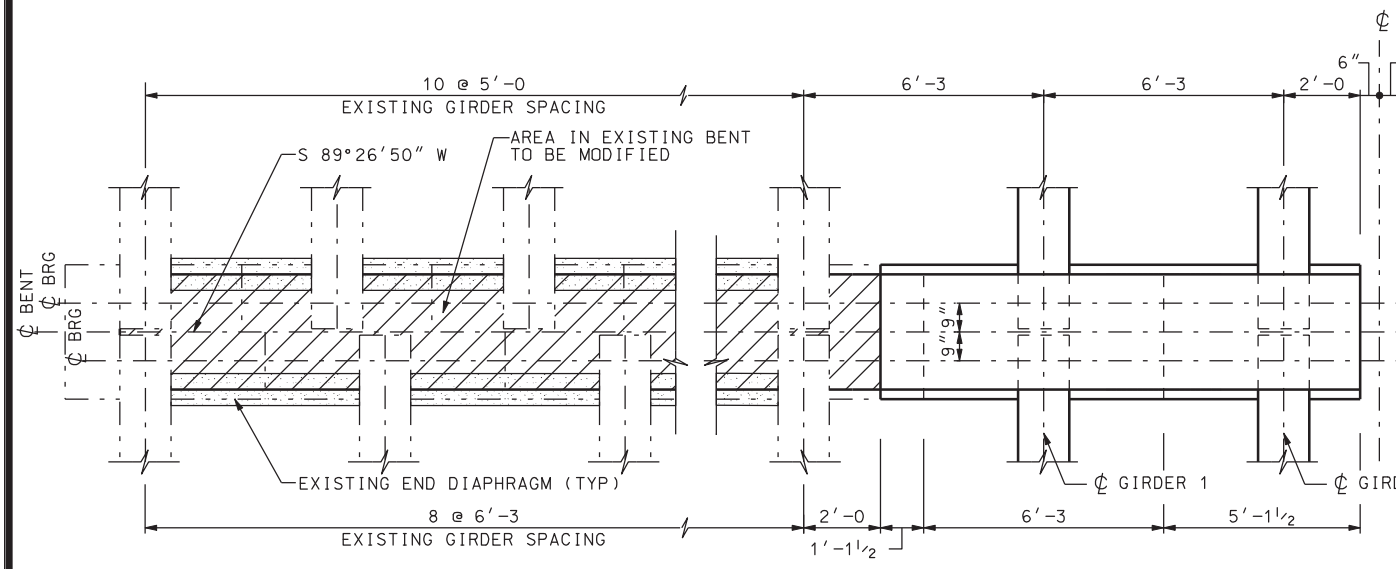


PLA

LOOKING UP
(DECK NOT

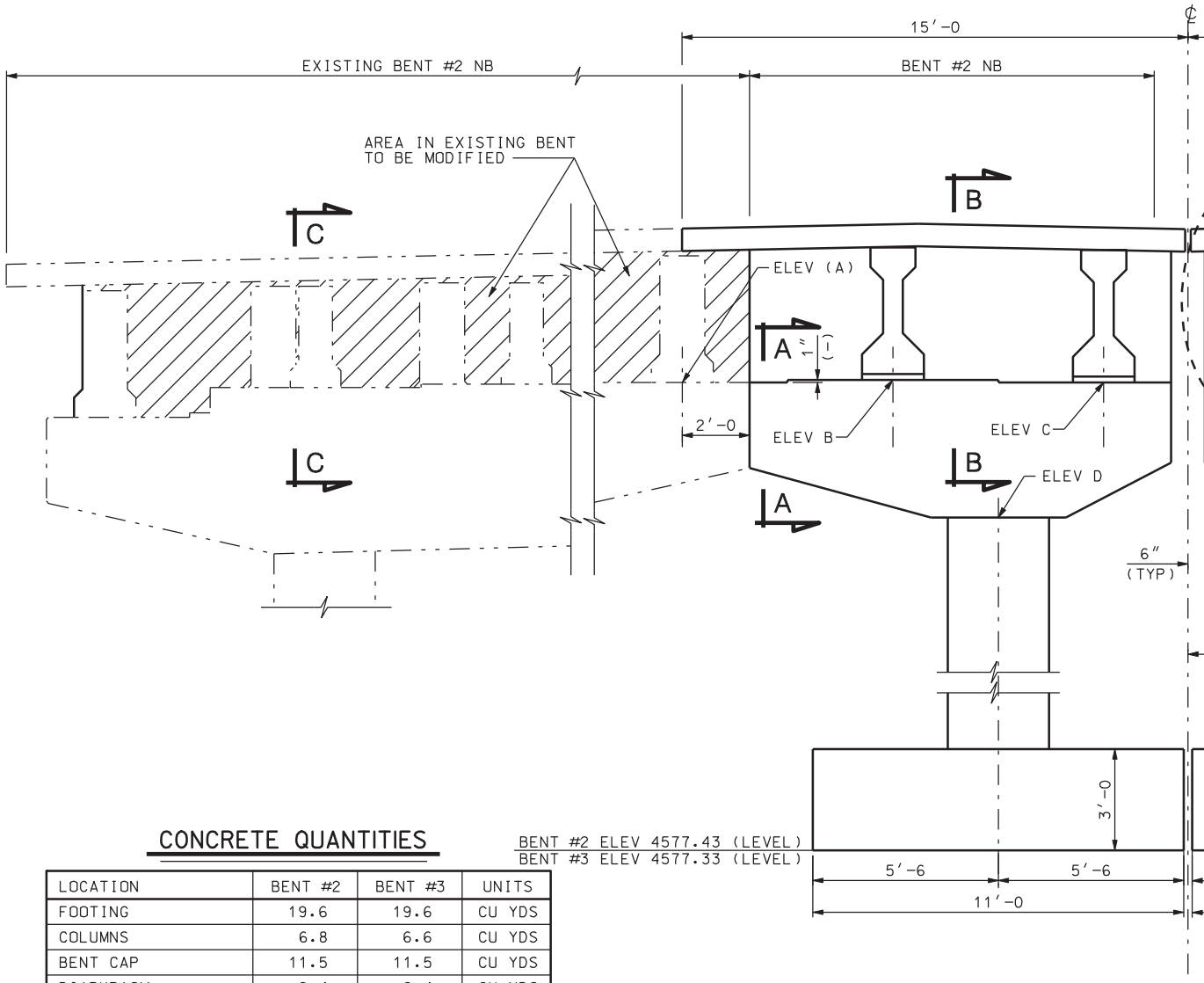


## CONCRETE QUANTITIES

| LOCATION | BENT #2 | BENT #3 | UNITS |
|---|---|---|---|
| FOOTING | 19.6 | 19.6 | CU YDS |
| COLUMNS | 6.8 | 6.6 | CU YDS |
| BENT CAP | 11.5 | 11.5 | CU YDS |
| DIAPHRAGM | 9.4 | 9.4 | CU YDS |
| MODIFIED DIAPHRAGM | 25.0 | 25.0 | CU YDS |
| TOTAL | 72.3 | 72.1 | CU YDS |

ELEVAT

LOOKING UP
BENT #2 SHOWN; BE
(PARAPET NO

DGN File:IP_PWPcdns1717\4433_F13_08.dgn

02-MAY-2005

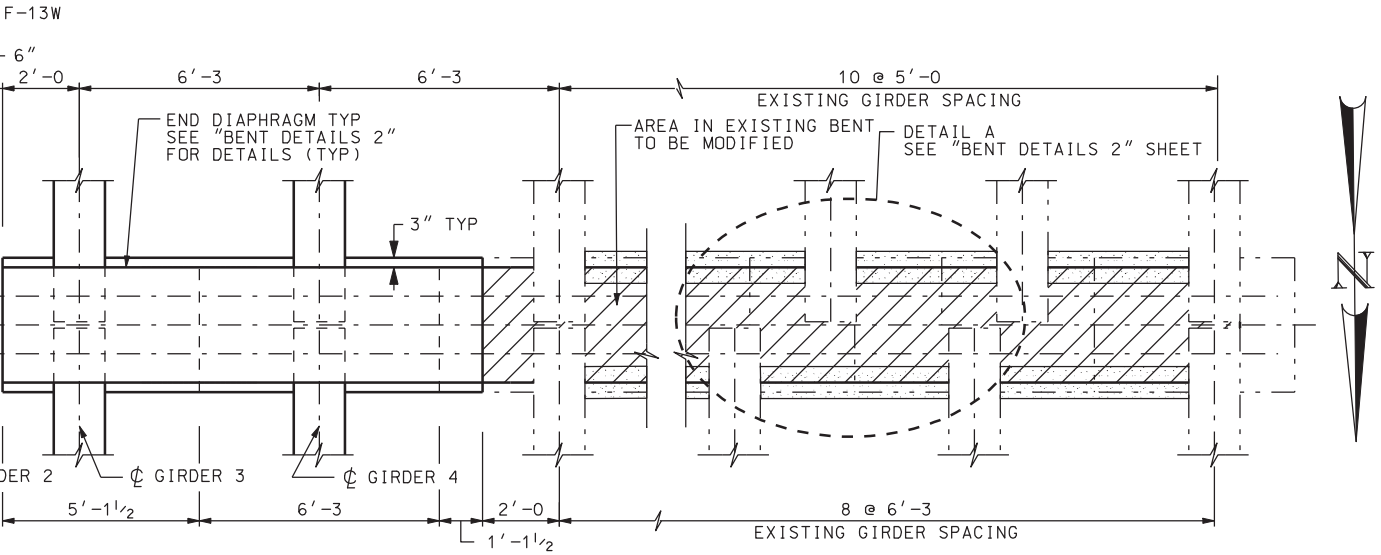


N

STATION
SHOWN)

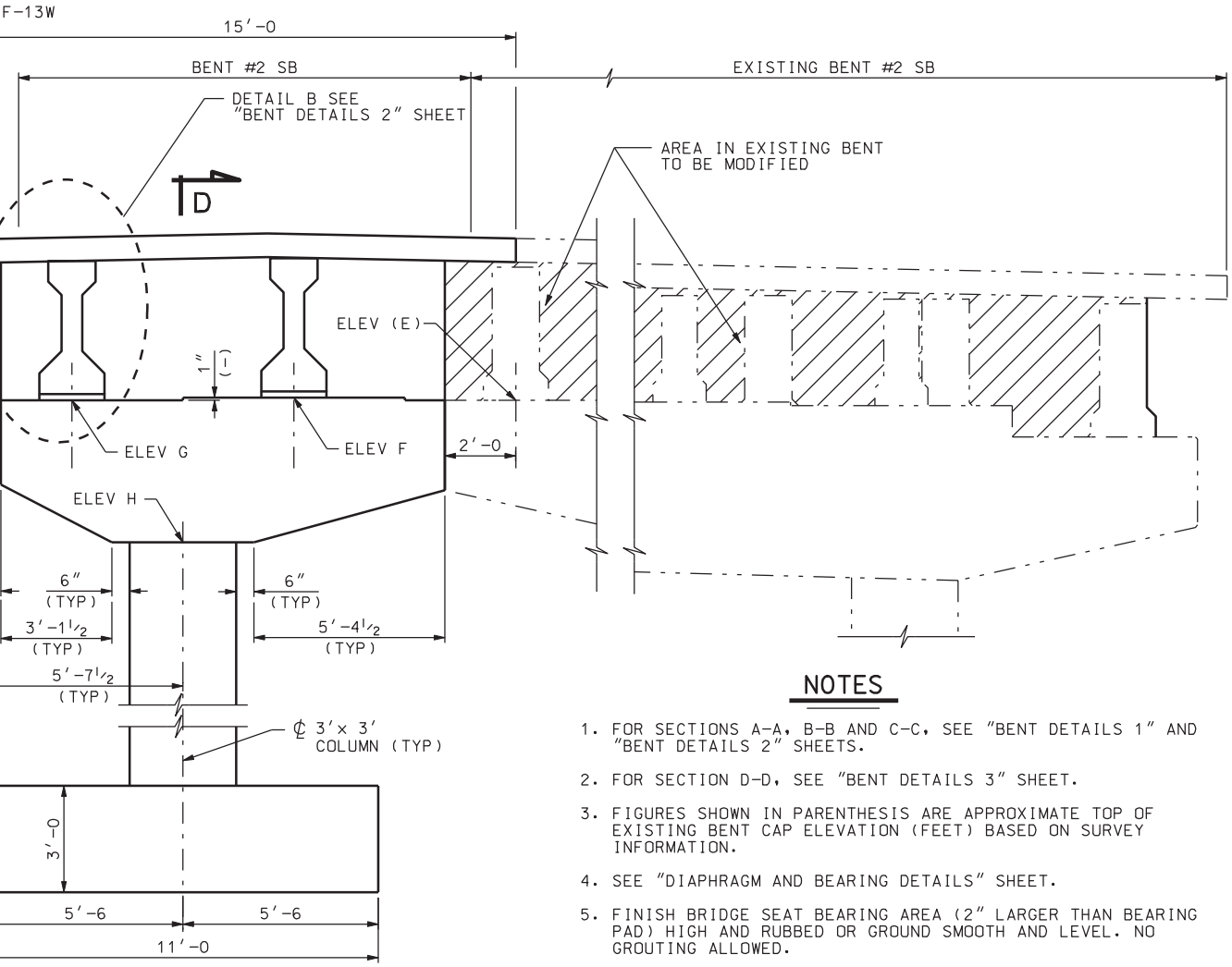


## NOTES

1. FOR SECTIONS A-A, B-B AND C-C, SEE "BENT DETAILS 1" AND "BENT DETAILS 2" SHEETS.
2. FOR SECTION D-D, SEE "BENT DETAILS 3" SHEET.
3. FIGURES SHOWN IN PARENTHESIS ARE APPROXIMATE TOP OF EXISTING BENT CAP ELEVATION (FEET) BASED ON SURVEY INFORMATION.
4. SEE "DIAPHRAGM AND BEARING DETAILS" SHEET.
5. FINISH BRIDGE SEAT BEARING AREA (2" LARGER THAN BEARING PAD) HIGH AND RUBBED OR GROUND SMOOTH AND LEVEL. NO GROUTING ALLOWED.
6. ALIGN ℄ OF NEW BENT WITH ℄ OF EXISTING BENT. ALIGN COLUMNS AND ENSURE NEW BENT CAP FACE MATCHES EXISTING BENT CAP FACE.

D

TION

STATION
ENT #3 SIMILAR
T SHOWN)

BENT CAP ELEVATIONS

| LOCATION | ELEVATIONS | | | | | | | |
|---|---|---|---|---|---|---|---|---|
| | A | B | C | D | E | F | G | H |
| BENT #2 | 4601.94 | 4602.02 | 4601.94 | 4597.94 | 4601.94 | 4602.02 | 4601.94 | 4597.94 |
| BENT #3 | 4601.62 | 4601.69 | 4601.61 | 4597.61 | 4601.62 | 4601.69 | 4601.61 | 4597.61 |

| NO. | DATE | BY | REMARKS |
|---|---|---|---|
| | | | |

REVISIONS

UTAH DEPARTMENT OF TRANSPORTATION
SALT LAKE CITY, UTAH
STRUCTURES DIVISION

URS

DESIGN PH 12/04 CHECK GTD 12/04
DRAWN DKH 12/04 CHECK PH 12/04
QUANT. CDT 12/04 CHECK CEL 12/04

APPROVAL RECOMM. DATE SENIOR DESIGN ENGR.
APPROVED FOR USE BY UDOT DATE UDOT BRIDGE ENGR.

I-15; CORRIDOR IN UTAH COUNTY
800 NORTH OVERPASS IN OREM
BENT PLAN & ELEVATION

PROJECT NUMBER SP-15-6(52)241

UTAH
COUNTY

F-13W
DRG. NO.

SHT. 8 OF 26

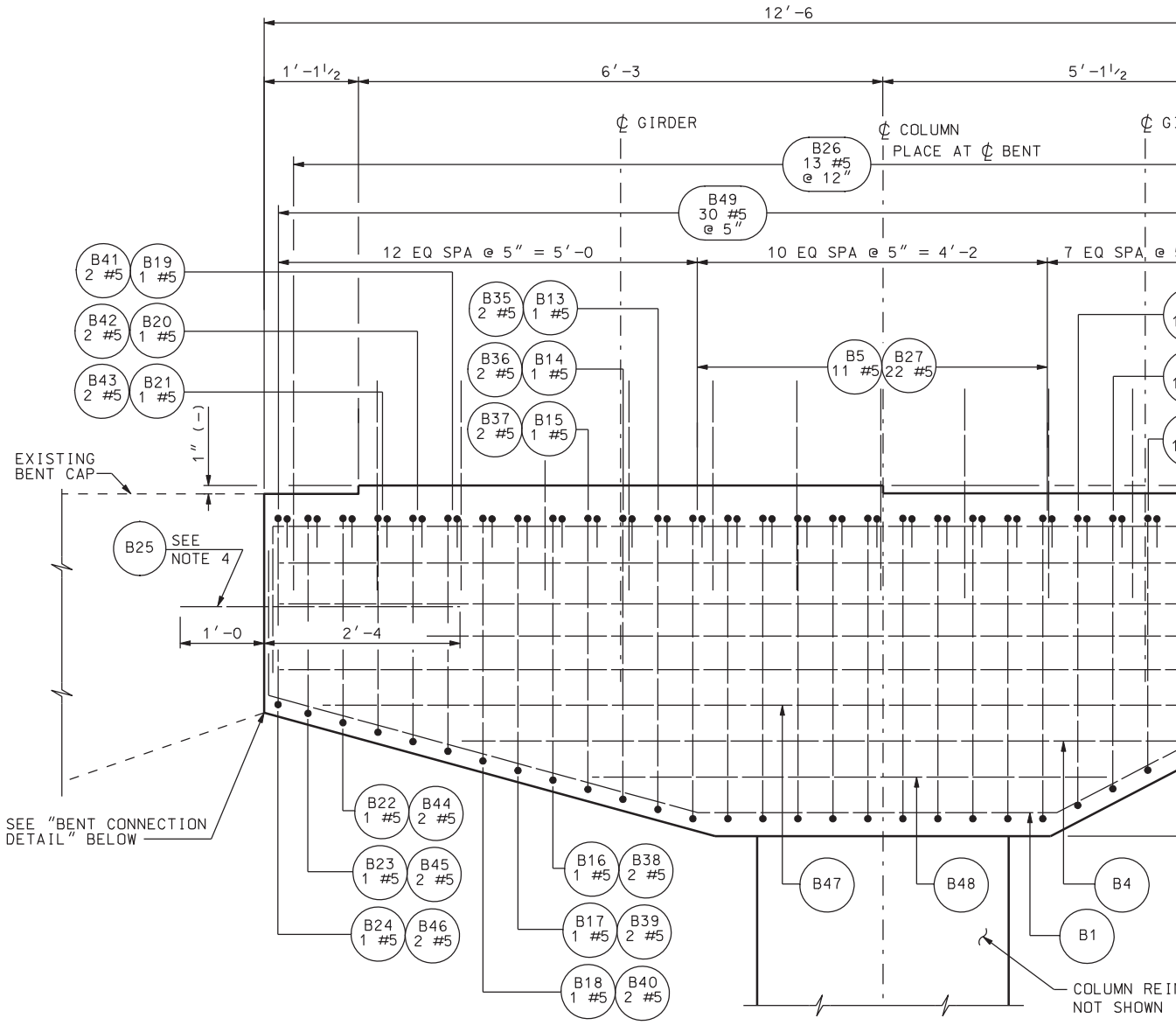


## BENT CAP DETAIL

(NB SHOWN, SB SIMILAR)

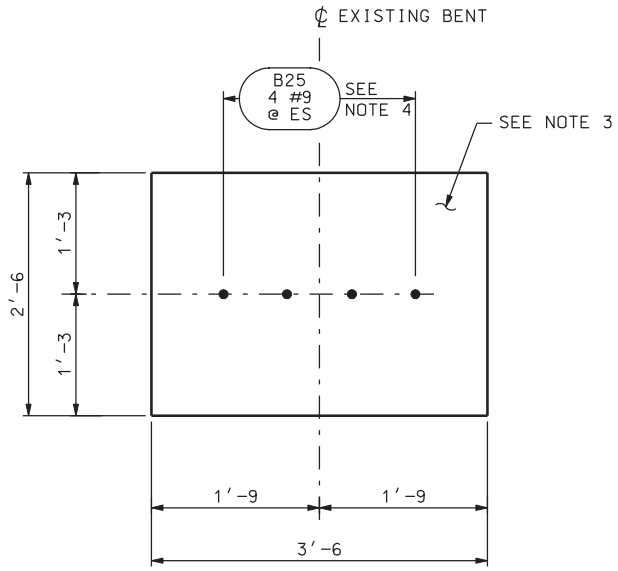


## BENT CONNECTION DETAIL

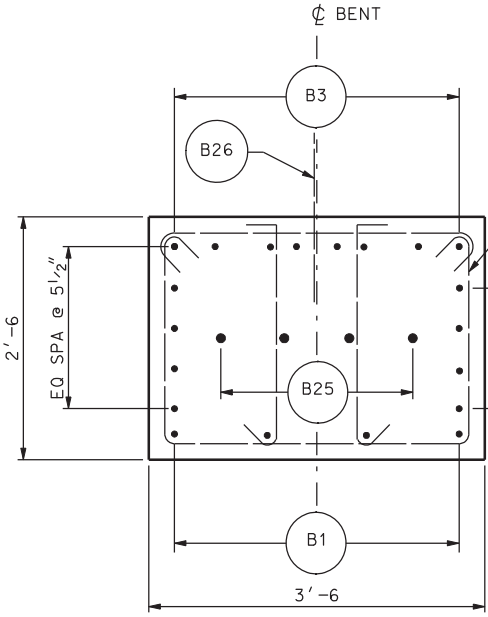


## SECTION A-A

DGN File:IP_PWPcdms1717\4433_F13_09.dgn
02-MAY-2005

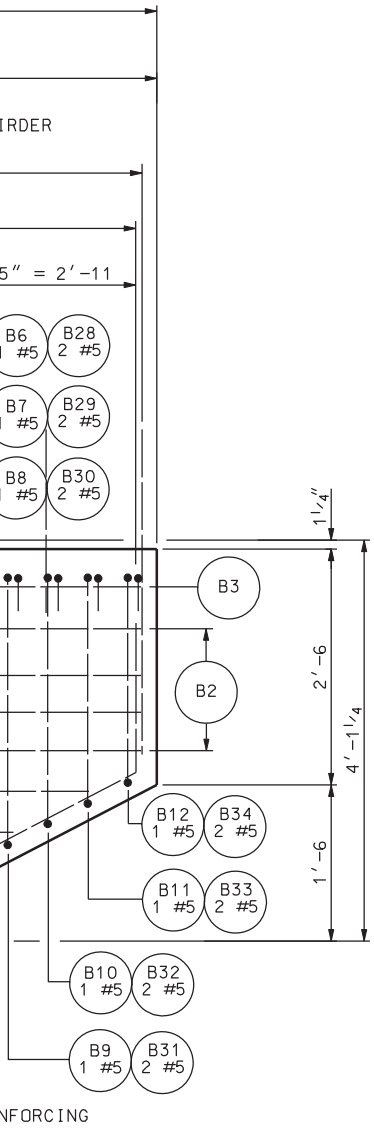


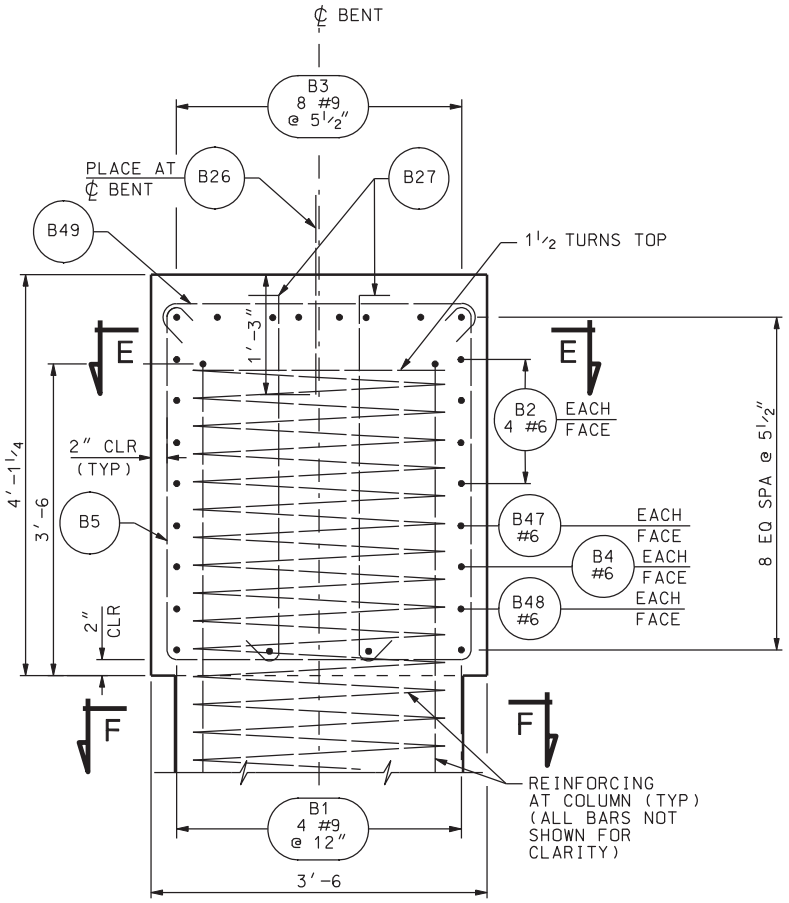


## BENT CAP DETAIL @ ℄ COLUMN

(NB SHOWN, SB SIMILAR)

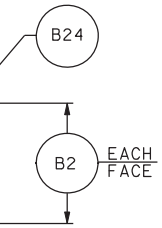


## NOTES

1. PROVIDE 2″ MIN COVER TO REINFORCING STEEL UNLESS NOTED OTHERWISE.
2. SEE "BENT DETAILS 2" SHEET FOR SECTIONS E-E & F-F AND "BENT PLAN AND ELEVATION" SHEET FOR LOCATION OF SECTION A-A.
3. FACE OF EXISTING TO BE ROUGHENED BEFORE DOWELS ARE PLACED AND FORMS ARE SET FOR NEW CONSTRUCTION. REMOVE SPALLED CONCRETE TO SOUND CONCRETE.
4. APPROVED EPOXY ANCHORAGE FOR REINFORCING STEEL TO EXISTING BENT CAP. PLACE TO MISS EXISTING REINFORCING STEEL.
5. SPACING OF REINFORCING STEEL MAY BE (±). USE THE NUMBER OF BARS SHOWN.
6. ALIGN NEW BENT CAP FACE WITH EXISTING BENT CAP FACE.

| NO. | DATE | BY | REMARKS |
|---|---|---|---|
| | | | |

REVISIONS

UTAH DEPARTMENT OF TRANSPORTATION
SALT LAKE CITY, UTAH
STRUCTURES DIVISION

URS

DESIGN PH 12/04 CHECK GTD 12/04
DRAWN DKH 12/04 CHECK PH 12/04
QUANT. CDT 12/04 CHECK CEL 12/04

APPROVAL RECOMM. DATE SENIOR DESIGN ENGR.
APPROVED FOR USE BY UDOT DATE UDOT BRIDGE ENGR.

I-15; CORRIDOR IN UTAH COUNTY
800 NORTH OVERPASS IN OREM
BENT DETAILS 1
PROJECT NUMBER SP-15-6(52)241

UTAH
COUNTY

F-13W
DRG. NO.

SHT. 9 OF 26

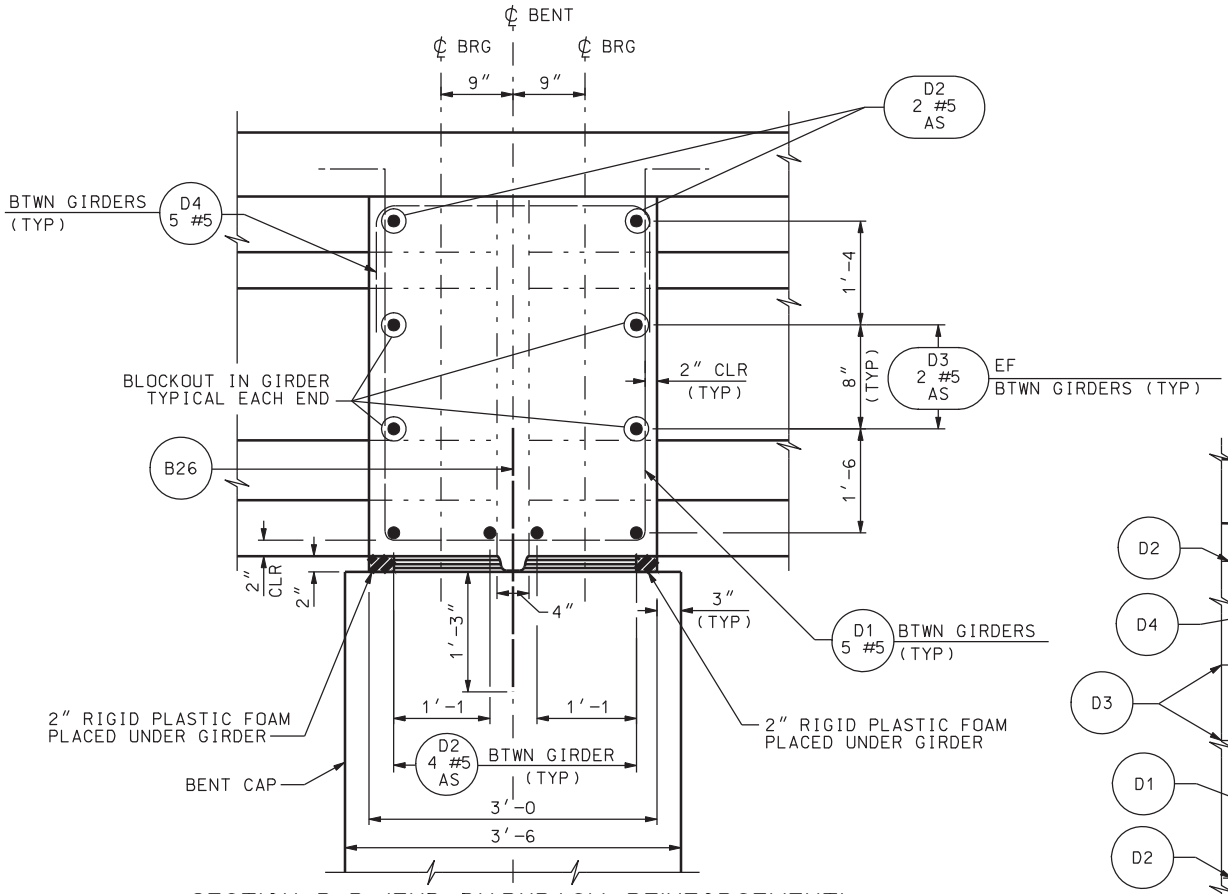


## SECTION B-B (END DIAPHRAGM REINFORCEMENT)

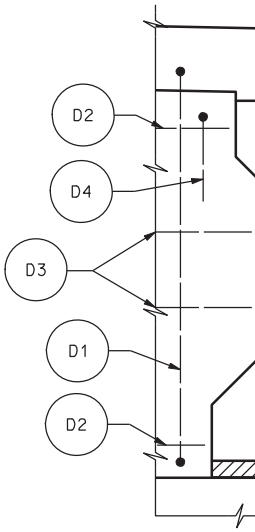


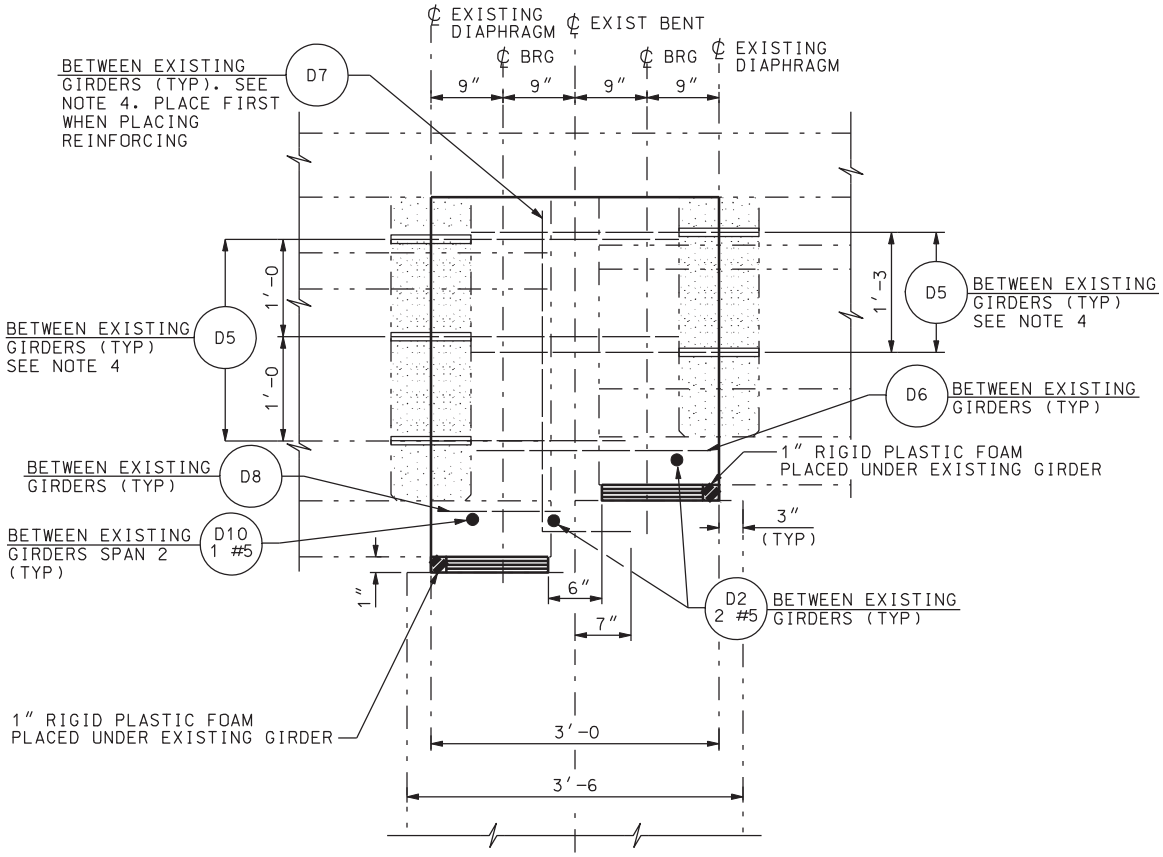


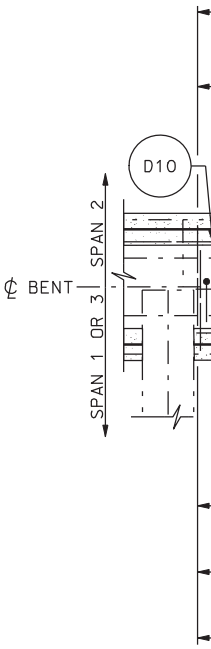


## SECTION C-C (END DIAPHRAGM REINFORCEMENT)

SECTION SHOWN FOR BENT #2; BENT #3 OPPOSITE

DGN File:IP_PWPcdns1717\4433_F13.10.dgn
02-MAY-2005

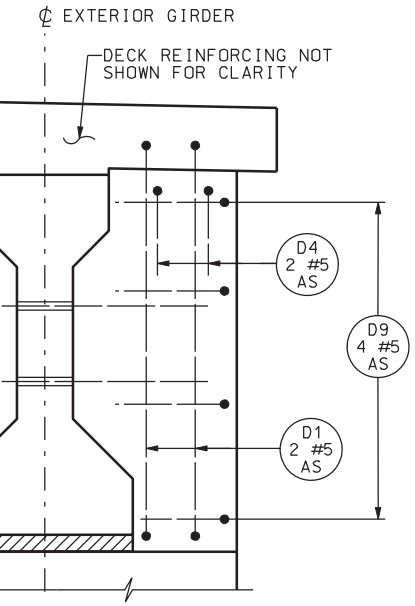


DETAIL B

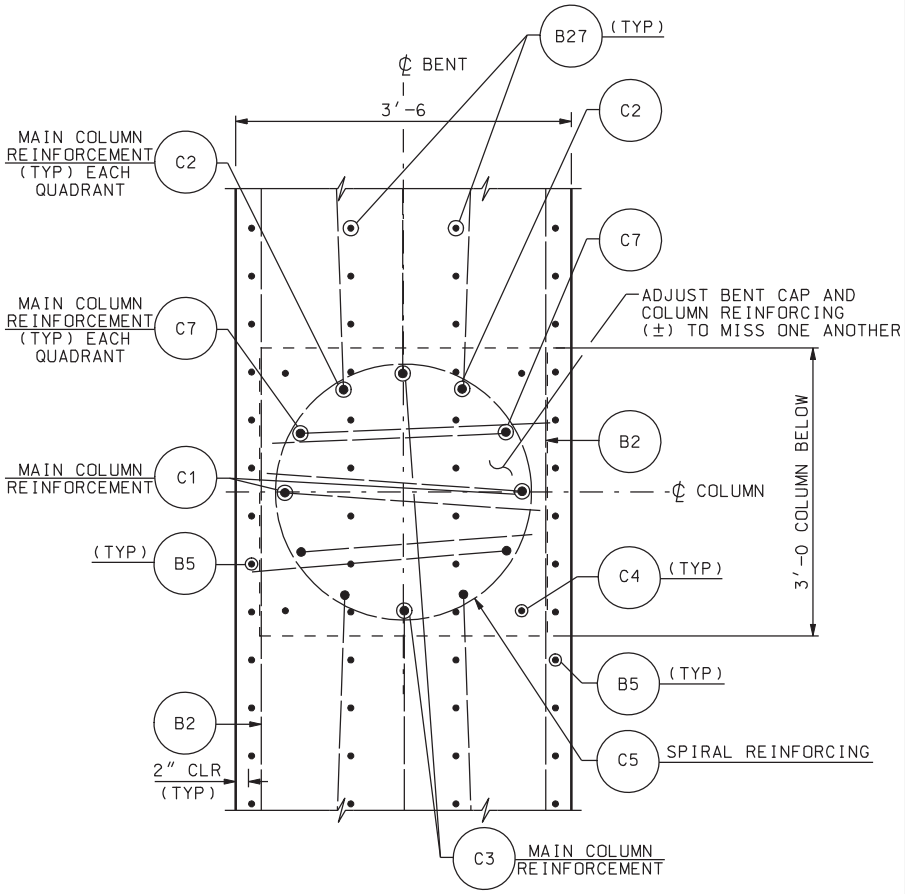


SECTION E-E

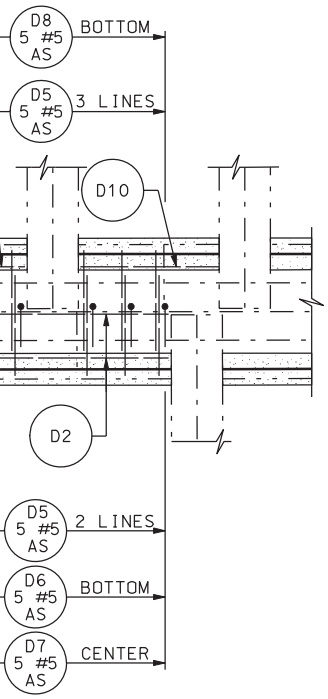


DETAIL A

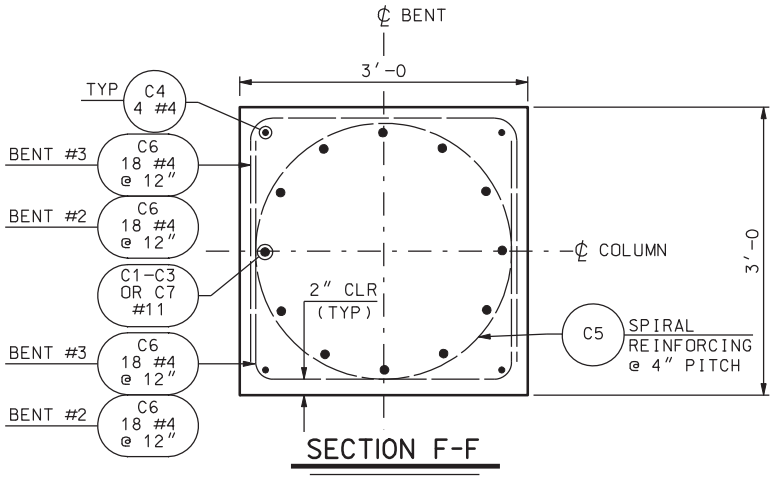


SECTION F-F

## NOTES

1. PROVIDE 2" MIN COVER TO REINFORCING STEEL UNLESS NOTED OTHERWISE.
2. SEE "BENT PLAN AND ELEVATION" FOR LOCATIONS OF SECTIONS B-B & C-C & DETAIL A AND DETAIL B AND SEE "BENT DETAILS 1" FOR SECTIONS E-E AND F-F.
3. FOR REQUIRED BLOCKOUT IN GIRDER SEE "GIRDER DETAILS - SPANS 1 & 3" AND "GIRDER DETAILS - SPAN 2" SHEETS.
4. APPROVED EPOXY ANCHORAGE FOR REINFORCING STEEL TO EXISTING CONCRETE.
5. SPACING OF REINFORCING STEEL MAY BE (±). USE THE NUMBER OF BARS SHOWN.

| NO. | DATE | BY | REMARKS |
|---|---|---|---|

REVISIONS

UTAH DEPARTMENT OF TRANSPORTATION
SALT LAKE CITY, UTAH
STRUCTURES DIVISION

URS

DESIGN PH 12/04 CHECK GTD 12/04
DRAWN DKH 12/04 CHECK PH 12/04
QUANT. CDT 12/04 CHECK CEL 12/04

APPROVAL RECOMM. DATE SENIOR DESIGN ENGR.
APPROVED FOR USE BY UDOT DATE UDOT BRIDGE ENGR.

I-15; CORRIDOR IN UTAH COUNTY
800 NORTH OVERPASS IN OREM
BENT DETAILS 2

PROJECT NUMBER SP-15-6(52)241

UTAH
COUNTY

F-13W
DRG. NO.

SHT. 10 OF 26

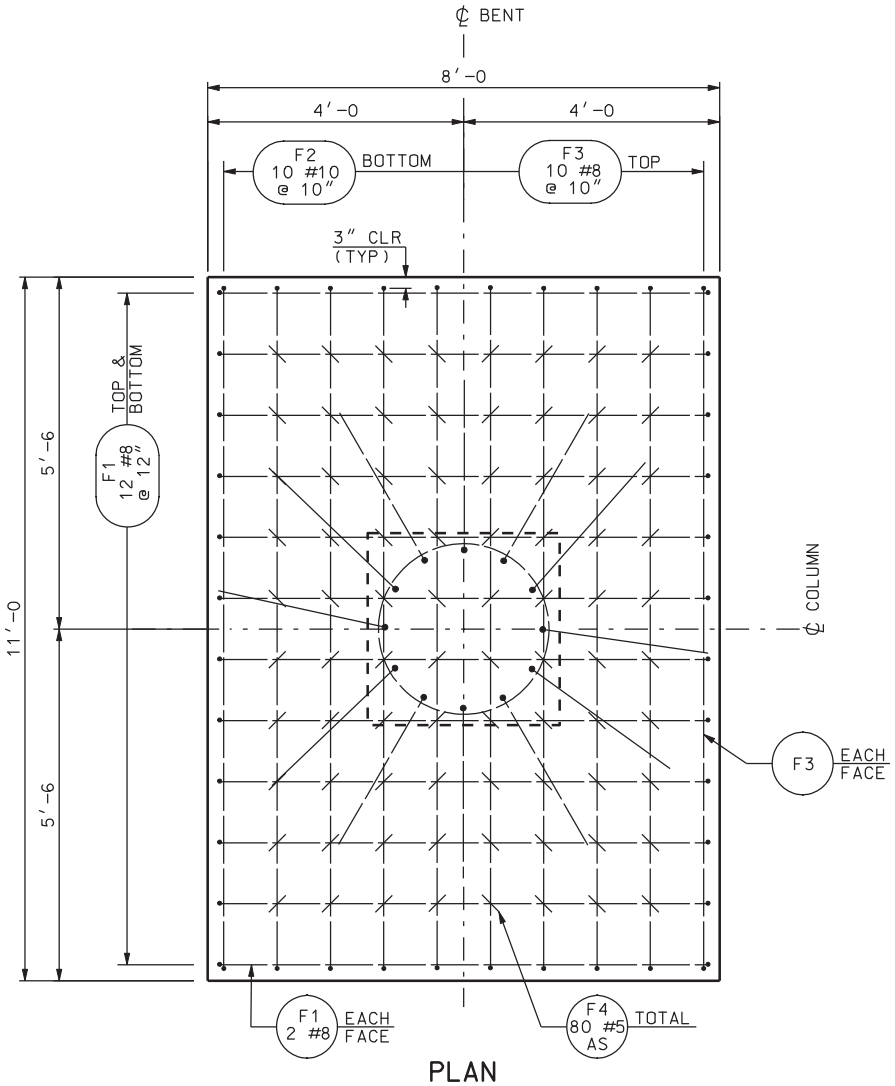


PLAN

NO

1. SEE "BENT PLAN & E

2. SPACING OF REINFOR
USE THE NUMBER OF

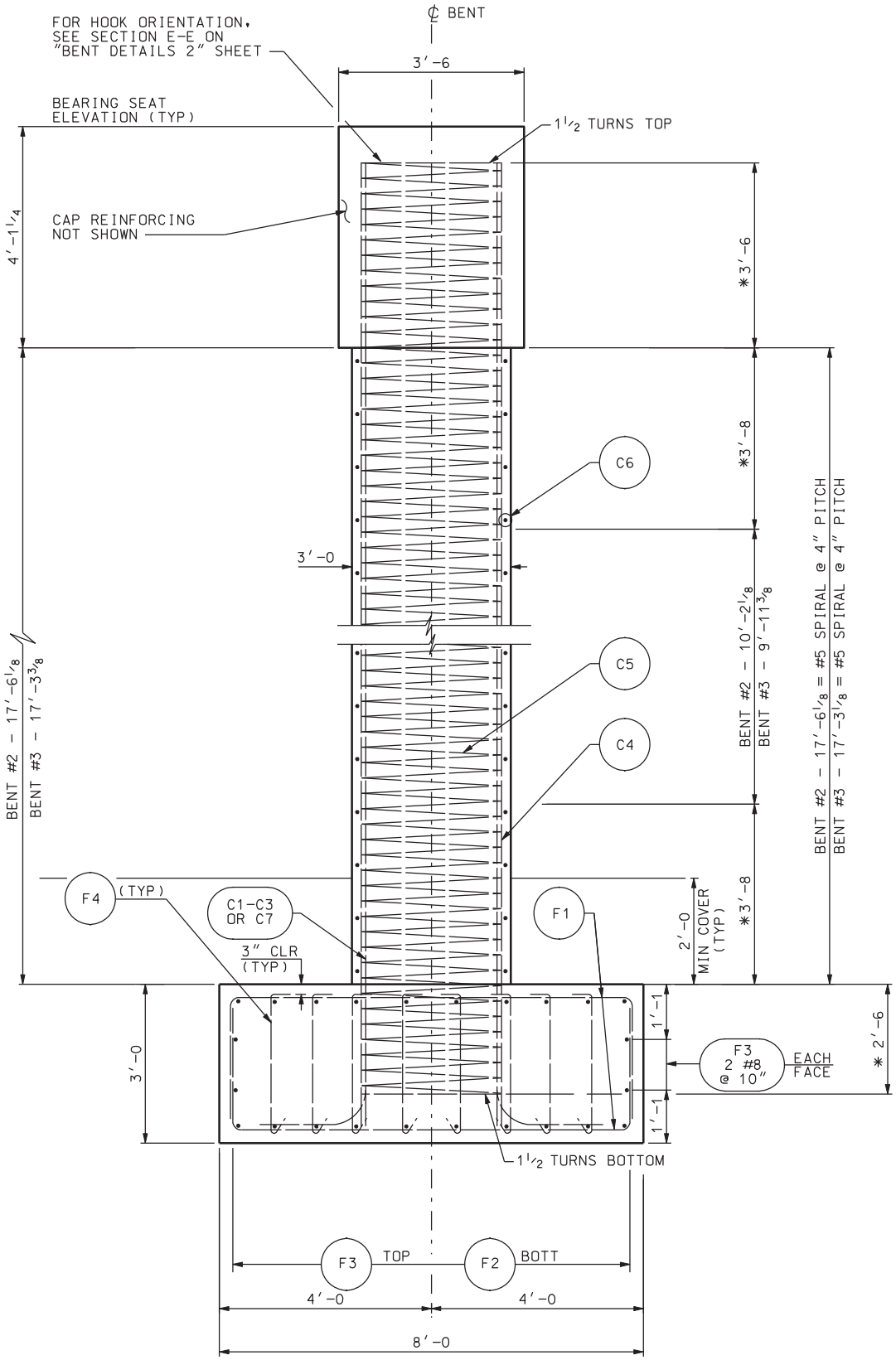


## SECTION D-D

AT COLUMNS

* LAP SPLICE OR SPIRAL SPLICE NOT ALLOWED

## TES

LEVATION" FOR SECTION D-D.

CING STEEL MAY BE (±).
BARS SHOWN.

| NO. | DATE | BY | REMARKS |
|---|---|---|---|
| | | | |

REVISIONS

UTAH DEPARTMENT OF TRANSPORTATION
SALT LAKE CITY, UTAH
STRUCTURES DIVISION

URS

DESIGN PH 12/04 CHECK GTD 12/04
DRAWN DKH 12/04 CHECK PH 12/04
QUANT. CDT 12/04 CHECK CEL 12/04

APPROVAL RECOMM. DATE SENIOR DESIGN ENGR.
APPROVED FOR USE BY UDOT DATE UDOT BRIDGE ENGR.

I-15; CORRIDOR IN UTAH COUNTY
800 NORTH OVERPASS IN OREM
BENT DETAILS 3

PROJECT NUMBER SP-15-6(52)241

UTAH
COUNTY

F-13W
DRG. NO.

SHT. 11 OF 26

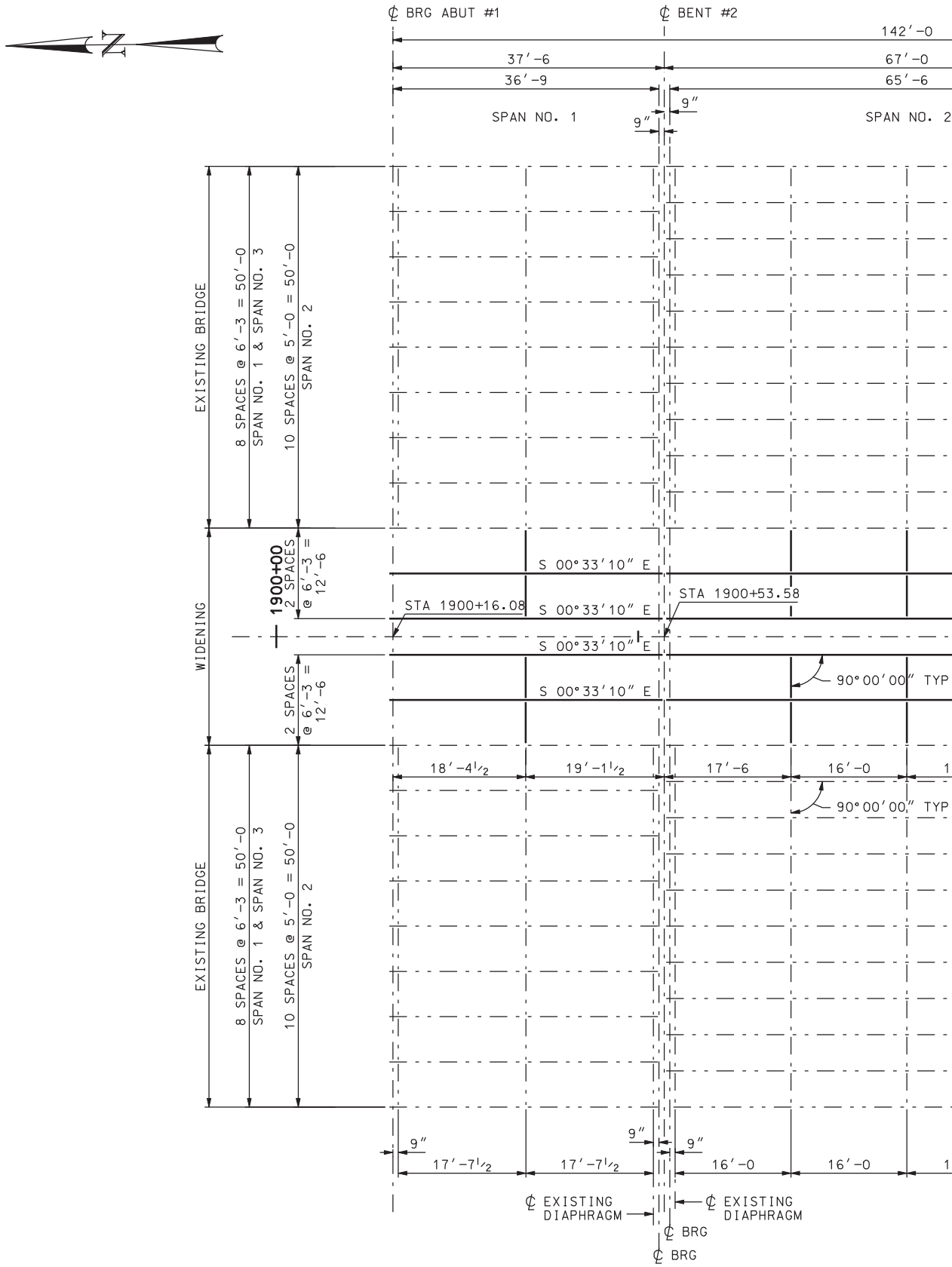


FRAMING PL

DGN File: IP_PWPcdnsl717\4433_F13_12.dgn

02-MAY-2005

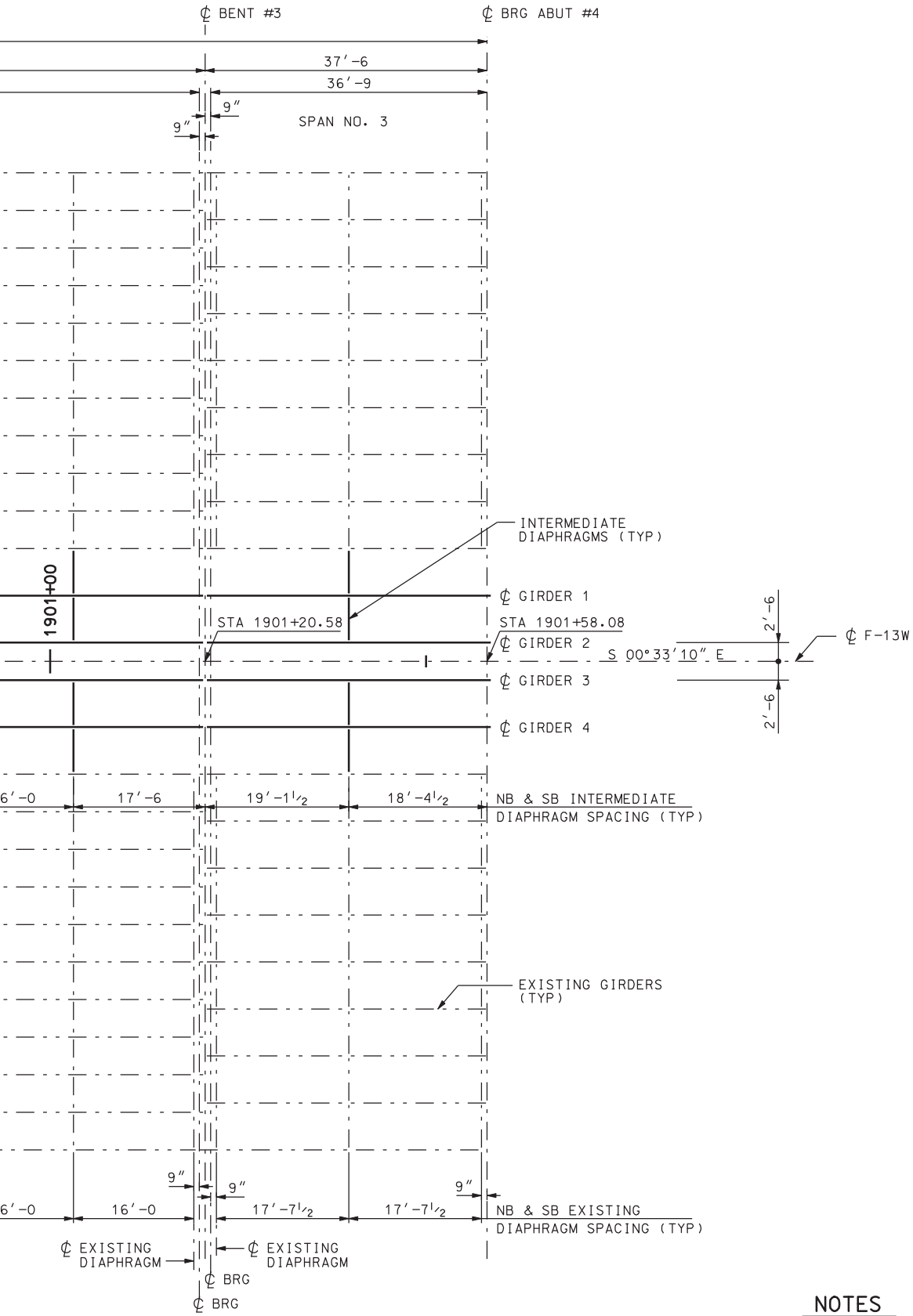


LAN

## NOTES

1. SEE "GIRDER DETAILS – SPAN 1 & 3" AND "GIRDER DETAILS – SPAN 2" SHEETS FOR GIRDER DETAILS.
2. ALL ABUTMENTS AND BENTS ARE ON A BEARING S 89°26′50 W.
3. FOR INTERMEDIATE DIAPHRAGM DETAILS SEE "DIAPHRAGM AND BEARING DETAILS" SHEET.

| NO. | DATE | BY | REMARKS |
|---|---|---|---|

REVISIONS

UTAH DEPARTMENT OF TRANSPORTATION
SALT LAKE CITY, UTAH
STRUCTURES DIVISION

URS

DESIGN PH 12/04 CHECK GTD 12/04
DRAWN DKH 12/04 CHECK PH 12/04
QUANT. CDT 12/04 CHECK CEL 12/04

APPROVAL RECOMM. DATE SENIOR DESIGN ENGR.
APPROVED FOR USE BY UDOT DATE UDOT BRIDGE ENGR.

I-15; CORRIDOR IN UTAH COUNTY
800 NORTH OVERPASS IN OREM
FRAMING PLAN
PROJECT NUMBER SP-15-6(52)241

UTAH
COUNTY

F-13W
DRG. NO.

SHT. 12 OF 26

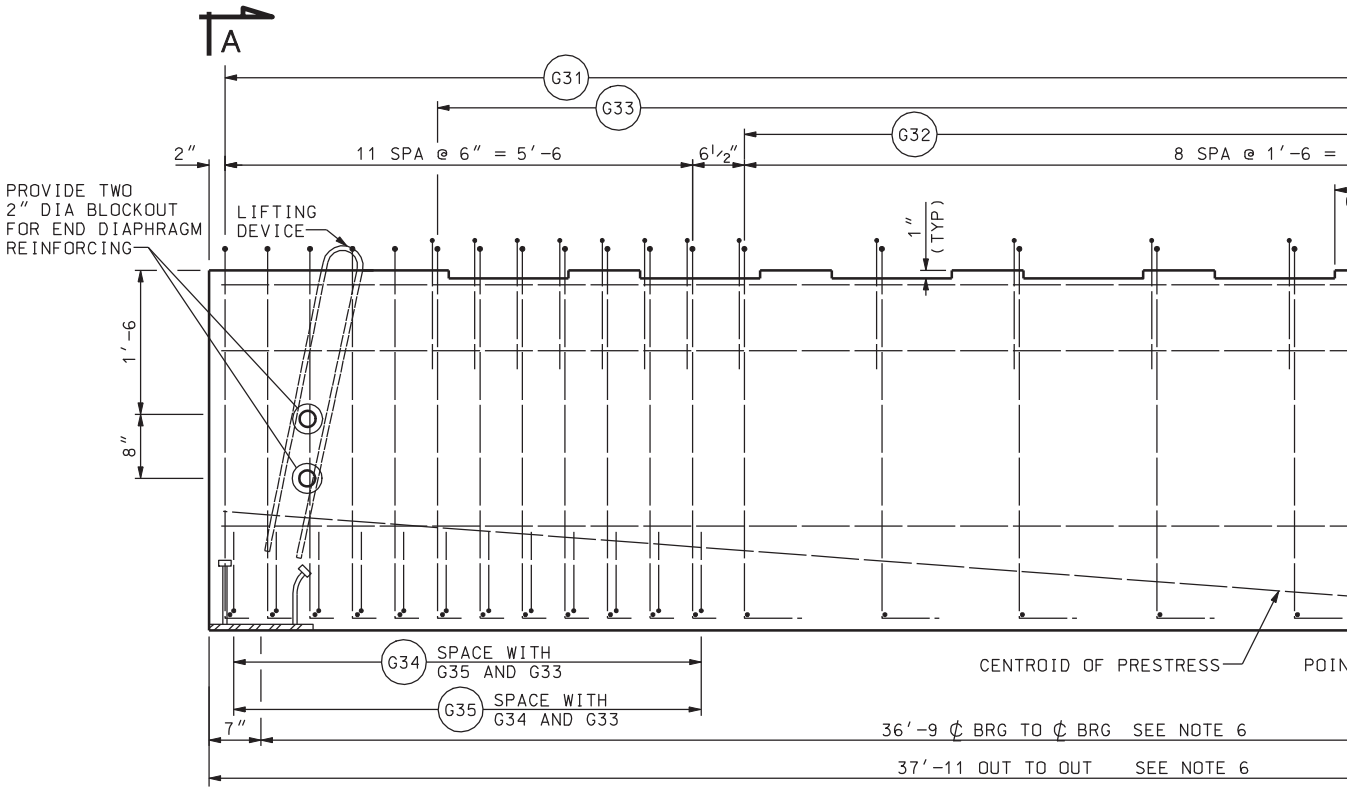


PARTIAL ELEVATION

(SPANS 1 & 3; GIRDERS 1 – 4)

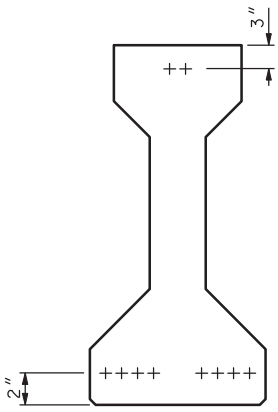


STRAND PATTERN

(STRAND PATTERN AT ENDS)
NO. OF STRAIGHT STRANDS = 8
NO. OF DRAPED STRANDS = 2

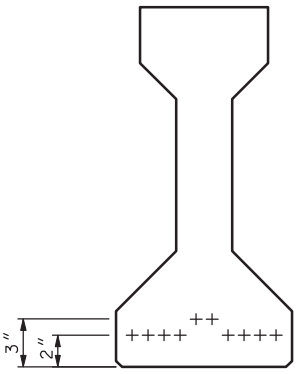


STRAND PATTERN

(STRAND PATTERN AT CENTER)

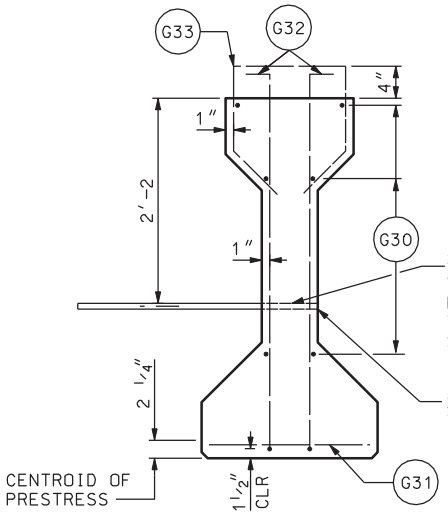


SECTION B-B

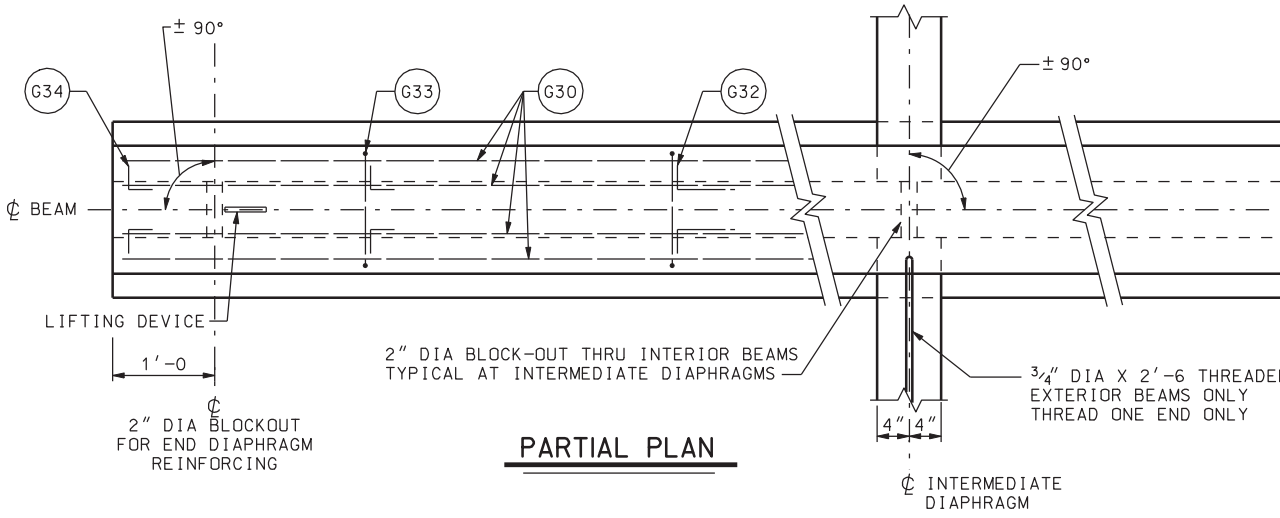


PARTIAL PLAN

DGN File: IP_PWPcdnsl717\4433_F13_13.dgn

02-MAY-2005

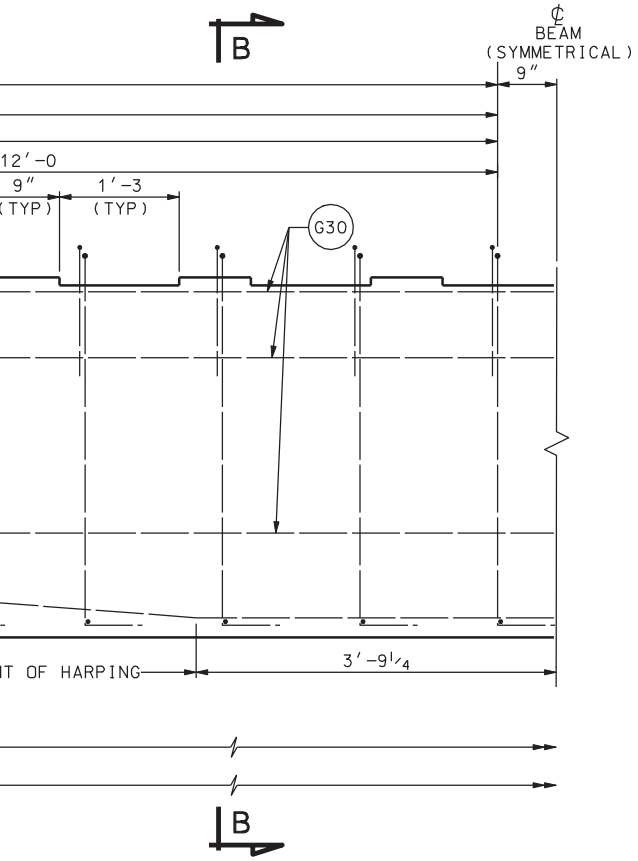


## REINFORCING STEEL SCHEDULE

| MARK | SIZE NO. | LENGTH | NO. REQ'D PER GIRDER | SKETCH |
|---|---|---|---|---|
| * G30 | 5 | 37′-7 | 6 | |
| G31 | 4 | 1′-6 | 42 | |
| G32 | 5 | 5′-1 | 36 | 3″, X, Y, 10″, Z, 4′-0 |
| G33 | 4 | 4′-4 | 32 | 10″, 9″, 1′-2, 1, 1 |
| G34 | 5 | 4′-6 | 48 | 3″, X, Y, 3″, Z, 4′-0 |
| G35 | 4 | 4′-8 | 24 | 5″, 7″, 7″, 1′-8, 1, 1 |

* LAP G30 BARS 3′-3″ MIN. AS NECESSARY

## NOTES

1. UNLESS OTHERWISE SHOWN, ALL DIMENSIONS ARE OUT TO OUT OF BARS.
2. PLACE BAR G31 IMMEDIATELY ABOVE LOWER ROW OF PRESTRESSING STRANDS.
3. USE ½″ DIAMETER SEVEN-WIRE STRESS RELIEVED PRESTRESSING STRANDS (GRADE 270).
4. SEE "DIAPHRAGM AND BEARING DETAILS" SHEET FOR BEARING PLATE DETAILS AND BEAM DETAILS AT BENT AND ABUTMENT.
5. USE COATED REINFORCING BARS CONFORMING TO AASHTO DESIGNATION M 284 OR M 111 AND M 31, GRADE 60.
6. FIELD VERIFY REQUIRED GIRDER LENGTH PRIOR TO GIRDER FABRICATION.

¾″ DIA X 2′-6 THREADED ROD WITH CONCRETE ANCHORS AT THE INTERIOR FACE OF THE EXTERIOR BEAMS ONLY. TYPICAL AT INTERMEDIATE DIAPHRAGMS. SEE FRAMING PLAN FOR LOCATIONS.

2″ DIA BLOCK-OUT THRU INTERIOR BEAMS. TYPICAL AT INTERMEDIATE DIAPHRAGMS.

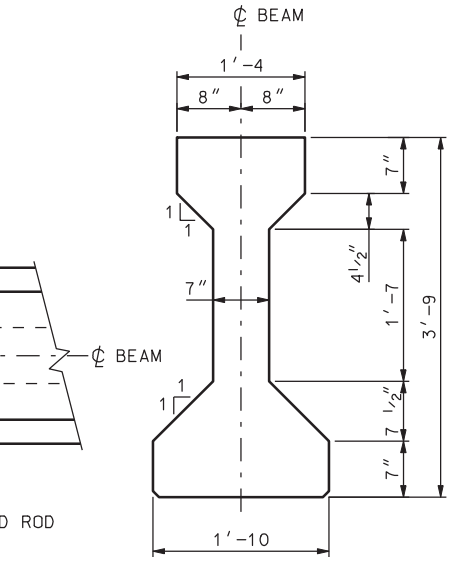


TYPICAL SECTION

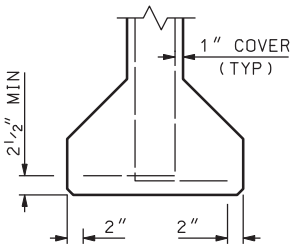


ALTERNATE BAR PLACEMENT

G31 BARS MAY BE ELIMINATED PROVIDED G32 BARS ARE MODIFIED AND PLACED AS SHOWN.

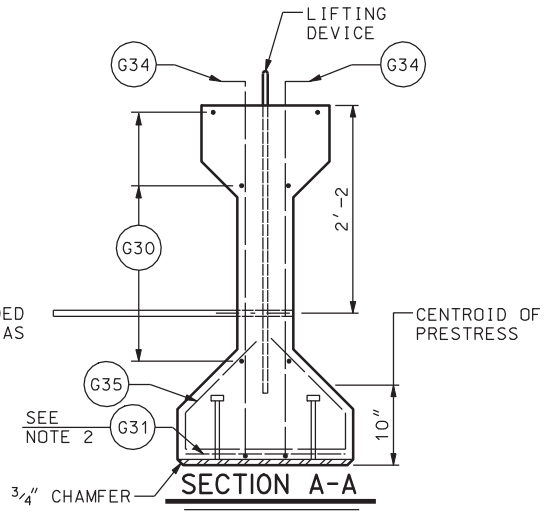


SECTION A-A

### AASHTO TYPE III BEAM

FINAL PRESTRESSING FORCES
AFTER LOSSES = 26.51 KIPS PER STRAND
f′ci = 4000 PSI
f′c = 6000 PSI
4 EXTERIOR BEAMS REQUIRED
4 INTERIOR BEAMS REQUIRED

MIN. AREA PRESTRESSING STEEL = 1.87 SQ. IN.

| NO. | DATE | BY | REMARKS |
|---|---|---|---|
| | | | |

REVISIONS

UTAH DEPARTMENT OF TRANSPORTATION
SALT LAKE CITY, UTAH
STRUCTURES DIVISION

URS

DESIGN PH 12/04 CHECK GTD 12/04
DRAWN DKH 12/04 CHECK PH 12/04
QUANT. CDT 12/04 CHECK CEL 12/04

APPROVAL RECOMM. DATE SENIOR DESIGN ENGR.
APPROVED FOR USE BY UDOT DATE UDOT BRIDGE ENGR.

I-15; CORRIDOR IN UTAH COUNTY
800 NORTH OVERPASS IN OREM
GIRDER DETAILS-SPANS 1 & 3

PROJECT NUMBER SP-15-6(52)241

UTAH
COUNTY

F-13W
DRG. NO.

SHT. 13 OF 26

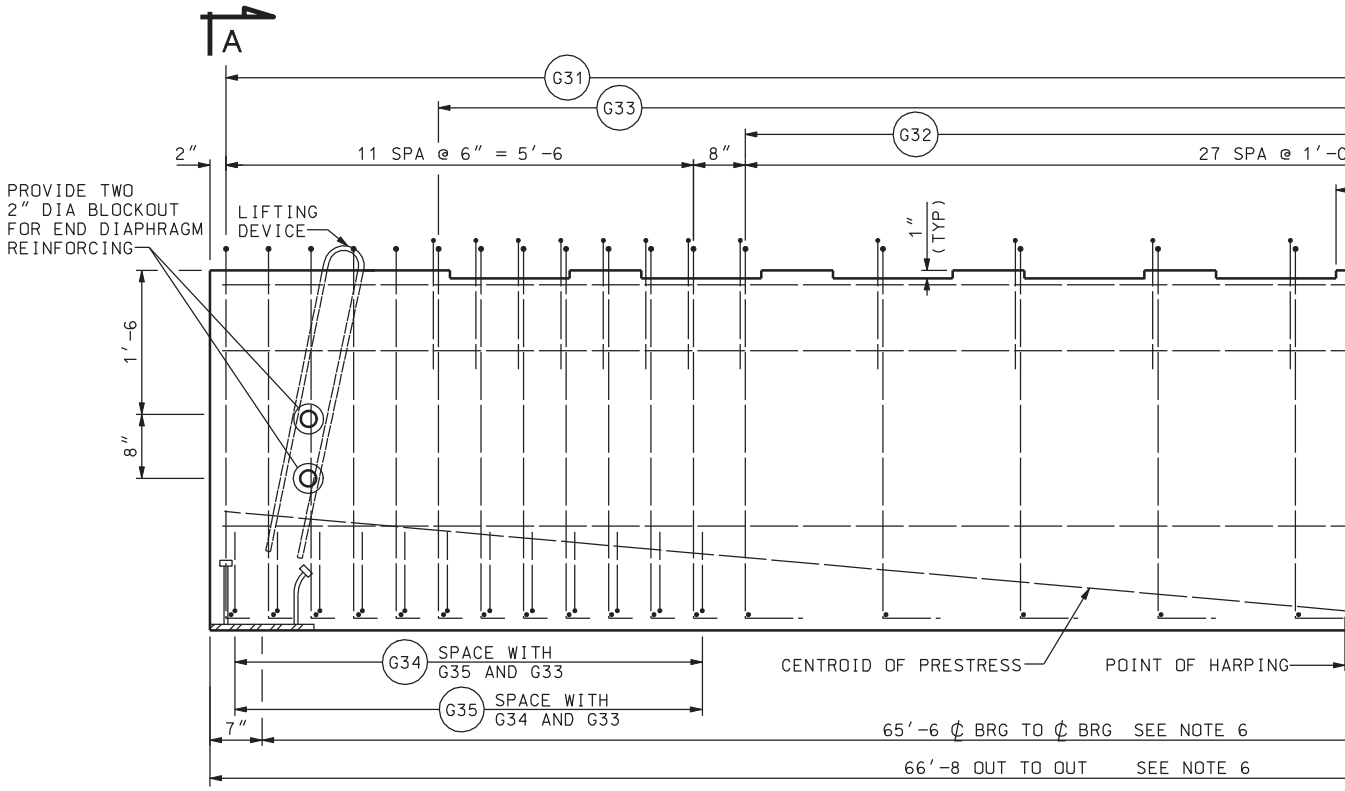


## PARTIAL ELEVATION

(SPAN 2; GIRDERS 1 – 4)

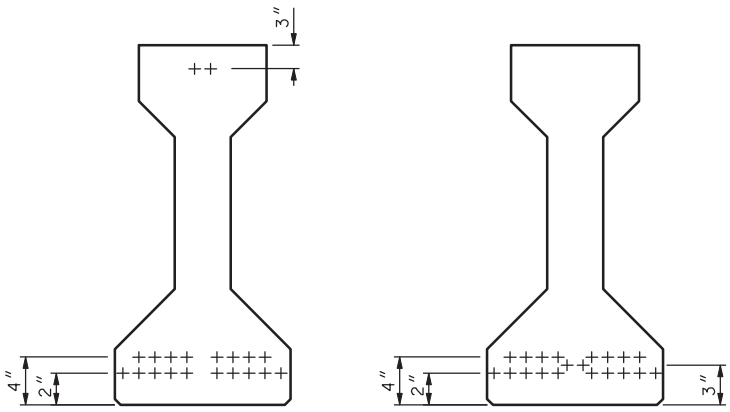


## STRAND PATTERN

(STRAND PATTERN AT ENDS)
NO. OF STRAIGHT STRANDS = 18
NO. OF DRAPED STRANDS = 2

## STRAND PATTERN

(STRAND PATTERN AT CENTER)

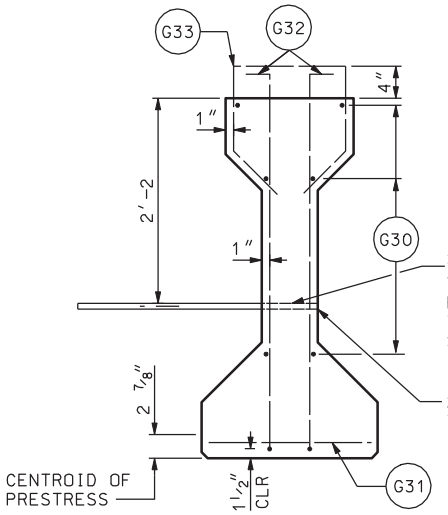


## SECTION B-B

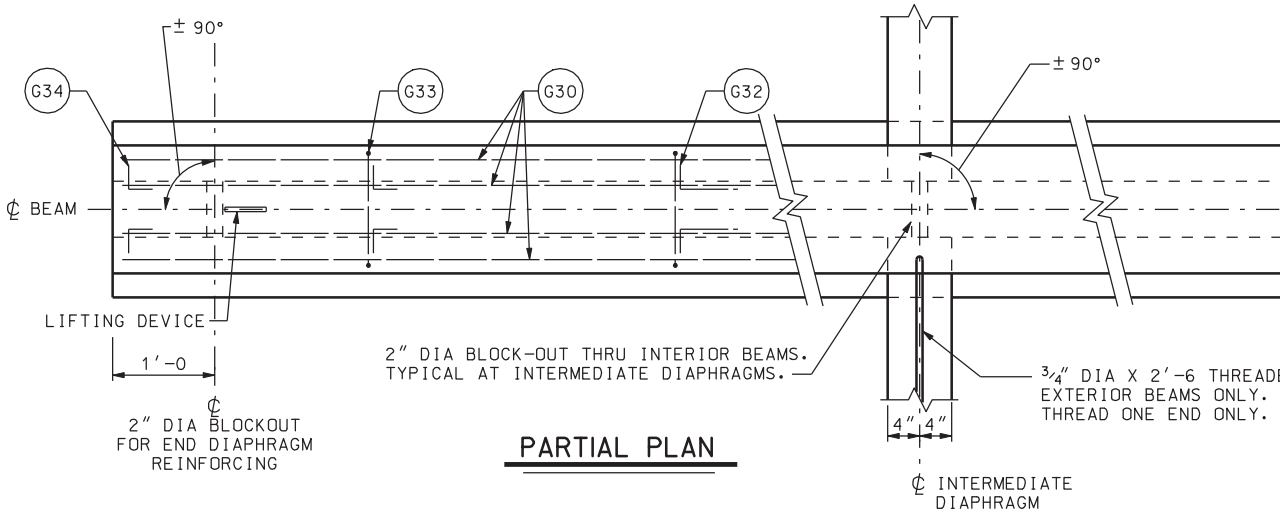


## PARTIAL PLAN

DGN File: IP_PWPcdms1717\4433_F13.14.dgn

02-MAY-2005

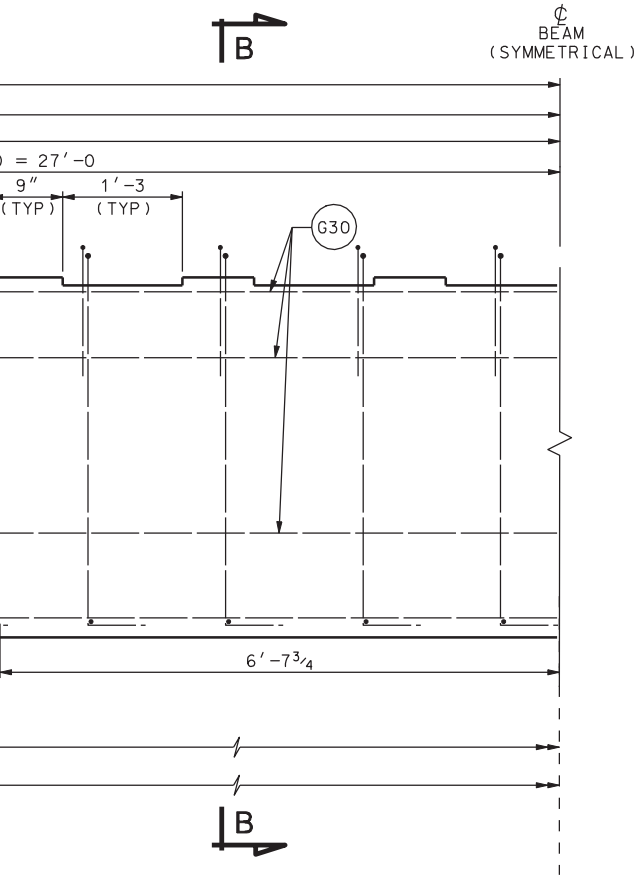


## REINFORCING STEEL SCHEDULE

| MARK | SIZE NO. | LENGTH | NO. REQ'D PER GIRDER | SKETCH |
|---|---|---|---|---|
| * G30 | 5 | 66′-4 | 6 | |
| G31 | 4 | 1′-6 | 79 | |
| G32 | 5 | 5′-1 | 110 | X Y 10″ 3″ Z 4′-0 |
| G33 | 4 | 4′-4 | 69 | 10″ 9″ 1′-2 1 1 |
| G34 | 5 | 4′-6 | 48 | X Y 3″ 3″ Z 4′-0 |
| G35 | 4 | 4′-8 | 24 | 5″ 7″ 1′-8 1 1 |

* LAP G30 BARS 3′-3″ MIN. AS NECESSARY

## NOTES

1. UNLESS OTHERWISE SHOWN, ALL DIMENSIONS ARE OUT TO OUT OF BARS.
2. PLACE BAR G31 IMMEDIATELY ABOVE LOWER ROW OF PRESTRESSING STRANDS.
3. USE ½″ DIAMETER SEVEN-WIRE STRESS RELIEVED PRESTRESSING STRANDS (GRADE 270).
4. SEE "DIAPHRAGM AND BEARING DETAILS" SHEET FOR BEARING PLATE DETAILS AND BEAM DETAILS AT BENT AND ABUTMENT.
5. USE COATED REINFORCING BARS CONFORMING TO AASHTO DESIGNATION M 284 OR M 111 AND M 31, GRADE 60.
6. FIELD VERIFY REQUIRED GIRDER LENGTH PRIOR TO GIRDER FABRICATION.

¾″ DIA X 2′-6 THREADED ROD WITH CONCRETE ANCHORS AT THE INTERIOR FACE OF THE EXTERIOR BEAMS ONLY. TYPICAL AT INTERMEDIATE DIAPHRAGMS. SEE FRAMING PLAN FOR LOCATIONS.

2″ DIA BLOCK-OUT THRU INTERIOR BEAMS. TYPICAL AT INTERMEDIATE DIAPHRAGMS.

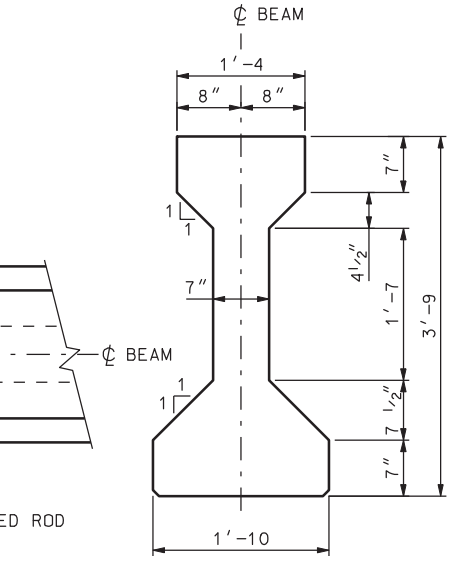


TYPICAL SECTION

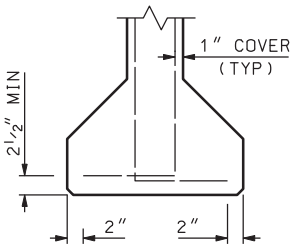


ALTERNATE BAR PLACEMENT

G31 BARS MAY BE ELIMINATED PROVIDED G32 BARS ARE MODIFIED AND PLACED AS SHOWN.

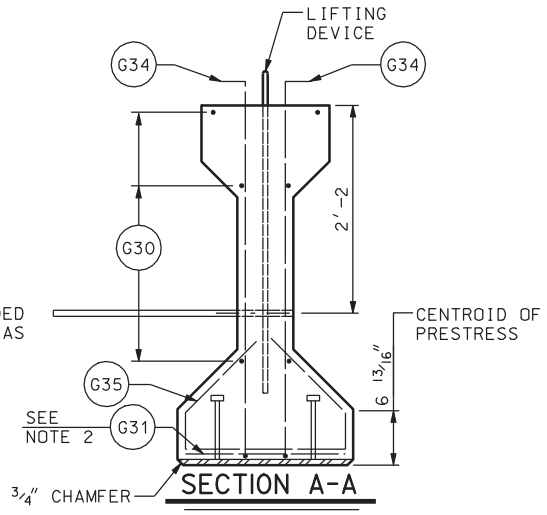


SECTION A-A

### AASHTO TYPE III BEAM

FINAL PRESTRESSING FORCES
AFTER LOSSES = 24.92 KIPS PER STRAND
f′ci = 4000 PSI
f′c = 6000 PSI
2 EXTERIOR BEAMS REQUIRED
2 INTERIOR BEAMS REQUIRED

MIN. AREA PRESTRESSING STEEL = 1.87 SQ. IN.

| NO. | DATE | BY | REMARKS |
|---|---|---|---|
| | | | |

REVISIONS

UTAH DEPARTMENT OF TRANSPORTATION
SALT LAKE CITY, UTAH
STRUCTURES DIVISION

URS

DESIGN PH 12/04 CHECK GTD 12/04
DRAWN DKH 12/04 CHECK PH 12/04
QUANT. CDT 12/04 CHECK CEL 12/04

APPROVAL RECOMM. DATE SENIOR DESIGN ENGR.
APPROVED FOR USE BY UDOT DATE UDOT BRIDGE ENGR.

I-15; CORRIDOR IN UTAH COUNTY
800 NORTH OVERPASS IN OREM
GIRDER DETAILS-SPAN 2

PROJECT NUMBER SP-15-6(52)241

UTAH
COUNTY

F-13W
DRG. NO.

SHT. 14 OF 26

## CONCRETE QUANTITIES

| | |
|---|---|
| INTERMEDIATE DIAPHRAGMS | 7.3 CU YDS |

## NOTES

1. USE 1″ DIA HIGH TENSILE ANCHOR OR APPROVED EQUIVALENT.
2. PLACE BEARING PLATES AND PADS PERPENDICULAR TO GIRDER CENTER LINE.
3. SPACING OF REINFORCING STEEL MAY BE (±) USE THE NUMBER OF BARS SHOWN.

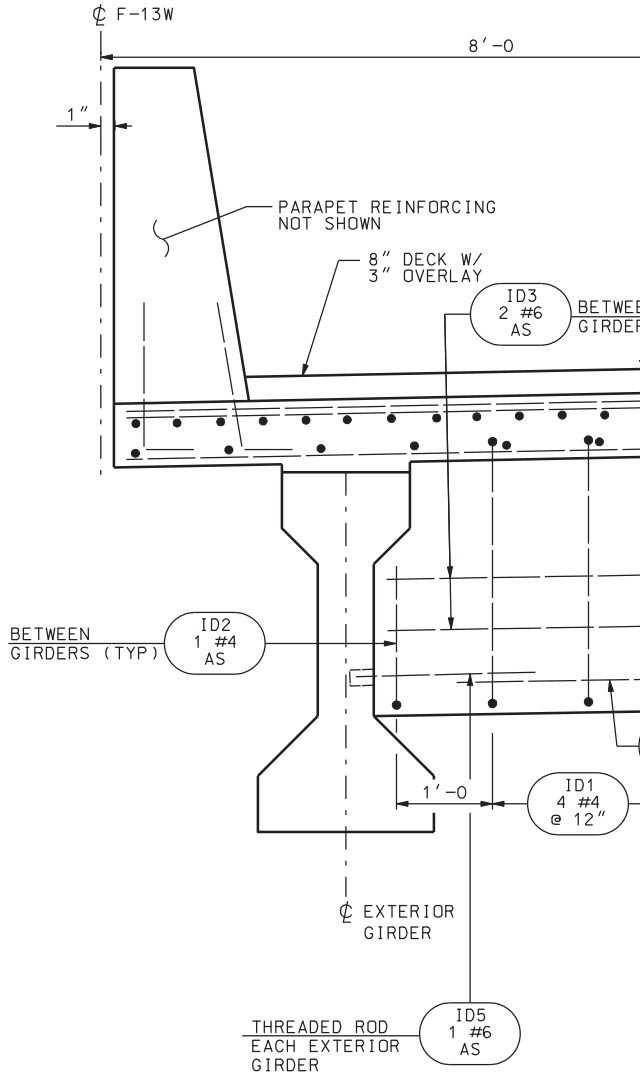


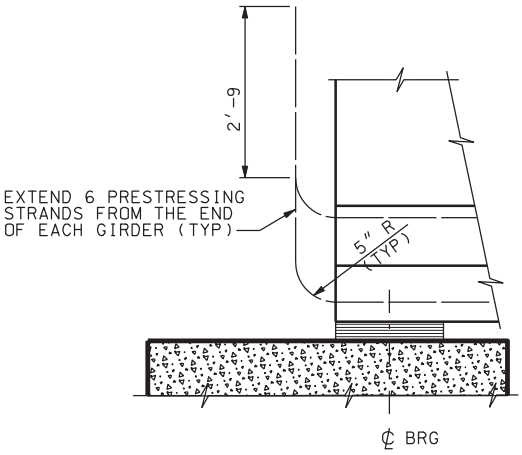


## GIRDER DETAILS AT ABUTMENT

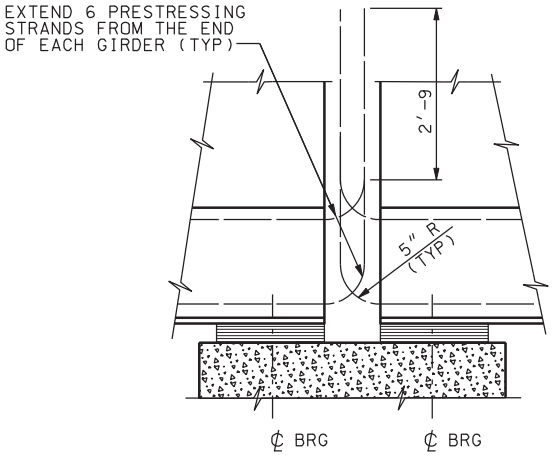


## GIRDER DETAILS AT BENT

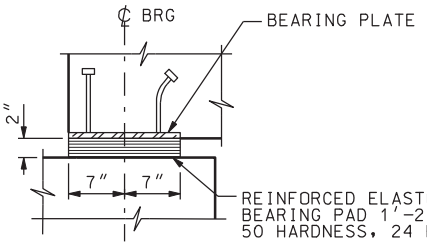


## BEARING DETAIL

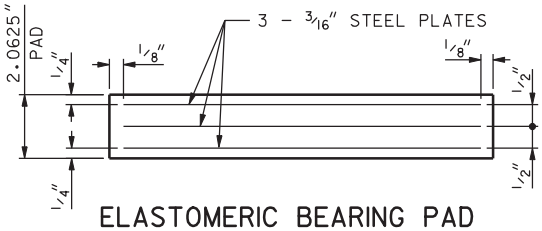


## ELASTOMERIC BEARING PAD

DGN File:IP_PWPcdns1717\4433_F13_15.dgn
02-MAY-2005

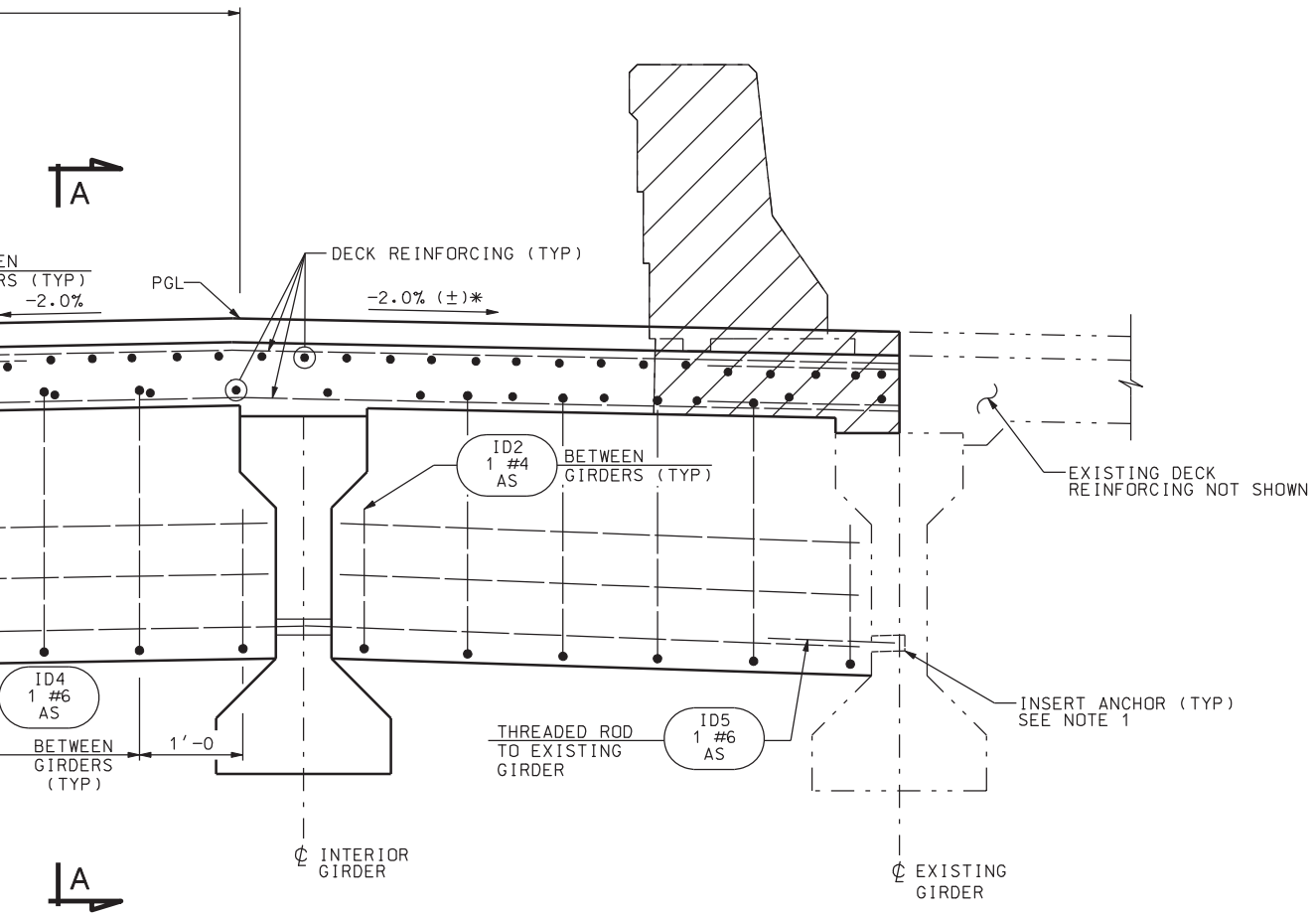


## INTERMEDIATE DIAPHRAGM DETAIL

(TYPICAL REINFORCING BETWEEN GIRDERS)
* MATCH EXISTING CROSS SLOPE

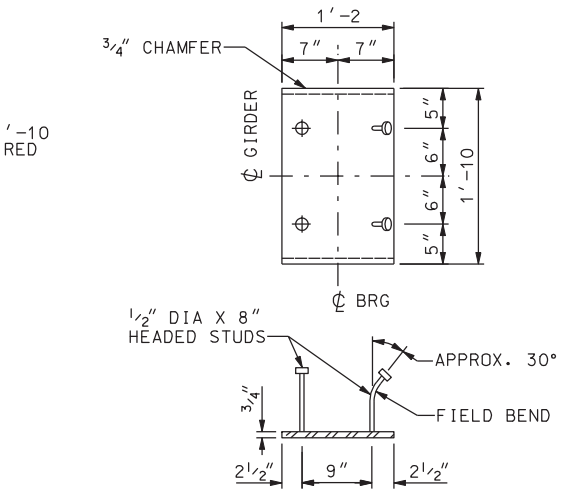


## BEARING PLATE DETAIL

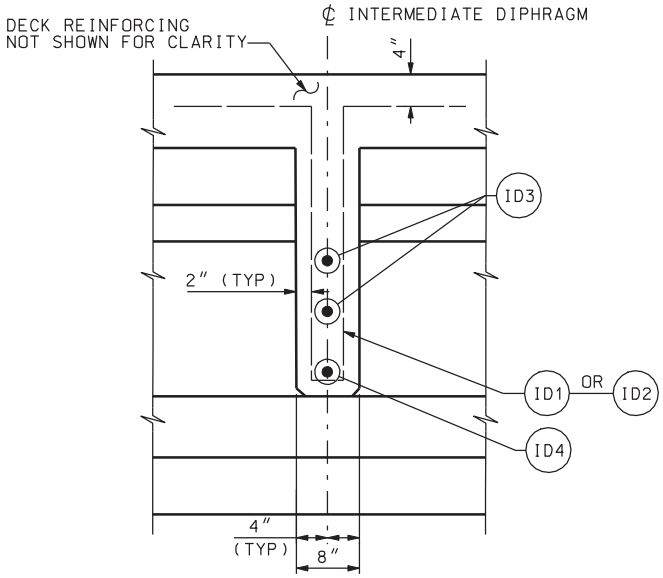


## SECTION A-A

| NO. | DATE | BY | REMARKS |
|---|---|---|---|
| | | | |

REVISIONS

UTAH DEPARTMENT OF TRANSPORTATION
SALT LAKE CITY, UTAH
STRUCTURES DIVISION

URS

DESIGN PH 12/04 CHECK GTD 12/04
DRAWN DKH 12/04 CHECK PH 12/04
QUANT. CDT 12/04 CHECK CEL 12/04

APPROVAL RECOMM. DATE SENIOR DESIGN ENGR.
APPROVED FOR USE BY UDOT DATE UDOT BRIDGE ENGR.

I-15; CORRIDOR IN UTAH COUNTY
800 NORTH OVERPASS IN OREM
DIAPHRAGM & BEARING DETAILS

PROJECT NUMBER SP-15-6(52)241

UTAH
COUNTY

F-13W
DRG. NO.

SHT. 15 OF 26

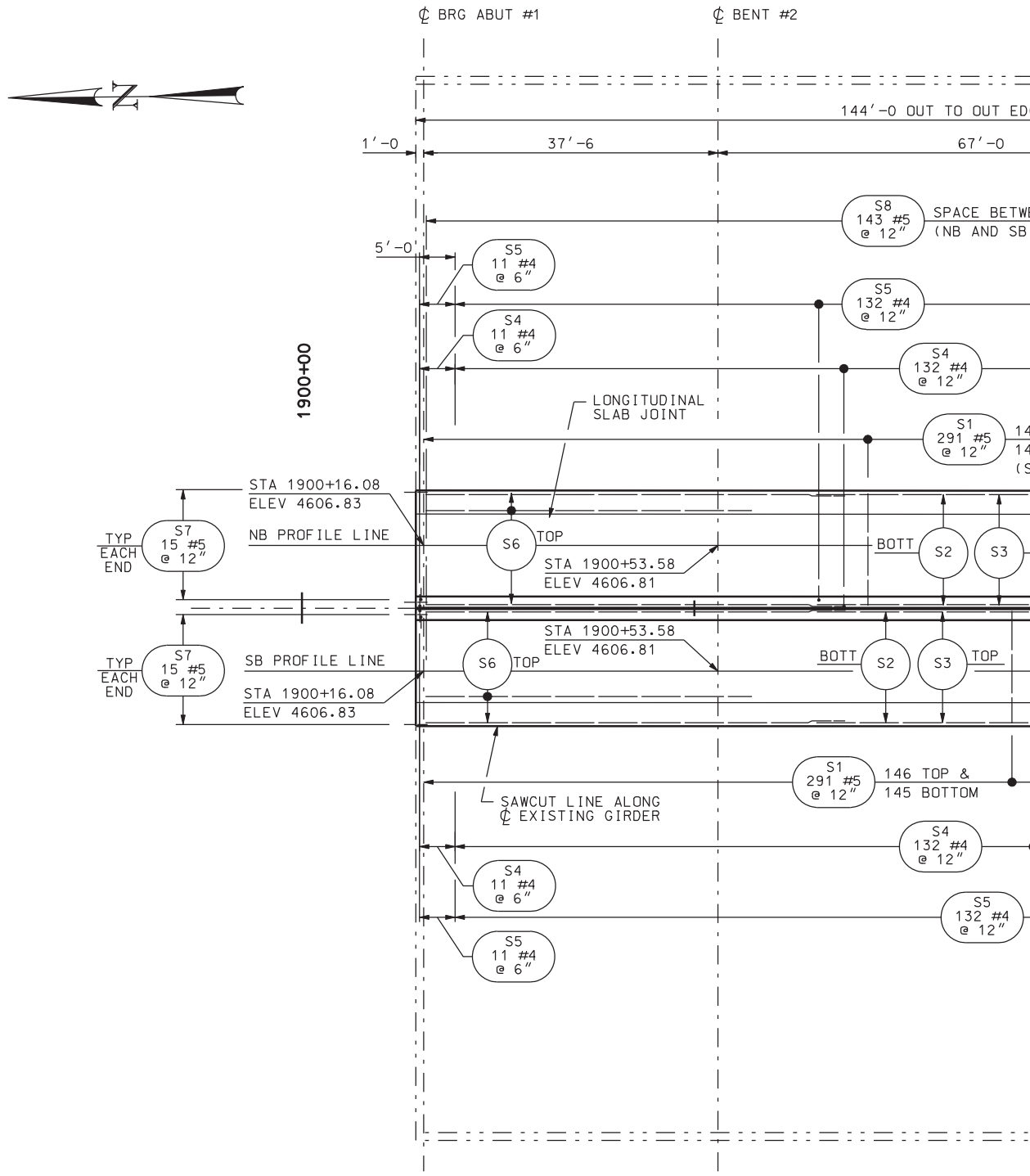


DECK PLA

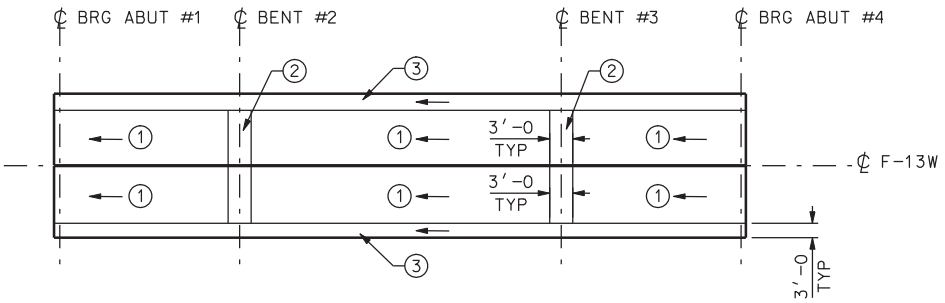


## POUR SEQUENCE

③ SEQUENCE NUMBER

NOTE: PLACE DECK IN SECTIONS AND SEQUENCE AS INDICATED. POUR IN THE DIRECTION INDICATED. POURS ① AND ② CAN BE COMBINED WITH APPROVAL. CONTRACTOR MAY SUBMIT ALTERNATE PROCEDURES FOR APPROVAL.

DGN File:IP_PWPcdns1717\4433_F13.16.dgn
02-MAY-2005

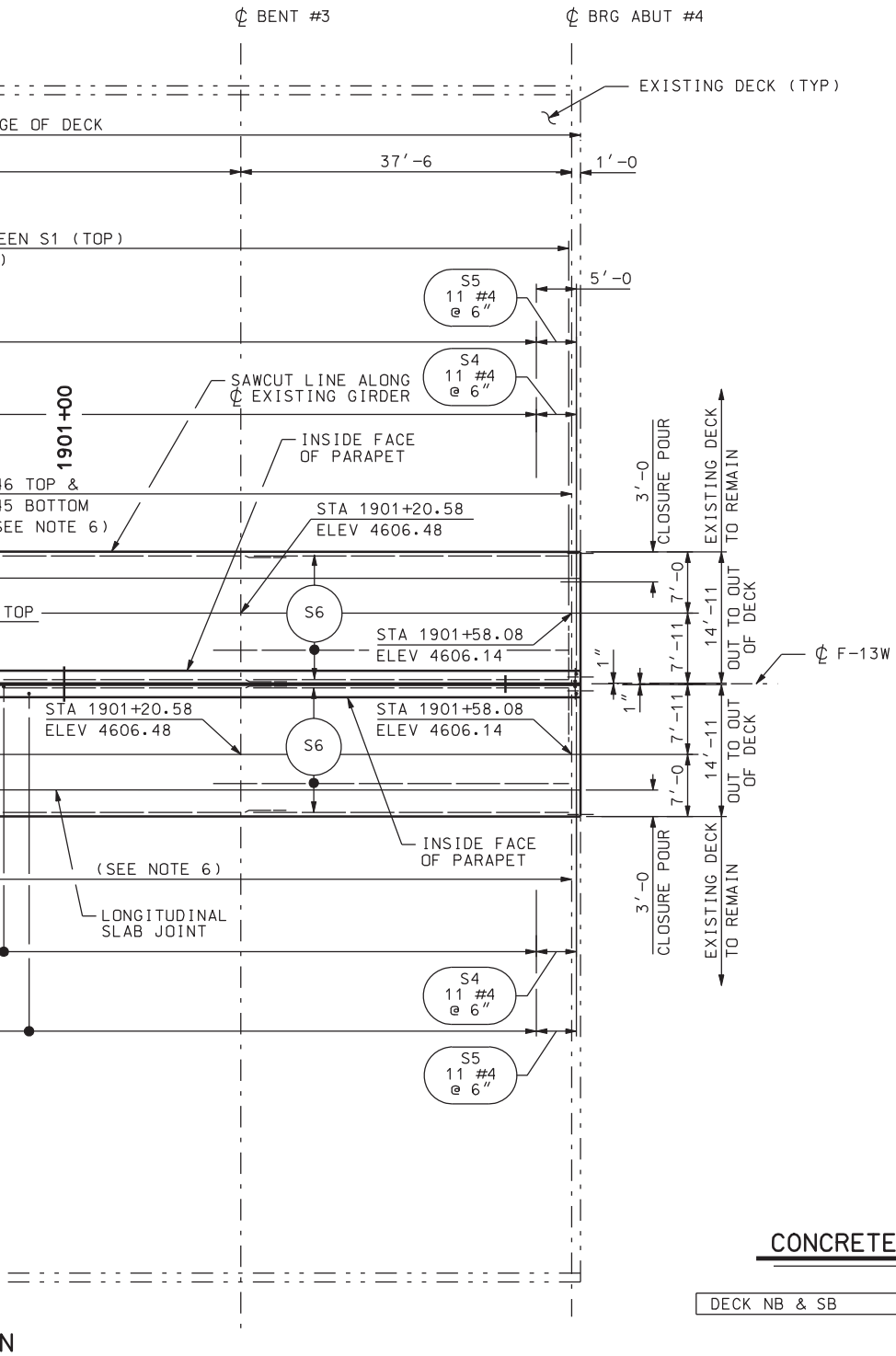


N

## CONCRETE QUANTITIES

| | |
|---|---|
| DECK NB & SB | 108.4 CU YD |

## NOTES

1. REMOVE EXISTING MEDIAN PARAPET AND DECK SLAB TO PREPARE BRIDGE FOR WIDENING. CLEAN AND INCORPORATE EXISTING TRANSVERSE REINFORCING BARS INTO NEW CONSTRUCTION.
2. USE A MINIMUM LAP SPLICE OF 3′-1′ FOR S2 LONGITUDINAL BARS, AND 2′-7″ FOR S3 LONGITUDINAL BARS.
3. SEE "APPROACH SLAB PLAN" FOR APPROACH SLAB DETAILS.
4. SEE "PARAPET DETAILS" FOR PARAPET REINFORCEMENT.
5. SPACING OF REINFORCING STEEL MAY BE (±). USE NUMBER OF BARS SHOWN.
6. STAGGER TOP S1 BARS WITH BOTTOM S1 BARS. PLACE ONE S1 BAR ON TOP AT EACH END.
7. STAY-IN-PLACE FORMS ARE NOT PERMITTED.

| NO. | DATE | BY | REMARKS |
|---|---|---|---|

REVISIONS

UTAH DEPARTMENT OF TRANSPORTATION
SALT LAKE CITY, UTAH
STRUCTURES DIVISION

URS

DESIGN PH 12/04 CHECK GTD 12/04
DRAWN DKH 12/04 CHECK PH 12/04
QUANT. CDT 12/04 CHECK CEL 12/04

APPROVAL RECOMM. DATE SENIOR DESIGN ENGR.
APPROVED FOR USE BY UDOT DATE UDOT BRIDGE ENGR.

I-15; CORRIDOR IN UTAH COUNTY
800 NORTH OVERPASS IN OREM
DECK PLAN
PROJECT NUMBER SP-15-6(52)241

UTAH
COUNTY

F-13W
DRG. NO.

SHT. 16 OF 26

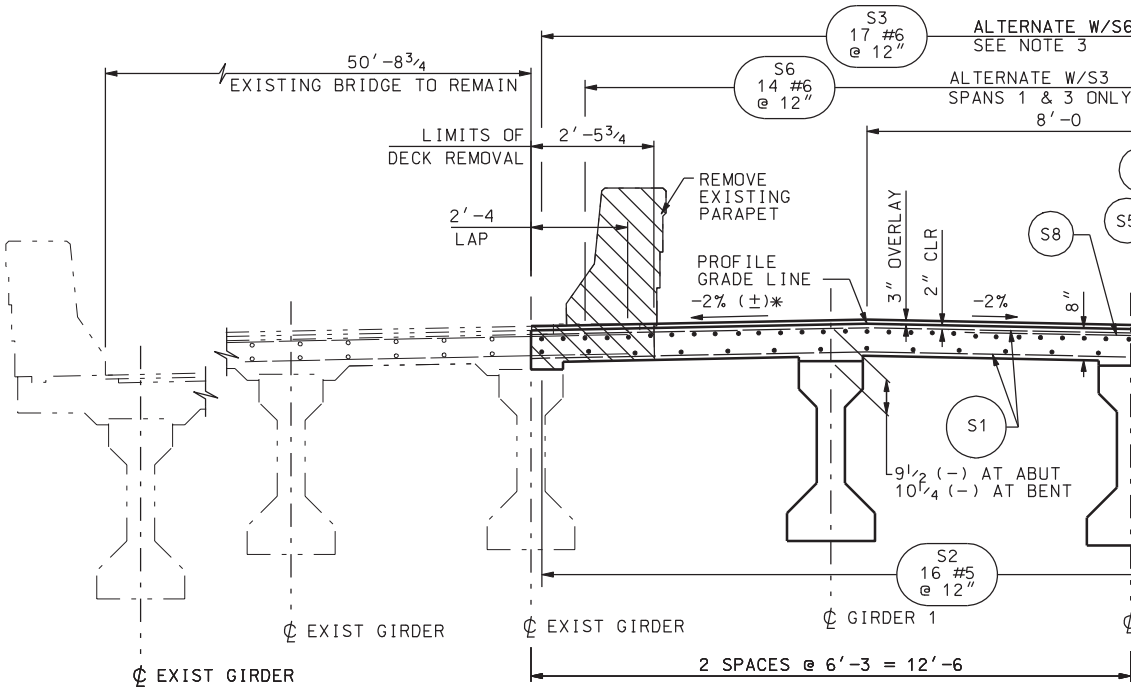


## NORTHBOUND DECK SECTION

LOOKING UPSTATION
* MATCH EXISTING CROSS SLOPE

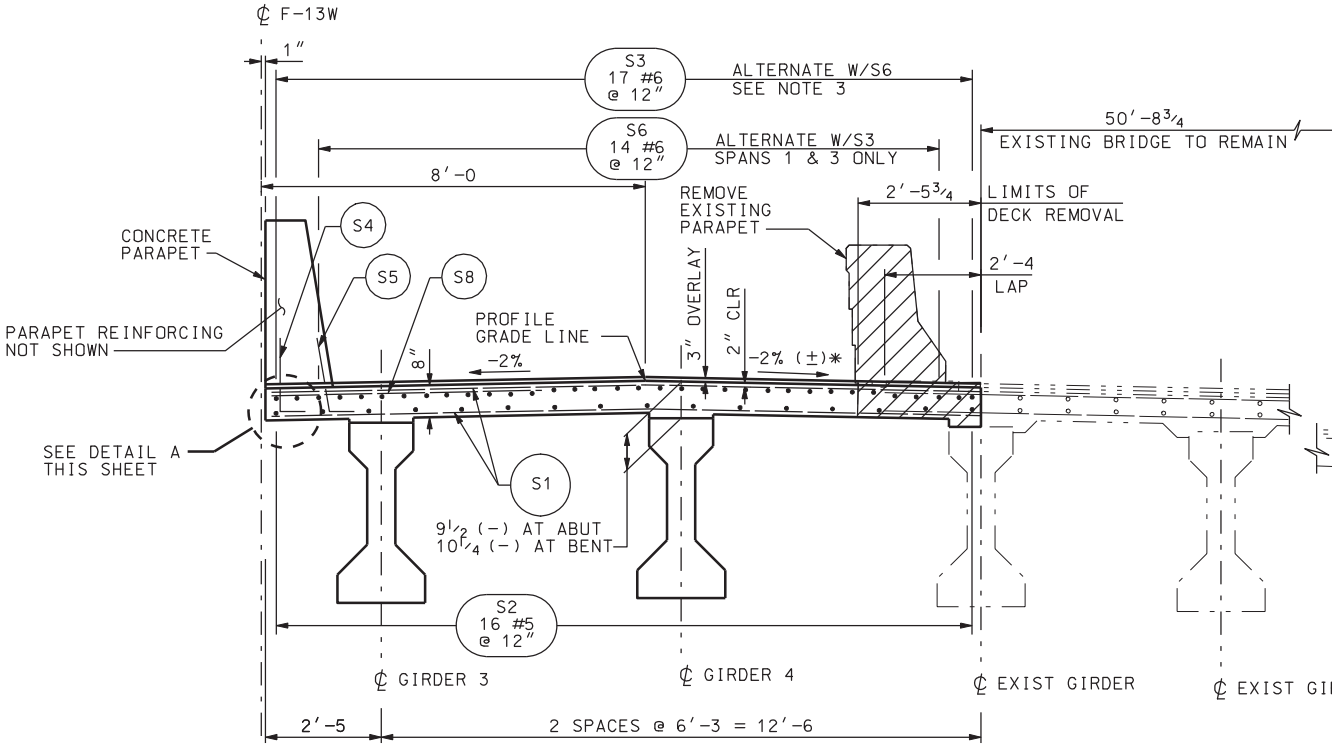


## SOUTHBOUND DECK SECTION

LOOKING UPSTATION
* MATCH EXISTING CROSS SLOPE

DGN File: IP_PWPcdns1717\4433_F13_17.dgn

02-MAY-2005

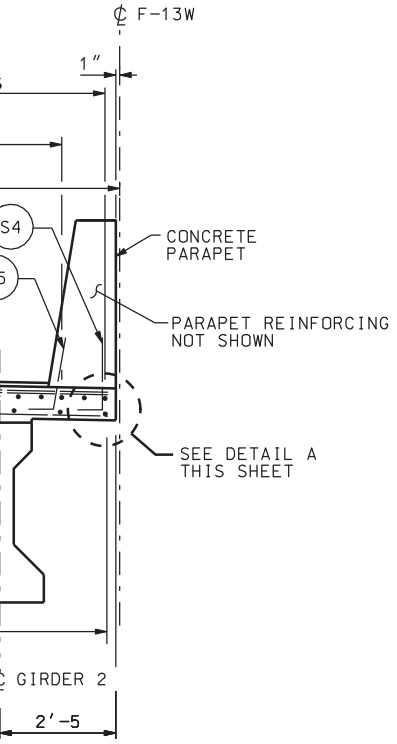


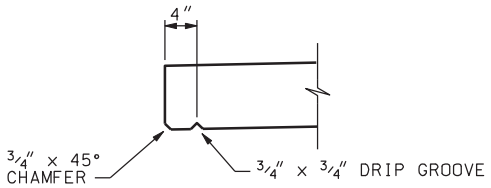


## DETAIL A

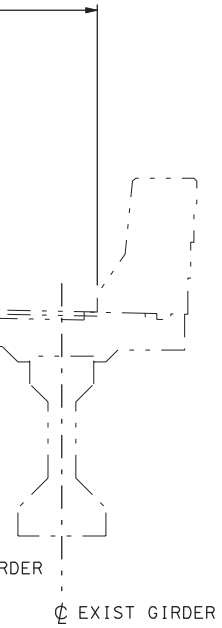


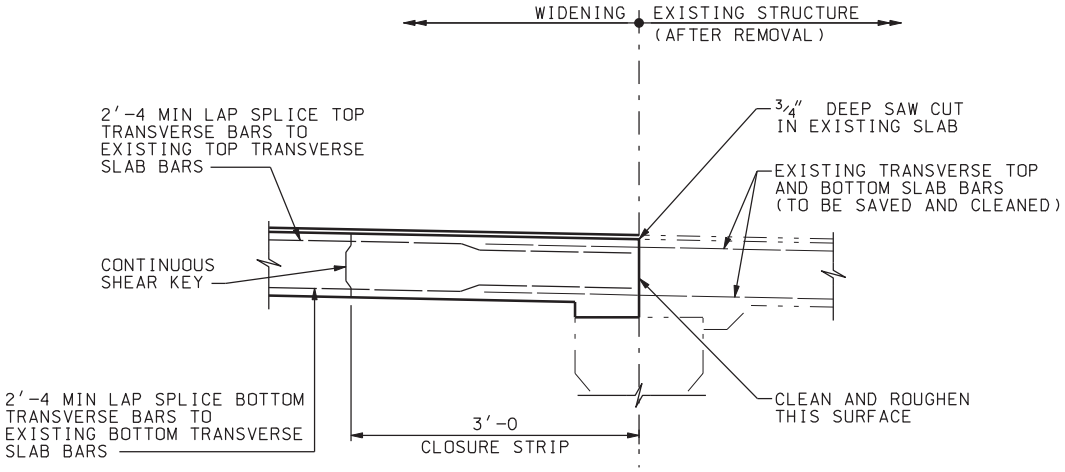


## SLAB CLOSURE

## NOTES

1. DECK AND INSIDE PARAPET REMOVAL INCLUDED IN BID PRICE FOR PREPARE BRIDGE FOR WIDENING.
2. SEE "PARAPET DETAILS" SHEET FOR DESIGN OF CONCRETE PARAPET.
3. STAGGER TOP S3 BAR WITH BOTTOM S2 BAR. PLACE ONE S3 BAR AT EACH END.
4. SEE REHABILITATION PLANS M-91 FOR OVERLAY DETAILS ON EXISTING BRIDGE DECK SECTION.
5. CLEAN AND INCORPORATE EXISTING REINFORCING BARS INTO NEW CONSTRUCTION.
6. SPACING OF REINFORCING MAY BE (±). USE NUMBER OF BARS SHOWN.

| NO. | DATE | BY | REMARKS |
|---|---|---|---|
| | | | |

REVISIONS

UTAH DEPARTMENT OF TRANSPORTATION
SALT LAKE CITY, UTAH
STRUCTURES DIVISION

URS

DESIGN PH 12/04 CHECK GTD 12/04
DRAWN DKH 12/04 CHECK PH 12/04
QUANT. CDT 12/04 CHECK CEL 12/04

APPROVAL RECOMM. DATE SENIOR DESIGN ENGR.
APPROVED FOR USE BY UDOT DATE UDOT BRIDGE ENGR.

I-15; CORRIDOR IN UTAH COUNTY
800 NORTH OVERPASS IN OREM
DECK SECTIONS

PROJECT NUMBER SP-15-6(52)241

UTAH
COUNTY

F-13W
DRG. NO.

SHT. 17 OF 26

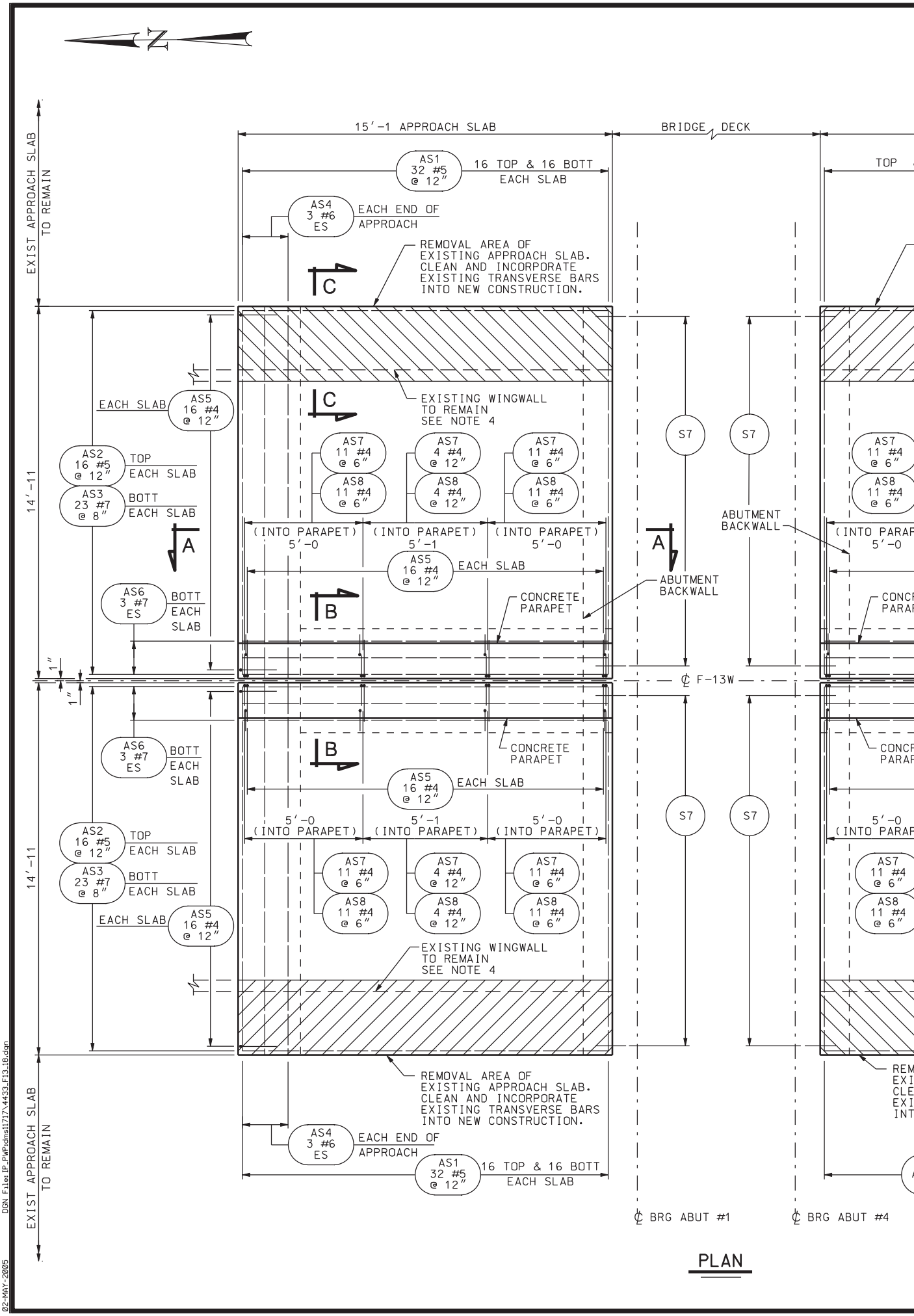


DGN File: IP_PWPcdnsl717\4433_F13_18.dgn

02-MAY-2005

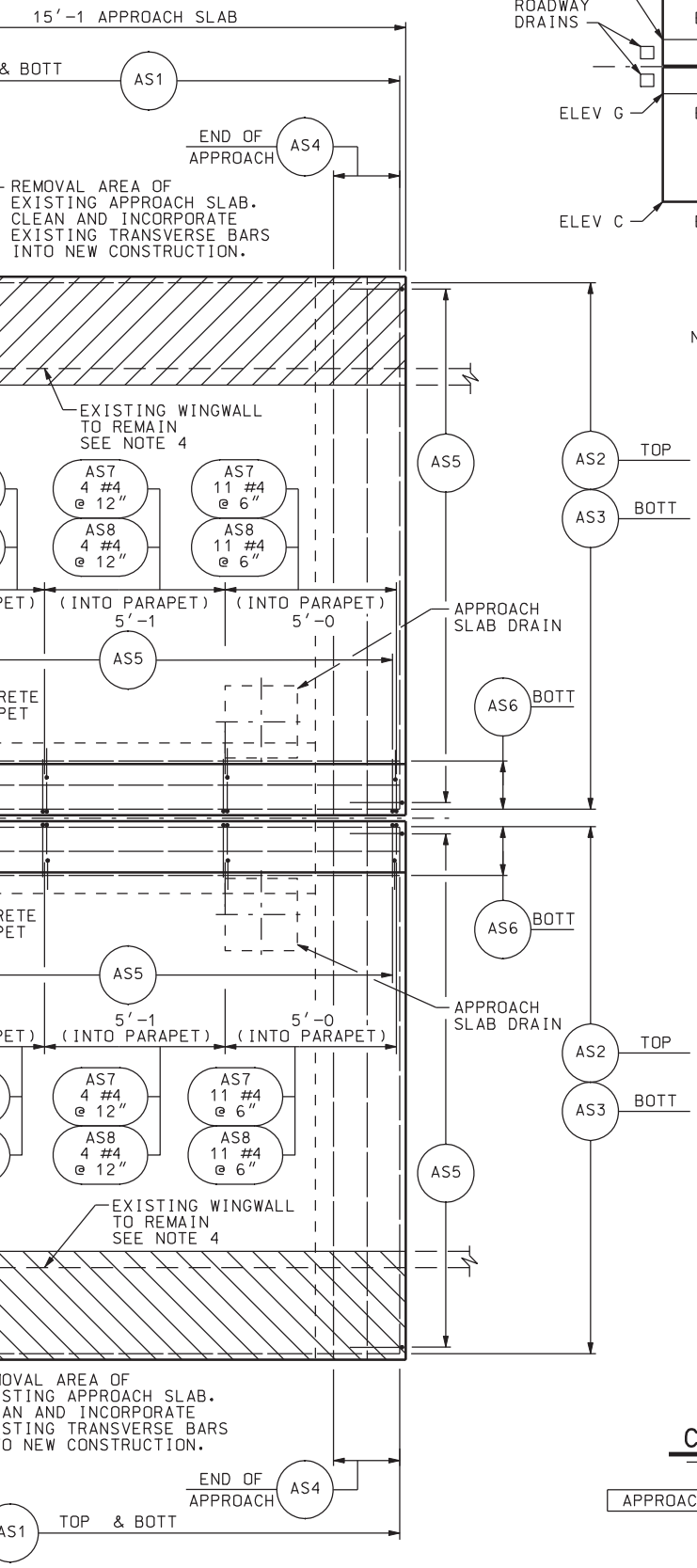


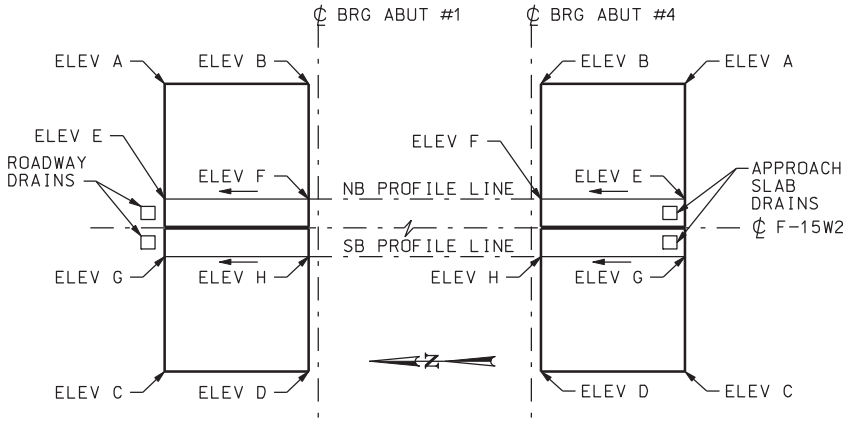


## KEY PLAN

NOTES: 1. PLACE APPROACH SLAB DIRECTION AS INDICATED. CONTRACTOR MAY SUBMIT ALTERNATE PROCEDURES FOR APPROVAL.

2. FOR ELEVATIONS RELATING TO LETTERS SHOWN SEE "SCREED ELEVATIONS" SHEET.

## NOTES

1. FOR SECTIONS A-A, B-B AND C-C, SEE "APPROACH SLAB DETAILS".
2. SEE "APPROACH SLAB DRAIN DETAILS" FOR DRAIN DETAILS.
3. REMOVE EXISTING APPROACH SLAB TO PREPARE BRIDGE FOR WIDENING. CLEAN EXISTING APPROACH SLAB TRANSVERSE REINFORCING TO BE USED IN NEW CONSTRUCTION.
4. REMOVE TOP OF WINGWALL APPROXIMATELY 1'-6 TO PLACE 6" MIN OF RIGID PLASTIC FOAM BETWEEN TOP OF WINGWALL AND BOTTOM OF APPROACH SLAB.
5. SPACING OF REINFORCING MAY BE (±) USE NUMBER OF BARS SHOWN.
6. ADJUST APPROACH SLAB ELEVATIONS TO MATCH EXISTING APPROACH AND ROADWAY ELEVATIONS. IF UNDERMINING FOUND DURING CONSTRUCTION, FILL VOID IN FIELD.

## CONCRETE QUANTITIES

| | |
|---|---|
| APPROACH SLAB NB & SB | 38.2 CU YDS |

| NO. | DATE | BY | REMARKS |
|---|---|---|---|

REVISIONS

UTAH DEPARTMENT OF TRANSPORTATION
SALT LAKE CITY, UTAH
STRUCTURES DIVISION

URS

DESIGN PH 12/04 CHECK GTD 12/04
DRAWN DKH 12/04 CHECK PH 12/04
QUANT. CDT 12/04 CHECK CEL 12/04

APPROVAL RECOMM. DATE SENIOR DESIGN ENGR.
APPROVED FOR USE BY UDOT DATE UDOT BRIDGE ENGR.

I-15; CORRIDOR IN UTAH COUNTY
800 NORTH OVERPASS IN OREM
APPROACH SLAB PLAN

PROJECT NUMBER SP-15-6(52)241

UTAH
COUNTY

F-13W
DRG. NO.

SHT. 18 OF 26

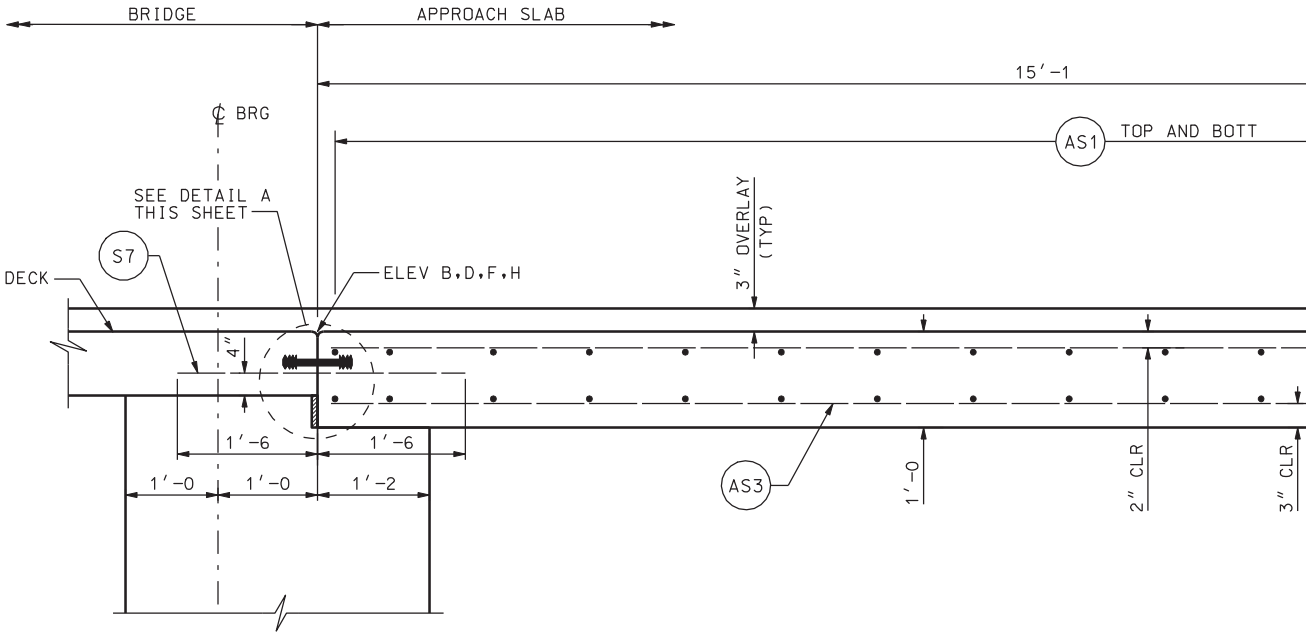


SECTION A-A

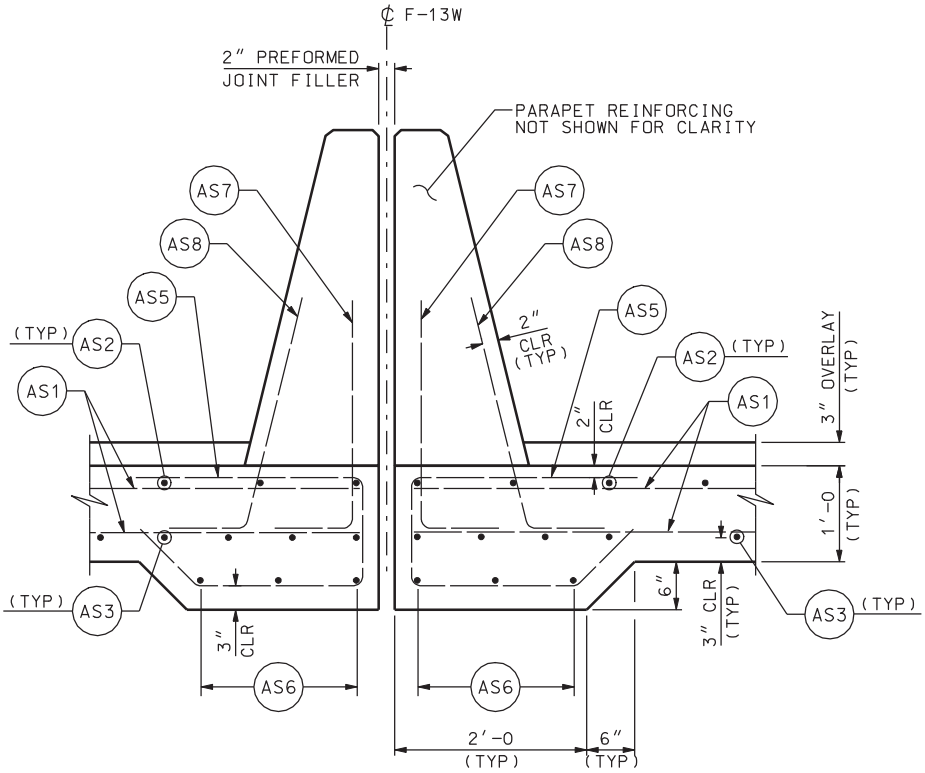


SECTION B-B

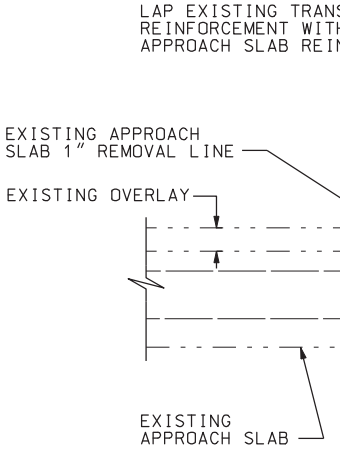


NOTE: 1. SEE "PREP
2. LONGITUDI

DGN File:IP_PWPcdns1717\4433_F13_19.dgn

02-MAY-2005

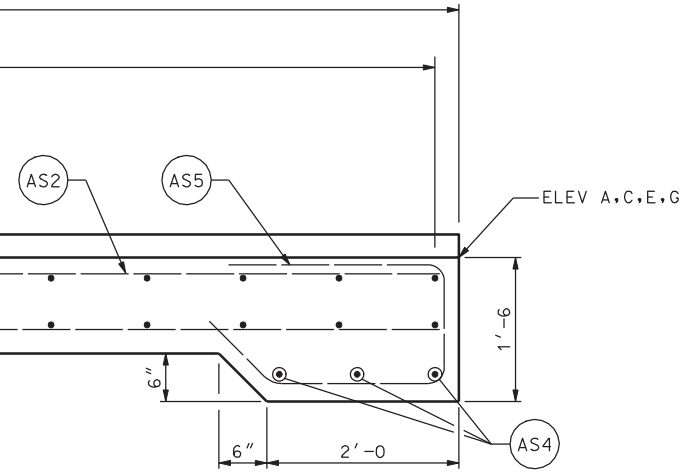


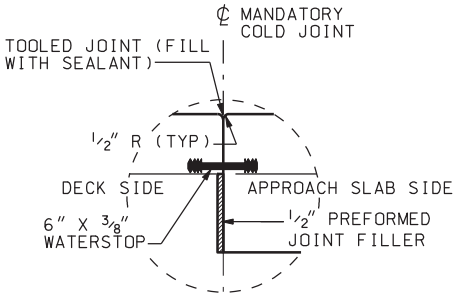


DETAIL A

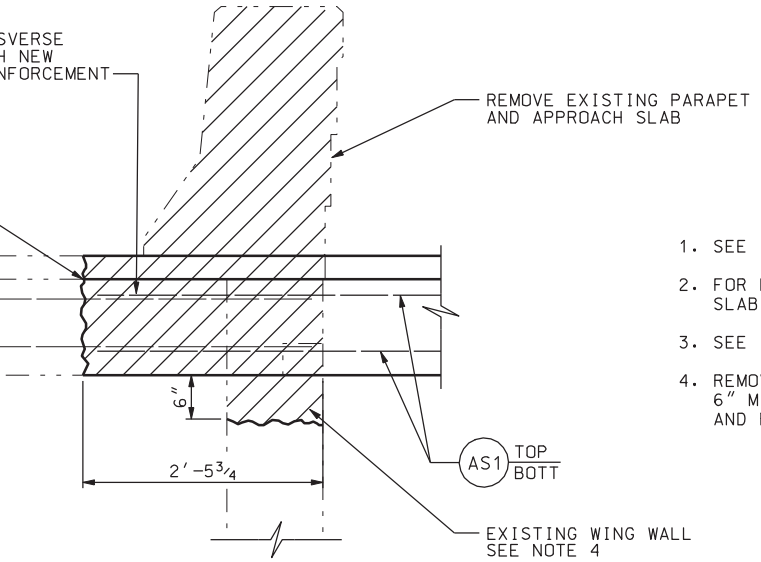


ARE BRIDGE FOR WIDENING" SPECIFICATION.
NAL REINFORCING NOT SHOWN FOR CLARITY.

SECTION C-C

## NOTES

1. SEE "PARAPET DETAILS" SHEET FOR PARAPET REINFORCEMENT.
2. FOR LOCATION OF SECTIONS A-A, B-B AND C-C, SEE "APPROACH SLAB PLAN".
3. SEE "SCREED ELEVATIONS" FOR ELEVATIONS.
4. REMOVE TOP OF WINGWALL APPROXIMATELY 1'-6. PLACE 6" MIN OF RIGID PLASTIC FOAM BETWEEN TOP OF WINGWALL AND BOTTOM OF APPROACH SLAB.

| NO. | DATE | BY | REMARKS |
|---|---|---|---|

REVISIONS

UTAH DEPARTMENT OF TRANSPORTATION
SALT LAKE CITY, UTAH
STRUCTURES DIVISION

URS

DESIGN PH 12/04 CHECK GTD 12/04
DRAWN DKH 12/04 CHECK PH 12/04
QUANT. CDT 12/04 CHECK CEL 12/04

APPROVAL RECOMM. DATE SENIOR DESIGN ENGR.
APPROVED FOR USE BY UDOT DATE UDOT BRIDGE ENGR.

I-15; CORRIDOR IN UTAH COUNTY
800 NORTH OVERPASS IN OREM
APPROACH SLAB DETAILS

PROJECT NUMBER SP-15-6(52)241

UTAH
COUNTY

F-13W
DRG. NO.

SHT. 19 OF 26

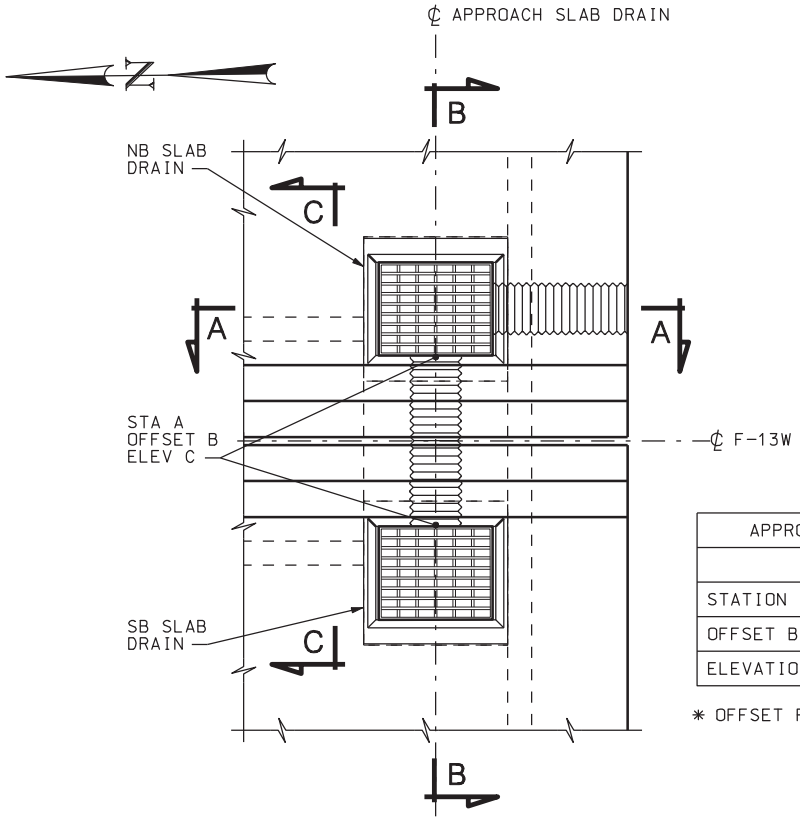


| APPROACH SLAB DRAIN LOCATIONS | | |
|---|---|---|
| | NB DRAIN | SB DRAIN |
| STATION A | 1901+74.17 | 1901+74.17 |
| OFFSET B ✱ | 1.67 LT | 1.67 RT |
| ELEVATION C | 4606.08 | 4606.08 |

✱ OFFSET FROM ℄ F-13W

## TYPICAL PLAN

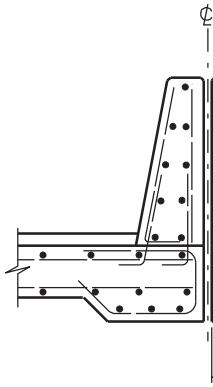

## SECTIO

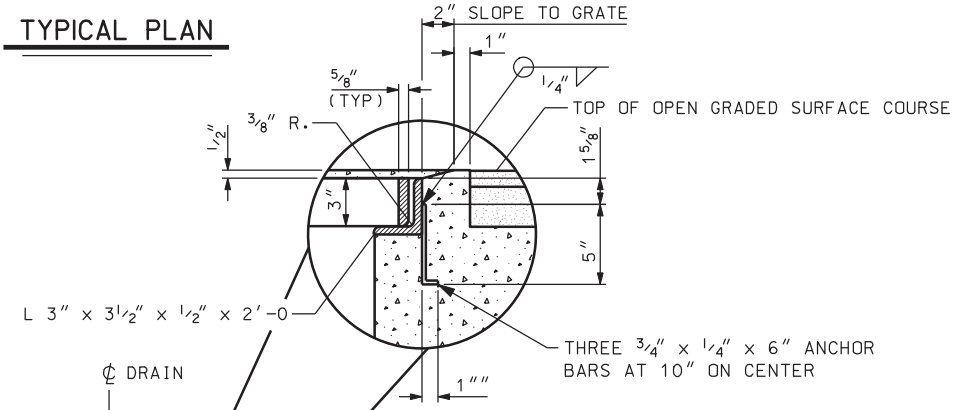


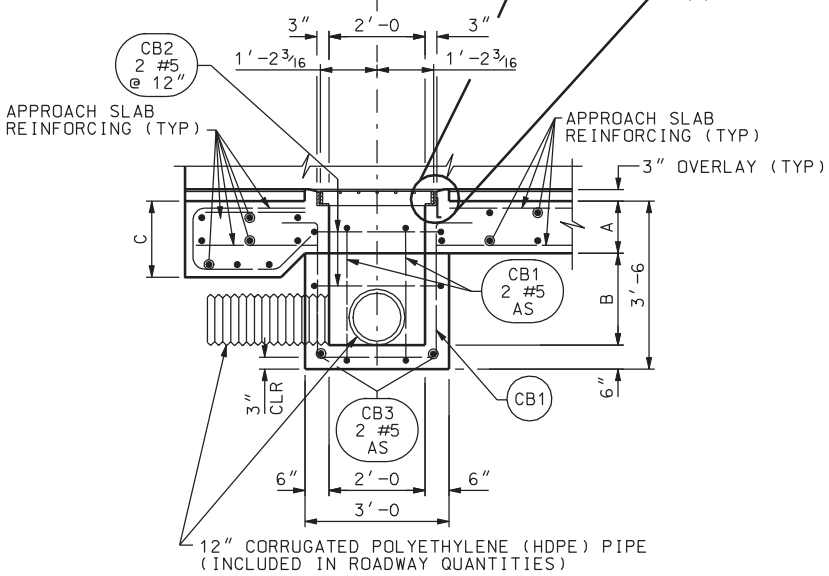


## SECTION A-A

| LOCATION | A | B | C |
|---|---|---|---|
| APPROACH SLAB DRAIN | 1′-0 | 2′-0 | 1′-6 |

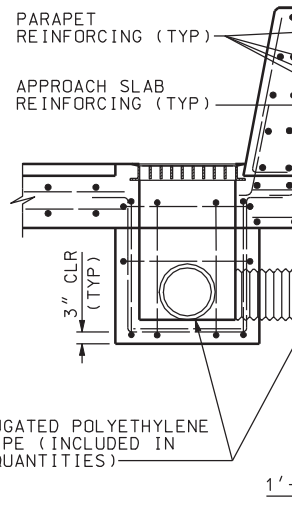


## SECT

BOTH SIDES IDENTICAL.
CALLOUTS SHOWN ON C

DGN File:IP_PWPcdns1717\4433_F13_20.dgn

02-MAY-2005

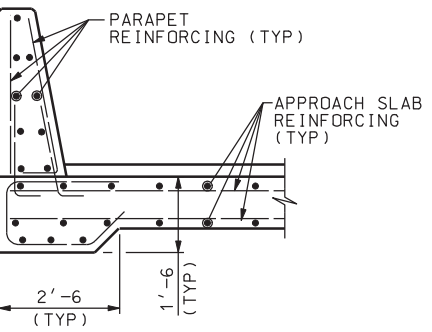


ON C-C

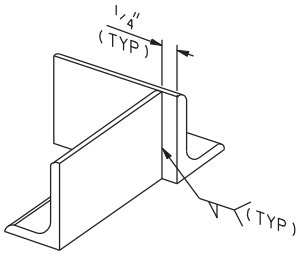


DETAIL D

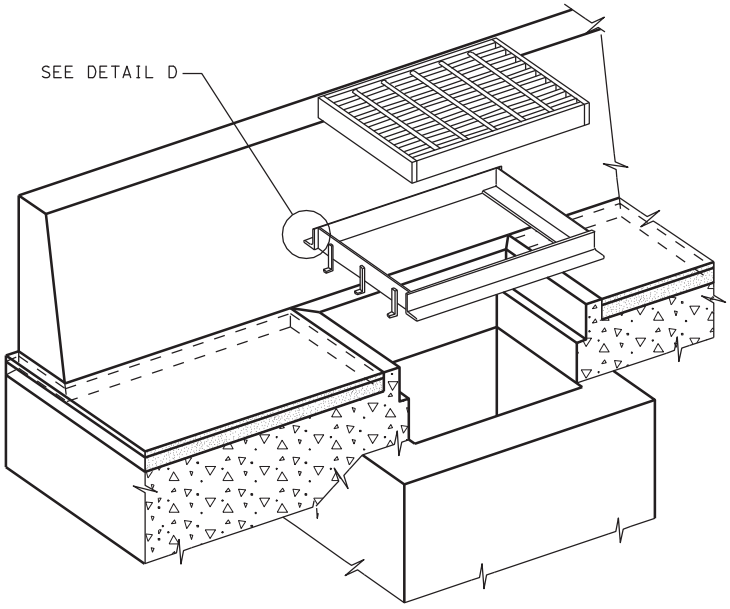


ISOMETRIC

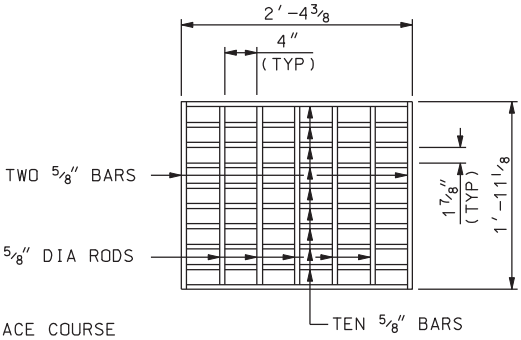


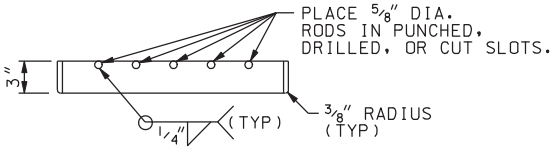


GRATE DETAIL

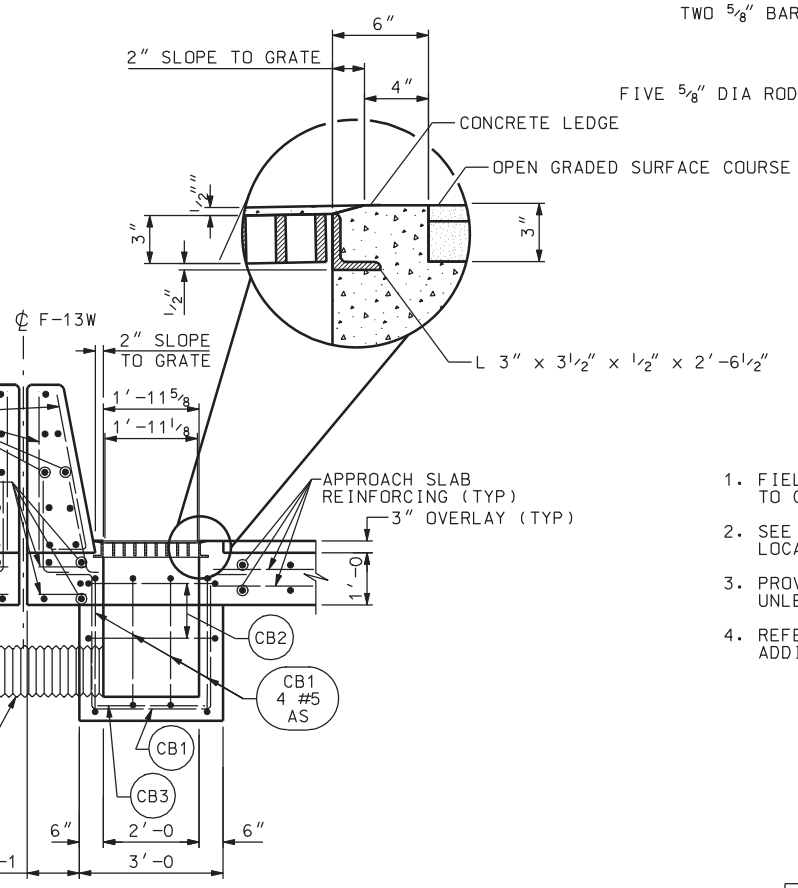


TION B-B

DIMENSIONS AND REINFORCING
ONE SIDE ONLY FOR CLARITY.

1. FIELD CUT OR BEND APPROACH SLAB REINFORCING TO CLEAR APPROACH SLAB DRAINS.
2. SEE "APPROACH SLAB PLAN" SHEET FOR ACTUAL LOCATIONS OF DRAINS.
3. PROVIDE 2" MIN COVER TO REINFORCING STEEL UNLESS NOTED OTHERWISE.
4. REFER TO ROADWAY DETAILS SHEET DT-15 FOR ADDITIONAL DETAILS.

CONCRETE QUANTITIES

| | |
|---|---|
| 2 CATCH BASINS AT 0.5 CU YDS = | 1.0 CU YDS |

STRUCTURAL STEEL QUANTITY

| | |
|---|---|
| 2 GRATE AND FRAMES AT 273 LBS = | 546 LBS |

| NO. | DATE | BY | REMARKS |
|---|---|---|---|
| | | | |

REVISIONS

UTAH DEPARTMENT OF TRANSPORTATION
SALT LAKE CITY, UTAH
STRUCTURES DIVISION

URS

DESIGN PH 12/04 CHECK GTD 12/04
DRAWN DKH 12/04 CHECK PH 12/04
QUANT. CDT 12/04 CHECK CEL 12/04

APPROVAL RECOMM. DATE SENIOR DESIGN ENGR.
APPROVED FOR USE BY UDOT DATE UDOT BRIDGE ENGR.

I-15; CORRIDOR IN UTAH COUNTY
800 NORTH OVERPASS IN OREM
APPROACH SLAB DRAIN DETAILS

PROJECT NUMBER SP-15-6(52)241

UTAH
COUNTY

F-13W
DRG. NO.

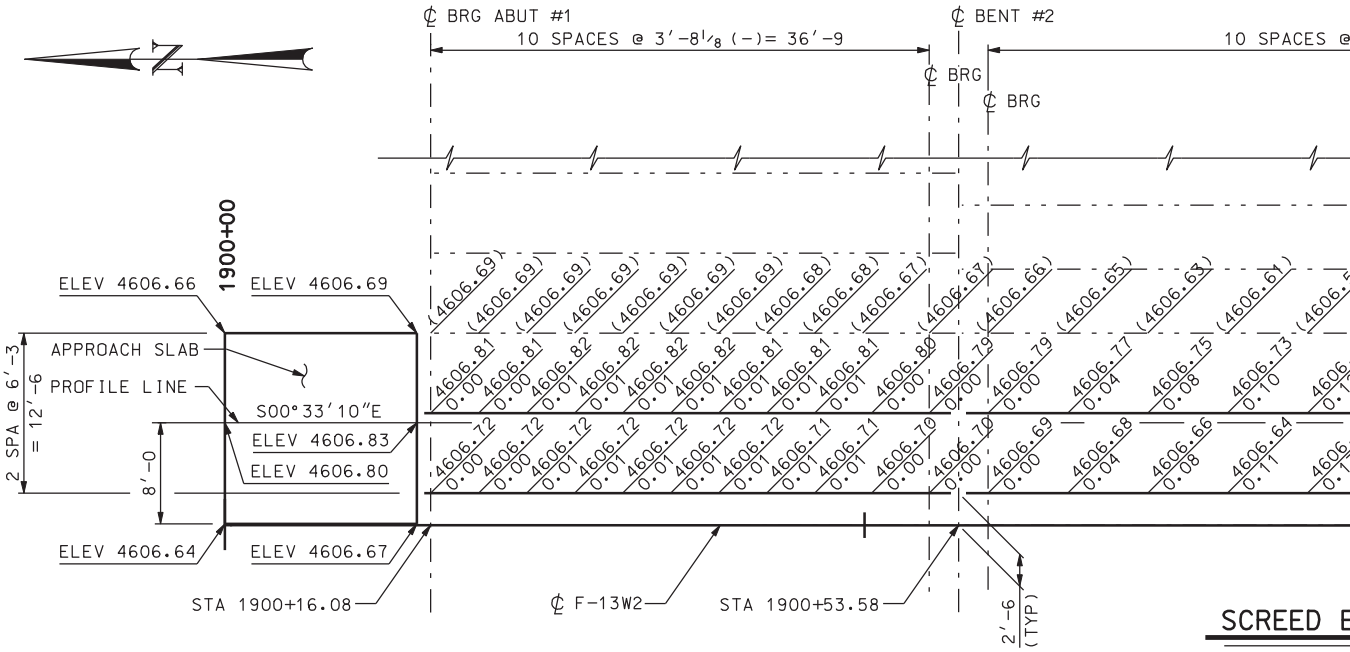


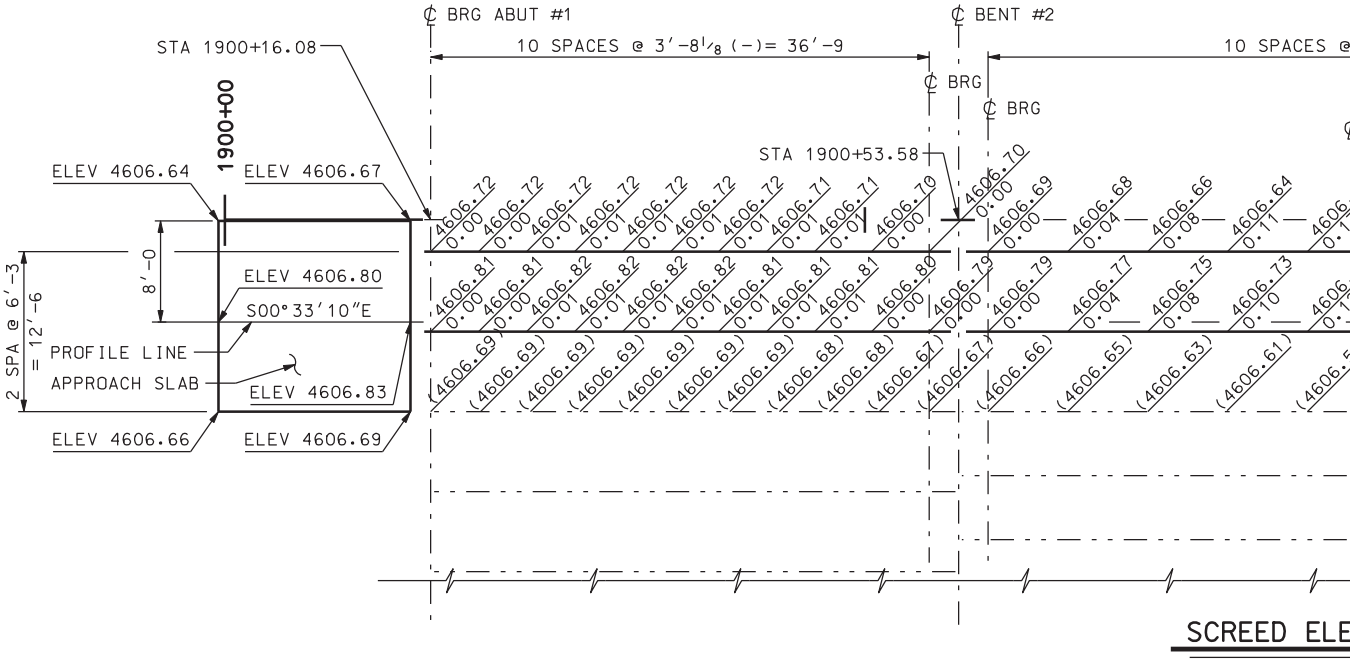


## NOTES

1. FIGURES ABOVE THE LINES ARE TOP OF CONCRETE DECK ELEVATION (FEET). FIGURES BELOW THE LINES ARE DEAD LOAD DEFLECTION (FEET) AND ARE TO BE ADDED TO ELEVATIONS SHOWN TO OBTAIN SCREED ELEVATIONS.
2. FIGURES SHOWN IN PARENTHESIS ARE APPROXIMATE TOP OF EXISTING CONCRETE DECK ELEVATION (FEET) BASED ON SURVEY INFORMATION.
3. LONGITUDINAL ELEVATIONS ARE MEASURED ALONG SURVEY LINE.
4. STATIONS AND OFFSETS ARE FROM ℄ F-13W.
5. ADJUST APPROACH SLAB ELEVATIONS TO MATCH EXISTING APPROACH AND ROADWAY ELEVATIONS. IF UNDERMINING FOUND DURING CONSTRUCTION, FILL VOID IN FIELD.

DGN File: IP_PWPcdns1717\4433_F13_21.dgn
02-MAY-2005

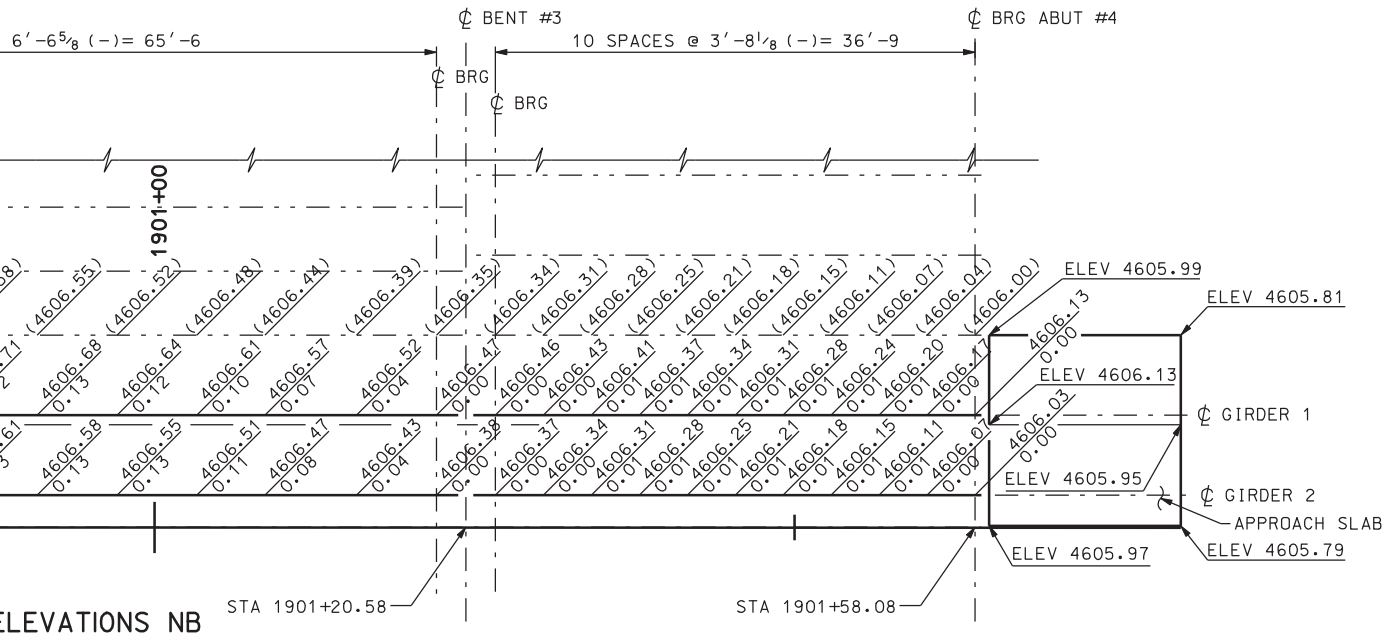


ELEVATIONS NB

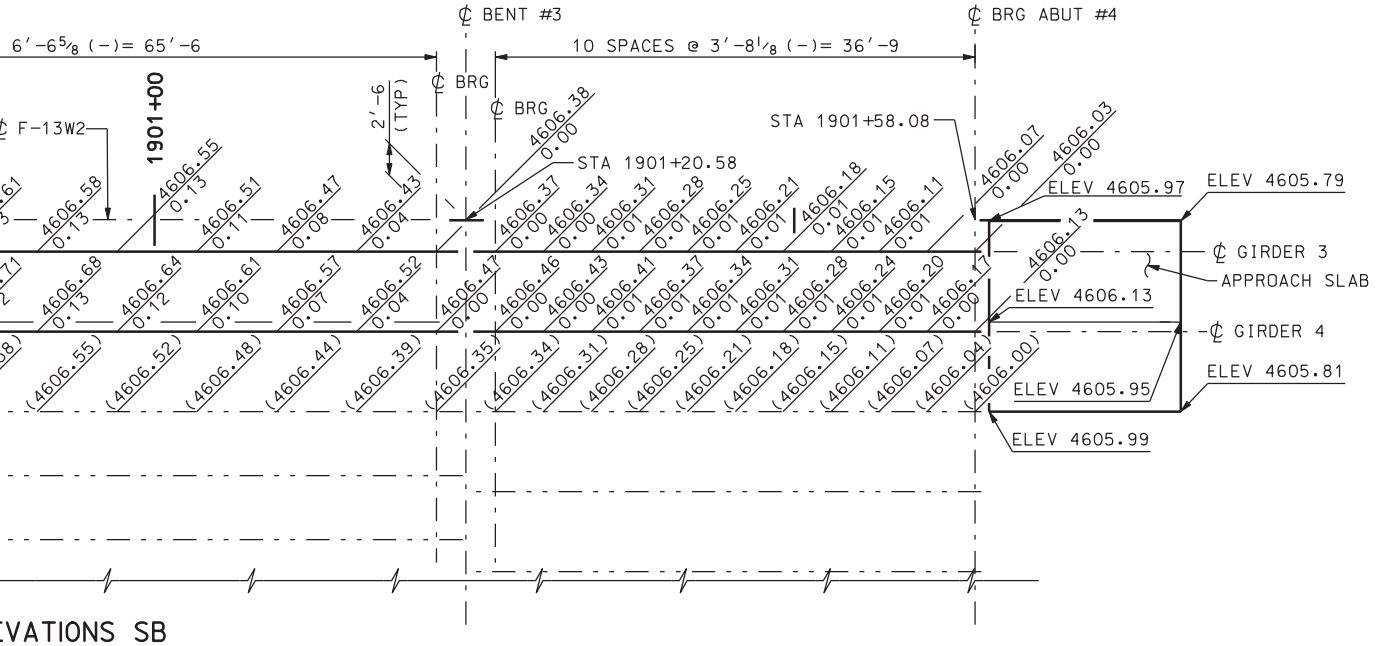


EVATIONS SB

| NO. | DATE | BY | REMARKS |
|---|---|---|---|

REVISIONS

UTAH DEPARTMENT OF TRANSPORTATION
SALT LAKE CITY, UTAH
STRUCTURES DIVISION

URS

DESIGN PH 12/04 CHECK GTD 12/04
DRAWN DKH 12/04 CHECK PH 12/04
QUANT. CDT 12/04 CHECK CEL 12/04

APPROVAL RECOMM. DATE SENIOR DESIGN ENGR.
APPROVED FOR USE BY UDOT DATE UDOT BRIDGE ENGR.

I-15; CORRIDOR IN UTAH COUNTY
800 NORTH OVERPASS IN OREM
SCREED ELEVATIONS

PROJECT NUMBER SP-15-6(52)241

UTAH
COUNTY

F-13W
DRG. NO.

SHT. 21 OF 26

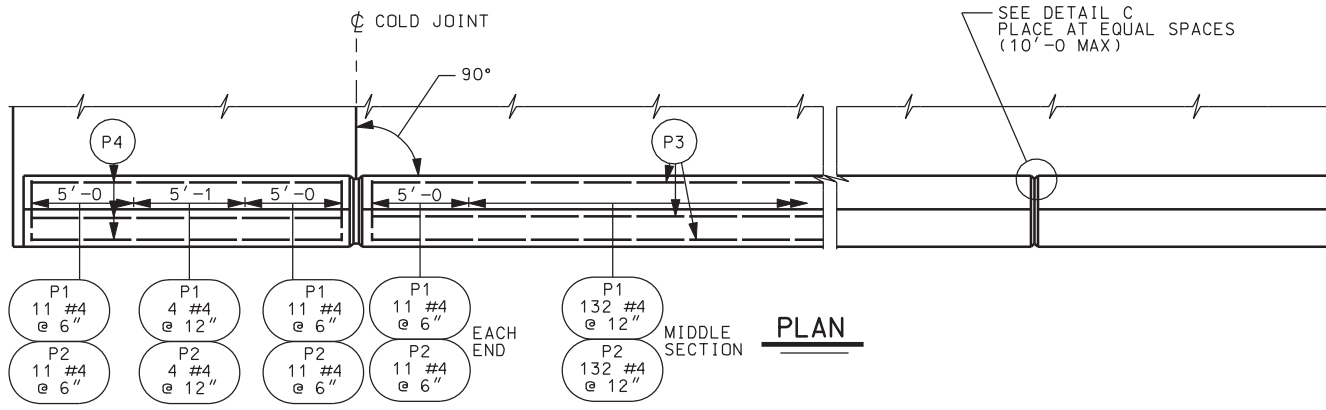


PLAN

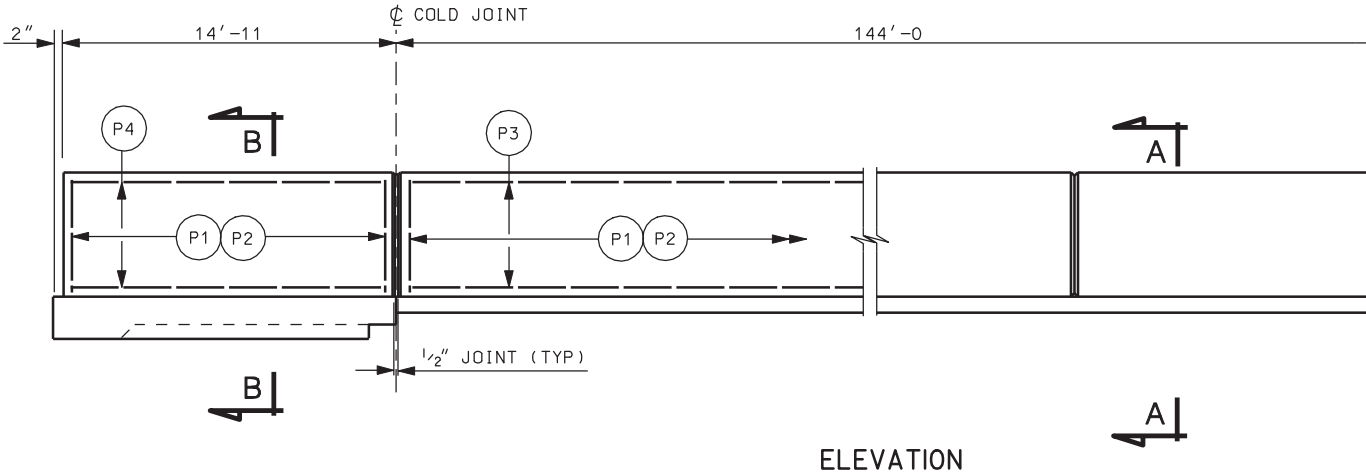


ELEVATION

ALL DIMENSIONS SHOWN ARE ALONG EDGE OF DECK

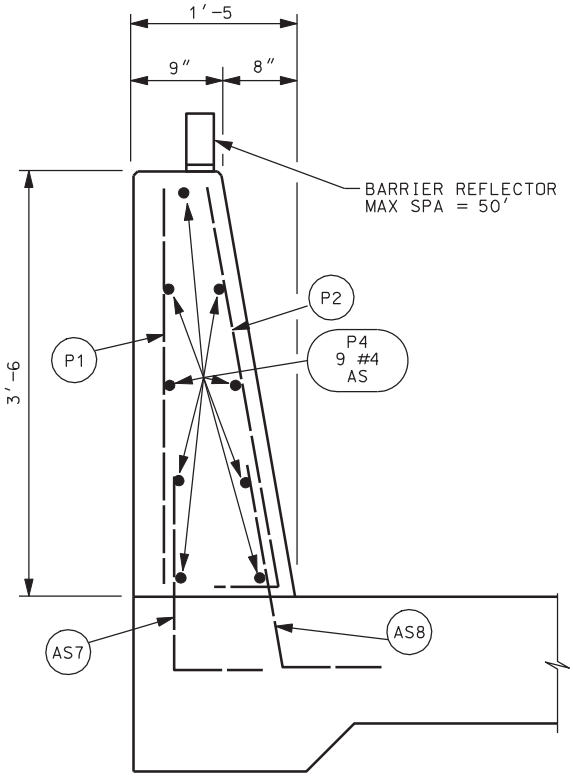


SECTION B-B

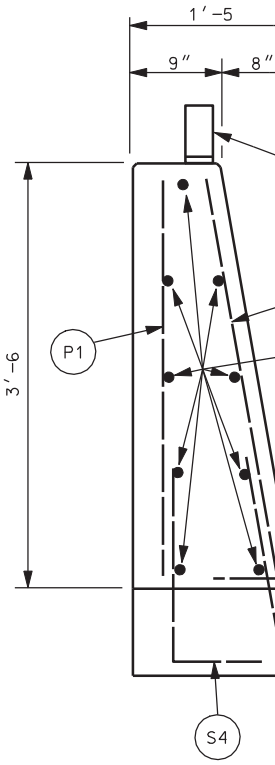


SECTION

DGN File: IP_PWPcdms1717\4433_F13_22.dgn

02-MAY-2005

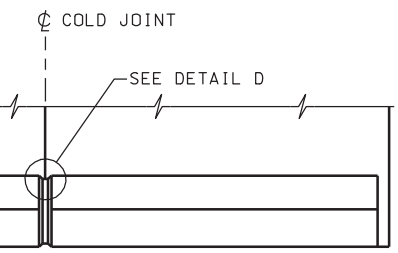


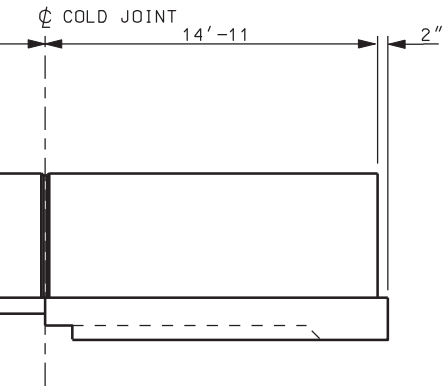


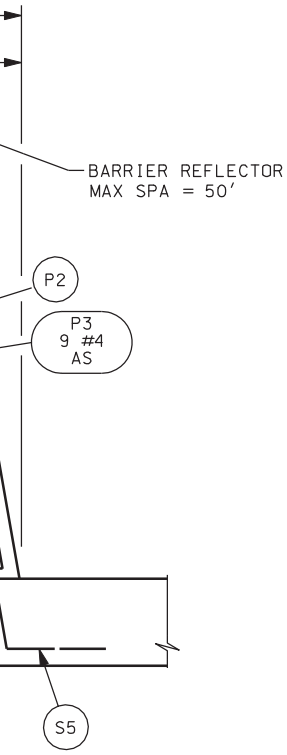


A-A

## NOTES

1. PROVIDE 2″ MIN COVER TO REINFORCING STEEL UNLESS NOTED OTHERWISE.
2. PLACE CONTRACTION JOINT ON SIDES AND TOP OF PARAPET.
3. EXTEND SEALANT AND FOAM BACKER ROD FROM DECK TO TOP OF PARAPET ON THE INSIDE PARAPET FACE AND ACROSS TOP OF PARAPET.

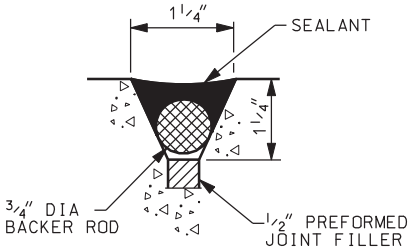


DETAIL D

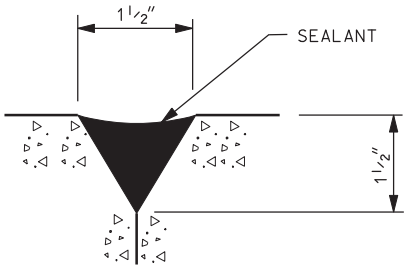


DETAIL C

## CONCRETE QUANTITIES

| | |
|---|---|
| PARAPET NB & SB | 48.9 CU YDS |

| NO. | DATE | BY | REMARKS |
|---|---|---|---|
| | | | |

REVISIONS

UTAH DEPARTMENT OF TRANSPORTATION
SALT LAKE CITY, UTAH
STRUCTURES DIVISION

URS

DESIGN PH 12/04 CHECK GTD 12/04
DRAWN DKH 12/04 CHECK PH 12/04
QUANT. CDT 12/04 CHECK CEL 12/04

APPROVAL RECOMM. DATE SENIOR DESIGN ENGR.
APPROVED FOR USE BY UDOT DATE UDOT BRIDGE ENGR.

I-15; CORRIDOR IN UTAH COUNTY
800 NORTH OVERPASS IN OREM
PARAPET DETAILS
PROJECT NUMBER SP-15-6(52)241

UTAH
COUNTY

F-13W
DRG. NO.

SHT. 22 OF 26

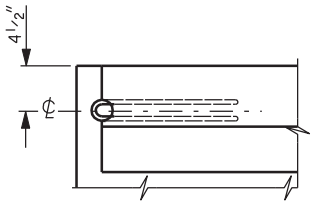


PLAN

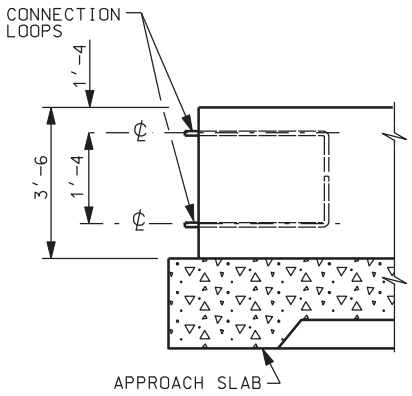


ELEVATION

STANDARD END DETAILS

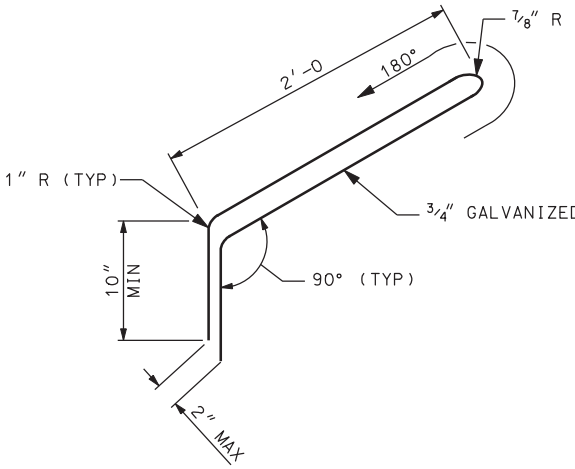


CONNECTION LOOP DETAIL

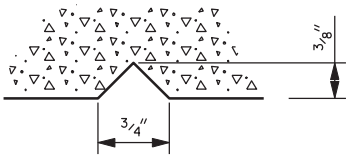


TYPICAL SECTION

THRU STRUCTURE NUMBER

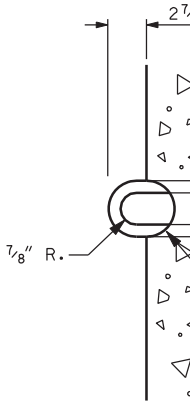


CON

DGN File:IP_PWPcdms1717\4433_F13_23.dgn
02-MAY-2005

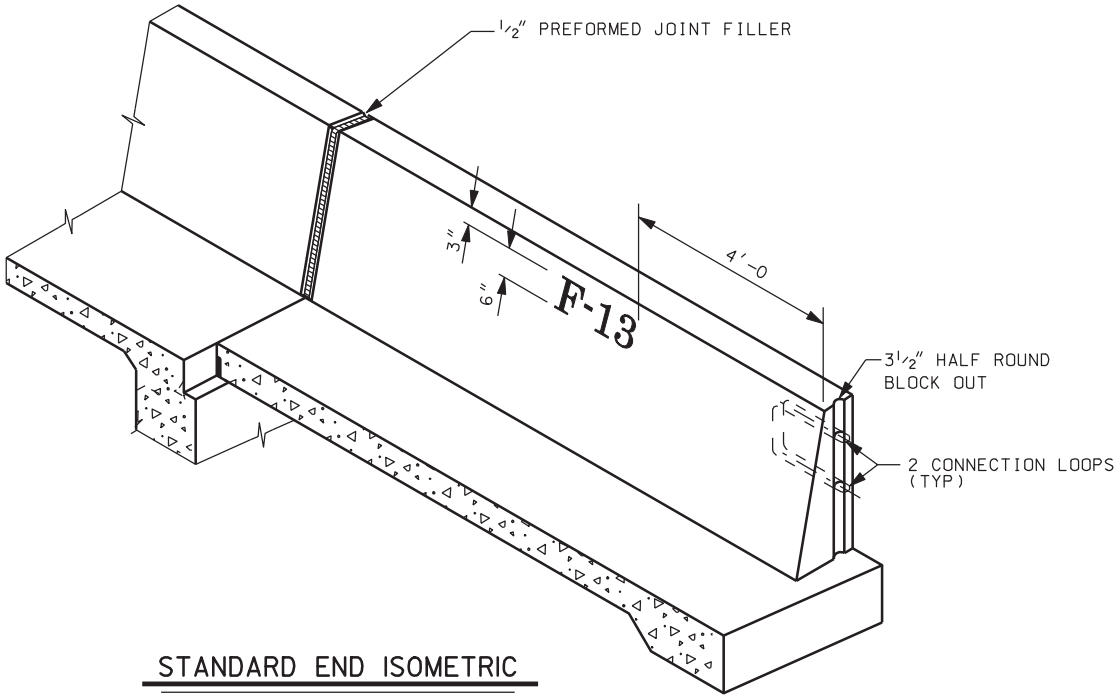


STANDARD END ISOMETRIC

D STEEL BAR

8"

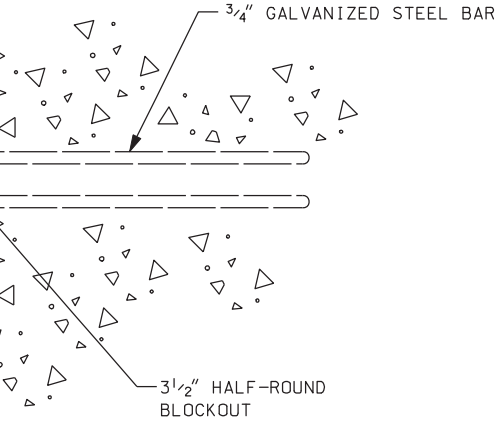


NECTION BAR END DETAIL

## NOTES

1. INSTALL BOTH CONNECTION LOOPS AND THREADED ANCHORS AT ALL PARAPET ENDS.
2. CONNECTION LOOPS NOT INCLUDED IN REINFORCING STEEL SCHEDULE.
3. LOCATE DRAWING NUMBER ON RIGHT-HAND SIDE OF APPROACH PARAPET.
4. SEE ROADWAY DETAILS SHEET DT-08 FOR CONNECTION DETAILS OF APPROACH SLAB PARAPET TO ROADWAY BARRIER.

| NO. | DATE | BY | REMARKS |
|---|---|---|---|

REVISIONS

UTAH DEPARTMENT OF TRANSPORTATION
SALT LAKE CITY, UTAH
STRUCTURES DIVISION

URS

DESIGN PH 12/04 CHECK GTD 12/04
DRAWN DKH 12/04 CHECK PH 12/04
QUANT. CDT 12/04 CHECK CEL 12/04

APPROVAL RECOMM. DATE SENIOR DESIGN ENGR.
APPROVED FOR USE BY UDOT DATE UDOT BRIDGE ENGR.

I-15; CORRIDOR IN UTAH COUNTY
800 NORTH OVERPASS IN OREM
PARAPET END DETAILS
PROJECT NUMBER SP-15-6(52)241

UTAH
COUNTY

F-13W
DRG. NO.

SHT. 23 OF 26

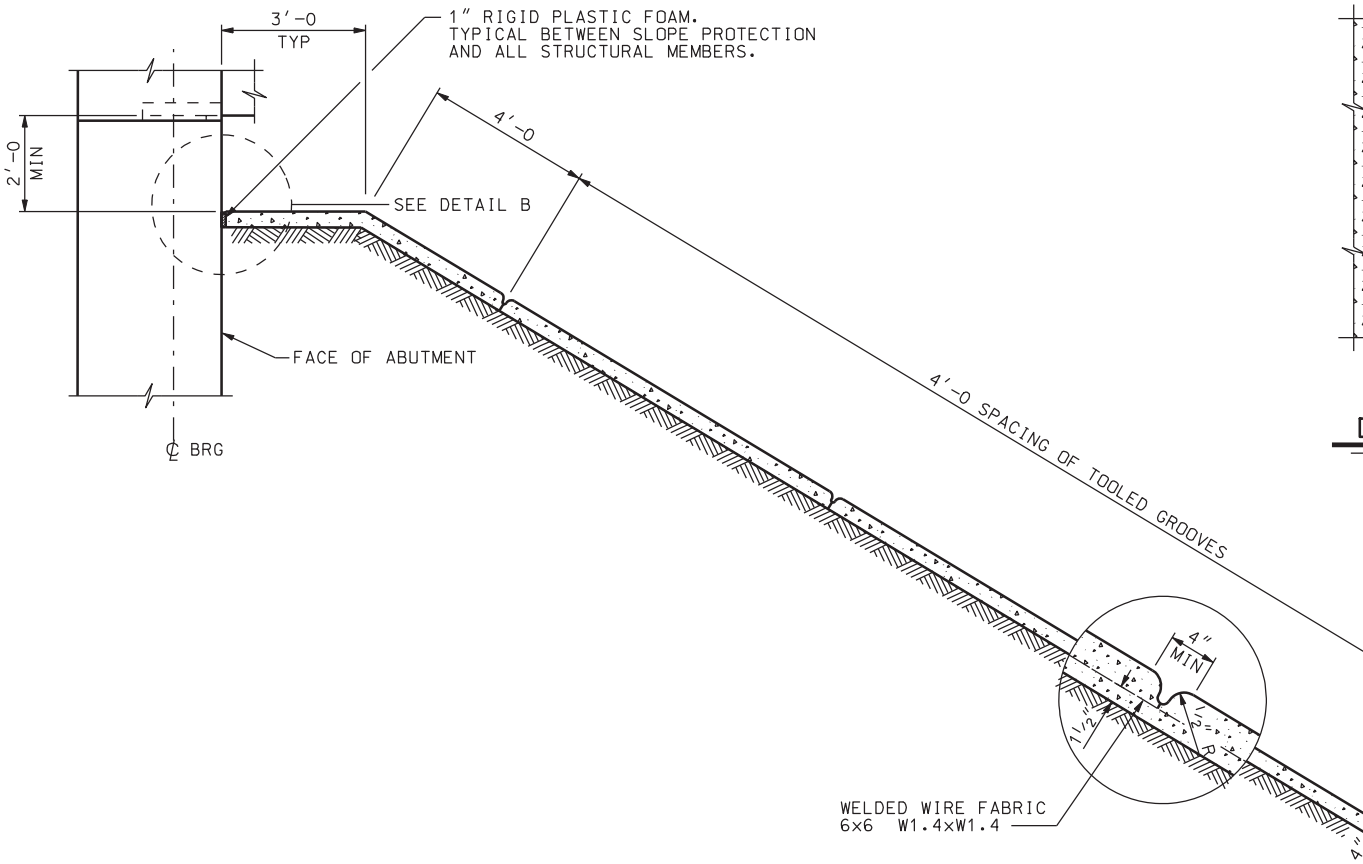


SEE DE

## SLOPE PROTECTION ELEVATION

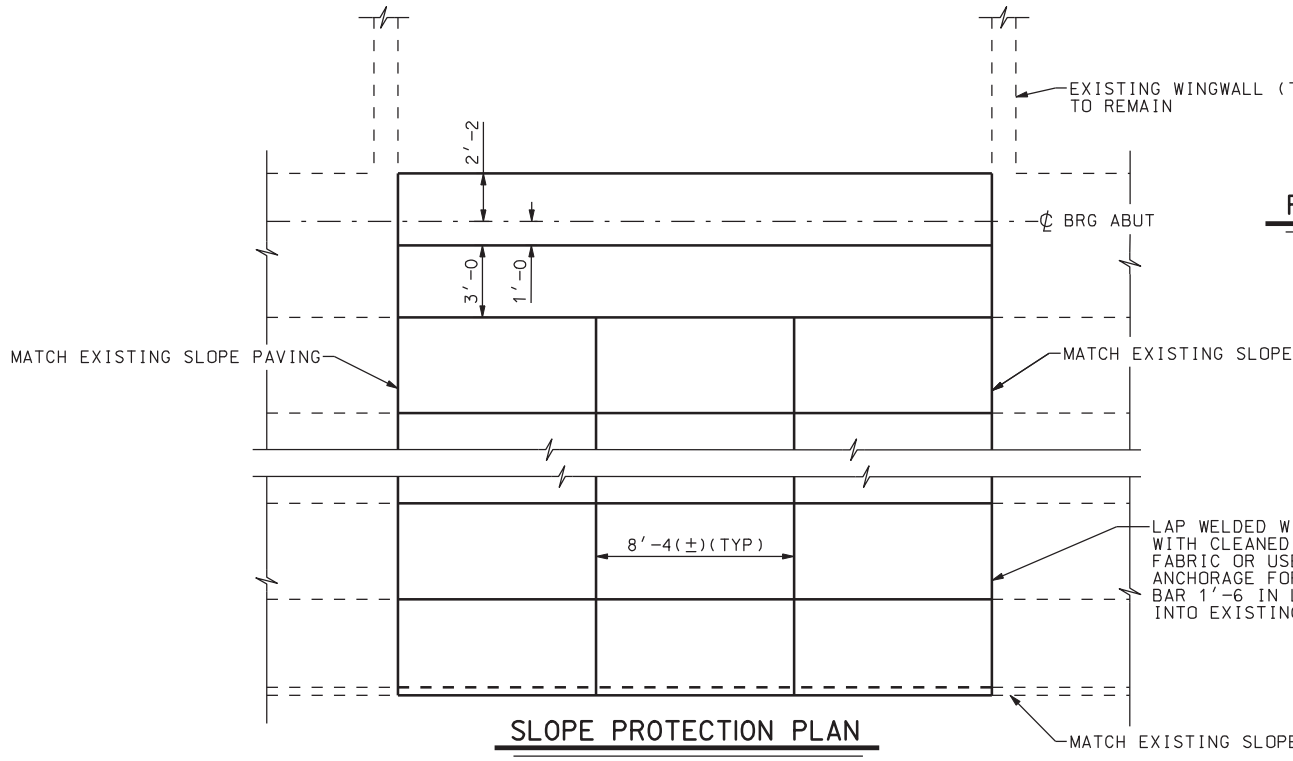


## SLOPE PROTECTION PLAN

DGN File: IP_PWPsdms1717\4433_F13_24.dgn

02-MAY-2005

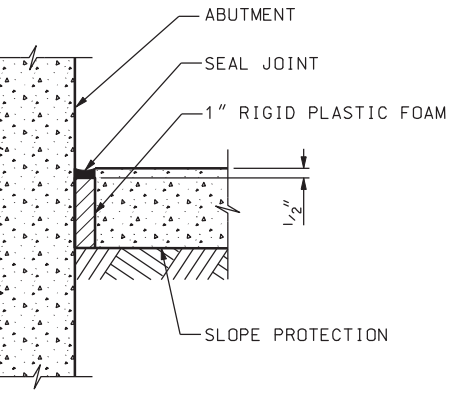


DETAIL B

## NOTES

1. QUANTITIES GIVEN FOR CONCRETE SLOPE PROTECTION ARE ESTIMATES ONLY AND ARE BASED ON THE EXPOSED FINISHED CONCRETE SURFACE AREA.
2. LOCATION OF THE TOE OF SLOPE IS APPROXIMATE ONLY AND SHALL BE MODIFIED TO MEET FIELD CONDITIONS AS DIRECTED BY THE ENGINEER.
3. JUST PRIOR TO FINAL INSPECTION, SEAL JOINTS BETWEEN THE CONCRETE SLOPE PROTECTION AND ALL STRUCTURAL MEMBERS.
4. USE CLASS A (AE) FOR ALL SLOPE PROTECTION.
5. CUT-OFF WALL (1'-6 x 4" THICK) IS CONTINUOUS AROUND PERIMETER OF SLOPE PROTECTION EXCEPT AT THE ABUTMENT FOOTING. PAYMENT FOR CUT-OFF WALLS SHALL BE INCLUDED IN THE CONTRACT PRICE PER SQUARE YARD FOR CONCRETE SLOPE PROTECTION.
6. MATCH EXISTING CONCRETE SLOPE PAVING. SEE EXISTING BRIDGE PLANS F-13W FOR MORE DETAILS.
7. REMOVAL OF EXISTING CONCRETE SLOPE PROTECTION FOR SUBSTRUCTURE CONSTRUCTION IS INCIDENTAL TO THE COST OF CONCRETE SLOPE PAVING.

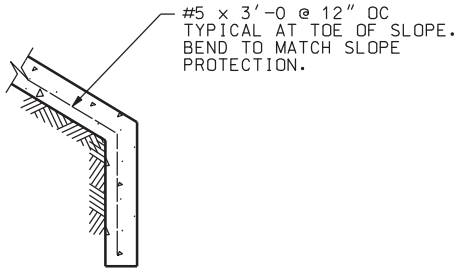


DETAIL A

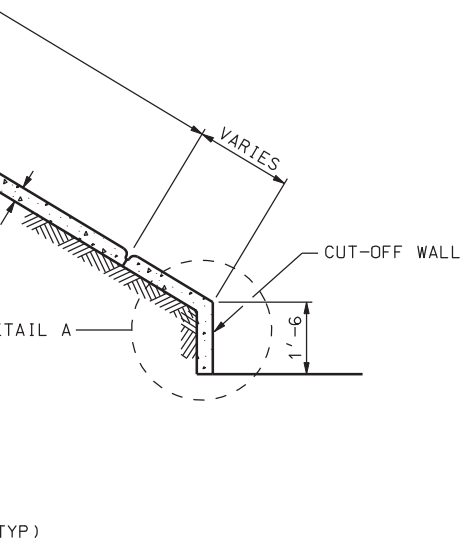


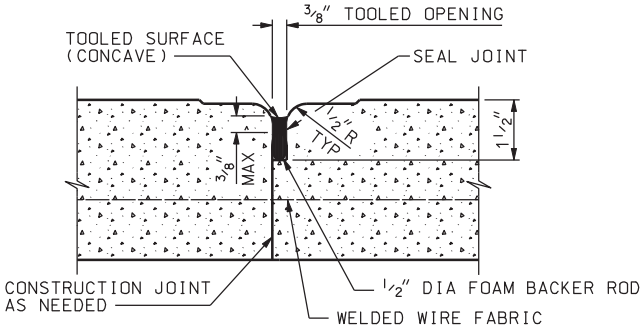


VERTICAL JOINT DETAIL

REPLACE CONCRETE SLOPE PROTECTION QUANTITIES

| | |
|---|---|
| CONCRETE ABUT #1 AND ABUT #4 | 225.0 SQ YDS |

PAVING

IRE FABRIC 1'-2 MIN
EXISTING WELDED WIRE
E AN APPROVED EPOXY
R A #3 REINFORCING STEEL
LENGTH AT 18", DEVELOP BAR 4" MIN
G CONCRETE SLOPE PROTECTION (TYP).

E PAVING

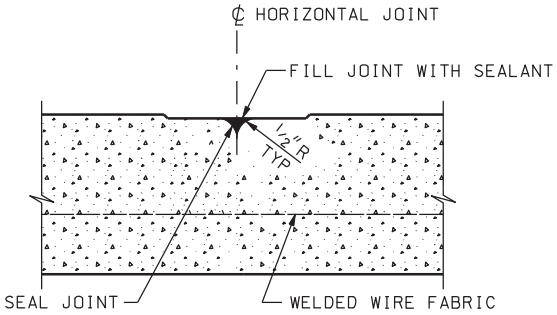


HORIZONTAL JOINT DETAIL

| NO. | DATE | BY | REMARKS |
|---|---|---|---|
| | | | |

REVISIONS

UTAH DEPARTMENT OF TRANSPORTATION
SALT LAKE CITY, UTAH
STRUCTURES DIVISION

URS

DESIGN PH 12/04 CHECK GTD 12/04
DRAWN DKH 12/04 CHECK PH 12/04
QUANT. CDT 12/04 CHECK CEL 12/04

APPROVAL RECOMM. DATE SENIOR DESIGN ENGR.
APPROVED FOR USE BY UDOT DATE UDOT BRIDGE ENGR.

I-15; CORRIDOR IN UTAH COUNTY
800 NORTH OVERPASS IN OREM
CONCRETE SLOPE PROTECTION
PROJECT NUMBER SP-15-6(52)241

UTAH
COUNTY

F-13W
DRG. NO.

SHT. 24 OF 26

| MARK | LOCATION | SIZE | NO. | LENGTH | TOTAL LENGTH | BAR TYPE |
|---|---|---|---|---|---|---|
| A1 | ABUTMENT | 7 | 48 | 9′-6 | 456′-0 | 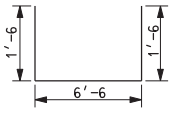  |
| A2 | ABUTMENT | 7 | 32 | 10′-0 | 320′-0 | |
| A3 | ABUTMENT | 5 | 48 | 10′-0 | 480′-0 | |
| A4 | ABUTMENT | 5 | 48 | 9′-6 | 456′-0 | 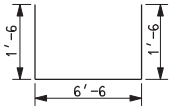  |
| A5 | ABUTMENT | 7 | 48 | 8′-5 | 404′-0 | 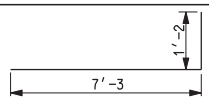  |
| A6 | ABUTMENT | 5 | 48 | 7′-3 | 348′-0 | |
| A7 | ABUTMENT | 7 | 56 | 12′-2 | 681′-4 | |
| A8 | ABUTMENT | 5 | 48 | 6′-4 | 304′-0 | |
| A9 | ABUTMENT | 5 | 56 | 4′-6 | 252′-0 | 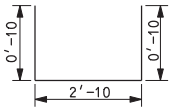  |
| A10 | ABUTMENT | 5 | 72 | 12′-3 | 882′-0 | |
| A11 | ABUTMENT | 5 | 72 | 4′-3 | 306′-0 | |
| A12 | ABUTMENT | 5 | 32 | 4′-3 | 136′-0 | |
| A13 | ABUTMENT | 7 | 32 | 4′-7 | 146′-8 | |
| A14 | ABUTMENT | 5 | 16 | 4′-3 | 68′-0 | |
| A15 | ABUTMENT | 5 | 32 | 3′-8 | 117′-4 | 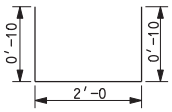  |
| A16 | ABUTMENT | 5 | 8 | 8′-9 | 70′-0 | |
| AD1 | ABUT DIAPHR. | 5 | 48 | 9′-11 | 476′-0 | HOOK DIAMETER $\phi$ = 0′-2 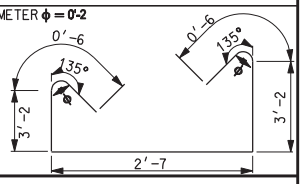  |
| AD2 | ABUT DIAPHR. | 5 | 80 | 4′-1 | 326′-8 | |
| AD3 | ABUT DIAPHR. | 5 | 24 | 14′-7 | 350′-0 | |
| AD4 | ABUT DIAPHR. | 5 | 48 | 4′-3 | 204′-0 | 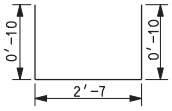  |
| AD5 | ABUT DIAPHR. | 5 | 320 | 2′-2 | 693′-4 | |
| AD6 | ABUT DIAPHR. | 5 | 16 | 5′-3 | 84′-0 | 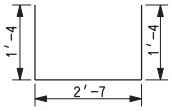  |
| | | | | | | A B |
| AD7 | ABUT DIAPHR. | 5 | 48 | 3′-0 | 144′-0 | 2′-0 1′-0 |
| AD8 | ABUT DIAPHR. | 5 | 160 | 3′-6 | 560′-0 | 2′-6 1′-0 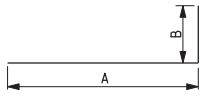  |
| AD9 | ABUT DIAPHR. | 4 | 160 | 1′-6 | 240′-0 | |
| B1 | BENT CAP | 9 | 16 | 17′-2 | 274′-8 | 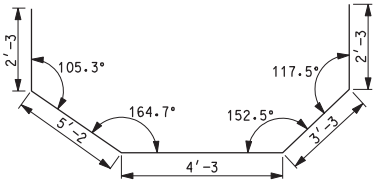  |
| B2 | BENT CAP | 6 | 32 | 12′-2 | 389′-4 | |

| MARK | LOCATION | SIZE | NO. | LENGTH | TOTAL LENGTH |
|---|---|---|---|---|---|
| B3 | BENT CAP | 9 | 32 | 16′-6 | 528′ |
| B4 | BENT CAP | 6 | 8 | 8′-8 | 69′ |
| B5 | BENT CAP | 5 | 44 | 11′-6 | 506′ |
| B6 | BENT CAP | 5 | 4 | 11′-2 | 44′ |
| B7 | BENT CAP | 5 | 4 | 10′-8 | 42′ |
| B8 | BENT CAP | 5 | 4 | 10′-4 | 41′ |
| B9 | BENT CAP | 5 | 4 | 9′-10 | 39′ |
| B10 | BENT CAP | 5 | 4 | 9′-4 | 37′ |
| B11 | BENT CAP | 5 | 4 | 9′-0 | 36′ |
| B12 | BENT CAP | 5 | 4 | 8′-6 | 34′ |
| B13 | BENT CAP | 5 | 4 | 11′-2 | 44′ |
| B14 | BENT CAP | 5 | 4 | 11′-0 | 44′ |
| B15 | BENT CAP | 5 | 4 | 10′-8 | 42′ |
| B16 | BENT CAP | 5 | 4 | 10′-6 | 42′ |
| B17 | BENT CAP | 5 | 4 | 10′-2 | 40′ |
| B18 | BENT CAP | 5 | 4 | 10′-0 | 40′ |
| B19 | BENT CAP | 5 | 4 | 9′-8 | 38′ |
| B20 | BENT CAP | 5 | 4 | 9′-6 | 38′ |
| B21 | BENT CAP | 5 | 4 | 9′-2 | 36′ |
| B22 | BENT CAP | 5 | 4 | 9′-0 | 36′ |
| B23 | BENT CAP | 5 | 4 | 8′-8 | 34′ |
| B24 | BENT CAP | 5 | 4 | 8′-6 | 34′ |
| B25 | BENT CAP | 9 | 16 | 3′-4 | 53′ |
| B26 | BENT CAP | 5 | 52 | 2′-6 | 130′ |
| B27 | BENT CAP | 5 | 88 | 4′-8 | 410′ |
| B28 | BENT CAP | 5 | 8 | 4′-6 | 36′ |
| B29 | BENT CAP | 5 | 8 | 4′-3 | 34′ |
| B30 | BENT CAP | 5 | 8 | 4′-1 | 32′ |
| B31 | BENT CAP | 5 | 8 | 3′-10 | 30′ |
| B32 | BENT CAP | 5 | 8 | 3′-7 | 28′ |
| B33 | BENT CAP | 5 | 8 | 3′-5 | 27′ |
| B34 | BENT CAP | 5 | 8 | 3′-2 | 25′ |
| B35 | BENT CAP | 5 | 8 | 4′-6 | 36′ |
| B36 | BENT CAP | 5 | 8 | 4′-5 | 35′ |
| B37 | BENT CAP | 5 | 8 | 4′-3 | 34′ |
| B38 | BENT CAP | 5 | 8 | 4′-2 | 33′ |
| B39 | BENT CAP | 5 | 8 | 4′-0 | 32′ |
| B40 | BENT CAP | 5 | 8 | 3′-11 | 31′ |
| B41 | BENT CAP | 5 | 8 | 3′-9 | 30′ |
| B42 | BENT CAP | 5 | 8 | 3′-8 | 29′ |
| B43 | BENT CAP | 5 | 8 | 3′-6 | 28′ |
| B44 | BENT CAP | 5 | 8 | 3′-5 | 27′ |
| B45 | BENT CAP | 5 | 8 | 3′-3 | 26′ |
| B46 | BENT CAP | 5 | 8 | 3′-2 | 25′ |
| B47 | BENT CAP | 6 | 8 | 11′-1 | 88′ |
| B48 | BENT CAP | 6 | 8 | 6′-1 | 48′ |
| B49 | BENT CAP | 5 | 120 | 4′-2 | 500′ |

DGN File: IP_PWPdms1717\4433_F13_25.dgn
02-MAY-2005

| L TH | BAR TYPE |
|---|---|
| -0 | 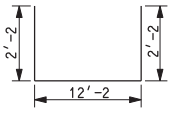 |



| -4 | | | | | | | | |
|---|---|---|---|---|---|---|---|---|
| | A | B | C | D | E | F | G | H |
| -0 | 3'-2 | 3'-8 | 3'-8 | 0'-6 | 0'-6 | 135 | 135 | 0'-2 |
| -8 | 3'-2 | 3'-6 | 3'-6 | 0'-6 | 0'-6 | 135 | 135 | 0'-2 |
| -8 | 3'-2 | 3'-3 | 3'-3 | 0'-6 | 0'-6 | 135 | 135 | 0'-2 |
| -4 | 3'-2 | 3'-1 | 3'-1 | 0'-6 | 0'-6 | 135 | 135 | 0'-2 |
| -4 | 3'-2 | 2'-10 | 2'-10 | 0'-6 | 0'-6 | 135 | 135 | 0'-2 |
| -4 | 3'-2 | 2'-7 | 2'-7 | 0'-6 | 0'-6 | 135 | 135 | 0'-2 |
| -0 | 3'-2 | 2'-5 | 2'-5 | 0'-6 | 0'-6 | 135 | 135 | 0'-2 |
| -0 | 3'-2 | 2'-2 | 2'-2 | 0'-6 | 0'-6 | 135 | 135 | 0'-2 |
| -8 | 3'-2 | 3'-6 | 3'-6 | 0'-6 | 0'-6 | 135 | 135 | 0'-2 |
| -0 | 3'-2 | 3'-5 | 3'-5 | 0'-6 | 0'-6 | 135 | 135 | 0'-2 |
| -8 | 3'-2 | 3'-3 | 3'-3 | 0'-6 | 0'-6 | 135 | 135 | 0'-2 |
| -0 | 3'-2 | 3'-2 | 3'-2 | 0'-6 | 0'-6 | 135 | 135 | 0'-2 |
| -8 | 3'-2 | 3'-0 | 3'-0 | 0'-6 | 0'-6 | 135 | 135 | 0'-2 |
| -0 | 3'-2 | 2'-11 | 2'-11 | 0'-6 | 0'-6 | 135 | 135 | 0'-2 |
| -8 | 3'-2 | 2'-9 | 2'-9 | 0'-6 | 0'-6 | 135 | 135 | 0'-2 |
| -0 | 3'-2 | 2'-8 | 2'-8 | 0'-6 | 0'-6 | 135 | 135 | 0'-2 |
| -8 | 3'-2 | 2'-6 | 2'-6 | 0'-6 | 0'-6 | 135 | 135 | 0'-2 |
| -0 | 3'-2 | 2'-5 | 2'-5 | 0'-6 | 0'-6 | 135 | 135 | 0'-2 |
| -8 | 3'-2 | 2'-3 | 2'-3 | 0'-6 | 0'-6 | 135 | 135 | 0'-2 |
| -0 | 3'-2 | 2'-2 | 2'-2 | 0'-6 | 0'-6 | 135 | 135 | 0'-2 |

HOOK DIAMETER $\phi$ = H

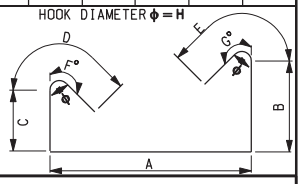



| -4 | | | | | |
|---|---|---|---|---|---|
| -0 | | | | | |
| | A | B | C | D | E |
| -8 | 3'-8 | 0'-6 | 0'-6 | 135 | 0'-2 |
| -0 | 3'-6 | 0'-6 | 0'-6 | 135 | 0'-2 |
| -0 | 3'-3 | 0'-6 | 0'-6 | 135 | 0'-2 |
| -8 | 3'-1 | 0'-6 | 0'-6 | 135 | 0'-2 |
| -8 | 2'-10 | 0'-6 | 0'-6 | 135 | 0'-2 |
| -8 | 2'-7 | 0'-6 | 0'-6 | 135 | 0'-2 |
| -4 | 2'-5 | 0'-6 | 0'-6 | 135 | 0'-2 |
| -4 | 2'-2 | 0'-6 | 0'-6 | 135 | 0'-2 |
| -0 | 3'-6 | 0'-6 | 0'-6 | 135 | 0'-2 |
| -4 | 3'-5 | 0'-6 | 0'-6 | 135 | 0'-2 |
| -0 | 3'-3 | 0'-6 | 0'-6 | 135 | 0'-2 |
| -4 | 3'-2 | 0'-6 | 0'-6 | 135 | 0'-2 |
| -0 | 3'-0 | 0'-6 | 0'-6 | 135 | 0'-2 |
| -4 | 2'-11 | 0'-6 | 0'-6 | 135 | 0'-2 |
| -0 | 2'-9 | 0'-6 | 0'-6 | 135 | 0'-2 |
| -4 | 2'-8 | 0'-6 | 0'-6 | 135 | 0'-2 |
| -0 | 2'-6 | 0'-6 | 0'-6 | 135 | 0'-2 |
| -4 | 2'-5 | 0'-6 | 0'-6 | 135 | 0'-2 |
| -0 | 2'-3 | 0'-6 | 0'-6 | 135 | 0'-2 |
| -4 | 2'-2 | 0'-6 | 0'-6 | 135 | 0'-2 |

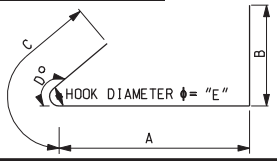



| -8 | |
|---|---|
| -8 | |
| -0 | 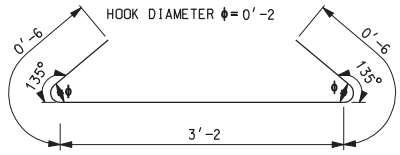 |



| MARK | LOCATION | SIZE | NO. | LENGTH | TOTAL LENGTH | BAR TYPE |
|---|---|---|---|---|---|---|
| D1 | BENT DIAPHR. | 5 | 48 | 12'-2 | 584'-0 | 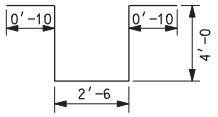 |
| D2 | BENT DIAPHR. | 5 | 112 | 3'-2 | 354'-8 | |
| D3 | BENT DIAPHR. | 5 | 8 | 12'-0 | 96'-0 | |
| D4 | BENT DIAPHR. | 5 | 48 | 4'-2 | 200'-0 | 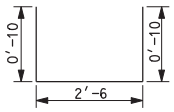 |
| D5 | BENT DIAPHR. | 5 | 800 | 2'-10 | 2,266'-8 | |
| D6 | BENT DIAPHR. | 5 | 160 | 2'-4 | 373'-4 | |
| D7 | BENT DIAPHR. | 5 | 160 | 4'-6 | 720'-0 | 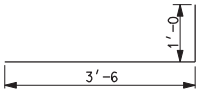 |
| D8 | BENT DIAPHR. | 5 | 160 | 1'-0 | 160'-0 | |
| D9 | BENT DIAPHR. | 5 | 16 | 4'-0 | 64'-0 | 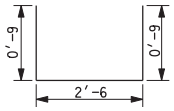 |
| D10 | BENT DIAPHR. | 5 | 40 | 2'-10 | 113'-4 | |



| | | | | | | A | B | C |
|---|---|---|---|---|---|---|---|---|
| F1 | BENT FOUND. | 8 | 112 | 12'-0 | 1,344'-0 | 7'-6 | 2'-3 | 2'-3 |
| F2 | BENT FOUND. | 10 | 40 | 15'-0 | 600'-0 | 10'-6 | 2'-3 | 2'-3 |
| F3 | BENT FOUND. | 8 | 56 | 15'-0 | 840'-0 | 10'-6 | 2'-3 | 2'-3 |

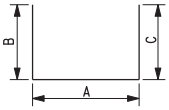



| F4 | BENT FOUND. | 5 | 320 | 3'-6 | 1,120'-0 |
|---|---|---|---|---|---|

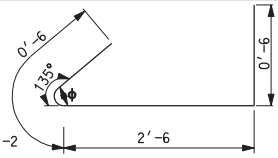



| | | | | | | A | B | C |
|---|---|---|---|---|---|---|---|---|
| C1 | BENT2 COLUMN | 11 | 4 | 28'-10 | 115'-4 | 2'-8 | 23'-6 | 2'-8 |
| C1 | BENT3 COLUMN | 11 | 4 | 28'-7 | 114'-4 | 2'-8 | 23'-3 | 2'-8 |

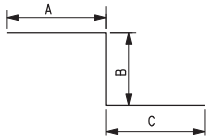



| | | | | | | A | B | C |
|---|---|---|---|---|---|---|---|---|
| C2 | BENT2 COLUMN | 11 | 8 | 28'-10 | 230'-8 | 2'-8 | 23'-6 | 2'-8 |
| C2 | BENT3 COLUMN | 11 | 8 | 28'-7 | 228'-8 | 2'-8 | 23'-3 | 2'-8 |

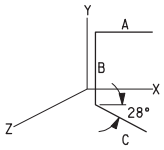



| C3 | BENT2 COLUMN | 11 | 4 | 28'-10 | 115'-4 |
|---|---|---|---|---|---|

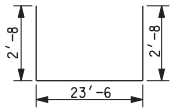



| C3 | BENT3 COLUMN | 11 | 4 | 28'-7 | 114'-4 |
|---|---|---|---|---|---|

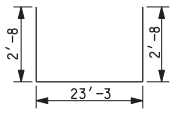



| | | | | | |
|---|---|---|---|---|---|
| C4 | BENT2 COLUMN | 4 | 8 | 23'-6 | 188'-0 |
| C4 | BENT3 COLUMN | 4 | 8 | 23'-3 | 186'-0 |

| NO. | DATE | BY | REMARKS |
|---|---|---|---|
| | | | |

REVISIONS

UTAH DEPARTMENT OF TRANSPORTATION
SALT LAKE CITY, UTAH
STRUCTURES DIVISION

URS

| | | |
|---|---|---|
| DESIGN PH 12/04 | CHECK GTD 12/04 | CHECK PH 12/04 |
| DRAWN DKH 12/04 | QUANT. CDT 12/04 | CHECK CEL 12/04 |

APPROVAL RECOMM. DATE SENIOR DESIGN ENGR.

APPROVED FOR USE BY UDOT DATE UDOT BRIDGE ENGR.

I-15; CORRIDOR IN UTAH COUNTY
800 NORTH OVERPASS IN OREM
REINFORCING SCHEDULE 1

PROJECT NUMBER SP-15-6(52)241

UTAH
COUNTY

F-13W
DRG. NO.

SHT. 25 OF 26

| MARK | LOCATION | SIZE | NO. | LENGTH | TOTAL LENGTH | BAR TYPE |
|---|---|---|---|---|---|---|
| C5 | BENT2 COLUMN | 5 | 2 | 597′-0 | 1,194′-0 | |
| C5 | BENT3 COLUMN | 5 | 2 | 590′-11 | 1,181′-10 | |
| C6 | BENT COLUMN | 4 | 144 | 8′-0 | 1,152′-0 | |
| | | | | | | A B C |
| C7 | BENT 2 COLUMN | 11 | 8 | 28′-10 | 230′-8 | 2′-8 23′-6 2′-8 |
| C7 | BENT 3 COLUMN | 11 | 8 | 28′-7 | 228′-8 | 2′-8 23′-3 2′-8 |
| ID1 | INT. DIAPH. | 4 | 80 | 6′-8 | 533′-4 | |
| ID2 | INT. DIAPH. | 4 | 40 | 3′-2 | 126′-8 | |
| ID3 | INT. DIAPH. | 6 | 40 | 5′-2 | 206′-8 | |
| ID4 | INT. DIAPH. | 6 | 20 | 11′-5 | 228′-4 | |
| ID5 | INT. DIAPH. | 6 | 40 | 2′-6 | 100′-0 | |
| S1 | DECK | 5 | 582 | 14′-9 | 8,584′-6 | |
| S2 | DECK | 5 | 32 | 151′-9 | 4,856′-0 | |
| S3 | DECK | 6 | 34 | 153′-3 | 5,210′-6 | |
| S4 | DECK | 4 | 308 | 3′-7 | 1,103′-8 | |
| S5 | DECK | 4 | 308 | 4′-2 | 1,283′-4 | |
| S6 | DECK | 6 | 56 | 60′-0 | 3,360′-0 | |
| S7 | DECK | 5 | 60 | 3′-0 | 180′-0 | |
| S8 | DECK | 5 | 286 | 6′-0 | 1,716′-0 | |
| AS1 | AP. SLAB | 5 | 128 | 14′-10 | 1,898′-8 | |
| AS2 | AP. SLAB | 5 | 64 | 14′-9 | 944′-0 | |
| AS3 | AP. SLAB | 7 | 64 | 14′-9 | 944′-0 | |

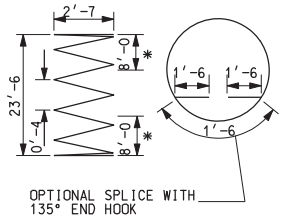


* LAP SPLICE NOT PERMITTED

1½ TURNS TYP. TOP AND BOTTOM

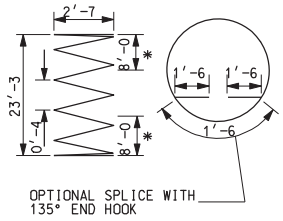


* LAP SPLICE NOT PERMITTED

1½ TURNS TYP. TOP AND BOTTOM

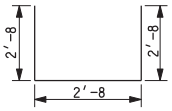


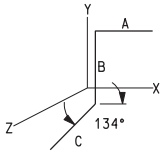


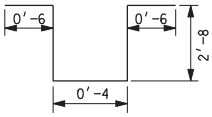


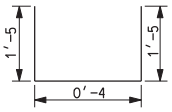


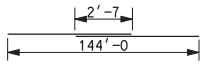


3 SPLICE(S) REQ'D

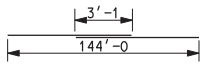


3 SPLICE(S) REQ'D

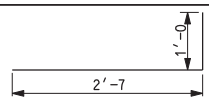


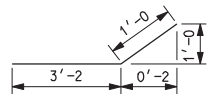


| MARK | LOCATION | SIZE | NO. | LENGTH | TOTA LENG |
|---|---|---|---|---|---|
| AS4 | AP. SLAB | 6 | 12 | 14′-10 | 178′ |
| AS5 | AP. SLAB | 4 | 128 | 6′-2 | 789′ |
| AS6 | AP. SLAB | 7 | 12 | 14′-9 | 177′ |
| AS7 | AP. SLAB | 4 | 104 | 3′-7 | 372′ |
| AS8 | AP. SLAB | 4 | 104 | 4′-2 | 433′ |
| CB1 | CATCH BASIN | 5 | 12 | 9′-10 | 118′ |
| CB2 | CATCH BASIN | 5 | 4 | 13′-0 | 52′- |
| CB3 | CATCH BASIN | 5 | 4 | 2′-8 | 10′- |
| P1 | PARAPET | 4 | 412 | 3′-2 | 1,304 |
| P2 | PARAPET | 4 | 412 | 3′-10 | 1,579 |
| P3 | PARAPET | 4 | 18 | 151′-6 | 2,727′- |
| P4 | PARAPET | 4 | 36 | 14′-9 | 531′ |

| L TH | BAR TYPE |
|---|---|
| -0 | |
| -4 | 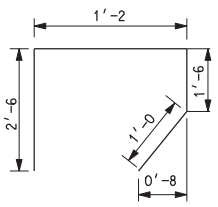 |
| -0 | |
| -8 | 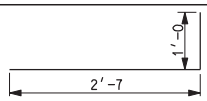 |
| -4 | 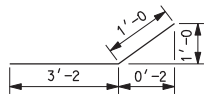 |
| -0 | 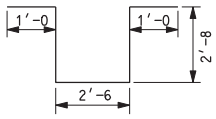 |
| -0 | 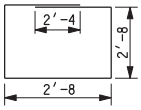 |
| -8 | |
| '-8 | |
| '-4 | 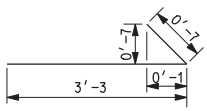 |
| -0 | 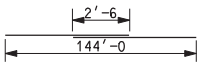 3 SPLICE(S) REQ'D |
| -0 | |



SUMMARY OF COATED BARS

| | | | | | | |
|---|---|---|---|---|---|---|
| 12,550'-4 | OF NUMBER | 4 | BARS AT | 0.668 | LBS/FT = | 8,383.6 LBS |
| 35,921'-7 | OF NUMBER | 5 | BARS AT | 1.043 | LBS/FT = | 37,466.2 LBS |
| 9,879'-6 | OF NUMBER | 6 | BARS AT | 1.502 | LBS/FT = | 14,839.0 LBS |
| 3,129'-0 | OF NUMBER | 7 | BARS AT | 2.044 | LBS/FT = | 6,395.7 LBS |
| 2,184'-0 | OF NUMBER | 8 | BARS AT | 2.670 | LBS/FT = | 5,831.3 LBS |
| 856'-0 | OF NUMBER | 9 | BARS AT | 3.400 | LBS/FT = | 2,910.4 LBS |
| 600'-0 | OF NUMBER | 10 | BARS AT | 4.303 | LBS/FT = | 2,581.8 LBS |
| 1,378'-0 | OF NUMBER | 11 | BARS AT | 5.313 | LBS/FT = | 7,321.3 LBS |
| | | | | | TOTAL | 85,729.3 LBS |

NOTES:

ALL BARS ARE COATED

BAR SIZES ARE U.S. UNITS.

REINFORCING STEEL DIMENSIONS ARE OUT TO OUT OF BAR UNLESS OTHERWISE SPECIFIED.

SPLICES MAY BE OMITTED AT FABRICATORS OPTION...HOWEVER, IN SUCH CASE, FABRICATOR ASSUMES RESPONSIBILITY FOR FIT.

| NO. | DATE | BY | REMARKS |
|---|---|---|---|
| | | | |

REVISIONS

UTAH DEPARTMENT OF TRANSPORTATION
SALT LAKE CITY, UTAH
STRUCTURES DIVISION

URS

DESIGN PH 12/04 CHECK GTD 12/04
DRAWN DKH 12/04 CHECK PH 12/04
QUANT. CDT 12/04 CHECK CEL 12/04

APPROVAL RECOMM. DATE SENIOR DESIGN ENGR.
APPROVED FOR USE BY UDOT DATE UDOT BRIDGE ENGR.

I-15; CORRIDOR IN UTAH COUNTY
800 NORTH OVERPASS IN OREM
REINFORCING SCHEDULE 2

PROJECT NUMBER SP-15-6(52)241

UTAH
COUNTY

F-13W
DRG. NO.

SHT. 26 OF 26

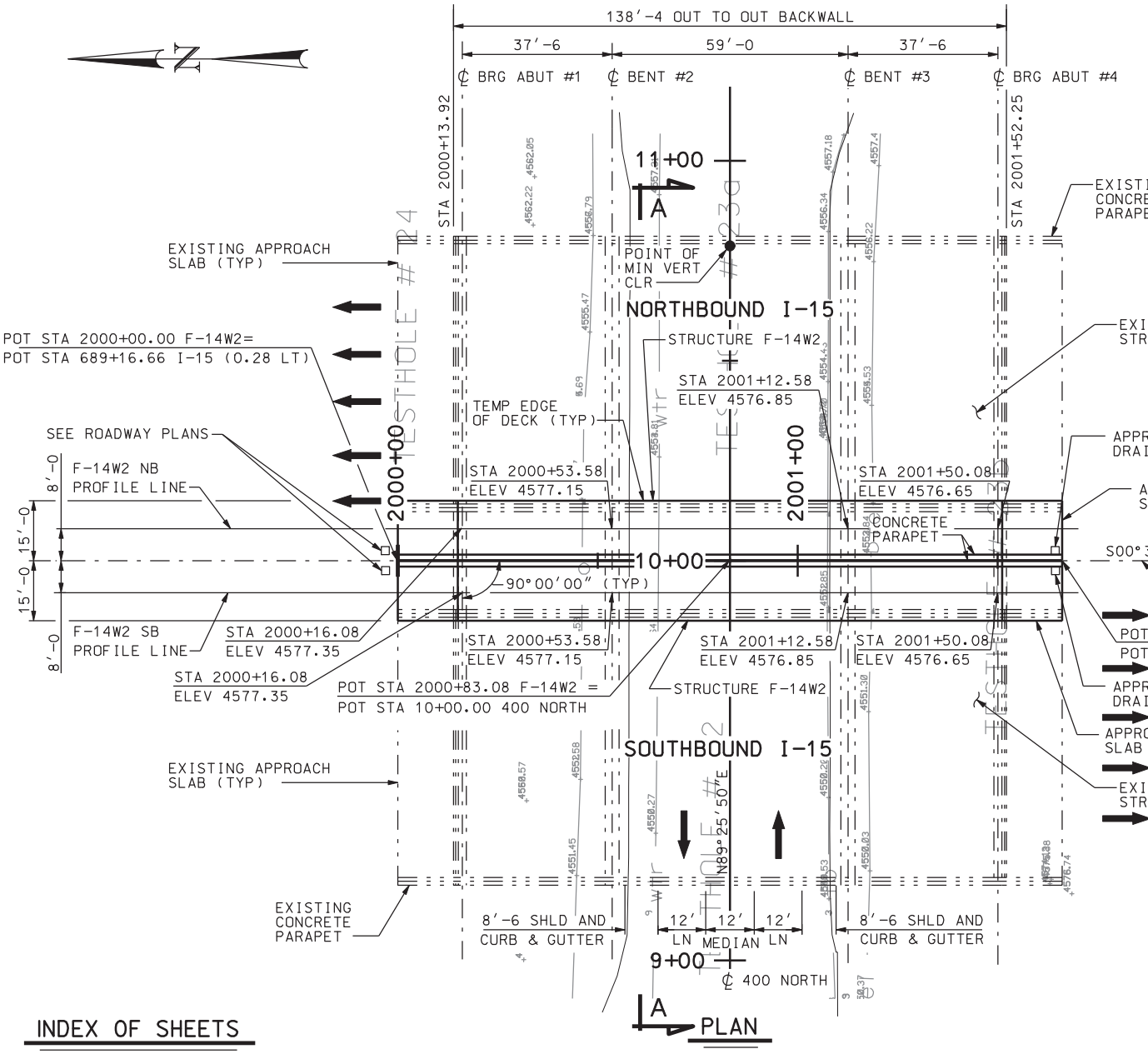


PLAN

## INDEX OF SHEETS


1. SITUATION & LAYOUT 1
2. SITUATION & LAYOUT 2
3. SOIL DATA SHEET
4. FOUNDATION PLAN
5. DRIVEN PILE DETAILS
6. ABUTMENT #1 PLAN & ELEVATION
7. ABUTMENT #4 PLAN & ELEVATION
8. ABUTMENT DETAILS
9. BENT PLAN & ELEVATION NB
10. BENT PLAN & ELEVATION SB
11. BENT DETAILS 1
12. BENT DETAILS 2
13. BENT DETAILS 3
14. FRAMING PLAN
15. GIRDER DETAILS-SPANS 1 & 3
16. GIRDER DETAILS-SPAN 2
17. DIAPHRAGM & BEARING DETAILS
18. DECK PLAN
19. DECK SECTIONS
20. APPROACH SLAB PLAN
21. APPROACH SLAB DETAILS
22. APPROACH SLAB DRAIN DETAILS
23. SCREED ELEVATIONS
24. PARAPET DETAILS
25. PARAPET END DETAILS
26. CONCRETE SLOPE PROTECTION
27. REINFORCING SCHEDULE 1
28. REINFORCING SCHEDULE 2


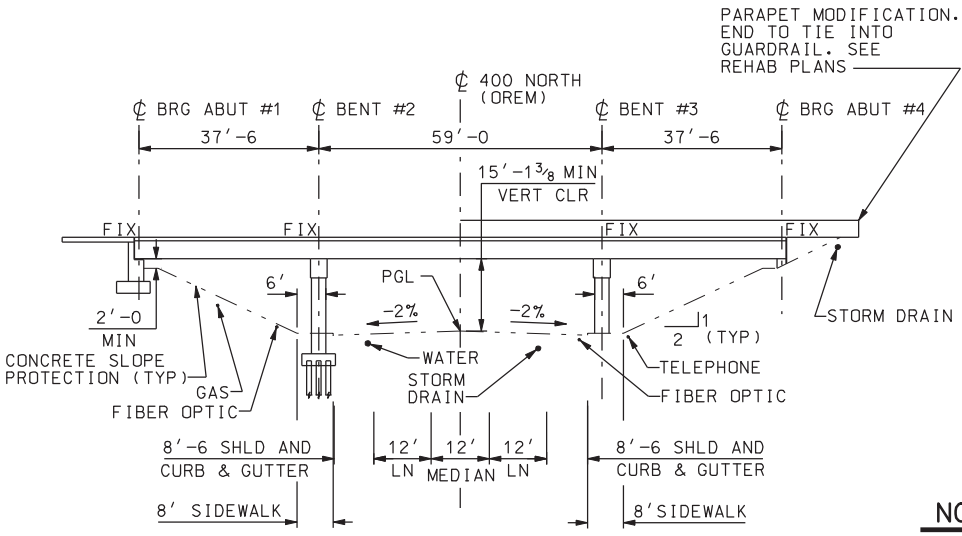


ELEVATION

NO

1. ALL BENTS AND ABU
   TO BEARING S89°25
2. ROADWAY INFORMATI
   IS BASED ON EXIST
   SECTION VARIES AN
3. ROADWAY CENTER LI
   STATION EQUATIONS

DGN File: IP_PWPcdns1717\4433_F14_01.dgn
02-MAY-2005

ING
ETE
ET

STING
UCTURE F-14W

ROACH SLAB
N

PPROACH
LAB (TYP)

34'10"E
℄ F-14W2

STA 2001+66.17 F-14W2=
STA 690+82.83 I-15 (0.08 LT)

ROACH SLAB
N

OACH
(TYP)

STING
UCTURE F-14W

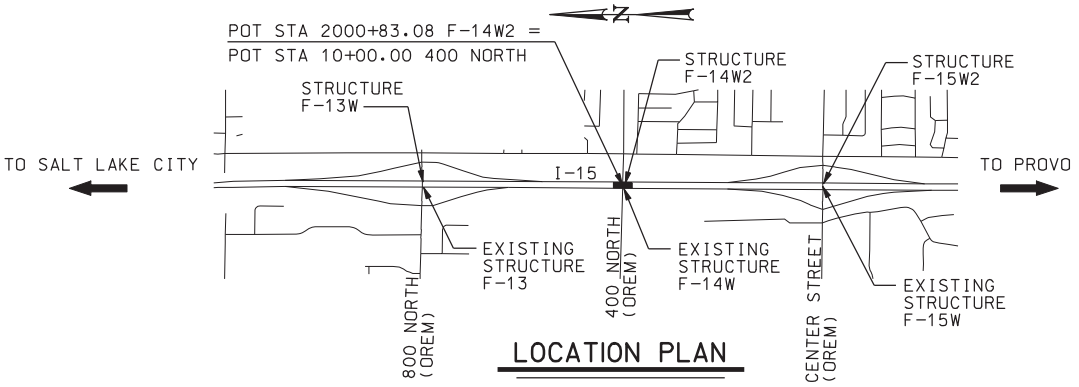


## LOCATION PLAN

## DESIGN DATA

HL-93 LOADING IN ACCORDANCE WITH AASHTO LRFD BRIDGE DESIGN SPECIFICATIONS, 3rd EDITION, 2004.
SEISMIC DESIGN PER NCHRP 12-49.

INVENTORY AND OPERATING RATINGS FOR HS20-44 ARE IN ACCORDANCE WITH THE AASHTO MANUAL FOR CONDITION ELEVATION OF BRIDGES, 2nd EDITION, AND THE 2001 AND 2003 INTERIM SPECIFICATIONS LOAD FACTOR METHOD. INVENTORY AND OPERATING RATINGS FOR HL-93 ARE IN ACCORDANCE WITH THE GUIDE MANUAL FOR CONDITION EVALUATION AND LOAD RESISTANCE FACTOR RATING (LRFR) OF HIGHWAY BRIDGES.

| | OPERATING RATING | | INVENTORY RATING | | |
|---|---|---|---|---|---|
| EXISTING GIRDERS | (HS-20) | 1.56 | (HS-20) | 0.93 | (SHEAR - SPANS 1 & 3) |
| | (HL-93) | 1.50 | (HL-93) | 1.16 | (SHEAR - SPANS 1 & 3) |
| NEW GIRDERS | (HL-93) | 1.51 | (HL-93) | 1.16 | (SHEAR - SPANS 1 & 3) |

CAST-IN-PLACE CONCRETE: f'c = 4000 psi; fy (REINF) = 60 ksi

PRESTRESSED CONCRETE: f'c = 6000 psi; fci = 4000 psi;

STRUCTURAL STEEL: fy = 36 ksi

WEARING SURFACE: 3" ASPHALT; 0 PSF (FUTURE)

DESIGN SPEED: I-15 = 70 MPH; 400 NORTH = 40 MPH

SEISMIC: SEISMIC DESIGN PARAMETERS (500 YR RETURN PERIOD, 10% PE IN 50 YR)
Ss = MAX. CONSIDERED EQ GROUND MOTION AT 0.2s = 0.4292g.
S1 = MAX. CONSIDERED EQ GROUND MOTION AT 1.0s = 0.1449g.
SITE CLASS D
EXISTING STRUCTURE ELEMENTS DO NOT MEET THE SEISMIC DESIGN CRITERIA

## GENERAL NOTES

1. USE COATED DEFORMED BILLET-STEEL BARS CONFORMING TO AASHTO M 284 OR M 111 AND M 31 GRADE 60 FOR ALL REINFORCING STEEL.
2. CONFORM ALL STRUCTURAL STEEL TO AASHTO M 270 GRADE 36, EXCEPT WHERE NOTED OTHERWISE.
3. CHAMFER ALL EXPOSED CONCRETE CORNERS 3/4" EXCEPT WHERE NOTED OTHERWISE.
4. PROVIDE 2" CONCRETE COVER TO REINFORCING STEEL EXCEPT WHERE NOTED OTHERWISE.
5. USE CLASS AA (AE) FOR CAST-IN-PLACE CONCRETE EXCEPT WHERE SPECIFIED OTHERWISE.
6. ALL NEW SUBSTRUCTURE ELEMENTS ARE DESIGNED TO MATCH LOCATION AND DIRECTION OF EXISTING ELEMENTS. FIELD VERIFY ALL CONTROLLING DIMENSIONS PRIOR TO CONSTRUCTION AND FABRICATION OF ANY MATERIALS. REPORT ANY DISCREPANCY BETWEEN THESE PLANS AND THE EXISTING STRUCTURE TO THE ENGINEER. DO NOT CONSTRUCT OR FABRICATE ANY ELEMENTS UNTIL THE DISCREPANCIES ARE RESOLVED. ALL STRUCTURE GEOMETRY IS BASED ON LOCAL SURVEY CONTROL POINTS SHOWN ON THE FOUNDATION PLAN. THE I-15 STATIONING AND ALIGNMENT IS FOR INFORMATION ONLY. ABUTMENT/BENT DIRECTIONS AND LOCATIONS USED IN DESIGN ARE LISTED.
7. SEE EXISTING STRUCTURE F-14 AND F-14W PLANS FOR ADDITIONAL INFORMATION.
8. VERIFY RELATIVE ELEVATION DIFFERENCES BETWEEN F-14W AND F-14W2 AT BOTTOM OF NBL AND SBL INTERIOR MOST EXISTING BEAMS AT FROM FACE OF ABUTMENT, SEE ABUTMENT PLAN & ELEVATION SHEETS. IF THE RELATIVE ELEVATION DIFFERENCES VARY BY MORE THAN +/- 1", ADJUST ALL PLAN ELEVATIONS ACCORDINGLY AND SUBMIT TO THE ENGINEER FOR APPROVAL BEFORE MAKING ANY ADJUSTMENTS IN THE FIELD.
9. LINE F-14W2 IS OBTAINED BY CREATING A LINE CONNECTING TWO POINTS EACH LOCATED ALONG THE CENTERLINE BEARING ABUTMENT #1 AND #4 RESPECTIVELY THAT ARE EQUIDISTANT FROM THE CENTERLINE OF THE SBL AND NBL INTERIOR MOST BEAMS.
10. ALL DECK, APPROACH SLAB AND PROFILE GRADE ELEVATIONS ARE TOP OF CONCRETE.
11. HORIZONTAL DIMENSIONS ARE PLAN. VERTICAL DIMENSIONS ARE PLUMB.
12. DO NOT SCALE DRAWINGS.
13. SEE REHABILITATION PLANS, DRAWING NO. M-91 FOR REHABILITATION INFORMATION.
14. SEE UTILITY PLANS FOR ADDITIONAL UTILITY INFORMATION.

OTES

TMENTS ARE PARALLEL
'50"W.

ON FOR 400 NORTH
TING PLANS. ROADWAY TYPICAL
ND IS APPROXIMATE.

NE I-15 ALIGNMENT NOT SHOWN.
S LOCATED AT END OF APPROACH SLABS.

## QUANTITIES

| ITEM | EST | UNIT | AS CONSTR |
|---|---|---|---|
| GRANULAR BACKFILL BORROW (PLAN QUANTITY) | 86 | CU YD | |
| PILE DRIVING EQUIPMENT | 1 | LUMP | |
| DRIVEN PILES 12 3/4 INCH | 1467 | FEET | |
| DYNAMIC PILE TESTING | 3 | EACH | |
| REINFORCING STEEL - COATED | 87575 | LBS | |
| STRUCTURAL CONCRETE (EST.LUMP QTY; 484 CU YD) | 1 | LUMP | |
| STRUCTURAL STEEL (EST.LUMP QTY; 546 LBS) | 1 | LUMP | |
| PRESTRESSED CONCRETE MEMBER (37 FT - 11 INCH TYPE III) | 8 | EACH | |
| PRESTRESSED CONCRETE MEMBER (58FT - 8 INCH TYPE III) | 4 | EACH | |
| PREPARE BRIDGE FOR WIDENING | 1 | LUMP | |
| REPLACE CONCRETE SLOPE PROTECTION | 192 | SQ YD | |

| NO. | DATE | BY | REMARKS |
|---|---|---|---|

REVISIONS

UTAH DEPARTMENT OF TRANSPORTATION
SALT LAKE CITY, UTAH
STRUCTURES DIVISION

URS

DESIGN PH 12/04 CHECK GTD 12/04
DRAWN DKH 12/04 CHECK PH 12/04
QUANT. CDT 12/04 CHECK CEL 12/04

APPROVAL RECOMM. DATE SENIOR DESIGN ENGR.
APPROVED FOR USE BY UDOT DATE UDOT BRIDGE ENGR.

I-15; CORRIDOR IN UTAH COUNTY
400 NORTH OVERPASS IN OREM
SITUATION & LAYOUT 1

PROJECT NUMBER SP-15-6(52)241

UTAH
COUNTY

F-14W2
DRG. NO.

SHT. 1 OF 28

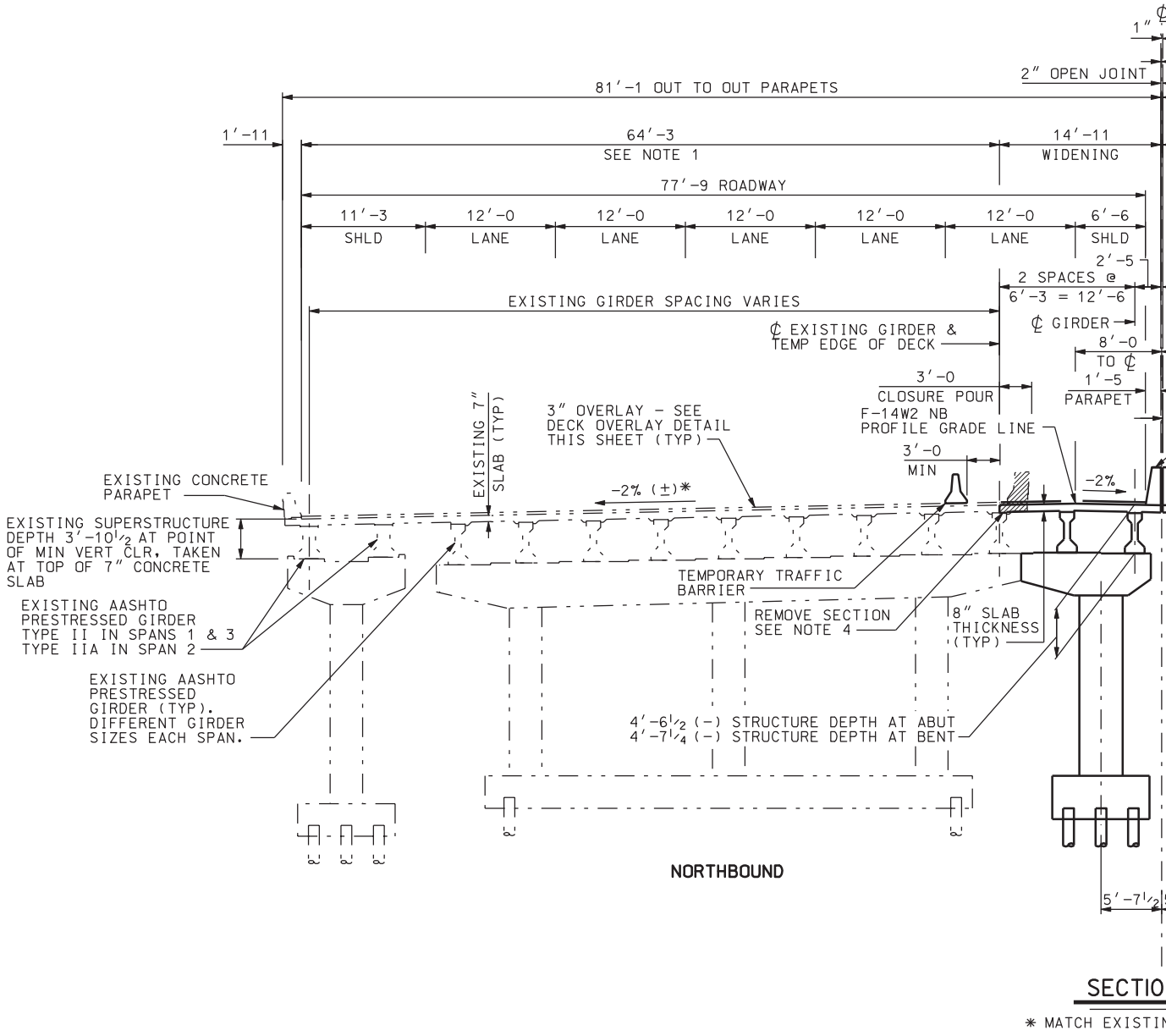


## SECTIO

* MATCH EXISTIN

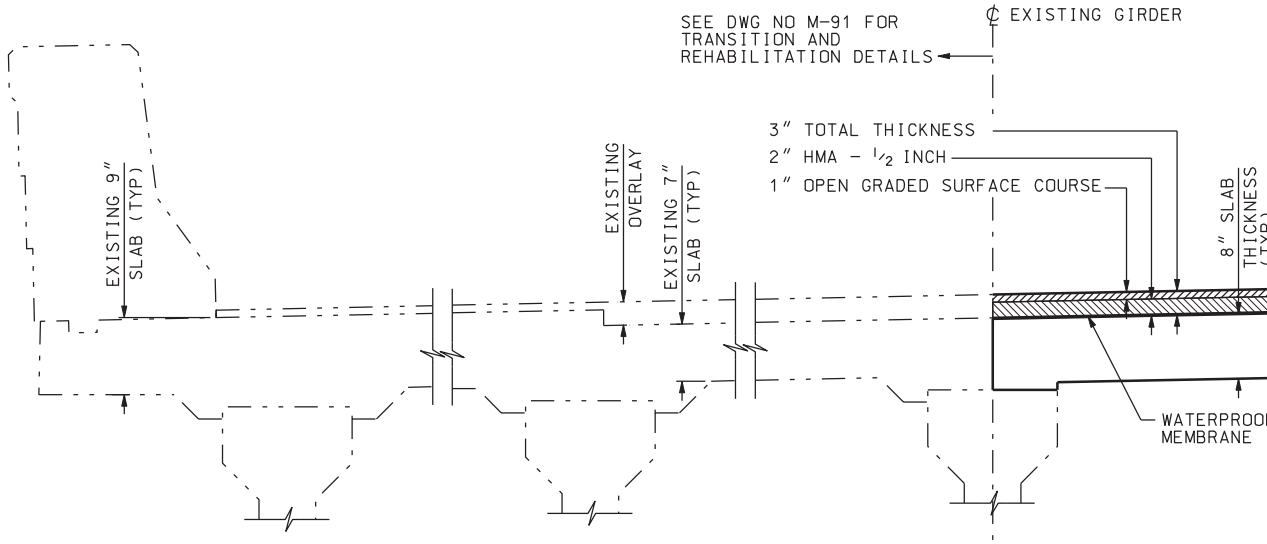


## DECK OVERLAY DETAIL

DGN File:IP_PWPcdns1717\4433_F14_02.dgn

02-MAY-2005

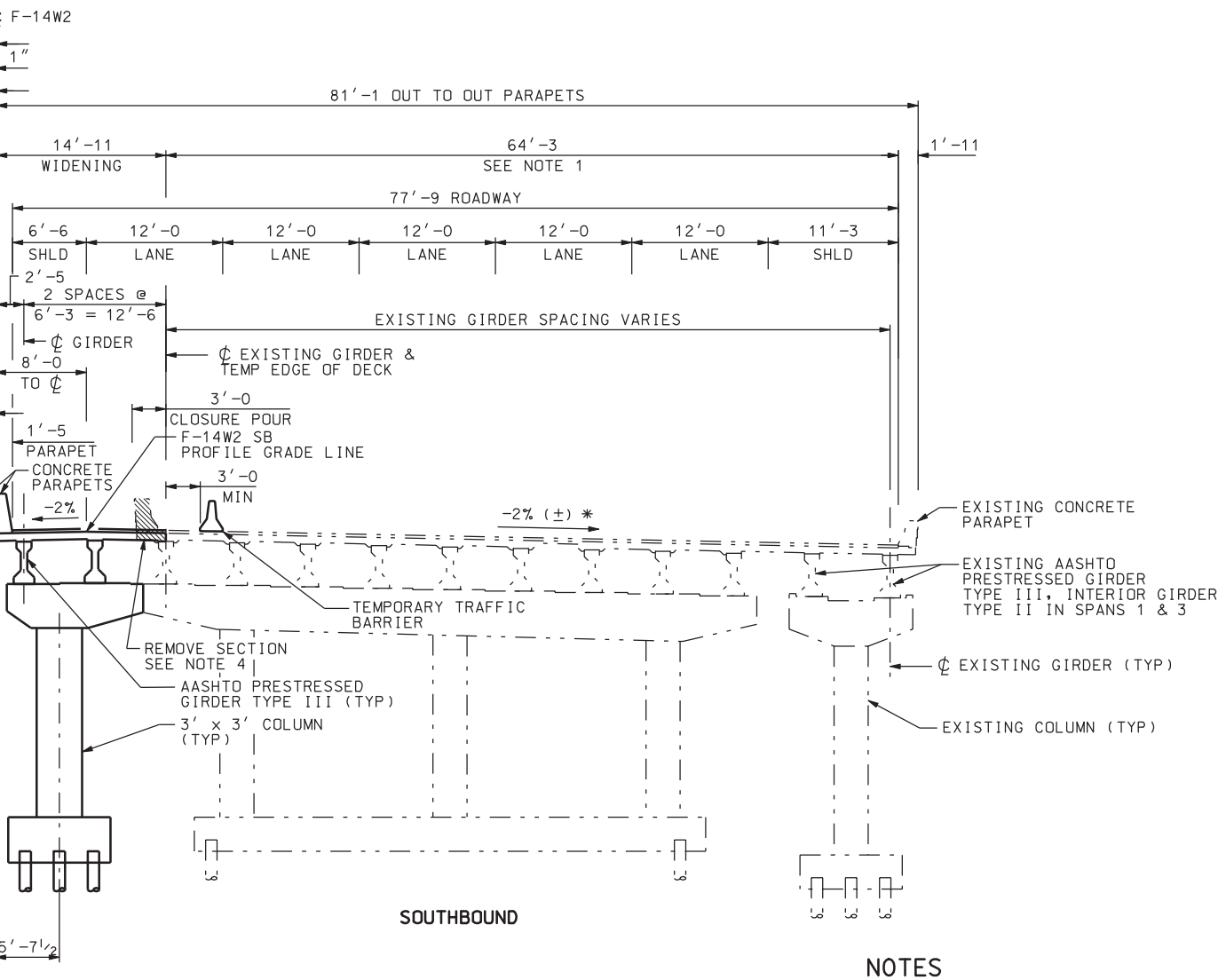


N A-A

NG CROSS SLOPE

## NOTES

1. PARTIALLY REMOVE EXISTING ASPHALT SURFACING OVERLAY. SEE M-91 SHEETS FOR TRANSITION AND REHABILITATION DETAILS.
2. APPLY WATER PROOFING MEMBRANE, PLACE 1" OPEN GRADED SURFACE COURSE AND 2" HMA-½ INCH FOR A TOTAL THICKNESS EQUAL TO 3". SEE DECK OVERLAY DETAIL AND M-91 SHEETS.
3. PROFILE GRADE LINES LOCATED 8'-0 FROM ℄ F-14W2 AND IS AT TOP OF NEW CONCRETE DECK.
4. SEE SPECIAL PROVISION "PREPARE BRIDGE FOR WIDENING" FOR FURTHER INSTRUCTIONS.

3" OVERLAY

FING

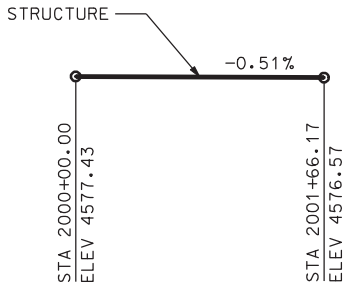


F-14W2 NB & SB PROFILE

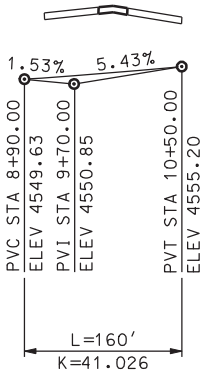


400 NORTH PROFILE (EXIST)

LOOKING NORTH

| NO. | DATE | BY | REMARKS |
|---|---|---|---|
| | | | |

REVISIONS

UTAH DEPARTMENT OF TRANSPORTATION
SALT LAKE CITY, UTAH
STRUCTURES DIVISION

URS

DESIGN PH 12/04 CHECK GTD 12/04
DRAWN DKH 12/04 CHECK PH 12/04
QUANT. CDT 12/04 CHECK CEL 12/04

APPROVAL RECOMM. DATE SENIOR DESIGN ENGR.
APPROVED FOR USE BY UDOT DATE UDOT BRIDGE ENGR.

I-15; CORRIDOR IN UTAH COUNTY
400 NORTH OVERPASS IN OREM
SITUATION & LAYOUT 2

PROJECT NUMBER SP-15-6(52)241

UTAH
COUNTY

F-14W2
DRG. NO.

SHT. 2 OF 28

# DRILL HOLE LOG

## BORING NO. 04–1

Sheet: 1 of 1

PROJECT: I-15, CORRIDOR IN UTAH COUNTY - STRUCTURE F14 PROJECT NO.: 200401.045
CLIENT: UTAH DEPARTMENT OF TRANSPORTATION DATE: 8/4/04
LOCATION: SEE SITE PLAN: N 83653, E 212057 ELEVATION: 4553.2'
DRILLER: D. SAMPSON, A. HARTVIGSEN LOGGED BY: M.H., V.N.B.
EQUIP./DRILL METHOD: CME-55 / N.W. CASING
DEPTH TO WATER - INITIAL: ▽ 10.1' AFTER 24 HOURS: ▽ 10.0'

| Elev. (Feet) | Depth (Feet) | Lith-ology | Sample Type | Sample Rec. (In.) | Sample Blows Per 6" & Torvane (tsf) | USCS (AASHTO) | Material Description | Dry Density, pcf | Moisture Content, % | Atter. Liquid Limit, % | Atter. Plasticity Index, % | Gradation Gravel, % | Gradation Sand, % | Gradation Silt/Clay, % | Other Tests |
|---|---|---|---|---|---|---|---|---|---|---|---|---|---|---|---|
| | | | | | | | CONCRETE | | | | | | | | |
| 4550 | | | | 12 | 7,10,22 | GP-GM | brown, moist, dense — POORLY GRADED GRAVEL W/SAND & SILT | | | | | | | | |
| 4545 | 5 | | | 12 | 13,14,16 | SM | lt. brown, slightly moist, med. dense | | | | | | | | |
| 4540 | 10 | | | 13 | 6,8,10 | SP-SM (A-3) | lt. brown, wet, med. dense, w/some thin clay lenses — SILTY FINE SAND | | 22.7 | | NP | 0 | 91 | 9 | |
| | | | | | | | ~3" clay layer at 14' | | | | | | | | |
| 4535 | 15 | | | 14 | 3,8,8 | SM | brown, wet, med. dense, w/clayey silt lenses | | | | | | | | |
| 4530 | 20 | | | 16 | Pushed 0.42 | CL (A-6(11)) | lt. brown, moist to wet, firm — LEAN CLAY W/SILTY SAND LENSES | 93.5 | 32.9 | 39 | 18 | 0 | 5 | 95 | UC CT |
| 4525 | 25 | | | 16 | 8,13,14 | SM | brown, wet, med. dense — SILTY FINE TO MEDIUM SAND | | | | | | | | |
| 4520 | 30 | | | - | Pushed 4,4,4 | SM (A-4(3)) | lt. brown, moist, med. dense | | 23.6 | | NP | 0 | 53 | 47 | |
| | | | | 18 | 0.59 | CL | lt. brown, moist, firm — LEAN CLAY | | | | | | | | |
| 4515 | 35 | | | 9 | 17,21,25 | GP-GM | brown, wet, dense — POORLY GRADED GRAVEL W/SILT & SAND | | | | | | | | |
| 4510 | 40 | | | 6 | 22,41,52 | SM (A-4) | brown, wet, dense — SILTY SAND W/GRAVEL | | 9.8 | | NP | 16 | 48 | 36 | |
| 4505 | 45 | | | 16 | 10,15,14 | SM | brown, wet, med. dense — SILTY SAND W/SANDY SILT LENSES | | | | | | | | |
| | 50 | | | 18 | 12,24,28 | SM (A-3) | brown, wet, very dense — POORLY GRADED SAND W/SILT | | 19.9 | | NP | 1 | 87 | 12 | |

# DRILL HOLE LOG

## BORING NO. 04–2

Sheet: 1 of 1

PROJ
CLIEN
LOCA
DRILL
EQUIP
DEPT

| Elev. (Feet) | Depth (Feet) | Lith-ology | Type | Rec. (In.) | Blows Per 6" & Torvane (tsf) |
|---|---|---|---|---|---|
| 4575 | | | | 15 | 5,9,13 |
| 4570 | 5 | | | 15 | 13,18,17 |
| 4565 | 10 | | | 10 | 3,3,5 |
| | | | | 10 | 6,11,14 |
| 4560 | 15 | | | 15 | 10,13,20 |
| 4555 | 20 | | | 15 | 12,15,16 |
| | | | | 12 | 17,22,23 |
| 4550 | 25 | | | 9 | 5,9,10 |
| | | | | 11 | 6,9,11 |
| 4545 | 30 | | | 14 | 7,10,13,12 |

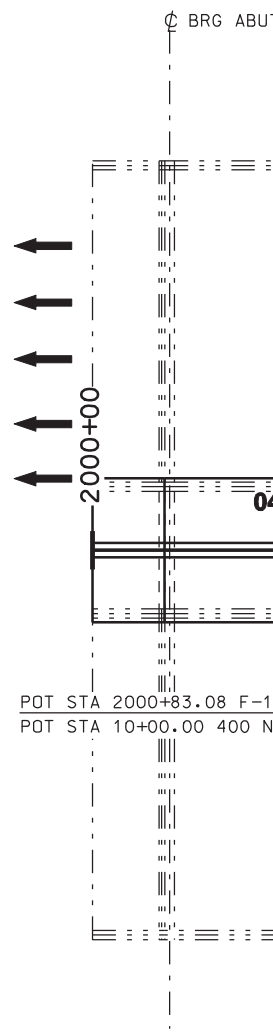


DGN File: IP_PWPcdns1717\4433_F14_03.dgn

02-MAY-2005

ECT: I-15, CORRIDOR IN UTAH COUNTY - STRUCTURE F14 PROJECT NO.: 200401.045
NT: UTAH DEPARTMENT OF TRANSPORTATION DATE: 8/9/04
TION: SEE SITE PLAN: N 83532, E 212047 ELEVATION: 4575.7'
LER: D. SAMPSON, A. HARTVIGSEN LOGGED BY: M.H., V.N.B.
P./DRILL METHOD: CME-55 / N.W. CASING
H TO WATER - INITIAL: ▽ N.M. AFTER 24 HOURS: ▽ NOT MEASURED

| LE | USCS (AASHTO) | Material Description | | Dry Density, pcf | Moisture Content, % | Atter. Liquid Limit, % | Atter. Plasticity Index, % | Gradation Gravel, % | Gradation Sand, % | Gradation Silt/Clay, % | Other Tests |
|---|---|---|---|---|---|---|---|---|---|---|---|
| | SM | lt. brown | SILTY SAND | | | | | | | | |
| | CL | dk. gray | SANDY CLAY | | | | | | | | |
| | SM | lt. brown, dry, med. dense, w/some gravel | | | | | | | | | |
| | SM (A-3) | brown, slightly moist, dense | | | 8.0 | | NP | 8 | 70 | 22 | |
| | | | SILTY SAND | | | | | | | | |
| | SM (A-3) | layered lt. & dk. brown, moist, loose | | | 12.8 | | NP | 9 | 75 | 16 | |
| | SM | brown, moist, dense, trace of gravel | | | | | | | | | |
| | SM | brown, moist, dense | INTERBEDDED SILTY SAND & SANDY SILT | | | | | | | | |
| | SM | brown | SILTY SAND | | | | | | | | |
| | SM | dk. gray, slightly moist, dense | VERY SILTY FINE SAND W/GRAVEL | | | | | | | | |
| | SM (A-3) | brown, slightly moist, dense | SILTY SAND W/TRACE OF GRAVEL & CLAY LENSES some wood | | 11.2 | | NP | 2 | 75 | 23 | |
| | SM | brown, slightly moist, med. dense | SILTY SAND (natural or fill?) | | | | | | | | |
| | SM | brown, moist, med. dense, w/rusty lenses | SILTY FINE SAND (natural) | | | | | | | | |
| 2 | SM | brown, wet, med. dense | | | | | | | | | |

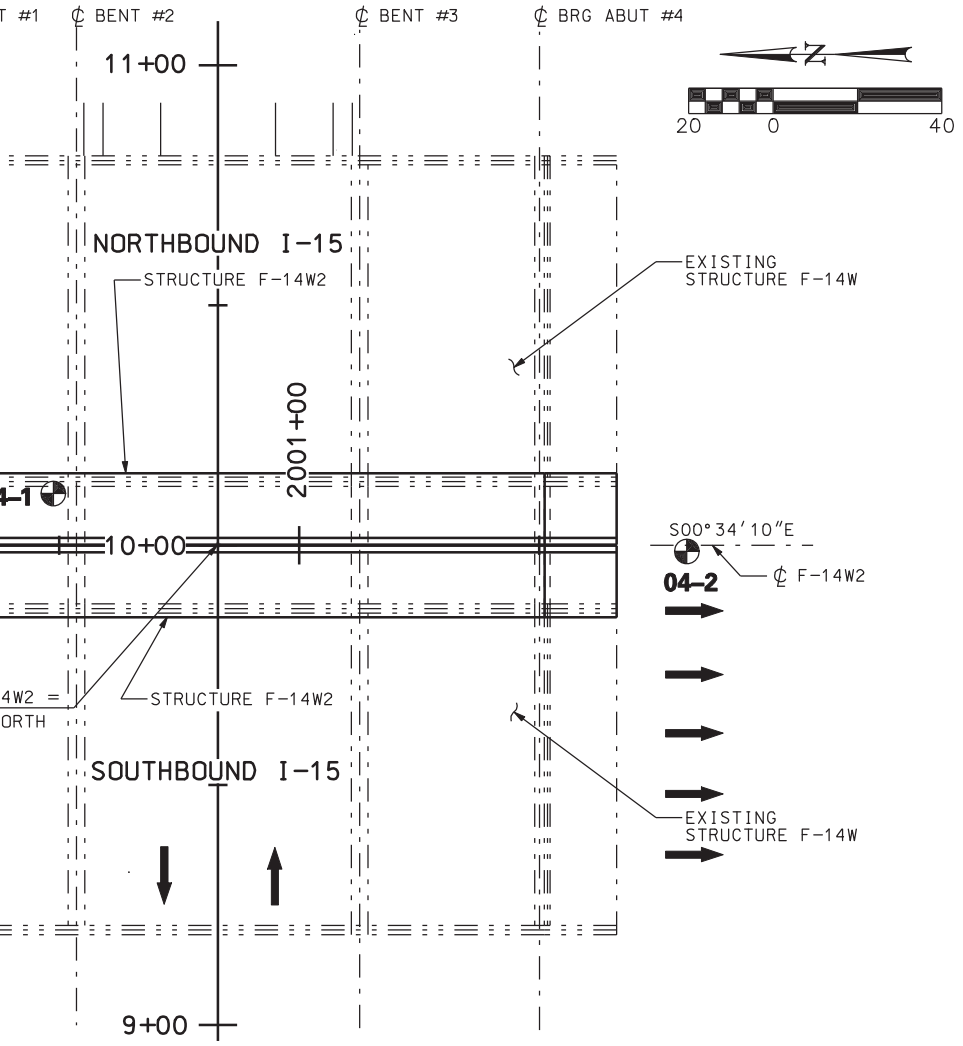


LOCATION PLAN

# KEY TO BORING LOG

## SYMBOLS

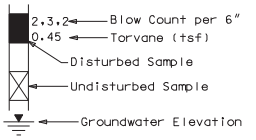


UC = Unconfined Compression Test
CT = Consolidation Test
SG = Specific Gravity Test
DS = Direct Shear Test

## RELATIVE DENSITY (NON-PLASTIC - SAND & SILT)

VERY LOOSE N<4
LOOSE N 4-10
MED DENSE N 10-30
DENSE N 30-50
VERY DENSE N>50

## CONSISTENCY (PLASTIC - SILT & CLAY)

VERY SOFT N<2
SOFT N 2-4
MEDIUM STIFF N 4-8
STIFF N 8-15
VERY STIFF N 15-30
HARD N>30

## GENERAL NOTES

1. THE SUBSURFACE EXPLORATIONS SHOWN WERE CONDUCTED BETWEEN 08-04-04 AND 08-09-04 BY RB&G ENGINEERING, INC..
2. THESE BORING LOGS REPRESENT A SYNOPSIS OF THE SOIL DEPOSITS ENCOUNTERED WITHIN EACH BORING AND ARE BASED ON SOUND GEOLOGICAL AND ENGINEERING JUDGMENT. BECAUSE SOIL IS A COMPLEX MEDIUM, THESE BORING LOGS MAY OR MAY NOT REPRESENT THE SOIL CONDITIONS AT THIS SITE. THIS SUBSURFACE INTERPRETATION IS PRESENTED IN GOOD FAITH AND IS NOT INTENDED AS A SUBSTITUTE FOR PERSONAL INVESTIGATION AND JUDGEMENT OF THE CONTRACTOR.
3. THE WATER LEVELS AND CONDITIONS INDICATED ON THE BORING LOGS REPRESENT HOLE CONDITIONS ON THE DATE SHOWN, HOWEVER, IT SHOULD BE NOTED, THAT AT LOCATIONS AWAY FROM THE BORINGS OR AT ANOTHER TIME THE WATER LEVELS AND CONDITIONS MAY VARY SIGNIFICANTLY.
4. THE STRATIFICATION LINES REPRESENT THE APPROXIMATE BOUNDARIES BETWEEN SOIL TYPES AND THE TRANSITION MAY BE GRADUAL.
5. COBBLE - A ROCK WITH AN AVERAGE DIMENSION BETWEEN 3 INCHES AND 12 INCHES
6. BOULDER - A ROCK WITH AN AVERAGE DIMENSION OF 12 INCHES OR GREATER

NOTE: DRILL RIG USED - CME 55
HAMMER E=0.75

GEOTECHNICAL ENGINEER

| NO. | DATE | BY | REMARKS |
|---|---|---|---|
| | | | |

REVISIONS

UTAH DEPARTMENT OF TRANSPORTATION
SALT LAKE CITY, UTAH
STRUCTURES DIVISION

URS

CHECK VNB 10/04
CHECK BEP 10/04
CHECK
DESIGN MHH 8/04
DRAWN JPN 10/04
QUANT.
APPROVAL RECOMM. DATE SENIOR DESIGN ENGR.
APPROVED FOR USE BY UDOT DATE UDOT BRIDGE ENGR.

I-15; CORRIDOR IN UTAH COUNTY
400 NORTH OVERPASS IN OREM
SOIL DATA SHEET
PROJECT NUMBER SP-15-6(52)241

UTAH
COUNTY
F-14W2
DRG. NO.
SHT. 3 OF 28

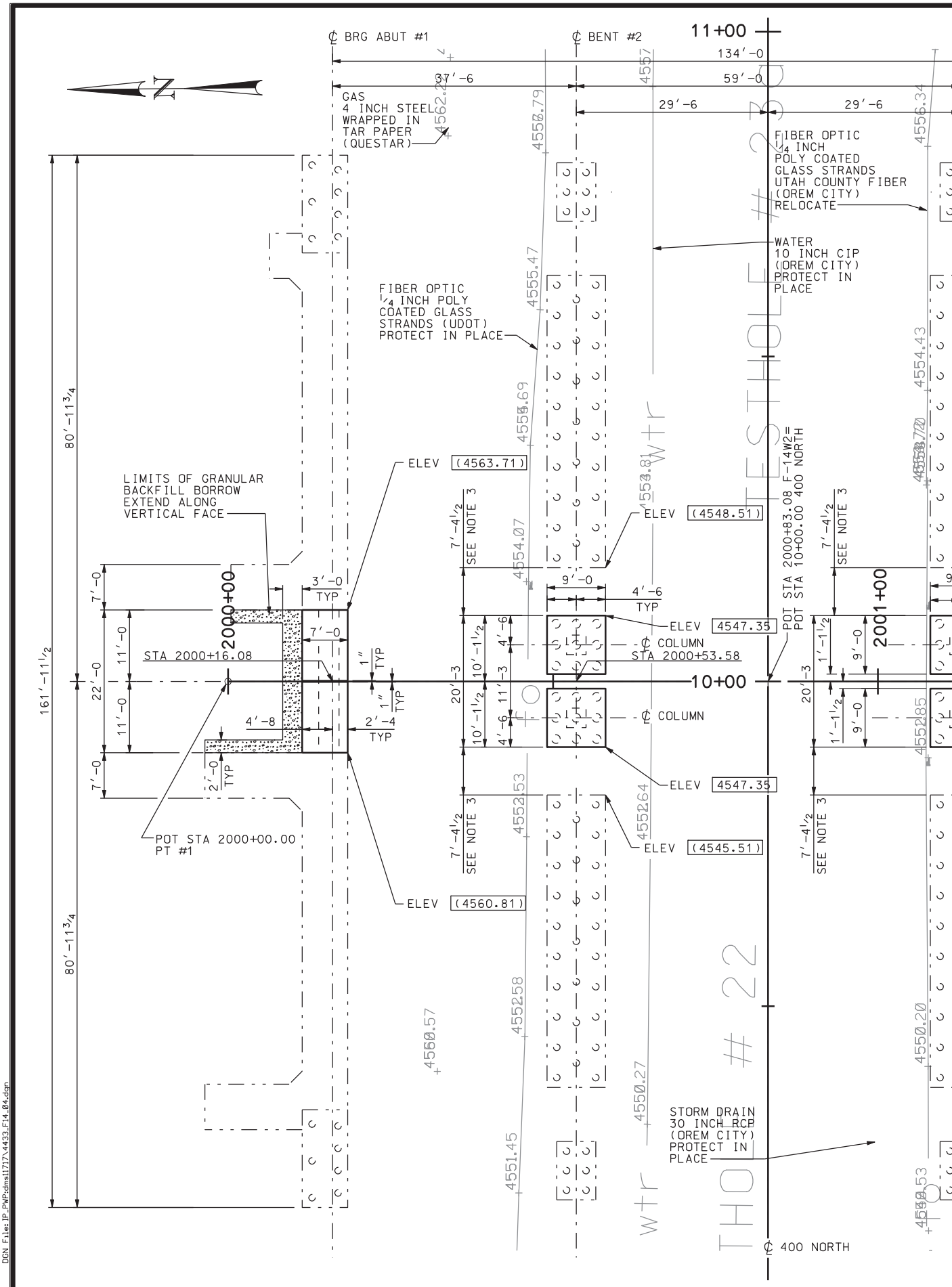


FOUNDATION PLAN

DGN File:IP_PWPcdms1717\4433_F14_04.dgn

02-MAY-2005

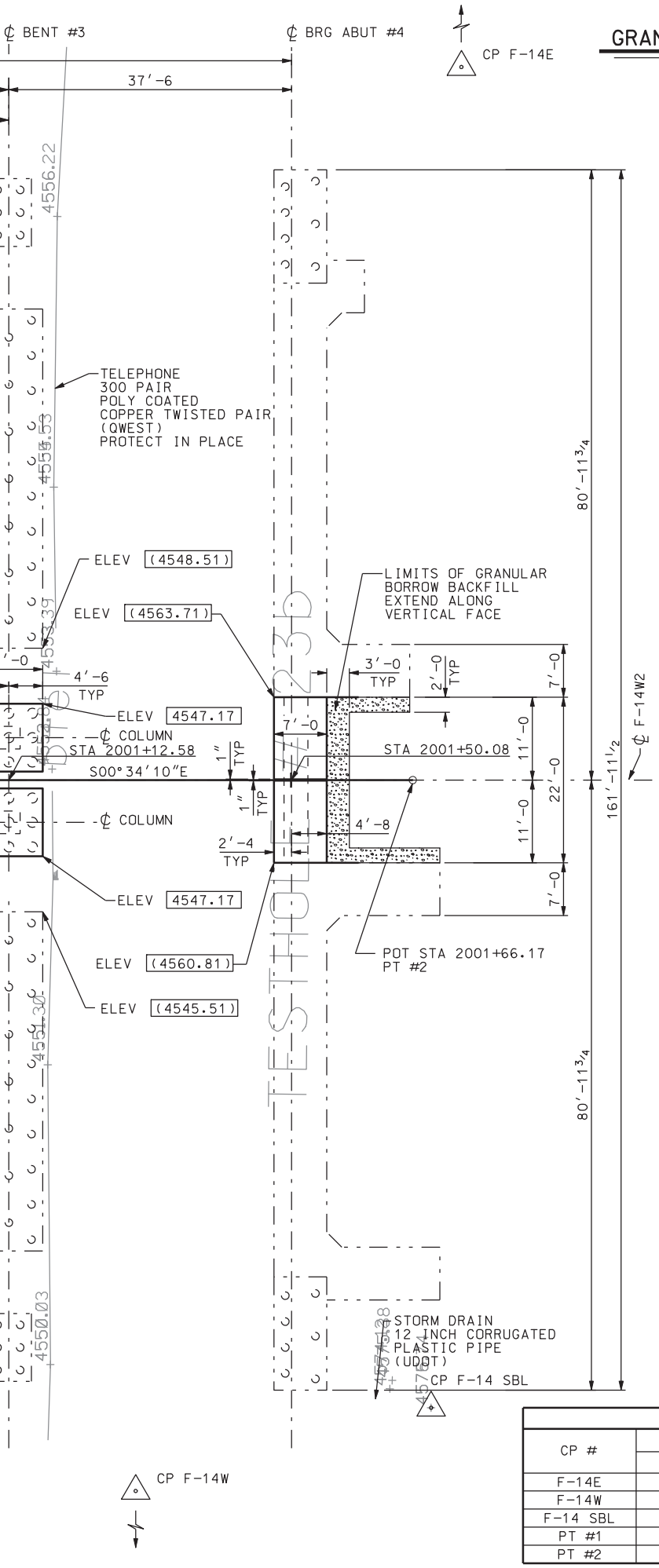


## GRANULAR BACKFILL BORROW QUANTITIES

| LOCATION | UNITS |
|---|---|
| ABUTMENTS | 86.0 CU YDS |

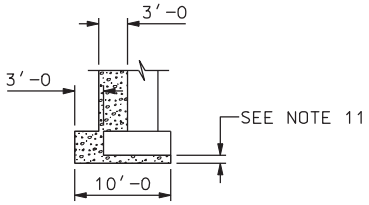


## LIMITS OF GRANULAR BACKFILL BORROW AT ABUTMENT

## NOTES

1. ALL BENTS AND ABUTMENTS ARE PARALLEL TO BEARING S89°25'50"W
2. ELEVATIONS AT THE BOTTOM OF FOOTING ARE SHOWN ENCLOSED IN RECTANGLES. E.G. 4534.40. ELEVATIONS SHOWN IN (FEET) ARE APPROXIMATE EXISTING BOTTOM OF FOOTING ELEVATIONS BASED ON SURVEY DATA.
3. DIMENSIONS TO EXISTING FOUNDATIONS ARE APPROXIMATE AND BASED ON EXISTING PLANS.
4. LOCATE ℄ NEW BENT AS AN EXTENSION OF THE BEARING ALONG ℄ OF EXISTING BENT.
5. ALIGN FRONT FACE OF ABUTMENT WALL WITH FRONT FACE OF EXISTING ABUTMENT WALL.
6. PROVIDE BRACED EXCAVATION AT TOE OF ABUTMENT FILL AS NECESSARY DURING CONSTRUCTION.
7. BACKFILL BEHIND ABUTMENT NOT TO BE PLACED HIGHER THAN FILL IN FRONT OF THE ABUTMENT UNTIL SUPERSTRUCTURE IS IN PLACE. AFTER SUPERSTRUCTURE IS PLACED, BACKFILL TO BE PLACED UNIFORMLY AT BOTH ABUTMENTS TO EQUALIZE WALL PRESSURE.
8. AT ABUTMENTS, SOIL BEARING PRESSURE, Qr (Str I) = 7.35 KSF.
9. FINAL DEPTH OF EXCAVATION BENEATH SPREAD FOOTINGS TO BE INSPECTED AND APPROVED BY ENGINEER TO ENSURE THAT LESS COMPETENT SOILS ARE COMPLETELY REMOVED. MINIMUM EXCAVATION WIDTH EQUAL TO FOOTING WIDTH PLUS OVEREXCAVATION DEPTH PLUS 2 FEET. REPLACE OVEREXCAVATED MATERIAL WITH STRUCTURAL FILL TO FOOTING LEVEL IN ACCORDANCE WITH SPECIAL PROVISION 02056S.
10. UTILITIES DESIGNATED AS "RELOCATE" ARE THE DESIGN-BUILD RESPONSIBILITY OF THE CONTRACTOR. REFER TO UTILITY RELOCATION (DESIGN-BUILD) SPECIFICATION 00728S. SEE UT-12 FOR UTILITIES DATA NOT SHOWN.
11. FOR SPREAD FOOTINGS PLACED ON EXISTING SUBGRADE MATERIAL, SCARIFY THE UPPER 10 INCHES BELOW THE FOOTING ELEVATION, MOISTURE CONDITION, AND RECOMPACT TO AT LEAST 96% OF THE MAXIMUM LABORATORY DENSITY AS REQUIRED BY UDOT STANDARD SPECIFICATION SECTION 02324.

CONTROL POINT DATA

| CP # | COORDINATES | | ELEVATION |
|---|---|---|---|
| | E | N | |
| F-14E | 212,230.23 | 83,587.95 | 4561.92 |
| F-14W | 211,828.93 | 83,658.64 | 4547.77 |
| F-14 SBL | 211,963.52 | 83,535.83 | 4575.74 |
| PT #1 | 212,045.15 | 83,705.24 | |
| PT #2 | 212,046.80 | 83,539.08 | |

| NO. | DATE | BY | REMARKS |
|---|---|---|---|
| | | | |

REVISIONS

UTAH DEPARTMENT OF TRANSPORTATION
SALT LAKE CITY, UTAH
STRUCTURES DIVISION

URS

DESIGN PH 12/04 CHECK GTD 12/04
DRAWN DKH 12/04 CHECK PH 12/04
QUANT. CDT 12/04 CHECK CEL 12/04

APPROVAL RECOMM. DATE SENIOR DESIGN ENGR.
APPROVED FOR USE BY UDOT DATE UDOT BRIDGE ENGR.

I-15; CORRIDOR IN UTAH COUNTY
400 NORTH OVERPASS IN OREM
FOUNDATION PLAN

PROJECT NUMBER SP-15-6(52)241

UTAH
COUNTY

F-14W2
DRG. NO.

SHT. 4 OF 28

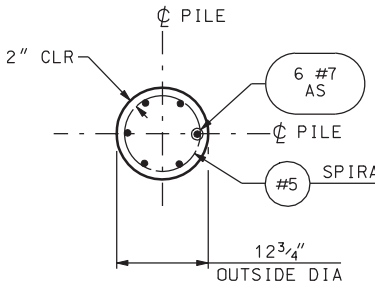


SECTION A-A

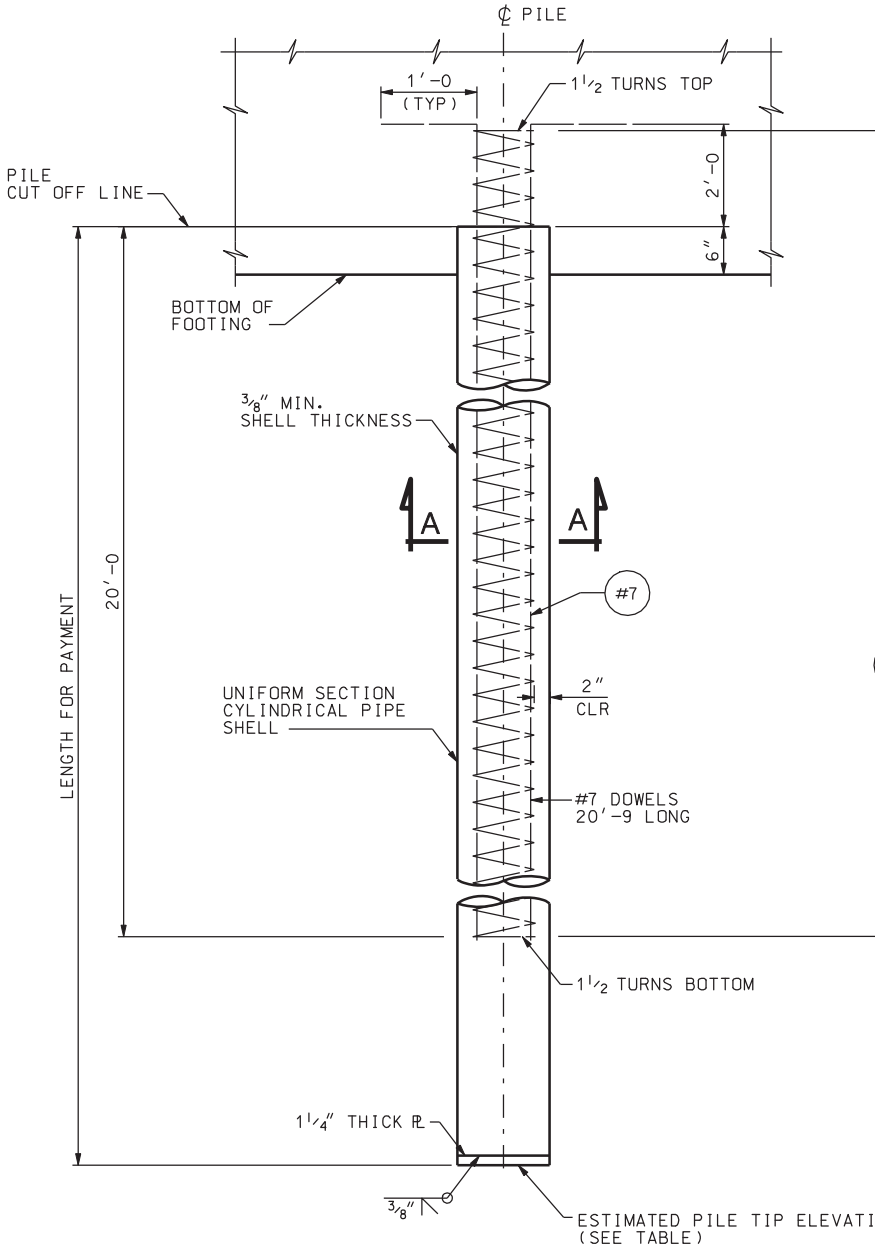


ELEVATION

| PILE DATA | | | | | | |
|---|---|---|---|---|---|---|
| LOCATION | ESTIMATED PILE TIP ELEV (FT) | ELEV. OF MIN. ACCEPTABLE PILE PENETRATION (FT) | SERVICE I PILE RESISTANCE (KIPS) | STRENGTH I PILE RESISTANCE (KIPS) | REQUIRED DRIVING RESISTANCE (KIPS) | AS CONST PILE TIP ELEV (FT) |
| BENT #2 | 4507 | 4515 | 200 | 131 | 274 | |
| BENT #3 | 4507 | 4515 | 200 | 131 | 274 | |

NOTE: SERVICE I PILE RESISTANCE WAS DETERMINED ASSUMING TOLERABLE SETTLEMENT OF 1 INCH.

DGN File:IP_PWPcdns1717\4433_F14_05.dgn
02-MAY-2005

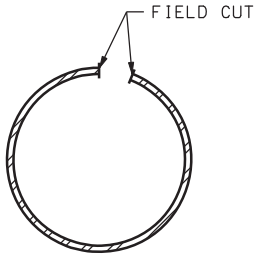


NOTE:
FIELD CUT PIECE OF PILE SO WHEN COMPRESSED
IT WILL SLIDE INSIDE PILE SECTIONS.

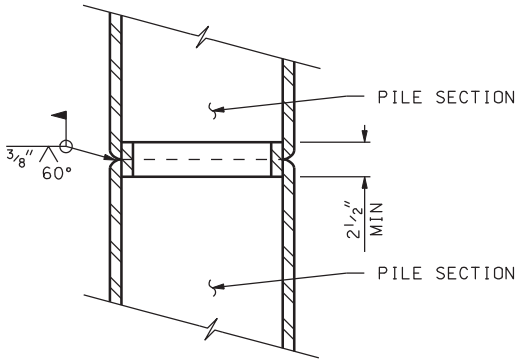


## SPLICE DETAIL

SPLICES SHALL BE FULL
STRENGTH WELDED SPLICES.

## NOTES

1. FILL PIPE SHELLS WITH CLASS "A" CONCRETE.
2. HOLD REINFORCING STEEL ADEQUATELY IN FINAL POSITION DURING PLACEMENT OF CONCRETE AROUND BARS.
3. PILE HAMMER SHALL HAVE A MINIMUM RATED ENERGY OF 25 KIP-FEET.
4. USE PILES MEETING ASTM A252 GRADE 3 WITH A MINIMUM YIELD STRENGTH OF 45 KSI.
5. PILE TIP ELEVATIONS ARE APPROXIMATE. VERIFY THESE ELEVATIONS AT THE TIME OF CONSTRUCTION IN ACCORDANCE WITH THE SPECIFICATIONS.

SPIRAL AT 6" PITCH

#5

ON

| NO. | DATE | BY | REMARKS |
|---|---|---|---|
| | | | |

REVISIONS

UTAH DEPARTMENT OF TRANSPORTATION
SALT LAKE CITY, UTAH
STRUCTURES DIVISION

URS

DESIGN PH 12/04 CHECK GTD 12/04
DRAWN DKH 12/04 CHECK PH 12/04
QUANT. CDT 12/04 CHECK CEL 12/04

APPROVAL RECOMM. DATE SENIOR DESIGN ENGR.
APPROVED FOR USE BY UDOT DATE UDOT BRIDGE ENGR.

I-15; CORRIDOR IN UTAH COUNTY
400 NORTH OVERPASS IN OREM
DRIVEN PILE DETAILS

PROJECT NUMBER SP-15-6(52)241

UTAH
COUNTY

F-14W2
DRG. NO.

SHT. 5 OF 28

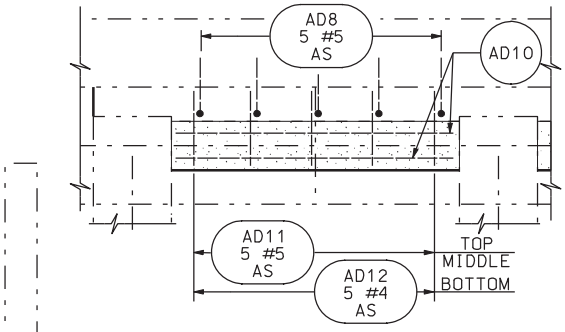


## DETAIL D

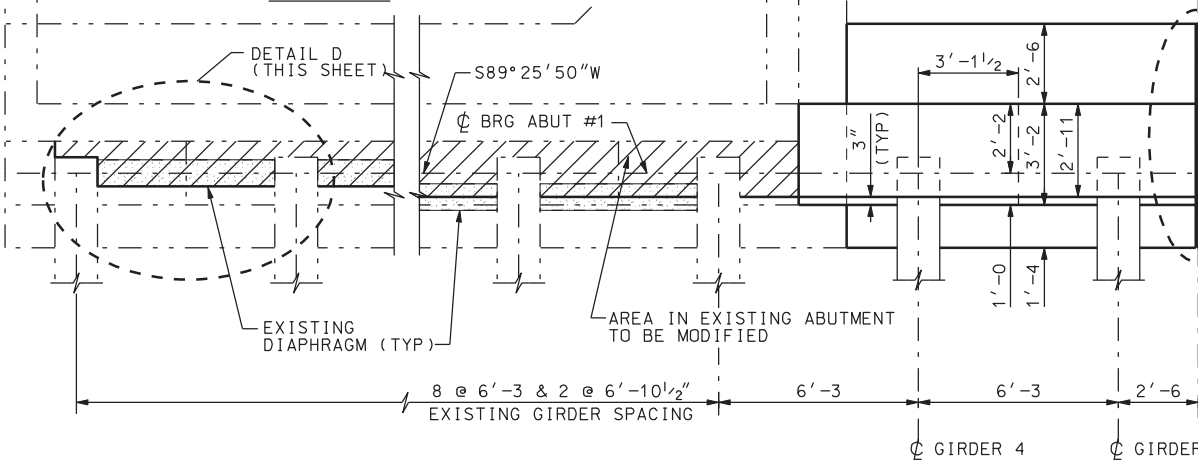


## PL

(DECK NO

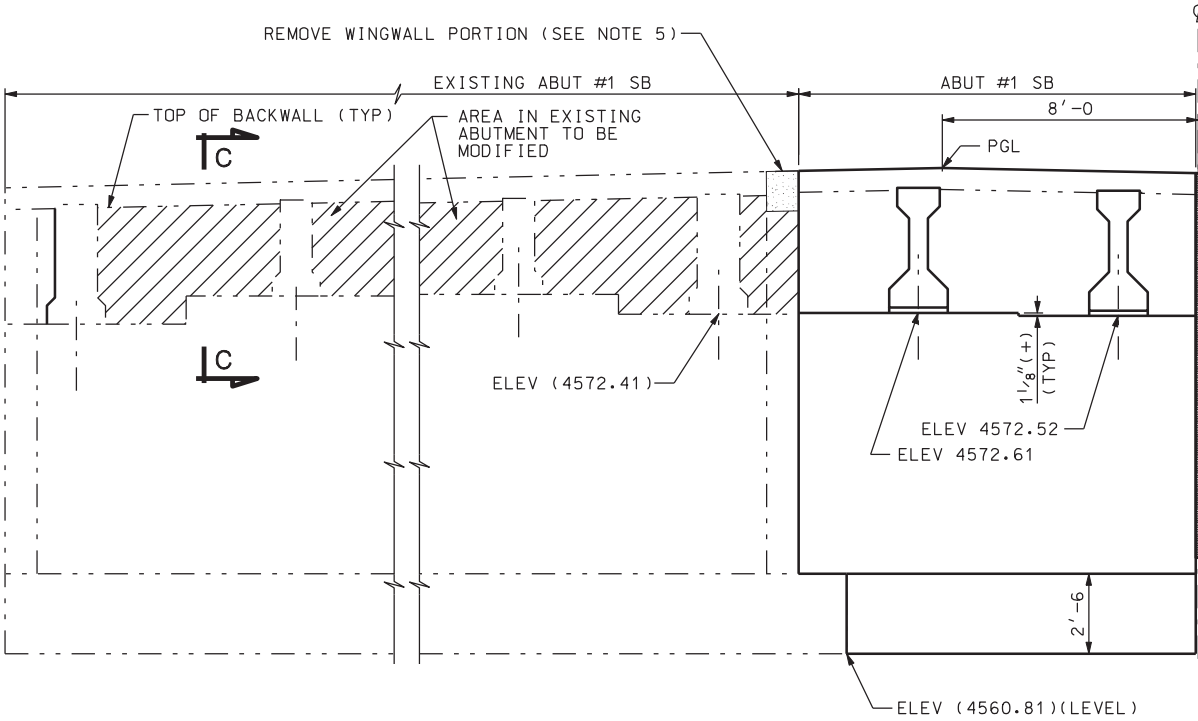


## CONCRETE QUANTITIES

| LOCATION | ABUT #1 | UNITS |
|---|---|---|
| FOOTING | 14.2 | CU YDS |
| STEM | 22.8 | CU YDS |
| DIAPHRAGM | 10.4 | CU YDS |
| MODIFIED DIAPHRAGM | 19.8 | CU YDS |
| TOTAL | 67.2 | CU YDS |

## ELEV

LOOKING
(PARAPET

DGN File:IP_PWPcdms1717\4433_F14_06.dgn
02-MAY-2005

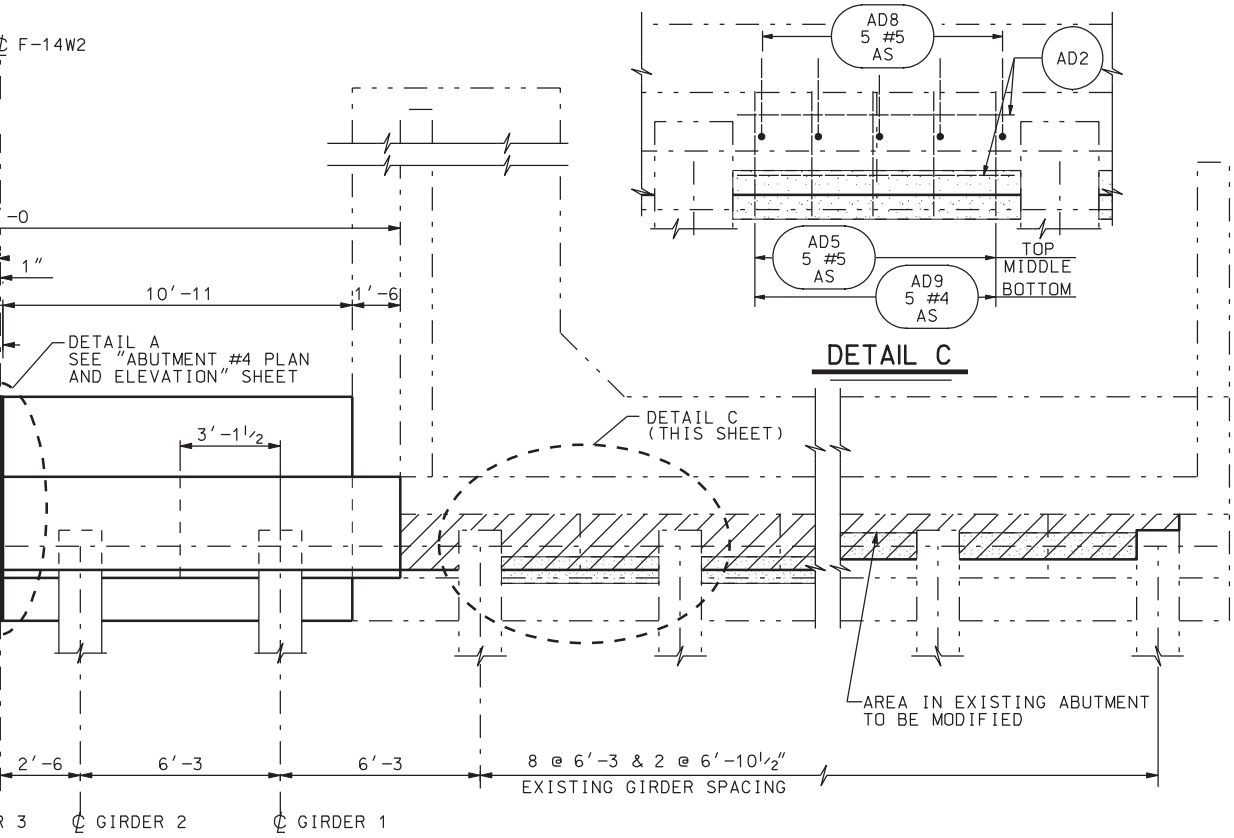


AN

OT SHOWN)

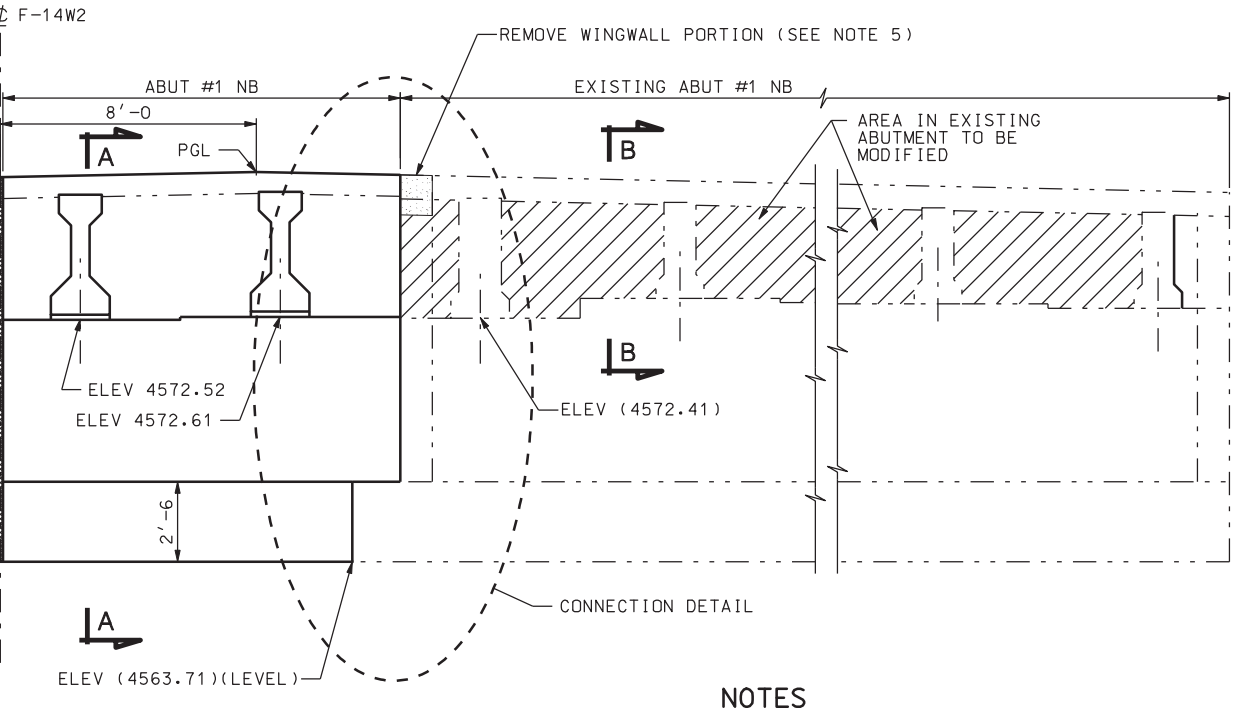


VATION

BACKSTATION
NOT SHOWN)

## NOTES

1. FOR SECTION A-A, SECTION B-B, SECTION C-C, DETAIL A AND CONNECTION DETAIL, SEE "ABUTMENT DETAILS" SHEET.
2. FOR BEARING DETAILS SEE "DIAPHRAGM & BEARING DETAILS" SHEET.
3. FINISH BRIDGE SEAT BEARING AREA (2" LARGER THAN BEARING PAD) HIGH AND RUBBED OR GROUND LEVEL TO ELEVATION SHOWN ± ⅛". NO GROUTING ALLOWED.
4. FIGURES SHOWN IN PARENTHESIS ARE APPROXIMATE (FEET) BASED ON SURVEY INFORMATION.
5. REMOVE PARTIAL WINGWALL 1'-6 MIN. PROVIDE 6" MIN OF RIGID PLASTIC FOAM BETWEEN TOP OF EXISTING WINGWALL AND BOTTOM OF APPROACH SLAB.
6. ALIGN FRONT FACE OF ABUTMENT WALL WITH FRONT FACE OF EXISTING ABUTMENT WALL.

| NO. | DATE | BY | REMARKS |
|---|---|---|---|

REVISIONS

UTAH DEPARTMENT OF TRANSPORTATION
SALT LAKE CITY, UTAH
STRUCTURES DIVISION

URS

DESIGN PH 12/04 CHECK GTD 12/04
DRAWN DKH 12/04 CHECK PH 12/04
QUANT. CDT 12/04 CHECK CEL 12/04

APPROVAL RECOMM. DATE SENIOR DESIGN ENGR.
APPROVED FOR USE BY UDOT DATE UDOT BRIDGE ENGR.

I-15; CORRIDOR IN UTAH COUNTY
400 NORTH OVERPASS IN OREM
ABUTMENT #1 PLAN & ELEVATION

PROJECT NUMBER SP-15-6(52)241

UTAH
COUNTY

F-14W2
DRG. NO.

SHT. 6 OF 28

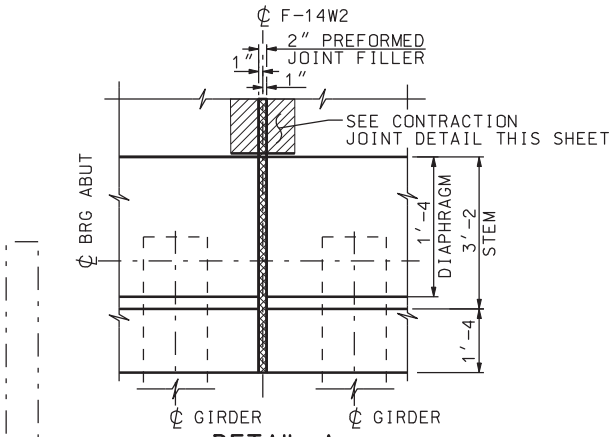


DETAIL A

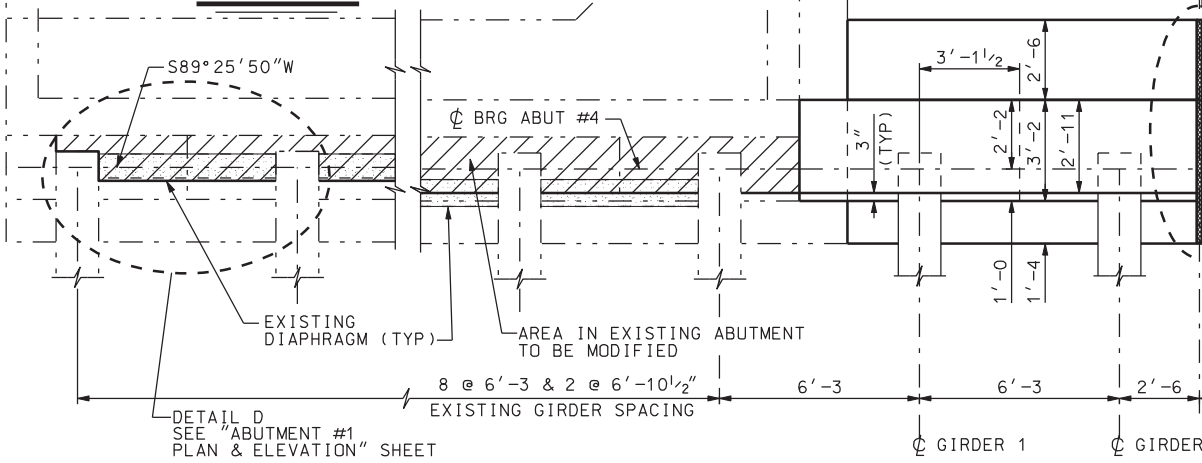


PL

(DECK N

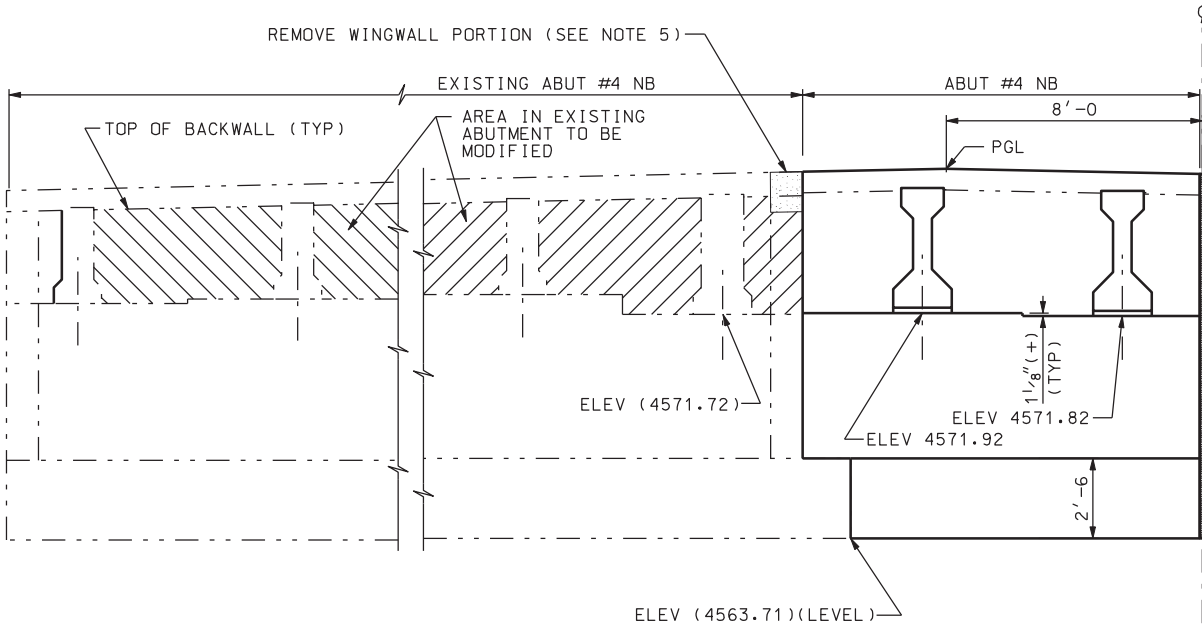


## CONCRETE QUANTITIES

| LOCATION | ABUT #4 | UNITS |
|---|---|---|
| FOOTING | 14.2 | CU YDS |
| STEM | 20.9 | CU YDS |
| DIAPHRAGM | 10.4 | CU YDS |
| MODIFIED DIAPHRAGM | 19.8 | CU YDS |
| TOTAL | 65.3 | CU YDS |

ELE

LOOKING
(PARAPET

DGN File:IP_PWPcdms1717\4433_F14_07.dgn
02-MAY-2005

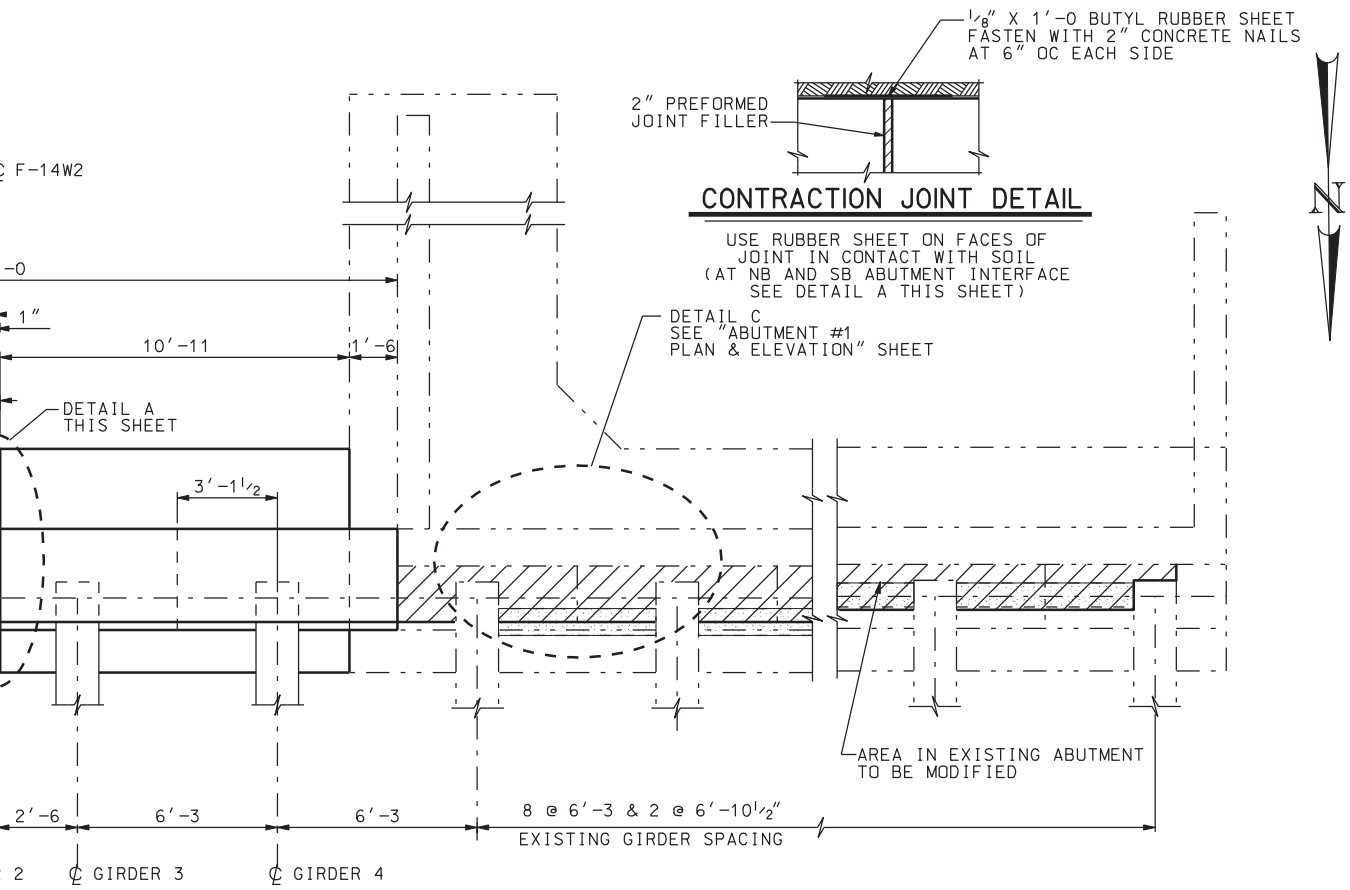


LAN

OT SHOWN)

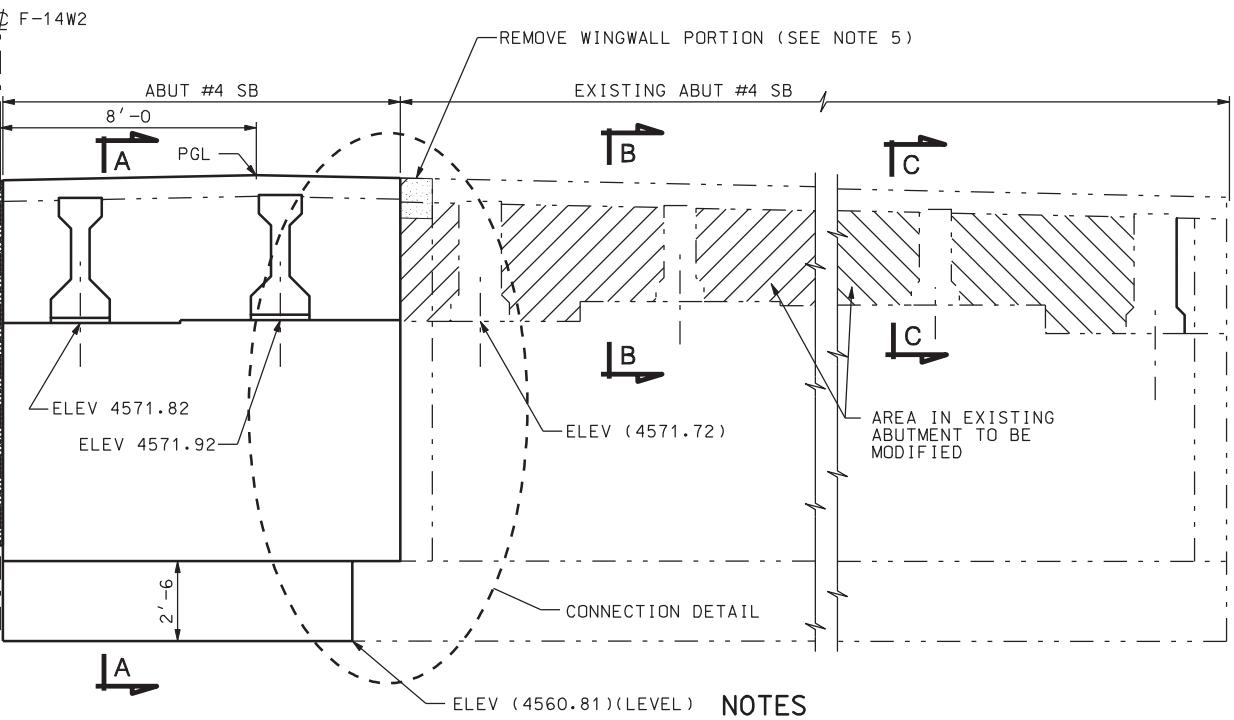


VATION

BACKSTATION
NOT SHOWN)

## NOTES

1. FOR SECTION A-A, SECTION B-B, SECTION C-C, DETAIL A AND CONNECTION DETAIL, SEE "ABUTMENT DETAILS" SHEET.
2. FOR BEARING DETAILS SEE "DIAPHRAGM AND BEARING DETAILS" SHEET.
3. FINISH BRIDGE SEAT BEARING AREA (2" LARGER THAN BEARING PAD) HIGH AND RUBBED OR GROUND LEVEL TO ELEVATION SHOWN ±1/8". NO GROUTING ALLOWED.
4. FIGURES SHOWN IN PARENTHESIS ARE APPROXIMATE (FEET) BASED ON SURVEY INFORMATION.
5. REMOVE PARTIAL WINGWALL 1'-6 MIN. PROVIDE 6" MIN OF RIGID PLASTIC FOAM BETWEEN TOP OF EXISTING WINGWALL AND BOTTOM OF APPROACH SLAB.
6. ALIGN FRONT FACE OF ABUTMENT WALL WITH FRONT FACE OF EXISTING ABUTMENT WALL.

| NO. | DATE | BY | REMARKS |
|---|---|---|---|

REVISIONS

UTAH DEPARTMENT OF TRANSPORTATION
SALT LAKE CITY, UTAH
STRUCTURES DIVISION

URS

DESIGN PH 12/04 CHECK GTD 12/04
DRAWN DKH 12/04 CHECK PH 12/04
QUANT. CDT 12/04 CHECK CEL 12/04

APPROVAL RECOMM. DATE SENIOR DESIGN ENGR.
APPROVED FOR USE BY UDOT DATE UDOT BRIDGE ENGR.

I-15; CORRIDOR IN UTAH COUNTY
400 NORTH OVERPASS IN OREM
ABUTMENT #4 PLAN & ELEVATION

PROJECT NUMBER SP-15-6(52)241

UTAH
COUNTY

F-14W2
DRG. NO.

SHT. 7 OF 28

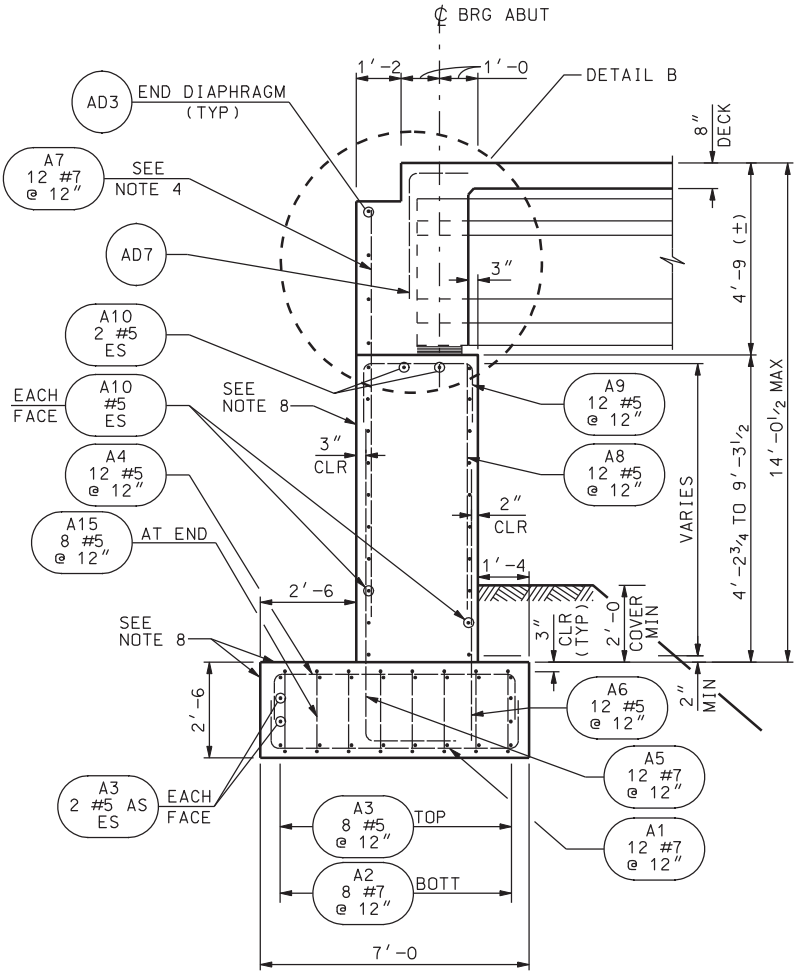


SECTION A-A

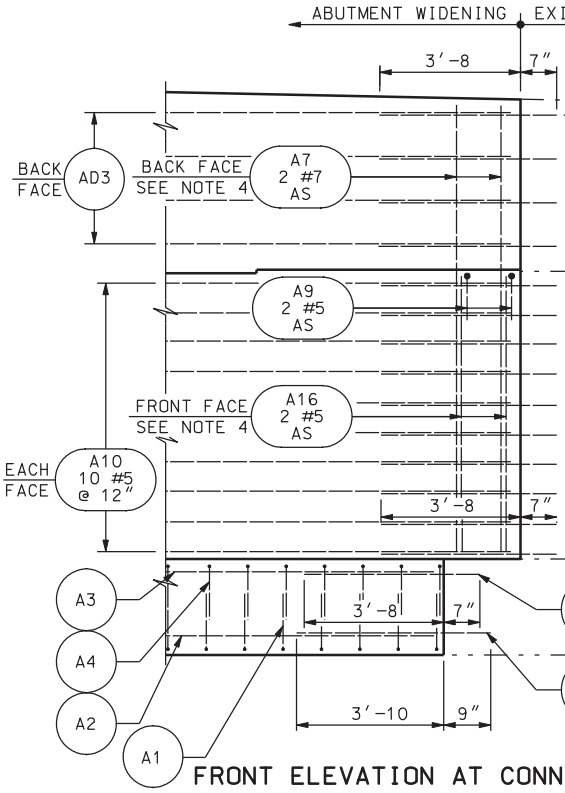


FRONT ELEVATION AT CONN

ALL BA
LOCATIONS

## NOTES

1. APPROVED EPOXY ANCHORAGE FOR REINFORCING STEEL
2. SEE "ABUTMENT #1 PLAN & ELEVATION" AND "ABUTME FOR LOCATION OF SECTIONS AND DETAILS ON THIS S
3. SPACING OF REINFORCING STEEL MAY BE (±). USE T
4. CUT REINFORCING BARS TO MAINTAIN 2" CLEAR BELO SEAT AT ABUTMENT.
5. FOR REQUIRED BLOCKOUT IN GIRDER, SEE "GIRDER D
6. PLACE TO MISS EXISTING REINFORCING.
7. PLACE AD8 BARS PRIOR TO AD5 BARS OR AD11 BARS
8. PLACE BUTYL RUBBER SHEET ON ABUTMENT CONCRETE BETWEEN NORTHBOUND AND SOUTHBOUND STRUCTURES, ON "ABUTMENT #4 PLAN & ELEVATION" SHEET.

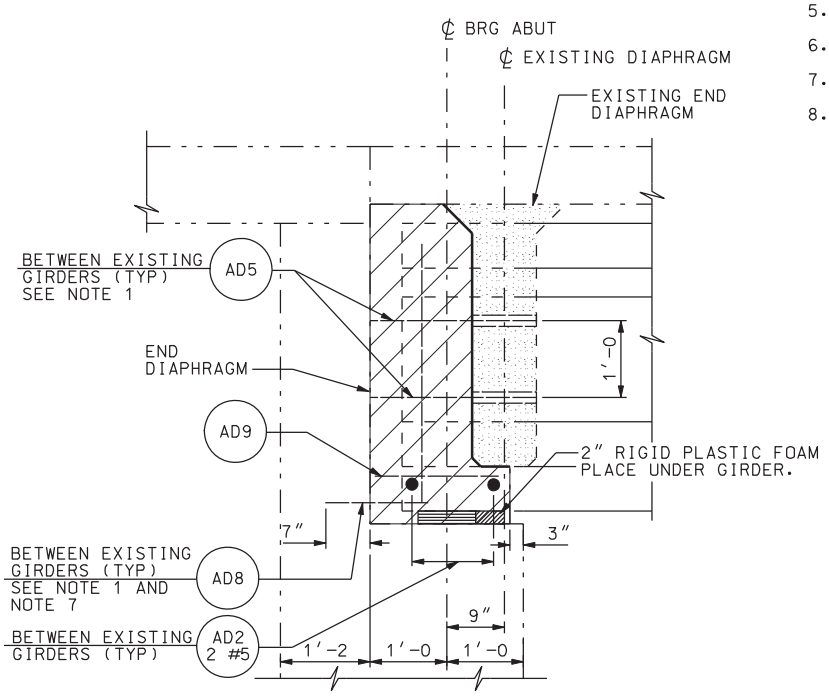


SECTION B-B

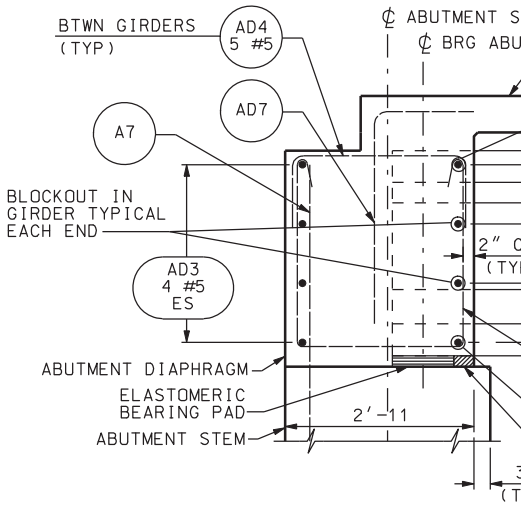


DETAIL B

DGN File: IP_PWPcdns1717\4433_F14_08.dgn

02-MAY-2005

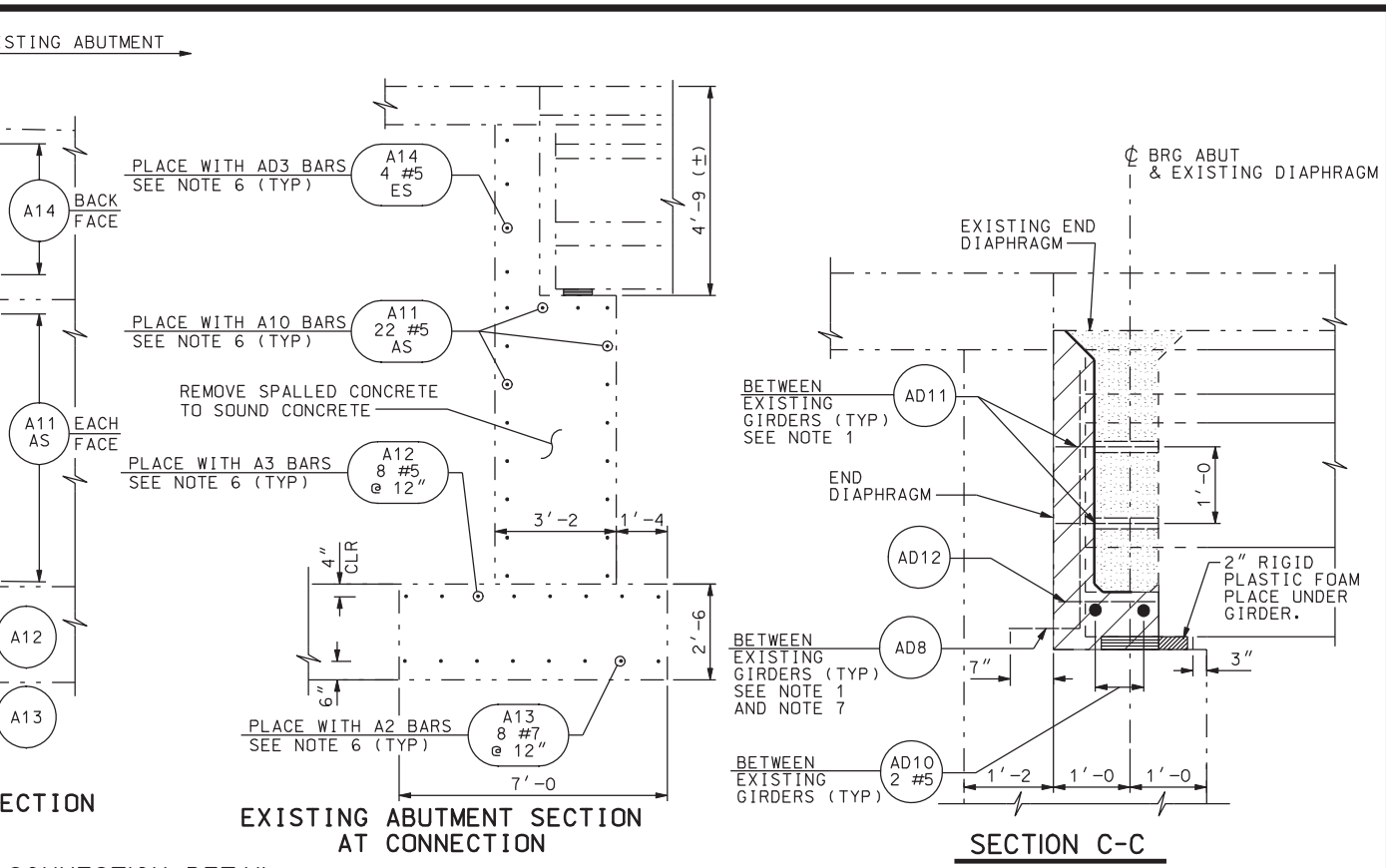


## CONNECTION DETAIL

ARS NOT SHOWN FOR CLARITY. BAR
AND CLEARANCES TO BE ADJUSTED FOR
BAR LAP AS REQUIRED.

L TO EXISTING ABUTMENT.

ENT #4 PLAN & ELEVATION″
SHEET.

THE NUMBER OF BARS SHOWN.

OW APPROACH SLAB SEAT OR ABUTMENT

DETAILS – SPANS 1 & 3″ SHEET.

.

SUFACES IN CONTACT WITH SOIL
SEE CONTRACTION JOINT DETAIL

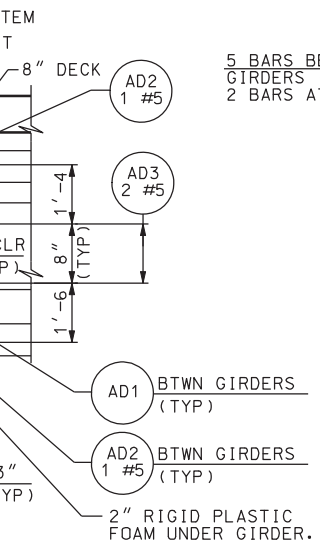


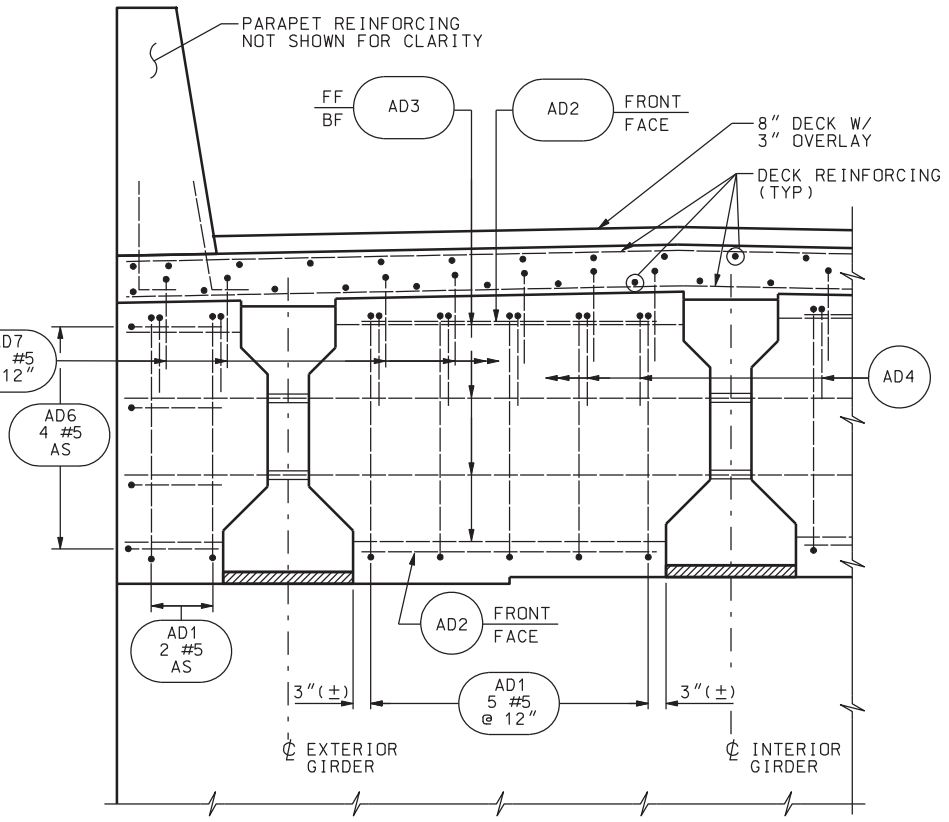


## ABUTMENT DIAPHRAGM DETAIL

(TYPICAL REINFORCING BETWEEN GIRDERS AT NEW END DIAPHRAGMS)

| NO. | DATE | BY | REMARKS |
|---|---|---|---|

REVISIONS

UTAH DEPARTMENT OF TRANSPORTATION
SALT LAKE CITY, UTAH
STRUCTURES DIVISION

URS

DESIGN PH 12/04 CHECK GTD 12/04 CHECK PH 12/04 CHECK CEL 12/04
DRAWN DKH 12/04 QUANT. CDT 12/04

APPROVAL RECOMM. DATE SENIOR DESIGN ENGR.
APPROVED FOR USE BY UDOT DATE UDOT BRIDGE ENGR.

I-15; CORRIDOR IN UTAH COUNTY
400 NORTH OVERPASS IN OREM
ABUTMENT DETAILS

PROJECT NUMBER SP-15-6(52)241

UTAH
COUNTY

F-14W2
DRG. NO.

SHT. 8 OF 28

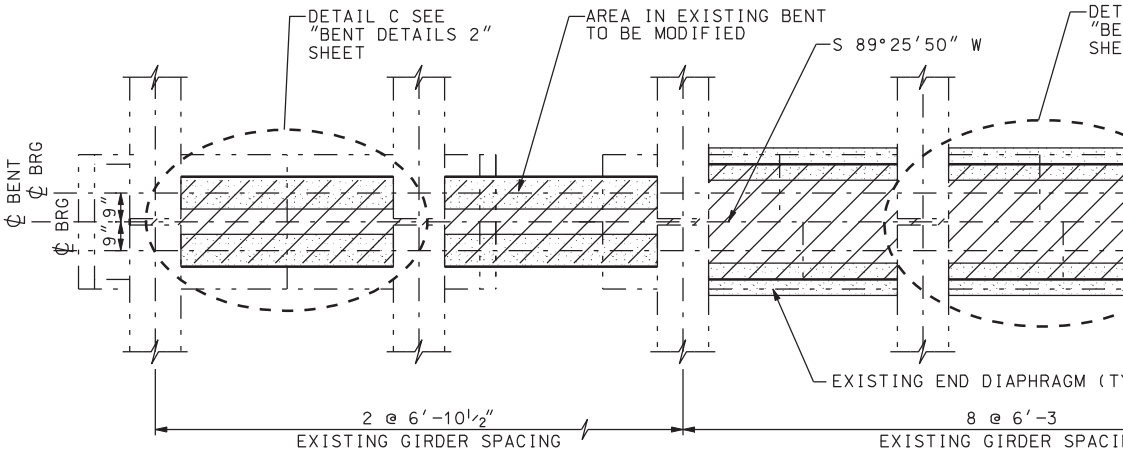


## PLAN

LOOKING UPSTA
(DECK NOT SHO

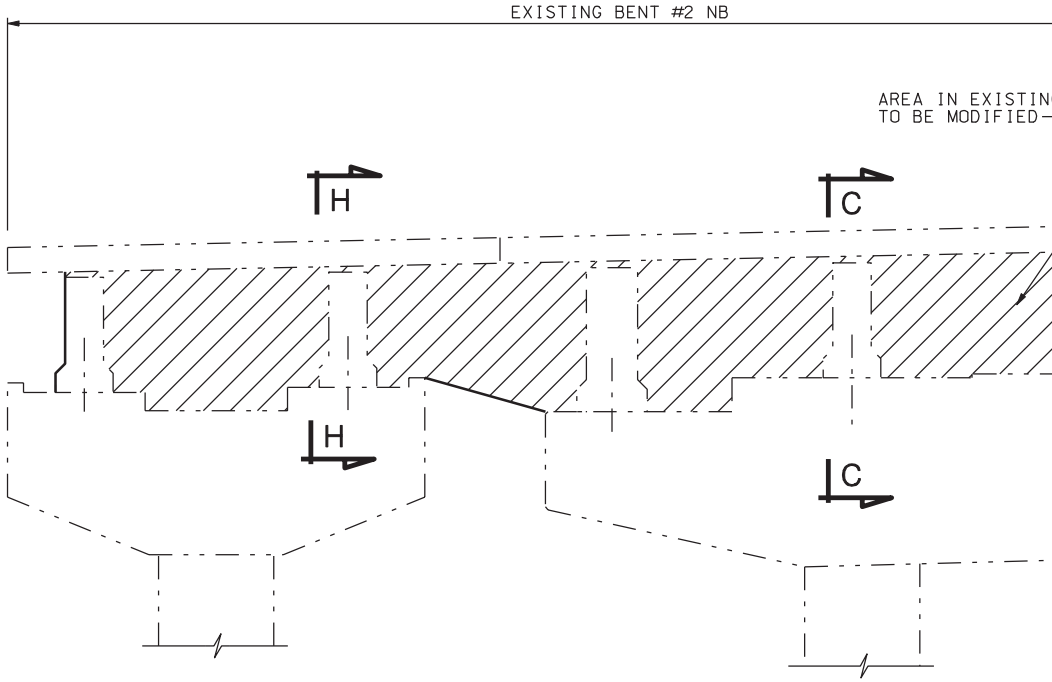


## ELEVATION

LOOKING UPSTATION
BENT #2 SHOWN; BENT #3
(PARAPET NOT SHOW

## CONCRETE QUANTITIES

| LOCATION | BENT #2 | BENT #3 | UNITS |
|---|---|---|---|
| FOOTING | 17.7 | 17.7 | CU YDS |
| COLUMNS | 7.8 | 7.5 | CU YDS |
| BENT CAP | 11.5 | 11.5 | CU YDS |
| DIAPHRAGM | 9.3 | 9.3 | CU YDS |
| MODIFIED DIAPHRAGM | 32.8 | 32.8 | CU YDS |
| TOTAL | 79.1 | 78.8 | CU YDS |

DGN File:IP_PWPcdns1717\4433_F14.09.dgn
02-MAY-2005

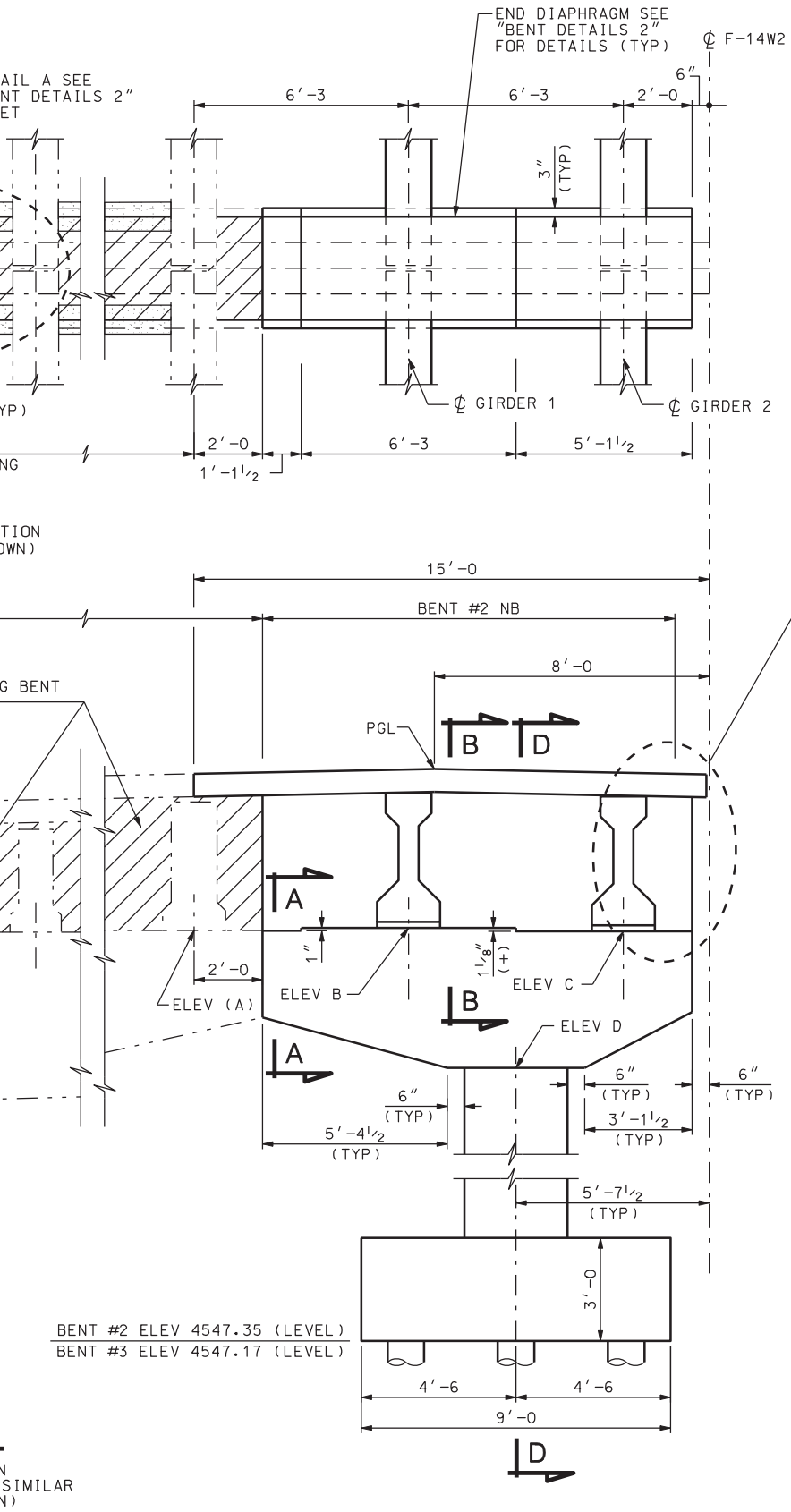


## NOTES

1. FOR SECTIONS A-A, B-B, C-C, G-G AND H-H, SEE "BENT DETAILS 1" AND "BENT DETAILS 2" SHEETS.
2. FOR SECTION D-D, SEE "BENT DETAILS 3" SHEET.
3. FIGURES SHOWN IN PARENTHESIS ARE APPROXIMATE TOP OF EXISTING BENT CAP ELEVATION (FEET) BASED ON SURVEY INFORMATION.
4. SEE "DIAPHRAGM & BEARING DETAILS" SHEET.
5. FINISH BRIDGE SEAT BEARING AREA (2" LARGER THAN BEARING PAD) HIGH AND RUBBED OR GROUND SMOOTH AND LEVEL. NO GROUTING ALLOWED.
6. ALIGN ℄ OF NEW BENT WITH ℄ OF EXISTING BENT. ALIGN COLUMNS AND ENSURE NEW BENT CAP FACE MATCHES EXISTING BENT CAP FACE.

BENT CAP ELEVATIONS

| LOCATION | ELEVATIONS | | | | | | | |
|---|---|---|---|---|---|---|---|---|
| | A | B | C | D | E | F | G | H |
| BENT #2 | 4572.34 | 4572.45 | 4572.35 | 4568.35 | 4572.34 | 4572.45 | 4572.35 | 4568.34 |
| BENT #3 | 4572.05 | 4572.14 | 4572.04 | 4568.04 | 4572.05 | 4572.14 | 4572.04 | 4568.04 |

| NO. | DATE | BY | REMARKS |
|---|---|---|---|
| | | | |

REVISIONS

UTAH DEPARTMENT OF TRANSPORTATION
SALT LAKE CITY, UTAH
STRUCTURES DIVISION

URS

DESIGN PH 12/04 CHECK GTD 12/04
DRAWN DKH 12/04 CHECK PH 12/04
QUANT. CDT 12/04 CHECK CEL 12/04

APPROVAL RECOMM. DATE SENIOR DESIGN ENGR.
APPROVED FOR USE BY UDOT DATE UDOT BRIDGE ENGR.

I-15; CORRIDOR IN UTAH COUNTY
400 NORTH OVERPASS IN OREM
BENT PLAN & ELEVATION NB

PROJECT NUMBER SP-15-6(52)241

UTAH
COUNTY

F-14W2
DRG. NO.

SHT. 9 OF 28

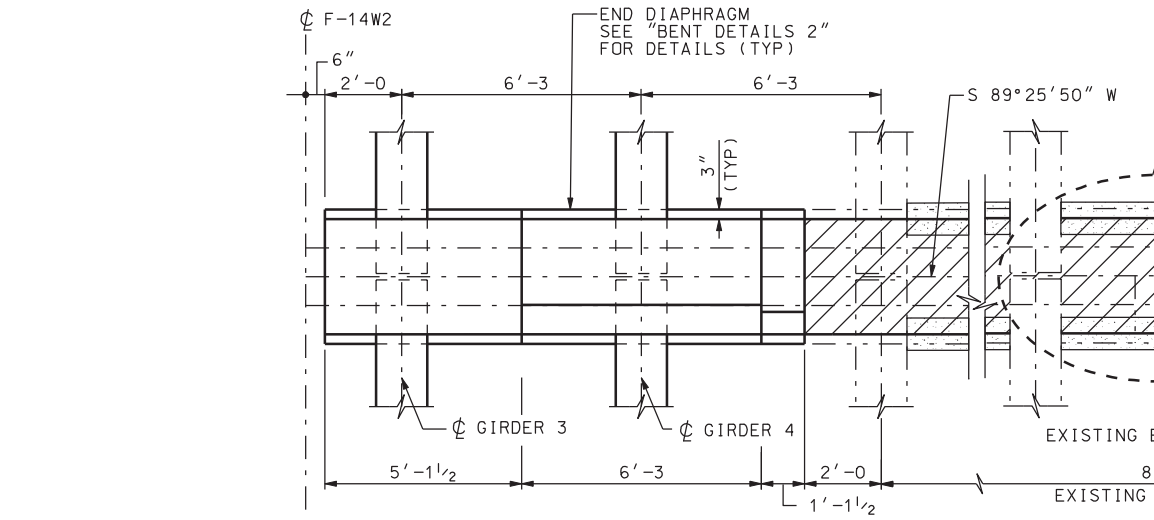


## PLAN

LOOKING UPSTA
(DECK NOT SH

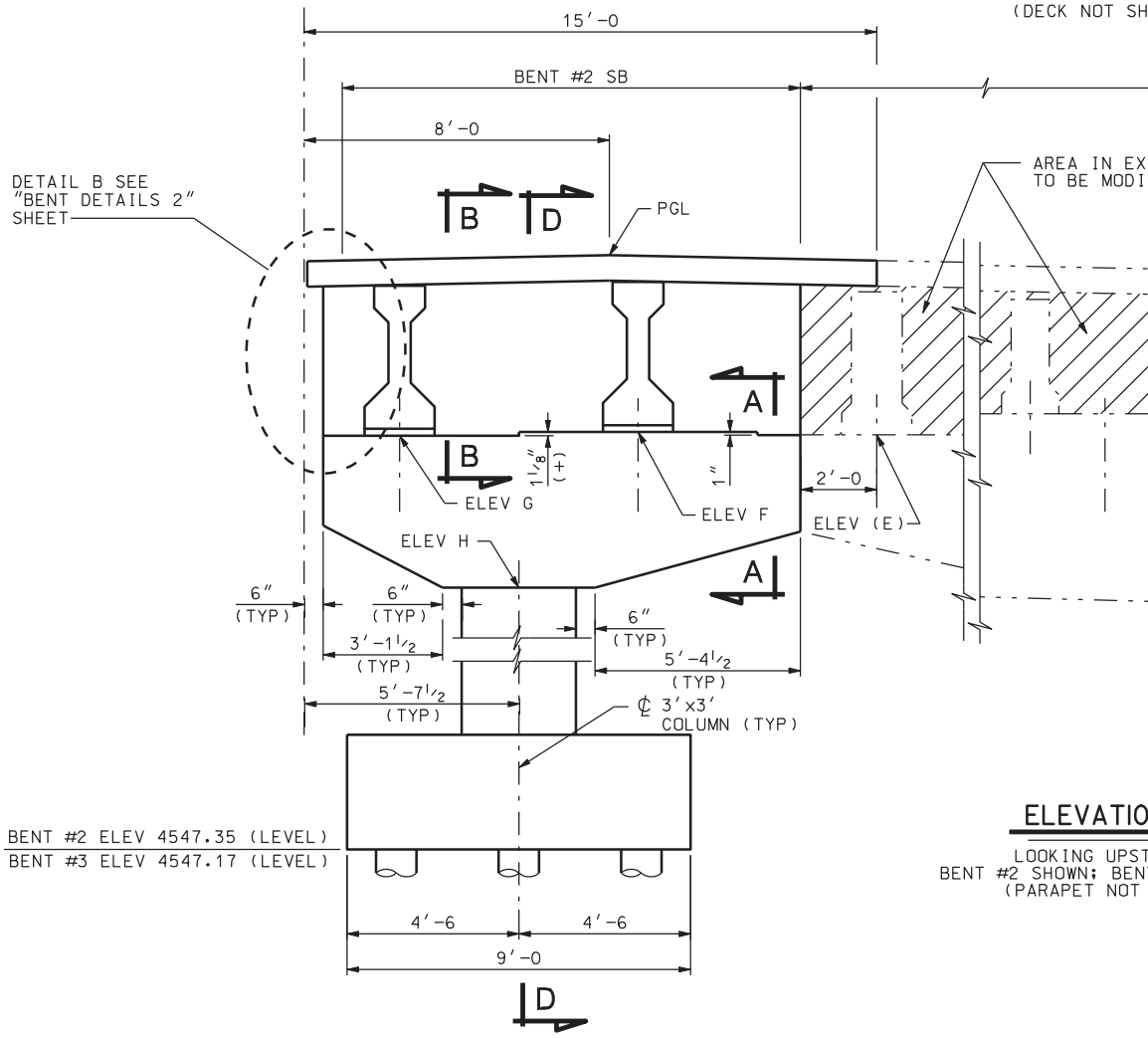


## ELEVATIO

LOOKING UPST
BENT #2 SHOWN; BEN
(PARAPET NOT

DGN File:IP_PWPcdns1717\4433_F14.10.dgn

02-MAY-2005

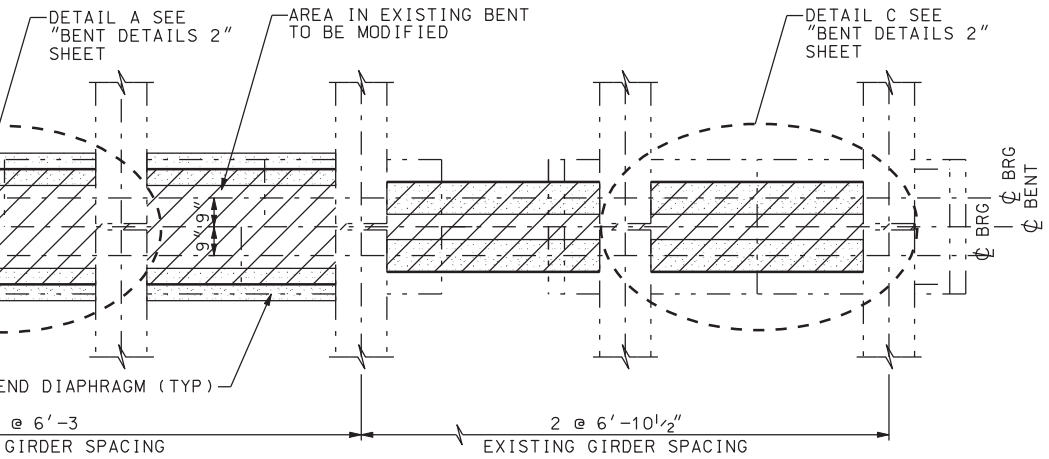


ATION
OWN)

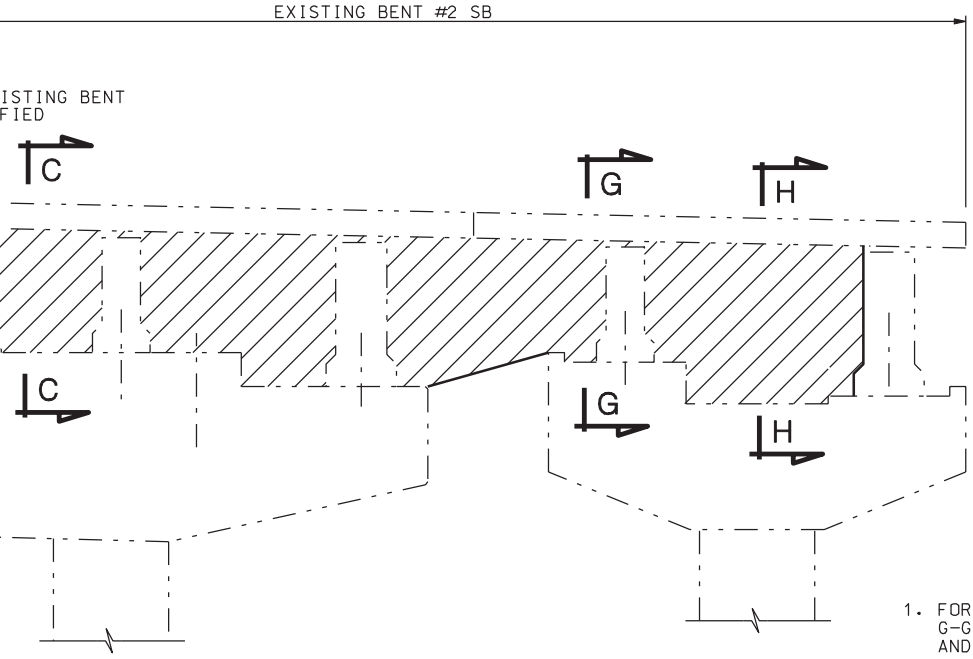


N

ATION
T #3 SIMILAR
SHOWN)

## NOTES

1. FOR SECTIONS A-A, B-B, C-C, G-G, AND H-H SEE "BENT DETAILS 1" AND "BENT DETAILS 2" SHEETS.
2. FOR SECTION D-D, SEE "BENT DETAILS 3" SHEET.
3. FIGURES SHOWN IN PARENTHESIS ARE APPROXIMATE TOP OF EXISTING BENT CAP ELEVATION (FEET) BASED ON SURVEY INFORMATION.
4. SEE "DIAPHRAGM & BEARING DETAILS" SHEET.
5. FINISH BRIDGE SEAT BEARING AREA (2" LARGER THAN BEARING PAD) HIGH AND RUBBED OR GROUND SMOOTH AND LEVEL. NO GROUTING ALLOWED.
6. ALIGN ℄ OF NEW BENT WITH ℄ OF EXISTING BENT. ALIGN COLUMNS AND ENSURE NEW BENT CAP FACE MATCHES EXISTING BENT CAP FACE.

BENT CAP ELEVATIONS

| LOCATION | ELEVATIONS | | | | | | | |
|---|---|---|---|---|---|---|---|---|
| | A | B | C | D | E | F | G | H |
| BENT #2 | 4572.34 | 4572.45 | 4572.35 | 4568.35 | 4572.34 | 4572.45 | 4572.35 | 4568.35 |
| BENT #3 | 4572.05 | 4572.14 | 4572.04 | 4568.04 | 4572.05 | 4572.14 | 4572.04 | 4568.04 |

| NO. | DATE | BY | REMARKS |
|---|---|---|---|
| | | | |

REVISIONS

UTAH DEPARTMENT OF TRANSPORTATION
SALT LAKE CITY, UTAH
STRUCTURES DIVISION

URS

DESIGN PH 12/04 CHECK GTD 12/04
DRAWN DKH 12/04 CHECK PH 12/04
QUANT. CDT 12/04 CHECK CEL 12/04

APPROVAL RECOMM. DATE SENIOR DESIGN ENGR.
APPROVED FOR USE BY UDOT DATE UDOT BRIDGE ENGR.

I-15; CORRIDOR IN UTAH COUNTY
400 NORTH OVERPASS IN OREM
BENT PLAN & ELEVATION SB

PROJECT NUMBER SP-15-6(52)241

UTAH
COUNTY

F-14W2
DRG. NO.

SHT. 10 OF 28

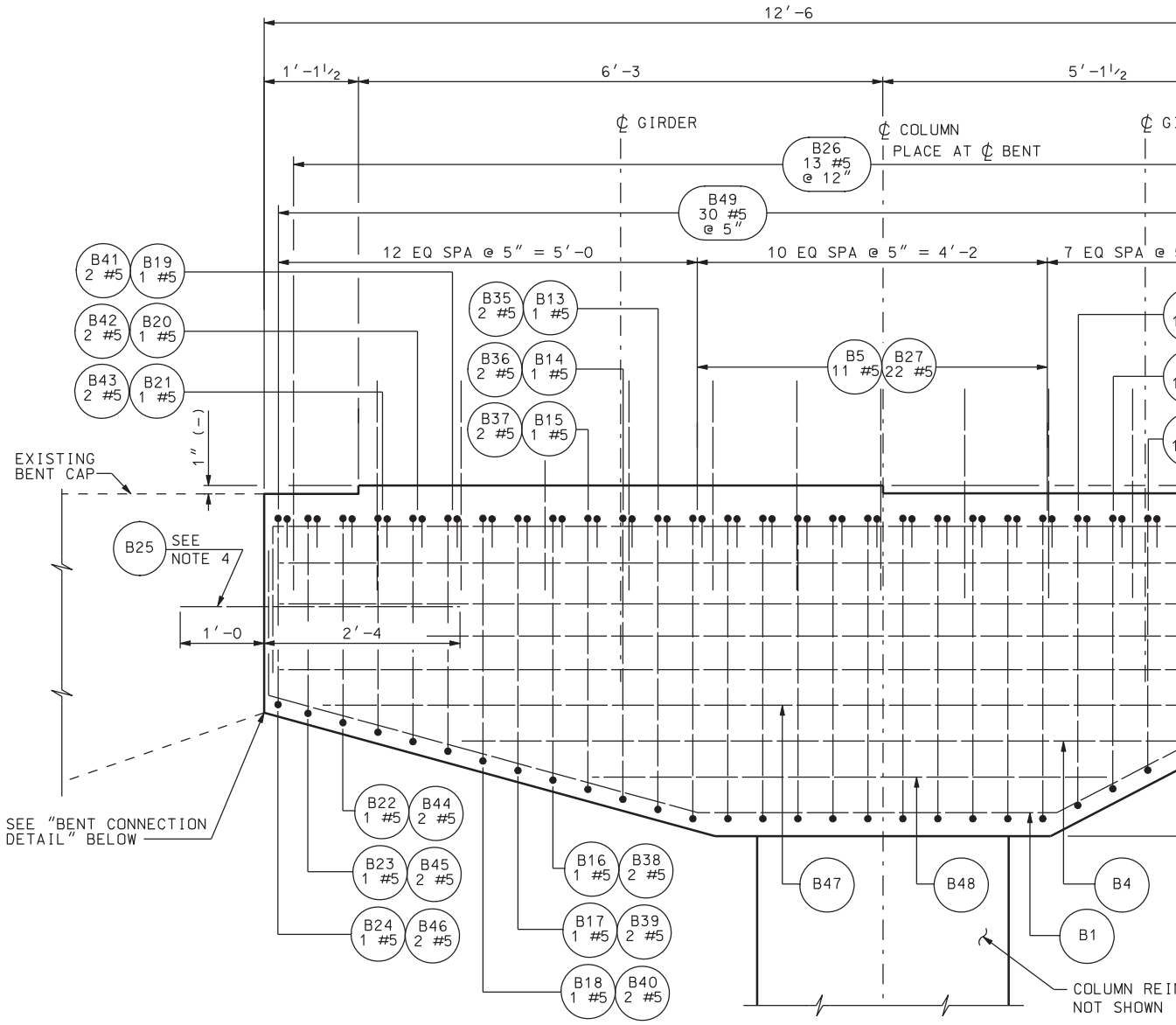


## BENT CAP DETAIL

(NB SHOWN, SB SIMILAR)

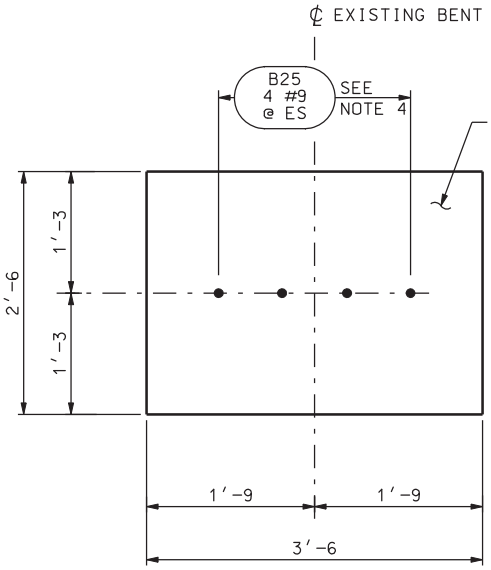


## BENT CONNECTION DETAIL

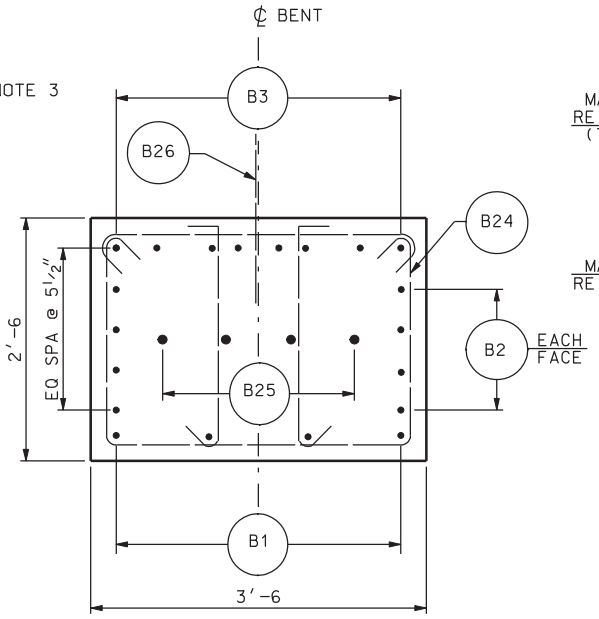


## SECTION A-A

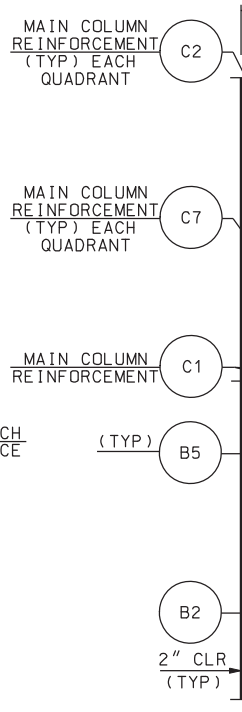


DGN File:IP_PWPcdms1717\4433_F14.11.dgn

02-MAY-2005

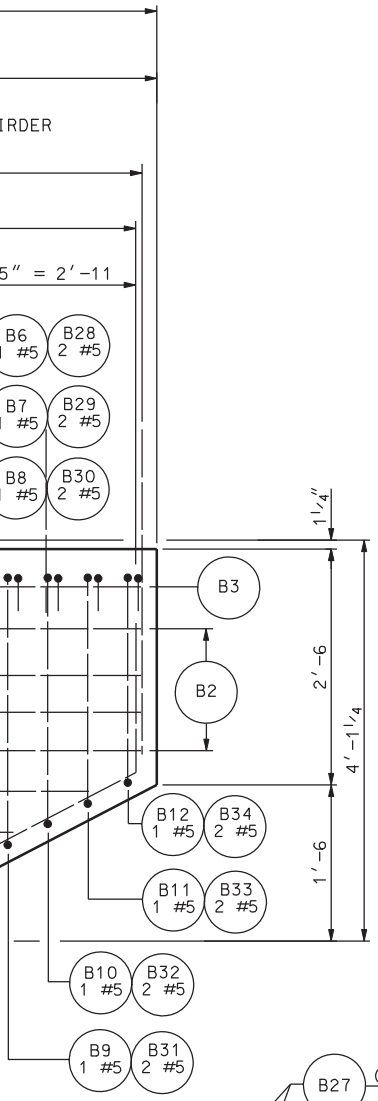


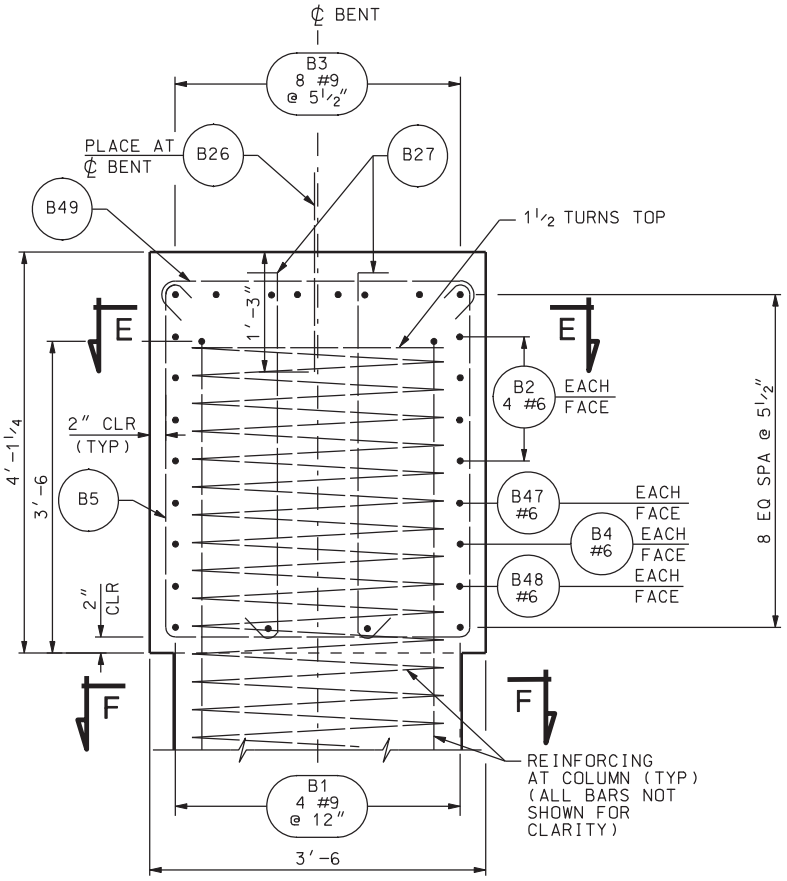


## BENT CAP DETAIL @ ℄ COLUMN

(NB SHOWN, SB SIMILAR)

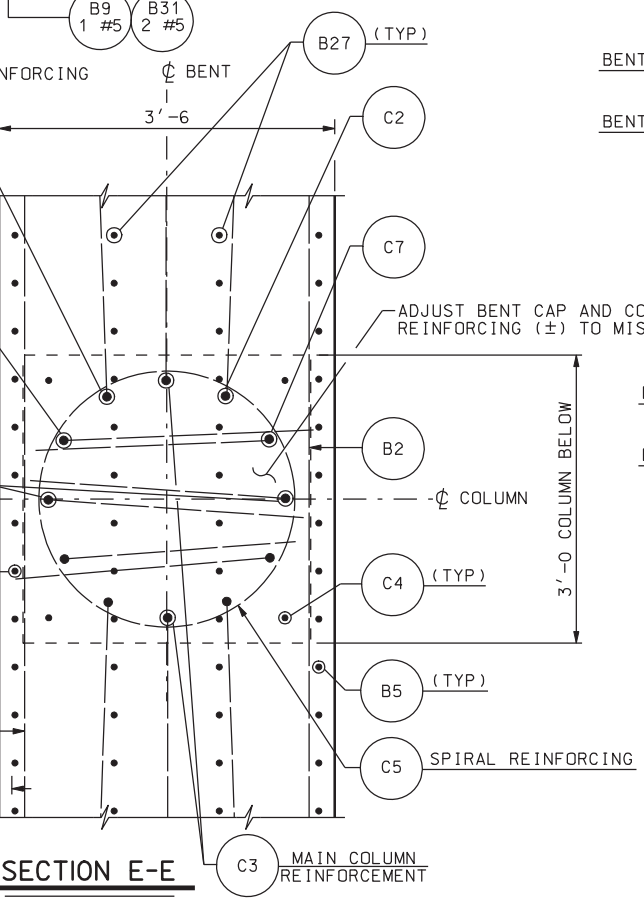


## SECTION E-E

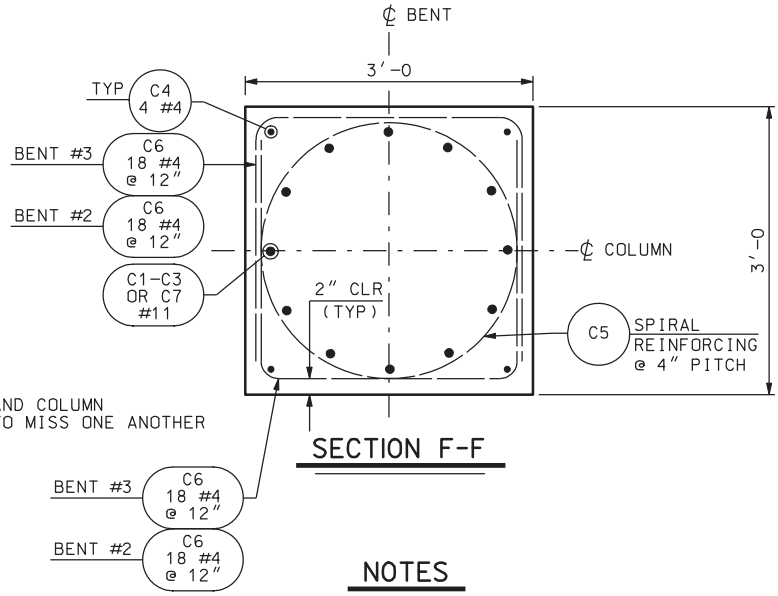


## SECTION F-F

## NOTES

1. PROVIDE 2″ MIN COVER TO REINFORCING STEEL UNLESS NOTED OTHERWISE.
2. SEE "BENT PLAN AND ELEVATION" SHEET FOR LOCATION OF SECTION A-A.
3. FACE OF EXISTING TO BE ROUGHENED BEFORE DOWELS ARE PLACED AND FORMS ARE SET FOR NEW CONSTRUCTION. REMOVE SPALLED CONCRETE TO SOUND CONCRETE.
4. APPROVED EPOXY ANCHORAGE FOR REINFORCING STEEL TO EXISTING BENT CAP. PLACE TO MISS EXISTING REINFORCING STEEL.
5. SPACING OF REINFORCING STEEL MAY BE ( ). USE THE NUMBER OF BARS SHOWN. ±
6. ALIGN NEW BENT CAP FACE WITH EXISTING BENT CAP FACE.

| NO. | DATE | BY | REMARKS |
|---|---|---|---|
| | | | |

REVISIONS

UTAH DEPARTMENT OF TRANSPORTATION
SALT LAKE CITY, UTAH
STRUCTURES DIVISION

URS

DESIGN PH 12/04 CHECK GTD 12/04
DRAWN DKH 12/04 CHECK PH 12/04
QUANT. CDT 12/04 CHECK CEL 12/04

APPROVAL RECOMM. DATE SENIOR DESIGN ENGR.
APPROVED FOR USE BY UDOT DATE UDOT BRIDGE ENGR.

I-15; CORRIDOR IN UTAH COUNTY
400 NORTH OVERPASS IN OREM
BENT DETAILS 1

PROJECT NUMBER SP-15-6(52)241

UTAH
COUNTY

F-14W2
DRG. NO.

SHT. 11 OF 28

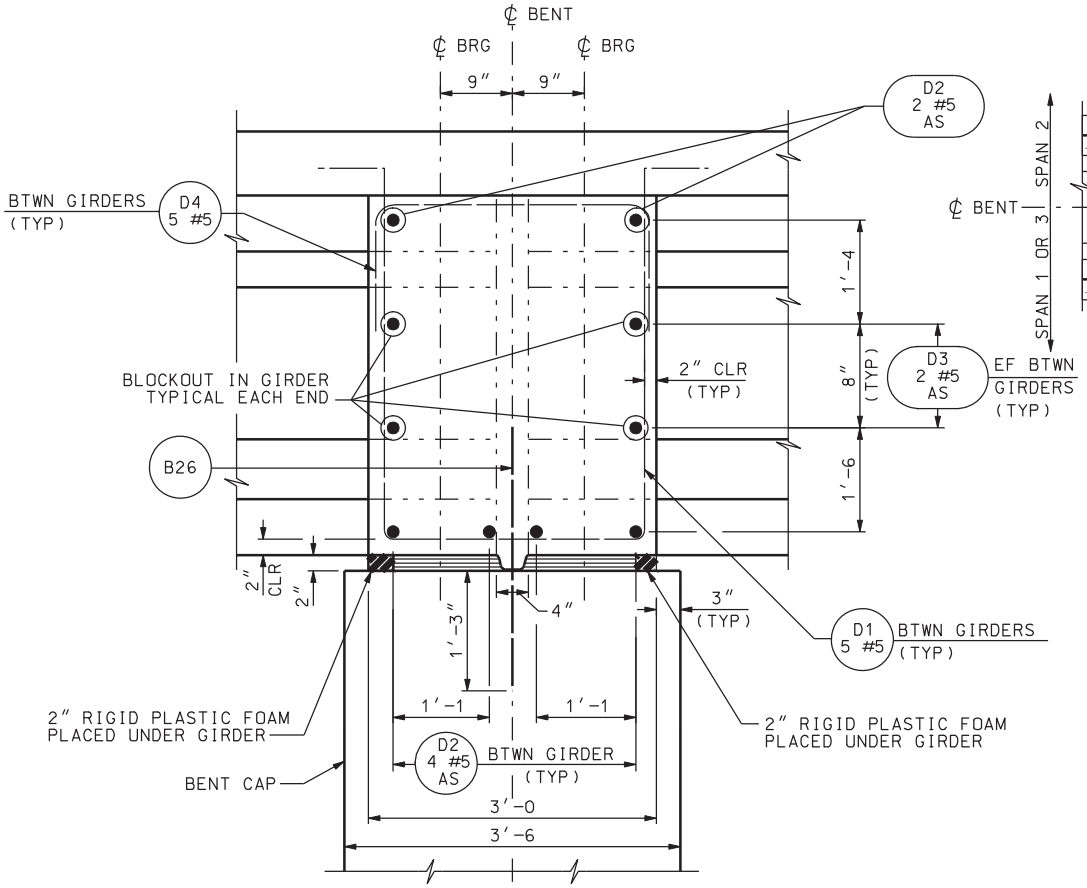


SECTION B-B (END DIAPHRAGM REINFORCEMENT)

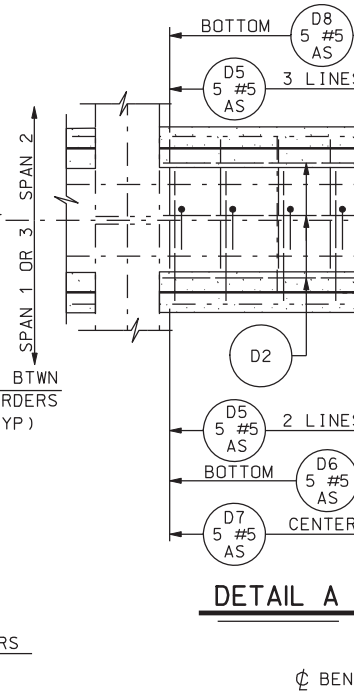


DETAIL A

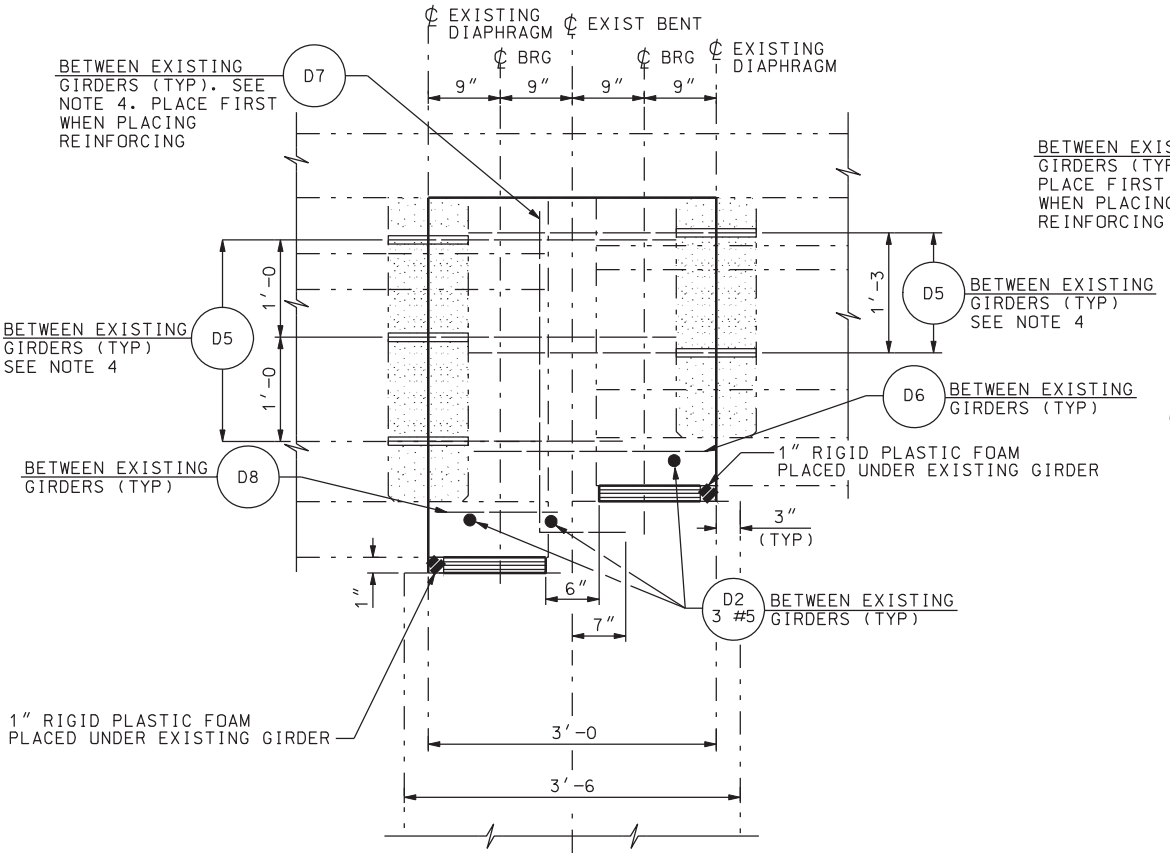


SECTION C-C (END DIAPHRAGM REINFORCEMENT)

SECTION SHOWN FOR BENT #2; BENT #3 OPPOSITE

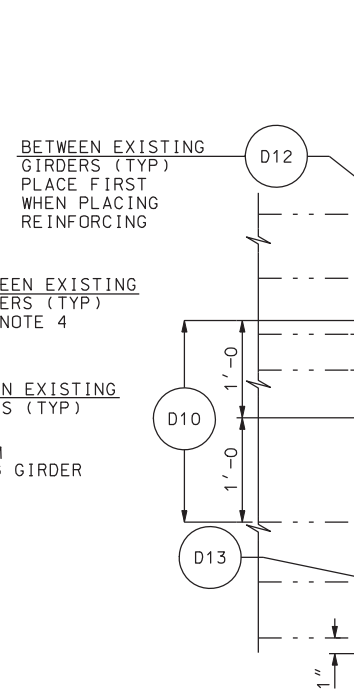


SECTION G-

SECTION

DGN File:IP_PWPcdms1717\4433_F14.12.dgn

02-MAY-2005

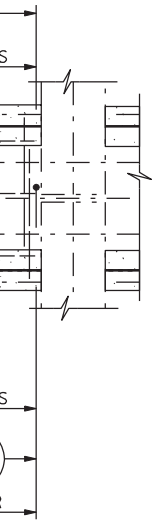

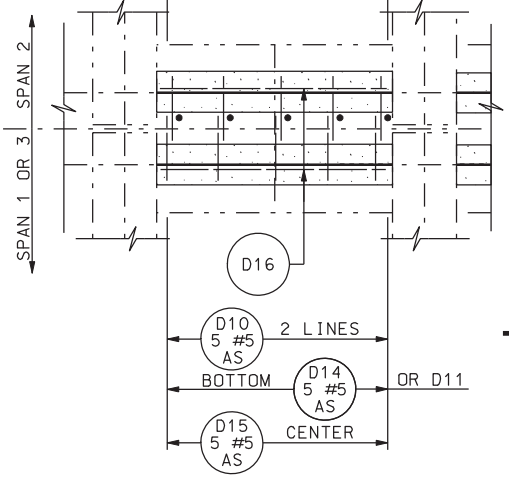


## DETAIL C

DESCRIBES NB AND SB TWO EXTERIOR SPANS AT EXISTING BENT

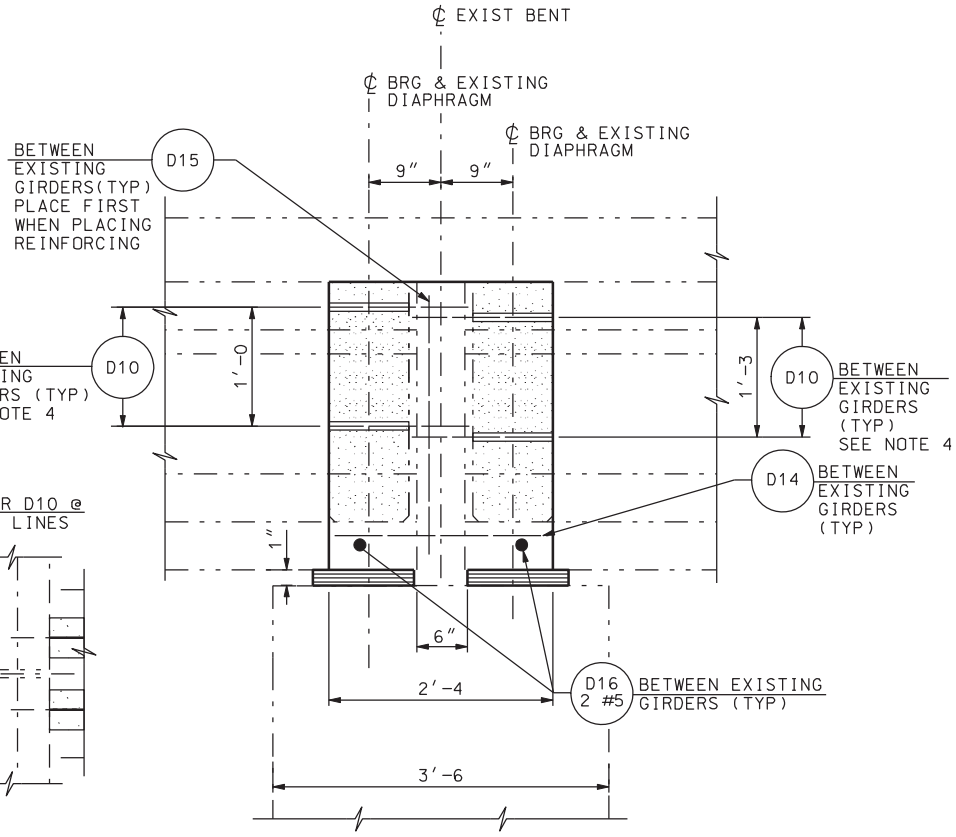


## SECTION H-H (END DIAPHRAGM REINFORCEMENT)

SECTION SHOWN FOR BENT #2; BENT #3 OPPOSITE

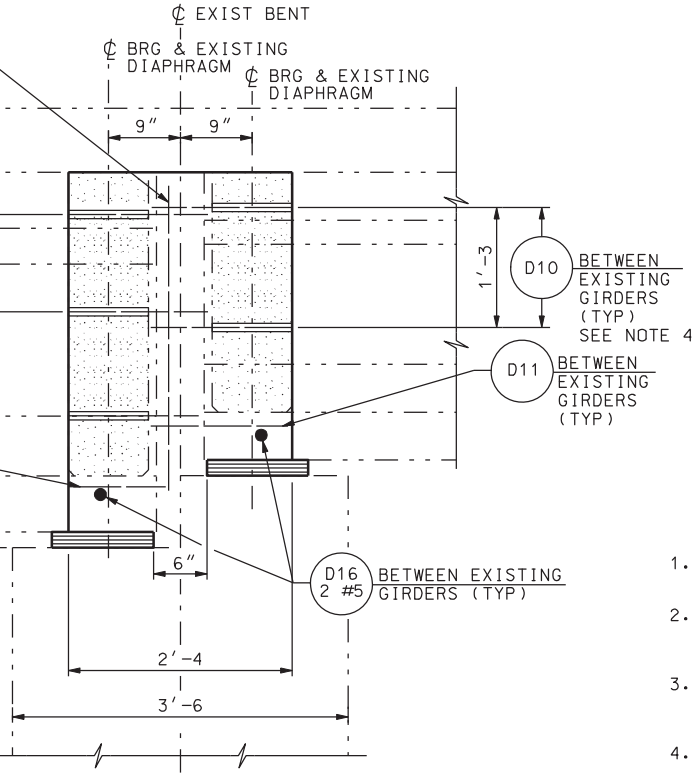


## -G (END DIAPHRAGM REINFORCEMENT)

N SHOWN FOR BENT #2; BENT #3 OPPOSITE

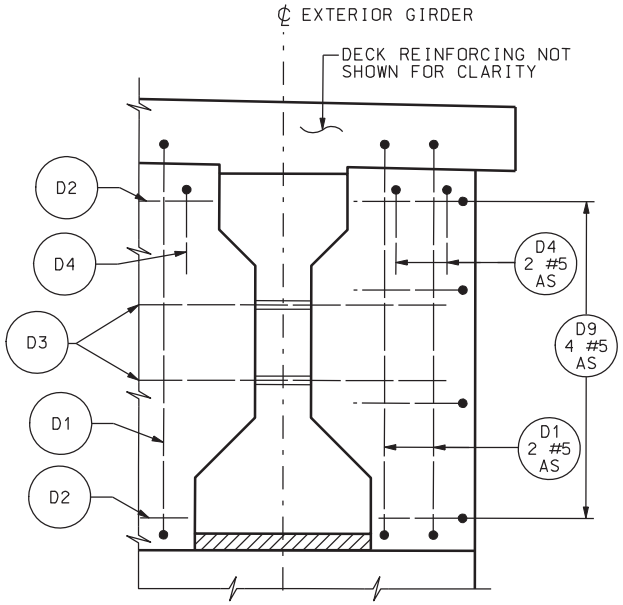


## DETAIL B

## NOTES

1. PROVIDE 2″ MIN COVER TO REINFORCING STEEL UNLESS NOTED OTHERWISE.
2. SEE "BENT PLAN AND ELEVATION" FOR LOCATIONS OF SECTIONS B-B, C-C, G-G, H-H, AND DETAIL A, DETAIL B, AND DETAIL C.
3. FOR REQUIRED BLOCKOUT IN GIRDER SEE "GIRDER DETAILS - SPANS 1 & 3" AND "GIRDER DETAILS - SPAN 2" SHEETS.
4. APPROVED EPOXY ANCHORAGE REINFORCING STEEL TO EXISTING CONCRETE.
5. SPACING OF REINFORCING STEEL MAY BE (±). USE THE NUMBER OF BARS SHOWN.

| NO. | DATE | BY | REMARKS |
|---|---|---|---|
| | | | |

REVISIONS

UTAH DEPARTMENT OF TRANSPORTATION
SALT LAKE CITY, UTAH
STRUCTURES DIVISION

URS

DESIGN PH 12/04 CHECK GTD 12/04 CHECK PH 12/04 CHECK CEL 12/04
DRAWN DKH 12/04 QUANT. CDT 12/04

APPROVAL RECOMM. DATE SENIOR DESIGN ENGR.
APPROVED FOR USE BY UDOT DATE UDOT BRIDGE ENGR.

I-15; CORRIDOR IN UTAH COUNTY
400 NORTH OVERPASS IN OREM
BENT DETAILS 2
PROJECT NUMBER SP-15-6(52)241

UTAH
COUNTY

F-14W2
DRG. NO.

SHT. 12 OF 28

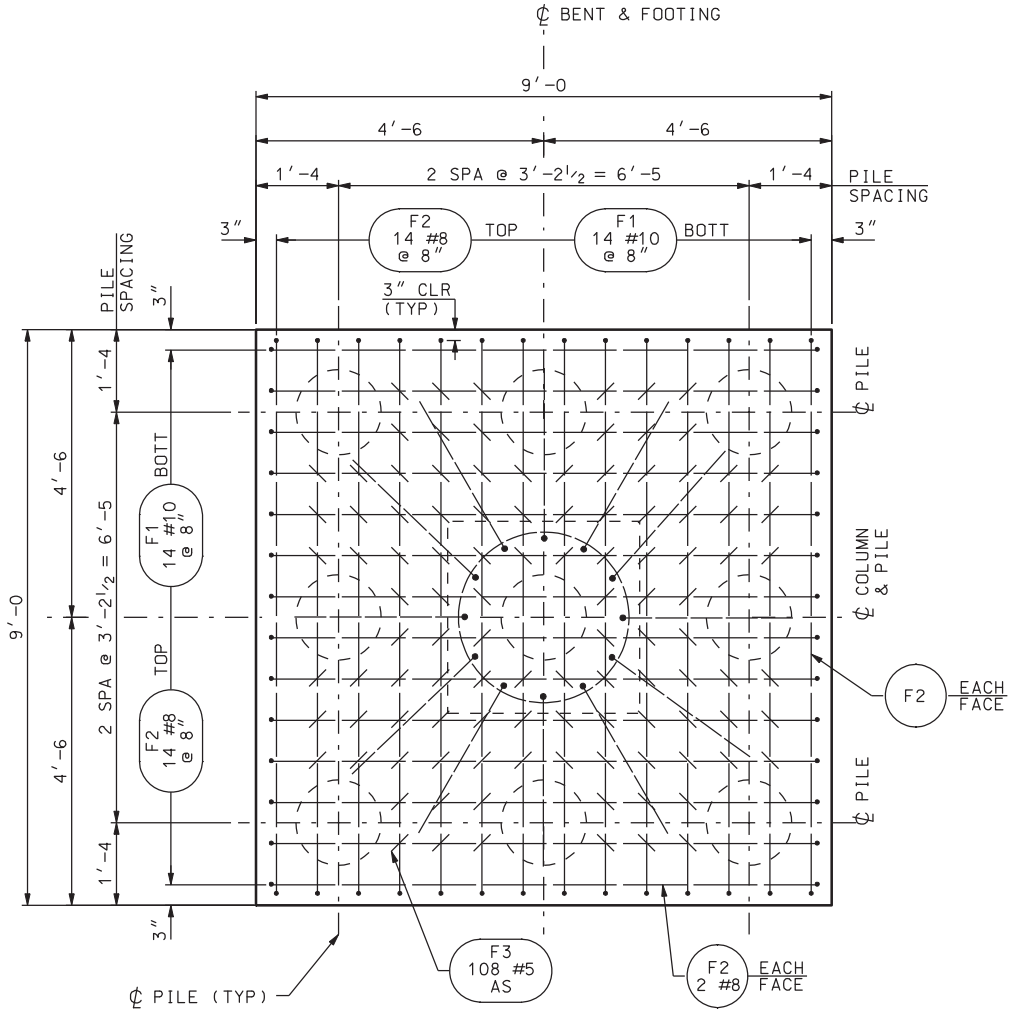


## PLAN

## NOTES

1. SEE "BENT PLAN & ELEVATIO
   FOR SECTION D-D.
2. PILE REINFORCING NOT SHOW
   FOR CLARITY.

DGN File:IP_PWPcdms1717\4433_F14.13.dgn
02-MAY-2005

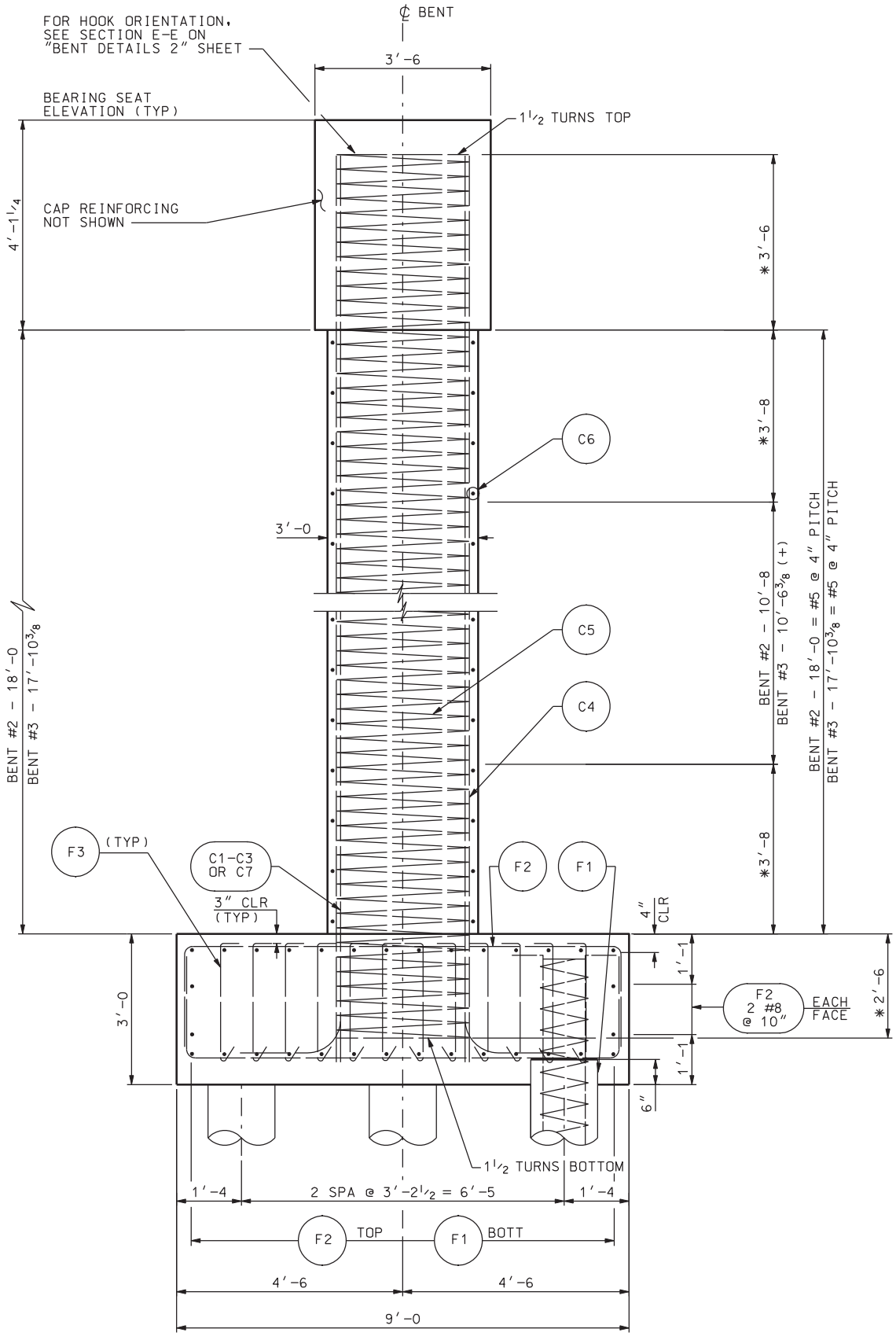


## SECTION D-D

AT COLUMNS

* LAP SPLICE OR SPIRAL SPLICE NOT ALLOWED

| NO. | DATE | BY | REMARKS |
|---|---|---|---|
| | | | |

REVISIONS

UTAH DEPARTMENT OF TRANSPORTATION
SALT LAKE CITY, UTAH
STRUCTURES DIVISION

URS

DESIGN PH 12/04 CHECK GTD 12/04
DRAWN DKH 12/04 CHECK PH 12/04
QUANT. CDT 12/04 CHECK CEL 12/04

APPROVAL RECOMM. DATE SENIOR DESIGN ENGR.
APPROVED FOR USE BY UDOT DATE UDOT BRIDGE ENGR.

I-15; CORRIDOR IN UTAH COUNTY
400 NORTH OVERPASS IN OREM

BENT DETAILS 3

PROJECT NUMBER SP-15-6(52)241

UTAH
COUNTY

F-14W2
DRG. NO.

SHT. 13 OF 28

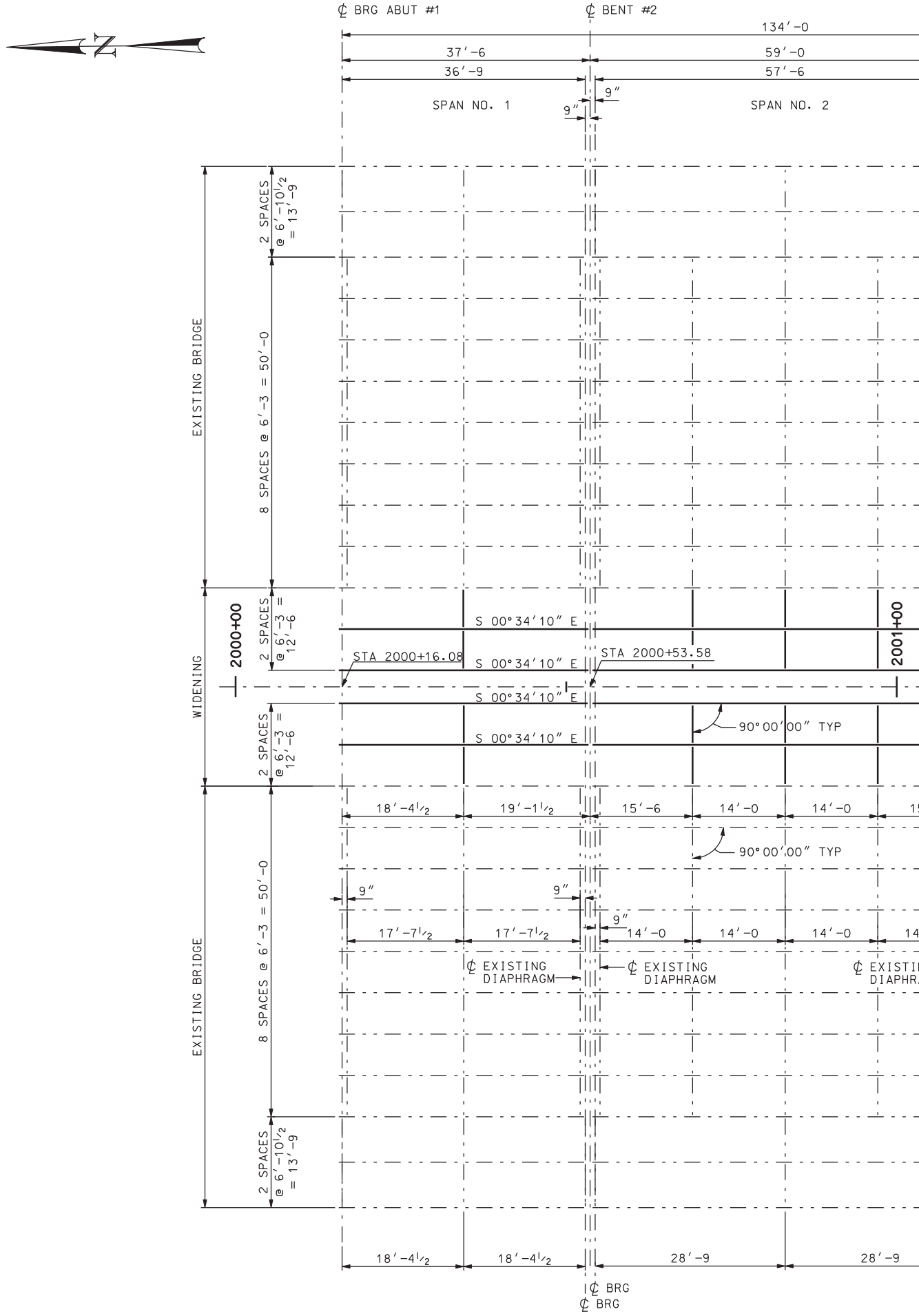


FRAMING PLAN

DGN File:IP_PWPcdns1717\4433_F14.14.dgn

02-MAY-2005

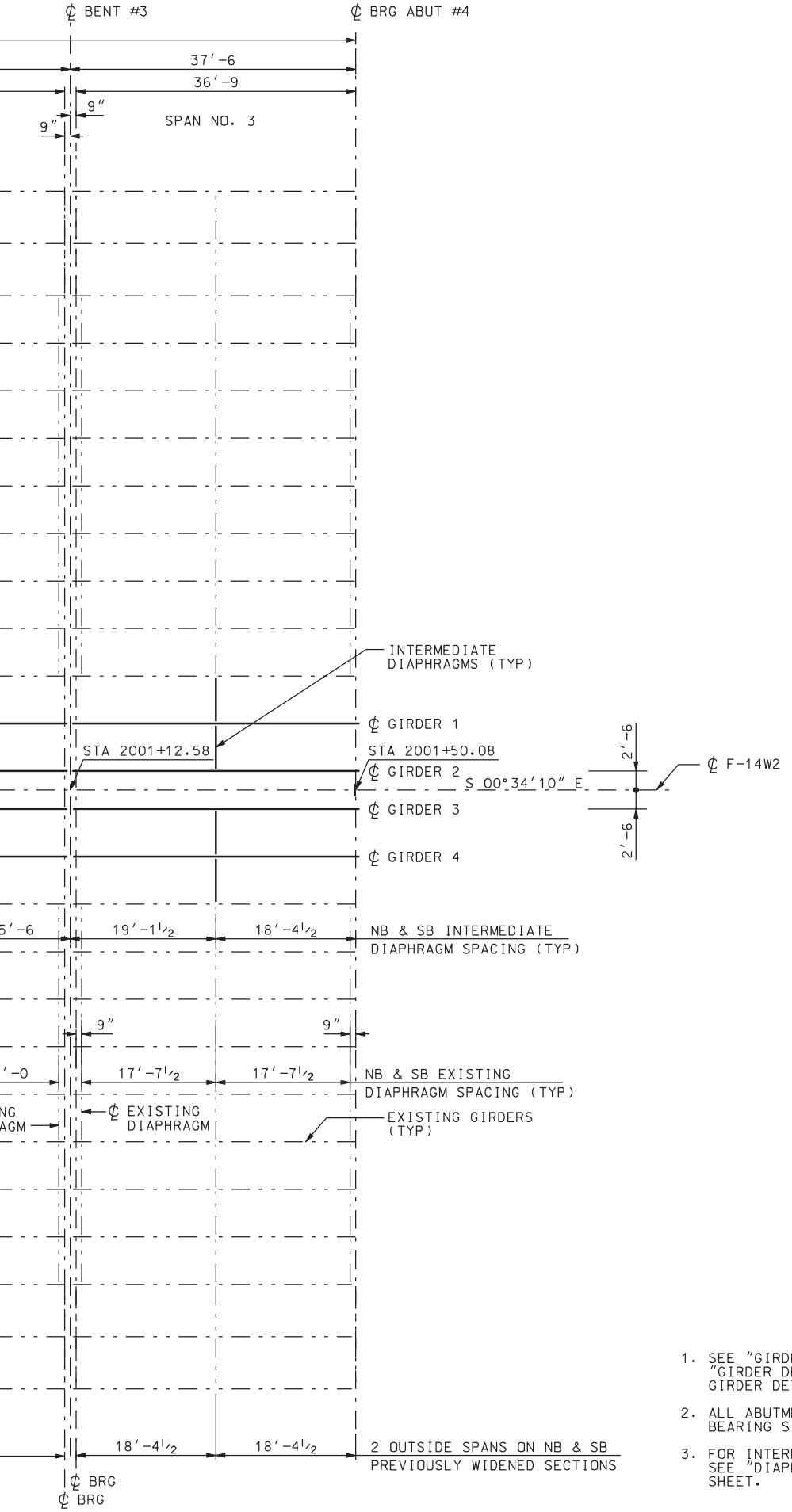


## NOTES

1. SEE "GIRDER DETAILS - SPAN 1 & 3" AND "GIRDER DETAILS - SPAN 2" SHEETS FOR GIRDER DETAILS.
2. ALL ABUTMENTS AND BENTS ARE ON A BEARING S 89°25′50 W.
3. FOR INTERMEDIATE DIAPHRAGM DETAILS SEE "DIAPHRAGM & BEARING DETAILS" SHEET.

| NO. | DATE | BY | REMARKS |
|---|---|---|---|
| | | | |

REVISIONS

UTAH DEPARTMENT OF TRANSPORTATION
SALT LAKE CITY, UTAH
STRUCTURES DIVISION

URS

DESIGN PH 12/04 CHECK GTD 12/04
DRAWN DKH 12/04 CHECK PH 12/04
QUANT. CDT 12/04 CHECK CEL 12/04

APPROVAL RECOMM. DATE SENIOR DESIGN ENGR.
APPROVED FOR USE BY UDOT DATE UDOT BRIDGE ENGR.

I-15; CORRIDOR IN UTAH COUNTY
400 NORTH OVERPASS IN OREM
FRAMING PLAN
PROJECT NUMBER SP-15-6(52)241

UTAH
COUNTY

F-14W2
DRG. NO.

SHT. 14 OF 28

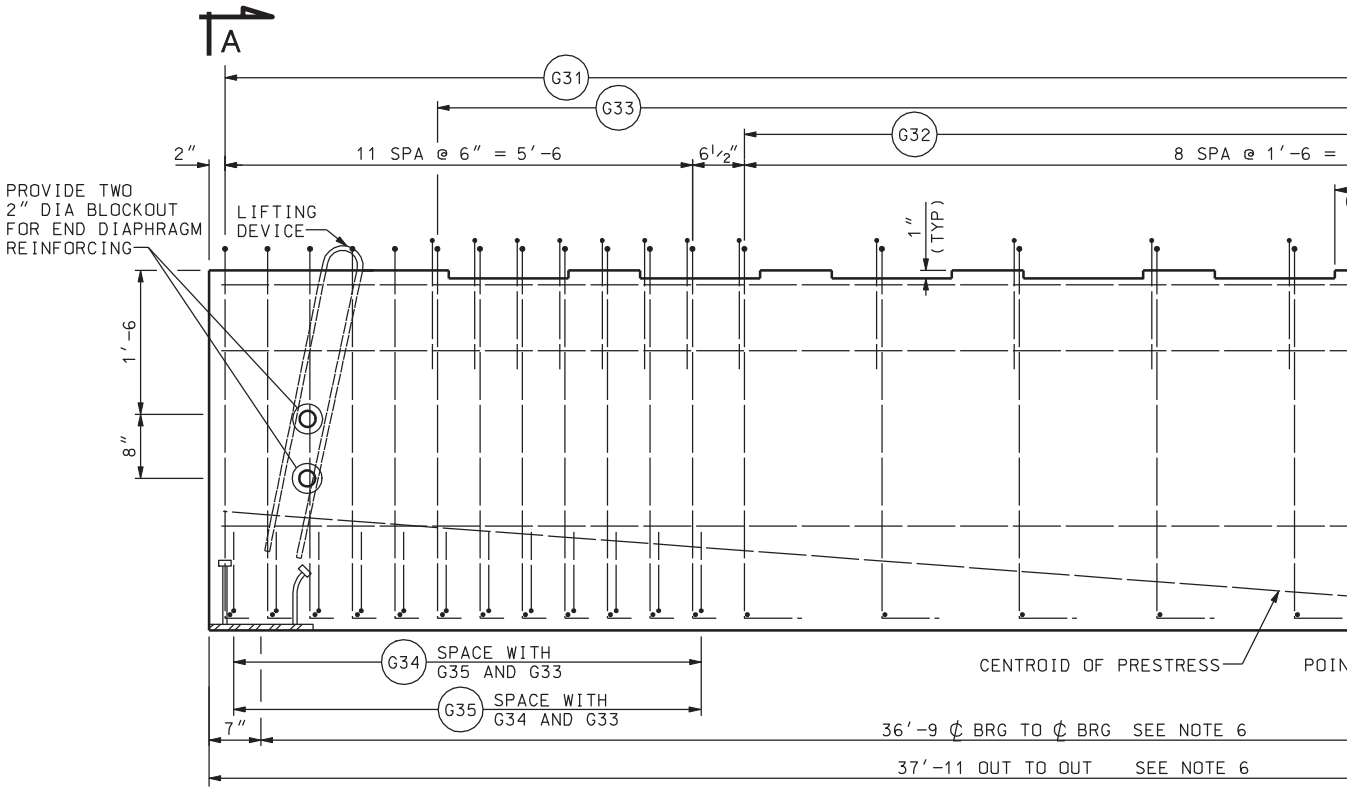


PARTIAL ELEVATION

(SPANS 1 & 3; GIRDERS 1 – 4)

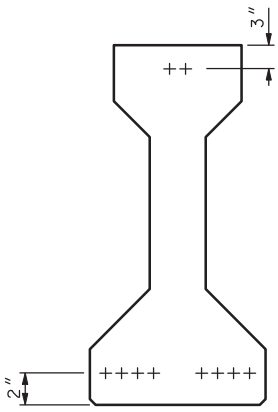


STRAND PATTERN

(STRAND PATTERN AT ENDS)
NO. OF STRAIGHT STRANDS = 8
NO. OF DRAPED STRANDS = 2

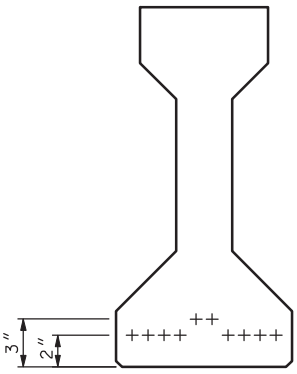


STRAND PATTERN

(STRAND PATTERN AT CENTER)

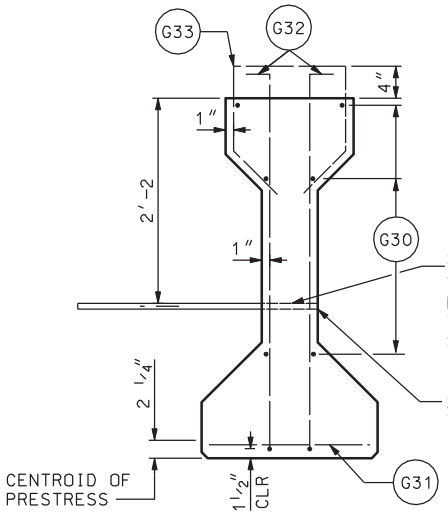


SECTION B-B

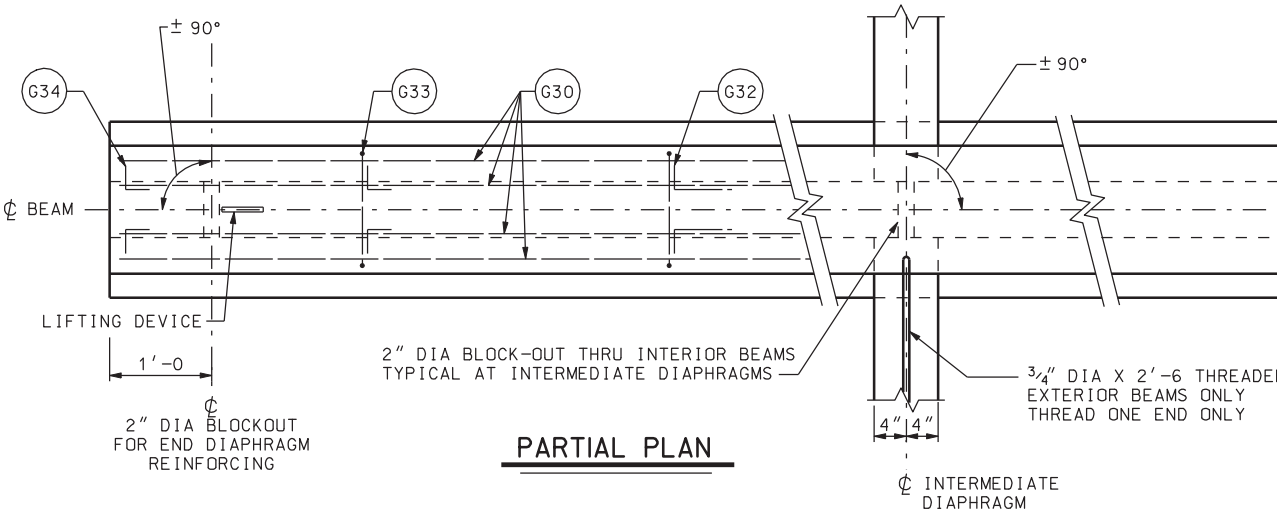


PARTIAL PLAN

DGN File: IP_PWPcdnsl717\4433_F14.15.dgn

02-MAY-2005

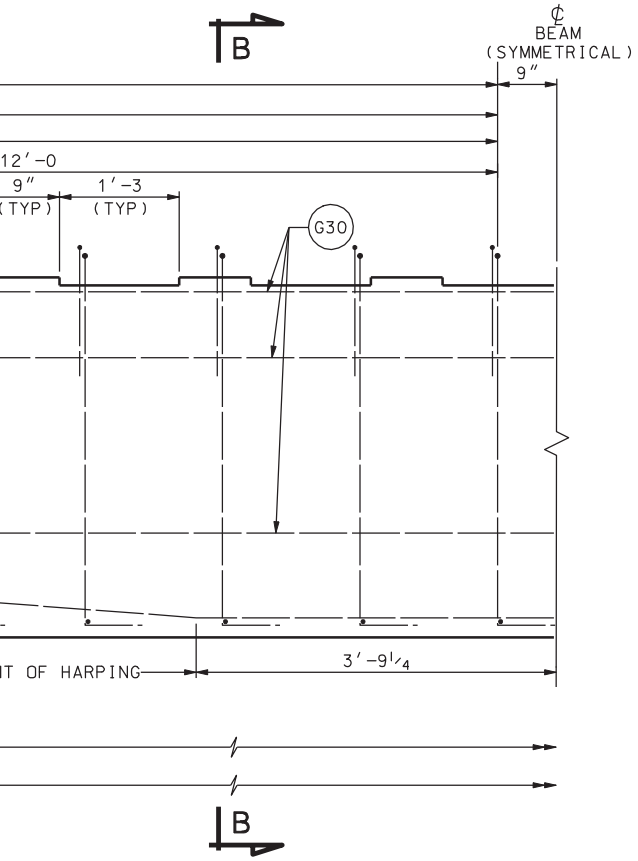


## REINFORCING STEEL SCHEDULE

| MARK | SIZE NO. | LENGTH | NO. REQ'D PER GIRDER | SKETCH |
|---|---|---|---|---|
| * G30 | 5 | 37′-7 | 6 | |
| G31 | 4 | 1′-6 | 42 | |
| G32 | 5 | 5′-1 | 36 | X Y 10″ 3″ Z 4′-0 |
| G33 | 4 | 4′-4 | 32 | 10″ 9″ 1′-2 1 1 |
| G34 | 5 | 4′-6 | 48 | X Y 3″ 3″ Z 4′-0 |
| G35 | 4 | 4′-8 | 24 | 5″ 7″ 7″ 1′-8 1 1 |

* LAP G30 BARS 3′-3″ MIN. AS NECESSARY

## NOTES

1. UNLESS OTHERWISE SHOWN, ALL DIMENSIONS ARE OUT TO OUT OF BARS.
2. PLACE BAR G31 IMMEDIATELY ABOVE LOWER ROW OF PRESTRESSING STRANDS.
3. USE ½″ DIAMETER SEVEN-WIRE STRESS RELIEVED PRESTRESSING STRANDS (GRADE 270).
4. SEE "DIAPHRAGM AND BEARING DETAILS" SHEET FOR BEARING PLATE DETAILS AND BEAM DETAILS AT BENT AND ABUTMENT.
5. USE COATED REINFORCING BARS CONFORMING TO AASHTO DESIGNATION M 284 OR M 111 AND M 31, GRADE 60.
6. FIELD VERIFY REQUIRED GIRDER LENGTH PRIOR TO GIRDER FABRICATION.

¾″ DIA X 2′-6 THREADED ROD WITH CONCRETE ANCHORS AT THE INTERIOR FACE OF THE EXTERIOR BEAMS ONLY. TYPICAL AT INTERMEDIATE DIAPHRAGMS. SEE FRAMING PLAN FOR LOCATIONS.

2″ DIA BLOCK-OUT THRU INTERIOR BEAMS. TYPICAL AT INTERMEDIATE DIAPHRAGMS.

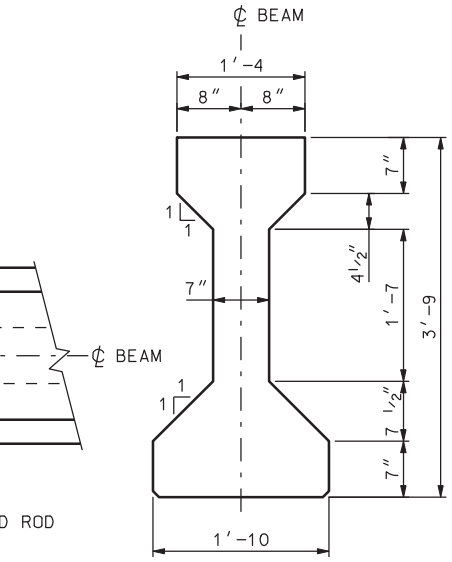


TYPICAL SECTION

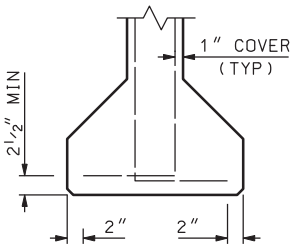


ALTERNATE BAR PLACEMENT

G31 BARS MAY BE ELIMINATED PROVIDED G32 BARS ARE MODIFIED AND PLACED AS SHOWN.

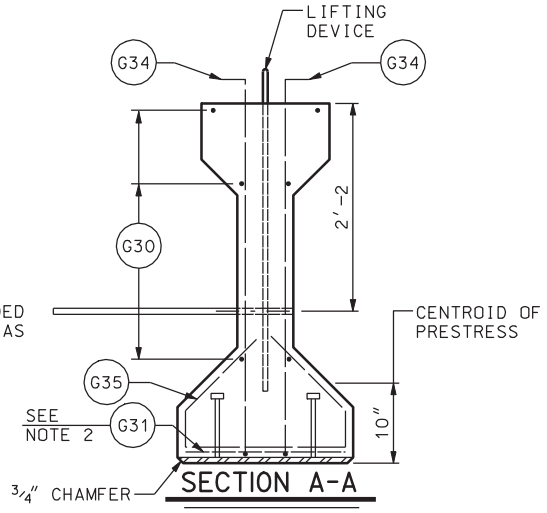


SECTION A-A

### AASHTO TYPE III BEAM

FINAL PRESTRESSING FORCES
AFTER LOSSES = 26.51 KIPS PER STRAND
f′ci = 4000 PSI
f′c = 6000 PSI
4 EXTERIOR BEAMS REQUIRED
4 INTERIOR BEAMS REQUIRED

MIN. AREA PRESTRESSING STEEL = 1.87 SQ. IN.

| NO. | DATE | BY | REMARKS |
|---|---|---|---|
| | | | |

REVISIONS

UTAH DEPARTMENT OF TRANSPORTATION
SALT LAKE CITY, UTAH
STRUCTURES DIVISION

URS

DESIGN PH 12/04 CHECK GTD 12/04
DRAWN DKH 12/04 CHECK PH 12/04
QUANT. CDT 12/04 CHECK CEL 12/04

APPROVAL RECOMM. DATE SENIOR DESIGN ENGR.
APPROVED FOR USE BY UDOT DATE UDOT BRIDGE ENGR.

I-15; CORRIDOR IN UTAH COUNTY
400 NORTH OVERPASS IN OREM
GIRDER DETAILS-SPANS 1 & 3

PROJECT NUMBER SP-15-6(52)241

UTAH
COUNTY

F-14W2
DRG. NO.

SHT. 15 OF 28

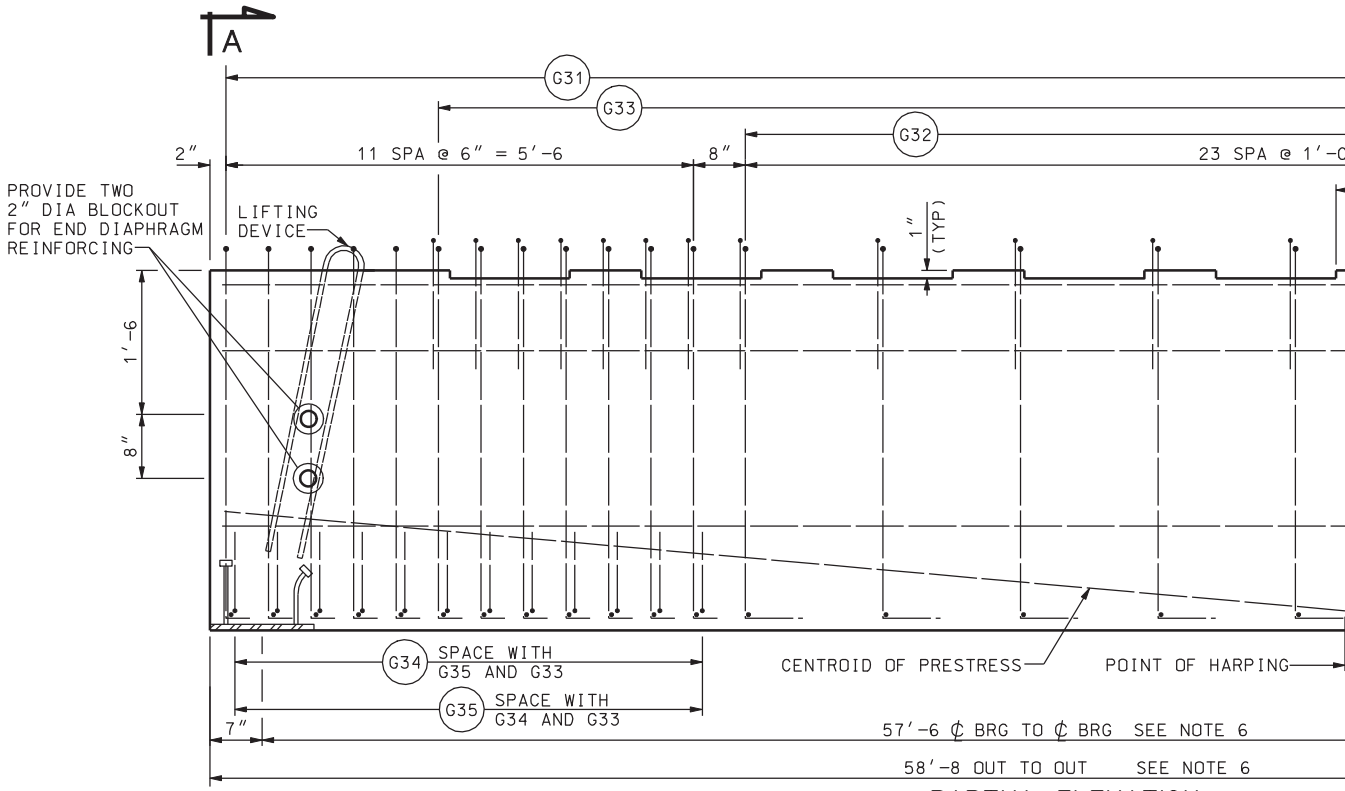


## PARTIAL ELEVATION

(SPN 2; GIRDERS 1 - 4)

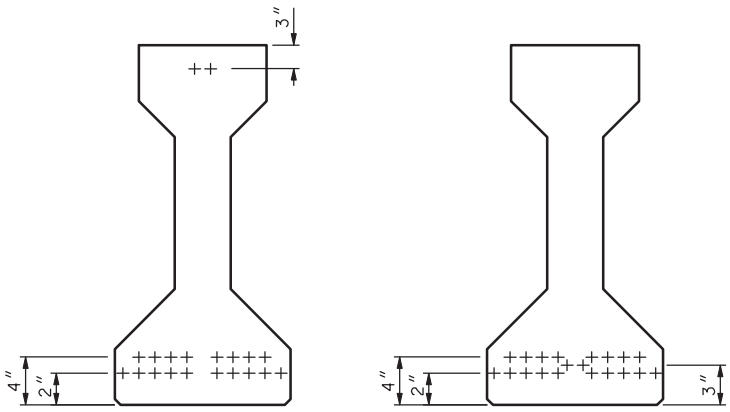


## STRAND PATTERN

(STRAND PATTERN AT ENDS)
NO. OF STRAIGHT STRANDS = 18
NO. OF DRAPED STRANDS = 2

## STRAND PATTERN

(STRAND PATTERN AT CENTER)

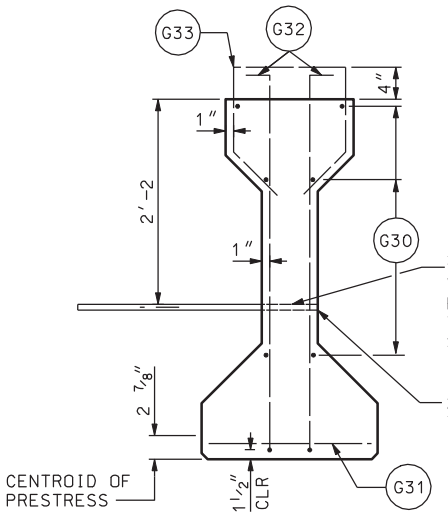


## SECTION B-B

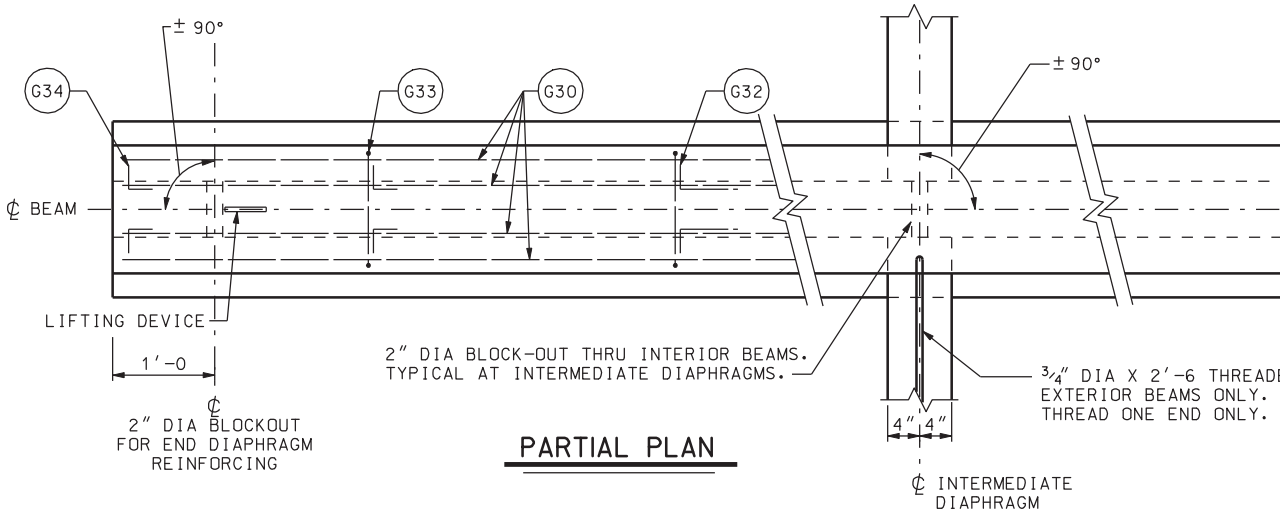


## PARTIAL PLAN

DGN File: IP_PWPcdms1717\4433_F14_16.dgn

02-MAY-2005

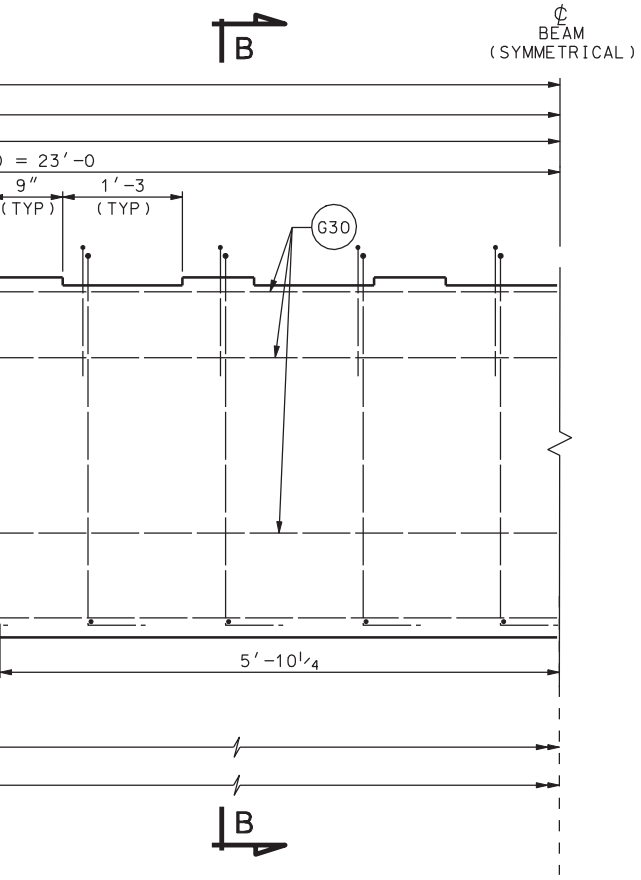


## REINFORCING STEEL SCHEDULE

| MARK | SIZE NO. | LENGTH | NO. REQ'D PER GIRDER | SKETCH |
|---|---|---|---|---|
| * G30 | 5 | 58′-4 | 6 | |
| G31 | 4 | 1′-6 | 71 | |
| G32 | 5 | 5′-1 | 94 | 3″, X, Y, 10″, Z, 4′-0 |
| G33 | 4 | 4′-4 | 61 | 10″, 9″, 1′-2, 1, 1 |
| G34 | 5 | 4′-6 | 48 | 3″, X, Y, 3″, Z, 4′-0 |
| G35 | 4 | 4′-8 | 24 | 5″, 7″, 1′-8, 1, 1 |

* LAP G30 BARS 3′-3″ MIN. AS NECESSARY

## NOTES

1. UNLESS OTHERWISE SHOWN, ALL DIMENSIONS ARE OUT TO OUT OF BARS.
2. PLACE BAR G31 IMMEDIATELY ABOVE LOWER ROW OF PRESTRESSING STRANDS.
3. USE ½″ DIAMETER SEVEN-WIRE STRESS RELIEVED PRESTRESSING STRANDS (GRADE 270).
4. SEE "DIAPHRAGM AND BEARING DETAILS" SHEET FOR BEARING PLATE DETAILS AND BEAM DETAILS AT BENT AND ABUTMENT.
5. USE COATED REINFORCING BARS CONFORMING TO AASHTO DESIGNATION M 284 OR M 111 AND M 31, GRADE 60.
6. FIELD VERIFY REQUIRED GIRDER LENGTH PRIOR TO GIRDER FABRICATION.

¾″ DIA X 2′-6 THREADED ROD WITH CONCRETE ANCHORS AT THE INTERIOR FACE OF THE EXTERIOR BEAMS ONLY. TYPICAL AT INTERMEDIATE DIAPHRAGMS. SEE FRAMING PLAN FOR LOCATIONS.

2″ DIA BLOCK-OUT THRU INTERIOR BEAMS. TYPICAL AT INTERMEDIATE DIAPHRAGMS.

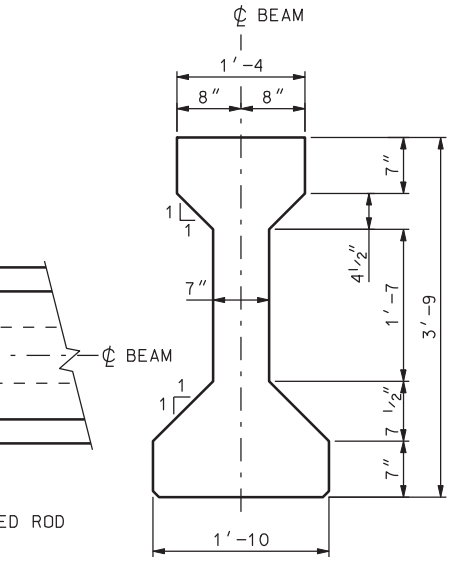


TYPICAL SECTION

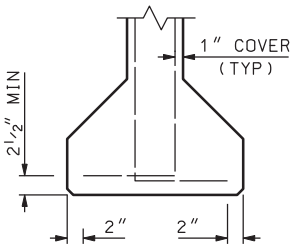


ALTERNATE BAR PLACEMENT

G31 BARS MAY BE ELIMINATED PROVIDED G32 BARS ARE MODIFIED AND PLACED AS SHOWN.

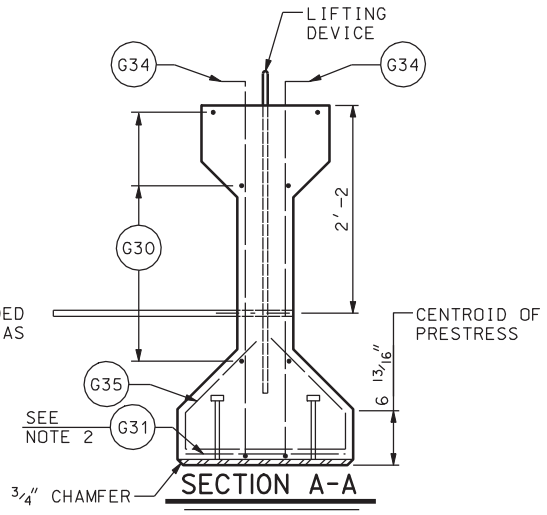


SECTION A-A

### AASHTO TYPE III BEAM

FINAL PRESTRESSING FORCES
AFTER LOSSES = 24.92 KIPS PER STRAND
f′ci = 4000 PSI
f′c = 6000 PSI
2 EXTERIOR BEAMS REQUIRED
2 INTERIOR BEAMS REQUIRED

MIN. AREA PRESTRESSING STEEL = 1.87 SQ. IN.

| NO. | DATE | BY | REMARKS |
|---|---|---|---|

REVISIONS

UTAH DEPARTMENT OF TRANSPORTATION
SALT LAKE CITY, UTAH
STRUCTURES DIVISION

URS

DESIGN PH 12/04 CHECK GTD 12/04
DRAWN DKH 12/04 CHECK PH 12/04
QUANT. CDT 12/04 CHECK CEL 12/04

APPROVAL RECOMM. DATE SENIOR DESIGN ENGR.
APPROVED FOR USE BY UDOT DATE UDOT BRIDGE ENGR.

I-15; CORRIDOR IN UTAH COUNTY
400 NORTH OVERPASS IN OREM
GIRDER DETAILS-SPAN 2

PROJECT NUMBER SP-15-6(52)241

UTAH
COUNTY

F-14W2
DRG. NO.

SHT. 16 OF 28

## CONCRETE QUANTITIES

| | |
|---|---|
| INTERMEDIATE DIAPHRAGMS | 7.1 CU YDS |

## NOTES

1. USE 1″ DIA HIGH TENSILE ANCHOR OR APPROVED EQUIVALENT.
2. PLACE BEARING PLATES AND PADS PERPENDICULAR TO GIRDER CENTER LINE.
3. SPACING OF REINFORCING STEEL MAY BE (±) USE THE NUMBER OF BARS SHOWN.

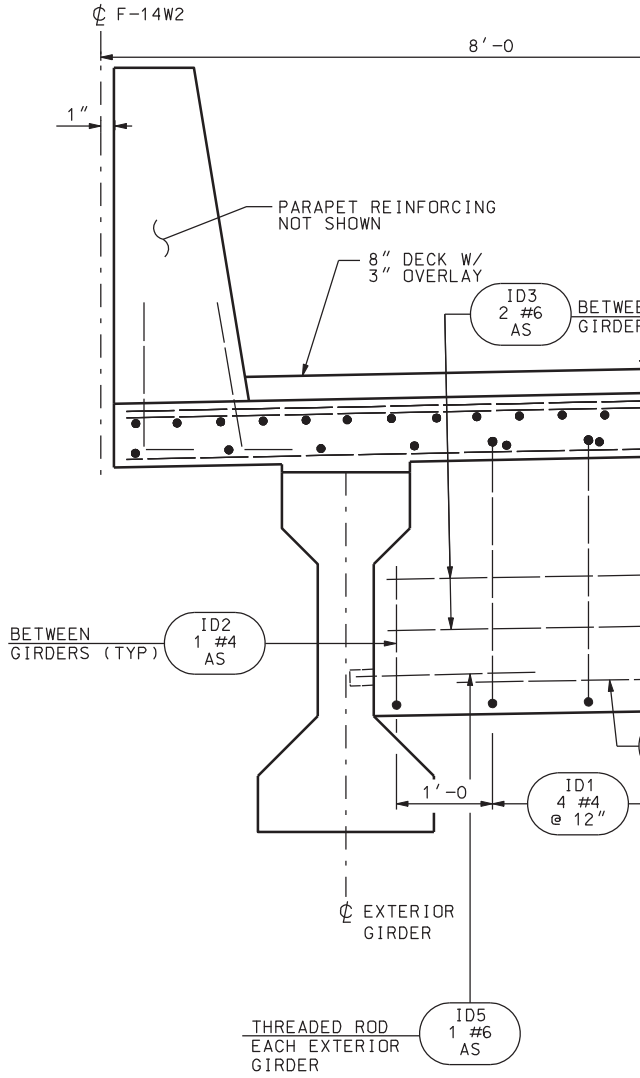


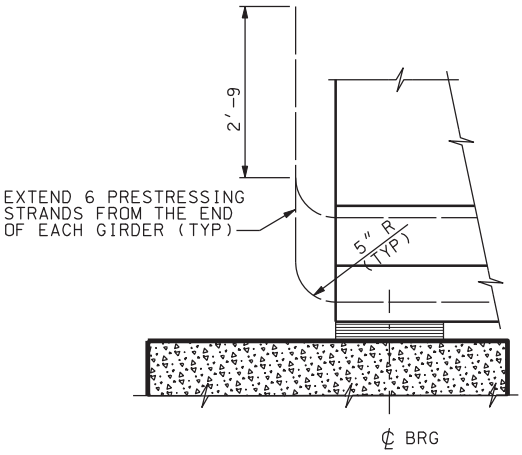


## GIRDER DETAILS AT ABUTMENT

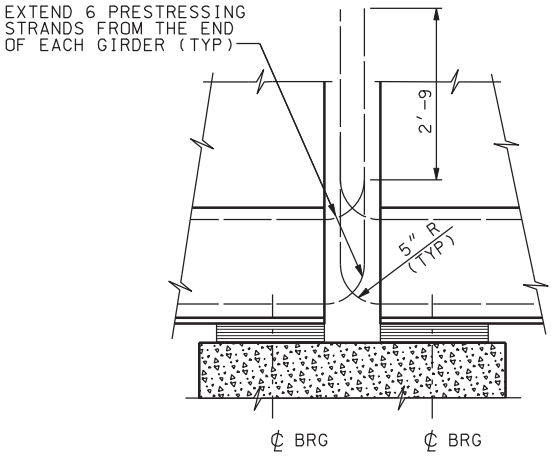


## GIRDER DETAILS AT BENT

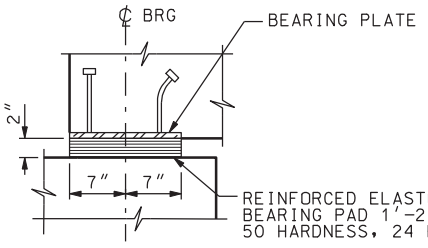


## BEARING DETAIL

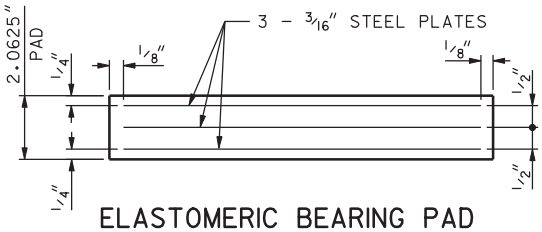


## ELASTOMERIC BEARING PAD

DGN File:IP_PWPcdns1717\4433_F14.17.dgn
02-MAY-2005

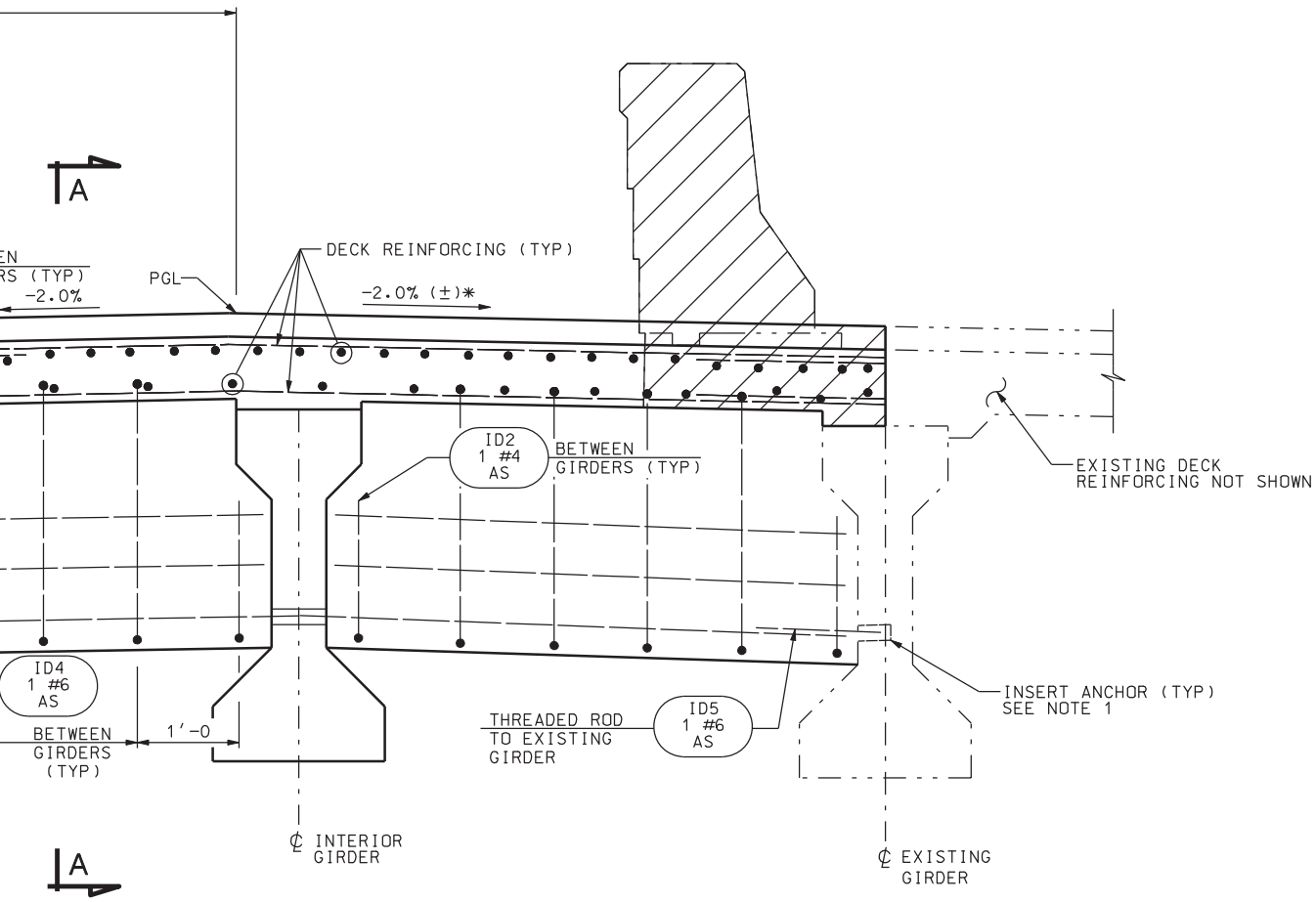


## INTERMEDIATE DIAPHRAGM DETAIL

(TYPICAL REINFORCING BETWEEN GIRDERS)
* MATCH EXISTING CROSS SLOPE

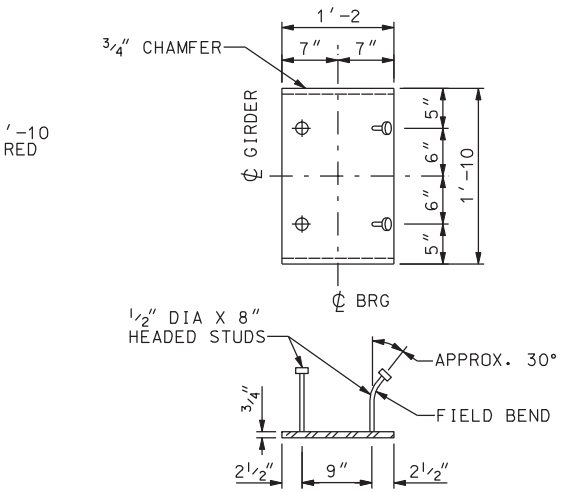


## BEARING PLATE DETAIL

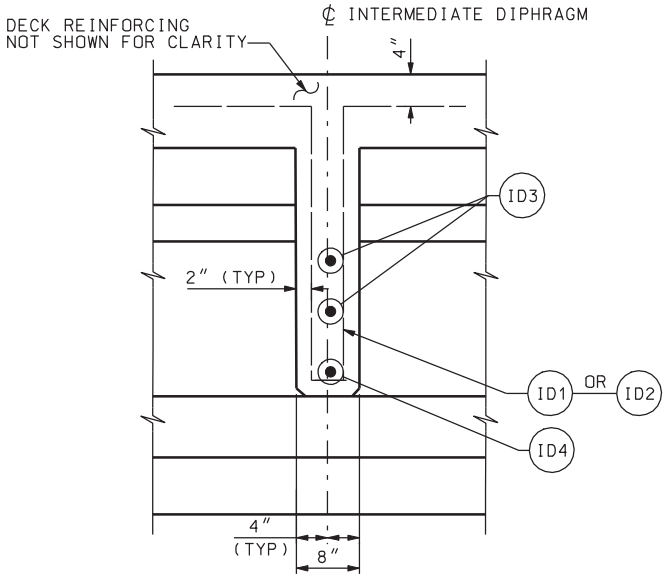


## SECTION A-A

| NO. | DATE | BY | REMARKS |
|---|---|---|---|
| | | | |

REVISIONS

UTAH DEPARTMENT OF TRANSPORTATION
SALT LAKE CITY, UTAH
STRUCTURES DIVISION

URS

DESIGN PH 12/04 CHECK GTD 12/04
DRAWN DKH 12/04 CHECK PH 12/04
QUANT. CDT 12/04 CHECK CEL 12/04

APPROVAL RECOMM. DATE SENIOR DESIGN ENGR.
APPROVED FOR USE BY UDOT DATE UDOT BRIDGE ENGR.

I-15; CORRIDOR IN UTAH COUNTY
400 NORTH OVERPASS IN OREM
DIAPHRAGM & BEARING DETAILS

PROJECT NUMBER SP-15-6(52)241

UTAH
COUNTY

F-14W2
DRG. NO.

SHT. 17 OF 28

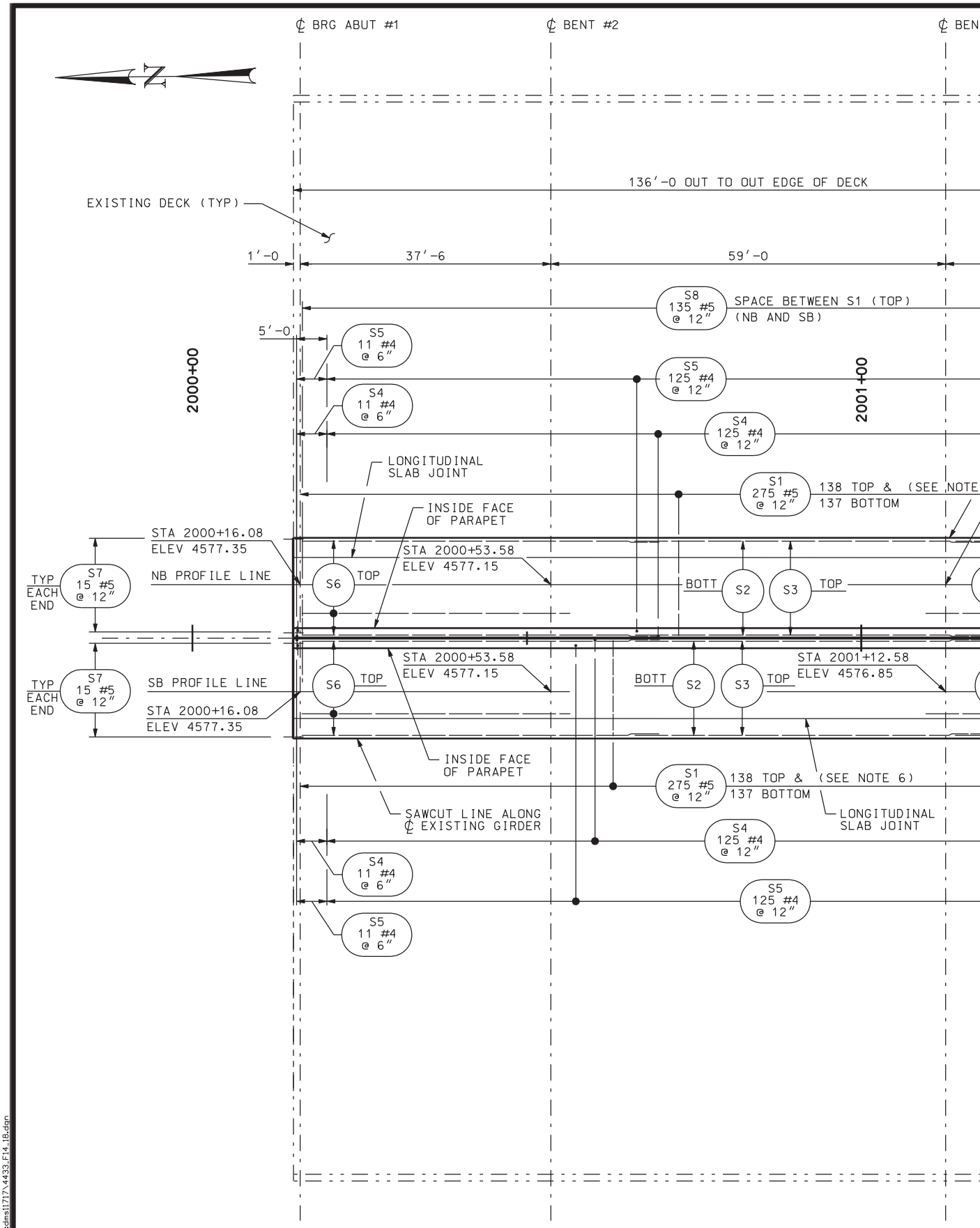


DECK PLAN

DGN File:IP_PWPcdms1717\4433_F14.18.dgn

02-MAY-2005

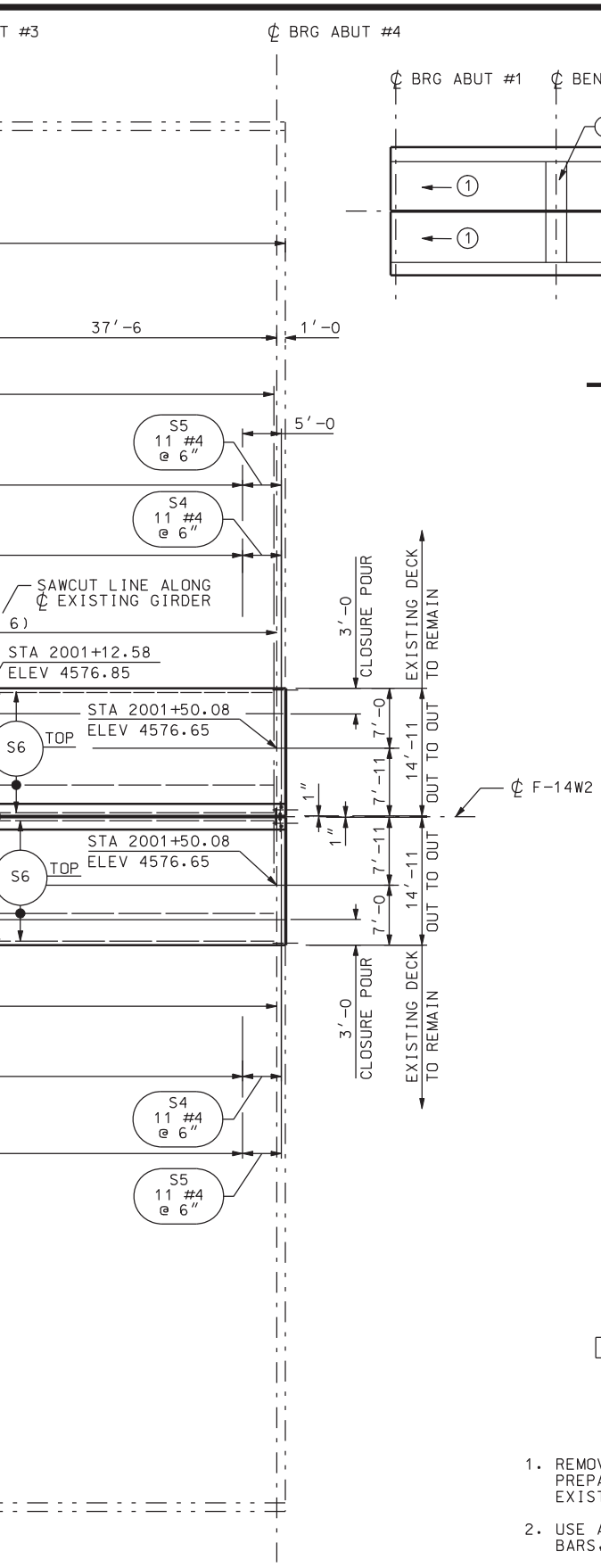


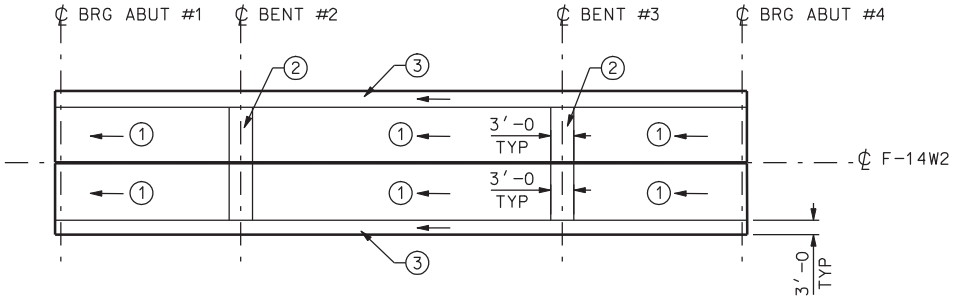


## POUR SEQUENCE

(3) SEQUENCE NUMBER

NOTE: PLACE DECK IN SECTIONS AND SEQUENCE AS INDICATED. POUR IN THE DIRECTION INDICATED. POURS (1) AND (2) CAN BE COMBINED WITH APPROVAL. CONTRACTOR MAY SUBMIT ALTERNATE PROCEDURES FOR APPROVAL.

## CONCRETE QUANTITIES

| | |
|---|---|
| DECK NB & SB | 100.2 CU YD |

## NOTES

1. REMOVE EXISTING MEDIAN PARAPET AND DECK SLAB TO PREPARE BRIDGE FOR WIDENING. CLEAN AND INCORPORATE EXISTING TRANSVERSE REINFORCING BARS INTO NEW CONSTRUCTION.
2. USE A MINIMUM LAP SPLICE OF 3′-1′ FOR S2 LONGITUDINAL BARS, AND 2′-7″ FOR S3 LONGITUDINAL BARS.
3. SEE "APPROACH SLAB PLAN" FOR APPROACH SLAB DETAILS.
4. SEE "PARAPET DETAILS" FOR PARAPET REINFORCEMENT.
5. SPACING OF REINFORCING STEEL MAY BE (±). USE NUMBER OF BARS SHOWN.
6. STAGGER TOP S1 BARS WITH BOTTOM S1 BARS. PLACE ONE S1 BAR ON TOP AT EACH END.
7. STAY-IN-PLACE FORMS ARE NOT PERMITTED.

| NO. | DATE | BY | REMARKS |
|---|---|---|---|

REVISIONS

UTAH DEPARTMENT OF TRANSPORTATION
SALT LAKE CITY, UTAH
STRUCTURES DIVISION

URS

DESIGN PH 12/04 CHECK GTD 12/04
DRAWN DKH 12/04 CHECK PH 12/04
QUANT. CDT 12/04 CHECK CEL 12/04

APPROVAL RECOMM. DATE SENIOR DESIGN ENGR.
APPROVED FOR USE BY UDOT DATE UDOT BRIDGE ENGR.

I-15; CORRIDOR IN UTAH COUNTY
400 NORTH OVERPASS IN OREM
DECK PLAN

PROJECT NUMBER SP-15-6(52)241

UTAH
COUNTY

F-14W2
DRG. NO.

SHT. 18 OF 28

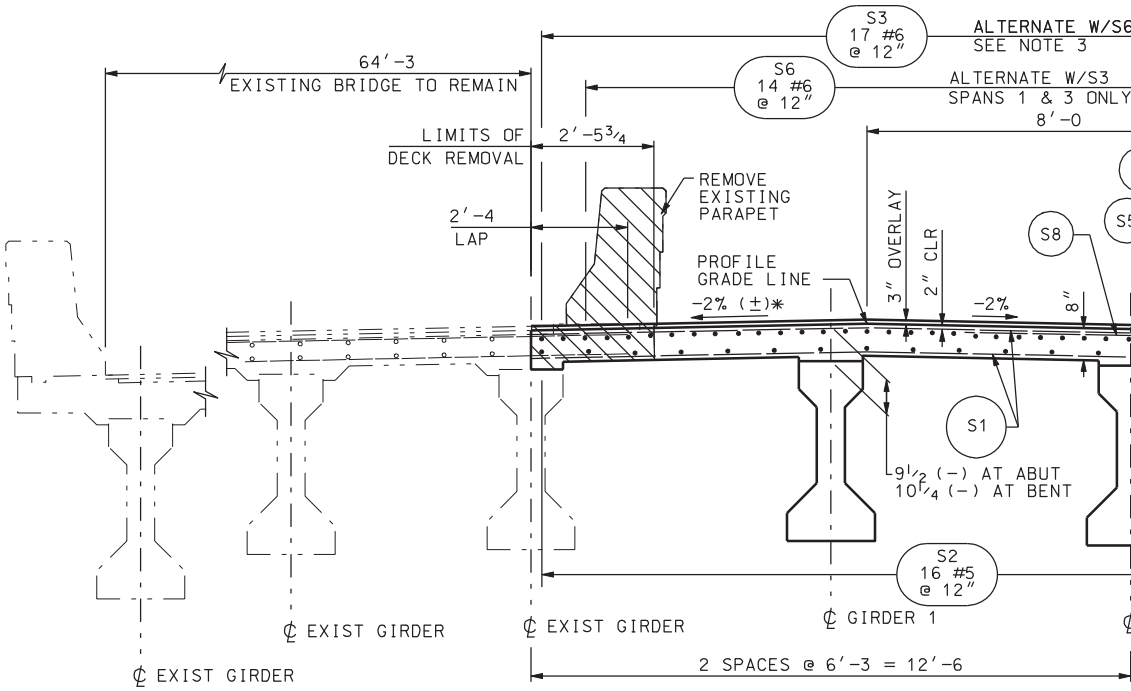


## NORTHBOUND DECK SECTION

LOOKING UPSTATION
* MATCH EXISTING CROSS SLOPE

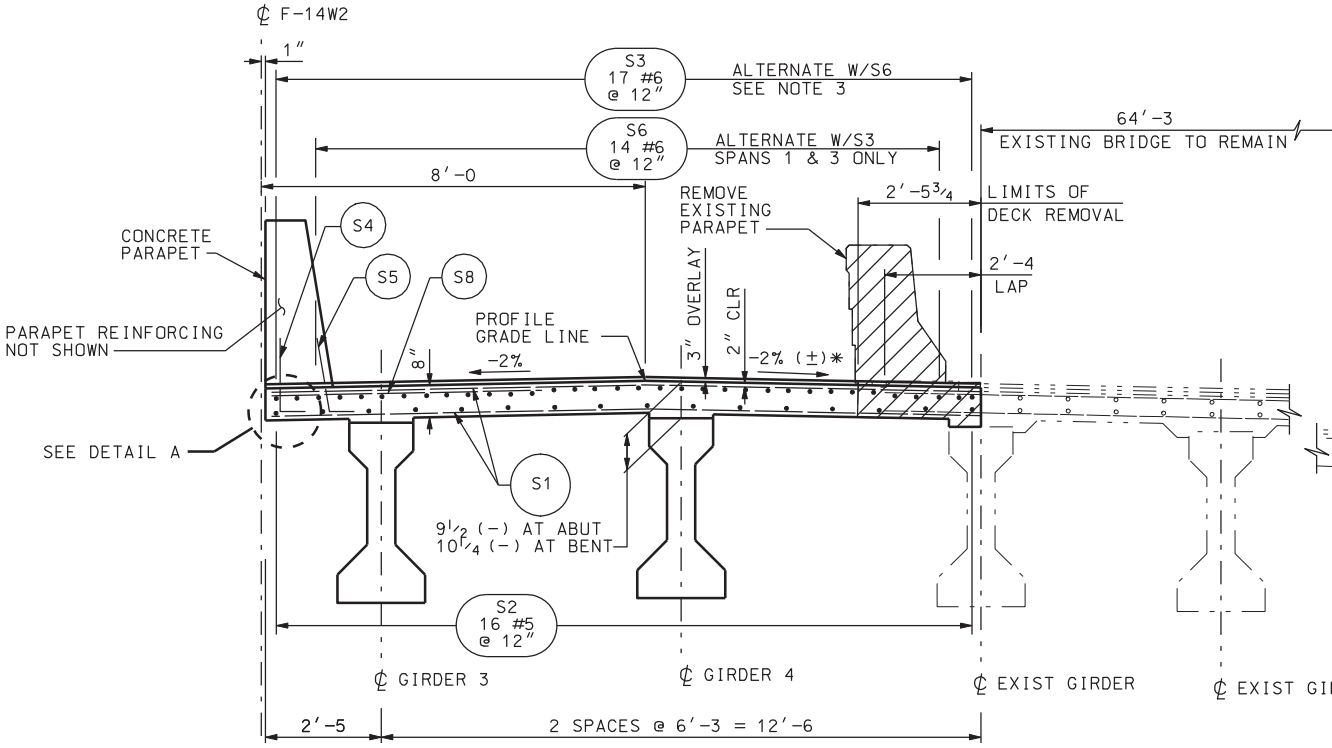


## SOUTHBOUND DECK SECTION

LOOKING UPSTATION
* MATCH EXISTING CROSS SLOPE

DGN File: IP_PWPcdns1717\4433_F14.19.dgn
02-MAY-2005

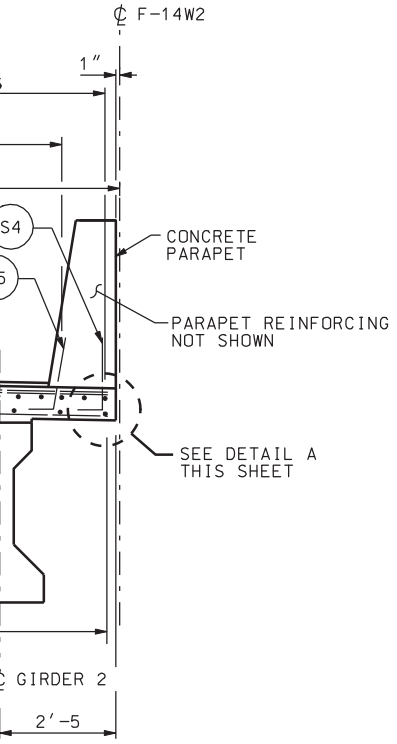


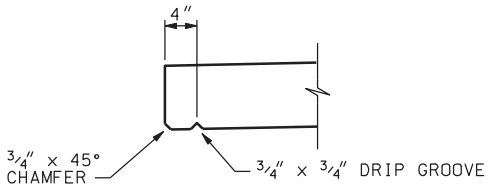


## DETAIL A

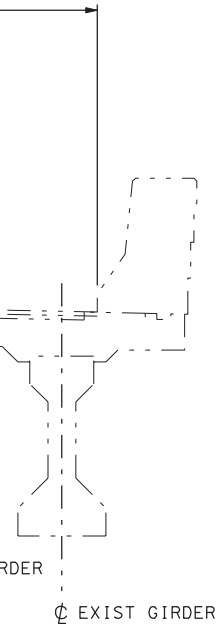


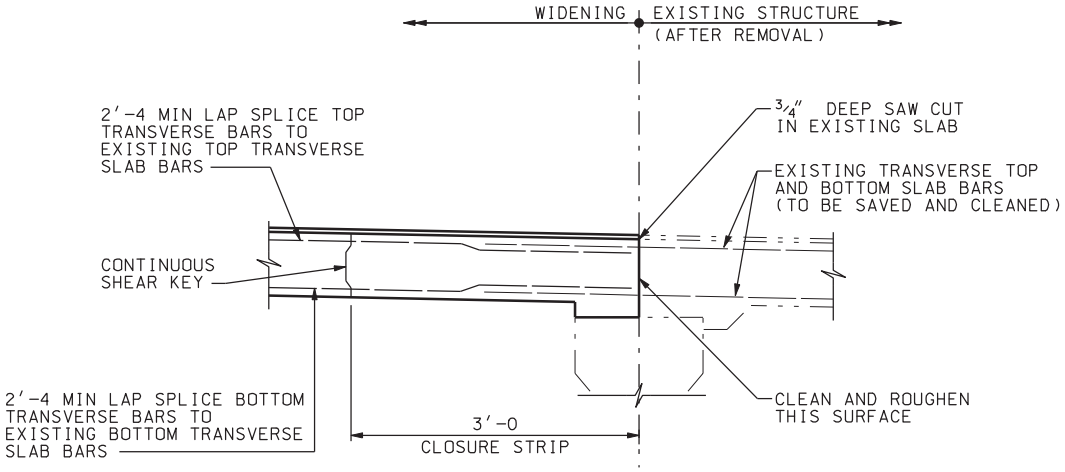


## SLAB CLOSURE

## NOTES

1. DECK AND INSIDE PARAPET REMOVAL INCLUDED IN BID PRICE FOR PREPARE BRIDGE FOR WIDENING.
2. SEE "PARAPET DETAILS" SHEET FOR DESIGN OF CONCRETE PARAPET.
3. STAGGER TOP S3 BAR WITH BOTTOM S2 BAR. PLACE ONE S3 BAR AT EACH END.
4. SEE REHABILITATION PLANS M-91 FOR OVERLAY DETAILS ON EXISTING BRIDGE DECK SECTION.
5. CLEAN AND INCORPORATE EXISTING REINFORCING BARS INTO NEW CONSTRUCTION.
6. SPACING OF REINFORCING MAY BE (±). USE NUMBER OF BARS SHOWN.

| NO. | DATE | BY | REMARKS |
|---|---|---|---|
| | | | |

REVISIONS

UTAH DEPARTMENT OF TRANSPORTATION
SALT LAKE CITY, UTAH
STRUCTURES DIVISION

URS

DESIGN PH 12/04 CHECK GTD 12/04
DRAWN DKH 12/04 CHECK PH 12/04
QUANT. CDT 12/04 CHECK CEL 12/04

APPROVAL RECOMM. DATE SENIOR DESIGN ENGR.
APPROVED FOR USE BY UDOT DATE UDOT BRIDGE ENGR.

I-15; CORRIDOR IN UTAH COUNTY
400 NORTH OVERPASS IN OREM
DECK SECTIONS
PROJECT NUMBER SP-15-6(52)241

UTAH
COUNTY

F-14W2
DRG. NO.

SHT. 19 OF 28

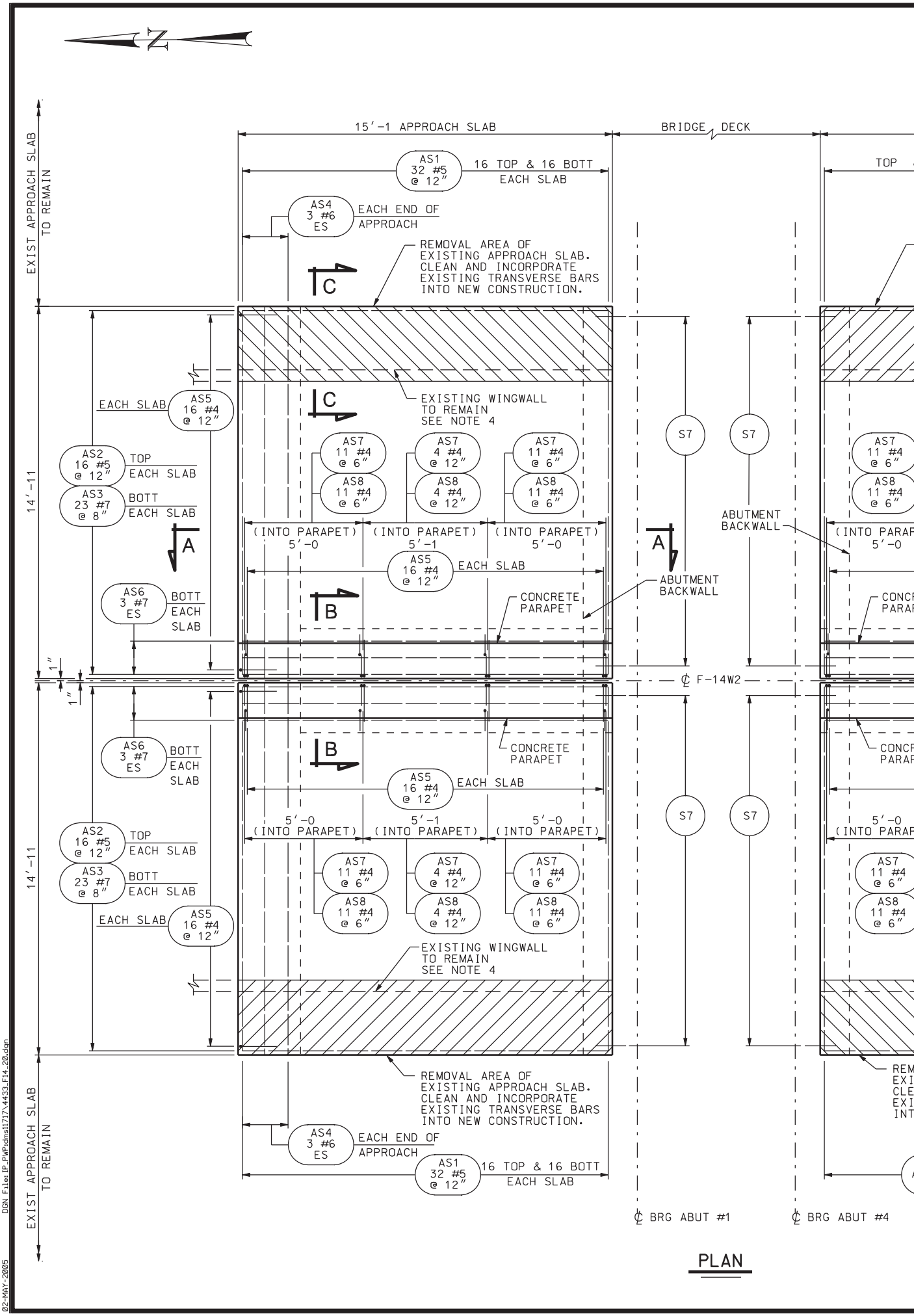


PLAN

DGN File: IP_PWPcdms1717\4433_F14.20.dgn

02-MAY-2005

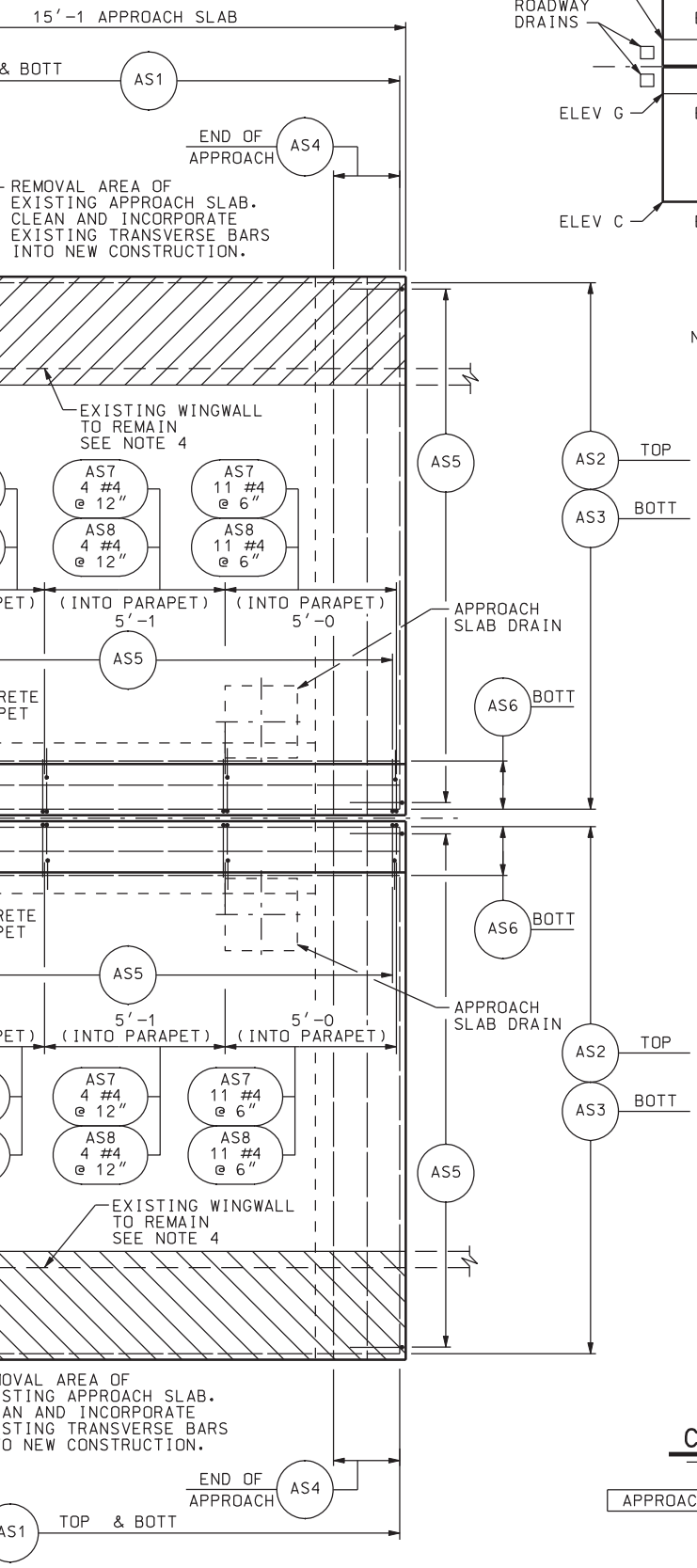


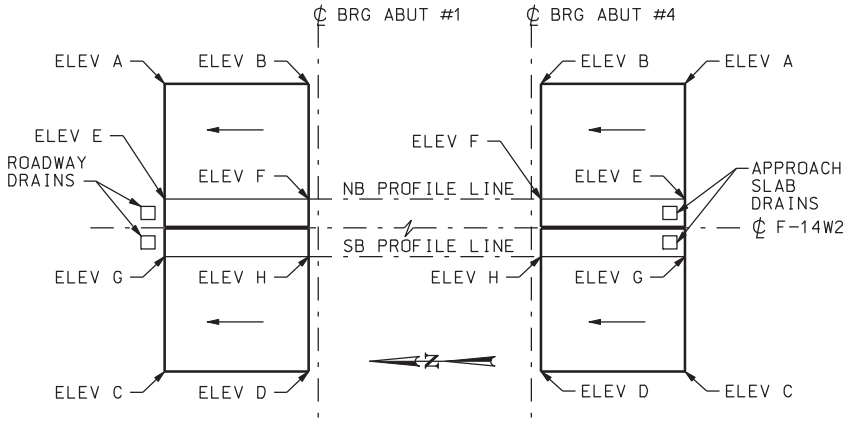


## KEY PLAN

NOTES: 1. PLACE APPROACH SLAB DIRECTION AS INDICATED. CONTRACTOR MAY SUBMIT ALTERNATE PROCEDURES FOR APPROVAL.

2. FOR ELEVATIONS RELATING TO LETTERS SHOWN SEE "SCREED ELEVATIONS" SHEET.

## NOTES

1. FOR SECTIONS A-A, B-B AND C-C, SEE "APPROACH SLAB DETAILS".
2. SEE "APPROACH SLAB DRAIN DETAILS" FOR DRAIN DETAILS.
3. REMOVE EXISTING APPROACH SLAB TO PREPARE BRIDGE FOR WIDENING. CLEAN EXISTING APPROACH SLAB TRANSVERSE REINFORCING TO BE USED IN NEW CONSTRUCTION.
4. REMOVE TOP OF WINGWALL APPROXIMATELY 1'-6 TO PLACE 6" MIN OF RIGID PLASTIC FOAM BETWEEN TOP OF WINGWALL AND BOTTOM OF APPROACH SLAB.
5. SPACING OF REINFORCING MAY BE (±) USE NUMBER OF BARS SHOWN.
6. ADJUST APPROACH SLAB ELEVATIONS TO MATCH EXISTING APPROACH AND ROADWAY ELEVATIONS. IF UNDERMINING FOUND DURING CONSTRUCTION, FILL VOID IN FIELD.

## CONCRETE QUANTITIES

| | |
|---|---|
| APPROACH SLAB NB & SB | 38.2 CU YDS |

| NO. | DATE | BY | REMARKS |
|---|---|---|---|
| | | | |

REVISIONS

UTAH DEPARTMENT OF TRANSPORTATION
SALT LAKE CITY, UTAH
STRUCTURES DIVISION

URS

DESIGN PH 12/04 CHECK GTD 12/04
DRAWN DKH 12/04 CHECK PH 12/04
QUANT. CDT 12/04 CHECK CEL 12/04

APPROVAL RECOMM. DATE SENIOR DESIGN ENGR.
APPROVED FOR USE BY UDOT DATE UDOT BRIDGE ENGR.

I-15; CORRIDOR IN UTAH COUNTY
400 NORTH OVERPASS IN OREM
APPROACH SLAB PLAN

PROJECT NUMBER SP-15-6(52)241

UTAH
COUNTY

F-14W2
DRG. NO.

SHT. 20 OF 28

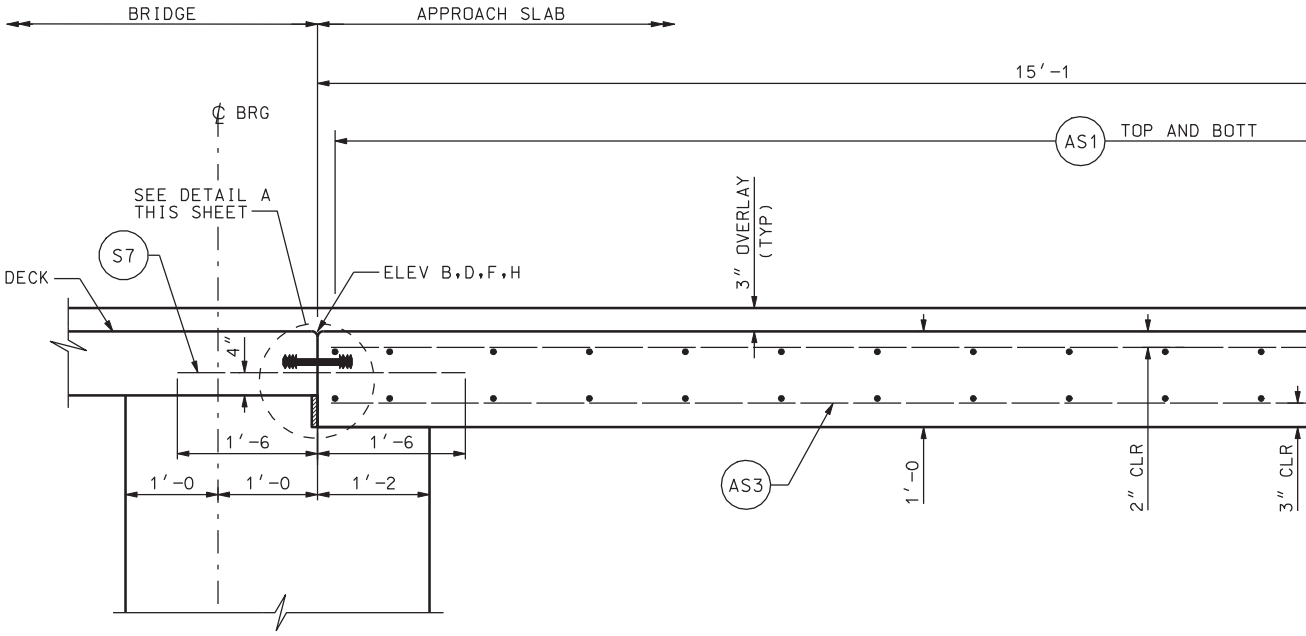


SECTION A-A

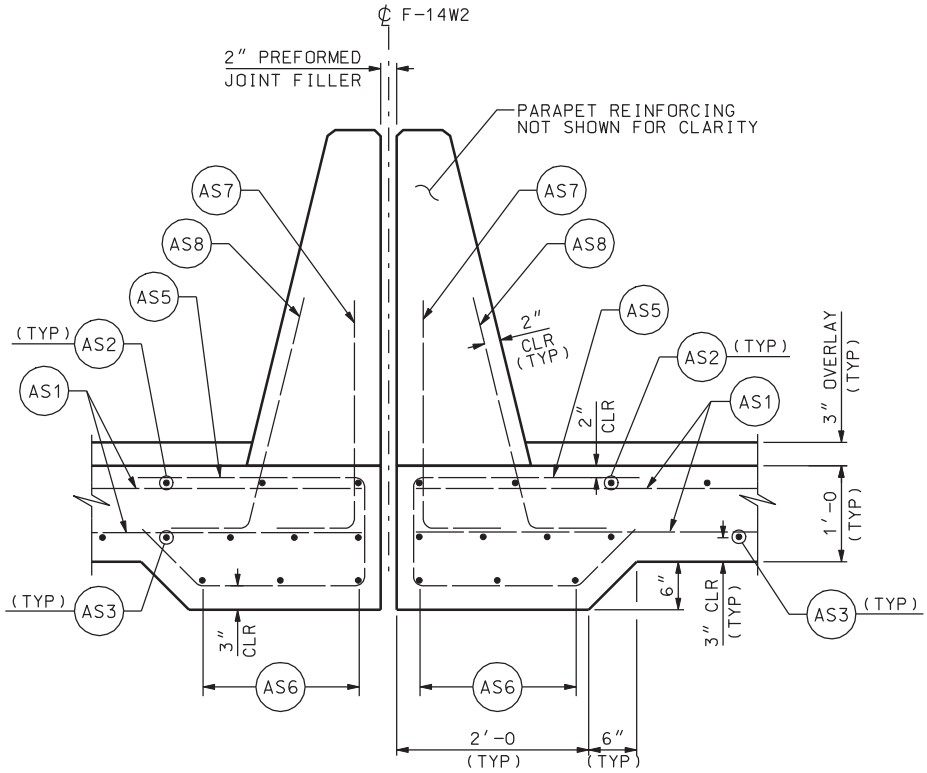


SECTION B-B

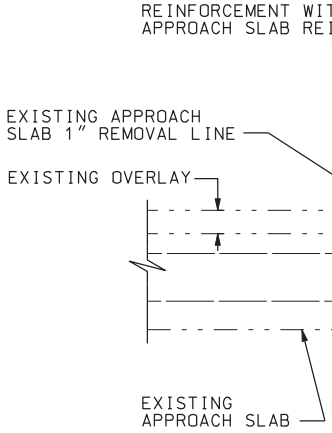


NOTE: 1. SEE "PRE
2. LONGITUD

DGN File:IP_PWPcdns1717\4433_F14_21.dgn

02-MAY-2005

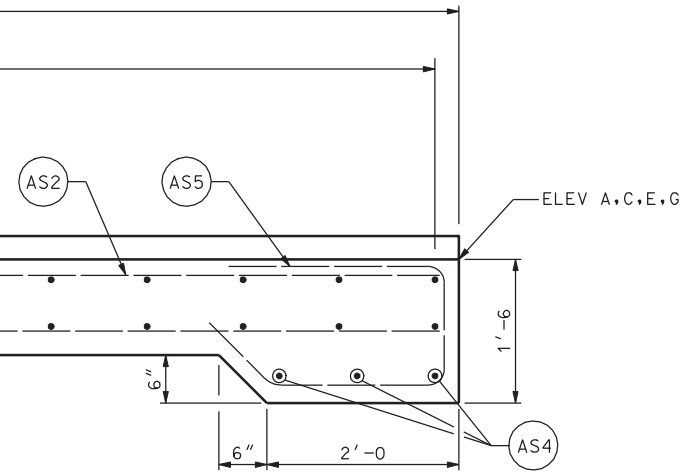


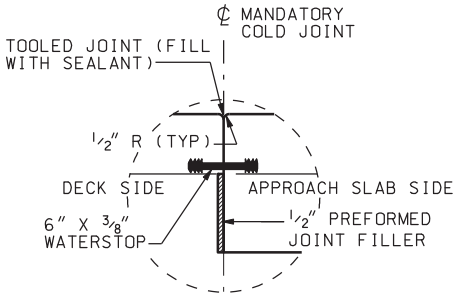


DETAIL A

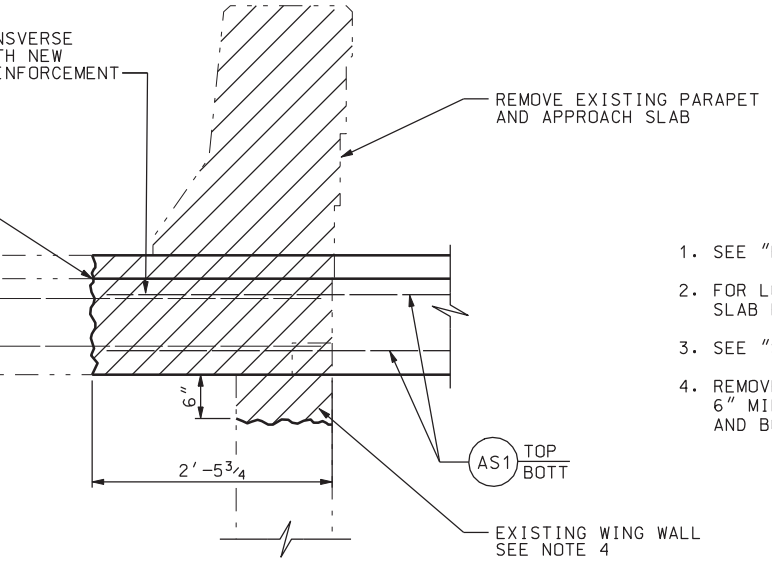


PARE BRIDGE FOR WIDENING" SPECIFICATION.
INAL REINFORCING NOT SHOWN FOR CLARITY.

SECTION C-C

## NOTES

1. SEE "PARAPET DETAILS" SHEET FOR PARAPET REINFORCEMENT.
2. FOR LOCATION OF SECTIONS A-A, B-B AND C-C, SEE "APPROACH SLAB PLAN".
3. SEE "SCREED ELEVATIONS" FOR ELEVATIONS.
4. REMOVE TOP OF WINGWALL APPROXIMATELY 1'-6. PLACE 6" MIN OF RIGID PLASTIC FOAM BETWEEN TOP OF WINGWALL AND BOTTOM OF APPROACH SLAB.

| NO. | DATE | BY | REMARKS |
|---|---|---|---|
| | | | |

REVISIONS

UTAH DEPARTMENT OF TRANSPORTATION
SALT LAKE CITY, UTAH
STRUCTURES DIVISION

URS

DESIGN PH 12/04 CHECK GTD 12/04
DRAWN DKH 12/04 CHECK PH 12/04
QUANT. CDT 12/04 CHECK CEL 12/04

APPROVAL RECOMM. DATE SENIOR DESIGN ENGR.
APPROVED FOR USE BY UDOT DATE UDOT BRIDGE ENGR.

I-15; CORRIDOR IN UTAH COUNTY
400 NORTH OVERPASS IN OREM
APPROACH SLAB DETAILS

PROJECT NUMBER SP-15-6(52)241

UTAH
COUNTY

F-14W2
DRG. NO.

SHT. 21 OF 28

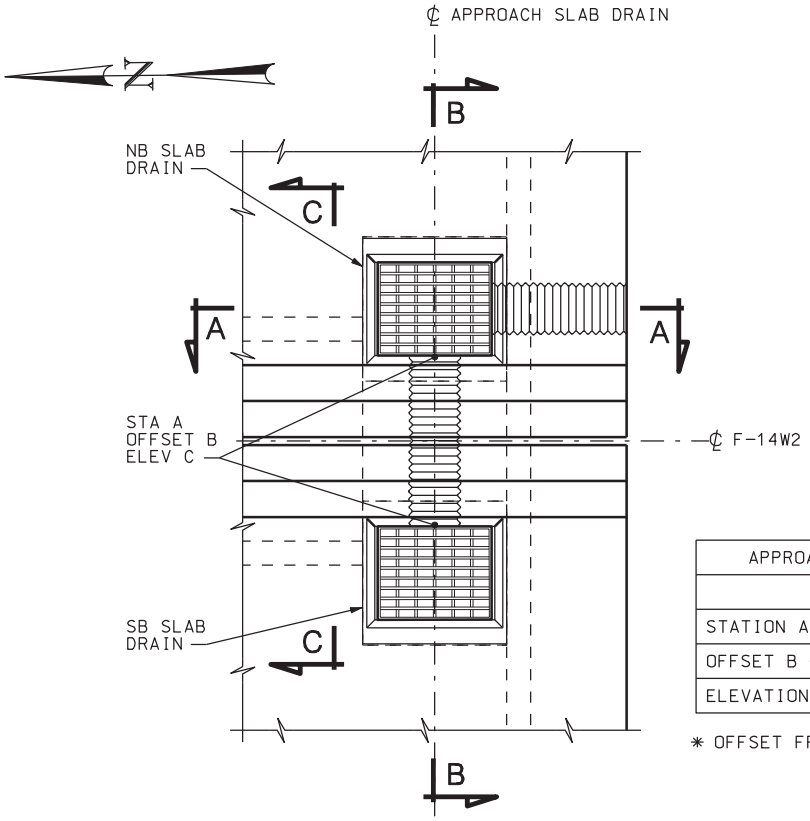


TYPICAL PLAN

| APPROACH SLAB DRAIN LOCATIONS | | |
|---|---|---|
| | NB DRAIN | SB DRAIN |
| STATION A | 2001+62.17 | 2001+62.17 |
| OFFSET B * | 1.67 LT | 1.67 RT |
| ELEVATION C | 4576.67 | 4576.67 |

* OFFSET FROM ℄ F-14W2

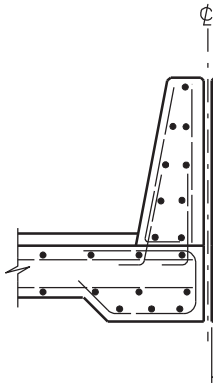

SECTIO

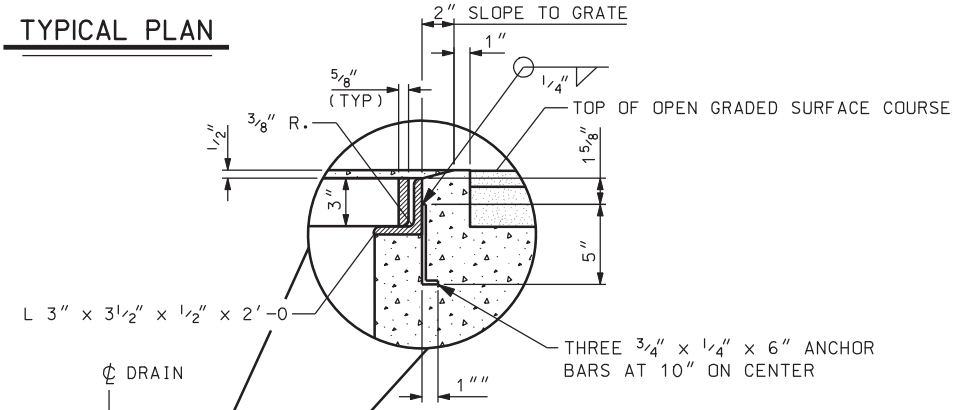


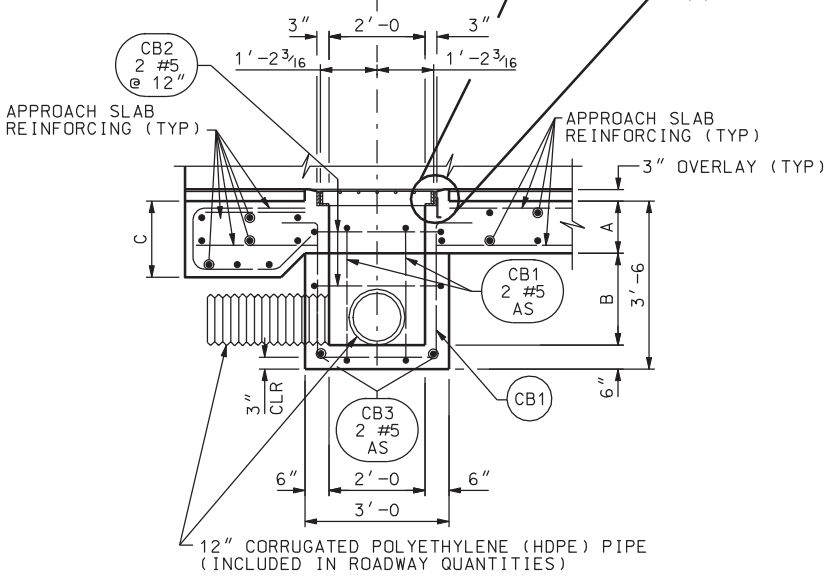


SECTION A-A

| LOCATION | A | B | C |
|---|---|---|---|
| APPROACH SLAB DRAIN | 1'-0 | 2'-0 | 1'-6 |

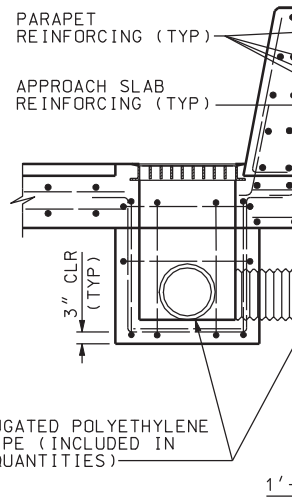


SECT

BOTH SIDES IDENTICAL.
CALLOUTS SHOWN ON C

DGN File:IP_PWPcdns1717\4433_F14.22.dgn

02-MAY-2005

F-14W2

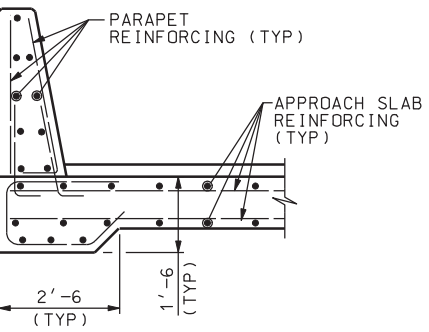


ON C-C

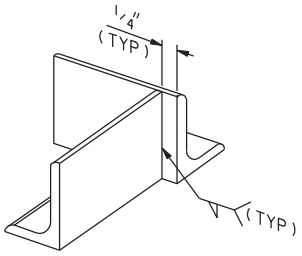


DETAIL D

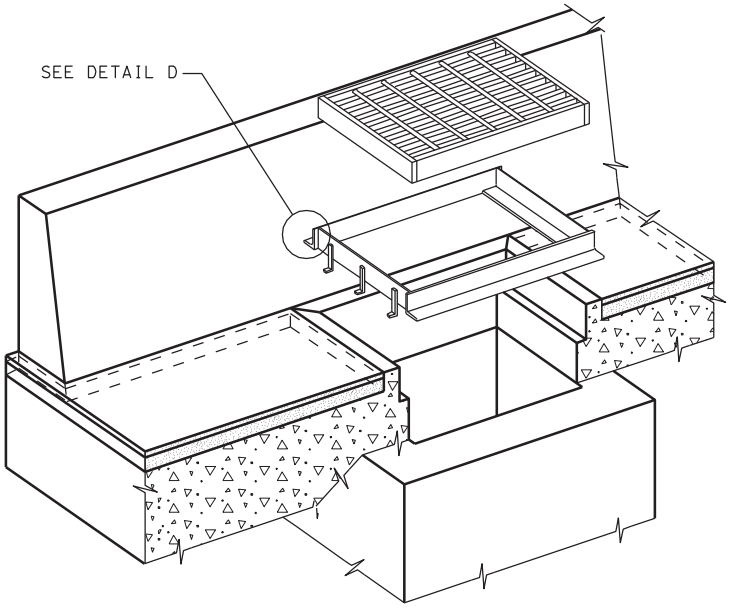


ISOMETRIC

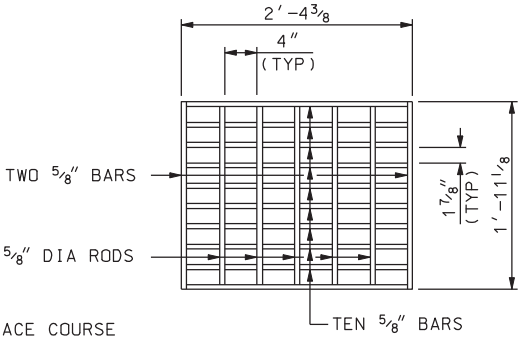


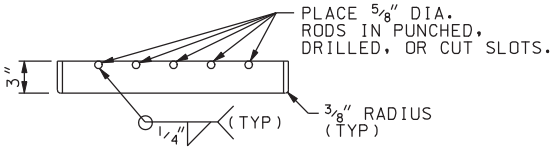


GRATE DETAIL

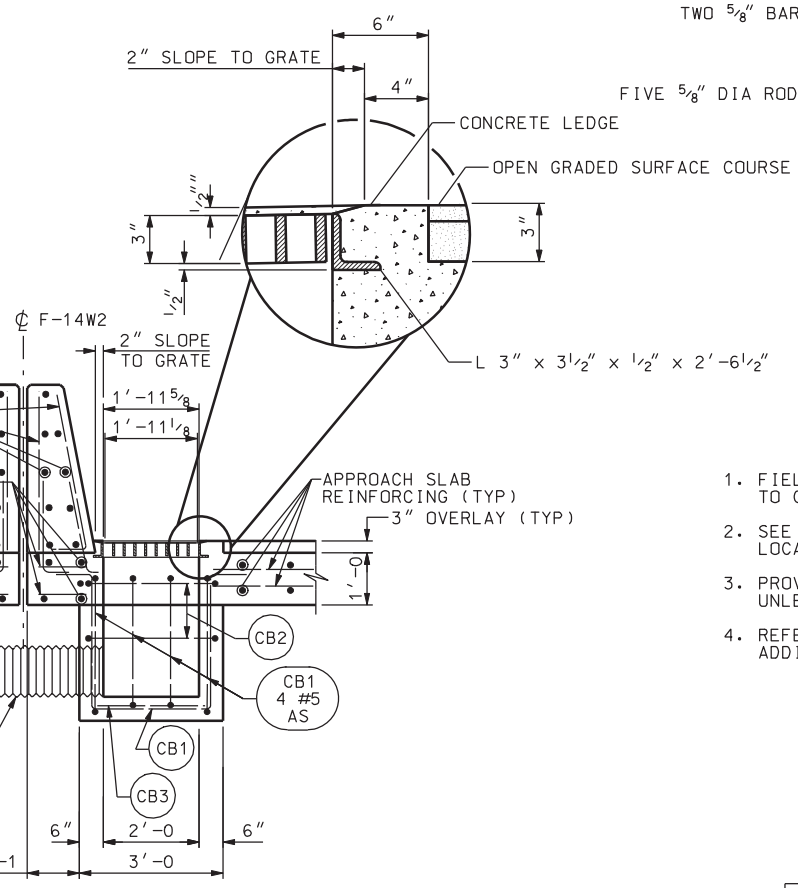


TION B-B

DIMENSIONS AND REINFORCING
ONE SIDE ONLY FOR CLARITY.

1. FIELD CUT OR BEND APPROACH SLAB REINFORCING TO CLEAR APPROACH SLAB DRAINS.
2. SEE "APPROACH SLAB PLAN" SHEET FOR ACTUAL LOCATIONS OF DRAINS.
3. PROVIDE 2" MIN COVER TO REINFORCING STEEL UNLESS NOTED OTHERWISE.
4. REFER TO ROADWAY DETAILS SHEET DT-15 FOR ADDITIONAL DETAILS.

CONCRETE QUANTITIES

| | |
|---|---|
| 2 CATCH BASINS AT 0.5 CU YDS = | 1.0 CU YDS |

STRUCTURAL STEEL QUANTITY

| | |
|---|---|
| 2 GRATE AND FRAMES AT 273 LBS = | 546 LBS |

| NO. | DATE | BY | REMARKS |
|---|---|---|---|
| | | | |

REVISIONS

UTAH DEPARTMENT OF TRANSPORTATION
SALT LAKE CITY, UTAH
STRUCTURES DIVISION

URS

DESIGN PH 12/04 CHECK GTD 12/04
DRAWN DKH 12/04 CHECK PH 12/04
QUANT. CDT 12/04 CHECK CEL 12/04

APPROVAL RECOMM. DATE SENIOR DESIGN ENGR.
APPROVED FOR USE BY UDOT DATE UDOT BRIDGE ENGR.

I-15; CORRIDOR IN UTAH COUNTY
400 NORTH OVERPASS IN OREM
APPROACH SLAB DRAIN DETAILS

PROJECT NUMBER SP-15-6(52)241

UTAH
COUNTY

F-14W2
DRG. NO.

SHT. 22 OF 28

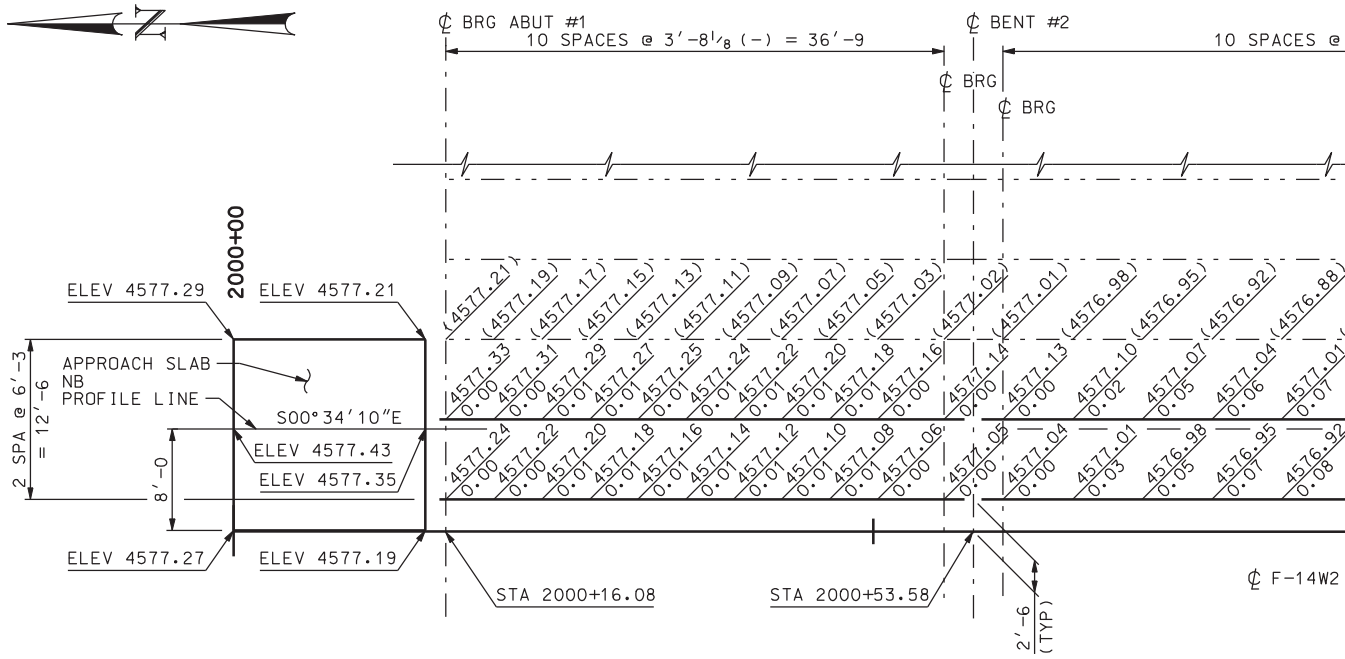


SCREED E

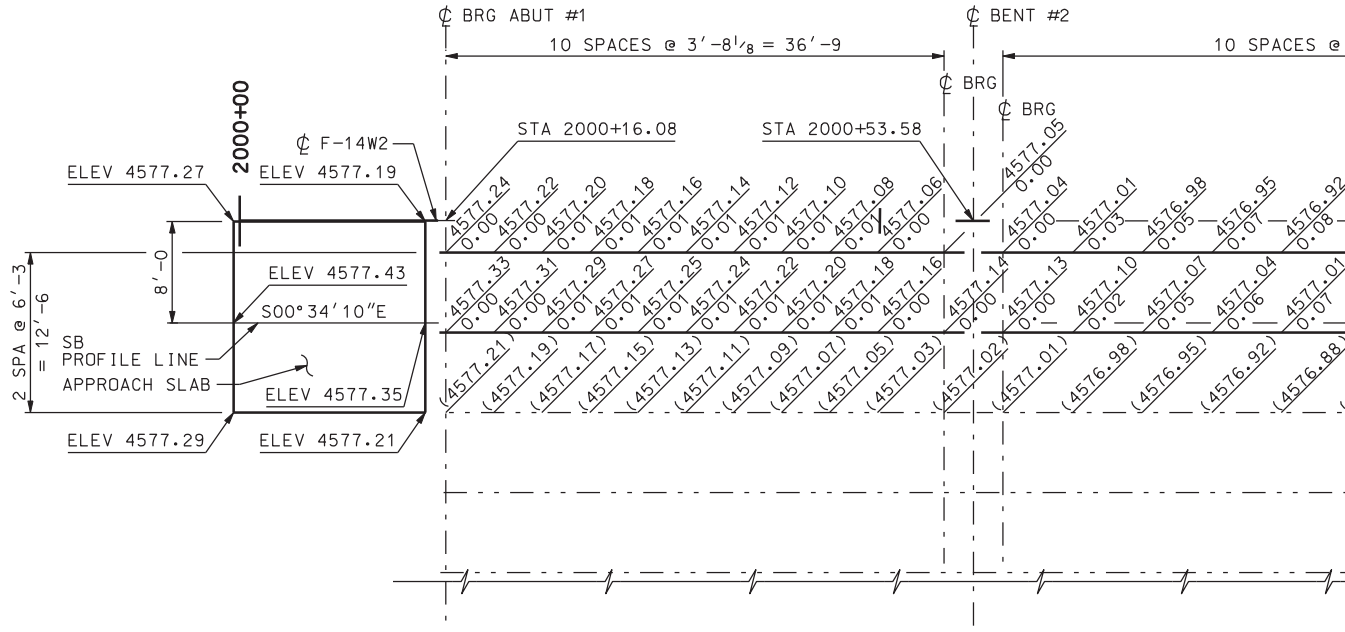


SCREED E

## NOTES

1. FIGURES ABOVE THE LINES ARE TOP OF CONCRETE DECK ELEVATION (FEET). FIGURES BELOW THE LINES ARE DEAD LOAD DEFLECTION (FEET) AND ARE TO BE ADDED TO ELEVATIONS SHOWN TO OBTAIN SCREED ELEVATIONS.
2. FIGURES SHOWN IN PARENTHESIS ARE APPROXIMATE TOP OF EXISTING CONCRETE DECK ELEVATION (FEET) BASED ON SURVEY INFORMATION.
3. LONGITUDINAL ELEVATIONS ARE MEASURED ALONG SURVEY LINE.
4. STATIONS AND OFFSETS ARE FROM ℄ F-14W2.
5. ADJUST APPROACH SLAB ELEVATIONS TO MATCH EXISTING APPROACH AND ROADWAY ELEVATIONS. IF UNDERMINING FOUND DURING CONSTRUCTION, FILL VOID IN FIELD.

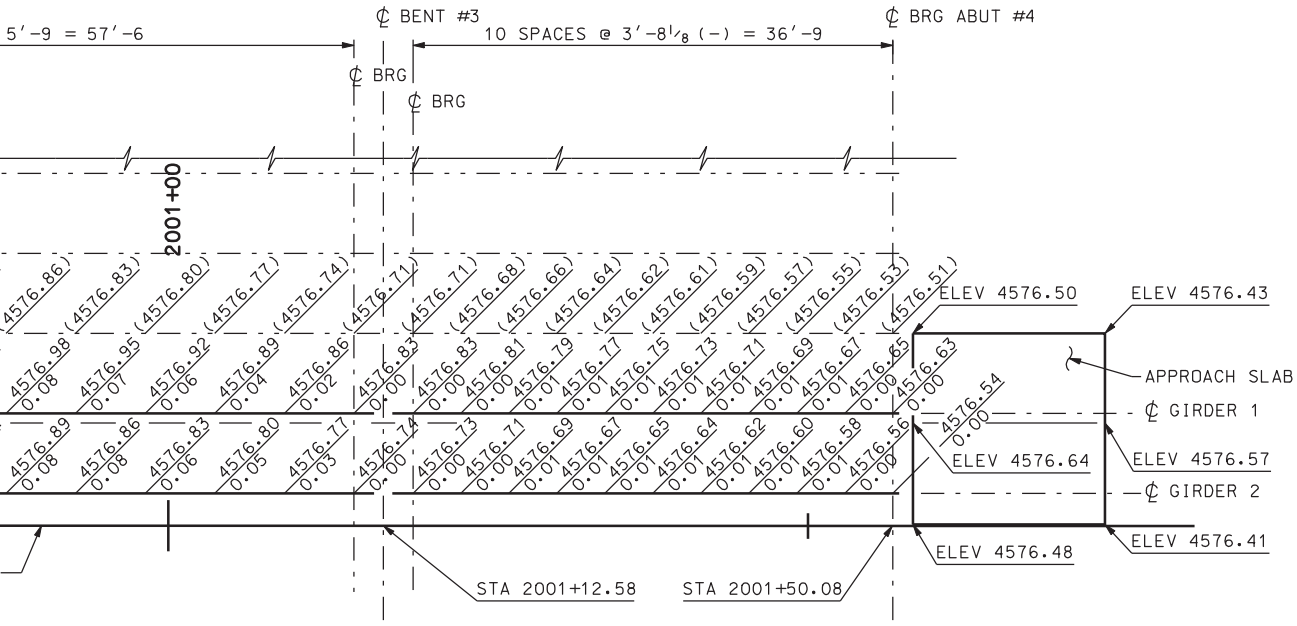


LEVATIONS NB

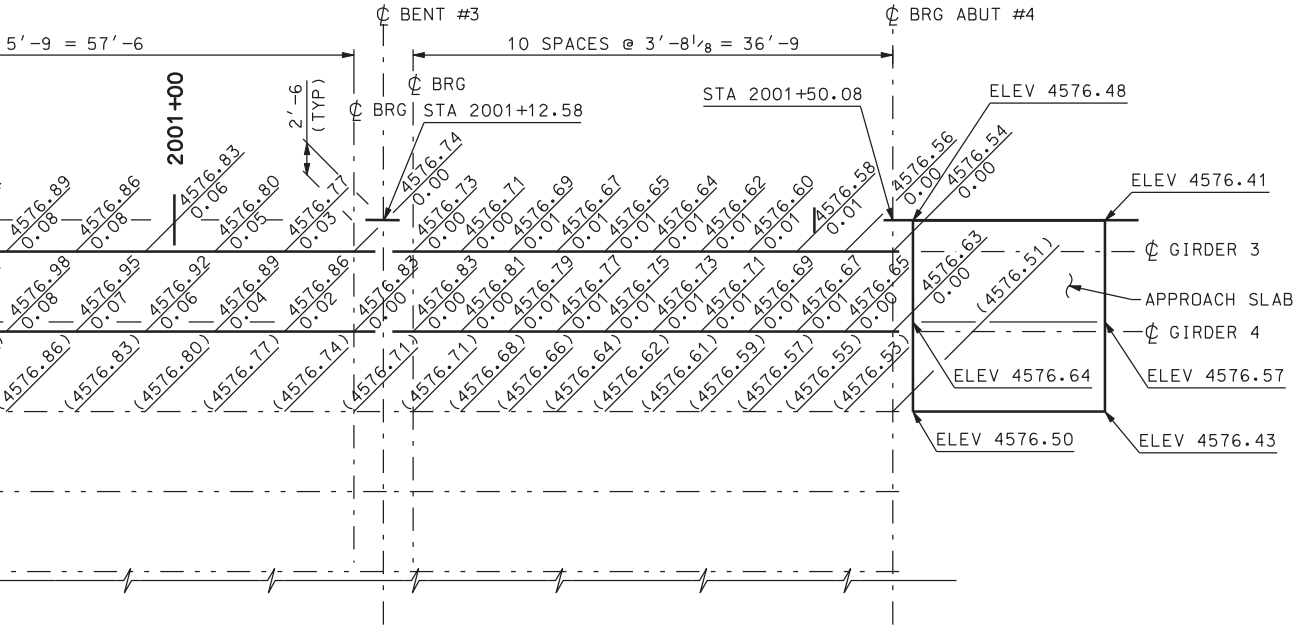


LEVATIONS SB

| NO. | DATE | BY | REMARKS |
|---|---|---|---|

REVISIONS

UTAH DEPARTMENT OF TRANSPORTATION
SALT LAKE CITY, UTAH
STRUCTURES DIVISION

URS

DESIGN PH 12/04 CHECK GTD 12/04
DRAWN DKH 12/04 CHECK PH 12/04
QUANT. CDT 12/04 CHECK CEL 12/04

APPROVAL RECOMM. DATE SENIOR DESIGN ENGR.
APPROVED FOR USE BY UDOT DATE UDOT BRIDGE ENGR.

I-15; CORRIDOR IN UTAH COUNTY
400 NORTH OVERPASS IN OREM
SCREED ELEVATIONS

PROJECT NUMBER SP-15-6(52)241

UTAH
COUNTY

F-14W2
DRG. NO.

SHT. 23 OF 28

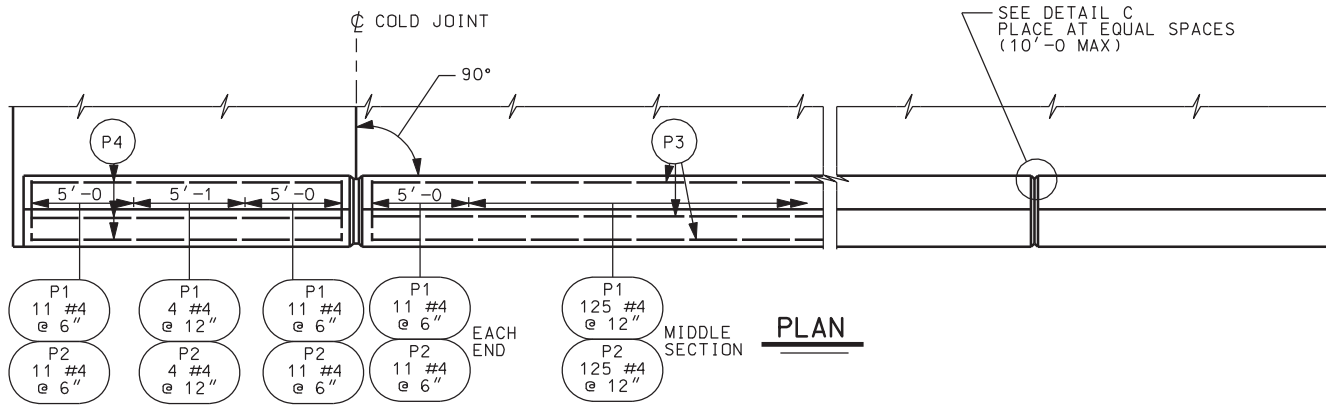


PLAN

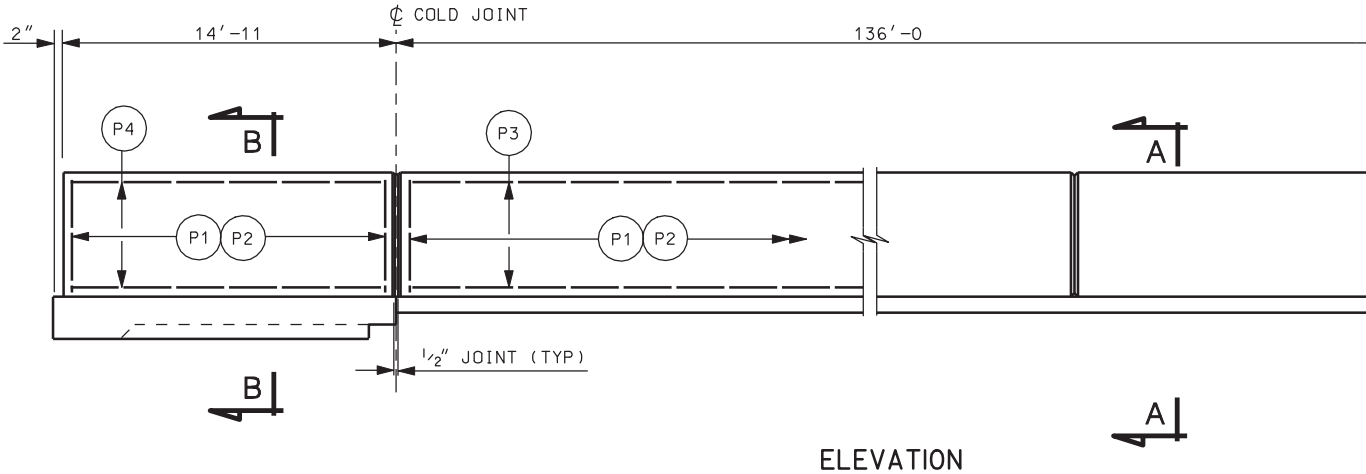


ELEVATION

ALL DIMENSIONS SHOWN ARE ALONG EDGE OF DECK

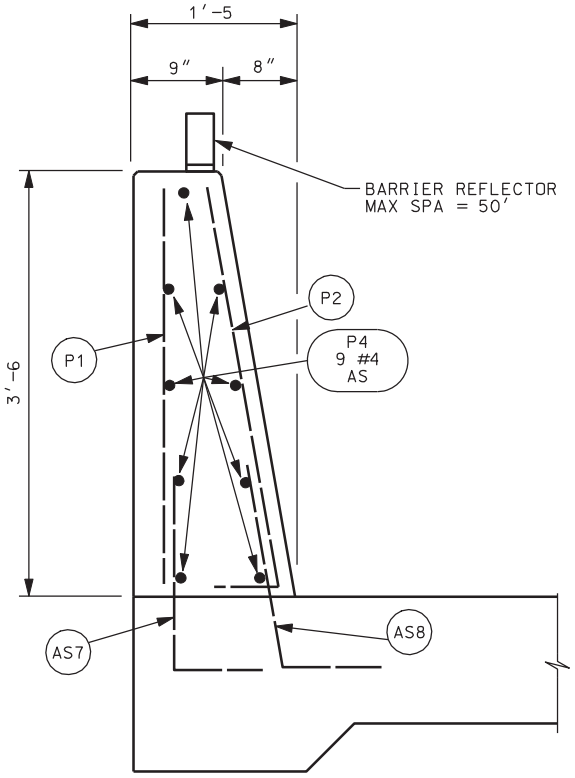


SECTION B-B

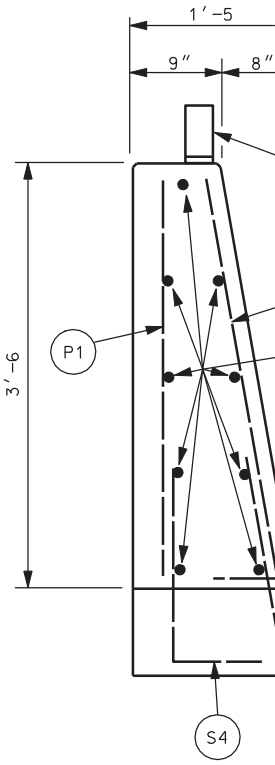


SECTION

DGN File:IP_PWPcdms1717\4433_F14.24.dgn

02-MAY-2005

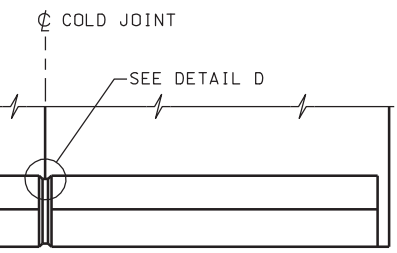


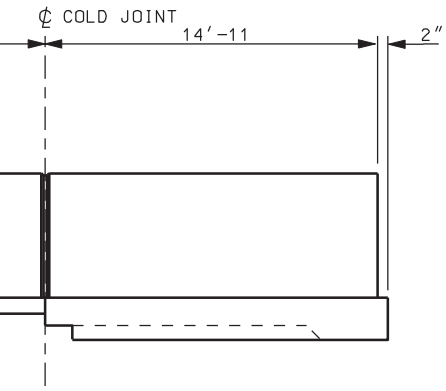


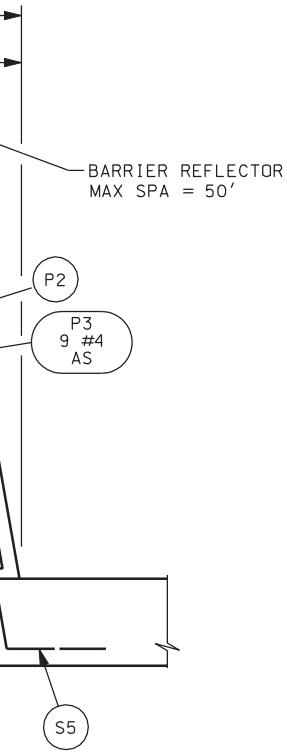


A-A

## NOTES

1. PROVIDE 2″ MIN COVER TO REINFORCING STEEL UNLESS NOTED OTHERWISE.
2. PLACE CONTRACTION JOINT ON SIDES AND TOP OF PARAPET.
3. EXTEND SEALANT AND FOAM BACKER ROD FROM DECK TO TOP OF PARAPET ON THE INSIDE PARAPET FACE AND ACROSS TOP OF PARAPET.

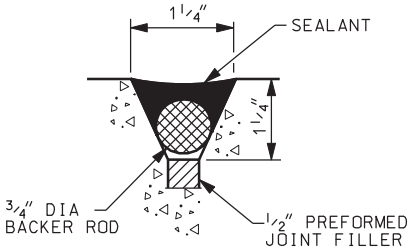


DETAIL D

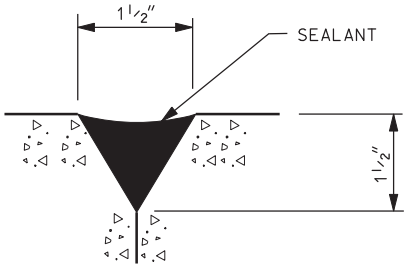


DETAIL C

## CONCRETE QUANTITIES

| | |
|---|---|
| PARAPET NB & SB | 46.7 CU YDS |

| NO. | DATE | BY | REMARKS |
|---|---|---|---|
| | | | |

REVISIONS

UTAH DEPARTMENT OF TRANSPORTATION
SALT LAKE CITY, UTAH
STRUCTURES DIVISION

URS

DESIGN PH 12/04 CHECK GTD 12/04
DRAWN DKH 12/04 CHECK PH 12/04
QUANT. CDT 12/04 CHECK CEL 12/04

APPROVAL RECOMM. DATE SENIOR DESIGN ENGR.
APPROVED FOR USE BY UDOT DATE UDOT BRIDGE ENGR.

I-15; CORRIDOR IN UTAH COUNTY
400 NORTH OVERPASS IN OREM
PARAPET DETAILS
PROJECT NUMBER SP-15-6(52)241

UTAH
COUNTY

F-14W2
DRG. NO.

SHT. 24 OF 28

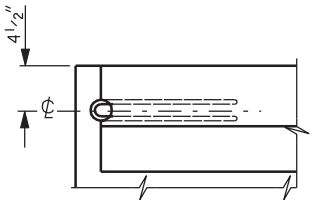


PLAN

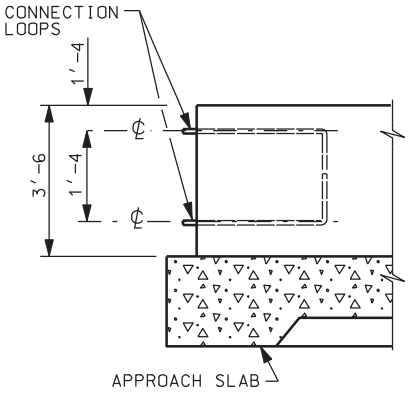


ELEVATION

STANDARD END DETAILS

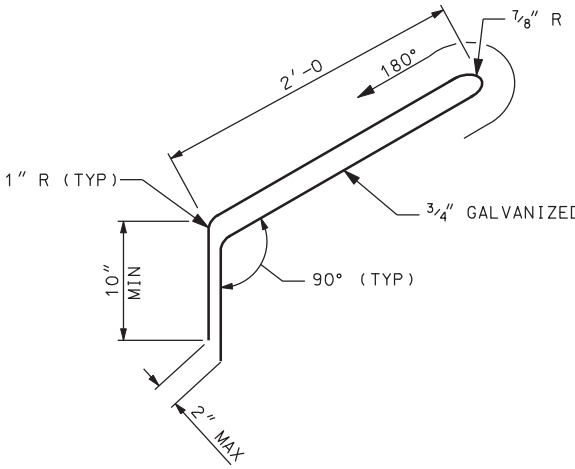


CONNECTION LOOP DETAIL

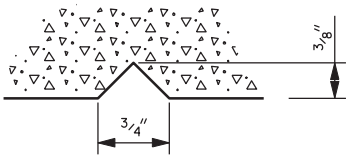


TYPICAL SECTION

THRU STRUCTURE NUMBER

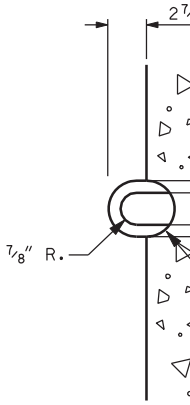


CON

DGN File:IP_PWPcdms1717\4433_F14.25.dgn
02-MAY-2005

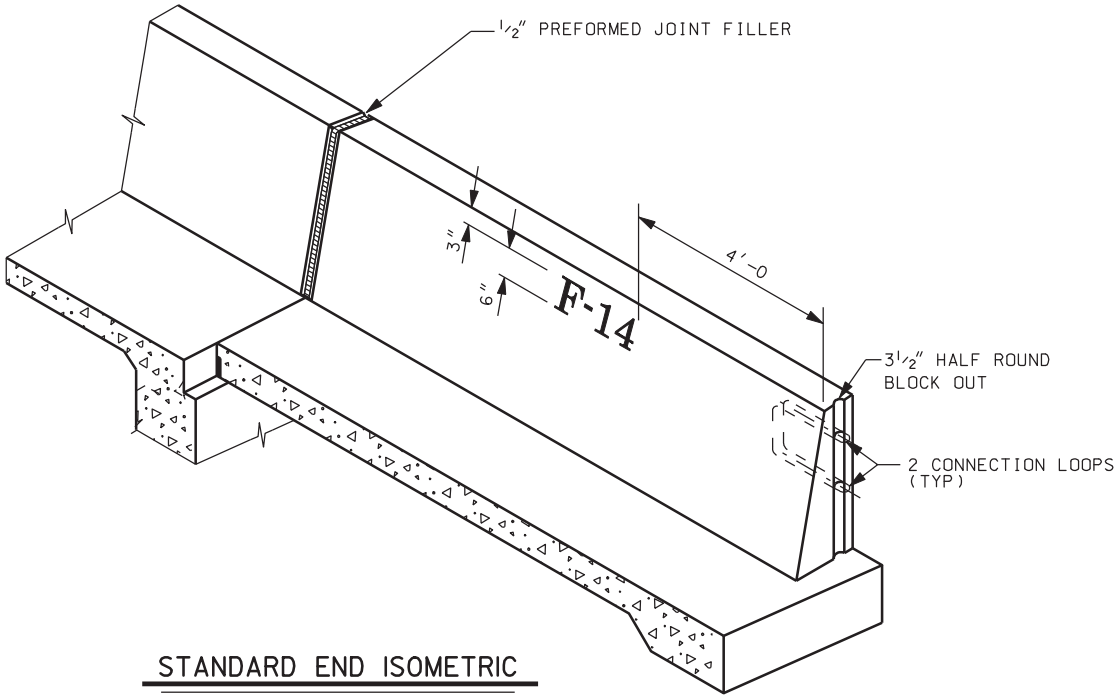


STANDARD END ISOMETRIC

O STEEL BAR

8"

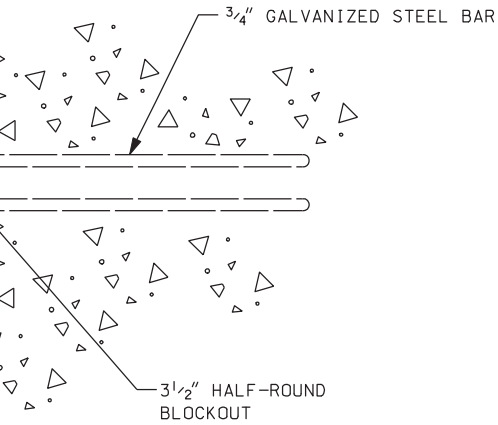


NECTION BAR END DETAIL

## NOTES

1. INSTALL BOTH CONNECTION LOOPS AND THREADED ANCHORS AT ALL PARAPET ENDS.
2. CONNECTION LOOPS NOT INCLUDED IN REINFORCING STEEL SCHEDULE.
3. LOCATE DRAWING NUMBER ON RIGHT-HAND SIDE OF APPROACH PARAPET.
4. SEE ROADWAY DETAILS SHEET DT-08 FOR CONNECTION DETAILS OF APPROACH SLAB PARAPET TO ROADWAY BARRIER.

| NO. | DATE | BY | REMARKS |
|---|---|---|---|

REVISIONS

UTAH DEPARTMENT OF TRANSPORTATION
SALT LAKE CITY, UTAH
STRUCTURES DIVISION

URS

DESIGN PH 12/04 CHECK GTD 12/04
DRAWN DKH 12/04 CHECK PH 12/04
QUANT. CDT 12/04 CHECK CEL 12/04

APPROVAL RECOMM. DATE SENIOR DESIGN ENGR.
APPROVED FOR USE BY UDOT DATE UDOT BRIDGE ENGR.

I-15; CORRIDOR IN UTAH COUNTY
400 NORTH OVERPASS IN OREM
PARAPET END DETAILS

PROJECT NUMBER SP-15-6(52)241

UTAH
COUNTY

F-14W2
DRG. NO.

SHT. 25 OF 28

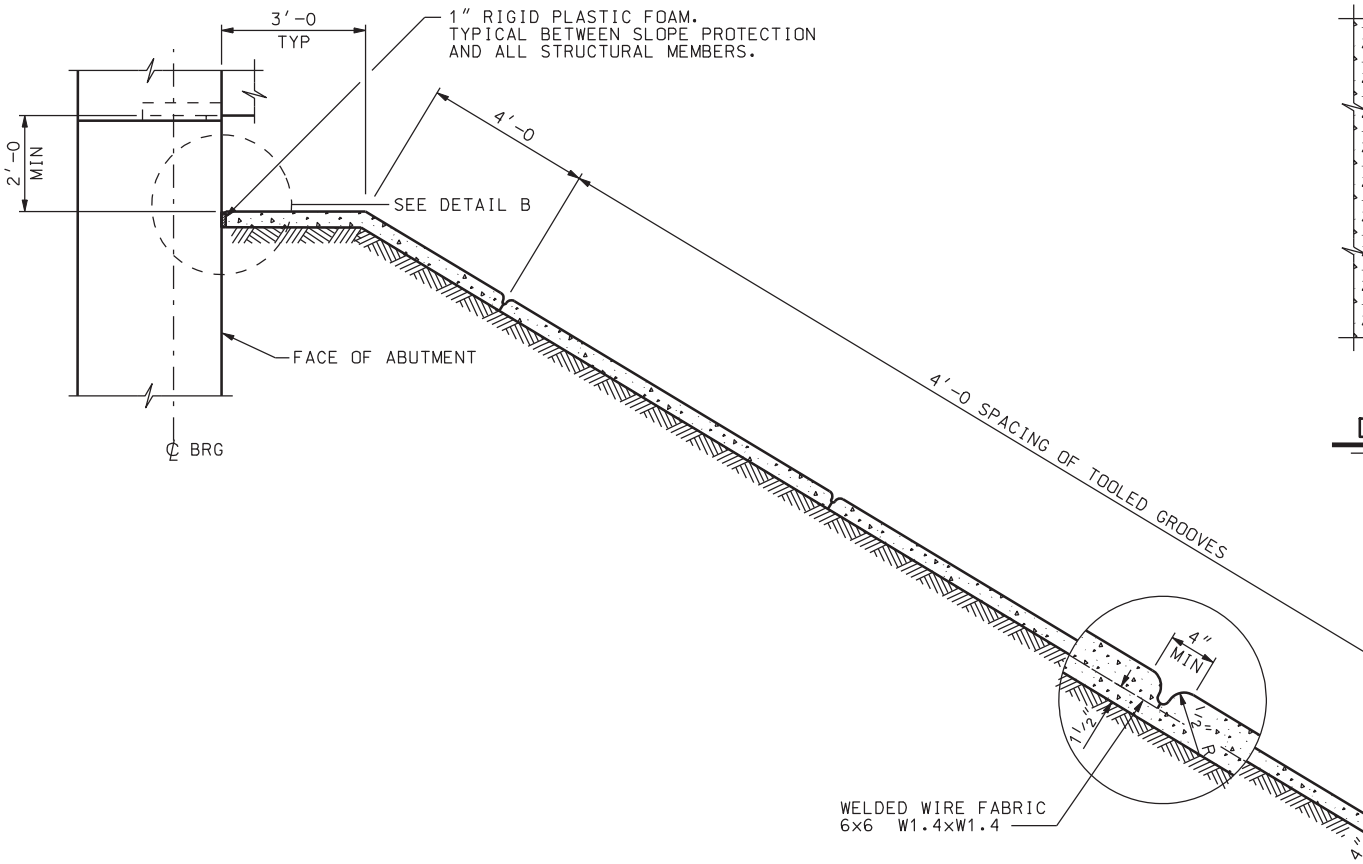


SEE DE

## SLOPE PROTECTION ELEVATION

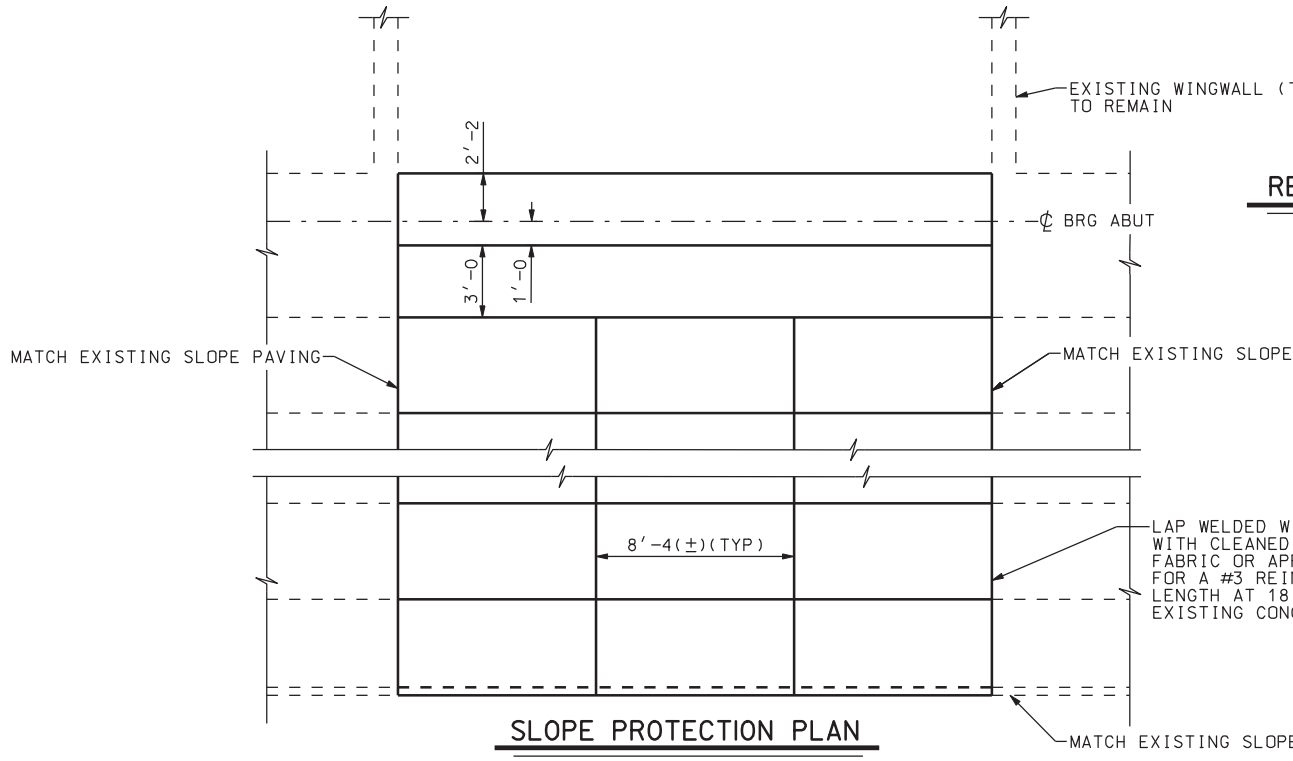


## SLOPE PROTECTION PLAN

DGN File: IP_PWPsdms1717\4433_F14.26.dgn

02-MAY-2005

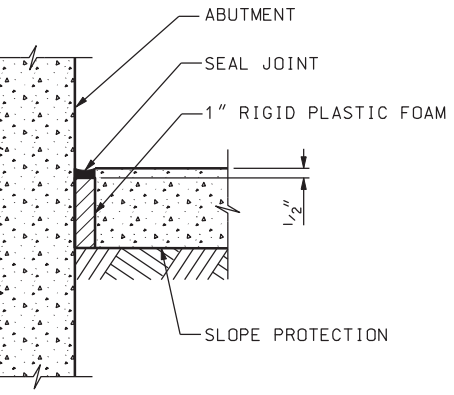


DETAIL B

## NOTES

1. QUANTITIES GIVEN FOR CONCRETE SLOPE PROTECTION ARE ESTIMATES ONLY AND ARE BASED ON THE EXPOSED FINISHED CONCRETE SURFACE AREA.
2. LOCATION OF THE TOE OF SLOPE IS APPROXIMATE ONLY AND SHALL BE MODIFIED TO MEET FIELD CONDITIONS AS DIRECTED BY THE ENGINEER.
3. JUST PRIOR TO FINAL INSPECTION, SEAL JOINTS BETWEEN THE CONCRETE SLOPE PROTECTION AND ALL STRUCTURAL MEMBERS.
4. USE CLASS A (AE) FOR ALL SLOPE PROTECTION.
5. CUT-OFF WALL (1'-6 x 4" THICK) IS CONTINUOUS AROUND PERIMETER OF SLOPE PROTECTION EXCEPT AT THE ABUTMENT FOOTING. PAYMENT FOR CUT-OFF WALLS SHALL BE INCLUDED IN THE CONTRACT PRICE PER SQUARE YARD FOR CONCRETE SLOPE PROTECTION.
6. MATCH EXISTING CONCRETE SLOPE PAVING. SEE EXISTING BRIDGE PLANS F-14W FOR MORE DETAILS.
7. REMOVAL OF EXISTING CONCRETE SLOPE PROTECTION FOR SUBSTRUCTURE CONSTRUCTION IS INCIDENTAL TO THE COST OF CONCRETE SLOPE PAVING.

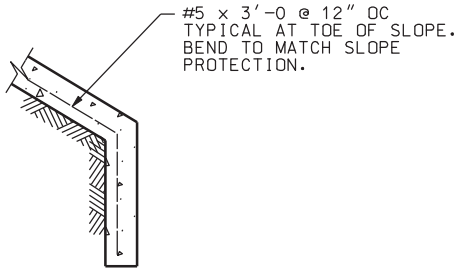


DETAIL A

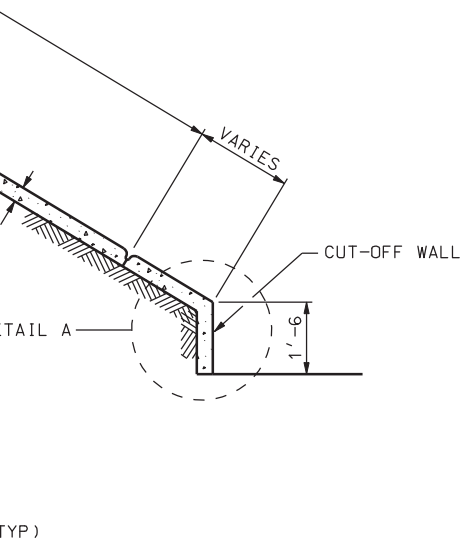


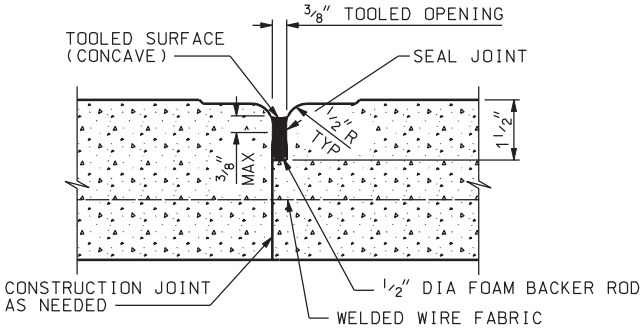


VERTICAL JOINT DETAIL

EPLACE CONCRETE SLOPE PROTECTION QUANTITIES

| | |
|---|---|
| CONCRETE ABUT #1 AND ABUT #4 | 192.0 SQ YDS |

PAVING

IRE FABRIC 1'-2 MIN
EXISTING WELDED WIRE
PROVED EPOXY ANCHORAGE
NFORCING STEEL BAR 1'-6 IN
", DEVELOP BAR 4" MIN INTO
CRETE SLOPE PROTECTION (TYP).

E PAVING

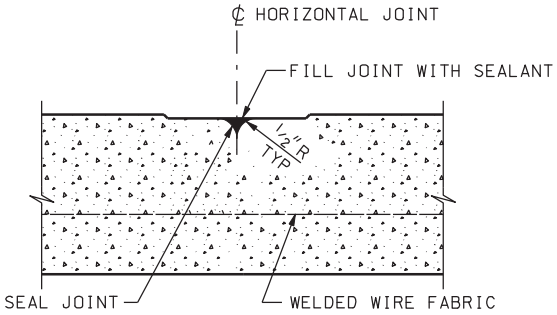


HORIZONTAL JOINT DETAIL

| NO. | DATE | BY | REMARKS |
|---|---|---|---|
| | | | |

REVISIONS

UTAH DEPARTMENT OF TRANSPORTATION
SALT LAKE CITY, UTAH
STRUCTURES DIVISION

URS

DESIGN PH 12/04 CHECK GTD 12/04 CHECK PH 12/04 CHECK CEL 12/04
DRAWN DKH 12/04 QUANT. CDT 12/04

APPROVAL RECOMM. DATE SENIOR DESIGN ENGR.
APPROVED FOR USE BY UDOT DATE UDOT BRIDGE ENGR.

I-15; CORRIDOR IN UTAH COUNTY
400 NORTH OVERPASS IN OREM
CONCRETE SLOPE PROTECTION
PROJECT NUMBER SP-15-6(52)241

UTAH
COUNTY

F-14W2
DRG. NO.

SHT. 26 OF 28

| MARK | LOCATION | SIZE | NO. | LENGTH | TOTAL LENGTH | BAR TYPE |
|---|---|---|---|---|---|---|
| A1 | ABUTMENT | 7 | 48 | 9′-6 | 456′-0 | 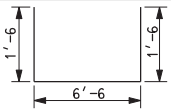  |
| A2 | ABUTMENT | 7 | 32 | 10′-5 | 333′-4 | |
| A3 | ABUTMENT | 5 | 48 | 10′-5 | 500′-0 | |
| A4 | ABUTMENT | 5 | 48 | 9′-6 | 456′-0 | 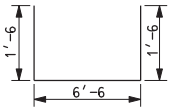  |
| A5 | ABUTMENT | 7 | 48 | 8′-10 | 424′-0 | 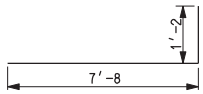  |
| A6 | ABUTMENT | 5 | 48 | 7′-8 | 368′-0 | |
| A7 | ABUTMENT | 7 | 56 | 12′-1 | 676′-8 | |
| A8 | ABUTMENT | 5 | 48 | 6′-4 | 304′-0 | |
| A9 | ABUTMENT | 5 | 56 | 4′-6 | 252′-0 | 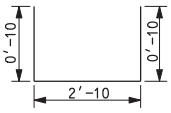  |
| A10 | ABUTMENT | 5 | 88 | 12′-3 | 1,078′-0 | |
| A11 | ABUTMENT | 5 | 88 | 4′-3 | 374′-0 | |
| A12 | ABUTMENT | 5 | 32 | 4′-3 | 136′-0 | |
| A13 | ABUTMENT | 7 | 32 | 4′-7 | 146′-8 | |
| A14 | ABUTMENT | 5 | 16 | 4′-3 | 68′-0 | |
| A15 | ABUTMENT | 5 | 32 | 3′-8 | 117′-4 | 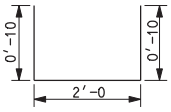  |
| A16 | ABUTMENT | 5 | 8 | 9′-2 | 73′-4 | |
| AD1 | ABUT DIAPHR. | 5 | 48 | 9′-11 | 476′-0 | HOOK DIAMETER $\phi$ = 0′-2 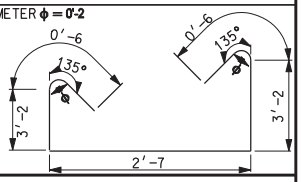  |
| AD2 | ABUT DIAPHR. | 5 | 80 | 4′-1 | 326′-8 | |
| AD3 | ABUT DIAPHR. | 5 | 24 | 14′-7 | 350′-0 | |
| AD4 | ABUT DIAPHR. | 5 | 48 | 4′-3 | 204′-0 | 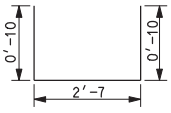  |
| AD5 | ABUT DIAPHR. | 5 | 320 | 2′-2 | 693′-4 | |
| AD6 | ABUT DIAPHR. | 5 | 16 | 5′-3 | 84′-0 | 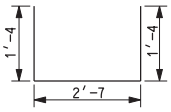  |
| AD7 | ABUT DIAPHR. | 5 | 48 | 3′-0 | 144′-0 | A: 2′-0 B: 1′-0 |
| AD8 | ABUT DIAPHR. | 5 | 200 | 3′-6 | 700′-0 | A: 2′-6 B: 1′-0 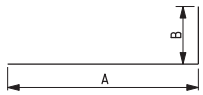  |
| AD9 | ABUT DIAPHR. | 4 | 160 | 1′-6 | 240′-0 | |
| AD10 | ABUT DIAPHR. | 5 | 16 | 4′-8 | 74′-8 | |
| AD11 | ABUT DIAPHR. | 5 | 80 | 1′-3 | 100′-0 | |
| AD12 | ABUT DIAPHR. | 4 | 40 | 1′-2 | 46′-8 | |
| B1 | BENT CAP | 9 | 16 | 17′-2 | 274′-8 | 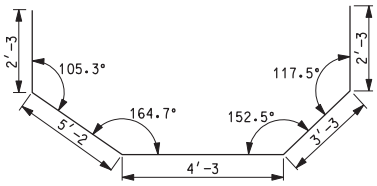  |
| B2 | BENT CAP | 6 | 32 | 12′-2 | 389′-4 | |

| MARK | LOCATION | SIZE | NO. | LENGTH | TOTAL LENGTH |
|---|---|---|---|---|---|
| B3 | BENT CAP | 9 | 32 | 16′-6 | 528′ |
| B4 | BENT CAP | 6 | 8 | 8′-8 | 69′- |
| B5 | BENT CAP | 5 | 44 | 11′-6 | 506′ |
| B6 | BENT CAP | 5 | 4 | 11′-2 | 44′- |
| B7 | BENT CAP | 5 | 4 | 10′-8 | 42′- |
| B8 | BENT CAP | 5 | 4 | 10′-4 | 41′- |
| B9 | BENT CAP | 5 | 4 | 9′-10 | 39′- |
| B10 | BENT CAP | 5 | 4 | 9′-4 | 37′- |
| B11 | BENT CAP | 5 | 4 | 9′-0 | 36′- |
| B12 | BENT CAP | 5 | 4 | 8′-6 | 34′- |
| B13 | BENT CAP | 5 | 4 | 11′-2 | 44′- |
| B14 | BENT CAP | 5 | 4 | 11′-0 | 44′- |
| B15 | BENT CAP | 5 | 4 | 10′-8 | 42′- |
| B16 | BENT CAP | 5 | 4 | 10′-6 | 42′- |
| B17 | BENT CAP | 5 | 4 | 10′-2 | 40′- |
| B18 | BENT CAP | 5 | 4 | 10′-0 | 40′- |
| B19 | BENT CAP | 5 | 4 | 9′-8 | 38′- |
| B20 | BENT CAP | 5 | 4 | 9′-6 | 38′- |
| B21 | BENT CAP | 5 | 4 | 9′-2 | 36′- |
| B22 | BENT CAP | 5 | 4 | 9′-0 | 36′- |
| B23 | BENT CAP | 5 | 4 | 8′-8 | 34′- |
| B24 | BENT CAP | 5 | 4 | 8′-6 | 34′- |
| B25 | BENT CAP | 9 | 16 | 3′-4 | 53′- |
| B26 | BENT CAP | 5 | 52 | 2′-6 | 130′ |
| B27 | BENT CAP | 5 | 88 | 4′-8 | 410′ |
| B28 | BENT CAP | 5 | 8 | 4′-6 | 36′- |
| B29 | BENT CAP | 5 | 8 | 4′-3 | 34′- |
| B30 | BENT CAP | 5 | 8 | 4′-1 | 32′- |
| B31 | BENT CAP | 5 | 8 | 3′-10 | 30′- |
| B32 | BENT CAP | 5 | 8 | 3′-7 | 28′- |
| B33 | BENT CAP | 5 | 8 | 3′-5 | 27′- |
| B34 | BENT CAP | 5 | 8 | 3′-2 | 25′- |
| B35 | BENT CAP | 5 | 8 | 4′-6 | 36′- |
| B36 | BENT CAP | 5 | 8 | 4′-5 | 35′- |
| B37 | BENT CAP | 5 | 8 | 4′-3 | 34′- |
| B38 | BENT CAP | 5 | 8 | 4′-2 | 33′- |
| B39 | BENT CAP | 5 | 8 | 4′-0 | 32′- |
| B40 | BENT CAP | 5 | 8 | 3′-11 | 31′- |
| B41 | BENT CAP | 5 | 8 | 3′-9 | 30′- |
| B42 | BENT CAP | 5 | 8 | 3′-8 | 29′- |
| B43 | BENT CAP | 5 | 8 | 3′-6 | 28′- |
| B44 | BENT CAP | 5 | 8 | 3′-5 | 27′- |
| B45 | BENT CAP | 5 | 8 | 3′-3 | 26′- |
| B46 | BENT CAP | 5 | 8 | 3′-2 | 25′- |
| B47 | BENT CAP | 6 | 8 | 11′-1 | 88′- |
| B48 | BENT CAP | 6 | 8 | 6′-1 | 48′- |
| B49 | BENT CAP | 5 | 120 | 4′-2 | 500′ |

| L TH | BAR TYPE |
|---|---|
| -0 | 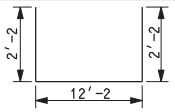 |



| -4 | | | | | | | | |
|---|---|---|---|---|---|---|---|---|
| | A | B | C | D | E | F | G | H |
| -0 | 3'-2 | 3'-8 | 3'-8 | 0'-6 | 0'-6 | 135 | 135 | 0'-2 |
| -8 | 3'-2 | 3'-6 | 3'-6 | 0'-6 | 0'-6 | 135 | 135 | 0'-2 |
| -8 | 3'-2 | 3'-3 | 3'-3 | 0'-6 | 0'-6 | 135 | 135 | 0'-2 |
| -4 | 3'-2 | 3'-1 | 3'-1 | 0'-6 | 0'-6 | 135 | 135 | 0'-2 |
| -4 | 3'-2 | 2'-10 | 2'-10 | 0'-6 | 0'-6 | 135 | 135 | 0'-2 |
| -4 | 3'-2 | 2'-7 | 2'-7 | 0'-6 | 0'-6 | 135 | 135 | 0'-2 |
| -0 | 3'-2 | 2'-5 | 2'-5 | 0'-6 | 0'-6 | 135 | 135 | 0'-2 |
| -0 | 3'-2 | 2'-2 | 2'-2 | 0'-6 | 0'-6 | 135 | 135 | 0'-2 |
| -8 | 3'-2 | 3'-6 | 3'-6 | 0'-6 | 0'-6 | 135 | 135 | 0'-2 |
| -0 | 3'-2 | 3'-5 | 3'-5 | 0'-6 | 0'-6 | 135 | 135 | 0'-2 |
| -8 | 3'-2 | 3'-3 | 3'-3 | 0'-6 | 0'-6 | 135 | 135 | 0'-2 |
| -0 | 3'-2 | 3'-2 | 3'-2 | 0'-6 | 0'-6 | 135 | 135 | 0'-2 |
| -8 | 3'-2 | 3'-0 | 3'-0 | 0'-6 | 0'-6 | 135 | 135 | 0'-2 |
| -0 | 3'-2 | 2'-11 | 2'-11 | 0'-6 | 0'-6 | 135 | 135 | 0'-2 |
| -8 | 3'-2 | 2'-9 | 2'-9 | 0'-6 | 0'-6 | 135 | 135 | 0'-2 |
| -0 | 3'-2 | 2'-8 | 2'-8 | 0'-6 | 0'-6 | 135 | 135 | 0'-2 |
| -8 | 3'-2 | 2'-6 | 2'-6 | 0'-6 | 0'-6 | 135 | 135 | 0'-2 |
| -0 | 3'-2 | 2'-5 | 2'-5 | 0'-6 | 0'-6 | 135 | 135 | 0'-0 |
| -8 | 3'-2 | 2'-3 | 2'-3 | 0'-6 | 0'-6 | 135 | 135 | 0'-0 |
| -0 | 3'-2 | 2'-2 | 2'-2 | 0'-6 | 0'-6 | 135 | 135 | 0'-0 |

HOOK DIAMETER $\phi$ = H

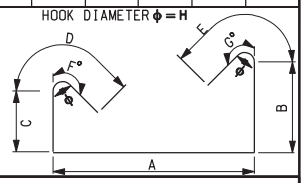



| -4 | | | | | |
|---|---|---|---|---|---|
| -0 | | | | | |
| | A | B | C | D | E |
| -8 | 3'-8 | 0'-6 | 0'-6 | 135 | 0'-2 |
| -0 | 3'-6 | 0'-6 | 0'-6 | 135 | 0'-2 |
| -0 | 3'-3 | 0'-6 | 0'-6 | 135 | 0'-2 |
| -8 | 3'-1 | 0'-6 | 0'-6 | 135 | 0'-2 |
| -8 | 2'-10 | 0'-6 | 0'-6 | 135 | 0'-2 |
| -8 | 2'-7 | 0'-6 | 0'-6 | 135 | 0'-2 |
| -4 | 2'-5 | 0'-6 | 0'-6 | 135 | 0'-2 |
| -4 | 2'-2 | 0'-6 | 0'-6 | 135 | 0'-2 |
| -0 | 3'-6 | 0'-6 | 0'-6 | 135 | 0'-2 |
| -4 | 3'-5 | 0'-6 | 0'-6 | 135 | 0'-2 |
| -0 | 3'-3 | 0'-6 | 0'-6 | 135 | 0'-2 |
| -4 | 3'-2 | 0'-6 | 0'-6 | 135 | 0'-2 |
| -0 | 3'-0 | 0'-6 | 0'-6 | 135 | 0'-2 |
| -4 | 2'-11 | 0'-6 | 0'-6 | 135 | 0'-2 |
| -0 | 2'-9 | 0'-6 | 0'-6 | 135 | 0'-2 |
| -4 | 2'-8 | 0'-6 | 0'-6 | 135 | 0'-2 |
| -0 | 2'-6 | 0'-6 | 0'-6 | 135 | 0'-2 |
| -4 | 2'-5 | 0'-6 | 0'-6 | 135 | 0'-2 |
| -0 | 2'-3 | 0'-6 | 0'-6 | 135 | 0'-2 |
| -4 | 2'-2 | 0'-6 | 0'-6 | 135 | 0'-2 |

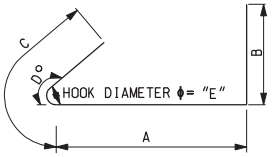



| -8 | |
|---|---|
| -8 | |
| -0 | 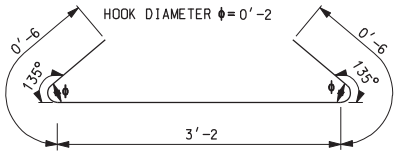 |



| MARK | LOCATION | SIZE | NO. | LENGTH | TOTAL LENGTH | BAR TYPE |
|---|---|---|---|---|---|---|
| D1 | BENT DIAPHR. | 5 | 48 | 12'-2 | 584'-0 | 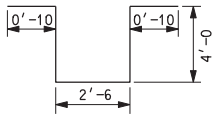 |
| D2 | BENT DIAPHR. | 5 | 144 | 3'-2 | 456'-0 | |
| D3 | BENT DIAPHR. | 5 | 8 | 12'-0 | 96'-0 | |
| D4 | BENT DIAPHR. | 5 | 48 | 4'-2 | 200'-0 | 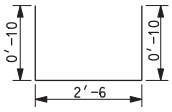 |
| D5 | BENT DIAPHR. | 5 | 800 | 2'-10 | 2,266'-8 | |
| D6 | BENT DIAPHR. | 5 | 160 | 2'-4 | 373'-4 | |
| D7 | BENT DIAPHR. | 5 | 160 | 4'-6 | 720'-0 | 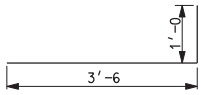 |
| D8 | BENT DIAPHR. | 5 | 160 | 1'-0 | 160'-0 | |
| D9 | BENT DIAPHR. | 5 | 16 | 4'-0 | 64'-0 | 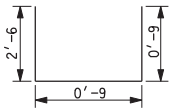 |
| D10 | BENT DIAPHR. | 5 | 170 | 1'-3 | 150'-0 | |
| D11 | BENT DIAPHR. | 5 | 10 | 1'-1 | 10'-10 | |
| D12 | BENT DIAPHR. | 5 | 10 | 3'-7 | 35'-10 | |
| D13 | BENT DIAPHR. | 5 | 10 | 0'-8 | 6'-8 | |
| D14 | BENT DIAPHR. | 5 | 30 | 2'-0 | 60'-0 | |
| D15 | BENT DIAPHR. | 5 | 30 | 2'-9 | 82'-6 | |
| D16 | BENT DIAPHR. | 5 | 16 | 4'-8 | 74'-8 | |
| F1 | BENT FOUND. | 10 | 112 | 12'-8 | 1,418'-8 | 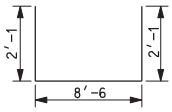 |
| F2 | BENT FOUND. | 8 | 128 | 12'-8 | 1,621'-4 | 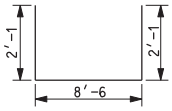 |
| F3 | BENT FOUND. | 5 | 432 | 3'-1 | 1,332'-0 | 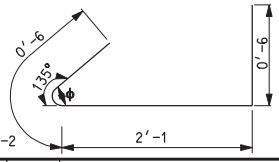 |



| | | | | | | A | B | C |
|---|---|---|---|---|---|---|---|---|
| C1 | BENT2 COLUMN | 11 | 4 | 29'-4 | 117'-4 | 2'-8 | 24'-0 | 2'-8 |
| C1 | BENT3 COLUMN | 11 | 4 | 29'-2 | 116'-8 | 2'-8 | 23'-10 | 2'-8 |

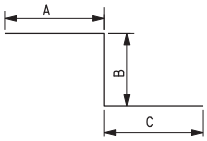



| | | | | | | A | B | C |
|---|---|---|---|---|---|---|---|---|
| C2 | BENT2 COLUMN | 11 | 8 | 29'-4 | 234'-8 | 2'-8 | 24'-0 | 2'-8 |
| C2 | BENT3 COLUMN | 11 | 8 | 29'-2 | 233'-4 | 2'-8 | 23'-10 | 2'-8 |

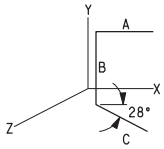



| | | | | | | |
|---|---|---|---|---|---|---|
| C3 | BENT2 COLUMN | 11 | 4 | 29'-4 | 117'-4 | 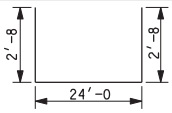 |
| C3 | BENT3 COLUMN | 11 | 4 | 29'-2 | 116'-8 | 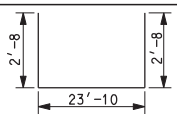 |





| NO. | DATE | BY | REMARKS |
|---|---|---|---|
| | | | |

REVISIONS

UTAH DEPARTMENT OF TRANSPORTATION
SALT LAKE CITY, UTAH
STRUCTURES DIVISION

URS

UDOT

DESIGN PH 12/04 CHECK GTD 12/04
DRAWN DKH 12/04 CHECK PH 12/04
QUANT. CDT 12/04 CHECK CEL 12/04

APPROVAL RECOMM. DATE SENIOR DESIGN ENGR.
APPROVED FOR USE BY UDOT DATE UDOT BRIDGE ENGR.

I-15; CORRIDOR IN UTAH COUNTY
400 NORTH OVERPASS IN OREM
REINFORCING SCHEDULE 1

PROJECT NUMBER SP-15-6(52)241

UTAH
COUNTY

F-14W2
DRG. NO.

SHT. 27 OF 28

| MARK | LOCATION | SIZE | NO. | LENGTH | TOTAL LENGTH | BAR TYPE |
|---|---|---|---|---|---|---|
| C4 | BENT2 COLUMN | 4 | 8 | 24′-0 | 192′-0 | |
| C4 | BENT3 COLUMN | 4 | 8 | 23′-10 | 190′-8 | |
| C5 | BENT2 COLUMN | 5 | 2 | 609′-2 | 1,218′-4 | |

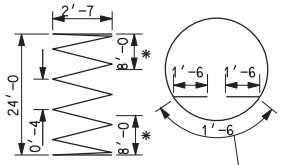


OPTIONAL SPLICE WITH 135° END HOOK

* LAP SPLICE NOT PERMITTED

1½ TURNS TYP. TOP AND BOTTOM

| | | | | | | |
|---|---|---|---|---|---|---|
| C5 | BENT3 COLUMN | 5 | 2 | 605′-1 | 1,210′-3 | |

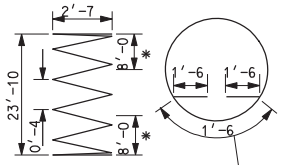


OPTIONAL SPLICE WITH 135° END HOOK

* LAP SPLICE NOT PERMITTED

1½ TURNS TYP. TOP AND BOTTOM

| | | | | | | |
|---|---|---|---|---|---|---|
| C6 | BENT COLUMN | 4 | 144 | 8′-0 | 1,152′-0 | |

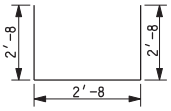


| | | | | | | A | B | C |
|---|---|---|---|---|---|---|---|---|
| C7 | BENT2 COLUMN | 11 | 8 | 29′-4 | 234′-8 | 2′-8 | 24′-0 | 2′-8 |
| C7 | BENT3 COLUMN | 11 | 8 | 29′-2 | 233′-4 | 2′-8 | 23′-10 | 2′-8 |

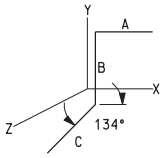


| | | | | | | |
|---|---|---|---|---|---|---|
| ID1 | INT. DIAPH. | 4 | 80 | 6′-8 | 533′-4 | |

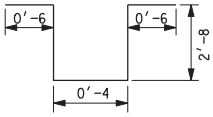


| | | | | | | |
|---|---|---|---|---|---|---|
| ID2 | INT. DIAPH. | 4 | 40 | 3′-2 | 126′-8 | |

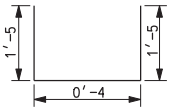


| | | | | | | |
|---|---|---|---|---|---|---|
| ID3 | INT. DIAPH. | 6 | 40 | 5′-2 | 206′-8 | |
| ID4 | INT. DIAPH. | 6 | 20 | 11′-5 | 228′-4 | |
| ID5 | INT. DIAPH. | 6 | 40 | 2′-6 | 100′-0 | |
| S1 | DECK | 5 | 550 | 14′-9 | 8,112′-6 | |
| S2 | DECK | 5 | 32 | 143′-9 | 4,600′-0 | |

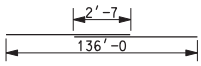


3 SPLICE(S) REQ'D

| | | | | | | |
|---|---|---|---|---|---|---|
| S3 | DECK | 6 | 34 | 145′-3 | 4,938′-6 | |

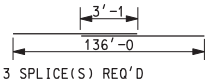


3 SPLICE(S) REQ'D

| | | | | | | |
|---|---|---|---|---|---|---|
| S4 | DECK | 4 | 294 | 3′-7 | 1,053′-6 | |

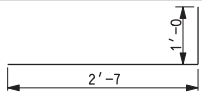


| | | | | | | |
|---|---|---|---|---|---|---|
| S5 | DECK | 4 | 294 | 4′-2 | 1,225′-0 | |

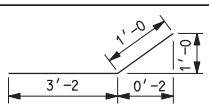


| | | | | | | |
|---|---|---|---|---|---|---|
| S6 | DECK | 6 | 56 | 56′-2 | 3,145′-4 | |
| S7 | DECK | 5 | 60 | 3′-0 | 180′-0 | |
| S8 | DECK | 5 | 270 | 6′-0 | 1,620′-0 | |
| AS1 | AP. SLAB | 5 | 128 | 14′-10 | 1,898′-8 | |

| MARK | LOCATION | SIZE | NO. | LENGTH | TOTA LENGT |
|---|---|---|---|---|---|
| AS2 | AP. SLAB | 5 | 64 | 14′-9 | 944′ |
| AS3 | AP. SLAB | 7 | 64 | 14′-9 | 944′ |
| AS4 | AP. SLAB | 6 | 12 | 14′-10 | 178′ |
| AS5 | AP. SLAB | 4 | 128 | 6′-2 | 789′ |
| AS6 | AP. SLAB | 7 | 12 | 14′-9 | 177′ |
| AS7 | AP. SLAB | 4 | 104 | 3′-7 | 372′ |
| AS8 | AP. SLAB | 4 | 104 | 4′-2 | 433′ |
| CB1 | CATCH BASIN | 5 | 12 | 9′-10 | 118′ |
| CB2 | CATCH BASIN | 5 | 4 | 13′-0 | 52′ |
| CB3 | CATCH BASIN | 5 | 4 | 2′-8 | 10′ |
| P1 | PARAPET | 4 | 398 | 3′-2 | 1,260 |
| P2 | PARAPET | 4 | 398 | 3′-10 | 1,525 |
| P3 | PARAPET | 4 | 18 | 143′-6 | 2,583′ |
| P4 | PARAPET | 4 | 36 | 14′-9 | 531′ |

DGN File:IP_PWPcdns1717\4433_F14.28.dgn
02-MAY-2005

| L TH | BAR TYPE |
|---|---|
| -0 | |
| -0 | |
| -0 | |
| -4 | 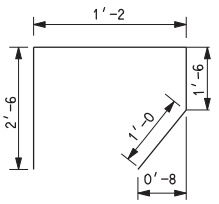 |
| -0 | |
| -8 | 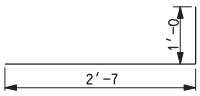 |
| -4 | 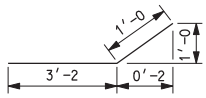 |
| -0 | 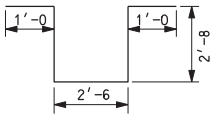 |
| -0 | 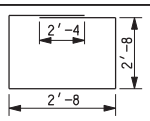 |
| -8 | |
| '-4 | |
| '-8 | 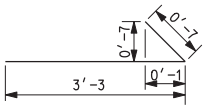 |
| 0 | 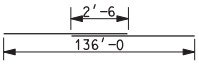 3 SPLICE(S) REQ'D |
| -0 | |

SUMMARY OF COATED BARS

| | | | | | | | |
|---|---|---|---|---|---|---|---|
| 12,255'-2 | OF NUMBER | 4 | BARS AT | 0.668 | LBS/FT = | 8,186.5 | LBS |
| 36,455'-5 | OF NUMBER | 5 | BARS AT | 1.043 | LBS/FT = | 38,023.0 | LBS |
| 9,392'-10 | OF NUMBER | 6 | BARS AT | 1.502 | LBS/FT = | 14,108.0 | LBS |
| 3,157'-8 | OF NUMBER | 7 | BARS AT | 2.044 | LBS/FT = | 6,454.3 | LBS |
| 1,621'-4 | OF NUMBER | 8 | BARS AT | 2.670 | LBS/FT = | 4,329.0 | LBS |
| 856'-0 | OF NUMBER | 9 | BARS AT | 3.400 | LBS/FT = | 2,910.4 | LBS |
| 1,418'-8 | OF NUMBER | 10 | BARS AT | 4.303 | LBS/FT = | 6,104.5 | LBS |
| 1,404'-0 | OF NUMBER | 11 | BARS AT | 5.313 | LBS/FT = | 7,459.5 | LBS |
| | | | | | TOTAL | 87,575.1 | LBS |

NOTES:

ALL BARS ARE COATED

BAR SIZES ARE U.S. UNITS.

REINFORCING STEEL DIMENSIONS ARE OUT TO OUT OF BAR UNLESS OTHERWISE SPECIFIED.

SPLICES MAY BE OMITTED AT FABRICATORS OPTION...HOWEVER, IN SUCH CASE, FABRICATOR ASSUMES RESPONSIBILITY FOR FIT.

| NO. | DATE | BY | REMARKS |
|---|---|---|---|
| | | | |

REVISIONS

UTAH DEPARTMENT OF TRANSPORTATION
SALT LAKE CITY, UTAH
STRUCTURES DIVISION

URS

DESIGN PH 12/04 CHECK GTD 12/04
DRAWN DKH 12/04 CHECK PH 12/04
QUANT. CDT 12/04 CHECK CEL 12/04

APPROVAL RECOMM. DATE SENIOR DESIGN ENGR.
APPROVED FOR USE BY UDOT DATE UDOT BRIDGE ENGR.

I-15; CORRIDOR IN UTAH COUNTY
400 NORTH OVERPASS IN OREM
REINFORCING SCHEDULE 2

PROJECT NUMBER SP-15-6(52)241

UTAH
COUNTY

F-14W2
DRG. NO.

SHT. 28 OF 28

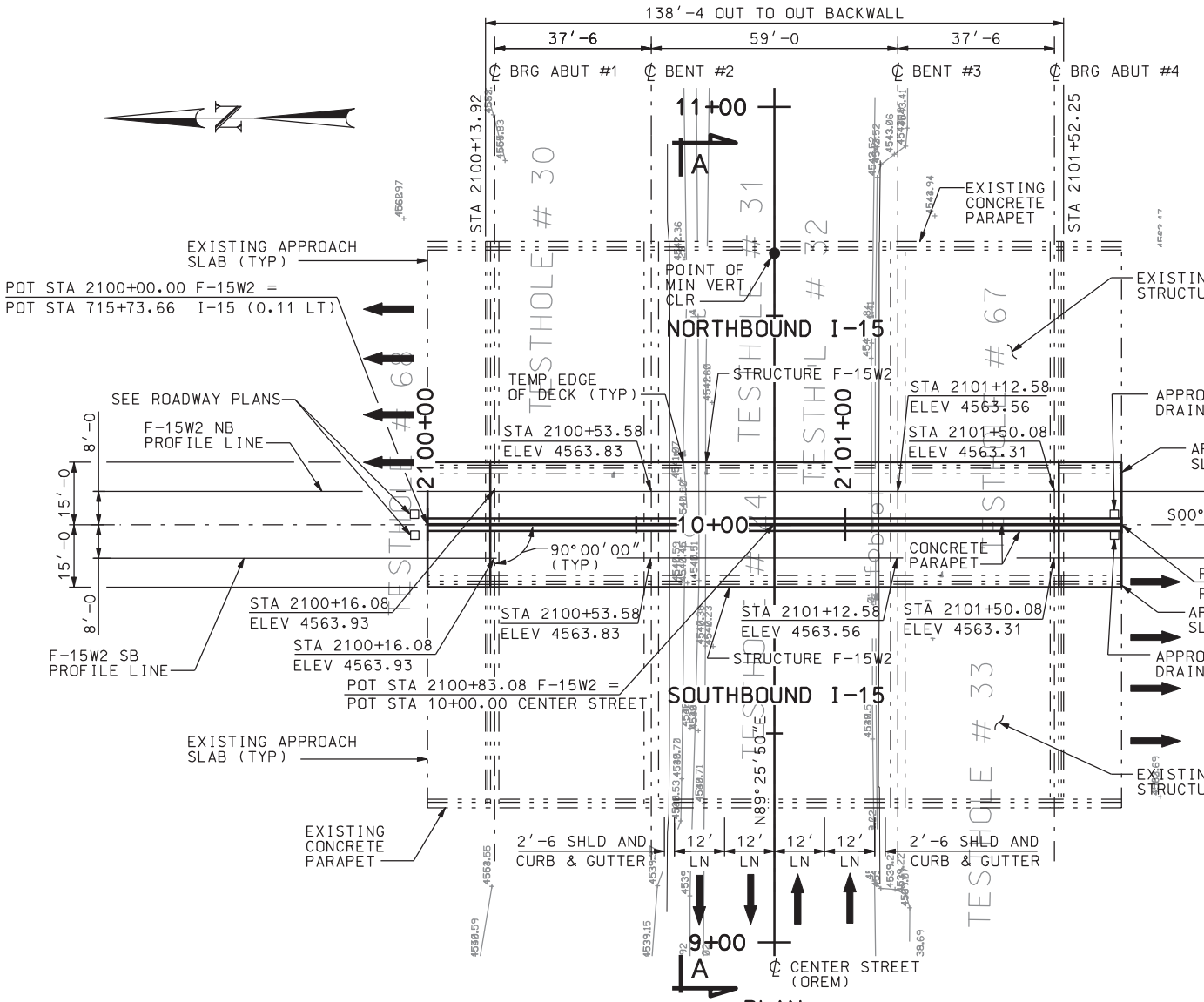


PLAN

## INDEX OF SHEETS


1. SITUATION & LAYOUT 1
2. SITUATION & LAYOUT 2
3. SOIL DATA SHEET 1
4. SOIL DATA SHEET 2
5. FOUNDATION PLAN
6. ABUTMENT #1 PLAN & ELEVATION
7. ABUTMENT #4 PLAN & ELEVATION
8. ABUTMENT DETAILS
9. BENT PLAN & ELEVATION
10. BENT DETAILS 1
11. BENT DETAILS 2
12. BENT DETAILS 3
13. FRAMING PLAN
14. GIRDER DETAILS-SPAN 1 & 3
15. GIRDER DETAILS-SPAN 2
16. DIAPHRAGM & BEARING DETAILS
17. DECK PLAN
18. DECK SECTIONS
19. APPROACH SLAB PLAN
20. APPROACH SLAB DETAILS
21. APPROACH SLAB DRAIN DETAILS
22. SCREED ELEVATIONS
23. PARAPET DETAILS
24. PARAPET END DETAILS
25. CONCRETE SLOPE PROTECTION
26. REINFORCING SCHEDULE 1
27. REINFORCING SCHEDULE 2


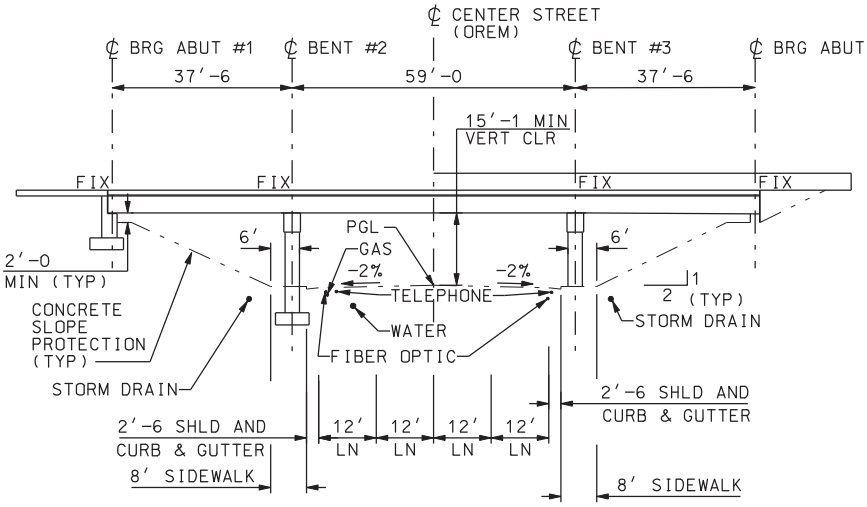


ELEVATION

NO

1. ALL BENTS AND ABU
TO BEARING S89°25

2. ROADWAY INFORMATI
IS BASED ON EXIST
SECTION VARIES AN

3. ROADWAY CENTER LI
STATION EQUATIONS

DGN File: IP_PWPcdns1717\4433_F15_01.dgn
02-MAY-2005

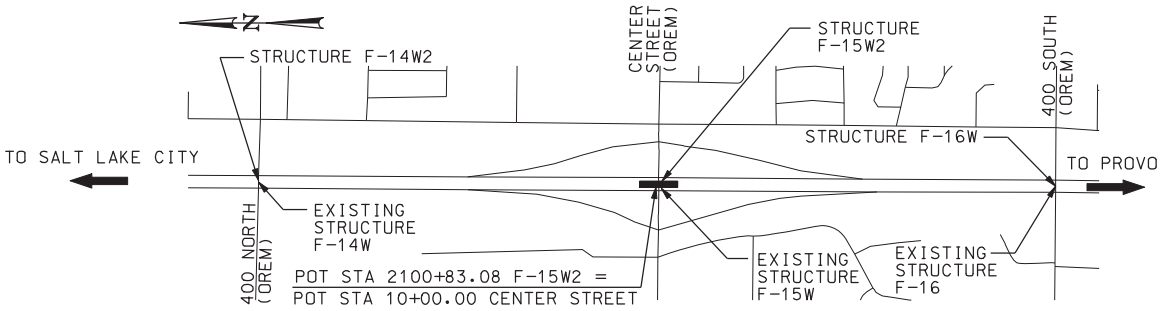


## LOCATION PLAN

## DESIGN DATA

HL-93 LOADING IN ACCORDANCE WITH AASHTO LRFD BRIDGE DESIGN SPECIFICATIONS, 3rd EDITION, 2004. SEISMIC DESIGN PER NCHRP 12-49.

INVENTORY AND OPERATING RATINGS FOR HS20-44 ARE IN ACCORDANCE WITH THE AASHTO MANUAL FOR CONDITION ELEVATION OF BRIDGES, 2nd EDITION, AND THE 2001 AND 2003 INTERIM SPECIFICATIONS LOAD FACTOR METHOD. INVENTORY AND OPERATING RATINGS FOR HL-93 ARE IN ACCORDANCE WITH THE GUIDE MANUAL FOR CONDITION EVALUATION AND LOAD RESISTANCE FACTOR RATING (LRFR) OF HIGHWAY BRIDGES.

| | OPERATING RATING | INVENTORY RATING |
|---|---|---|
| EXISTING GIRDERS | (HS-20) 1.63<br>(HL-93) 1.52 | (HS-20) 0.98 (SHEAR - SPANS 1 & 3)<br>(HL-93) 1.17 (SHEAR - SPAN 2) |
| NEW GIRDERS | (HL-93) 1.52 | (HL-93) 1.18 (SHEAR - SPAN 2) |
| CAST-IN-PLACE CONCRETE: | f'c = 4000 psi; fy (REINF) = 60 ksi | |
| PRESTRESSED CONCRETE: | f'c = 6000 psi; fci = 4000 psi; | |
| STRUCTURAL STEEL: | fy = 36 ksi | |
| WEARING SURFACE: | 3" ASPHALT; 0 PSF (FUTURE) | |
| DESIGN SPEED: | I-15 = 70 MPH; CENTER STREET= 40 MPH | |
| SEISMIC: | SEISMIC DESIGN PARAMETERS (500 YR RETURN PERIOD, 10% PE IN 50 YR)<br>Ss = MAX. CONSIDERED EQ GROUND MOTION AT 0.2s = 0.4275g.<br>S1 = MAX. CONSIDERED EQ GROUND MOTION AT 1.0s = 0.1444g.<br>SITE CLASS D<br>EXISTING STRUCTURE ELEMENTS DO NOT MEET THE SEISMIC DESIGN CRITERIA | |

## GENERAL NOTES

1. USE COATED DEFORMED BILLET-STEEL BARS CONFORMING TO AASHTO M 284 OR M 111 AND M 31 GRADE 60 FOR ALL REINFORCING STEEL.
2. CONFORM ALL STRUCTURAL STEEL TO AASHTO M 270 GRADE 36, EXCEPT WHERE NOTED OTHERWISE.
3. CHAMFER ALL EXPOSED CONCRETE CORNERS 3/4" EXCEPT WHERE NOTED OTHERWISE.
4. PROVIDE 2" CONCRETE COVER TO REINFORCING STEEL EXCEPT WHERE NOTED OTHERWISE.
5. USE CLASS AA (AE) FOR CAST-IN-PLACE CONCRETE EXCEPT WHERE SPECIFIED OTHERWISE.
6. ALL NEW SUBSTRUCTURE ELEMENTS ARE DESIGNED TO MATCH LOCATION AND DIRECTION OF EXISTING ELEMENTS. FIELD VERIFY ALL CONTROLLING DIMENSIONS PRIOR TO CONSTRUCTION AND FABRICATION OF ANY MATERIALS. REPORT ANY DISCREPANCY BETWEEN THESE PLANS AND THE EXISTING STRUCTURE TO THE ENGINEER. DO NOT CONSTRUCT OR FABRICATE ANY ELEMENTS UNTIL THE DISCREPANCIES ARE RESOLVED. ALL STRUCTURE GEOMETRY IS BASED ON LOCAL SURVEY CONTROL POINTS SHOWN ON THE FOUNDATION PLAN. THE I-15 STATIONING AND ALIGNMENT IS FOR INFORMATION ONLY. ABUTMENT/BENT DIRECTIONS AND LOCATIONS USED IN DESIGN ARE LISTED.
7. SEE EXISTING STRUCTURE F-15 AND F-15W PLANS FOR ADDITIONAL INFORMATION.
8. VERIFY RELATIVE ELEVATION DIFFERENCES BETWEEN F-15W AND F-15W2 AT BOTTOM OF NBL AND SBL INTERIOR MOST EXISTING BEAMS AT FROM FACE OF ABUTMENT, SEE ABUTMENT PLAN AND ELEVATION SHEETS. IF THE RELATIVE ELEVATION DIFFERENCES VARY BY MORE THAN +/- 1", ADJUST ALL PLAN ELEVATIONS ACCORDINGLY AND SUBMIT TO THE ENGINEER FOR APPROVAL BEFORE MAKING ANY ADJUSTMENTS IN THE FIELD.
9. LINE F-15W2 IS OBTAINED BY CREATING A LINE CONNECTING TWO POINTS EACH LOCATED ALONG THE CENTERLINE BEARING ABUTMENT #1 AND #4 RESPECTIVELY THAT ARE EQUIDISTANT FROM THE CENTERLINE OF THE SBL AND NBL INTERIOR MOST BEAMS.
10. ALL DECK, APPROACH SLAB AND PROFILE GRADE ELEVATIONS ARE TOP OF CONCRETE.
11. HORIZONTAL DIMENSIONS ARE PLAN. VERTICAL DIMENSIONS ARE PLUMB.
12. DO NOT SCALE DRAWINGS.
13. SEE REHABILITATION PLANS, DRAWING NO. M-91 FOR REHABILITATION INFORMATION.
14. SEE UTILITY PLANS FOR ADDITIONAL UTILITY INFORMATION.

## QUANTITIES

| ITEM | EST | UNIT | AS CONSTR |
|---|---|---|---|
| GRANULAR BACKFILL BORROW (PLAN QUANTITY) | 267 | CU YD | |
| STRUCTURAL FILL BENEATH FOUNDATIONS | 229 | CU YD | |
| REINFORCING STEEL - COATED | 83652 | LBS | |
| STRUCTURAL CONCRETE (EST.LUMP QTY: 457 CU YD) | 1 | LUMP | |
| STRUCTURAL STEEL (EST.LUMP QTY: 546 LBS) | 1 | LUMP | |
| PRESTRESSED CONCRETE MEMBER (37 FT-11 INCH TYPE III) | 8 | EACH | |
| PRESTRESSED CONCRETE MEMBER (58 FT-8 INCH TYPE III) | 4 | EACH | |
| PREPARE BRIDGE FOR WIDENING | 1 | LUMP | |
| REPLACE CONCRETE SLOPE PROTECTION | 203 | SQ YD | |

NG
RE F-15W

ACH SLAB

PPROACH
LAB (TYP)

34' 10"E

℄ F-15W2

POT STA 2101+66.17 F-15W2 =
POT STA 717+39.83 I-15 (0.09 RT)

PPROACH
LAB (TYP)

ACH SLAB

NG
RE F-15W

TES

TMENTS ARE PARALLEL
'50"W.

ON FOR CENTER STREET
ING PLANS. ROADWAY TYPICAL
D IS APPROXIMATE.

NE I-15 ALIGNMENT NOT SHOWN.
LOCATED AT END OF APPROACH SLABS.

| NO. | DATE | BY | REMARKS |
|---|---|---|---|

REVISIONS

UTAH DEPARTMENT OF TRANSPORTATION
SALT LAKE CITY, UTAH
STRUCTURES DIVISION

URS

DESIGN PH 12/04 CHECK GTD 12/04
DRAWN DKH 12/04 CHECK PH 12/04
QUANT. CDT 12/04 CHECK CEL 12/04

APPROVAL RECOMM. DATE SENIOR DESIGN ENGR.
APPROVED FOR USE BY UDOT DATE UDOT BRIDGE ENGR.

I-15; CORRIDOR IN UTAH COUNTY
OREM CENTER STREET OVERPASS
SITUATION & LAYOUT 1

PROJECT NUMBER SP-15-6(52)241

UTAH
COUNTY

F-15W2
DRG. NO.

SHT. 1 OF 27

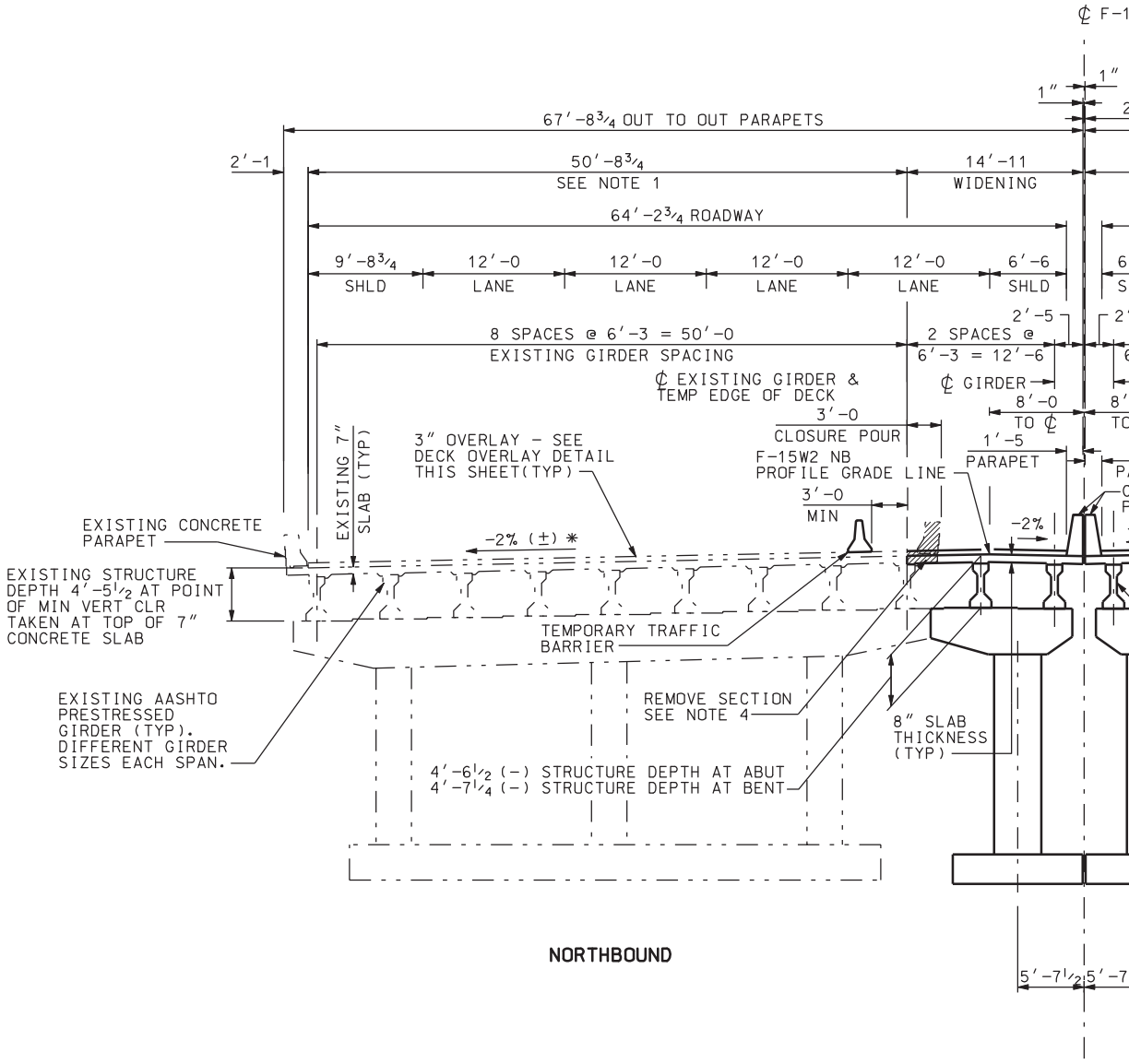


## SECTION A

✱ MATCH EXISTING C

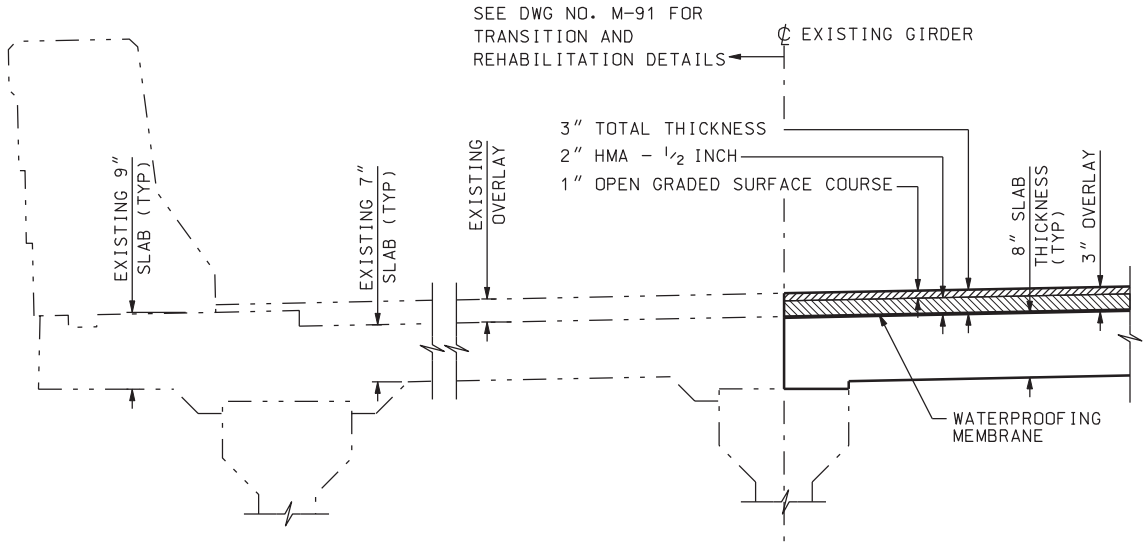


## DECK OVERLAY DETAIL

DGN File:IP_PWPcdns1717\4433_F15_02.dgn

02-MAY-2005

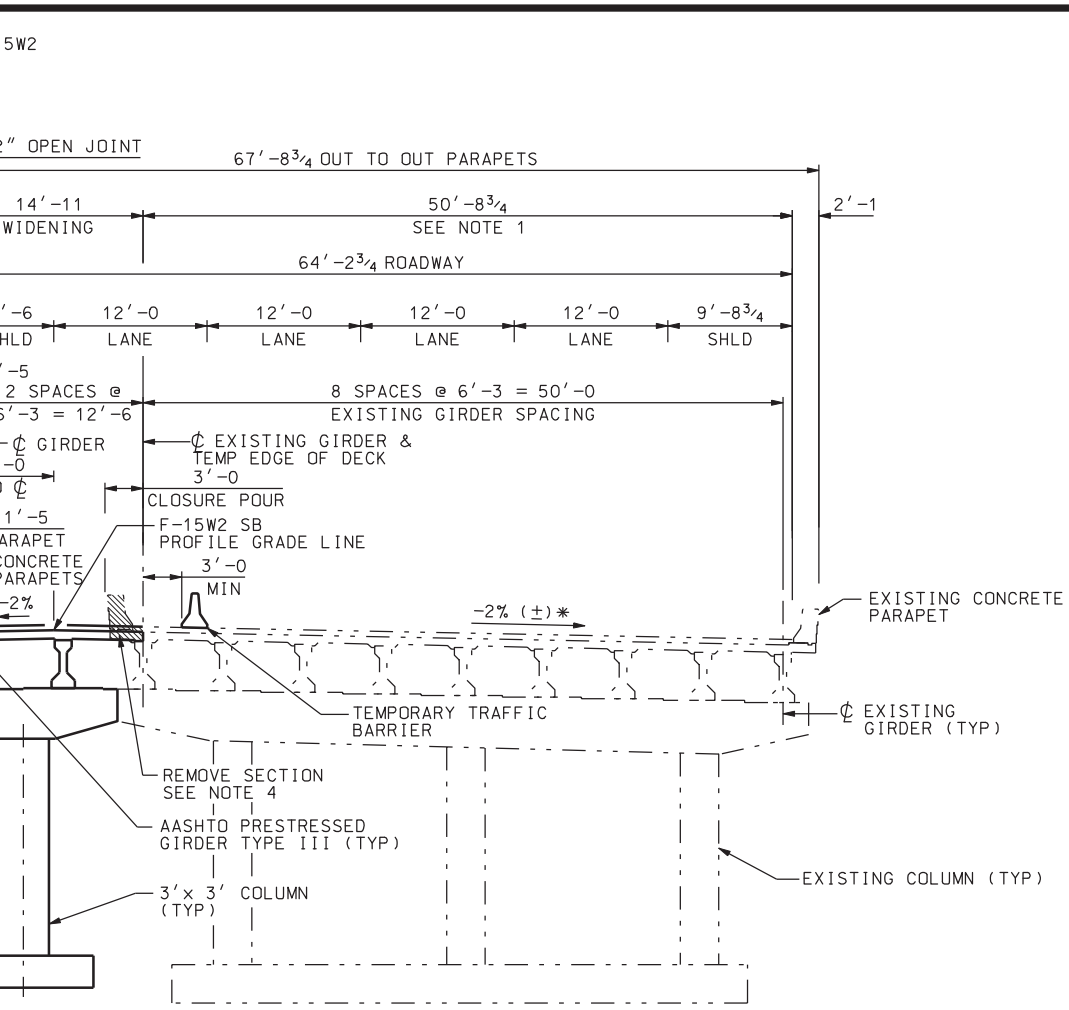


**SOUTHBOUND**

A-A

ROSS SLOPE

## NOTES

1. PARTIALLY REMOVE EXISTING ASPHALT SURFACING OVERLAY. SEE M-91 SHEETS FOR TRANSITION AND REHABILITATION DETAILS.
2. APPLY WATER PROOFING MEMBRANE, PLACE 1" OPEN GRADED SURFACE COURSE AND 2" HMA-½ INCH FOR A TOTAL THICKNESS EQUAL TO 3". SEE DECK OVERLAY DETAIL AND M-91 SHEETS.
3. PROFILE GRADE LINES LOCATED 8'-0 FROM ℄ F-15W2 AND IS AT TOP OF NEW CONCRETE DECK.
4. SEE SPECIAL PROVISION "PREPARE BRIDGE FOR WIDENING" FOR FURTHER INSTRUCTIONS.

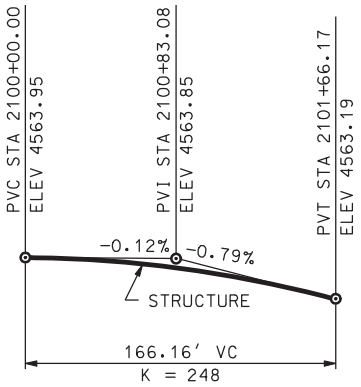


F-15W2 NB & SB PROFILE

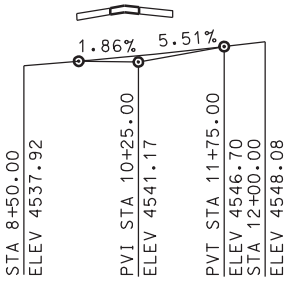


CENTER STREET PROFILE (EXIST)

| NO. | DATE | BY | REMARKS |
|---|---|---|---|

REVISIONS

UTAH DEPARTMENT OF TRANSPORTATION
SALT LAKE CITY, UTAH
STRUCTURES DIVISION

URS

DESIGN PH 12/04 CHECK GTD 12/04
DRAWN DKH 12/04 CHECK PH 12/04
QUANT. CDT 12/04 CHECK CEL 12/04

APPROVAL RECOMM. DATE SENIOR DESIGN ENGR.
APPROVED FOR USE BY UDOT DATE UDOT BRIDGE ENGR.

I-15; CORRIDOR IN UTAH COUNTY
OREM CENTER STREET OVERPASS
SITUATION & LAYOUT 2

PROJECT NUMBER SP-15-6(52)241

UTAH
COUNTY

F-15W2
DRG. NO.

SHT. 2 OF 27

# DRILL HOLE LOG

## BORING NO. 04–1

Sheet: 1 of 1

PROJECT: I-15, CORRIDOR IN UTAH COUNTY - STRUCTURE F15 PROJECT NO.: 200401.045
CLIENT: UTAH DEPARTMENT OF TRANSPORTATION DATE: 8/6/04
LOCATION: SEE SITE PLAN: N 80935, E 212080 ELEVATION: 4541.0'
DRILLER: D. SAMPSON, A. HARTVIGSEN LOGGED BY: M.C., V.N.B.
EQUIP./DRILL METHOD: CME-55 / N.W. CASING
DEPTH TO WATER - INITIAL: ▽ 10.2' AFTER 24 HOURS: ▽ 9.8' 8/24/04

| Elev. (Feet) | Depth (Feet) | Lithology | Sample Type | Rec. (In.) | Blows Per 6" & Torvane (tsf) | USCS (AASHTO) | Material Description | | Dry Density, pcf | Moisture Content, % | Atter. Liquid Limit, % | Atter. Plasticity Index, % | Gradation Gravel, % | Gradation Sand, % | Gradation Silt/Clay, % | Other Tests |
|---|---|---|---|---|---|---|---|---|---|---|---|---|---|---|---|---|
| 4540 | | | | | | | 3" CONCRETE | | | | | | | | | |
| | | | | 10 | 7,8,9 | GP-GM | lt. brown, moist, med. dense | POORLY GRADED GRAVEL W/SILT & SAND (fill) | | | | | | | | |
| | | | | 14 | 9,8,7 0.35 | GP-GM (A-1-b) | lt. brown, slightly moist, med. dense | | | 4.9 | | NP | 54 | 37 | 9 | |
| | 5 | | | | | CL | tan, moist, firm | LEAN CLAY | | | | | | | | |
| 4535 | | | | 14 | Pushed 0.64 | ML (A-4(8)) | tan, slightly moist, stiff | SILT W/SAND LENSES & LAYERS | 104.7 | 18.6 | 28 | 5 | 0 | 4 | 96 | CT UC |
| | 10 | | | 11 | Pushed 0.82 | CL (A-6(8)) | tan, slightly moist, stiff | LEAN CLAY W/SAND LENSES | 96.2 | 24.7 | 35 | 14 | 0 | 0 | 100 | CT UC |
| 4530 | | | | | | | | | | | | | | | | |
| | | | | 14 | 11,10,12 | SM (A-2-4) | tan, wet, med. dense | SILTY SAND | | 23.9 | | NP | 0 | 71 | 29 | |
| | 15 | | | 12 | 7,11,14 | SM (A-2-4) | lt. brown, wet, med. dense, w/silt layers | | | 25.0 | | NP | 0 | 67 | 33 | DS |
| 4525 | | | | | | | | | | | | | | | | |
| | 20 | | | 13 | 12,13,18 | SM (A-2-4) | lt. brown, wet, dense | SILTY SAND W/SANDY SILT LAYERS | | 22.2 | | NP | 0 | 70 | 30 | |
| 4520 | | | | | | | | | | | | | | | | |
| | 25 | | | 14 | 13,13,12 | SM | lt. brown, wet, med. dense | | | | | | | | | |
| 4515 | | | | | | | | | | | | | | | | |
| | 30 | | | 14 | Pushed 0.56 | CL-ML (A-4(8)) | brown, wet, stiff | SILTY CLAY | 102.7 | 23.2 | 27 | 5 | 0 | 5 | 95 | CT UC |
| 4510 | | | | | | | | | | | | | | | | |
| | 35 | | | 13 | 3,4,8 0.35 0.40 | CL | brown, wet, firm | LEAN CLAY W/SAND LENSES | | | | | | | | |
| 4505 | | | | | | | | | | | | | | | | |
| | 40 | | | 12 | 12,24,35 | SM (A-3) | brown, wet, very dense | SILTY SAND | | 20.9 | | NP | 0 | 82 | 18 | |
| 4500 | | | | | | | | | | | | | | | | |
| | 45 | | | 11 | 21,29,30 | SM | brown, wet, very dense | | | | | | | | | |
| 4495 | | | | | | | | | | | | | | | | |
| | 50 | | | 12 | 20,25,29 | SM (A-3) | brown, wet, very dense | | | 22.9 | | NP | 0 | 79 | 21 | |
| 4490 | | | | | | | | | | | | | | | | |
| | 55 | | | 13 | 20,29,30 | SM | brown, wet, very dense | | | | | | | | | |
| 4485 | | | | | | | | | | | | | | | | |
| | 60 | | | 14 | 11,33,39 0.37 | CL | brown | LEAN CLAY W/SAND LENSES | | | | | | | | |
| 4480 | | | | | | SM (A-3) | brown, wet, very dense | SILTY SAND | | 18.7 | | NP | 0 | 82 | 18 | |
| | 65 | | | 12 | 21,34,35 | SM | brown, wet, very dense | | | | | | | | | |
| 4475 | | | | | | | | | | | | | | | | |
| | 70 | | | 11 | 24,34,24 | SM (A-3) | gray, wet, very dense | | | 20.7 | | NP | 0 | 81 | 19 | |
| 4470 | | | | | | | | | | | | | | | | |
| | 75 | | | 12 | 8,23,12 | CL | gray, wet, stiff | LEAN CLAY W/SAND LENSES | | | | | | | | |
| | | | | | | SM | gray, wet, med. dense | SILTY SAND | | | | | | | | |
| 4465 | | | | | | ML | gray, wet, stiff | SILT W/SAND LENSES | | | | | | | | |

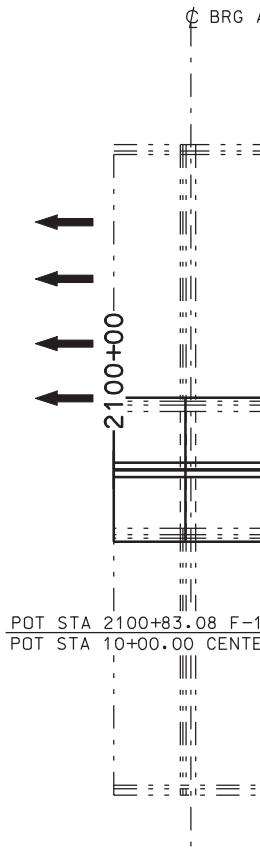


DGN File: IP_PWPcdns1717\4433_F15_03.dgn

02-MAY-2005

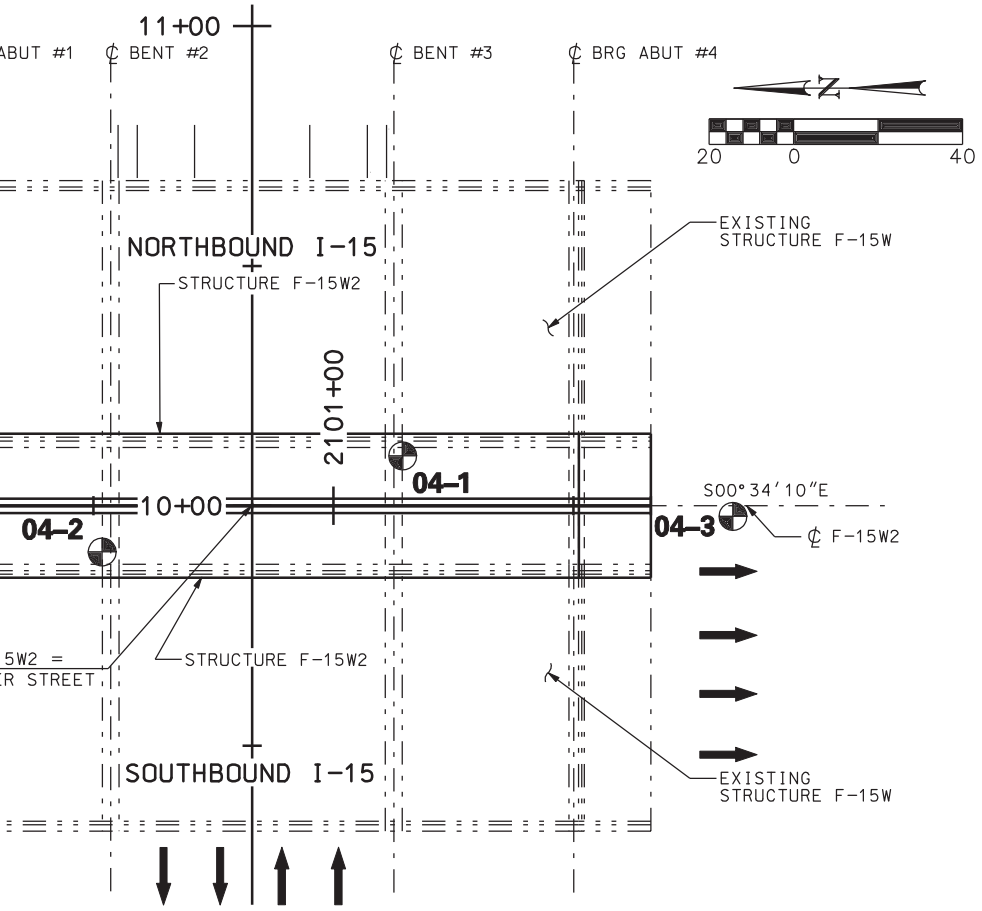


LOCATION PLAN

# KEY TO BORING LOG

## SYMBOLS

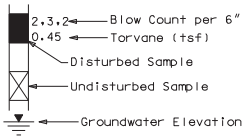


UC = Unconfined Compression Test
CT = Consolidation Test
SG = Specific Gravity Test
DS = Direct Shear Test

## RELATIVE DENSITY (NON-PLASTIC - SAND & SILT)

VERY LOOSE N<4
LOOSE N 4-10
MED DENSE N 10-30
DENSE N 30-50
VERY DENSE N>50

## CONSISTENCY (PLASTIC - SILT & CLAY)

VERY SOFT N<2
SOFT N 2-4
MEDIUM STIFF N 4-8
STIFF N 8-15
VERY STIFF N 15-30
HARD N>30

## GENERAL NOTES

1. THE SUBSURFACE EXPLORATIONS SHOWN WERE CONDUCTED BETWEEN 08-04-04 AND 08-09-04 BY RB&G ENGINEERING, INC..
2. THESE BORING LOGS REPRESENT A SYNOPSIS OF THE SOIL DEPOSITS ENCOUNTERED WITHIN EACH BORING AND ARE BASED ON SOUND GEOLOGICAL AND ENGINEERING JUDGMENT. BECAUSE SOIL IS A COMPLEX MEDIUM, THESE BORING LOGS MAY OR MAY NOT REPRESENT THE SOIL CONDITIONS AT THIS SITE. THIS SUBSURFACE INTERPRETATION IS PRESENTED IN GOOD FAITH AND IS NOT INTENDED AS A SUBSTITUTE FOR PERSONAL INVESTIGATION AND JUDGEMENT OF THE CONTRACTOR.
3. THE WATER LEVELS AND CONDITIONS INDICATED ON THE BORING LOGS REPRESENT HOLE CONDITIONS ON THE DATE SHOWN, HOWEVER, IT SHOULD BE NOTED, THAT AT LOCATIONS AWAY FROM THE BORINGS OR AT ANOTHER TIME THE WATER LEVELS AND CONDITIONS MAY VARY SIGNIFICANTLY.
4. THE STRATIFICATION LINES REPRESENT THE APPROXIMATE BOUNDARIES BETWEEN SOIL TYPES AND THE TRANSITION MAY BE GRADUAL.
5. COBBLE - A ROCK WITH AN AVERAGE DIMENSION BETWEEN 3 INCHES AND 12 INCHES
6. BOULDER - A ROCK WITH AN AVERAGE DIMENSION OF 12 INCHES OR GREATER

NOTE: DRILL RIG USED - CME 55 HAMMER E=0.75

GEOTECHNICAL ENGINEER

| NO. | DATE | BY | REMARKS |
|---|---|---|---|

REVISIONS

UTAH DEPARTMENT OF TRANSPORTATION
SALT LAKE CITY, UTAH
STRUCTURES DIVISION

URS

DESIGN MLC 8/04 CHECK VNB 10/04
DRAWN JPN 10/04 CHECK BEP 10/04
QUANT. CHECK

APPROVAL RECOMM. DATE SENIOR DESIGN ENGR.
APPROVED FOR USE BY UDOT DATE UDOT BRIDGE ENGR.

I-15; CORRIDOR IN UTAH COUNTY
OREM CENTER STREET OVERPASS
SOIL DATA SHEET 1
PROJECT NUMBER SP-15-6(52)241

UTAH
COUNTY

F-15W2
DRG. NO.

SHT. 3 OF 27

# DRILL HOLE LOG

## BORING NO. 04-2

Sheet: 1 of 1

PROJECT: I-15, CORRIDOR IN UTAH COUNTY - STRUCTURE F15 PROJECT NO.: 200401.045
CLIENT: UTAH DEPARTMENT OF TRANSPORTATION DATE: 8/9/04
LOCATION: SEE SITE PLAN: N 80996, E 212057 ELEVATION: 4540.7'
DRILLER: D. SAMPSON, A. HARTVIGSEN LOGGED BY: M.H., V.N.B.
EQUIP./DRILL METHOD: CME-55 / N.W. CASING
DEPTH TO WATER - INITIAL: ▽ 8.9' AFTER 24 HOURS: ▼ 8.7' 8/24/04

| Elev. (Feet) | Depth (Feet) | Lithology | Sample Type | Rec. (in.) | Blows Per 6" & Torvane (tsf) | USCS (AASHTO) | Material Description | | Dry Density, pcf | Moisture Content, % | Atter. Liquid Limit, % | Atter. Plasticity Index, % | Gradation Gravel, % | Gradation Sand, % | Gradation Silt/Clay, % | Other Tests |
|---|---|---|---|---|---|---|---|---|---|---|---|---|---|---|---|---|
| 4540 | | | | 16 | 12,11,12 | GP-GM | brown, slightly moist, med. dense | 2" CONCRETE<br>POORLY GRADED GRAVEL W/SAND & SILT | | | | | | | | |
| | | | | 16 | 10,6,7<br>0.51 | CL-ML<br>(A-4(5)) | brown, slightly moist, firm to stiff, pinholes | | | 21.3 | 24 | 4 | 1 | 39 | 60 | |
| 4535 | 5 | | | 14 | Pushed<br>0.50 | CL-ML<br>(A-4(8)) | lt. brown, slightly moist, firm to stiff | SILTY CLAY W/SILTY SAND LENSES | 105.5 | 22.0 | 28 | 6 | 0 | 7 | 93 | CT<br>UC |
| 4530 | 10 | | | 18 | 4,5,6<br>0.89 | CL | lt. brown, moist to wet, firm, 1" silty sand layer | | | | | | | | | |
| | | | | 18 | 10,11,11 | SM<br>(A-3) | brown, wet, med. dense | | | 34.6 | | NP | 0 | 69 | 31 | |
| 4525 | 15 | | | 0<br>0 | Pushed<br>0,3,7 | - | | | | | | | | | | |
| | | | | 15 | 2,5,7 | SM | brown, wet, med. dense | | | | | | | | | |
| 4520 | 20 | | | 13 | 10,13,9 | SM<br>(A-3) | brown, wet, med. dense | SILTY SAND W/SANDY SILT LENSES | | 24.4 | | NP | 0 | 78 | 22 | |
| 4515 | 25 | | | 13 | 11,20,22 | SM | brown, wet, dense, 1" silt layer | | | | | | | | | |
| 4510 | 30 | | | 15 | 4,6,6<br>0.38 | ML<br>(A-4(8)) | lt. brown, wet, soft to firm | SILT W/SILTY SAND LAYERS 1" TO 2" THICK | | 23.5 | 24 | 3 | 0 | 18 | 82 | |
| 4505 | 35 | | | 18 | Pushed<br>0.58 | CL<br>(A-6(8)) | lt. brown, moist, firm | LEAN CLAY | 91.3 | 28.2 | 32 | 12 | 0 | 1 | 99 | CT<br>UC |
| 4500 | 40 | | | 14 | 13,19,15 | SP-SM<br>(A-3) | brown, wet, dense | | | 22.3 | | | 0 | 89 | 11 | |
| 4495 | 45 | | | 14 | 13,20,21 | SM | brown, wet, dense | SILTY FINE TO MED. SAND | | | | | | | | |
| 4490 | 50 | | | - | 15,20,23 | SM | brown, wet, dense | | | | | | | | | |

DRILL HO

BORING N

Sheet: 1 of 1

| Elev. (Feet) | Depth (Feet) |
|---|---|
| 4560 | |
| | 5 |
| 4555 | |
| | 10 |
| 4550 | |
| | 15 |
| 4545 | |
| | 20 |
| 4540 | |
| | 25 |
| 4535 | |
| | 30 |
| 4530 | |

DGN File: IP_PWPcdms1717\4433_F15_04.dgn

02-MAY-2005

# KEY TO BORING LOG

## SYMBOLS

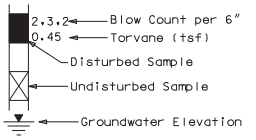


UC = Unconfined Compression Test
CT = Consolidation Test
SG = Specific Gravity Test
DS = Direct Shear Test

## RELATIVE DENSITY (NON-PLASTIC - SAND & SILT)

VERY LOOSE N<4
LOOSE N 4-10
MED DENSE N 10-30
DENSE N 30-50
VERY DENSE N>50

## CONSISTENCY (PLASTIC - SILT & CLAY)

VERY SOFT N<2
SOFT N 2-4
MEDIUM STIFF N 4-8
STIFF N 8-15
VERY STIFF N 15-30
HARD N>30

## GENERAL NOTES

1. THE SUBSURFACE EXPLORATIONS SHOWN WERE CONDUCTED BETWEEN 08-04-04 AND 08-09-04 BY RB&G ENGINEERING, INC..
2. THESE BORING LOGS REPRESENT A SYNOPSIS OF THE SOIL DEPOSITS ENCOUNTERED WITHIN EACH BORING AND ARE BASED ON SOUND GEOLOGICAL AND ENGINEERING JUDGMENT. BECAUSE SOIL IS A COMPLEX MEDIUM, THESE BORING LOGS MAY OR MAY NOT REPRESENT THE SOIL CONDITIONS AT THIS SITE. THIS SUBSURFACE INTERPRETATION IS PRESENTED IN GOOD FAITH AND IS NOT INTENDED AS A SUBSTITUTE FOR PERSONAL INVESTIGATION AND JUDGEMENT OF THE CONTRACTOR.
3. THE WATER LEVELS AND CONDITIONS INDICATED ON THE BORING LOGS REPRESENT HOLE CONDITIONS ON THE DATE SHOWN, HOWEVER, IT SHOULD BE NOTED, THAT AT LOCATIONS AWAY FROM THE BORINGS OR AT ANOTHER TIME THE WATER LEVELS AND CONDITIONS MAY VARY SIGNIFICANTLY.
4. THE STRATIFICATION LINES REPRESENT THE APPROXIMATE BOUNDARIES BETWEEN SOIL TYPES AND THE TRANSITION MAY BE GRADUAL.
5. COBBLE - A ROCK WITH AN AVERAGE DIMENSION BETWEEN 3 INCHES AND 12 INCHES
6. BOULDER - A ROCK WITH AN AVERAGE DIMENSION OF 12 INCHES OR GREATER

NOTE: DRILL RIG USED - CME 55
HAMMER E=0.75

GEOTECHNICAL ENGINEER

# LE LOG

NO. 04-3

PROJECT: I-15, CORRIDOR IN UTAH COUNTY - STRUCTURE F15 PROJECT NO.: 200401.045
CLIENT: UTAH DEPARTMENT OF TRANSPORTATION DATE: 8/19/04
LOCATION: SEE SITE PLAN: N 80878, E 212070 ELEVATION: 4562.5'
DRILLER: D. SAMPSON, A. HARTVIGSEN LOGGED BY: M.H., V.N.B.
EQUIP./DRILL METHOD: CME-55 / N.W. CASING
DEPTH TO WATER - INITIAL: DRY AFTER 24 HOURS: DRY AT 28.0' 8/24/04

| Lith-ology | Sample Type | Rec. (in.) | Blows Per 6" & Torvane (tsf) | USCS (AASHTO) | Material Description | Dry Density, pcf | Moisture Content, % | Atter. Liquid Limit, % | Atter. Plasticity Index, % | Gradation Gravel, % | Gradation Sand, % | Gradation Silt/Clay, % | Other Tests |
|---|---|---|---|---|---|---|---|---|---|---|---|---|---|
| | | 14 | 5,7,11 | SM | lt. brown, dry, med. dense, some gravel | | | | | | | | |
| | | 15 | 8,12,14 | SM (A-3) | lt. brown, slightly moist, med. dense, some clay lumps | | 6.6 | | NP | 0 | 82 | 18 | |
| | | 13 | 19,32,34 | SM | brown, slightly moist, very dense SILTY SAND | | | | | | | | |
| | | 12 | 10,16,18 | SM | brown, slightly moist, dense, trace of gravel & clay lumps | | | | | | | | |
| | | 14 | 12,26,47 | SM (A-2-4) | brown, moist, very dense | | 10.9 | | NP | 6 | 61 | 33 | |
| | | 14 | 17,23,19 | SM | brown & gray, moist, dense, trace of gravel, some clay | | | | | | | | |
| | | 13 | 11,16,11,12 | SM | brown, moist, med. dense | | | | | | | | |
| | | 15 | 4,4,6 0.43 | SM CL (A-4(8)) | brown, moist, loose<br>lt. brown, dry, firm LEAN CLAY w/white stringers, trace of pinholes | | 27.8 | 24 | 8 | 0 | 12 | 88 | |
| | | 11 | Pushed | CL SM | SILTY SAND | | | | | | | | |
| | | 11 | 6,8,6 0.61 | CL | brown, moist, med. dense LEAN CLAY W/SILTY SAND LENSES | | | | | | | | |

REVISIONS

| NO. | DATE | BY | REMARKS |
|---|---|---|---|

UTAH DEPARTMENT OF TRANSPORTATION
SALT LAKE CITY, UTAH
STRUCTURES DIVISION

URS

DESIGN MNH 8/04 CHECK VNB 10/04
DRAWN JPN 10/04 CHECK BEP 10/04
QUANT. CHECK

APPROVAL RECOMM. DATE SENIOR DESIGN ENGR.
APPROVED FOR USE BY UDOT DATE UDOT BRIDGE ENGR.

I-15; CORRIDOR IN UTAH COUNTY
OREM CENTER STREET OVERPASS
SOIL DATA SHEET 2
PROJECT NUMBER SP-15-6(52)241

UTAH
COUNTY

F-15W2
DRG. NO.

SHT. 4 OF 27

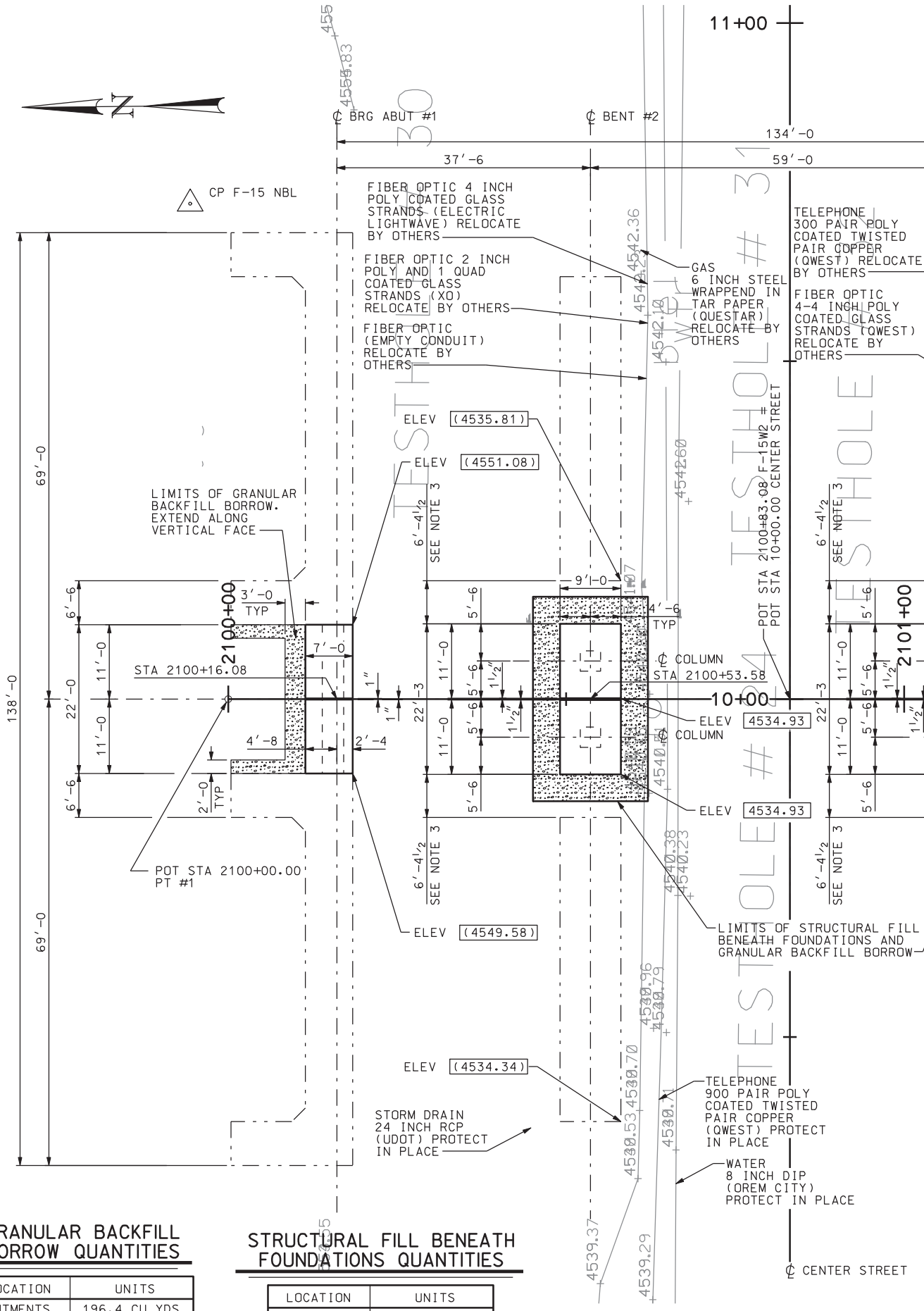


## GRANULAR BACKFILL BORROW QUANTITIES

| LOCATION | UNITS |
|---|---|
| ABUTMENTS | 196.4 CU YDS |
| BENTS | 69.8 CU YDS |

## STRUCTURAL FILL BENEATH FOUNDATIONS QUANTITIES

| LOCATION | UNITS |
|---|---|
| BENTS | 228.6 CU YDS |

## FOUNDATION PLAN

DGN File:IP_PWPcdns1717\4433_F15_05.dgn

02-MAY-2005

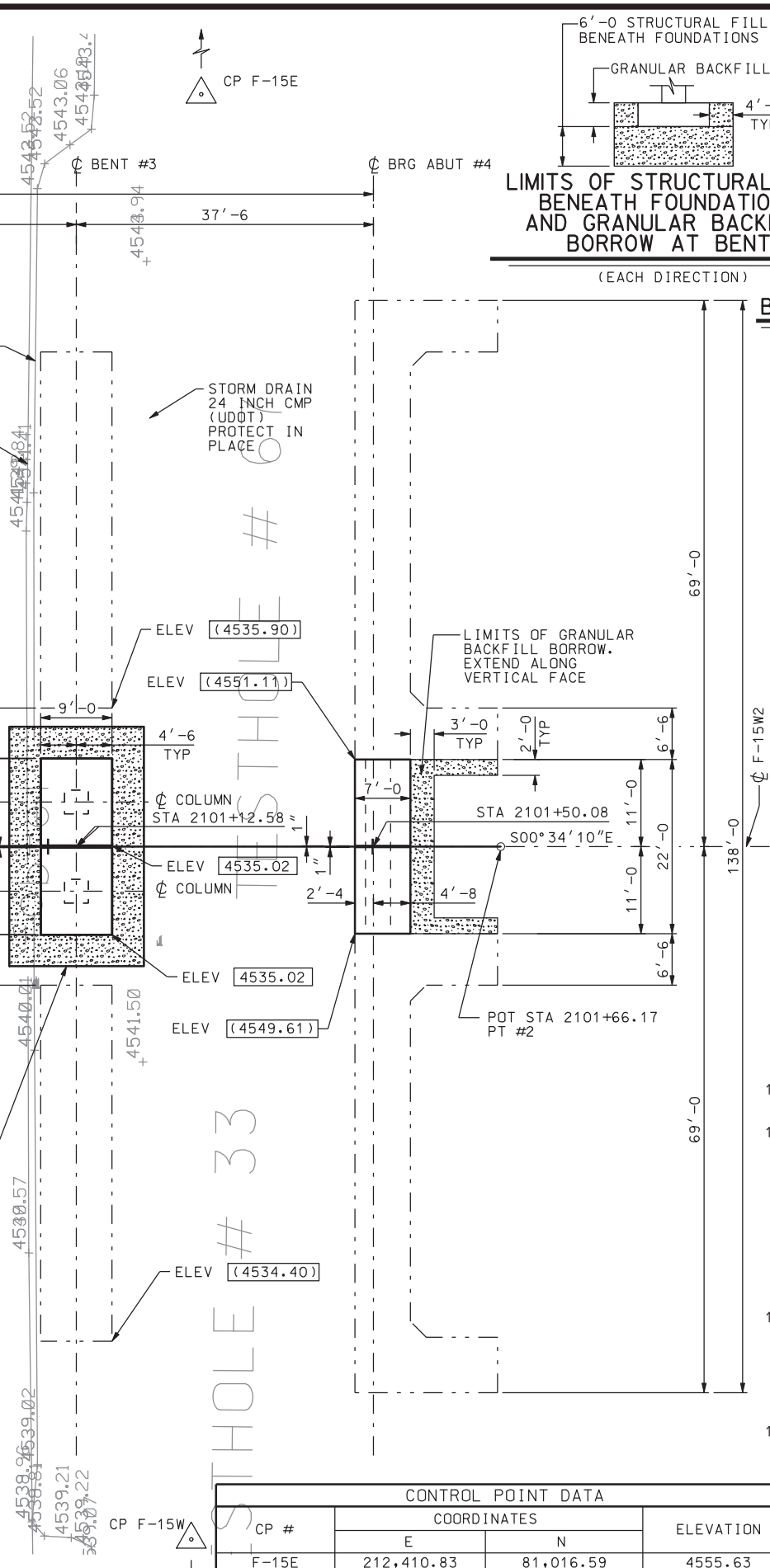


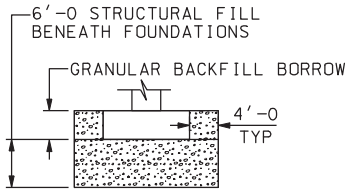


## LIMITS OF STRUCTURAL FILL BENEATH FOUNDATIONS AND GRANULAR BACKFILL BORROW AT BENT

(EACH DIRECTION)

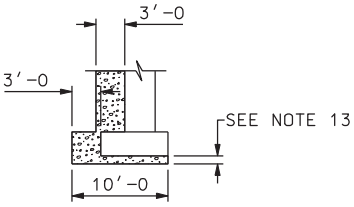


## LIMITS OF GRANULAR BACKFILL BORROW AT ABUTMENT

## NOTES

1. ALL BENTS AND ABUTMENTS ARE PARALLEL TO BEARING S89°25'50"W
2. ELEVATIONS AT THE BOTTOM OF FOOTING ARE SHOWN ENCLOSED IN RECTANGLES. E.G. 4534.40. ELEVATIONS SHOWN IN (FEET) ARE APPROXIMATE EXISTING BOTTOM OF FOOTING ELEVATIONS BASED ON SURVEY DATA.
3. DIMENSIONS TO EXISTING FOUNDATIONS ARE APPROXIMATE AND BASED ON EXISTING PLANS.
4. LOCATE ℄ NEW BENT AS AN EXTENSION OF THE BEARING ALONG ℄ OF EXISTING BENT.
5. ALIGN FRONT FACE OF ABUTMENT WALL WITH FRONT FACE OF EXISTING ABUTMENT WALL.
6. USE BRACED EXCAVATION OR WALL SYSTEM ADJACENT TO EXISTING BENTS WHERE SLOPES STEEPER THAN 1H:1V ARE NECESSARY. DO NOT USE BRACING OR WALLS THAT REQUIRE DRIVING, VIBRATION, OR OTHER ACTIONS THAT MAY DISTURB OR UNDERMINE EXISTING FOOTINGS.
7. PROVIDE BRACED EXCAVATION AT TOE OF ABUTMENT FILL AS NECESSARY DURING CONSTRUCTION.
8. BACKFILL BEHIND ABUTMENT NOT TO BE PLACED HIGHER THAN FILL IN FRONT OF THE ABUTMENT UNTIL SUPERSTRUCTURE IS IN PLACE. AFTER SUPERSTRUCTURE IS PLACED, BACKFILL TO BE PLACED UNIFORMLY AT BOTH ABUTMENTS TO EQUALIZE WALL PRESURE.
9. AT ABUTMENTS, SOIL BEARING PRESSURE, Qr (STR. I) = 8.75 KSF.
10. AT BENTS SOIL BEARING PRESSURE, Qr (STR. I) = 11.1 KSF.
11. FINAL DEPTH OF EXCAVATION BENEATH SPREAD FOOTINGS TO BE INSPECTED AND APPROVED BY ENGINEER TO ENSURE THAT LESS COMPETENT SOILS ARE COMPLETELY REMOVED. MINIMUM EXCAVATION WIDTH EQUAL TO FOOTING WIDTH PLUS OVEREXCAVATION DEPTH PLUS 2 FEET. REPLACE OVEREXCAVATED MATERIAL WITH STRUCTURAL FILL TO FOOTING LEVEL IN ACCORDANCE WITH SPECIAL PROVISION 02056S.
12. UTILITIES DESIGNATED AS "RELOCATE" ARE THE DESIGN-BUILD RESPONSIBILITY OF THE CONTRACTOR REFER TO UTILITY RELOCATION (DESIGN-BUILD) SPECIFICATION 00728S. SEE UT-13 FOR UTILITIES DATA NOT SHOWN.
13. FOR SPREAD FOOTINGS PLACED ON EXISTING SUBGRADE MATERIAL, SCARIFY THE UPPER 10 INCHES BELOW THE FOOTING ELEVATION, MOISTURE CONDITION, AND RECOMPACT TO AT LEAST 96% OF THE MAXIMUM LABORATORY DENSITY AS REQUIRED BY UDOT STANDARD SPECIFICATIONS SECTION 02324.

CONTROL POINT DATA

| CP # | COORDINATES | | ELEVATION |
|---|---|---|---|
| | E | N | |
| F-15E | 212,410.83 | 81,016.59 | 4555.63 |
| F-15W | 211,849.06 | 80,931.29 | 4536.47 |
| F-15 NBL | 212,141.65 | 81,054.72 | 4561.97 |
| PT #1 | 212,068.42 | 81,048.35 | |
| PT #2 | 212,070.08 | 80,882.19 | |

| NO. | DATE | BY | REMARKS |
|---|---|---|---|
| | | | |

REVISIONS

UTAH DEPARTMENT OF TRANSPORTATION
SALT LAKE CITY, UTAH
STRUCTURES DIVISION

URS

DESIGN PH 12/04 CHECK GTD 12/04
DRAWN DKH 12/04 CHECK PH 12/04
QUANT. CDT 12/04 CHECK CEL 12/04

APPROVAL RECOMM. DATE SENIOR DESIGN ENGR.
APPROVED FOR USE BY UDOT DATE UDOT BRIDGE ENGR.

I-15; CORRIDOR IN UTAH COUNTY
OREM CENTER STREET OVERPASS
FOUNDATION PLAN

PROJECT NUMBER SP-15-6(52)241

UTAH
COUNTY

F-15W2
DRG. NO.

SHT. 5 OF 27

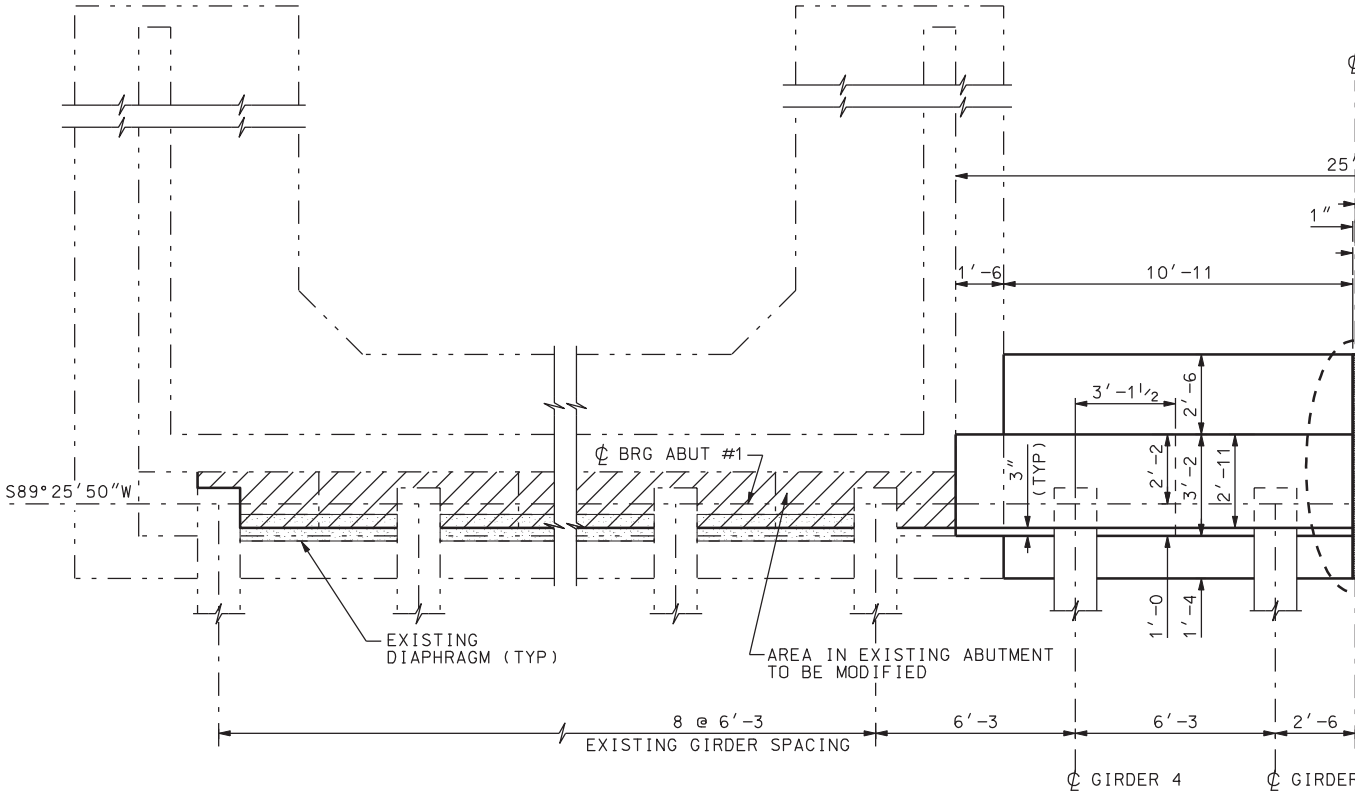


PL

(DECK NO

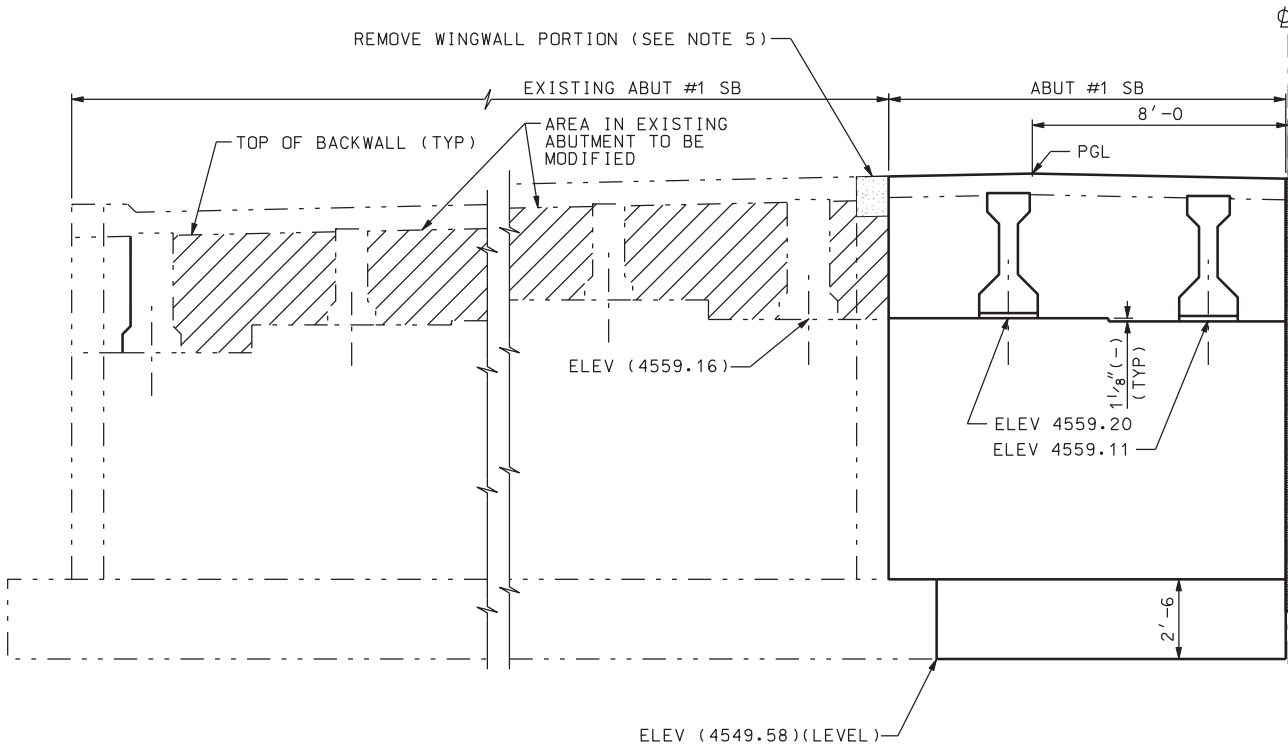


ELEV

LOOKING E
(PARAPET

## CONCRETE QUANTITIES

| LOCATION | ABUT #1 | UNITS |
|---|---|---|
| FOOTING | 14.2 | CU YDS |
| STEM | 18.5 | CU YDS |
| DIAPHRAGM | 9.8 | CU YDS |
| MODIFIED DIAPHRAGM | 20.4 | CU YDS |
| TOTAL | 63.0 | CU YDS |

DGN File:IP_PWPcdns1717\4433_F15_06.dgn
02-MAY-2005

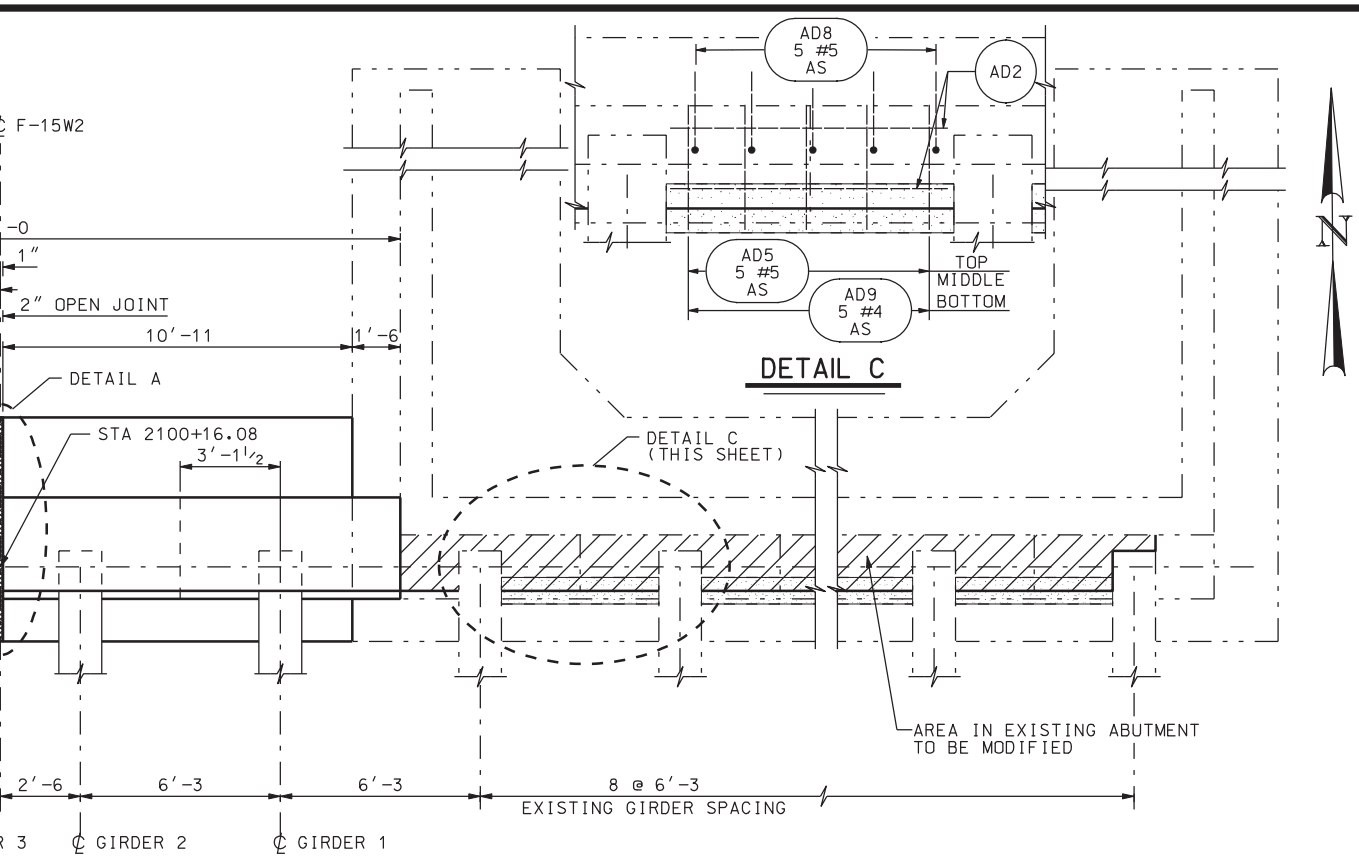


AN

OT SHOWN)

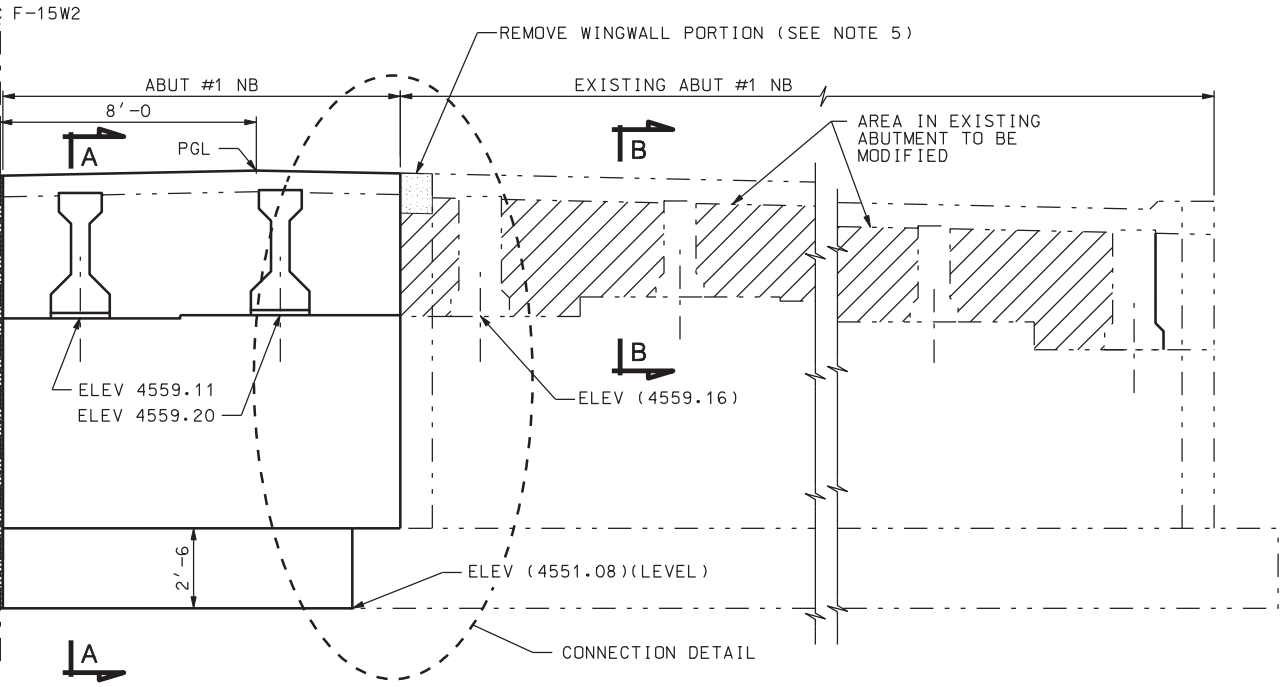


VATION

BACKSTATION
NOT SHOWN)

## NOTES

1. FOR SECTION A-A, SECTION B-B, DETAIL A AND CONNECTION DETAIL, SEE "ABUTMENT DETAILS" SHEET.
2. FOR BEARING DETAILS SEE "DIAPHRAGM AND BEARING DETAILS" SHEET.
3. FINISH BRIDGE SEAT BEARING AREA (2" LARGER THAN BEARING PAD) HIGH AND RUBBED OR GROUND LEVEL TO ELEVATION SHOWN ± 1/8". NO GROUTING ALLOWED.
4. FIGURES SHOWN IN PARENTHESIS ARE APPROXIMATE (FEET) BASED ON SURVEY INFORMATION.
5. REMOVE PARTIAL WINGWALL 1'-6 MIN. PROVIDE 6" MIN OF RIGID PLASTIC FOAM BETWEEN TOP OF EXISTING WINGWALL AND BOTTOM OF APPROACH SLAB.
6. ALIGN FRONT FACE OF ABUTMENT WALL WITH FRONT FACE OF EXISTING ABUTMENT WALL.

| NO. | DATE | BY | REMARKS |
|---|---|---|---|

REVISIONS

UTAH DEPARTMENT OF TRANSPORTATION
SALT LAKE CITY, UTAH
STRUCTURES DIVISION

URS

DESIGN PH 12/04 CHECK GTD 12/04
DRAWN DKH 12/04 CHECK PH 12/04
QUANT. CDT 12/04 CHECK CEL 12/04

APPROVAL RECOMM. DATE SENIOR DESIGN ENGR.
APPROVED FOR USE BY UDOT DATE UDOT BRIDGE ENGR.

I-15; CORRIDOR IN UTAH COUNTY
OREM CENTER STREET OVERPASS
ABUTMENT #1 PLAN & ELEVATION

PROJECT NUMBER SP-15-6(52)241

UTAH
COUNTY

F-15W2
DRG. NO.

SHT. 6 OF 27

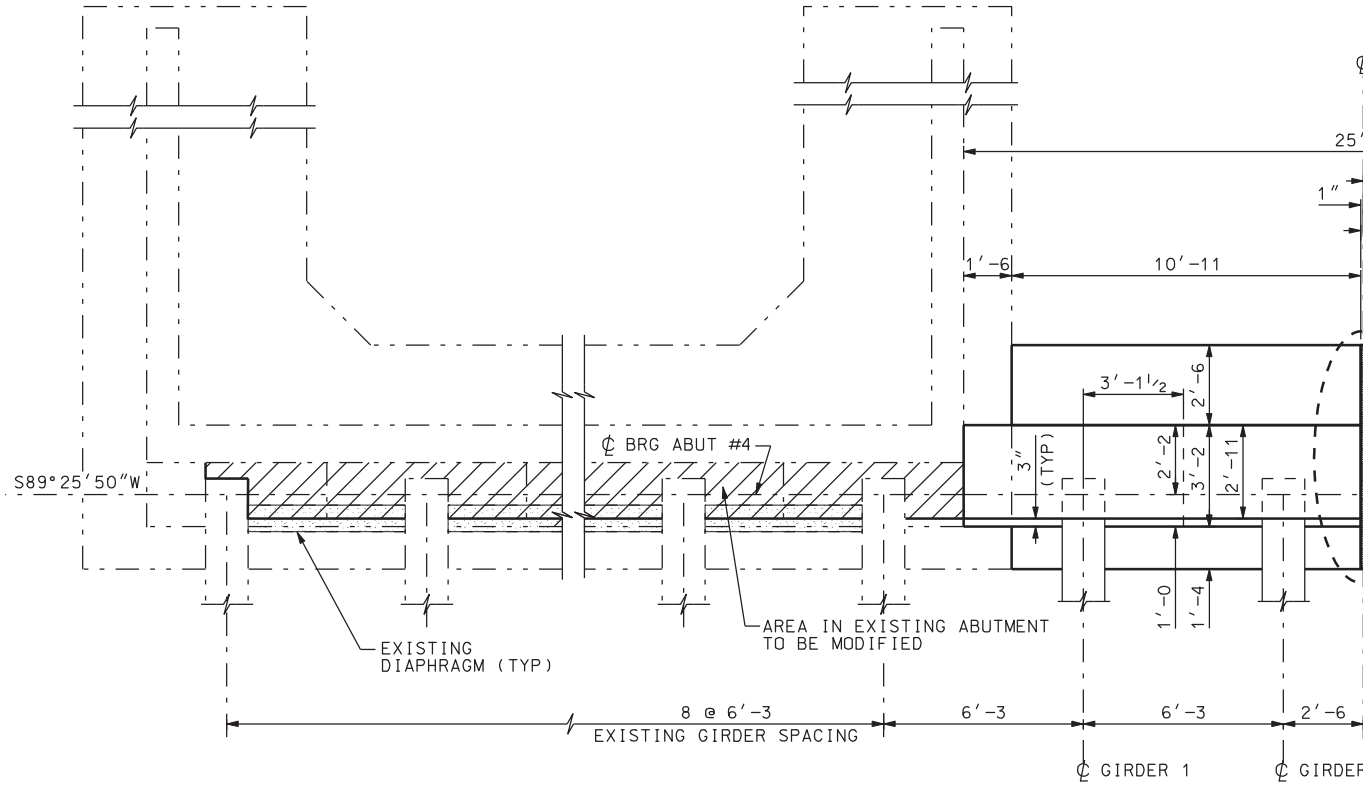


PL

(DECK NO

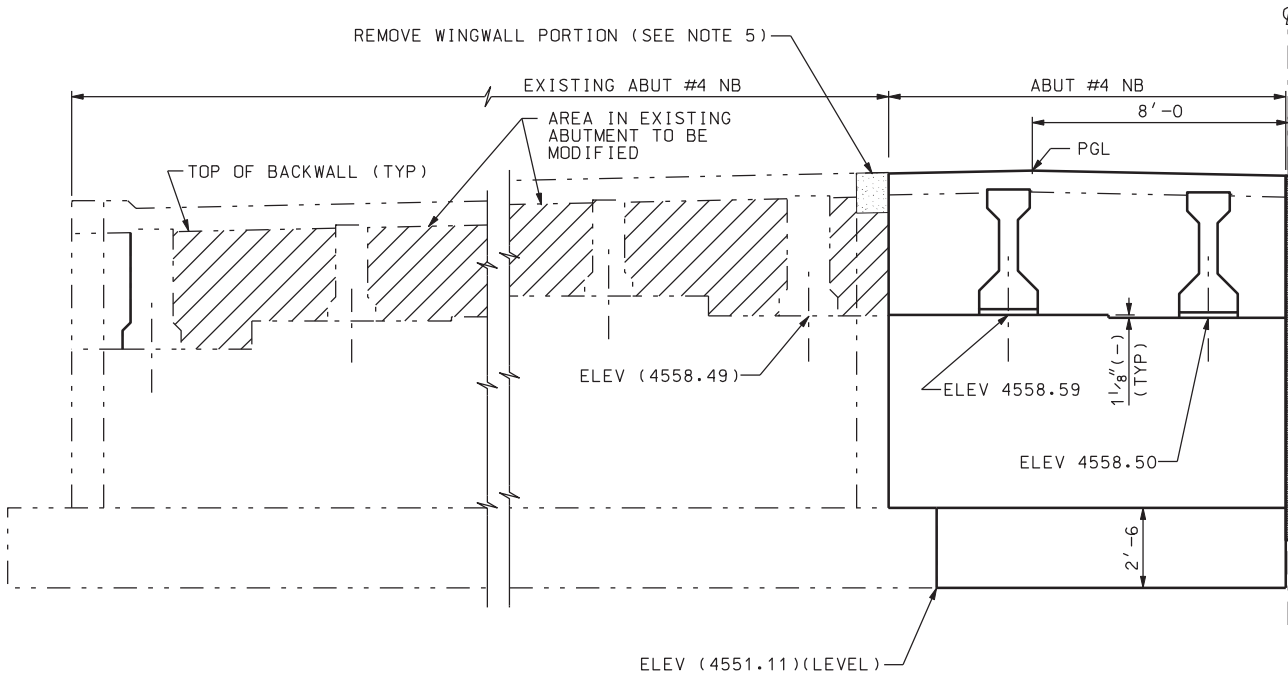


ELEV

LOOKING
(PARAPET

## CONCRETE QUANTITIES

| LOCATION | ABUT #4 | UNITS |
|---|---|---|
| FOOTING | 14.2 | CU YDS |
| STEM | 16.7 | CU YDS |
| DIAPHRAGM | 9.8 | CU YDS |
| MODIFIED DIAPHRAGM | 20.4 | CU YDS |
| TOTAL | 61.2 | CU YDS |

DGN File:IP_PWPcdms1717\4433_F15_07.dgn
02-MAY-2005

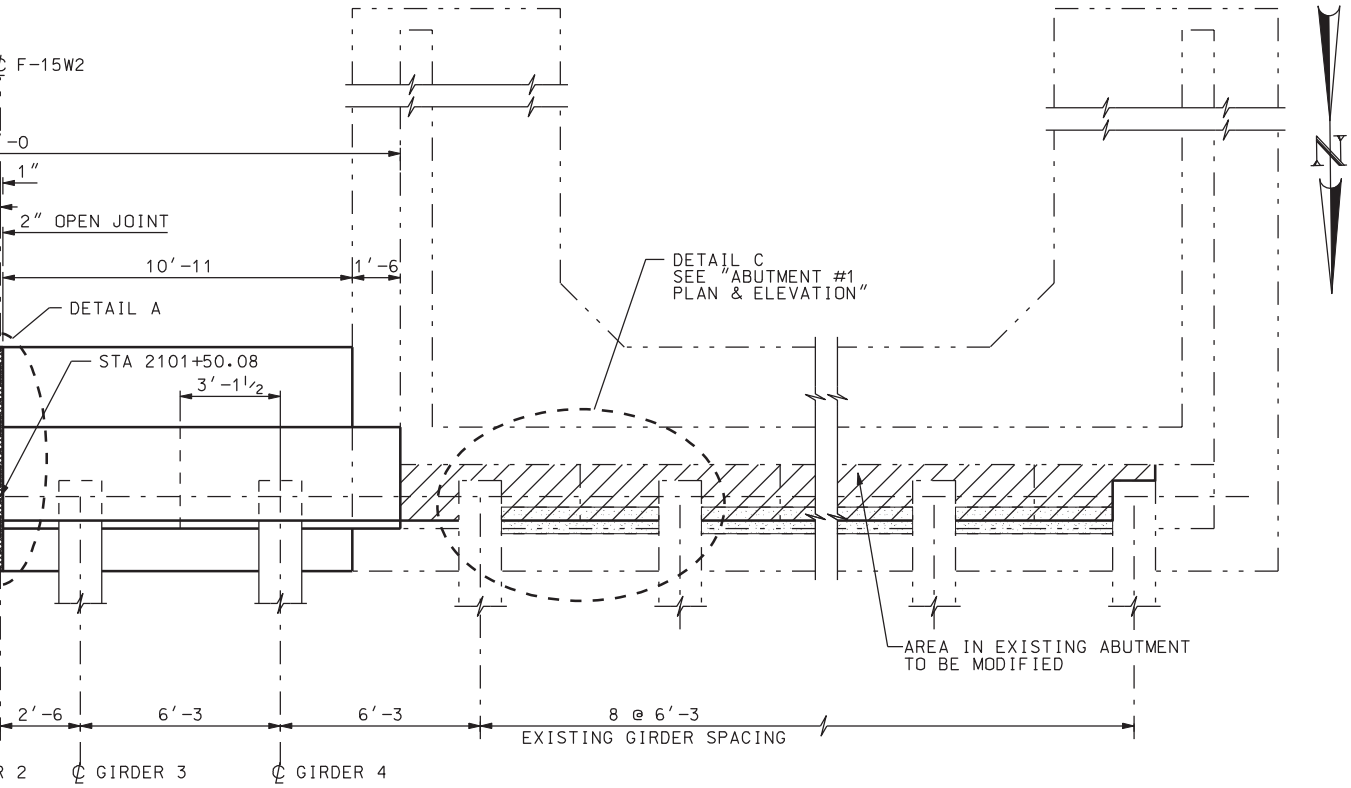


AN

OT SHOWN)

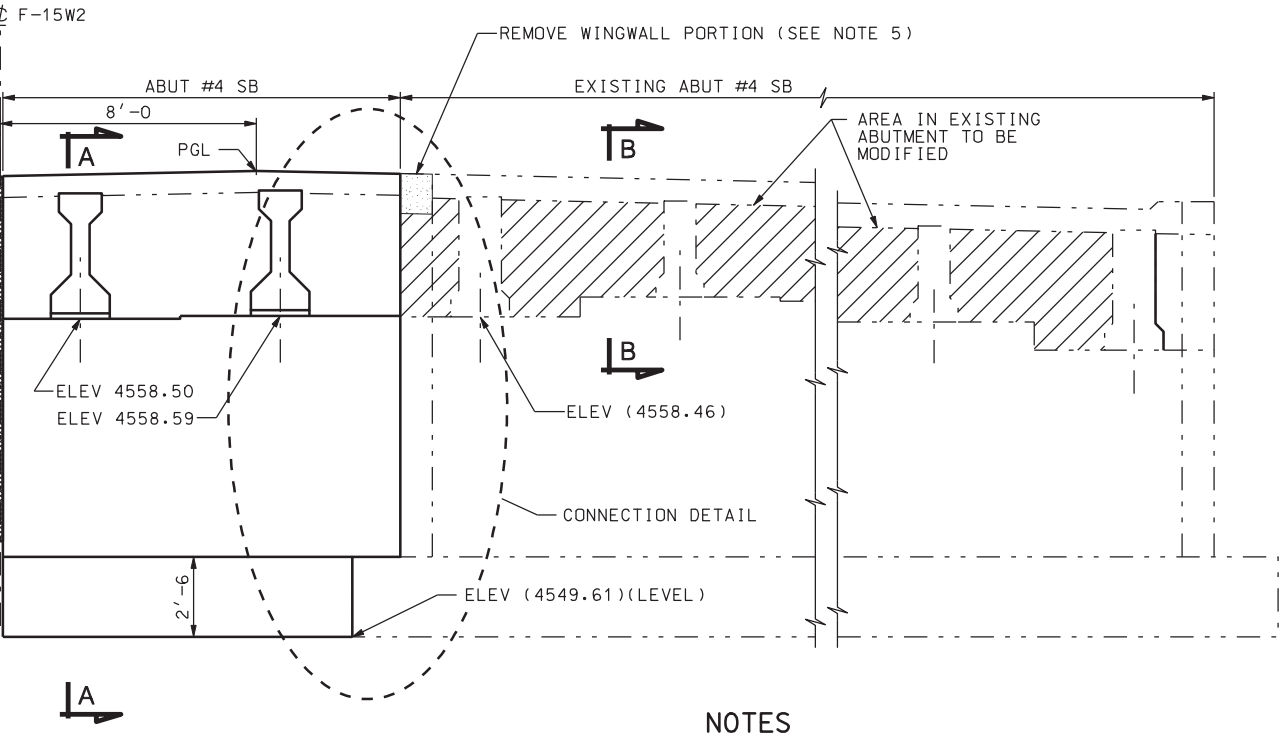


ATION

UPSTATION
NOT SHOWN)

## NOTES

1. FOR SECTION A-A, SECTION B-B, DETAIL A AND CONNECTION DETAIL, SEE "ABUTMENT DETAILS" SHEET.
2. FOR BEARING DETAILS SEE "DIAPHRAGM AND BEARING DETAILS" SHEET.
3. FINISH BRIDGE SEAT BEARING AREA (2" LARGER THAN BEARING PAD) HIGH AND RUBBED OR GROUND LEVEL TO ELEVATION SHOWN ± 1/8". NO GROUTING ALLOWED.
4. FIGURES SHOWN IN PARENTHESIS ARE APPROXIMATE (FEET) BASED ON SURVEY INFORMATION.
5. REMOVE PARTIAL WINGWALL 1'-6 MIN. PROVIDE 6" MIN OF RIGID PLASTIC FOAM BETWEEN TOP OF EXISTING WINGWALL AND BOTTOM OF APPROACH SLAB.
6. ALIGN FRONT FACE OF ABUTMENT WALL WITH FRONT FACE OF EXISTING ABUTMENT WALL.

| NO. | DATE | BY | REMARKS |
|---|---|---|---|

REVISIONS

UTAH DEPARTMENT OF TRANSPORTATION
SALT LAKE CITY, UTAH
STRUCTURES DIVISION

URS

DESIGN PH 12/04 CHECK GTD 12/04
DRAWN DKH 12/04 CHECK PH 12/04
QUANT. CDT 12/04 CHECK CEL 12/04

APPROVAL RECOMM. DATE SENIOR DESIGN ENGR.
APPROVED FOR USE BY UDOT DATE UDOT BRIDGE ENGR.

I-15; CORRIDOR IN UTAH COUNTY
OREM CENTER STREET OVERPASS
ABUTMENT #4 PLAN & ELEVATION
PROJECT NUMBER SP-15-6(52)241

UTAH
COUNTY

F-15W2
DRG. NO.

SHT. 7 OF 27

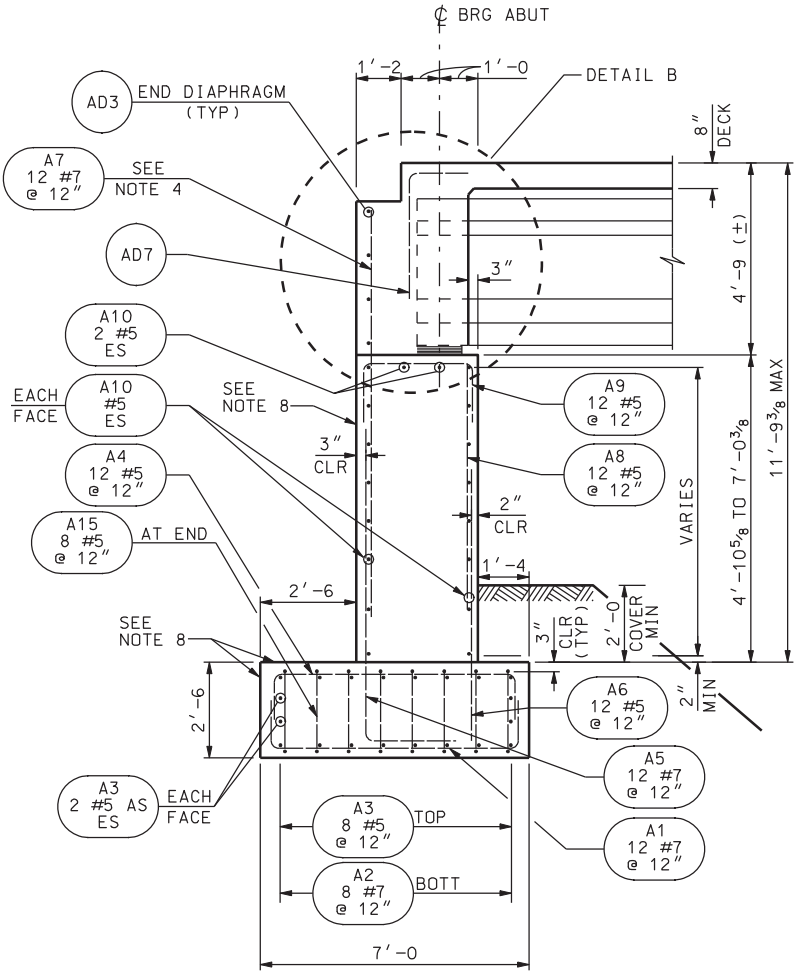


SECTION A-A

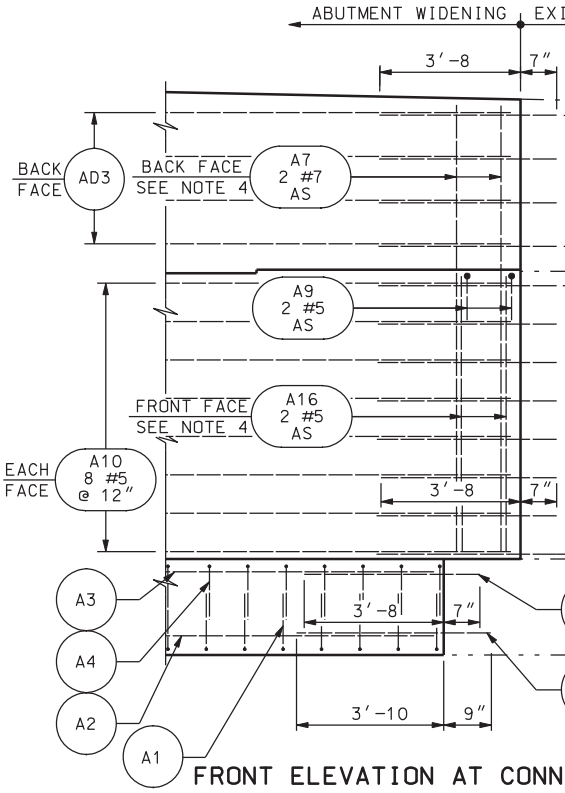


FRONT ELEVATION AT CONN

ALL BA
LOCATIONS

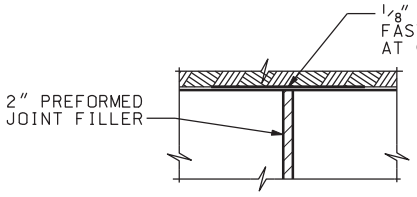


CONTRACTION JOINT DETAIL

USE RUBBER SHEET ON FACES OF JOINT IN CONTACT WITH SOIL (AT NB AND SB ABUTMENT INTERFACE SEE DETAIL A THIS SHEET)

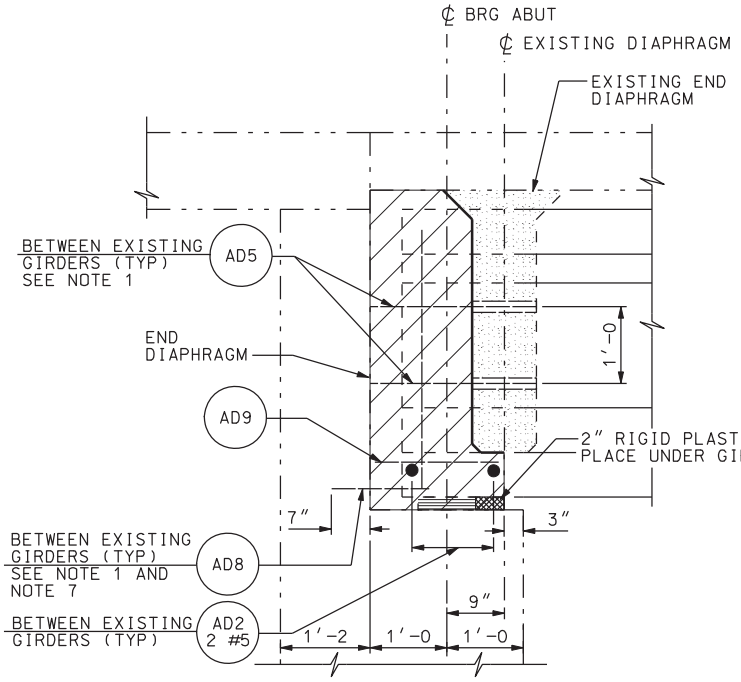


SECTION B-B

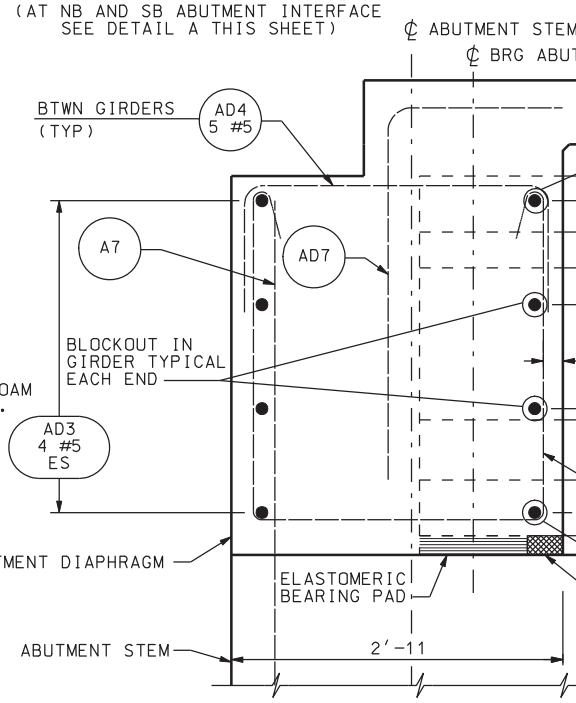


DETAIL B

DGN File: IP_PWPcdns1717\4433_F15_08.dgn

02-MAY-2005

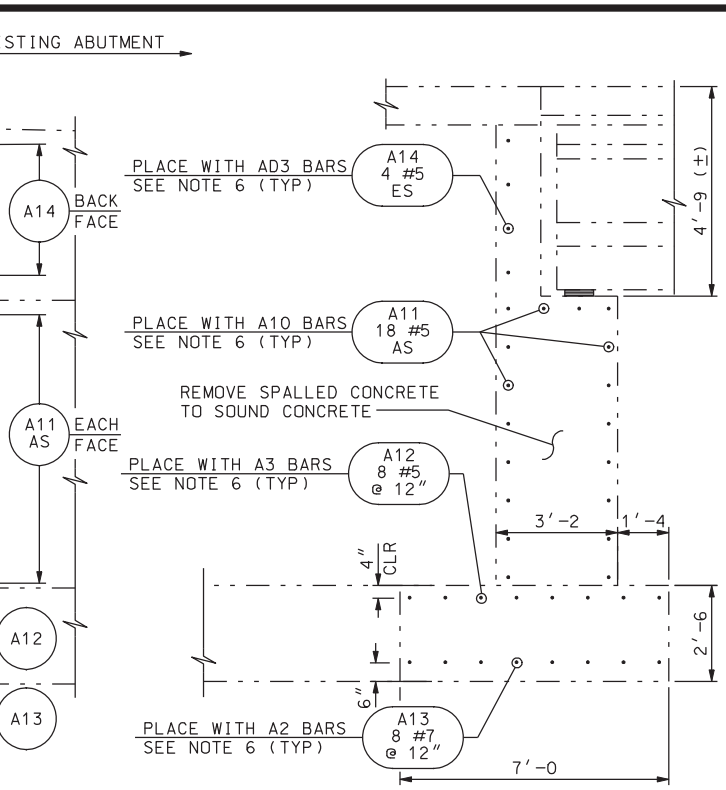


ECTION

EXISTING ABUTMENT SECTION AT CONNECTION

CONNECTION DETAIL

ARS NOT SHOWN FOR CLARITY. BAR
AND CLEARANCES TO BE ADJUSTED FOR
BAR LAP AS REQUIRED.

HEET
NAILS

## NOTES

1. APPROVED EPOXY ANCHORAGE FOR REINFORCING STEEL TO EXISTING ABUTMENT.
2. SEE "ABUTMENT #1 PLAN & ELEVATION" AND "ABUTMENT #4 PLAN & ELEVATION" FOR LOCATION OF SECTIONS AND DETAILS ON THIS SHEET.
3. SPACING OF REINFORCING STEEL MAY BE (±). USE THE NUMBER OF BARS SHOWN.
4. CUT REINFORCING BARS TO MAINTAIN 2" CLEAR BELOW APPROACH SLAB SEAT OR ABUTMENT SEAT AT ABUTMENT.
5. FOR REQUIRED BLOCKOUT IN GIRDER, SEE "GIRDER DETAILS - SPANS 1 & 3" SHEET.
6. PLACE TO MISS EXISTING REINFORCING.
7. PLACE AD8 BARS PRIOR TO AD5 BARS.
8. PLACE BUTYL RUBBER SHEET ON ABUTMENT CONCRETE SUFACES IN CONTACT WITH SOIL BETWEEN NORTHBOUND AND SOUTHBOUND STRUCTURES, SEE CONTRACTION JOINT DETAIL.

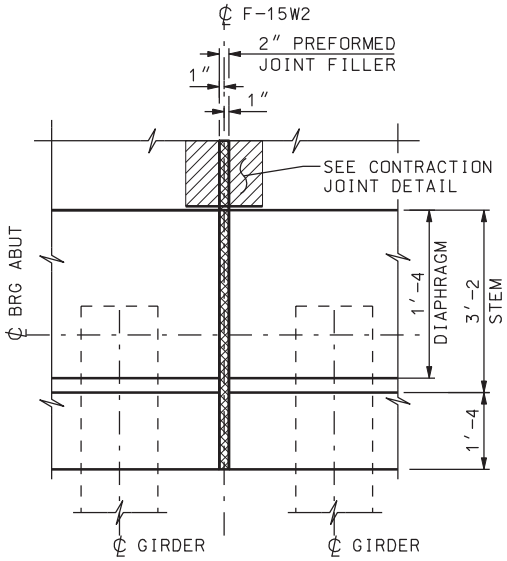


DETAIL A

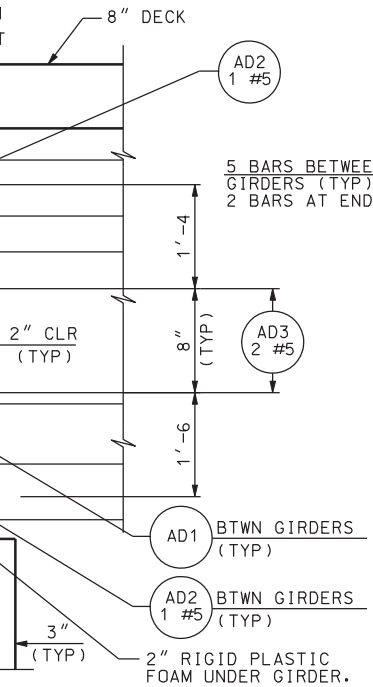


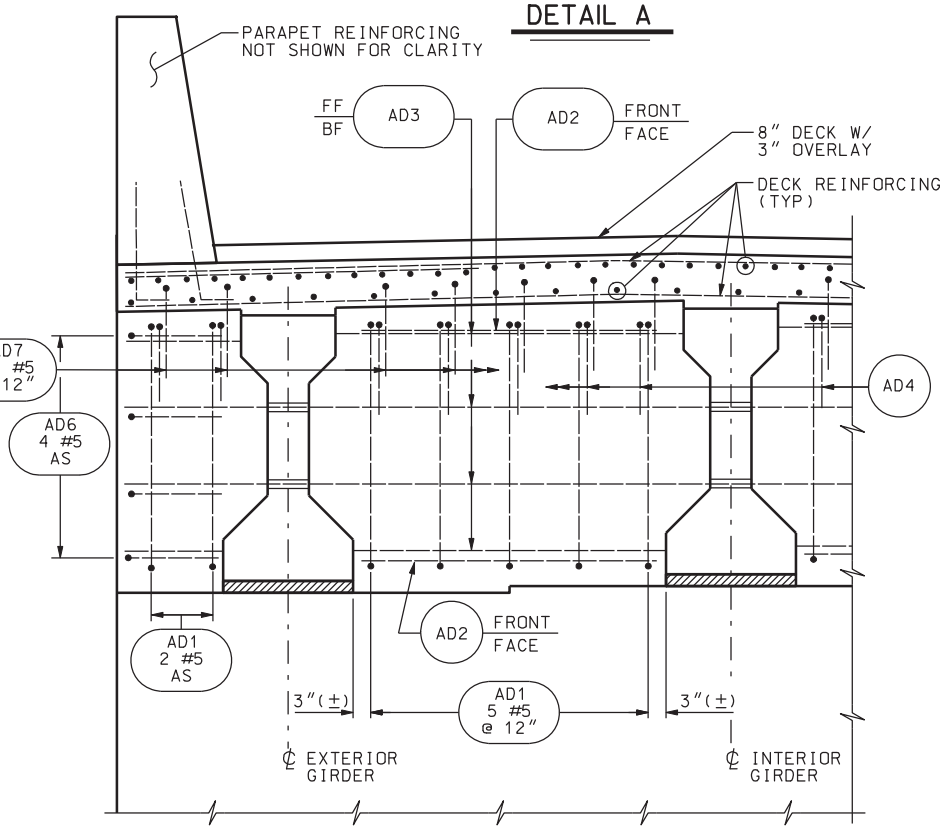


ABUTMENT DIAPHRAGM DETAIL

(TYPICAL REINFORCING BETWEEN GIRDERS AT NEW END DIAPHRAGMS)

| NO. | DATE | BY | REMARKS |
|---|---|---|---|

REVISIONS

UTAH DEPARTMENT OF TRANSPORTATION
SALT LAKE CITY, UTAH
STRUCTURES DIVISION

URS

DESIGN PH 12/04 CHECK GTD 12/04
DRAWN DKH 12/04 CHECK PH 12/04
QUANT. CDT 12/04 CHECK CEL 12/04

APPROVAL RECOMM. DATE SENIOR DESIGN ENGR.
APPROVED FOR USE BY UDOT DATE UDOT BRIDGE ENGR.

I-15; CORRIDOR IN UTAH COUNTY
OREM CENTER STREET OVERPASS
ABUTMENT DETAILS

PROJECT NUMBER SP-15-6(52)241

UTAH
COUNTY

F-15W2
DRG. NO.

SHT. 8 OF 27

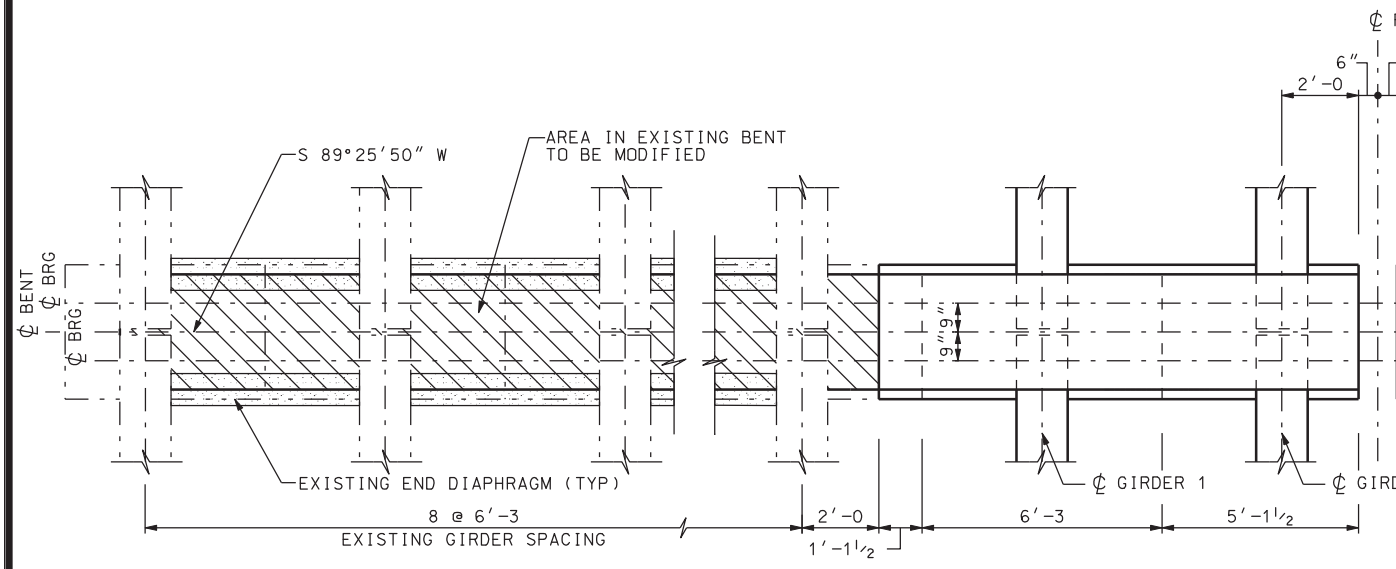


PLA

LOOKING UP
(DECK NOT

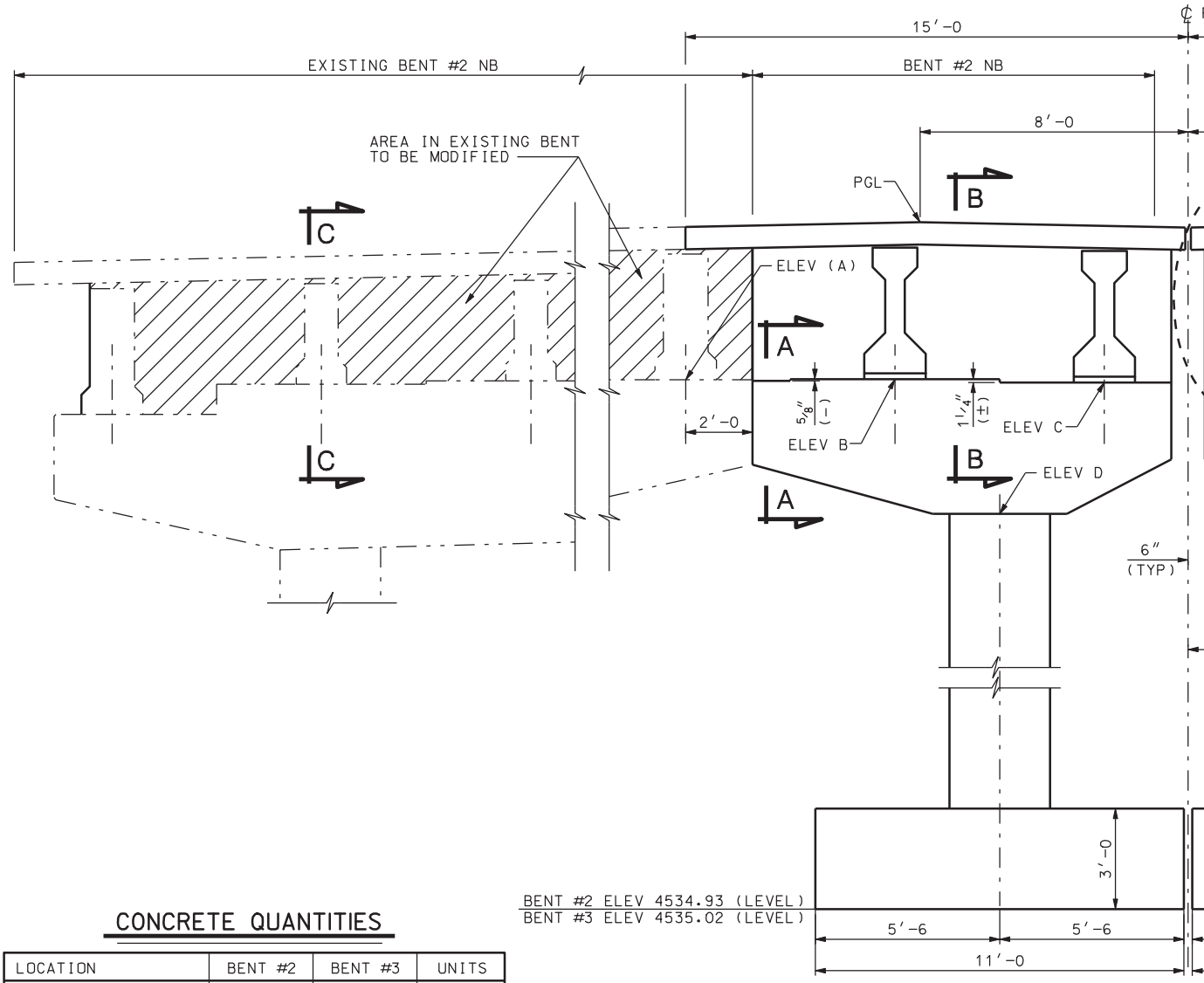


ELEVAT

LOOKING UP
BENT #2 SHOWN; BE
(PARAPET NO

## CONCRETE QUANTITIES

| LOCATION | BENT #2 | BENT #3 | UNITS |
|---|---|---|---|
| FOOTING | 22.0 | 22.0 | CU YDS |
| COLUMNS | 11.4 | 11.1 | CU YDS |
| BENT CAP | 12.7 | 12.7 | CU YDS |
| DIAPHRAGM | 9.8 | 9.8 | CU YDS |
| MODIFIED DIAPHRAGM | 12.4 | 12.4 | CU YDS |
| TOTAL | 68.3 | 68.0 | CU YDS |

DGN File:IP_PWPcdns1717\4433_F15_09.dgn
02-MAY-2005

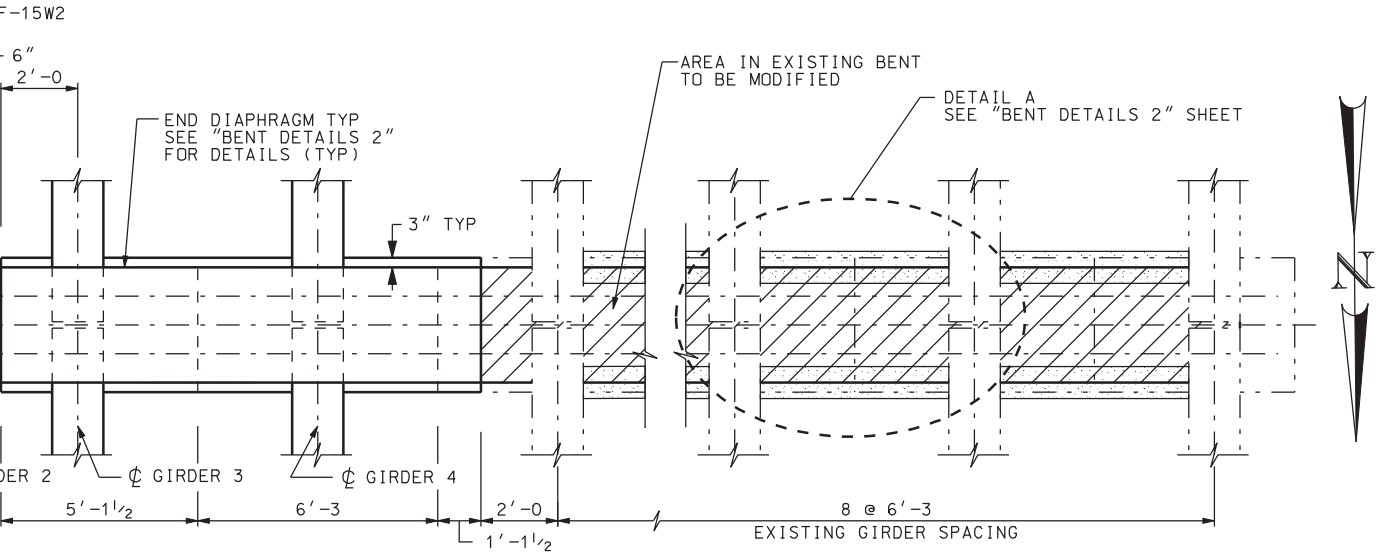


N

STATION
SHOWN)

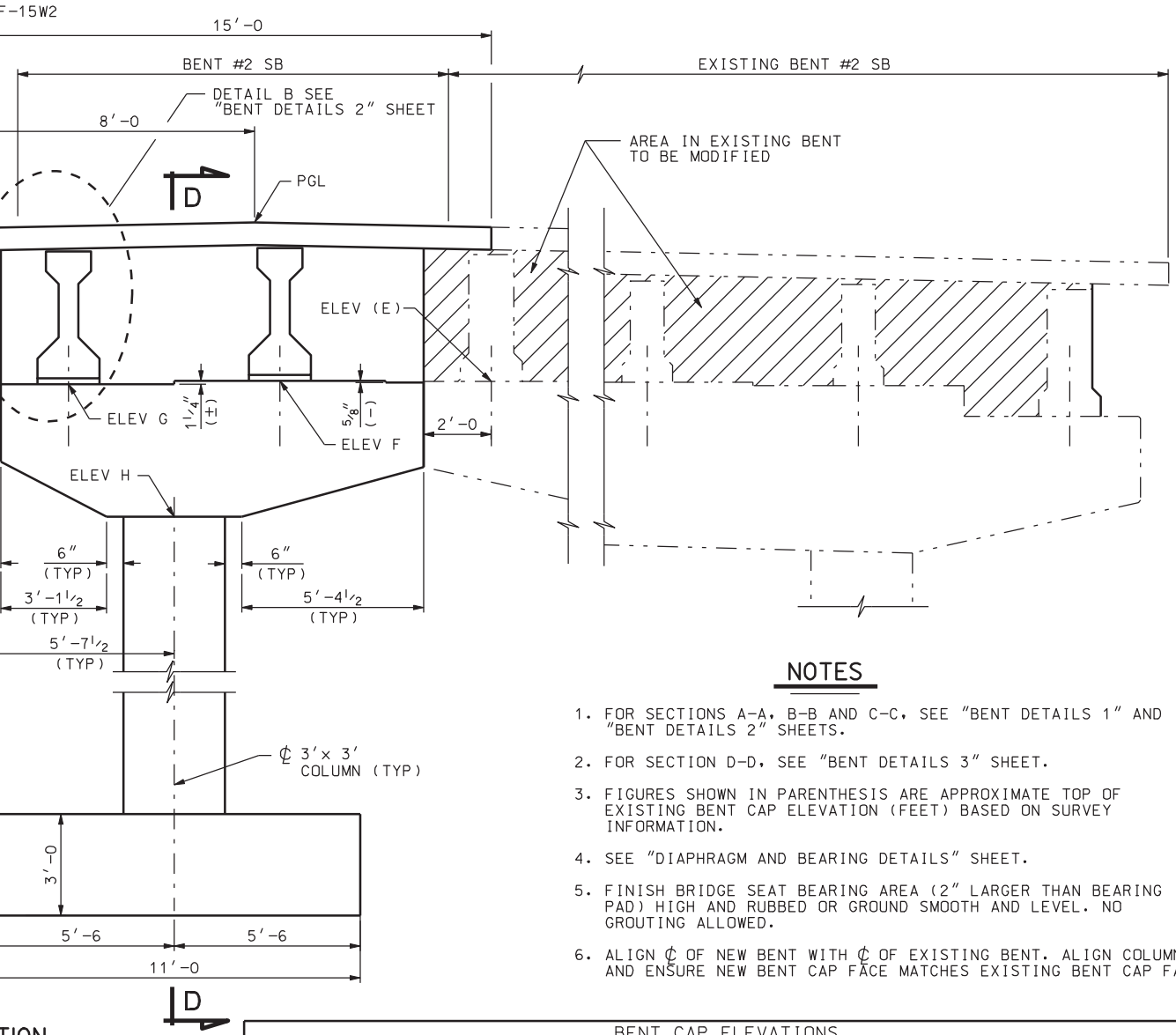


TION

STATION
ENT #3 SIMILAR
T SHOWN)

## NOTES

1. FOR SECTIONS A-A, B-B AND C-C, SEE "BENT DETAILS 1" AND "BENT DETAILS 2" SHEETS.
2. FOR SECTION D-D, SEE "BENT DETAILS 3" SHEET.
3. FIGURES SHOWN IN PARENTHESIS ARE APPROXIMATE TOP OF EXISTING BENT CAP ELEVATION (FEET) BASED ON SURVEY INFORMATION.
4. SEE "DIAPHRAGM AND BEARING DETAILS" SHEET.
5. FINISH BRIDGE SEAT BEARING AREA (2" LARGER THAN BEARING PAD) HIGH AND RUBBED OR GROUND SMOOTH AND LEVEL. NO GROUTING ALLOWED.
6. ALIGN ℄ OF NEW BENT WITH ℄ OF EXISTING BENT. ALIGN COLUMNS AND ENSURE NEW BENT CAP FACE MATCHES EXISTING BENT CAP FACE.

BENT CAP ELEVATIONS

| LOCATION | ELEVATIONS | | | | | | | |
|---|---|---|---|---|---|---|---|---|
| | A | B | C | D | E | F | G | H |
| BENT #2 | 4559.01 | 4559.06 | 4558.96 | 4554.96 | 4559.06 | 4559.06 | 4558.96 | 4554.96 |
| BENT #3 | 4558.71 | 4558.78 | 4558.69 | 4554.68 | 4558.71 | 4558.78 | 4558.69 | 4554.68 |

| NO. | DATE | BY | REMARKS |
|---|---|---|---|
| | | | |

REVISIONS

UTAH DEPARTMENT OF TRANSPORTATION
SALT LAKE CITY, UTAH
STRUCTURES DIVISION

URS

DESIGN PH 12/04 CHECK CEL 12/04
DRAWN DKH 12/04 CHECK CEL 12/04
QUANT. CDT 12/04 CHECK CEL 12/04

APPROVAL RECOMM. DATE SENIOR DESIGN ENGR.
APPROVED FOR USE BY UDOT DATE UDOT BRIDGE ENGR.

I-15; CORRIDOR IN UTAH COUNTY
OREM CENTER STREET OVERPASS
BENT PLAN & ELEVATION

PROJECT NUMBER SP-15-6(52)241

UTAH
COUNTY

F-15W2
DRG. NO.

SHT. 9 OF 27

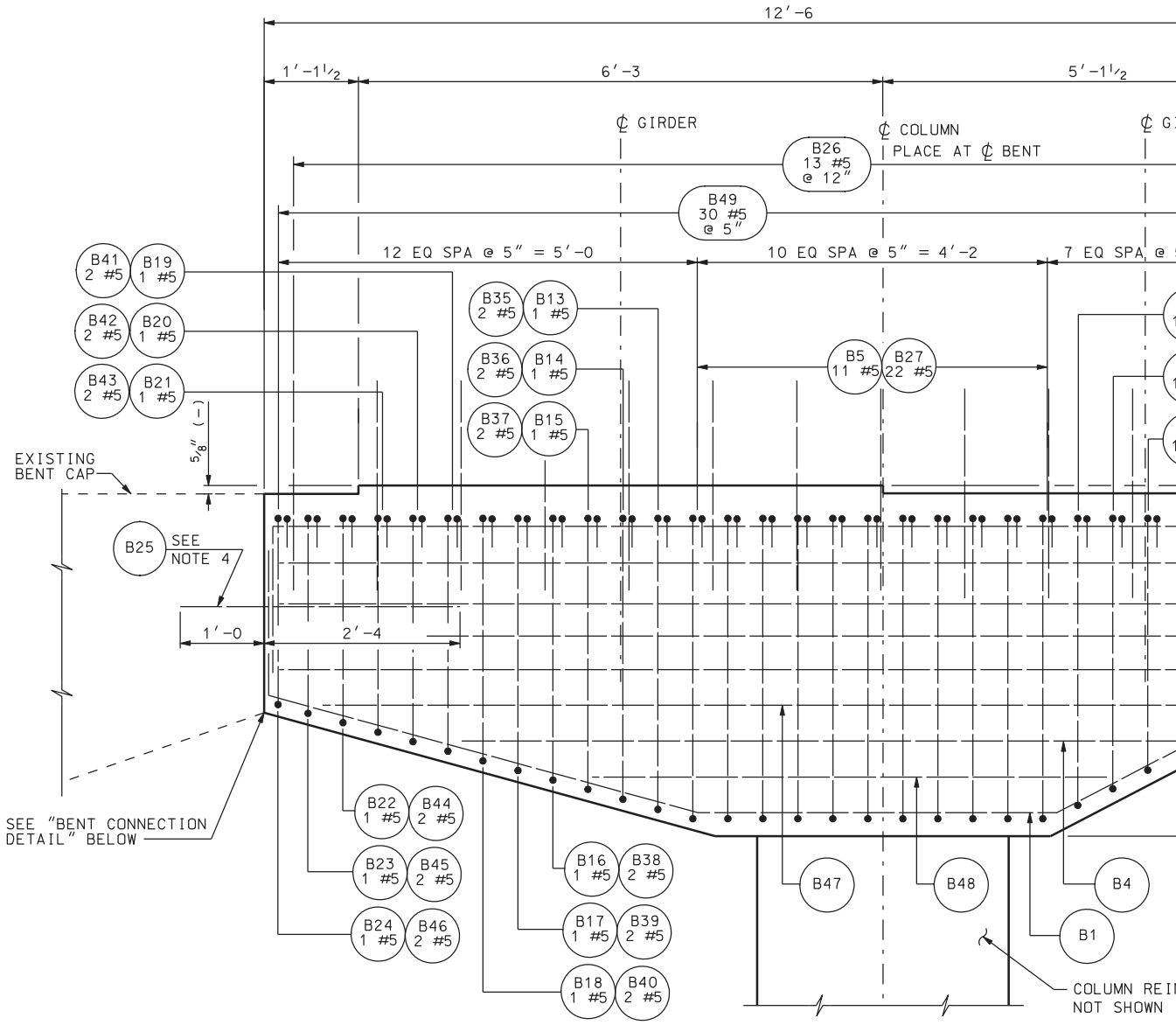


## BENT CAP DETAIL

(NB SHOWN, SB SIMILAR)

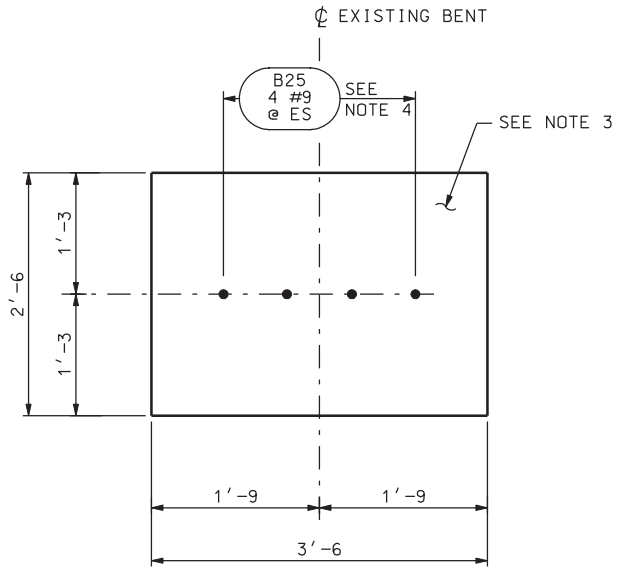


## BENT CONNECTION DETAIL

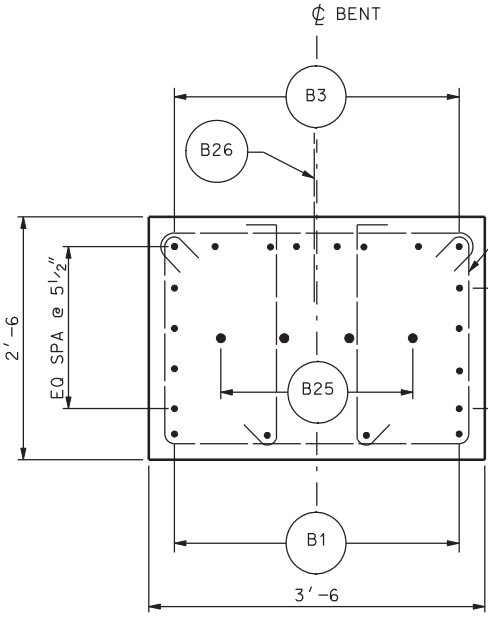


## SECTION A-A

DGN File:IP_PWPcdms1717\4433_F15_10.dgn

02-MAY-2005

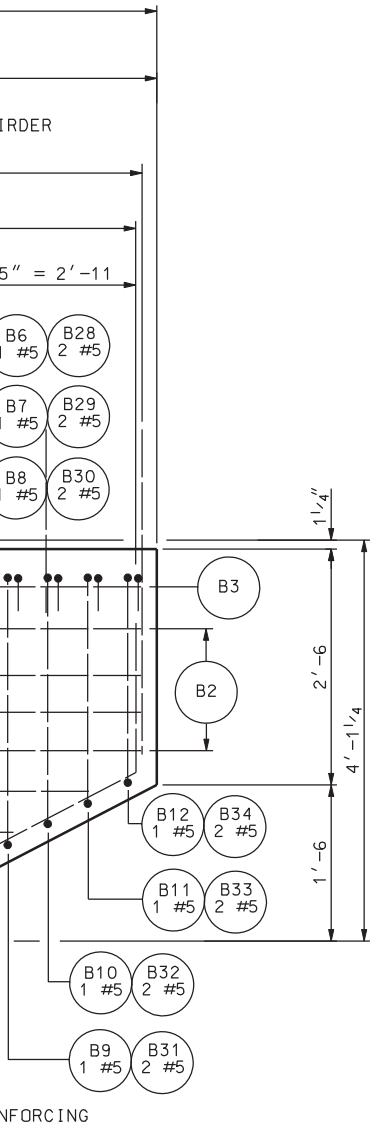


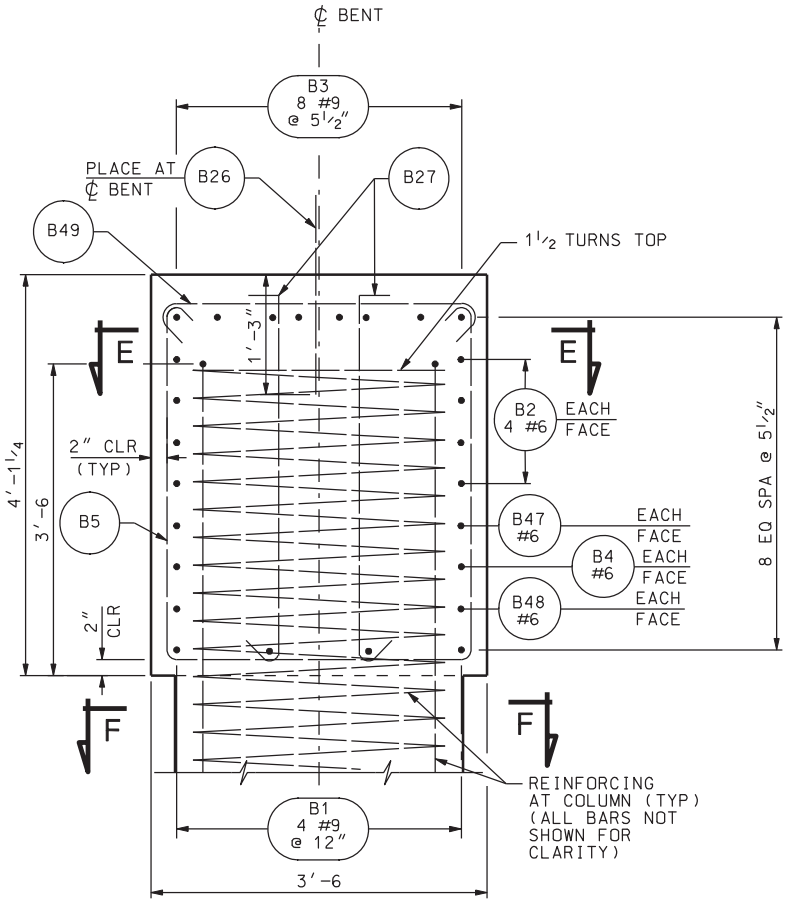


## BENT CAP DETAIL @ ℄ COLUMN

(NB SHOWN, SB SIMILAR)

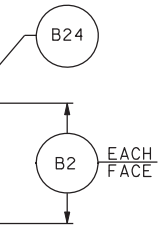


## NOTES

1. PROVIDE 2″ MIN COVER TO REINFORCING STEEL UNLESS NOTED OTHERWISE.
2. SEE "BENT DETAILS 2" SHEET FOR SECTIONS E-E & F-F AND "BENT PLAN AND ELEVATION" SHEET FOR LOCATION OF SECTION A-A.
3. FACE OF EXISTING TO BE ROUGHENED BEFORE DOWELS ARE PLACED AND FORMS ARE SET FOR NEW CONSTRUCTION. REMOVE SPALLED CONCRETE TO SOUND CONCRETE.
4. APPROVED EPOXY ANCHORAGE FOR REINFORCING STEEL TO EXISTING BENT CAP. PLACE TO MISS EXISTING REINFORCING STEEL.
5. SPACING OF REINFORCING STEEL MAY BE (±). USE THE NUMBER OF BARS SHOWN.
6. ALIGN NEW BENT CAP FACE WITH EXISTING BENT CAP FACE.

| NO. | DATE | BY | REMARKS |
|---|---|---|---|

REVISIONS

UTAH DEPARTMENT OF TRANSPORTATION
SALT LAKE CITY, UTAH
STRUCTURES DIVISION

URS

DESIGN PH 12/04 CHECK GTD 12/04
DRAWN DKH 12/04 CHECK PH 12/04
QUANT. CDT 12/04 CHECK CEL 12/04

APPROVAL RECOMM. DATE SENIOR DESIGN ENGR.
APPROVED FOR USE BY UDOT DATE UDOT BRIDGE ENGR.

I-15; CORRIDOR IN UTAH COUNTY
OREM CENTER STREET OVERPASS
BENT DETAILS 1
PROJECT NUMBER SP-15-6(52)241

UTAH
COUNTY

F-15W2
DRG. NO.

SHT. 10 OF 27

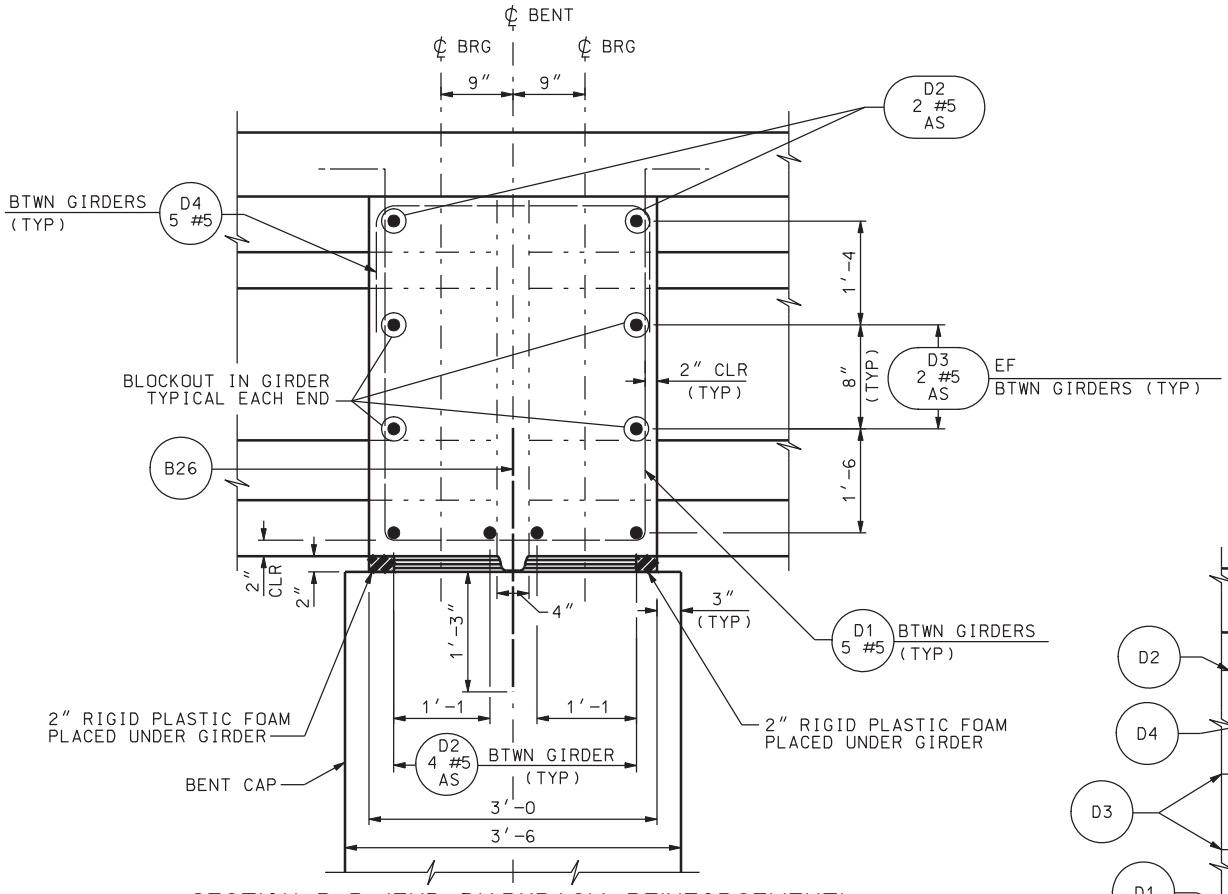


## SECTION B-B (END DIAPHRAGM REINFORCEMENT)

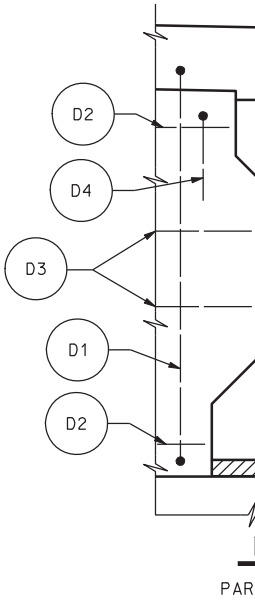


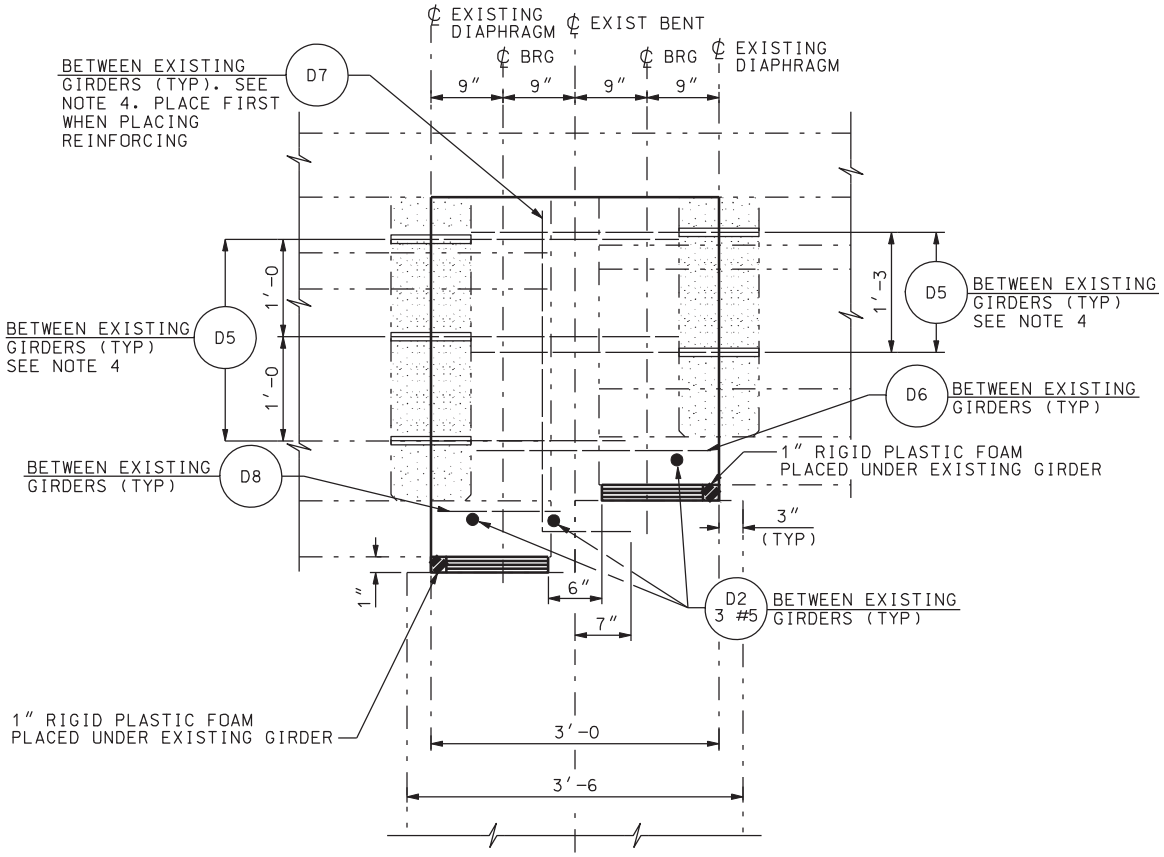


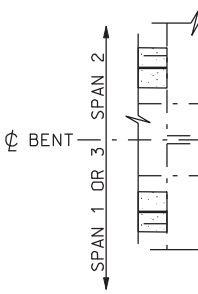


## SECTION C-C (END DIAPHRAGM REINFORCEMENT)

SECTION SHOWN FOR BENT #2; BENT #3 OPPOSITE

DGN File:IP_PWPcdms1717\4433_F15_11.dgn
02-MAY-2005

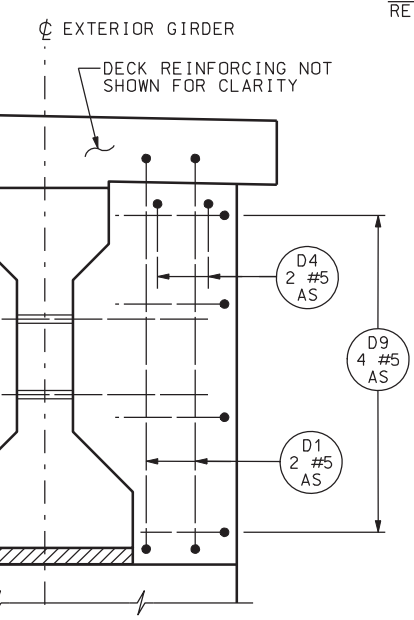


DETAIL B

APET NOT SHOWN

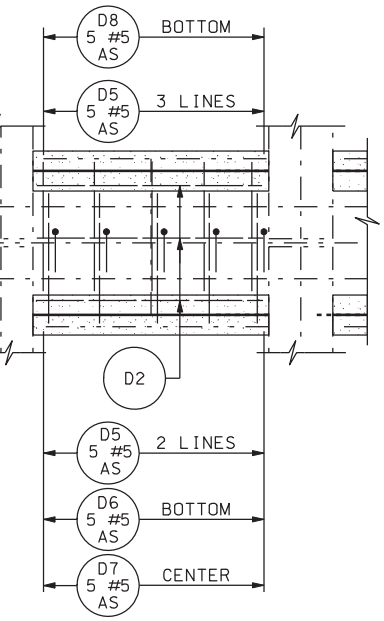


DETAIL A

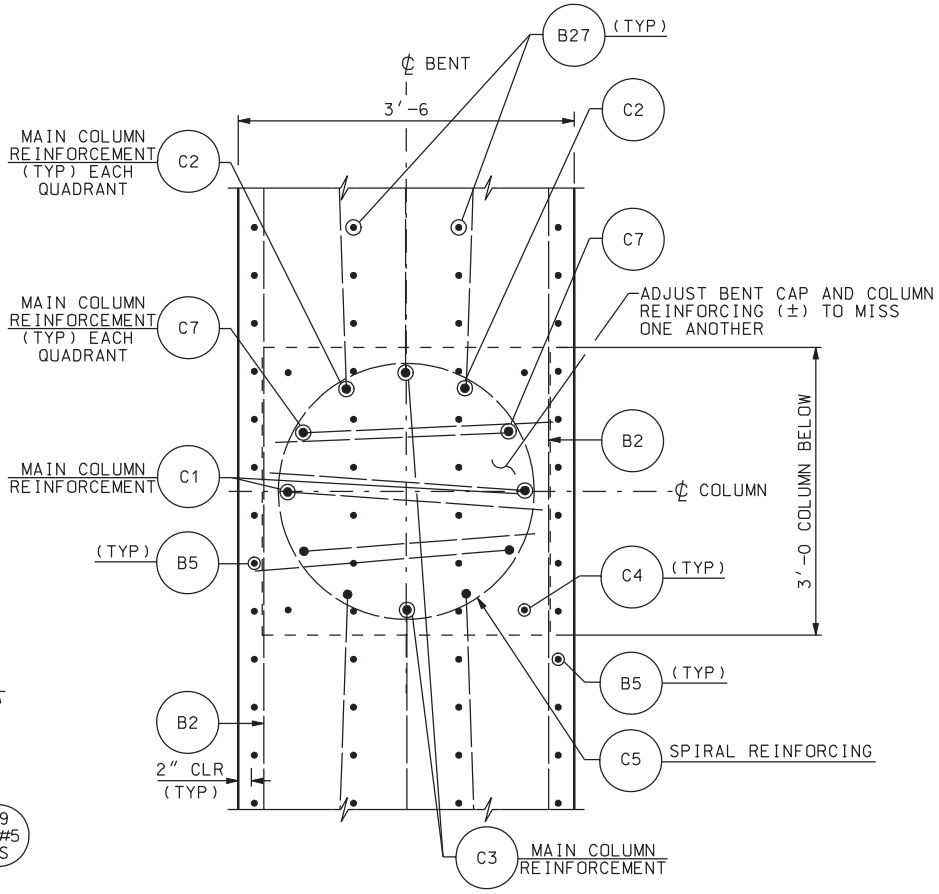


SECTION E-E

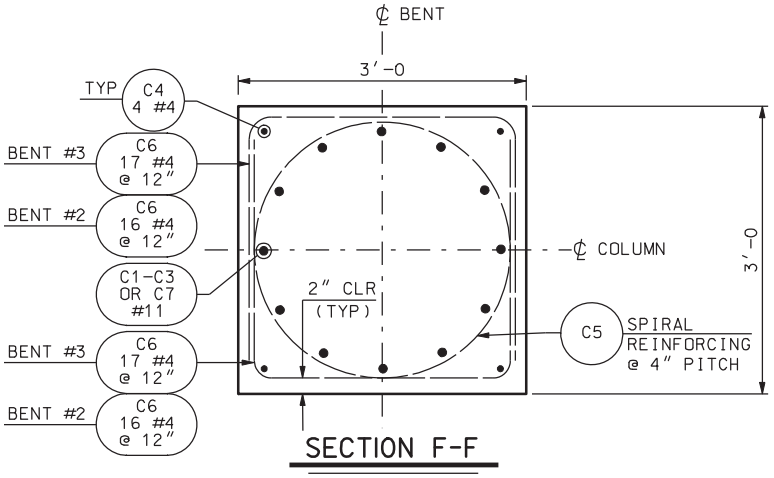


SECTION F-F

## NOTES

1. PROVIDE 2" MIN COVER TO REINFORCING STEEL UNLESS NOTED OTHERWISE.
2. SEE "BENT PLAN AND ELEVATION" FOR LOCATIONS OF SECTIONS B-B & C-C, DETAIL A AND DETAIL B AND SEE "BENT DETAILS 1" FOR SECTIONS E-E AND F-F.
3. FOR REQUIRED BLOCKOUT IN GIRDER SEE "GIRDER DETAILS - SPANS 1 & 3" AND "GIRDER DETAILS - SPAN 2" SHEETS.
4. APPROVED EPOXY ANCHORAGE FOR REINFORCING STEEL TO EXISTING CONCRETE.
5. SPACING OF REINFORCING STEEL MAY BE (±). USE THE NUMBER OF BARS SHOWN.

| NO. | DATE | BY | REMARKS |
|---|---|---|---|
| | | | |

REVISIONS

UTAH DEPARTMENT OF TRANSPORTATION
SALT LAKE CITY, UTAH
STRUCTURES DIVISION

URS

DESIGN PH 12/04 CHECK CEL 12/04
DRAWN DKH 12/04 CHECK CEL 12/04
QUANT. CDT 12/04 CHECK CEL 12/04

APPROVAL RECOMM. DATE SENIOR DESIGN ENGR.
APPROVED FOR USE BY UDOT DATE UDOT BRIDGE ENGR.

I-15; CORRIDOR IN UTAH COUNTY
OREM CENTER STREET OVERPASS
BENT DETAILS 2

PROJECT NUMBER SP-15-6(52)241

UTAH
COUNTY

F-15W2
DRG. NO.

SHT. 11 OF 27

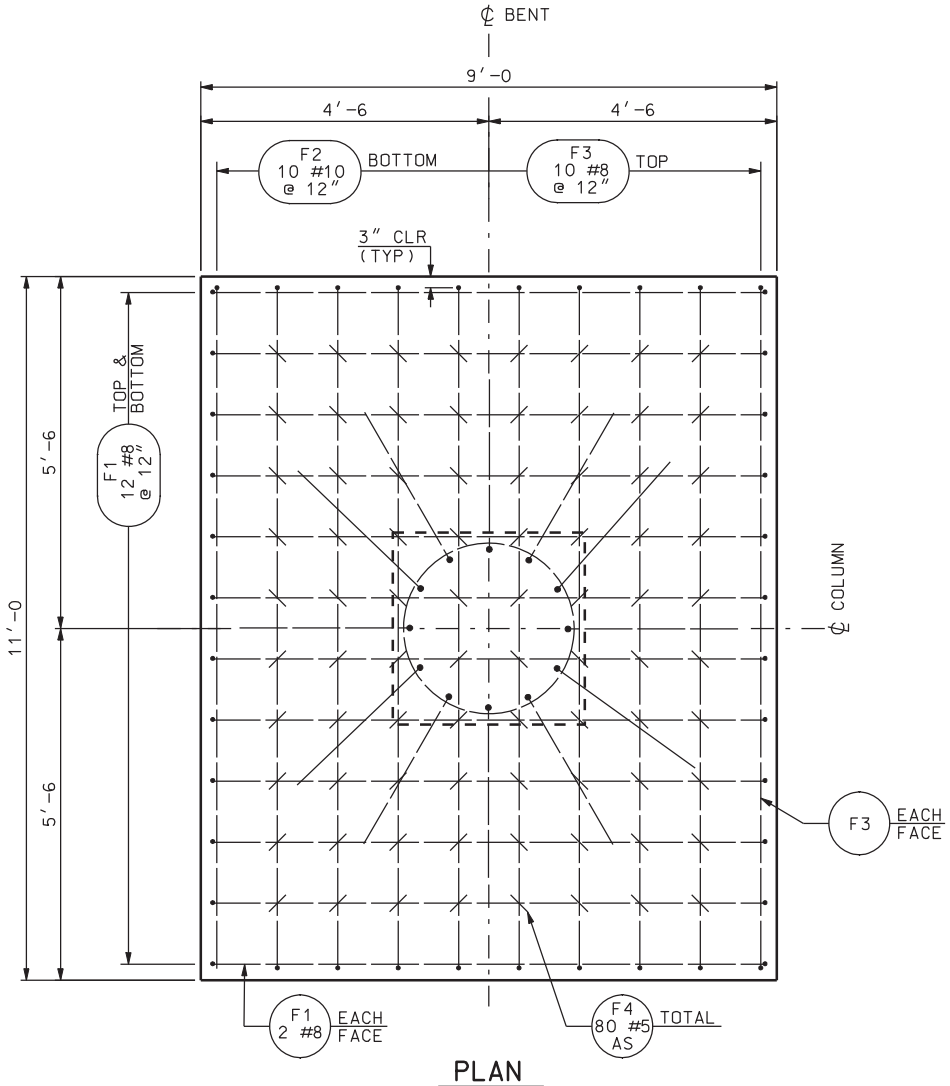


PLAN

NO

1. SEE "BENT PLAN & E

2. SPACING OF REINFOR
USE THE NUMBER OF

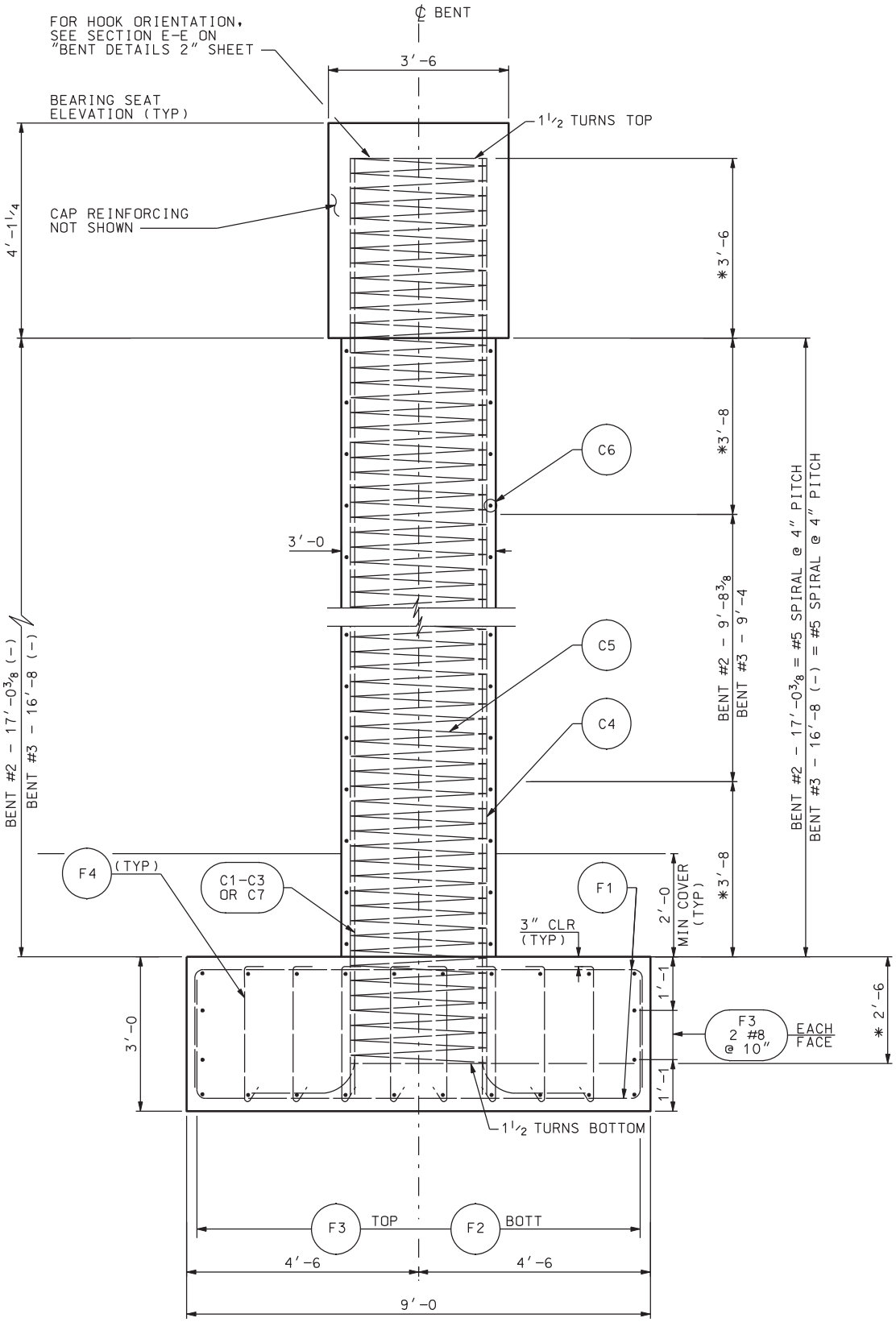


## SECTION D-D

AT COLUMNS

* LAP SPLICE OR SPIRAL SPLICE NOT ALLOWED

## TES

LEVATION" FOR SECTION D-D.

CING STEEL MAY BE (±).
BARS SHOWN.

| NO. | DATE | BY | REMARKS |
|---|---|---|---|
| | | | |

REVISIONS

UTAH DEPARTMENT OF TRANSPORTATION
SALT LAKE CITY, UTAH
STRUCTURES DIVISION

URS

DESIGN PH 12/04 CHECK CEL 12/04
DRAWN DKH 12/04 CHECK CEL 12/04
QUANT. CDT 12/04 CHECK CEL 12/04

APPROVAL RECOMM. DATE SENIOR DESIGN ENGR.
APPROVED FOR USE BY UDOT DATE UDOT BRIDGE ENGR.

I-15; CORRIDOR IN UTAH COUNTY
OREM CENTER STREET OVERPASS
BENT DETAILS 3

PROJECT NUMBER SP-15-6(52)241

UTAH
COUNTY

F-15W2
DRG. NO.

SHT. 12 OF 27

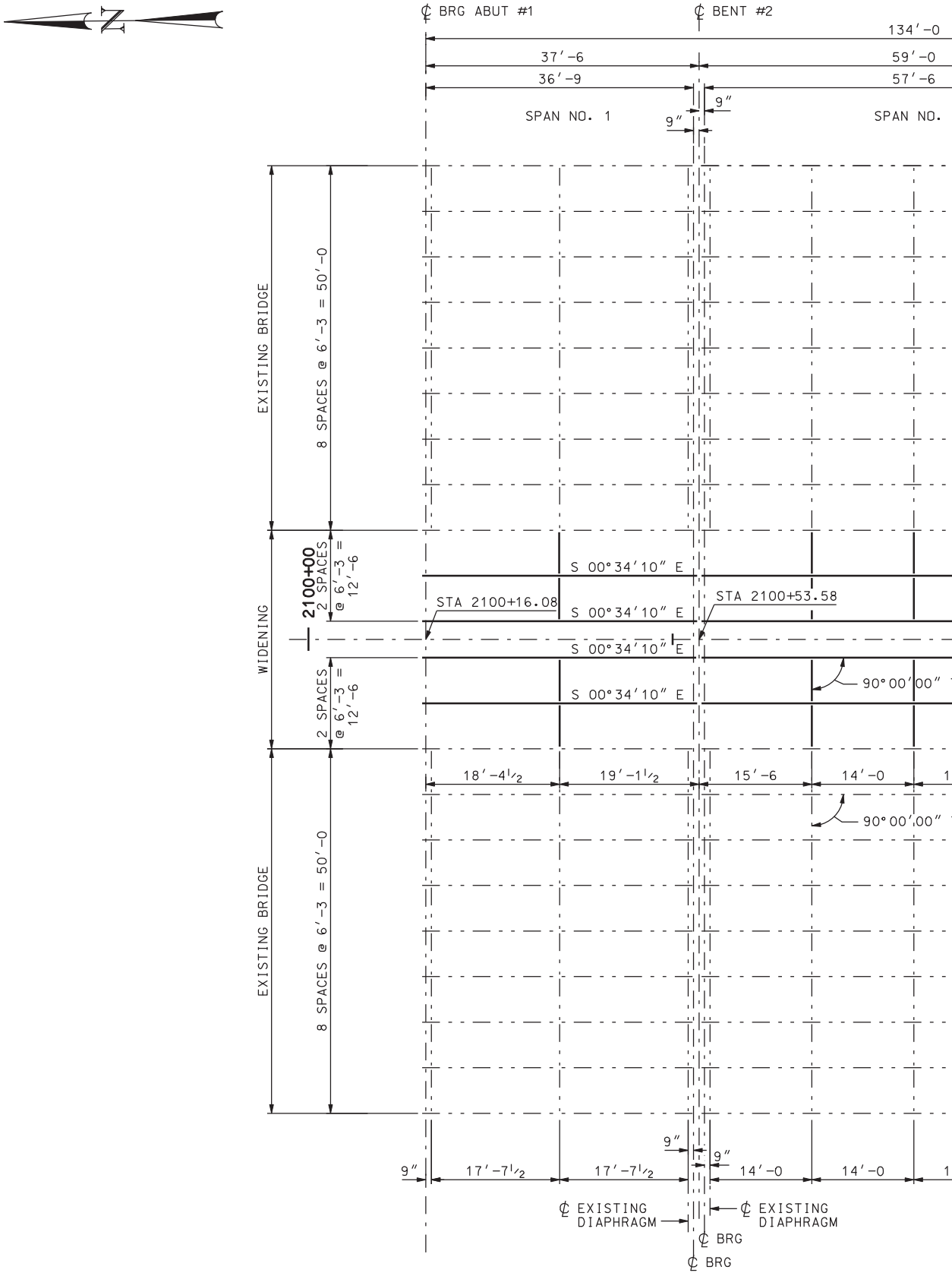


FRAMING P

DGN File:IP_PWPcdns1717\4433_F15_13.dgn

02-MAY-2005

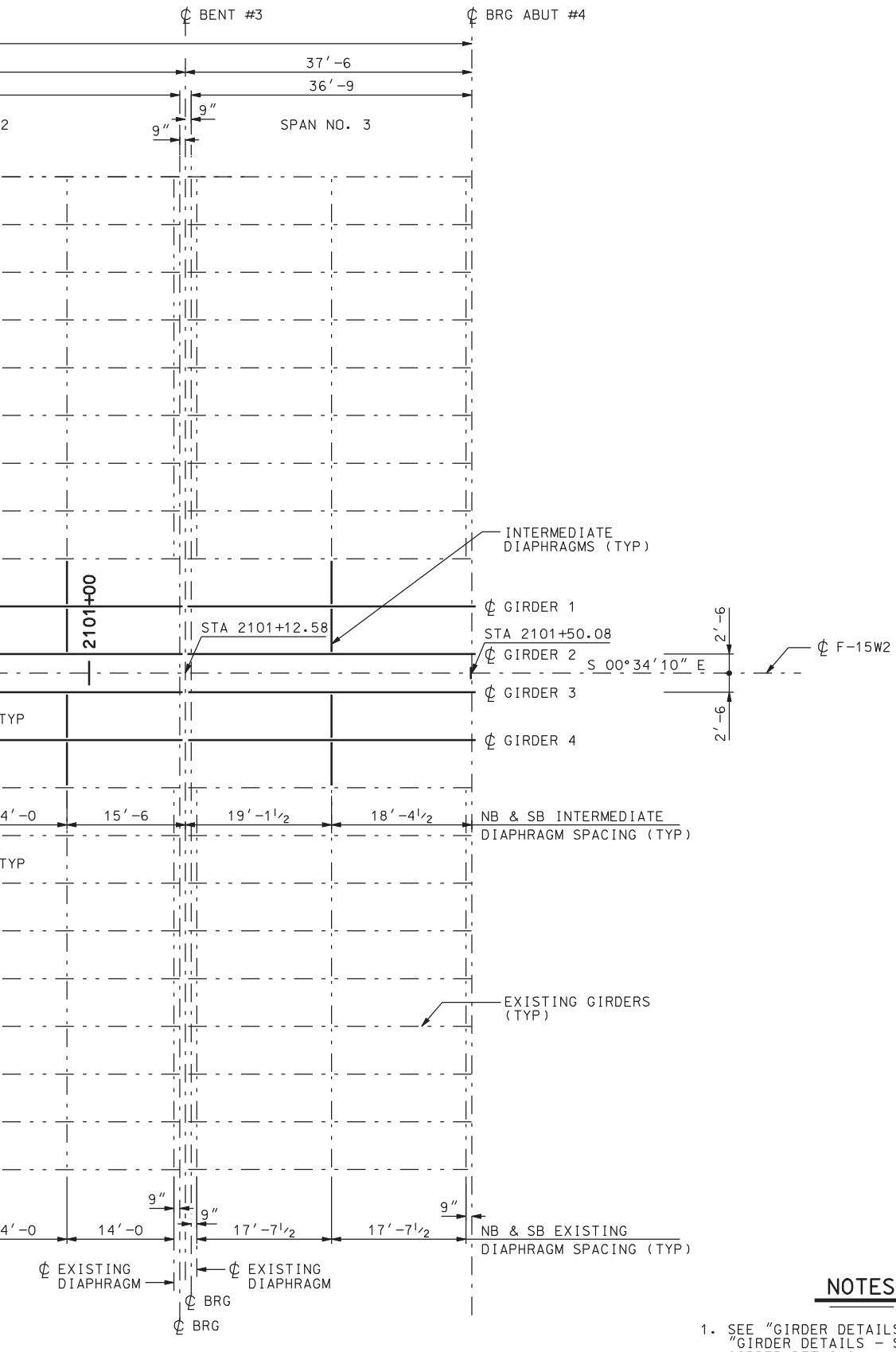


PLAN

## NOTES

1. SEE "GIRDER DETAILS - SPAN 1 & 3" AND "GIRDER DETAILS - SPAN 2" SHEETS FOR GIRDER DETAILS.
2. ALL ABUTMENTS AND BENTS ARE ON A BEARING S 89°25′50 W.
3. FOR INTERMEDIATE DIAPHRAGM DETAILS SEE "DIAPHRAGM AND BEARING DETAILS" SHEET.

| NO. | DATE | BY | REMARKS |
|---|---|---|---|
| | | | |

REVISIONS

UTAH DEPARTMENT OF TRANSPORTATION
SALT LAKE CITY, UTAH
STRUCTURES DIVISION

URS

DESIGN PH 12/04 CHECK GTD 12/04
DRAWN DKH 12/04 CHECK PH 12/04
QUANT. CDT 12/04 CHECK CEL 12/04

APPROVAL RECOMM. DATE SENIOR DESIGN ENGR.
APPROVED FOR USE BY UDOT DATE UDOT BRIDGE ENGR.

I-15; CORRIDOR IN UTAH COUNTY
OREM CENTER STREET OVERPASS
FRAMING PLAN
PROJECT NUMBER SP-15-6(52)241

UTAH
COUNTY

F-15W2
DRG. NO.

SHT. 13 OF 27

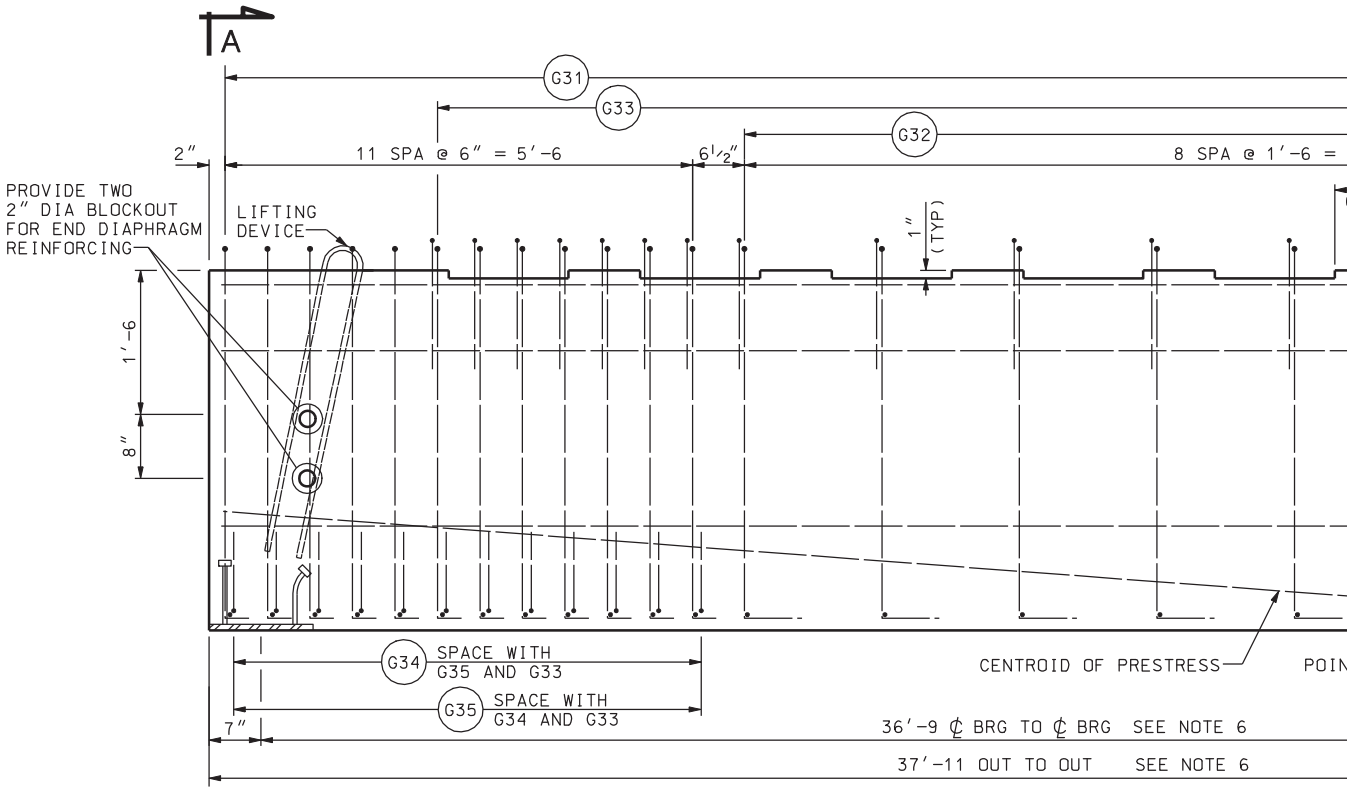


PARTIAL ELEVATION

(SPANS 1 & 3; GIRDERS 1 – 4)

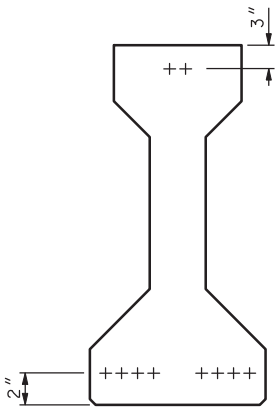


STRAND PATTERN

(STRAND PATTERN AT ENDS)
NO. OF STRAIGHT STRANDS = 8
NO. OF DRAPED STRANDS = 2

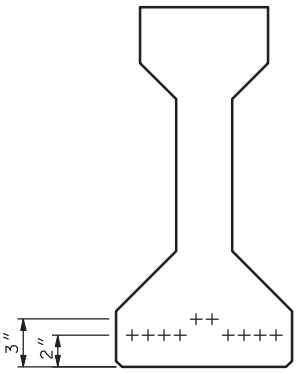


STRAND PATTERN

(STRAND PATTERN AT CENTER)

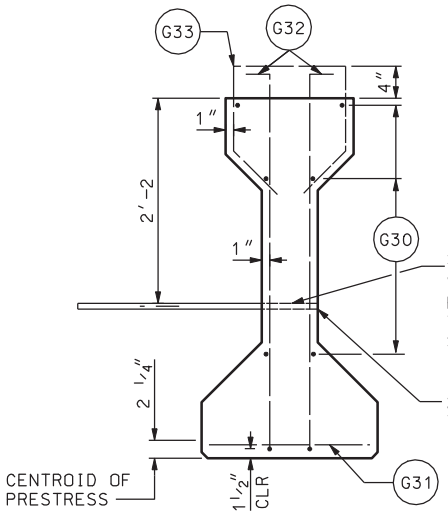


SECTION B-B

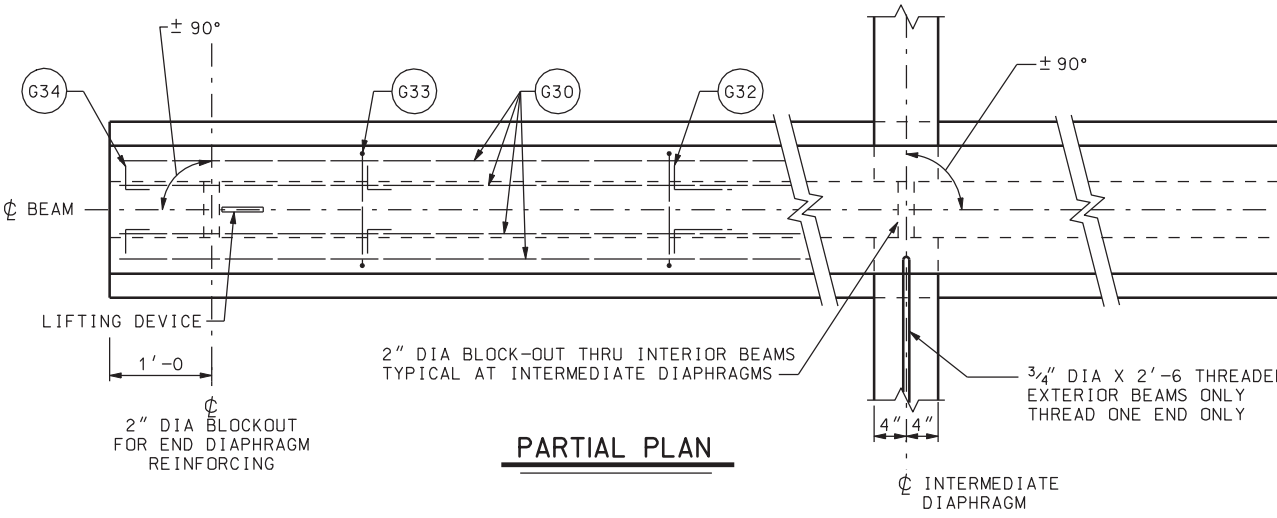


PARTIAL PLAN

DGN File: IP_PWPcdnsl717\4433_F15_14.dgn

02-MAY-2005

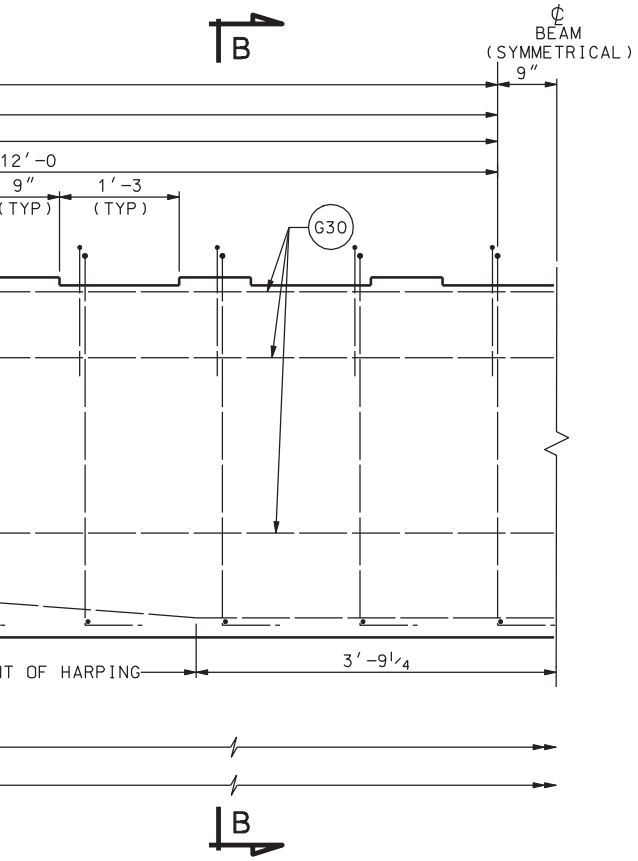


## REINFORCING STEEL SCHEDULE

| MARK | SIZE NO. | LENGTH | NO. REQ'D PER GIRDER | SKETCH |
|---|---|---|---|---|
| * G30 | 5 | 37′-7 | 6 | |
| G31 | 4 | 1′-6 | 42 | |
| G32 | 5 | 5′-1 | 36 | 3″, X, Y, 10″, Z, 4′-0 |
| G33 | 4 | 4′-4 | 32 | 10″, 9″, 1′-2, 1, 1 |
| G34 | 5 | 4′-6 | 48 | 3″, X, Y, 3″, Z, 4′-0 |
| G35 | 4 | 4′-8 | 24 | 5″, 7″, 7″, 1′-8, 1, 1 |

* LAP G30 BARS 3′-3″ MIN. AS NECESSARY

## NOTES

1. UNLESS OTHERWISE SHOWN, ALL DIMENSIONS ARE OUT TO OUT OF BARS.
2. PLACE BAR G31 IMMEDIATELY ABOVE LOWER ROW OF PRESTRESSING STRANDS.
3. USE ½″ DIAMETER SEVEN-WIRE STRESS RELIEVED PRESTRESSING STRANDS (GRADE 270).
4. SEE "DIAPHRAGM AND BEARING DETAILS" SHEET FOR BEARING PLATE DETAILS AND BEAM DETAILS AT BENT AND ABUTMENT.
5. USE COATED REINFORCING BARS CONFORMING TO AASHTO DESIGNATION M 284 OR M 111 AND M 31, GRADE 60.
6. FIELD VERIFY REQUIRED GIRDER LENGTH PRIOR TO GIRDER FABRICATION.

¾″ DIA X 2′-6 THREADED ROD WITH CONCRETE ANCHORS AT THE INTERIOR FACE OF THE EXTERIOR BEAMS ONLY. TYPICAL AT INTERMEDIATE DIAPHRAGMS. SEE FRAMING PLAN FOR LOCATIONS.

2″ DIA BLOCK-OUT THRU INTERIOR BEAMS. TYPICAL AT INTERMEDIATE DIAPHRAGMS.

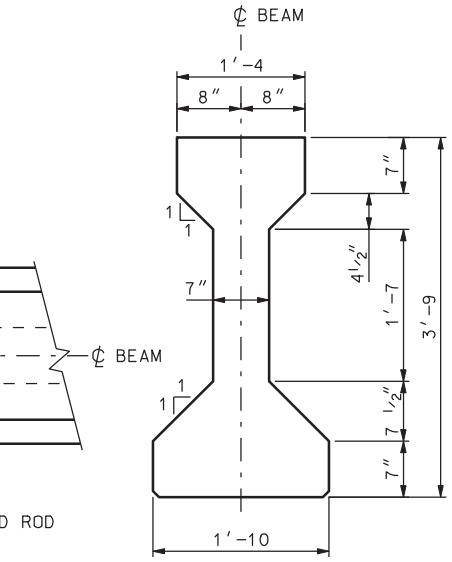


TYPICAL SECTION

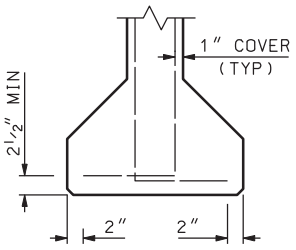


ALTERNATE BAR PLACEMENT

G31 BARS MAY BE ELIMINATED PROVIDED G32 BARS ARE MODIFIED AND PLACED AS SHOWN.

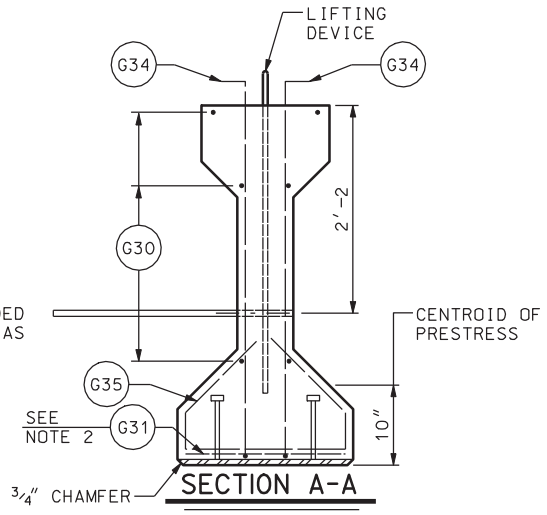


SECTION A-A

### AASHTO TYPE III BEAM

FINAL PRESTRESSING FORCES
AFTER LOSSES = 26.51 KIPS PER STRAND
f′ci = 4000 PSI
f′c = 6000 PSI
4 EXTERIOR BEAMS REQUIRED
4 INTERIOR BEAMS REQUIRED

MIN. AREA PRESTRESSING STEEL = 1.87 SQ. IN.

| NO. | DATE | BY | REMARKS |
|---|---|---|---|
| | | | |

REVISIONS

UTAH DEPARTMENT OF TRANSPORTATION
SALT LAKE CITY, UTAH
STRUCTURES DIVISION

URS

DESIGN PH 12/04 CHECK GTD 12/04
DRAWN DKH 12/04 CHECK PH 12/04
QUANT. CDT 12/04 CHECK CEL 12/04

APPROVAL RECOMM. DATE SENIOR DESIGN ENGR.
APPROVED FOR USE BY UDOT DATE UDOT BRIDGE ENGR.

I-15; CORRIDOR IN UTAH COUNTY
OREM CENTER STREET OVERPASS
GIRDER DETAILS-SPANS 1 & 3

PROJECT NUMBER SP-15-6(52)241

UTAH
COUNTY

F-15W2
DRG. NO.

SHT. 14 OF 27

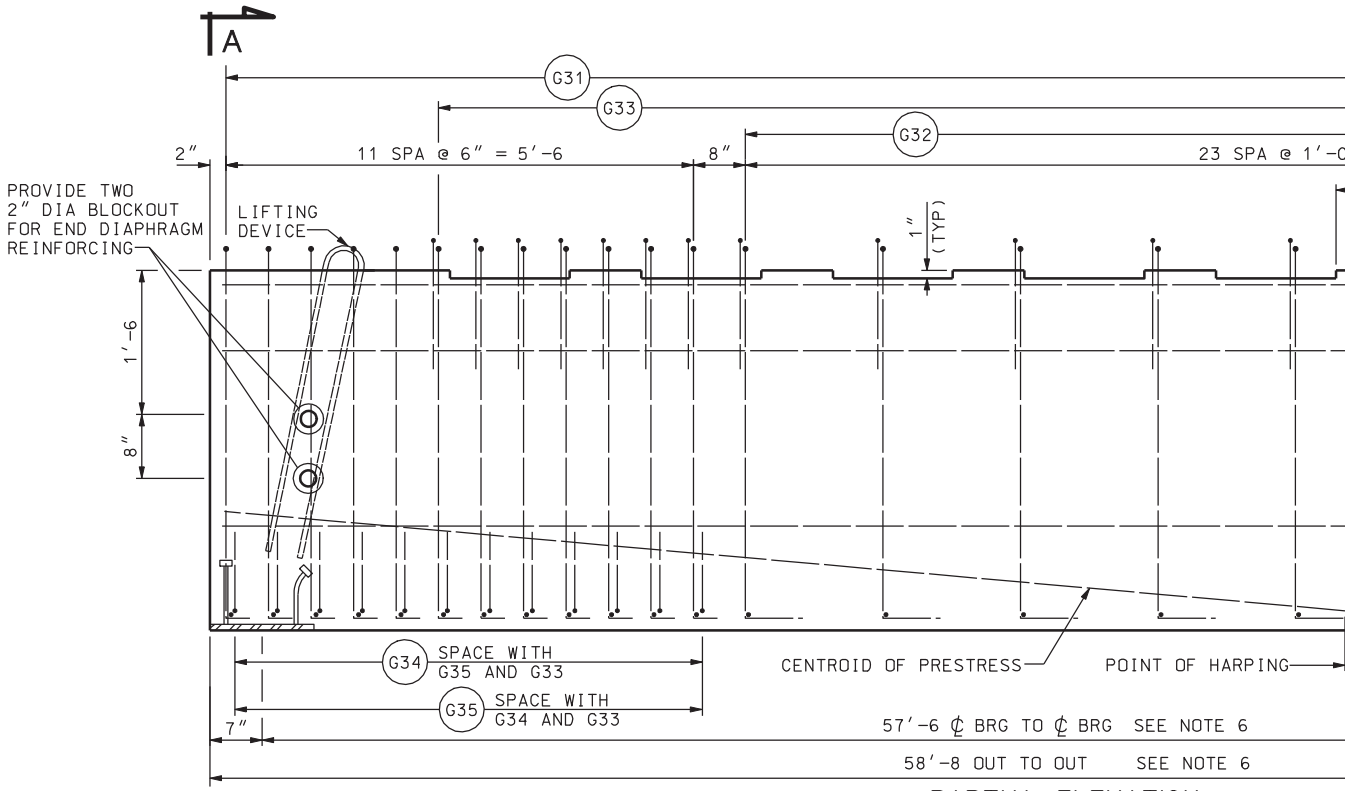


## PARTIAL ELEVATION

(SPAN 2; GIRDERS 1 - 4)

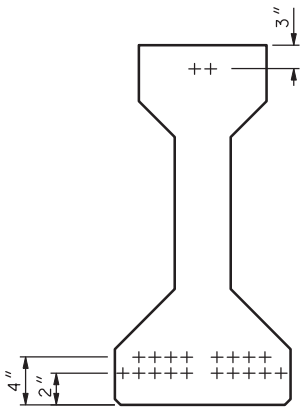


## STRAND PATTERN

(STRAND PATTERN AT ENDS)
NO. OF STRAIGHT STRANDS = 18
NO. OF DRAPED STRANDS = 2

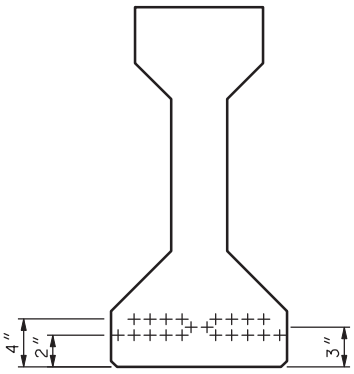


## STRAND PATTERN

(STRAND PATTERN AT CENTER)

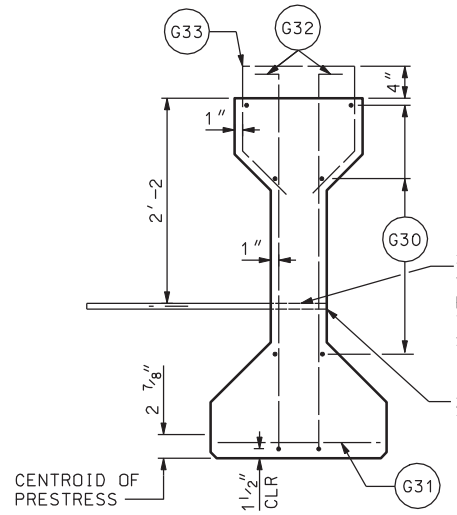


## SECTION B-B

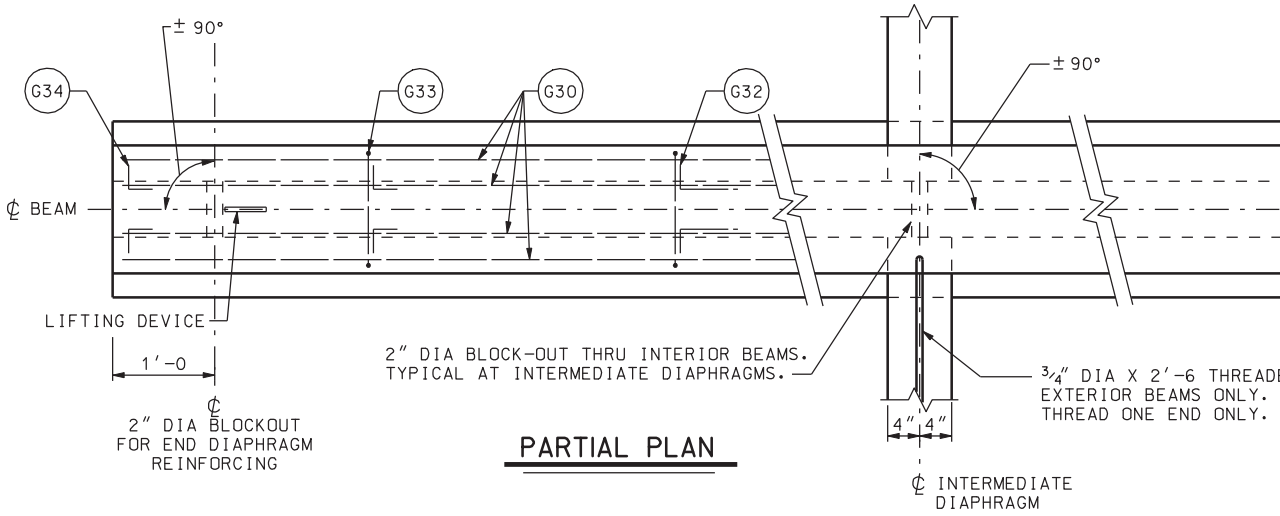


## PARTIAL PLAN

DGN File: IP_PWPcdms1717\4433_F15_15.dgn

02-MAY-2005

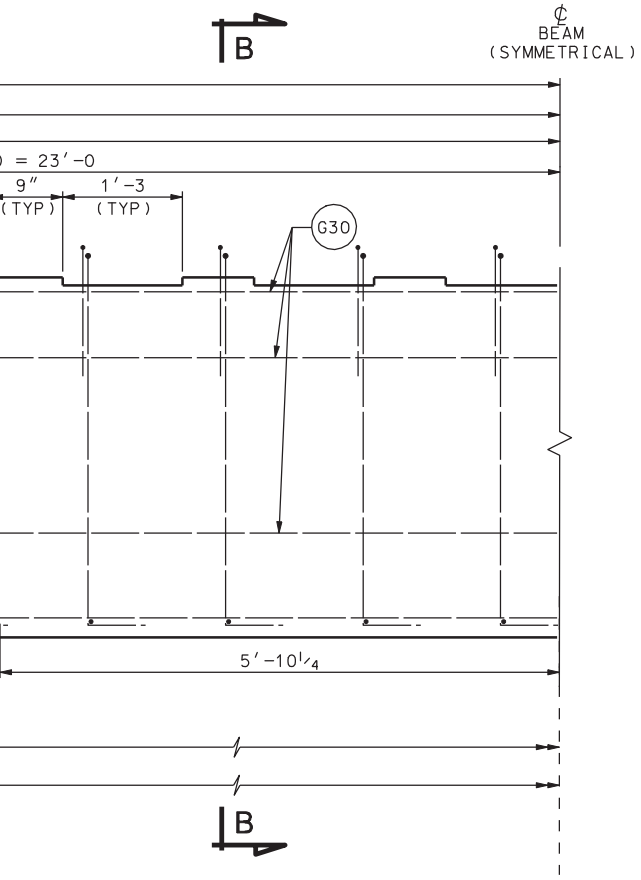


## REINFORCING STEEL SCHEDULE

| MARK | SIZE NO. | LENGTH | NO. REQ'D PER GIRDER | SKETCH |
|---|---|---|---|---|
| * G30 | 5 | 58′-4 | 6 | |
| G31 | 4 | 1′-6 | 71 | |
| G32 | 5 | 5′-1 | 94 | 3″, X, Y, 10″, Z, 4′-0 |
| G33 | 4 | 4′-4 | 61 | 10″, 9″, 1′-2, 1, 1 |
| G34 | 5 | 4′-6 | 48 | 3″, X, Y, 3″, Z, 4′-0 |
| G35 | 4 | 4′-8 | 24 | 5″, 7″, 7″, 1′-8, 1, 1 |

* LAP G30 BARS 3′-3″ MIN. AS NECESSARY

## NOTES

1. UNLESS OTHERWISE SHOWN, ALL DIMENSIONS ARE OUT TO OUT OF BARS.
2. PLACE BAR G31 IMMEDIATELY ABOVE LOWER ROW OF PRESTRESSING STRANDS.
3. USE ½″ DIAMETER SEVEN-WIRE STRESS RELIEVED PRESTRESSING STRANDS (GRADE 270).
4. SEE "DIAPHRAGM AND BEARING DETAILS" SHEET FOR BEARING PLATE DETAILS AND BEAM DETAILS AT BENT AND ABUTMENT.
5. USE COATED REINFORCING BARS CONFORMING TO AASHTO DESIGNATION M 284 OR M 111 AND M 31, GRADE 60.
6. FIELD VERIFY REQUIRED GIRDER LENGTH PRIOR TO GIRDER FABRICATION.

¾″ DIA X 2′-6 THREADED ROD WITH CONCRETE ANCHORS AT THE INTERIOR FACE OF THE EXTERIOR BEAMS ONLY. TYPICAL AT INTERMEDIATE DIAPHRAGMS. SEE FRAMING PLAN FOR LOCATIONS.

2″ DIA BLOCK-OUT THRU INTERIOR BEAMS. TYPICAL AT INTERMEDIATE DIAPHRAGMS.

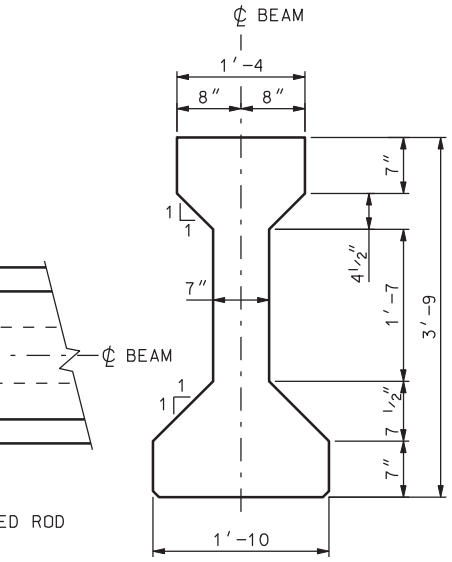


TYPICAL SECTION

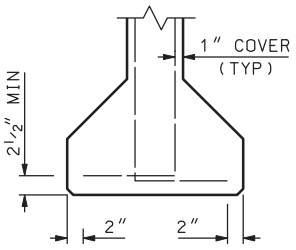


ALTERNATE BAR PLACEMENT

G31 BARS MAY BE ELIMINATED PROVIDED G32 BARS ARE MODIFIED AND PLACED AS SHOWN.

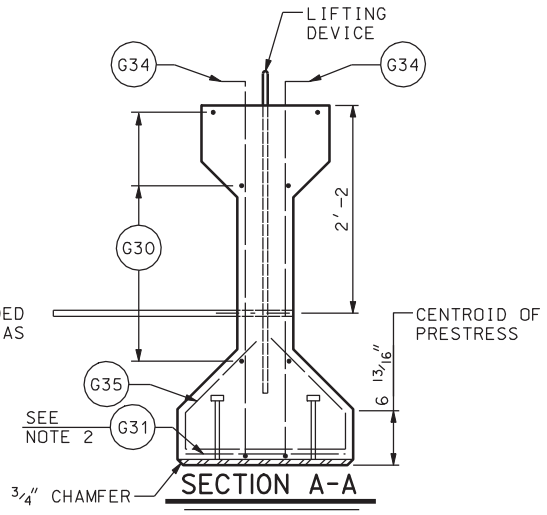


SECTION A-A

### AASHTO TYPE III BEAM

FINAL PRESTRESSING FORCES
AFTER LOSSES = 24.43 KIPS PER STRAND
f′ci = 4000 PSI
f′c = 6000 PSI
2 EXTERIOR BEAMS REQUIRED
2 INTERIOR BEAMS REQUIRED

MIN. AREA PRESTRESSING STEEL = 1.87 SQ. IN.

| NO. | DATE | BY | REMARKS |
|---|---|---|---|

REVISIONS

UTAH DEPARTMENT OF TRANSPORTATION
SALT LAKE CITY, UTAH
STRUCTURES DIVISION

URS

DESIGN PH 12/04 CHECK GTD 12/04
DRAWN DKH 12/04 CHECK PH 12/04
QUANT. CDT 12/04 CHECK CEL 12/04

APPROVAL RECOMM. DATE SENIOR DESIGN ENGR.
APPROVED FOR USE BY UDOT DATE UDOT BRIDGE ENGR.

I-15; CORRIDOR IN UTAH COUNTY
OREM CENTER STREET OVERPASS
GIRDER DETAILS-SPAN 2

PROJECT NUMBER SP-15-6(52)241

UTAH
COUNTY

F-15W2
DRG. NO.

SHT. 15 OF 27

## CONCRETE QUANTITIES

| | |
|---|---|
| INTERMEDIATE DIAPHRAGMS | 7.3 CU YD |

## NOTES

1. USE 1″ DIA HIGH TENSILE ANCHOR OR APPROVED EQUIVALENT.
2. PLACE BEARING PLATES AND PADS PERPENDICULAR TO GIRDER CENTER LINE.
3. SPACING OF REINFORCING STEEL MAY BE (±) USE THE NUMBER OF BARS SHOWN.

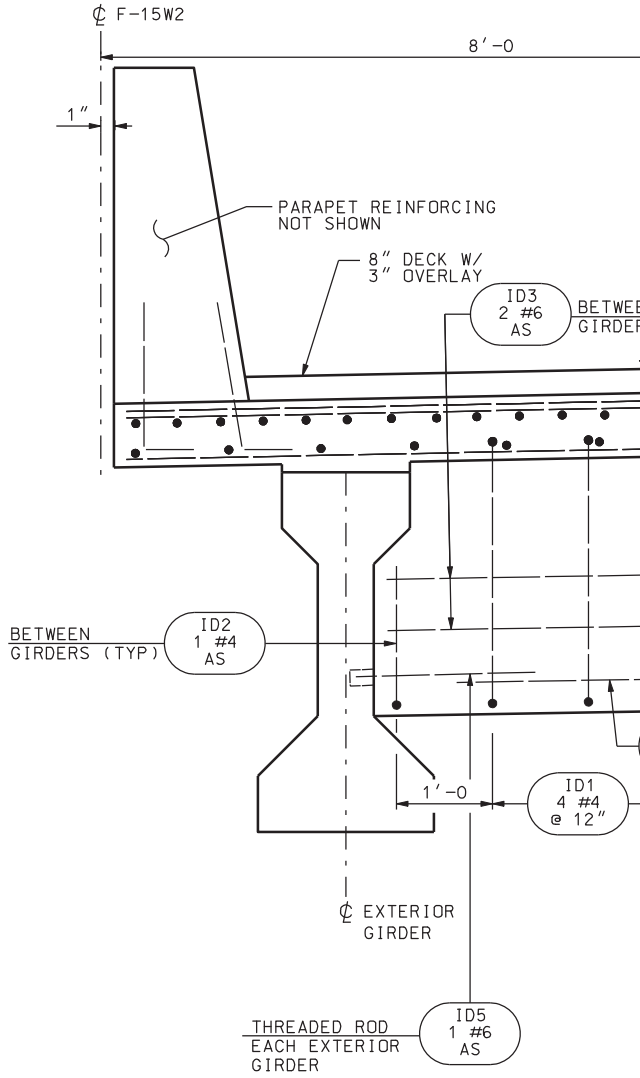


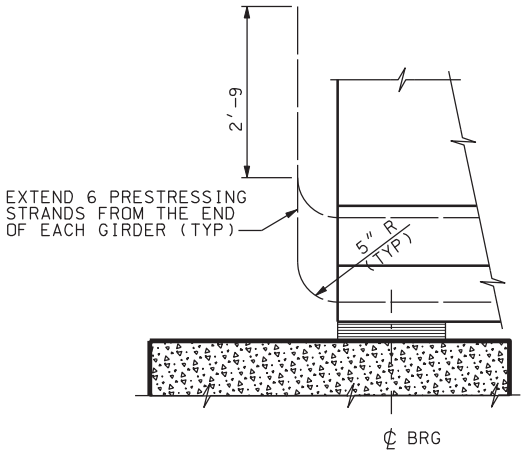


## GIRDER DETAILS AT ABUTMENT

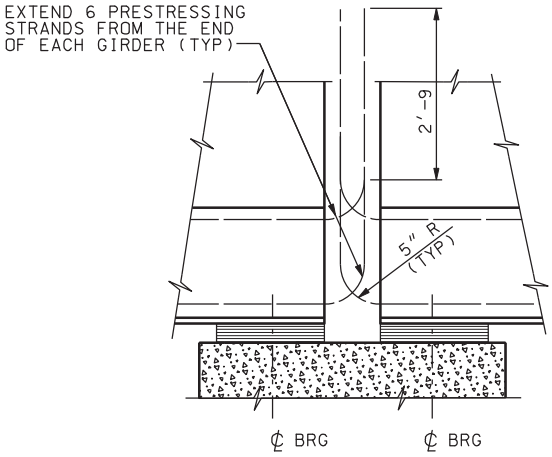


## GIRDER DETAILS AT BENT

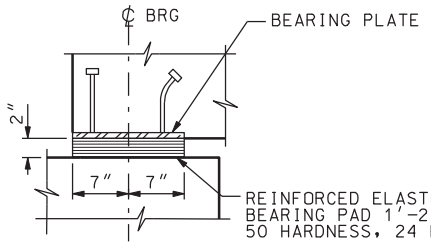


## BEARING DETAIL

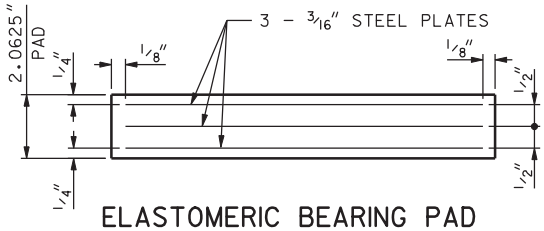


## ELASTOMERIC BEARING PAD

DGN File:IP_PWPcdns1717\4433_F15_16.dgn
02-MAY-2005

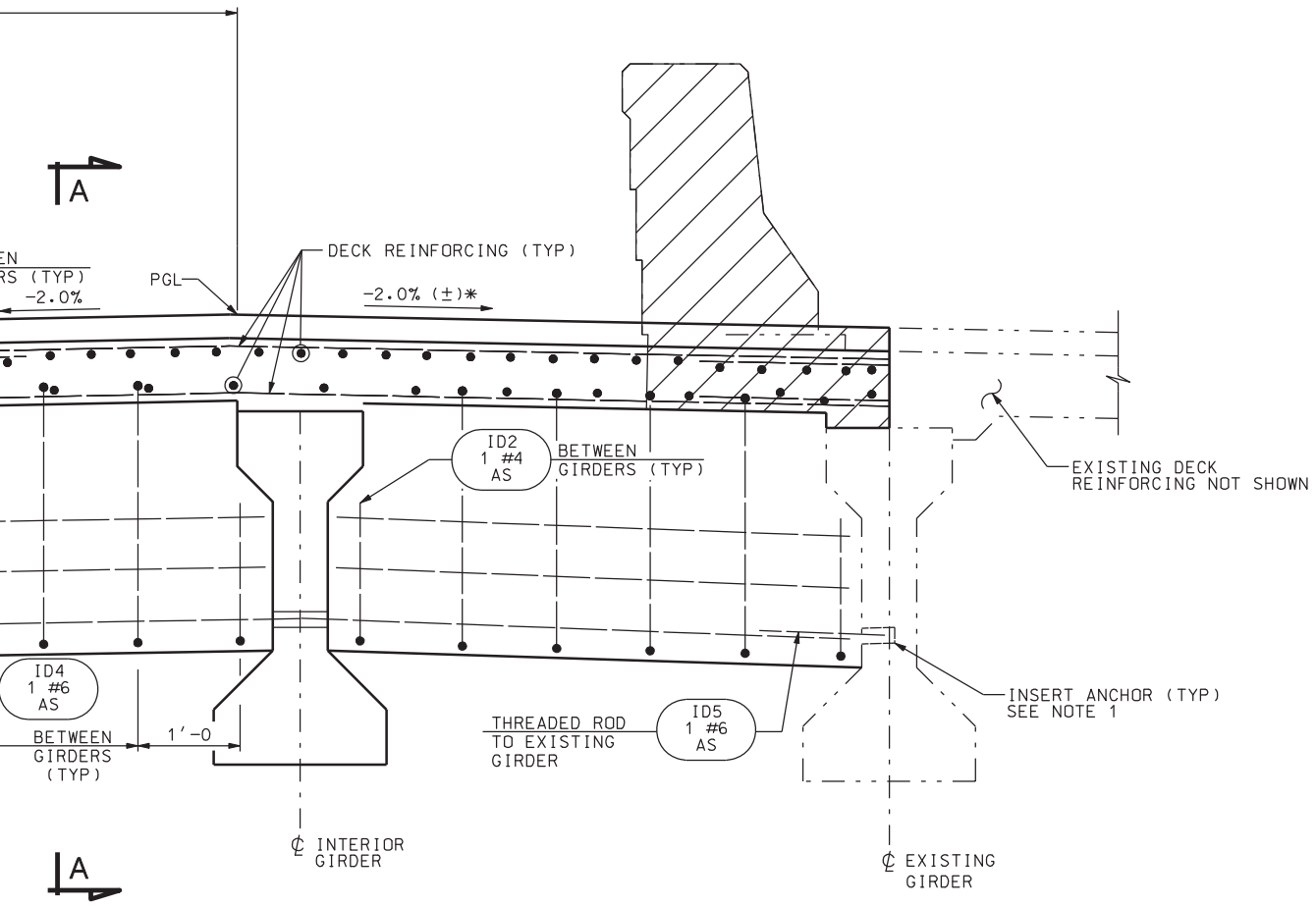


## INTERMEDIATE DIAPHRAGM DETAIL

(TYPICAL REINFORCING BETWEEN GIRDERS)
* MATCH EXISTING CROSS SLOPE

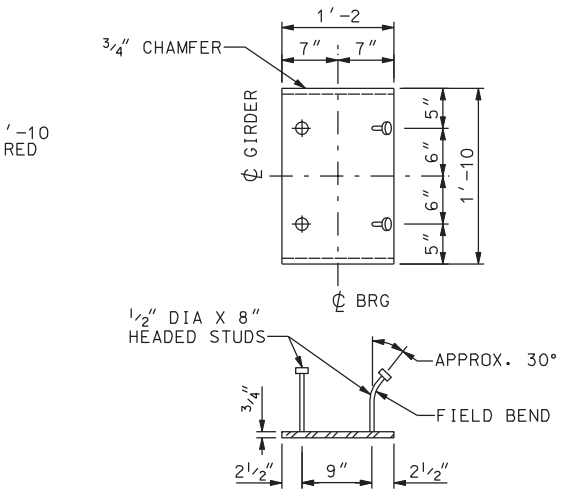


## BEARING PLATE DETAIL

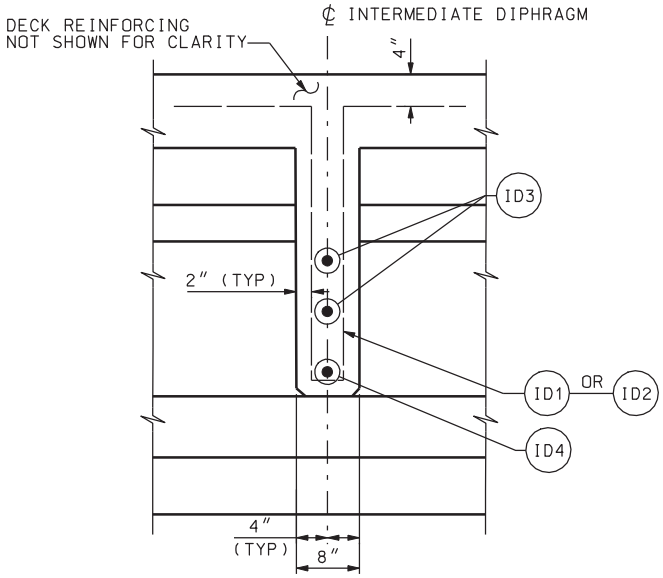


## SECTION A-A

| NO. | DATE | BY | REMARKS |
|---|---|---|---|
| | | | |

REVISIONS

UTAH DEPARTMENT OF TRANSPORTATION
SALT LAKE CITY, UTAH
STRUCTURES DIVISION

URS

DESIGN PH 12/04 CHECK GTD 12/04
DRAWN DKH 12/04 CHECK PH 12/04
QUANT. CDT 12/04 CHECK CEL 12/04

APPROVAL RECOMM. DATE SENIOR DESIGN ENGR.
APPROVED FOR USE BY UDOT DATE UDOT BRIDGE ENGR.

I-15; CORRIDOR IN UTAH COUNTY
OREM CENTER STREET OVERPASS
DIAPHRAGM & BEARING DETAILS

PROJECT NUMBER SP-15-6(52)241

UTAH
COUNTY

F-15W2
DRG. NO.

SHT. 16 OF 27

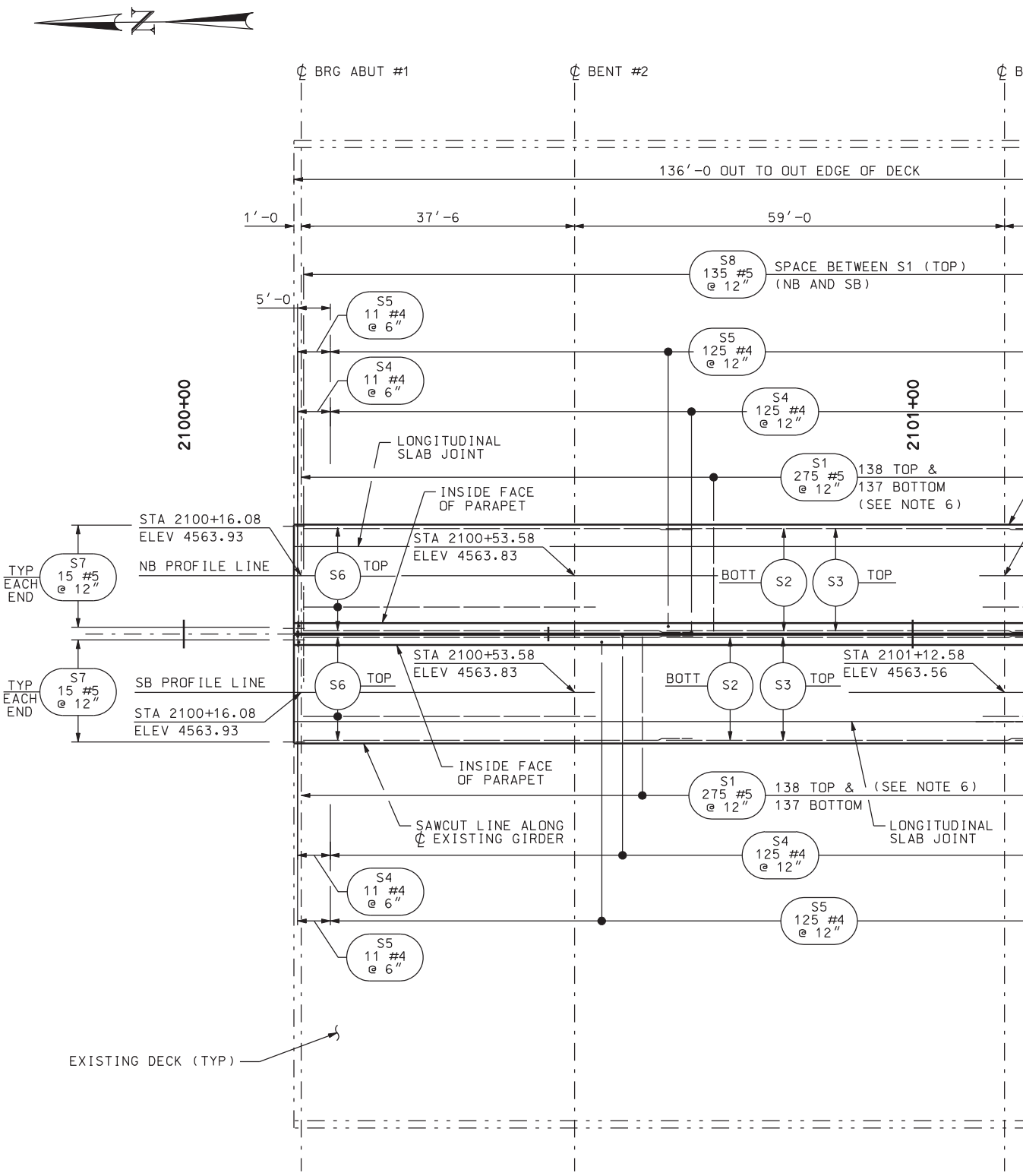


## DECK PLAN

DGN File:IP_PWPcdns1717\4433_F15_17.dgn

02-MAY-2005

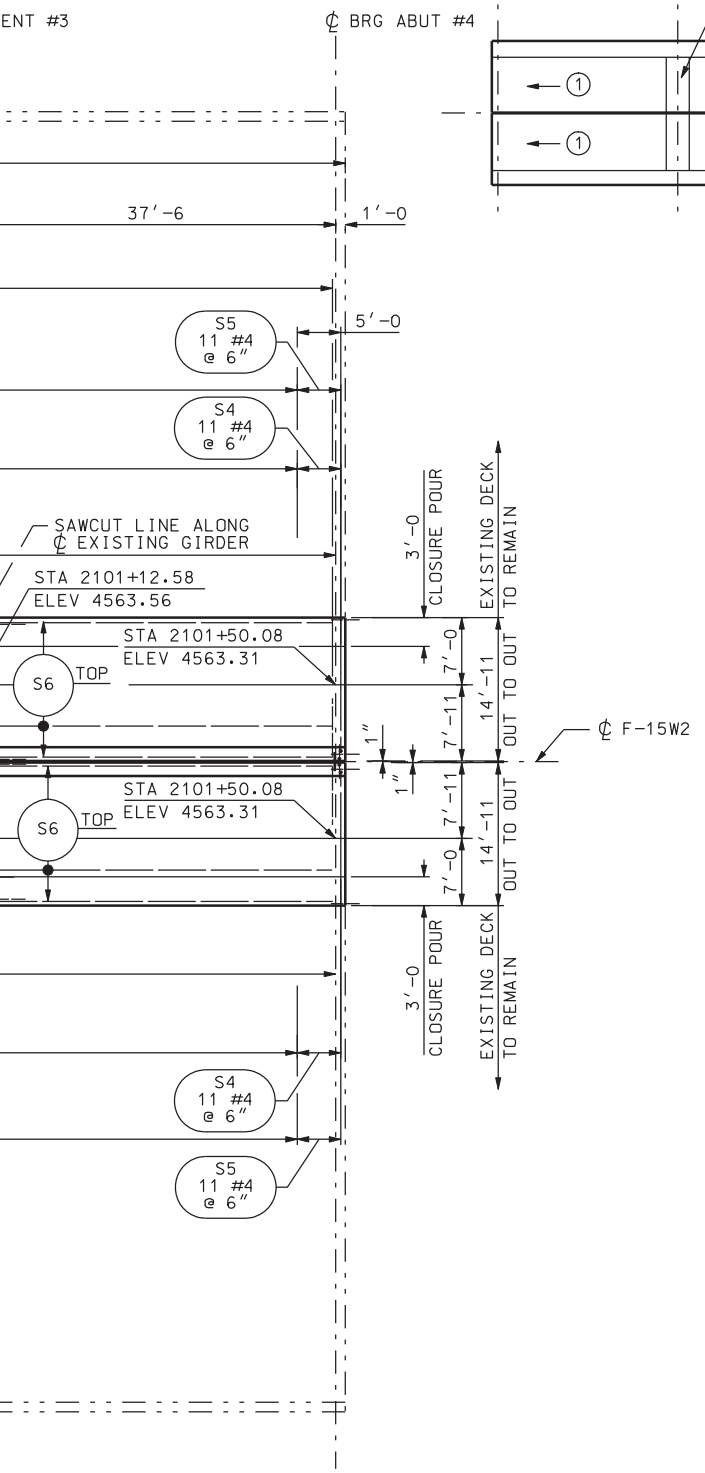


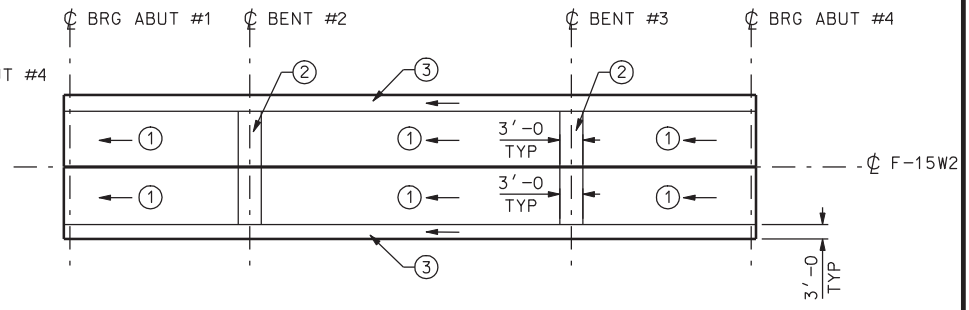


## POUR SEQUENCE

(3) SEQUENCE NUMBER

NOTE: PLACE DECK IN SECTIONS AND SEQUENCE AS INDICATED. POUR IN THE DIRECTION INDICATED. POURS (1) AND (2) CAN BE COMBINED WITH APPROVAL. CONTRACTOR MAY SUBMIT ALTERNATE PROCEDURES FOR APPROVAL.

## CONCRETE QUANTITIES

| | |
|---|---|
| DECK NB & SB | 102.4 CU YD |

## NOTES

1. REMOVE EXISTING MEDIAN PARAPET AND DECK SLAB TO PREPARE BRIDGE FOR WIDENING. CLEAN AND INCORPORATE EXISTING TRANSVERSE REINFORCING BARS INTO NEW CONSTRUCTION.
2. USE A MINIMUM LAP SPLICE OF 3′-1′ FOR S2 LONGITUDINAL BARS, AND 2′-7″ FOR S3 LONGITUDINAL BARS.
3. SEE "APPROACH SLAB PLAN" FOR APPROACH SLAB DETAILS.
4. SEE "PARAPET DETAILS" FOR PARAPET REINFORCEMENT.
5. SPACING OF REINFORCING STEEL MAY BE (±). USE NUMBER OF BARS SHOWN.
6. STAGGER TOP S1 BARS WITH BOTTOM S1 BARS. PLACE ONE S1 BAR ON TOP AT EACH END.
7. STAY-IN-PLACE FORMS ARE NOT PERMITTED.

| NO. | DATE | BY | REMARKS |
|---|---|---|---|

REVISIONS

UTAH DEPARTMENT OF TRANSPORTATION
SALT LAKE CITY, UTAH
STRUCTURES DIVISION

URS

DESIGN PH 12/04 CHECK GTD 12/04
DRAWN DKH 12/04 CHECK PH 12/04
QUANT. CDT 12/04 CHECK CEL 12/04

APPROVAL RECOMM. DATE SENIOR DESIGN ENGR.
APPROVED FOR USE BY UDOT DATE UDOT BRIDGE ENGR.

I-15; CORRIDOR IN UTAH COUNTY
OREM CENTER STREET OVERPASS
DECK PLAN

PROJECT NUMBER SP-15-6(52)241

UTAH
COUNTY

F-15W2
DRG. NO.

SHT. 17 OF 27

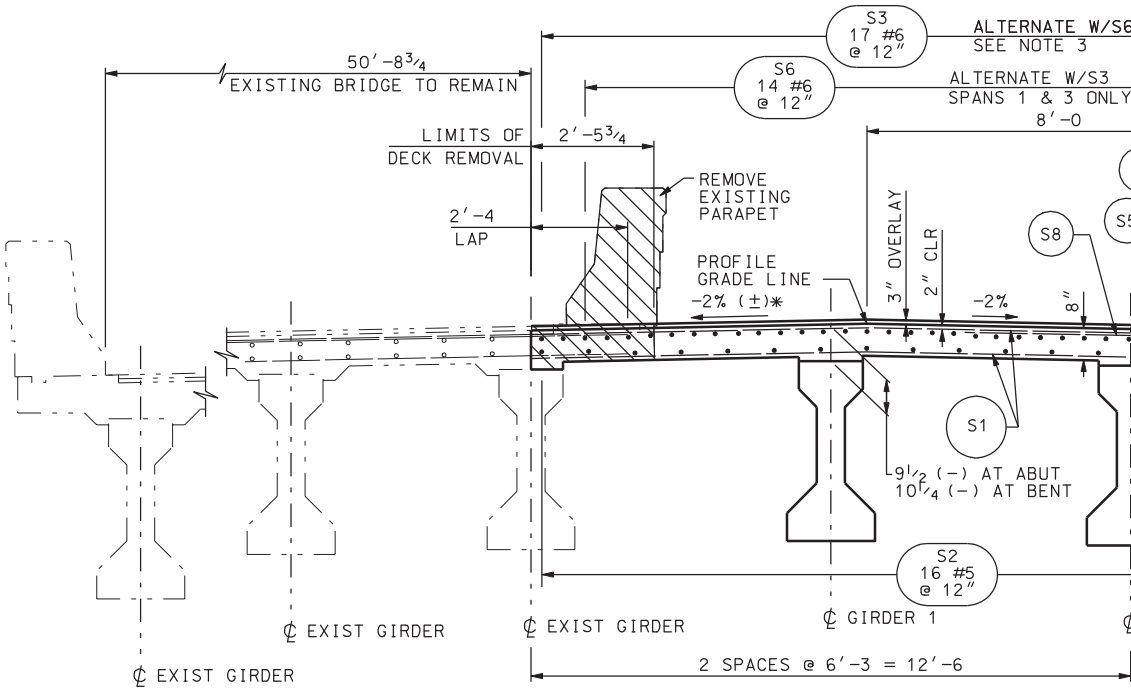


## NORTHBOUND DECK SECTION

LOOKING UPSTATION
* MATCH EXISTING CROSS SLOPE

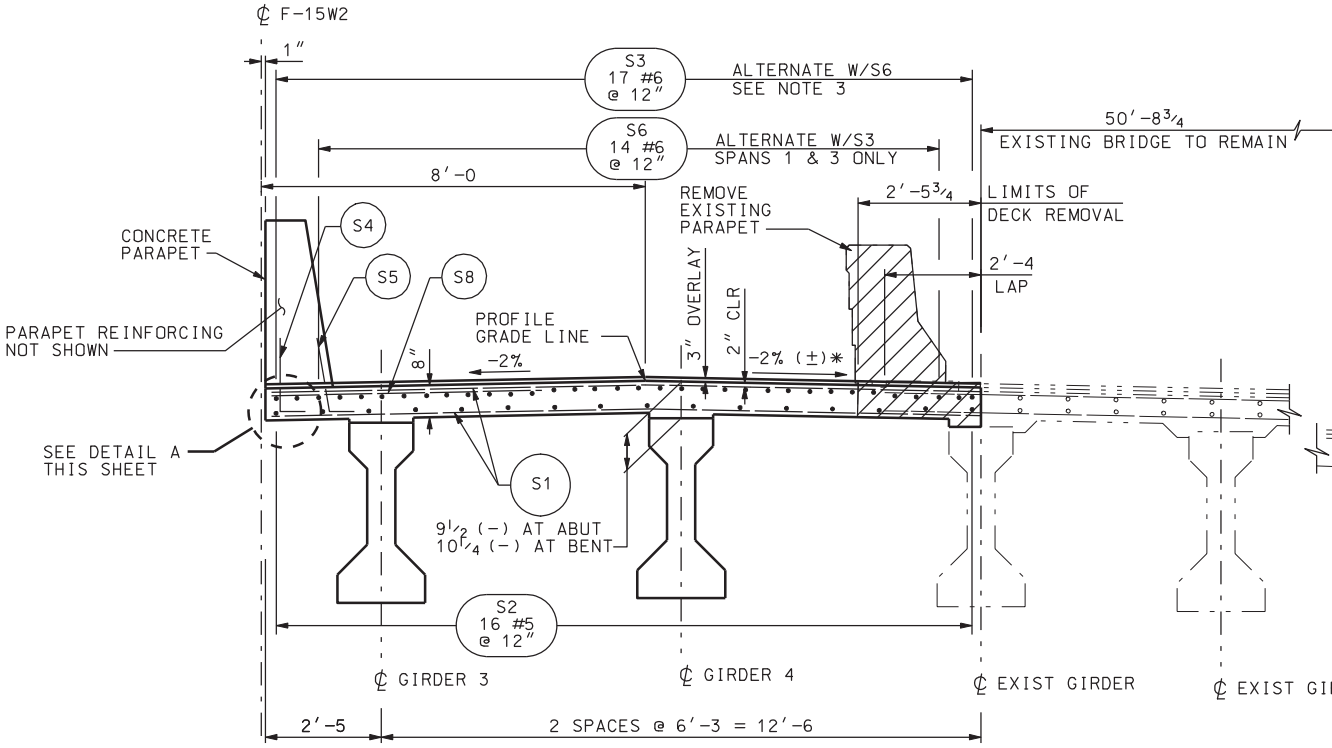


## SOUTHBOUND DECK SECTION

LOOKING UPSTATION
* MATCH EXISTING CROSS SLOPE

DGN File:IP_PWPcdns1717\4433_F15_18.dgn
02-MAY-2005

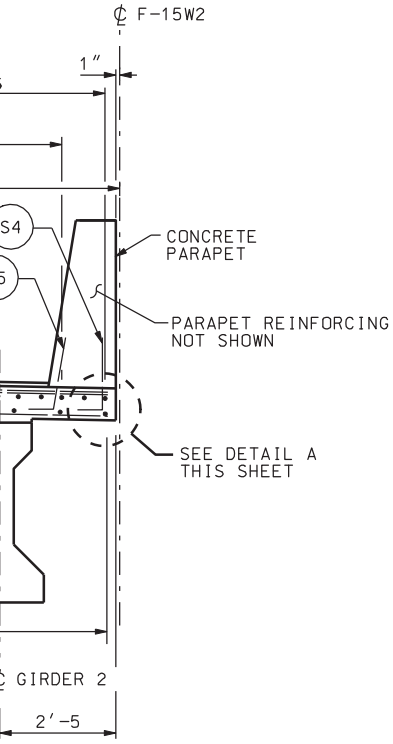


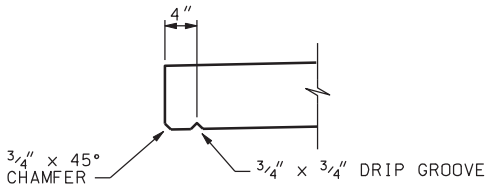


## DETAIL A

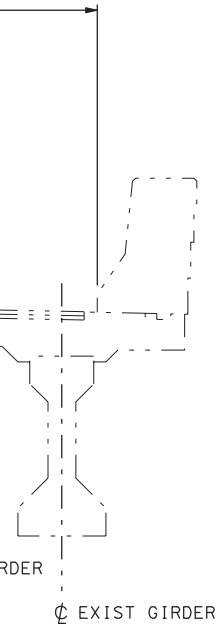


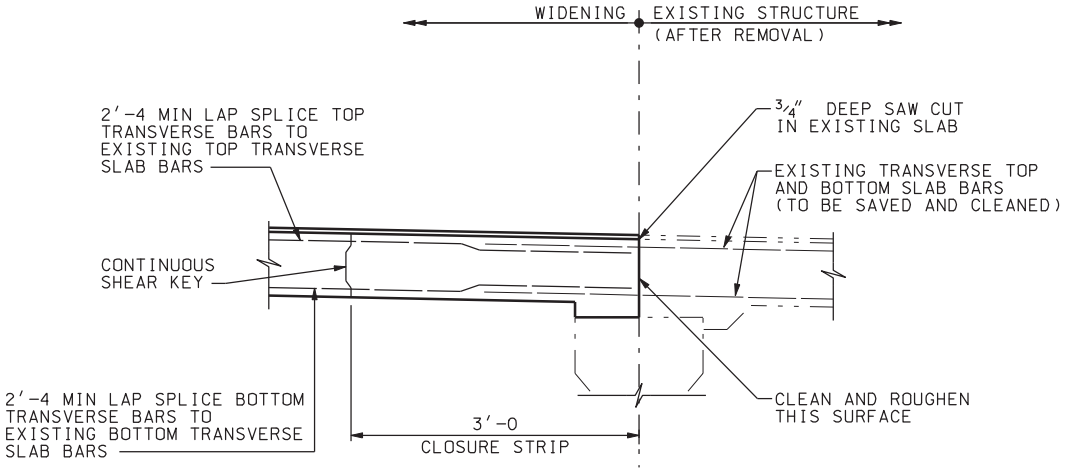


## SLAB CLOSURE

## NOTES

1. DECK AND INSIDE PARAPET REMOVAL INCLUDED IN BID PRICE FOR PREPARE BRIDGE FOR WIDENING.
2. SEE "PARAPET DETAILS" SHEET FOR DESIGN OF CONCRETE PARAPET.
3. STAGGER TOP S3 BAR WITH BOTTOM S2 BAR. PLACE ONE S3 BAR AT EACH END.
4. SEE REHABILITATION PLANS M-91 FOR OVERLAY DETAILS ON EXISTING BRIDGE DECK SECTION.
5. CLEAN AND INCORPORATE EXISTING REINFORCING BARS INTO NEW CONSTRUCTION.
6. SPACING OF REINFORCING MAY BE (±). USE NUMBER OF BARS SHOWN.

| NO. | DATE | BY | REMARKS |
|---|---|---|---|

REVISIONS

UTAH DEPARTMENT OF TRANSPORTATION
SALT LAKE CITY, UTAH
STRUCTURES DIVISION

URS

DESIGN PH 12/04 CHECK GTD 12/04
DRAWN DKH 12/04 CHECK PH 12/04
QUANT. CDT 12/04 CHECK CEL 12/04

APPROVAL RECOMM. DATE SENIOR DESIGN ENGR.
APPROVED FOR USE BY UDOT DATE UDOT BRIDGE ENGR.

I-15; CORRIDOR IN UTAH COUNTY
OREM CENTER STREET OVERPASS
DECK SECTIONS
PROJECT NUMBER SP-15-6(52)241

UTAH
COUNTY

F-15W2
DRG. NO.

SHT. 18 OF 27

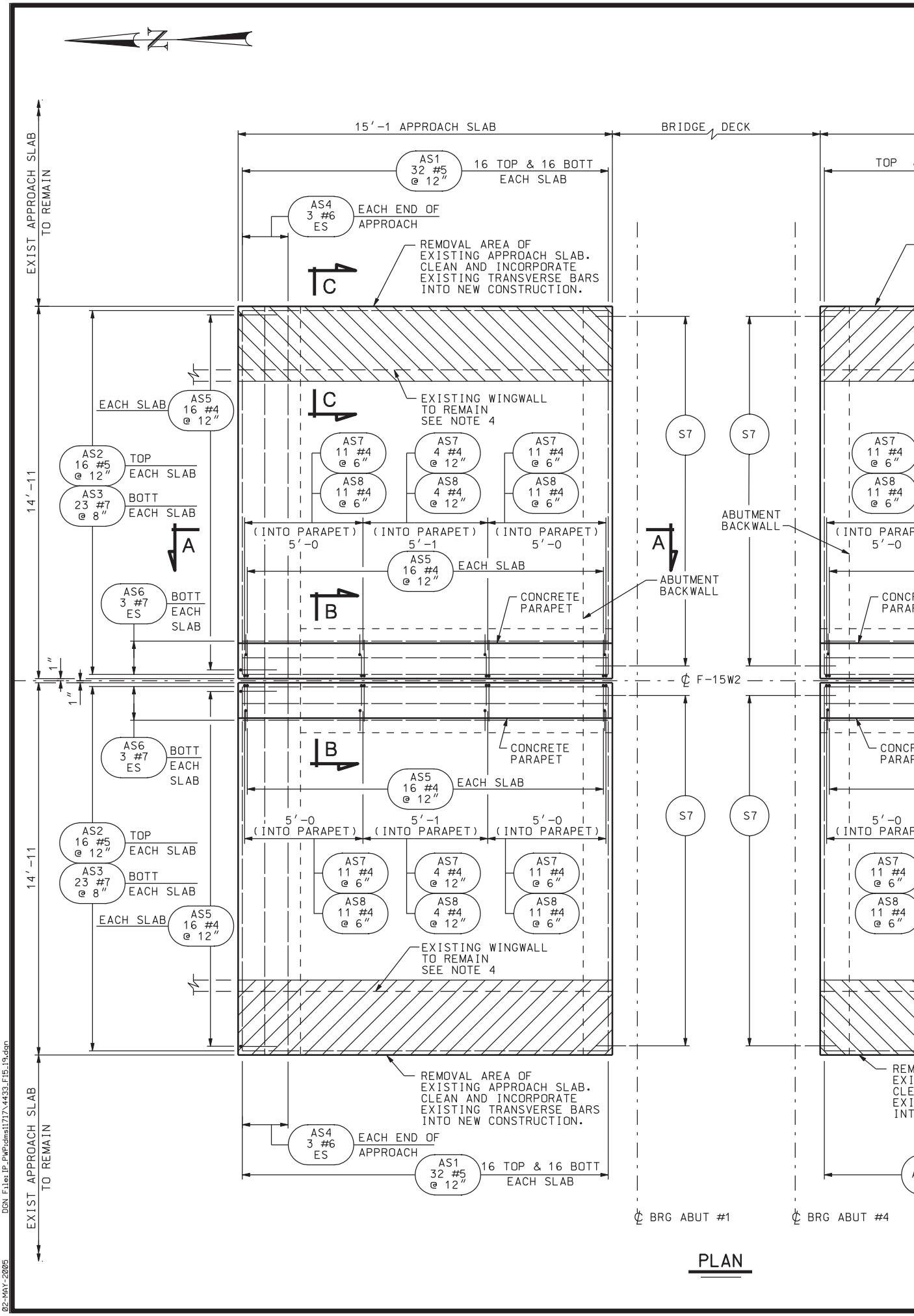


PLAN

DGN File: IP_PWPcdms1717\4433_F15_19.dgn

02-MAY-2005

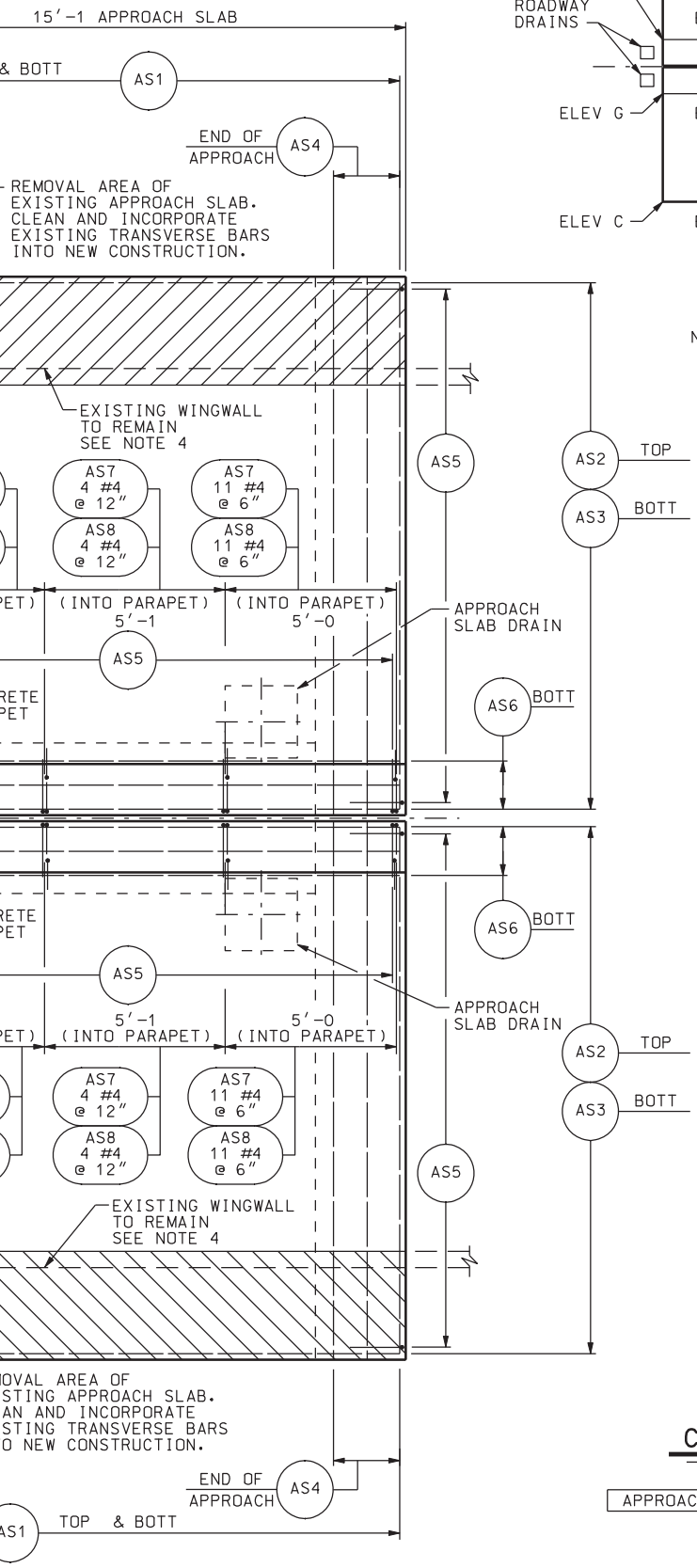


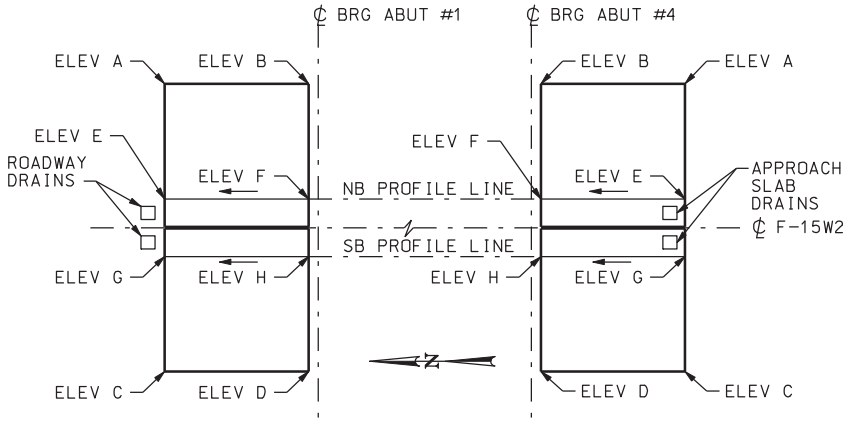


## KEY PLAN

NOTES: 1. PLACE APPROACH SLAB DIRECTION AS INDICATED. CONTRACTOR MAY SUBMIT ALTERNATE PROCEDURES FOR APPROVAL.

2. FOR ELEVATIONS RELATING TO LETTERS SHOWN SEE "SCREED ELEVATIONS" SHEET.

## NOTES

1. FOR SECTIONS A-A, B-B AND C-C, SEE "APPROACH SLAB DETAILS".
2. SEE "APPROACH SLAB DRAIN DETAILS" FOR DRAIN DETAILS.
3. REMOVE EXISTING APPROACH SLAB TO PREPARE BRIDGE FOR WIDENING. CLEAN EXISTING APPROACH SLAB TRANSVERSE REINFORCING TO BE USED IN NEW CONSTRUCTION.
4. REMOVE TOP OF WINGWALL APPROXIMATELY 1'-6 TO PLACE 6" MIN OF RIGID PLASTIC FOAM BETWEEN TOP OF WINGWALL AND BOTTOM OF APPROACH SLAB.
5. SPACING OF REINFORCING MAY BE (±) USE NUMBER OF BARS SHOWN.
6. ADJUST APPROACH SLAB ELEVATIONS TO MATCH EXISTING APPROACH AND ROADWAY ELEVATIONS. IF UNDERMINING FOUND DURING CONSTRUCTION, FILL VOID IN FIELD.

## CONCRETE QUANTITIES

| | |
|---|---|
| APPROACH SLAB NB & SB | 38.2 CU YDS |

| NO. | DATE | BY | REMARKS |
|---|---|---|---|
| | | | |

REVISIONS

UTAH DEPARTMENT OF TRANSPORTATION
SALT LAKE CITY, UTAH
STRUCTURES DIVISION

URS

DESIGN PH 12/04 CHECK GTD 12/04
DRAWN DKH 12/04 CHECK PH 12/04
QUANT. CDT 12/04 CHECK CEL 12/04

APPROVAL RECOMM. DATE SENIOR DESIGN ENGR.
APPROVED FOR USE BY UDOT DATE UDOT BRIDGE ENGR.

I-15; CORRIDOR IN UTAH COUNTY
OREM CENTER STREET OVERPASS
APPROACH SLAB PLAN

PROJECT NUMBER SP-15-6(52)241

UTAH
COUNTY

F-15W2
DRG. NO.

SHT. 19 OF 27

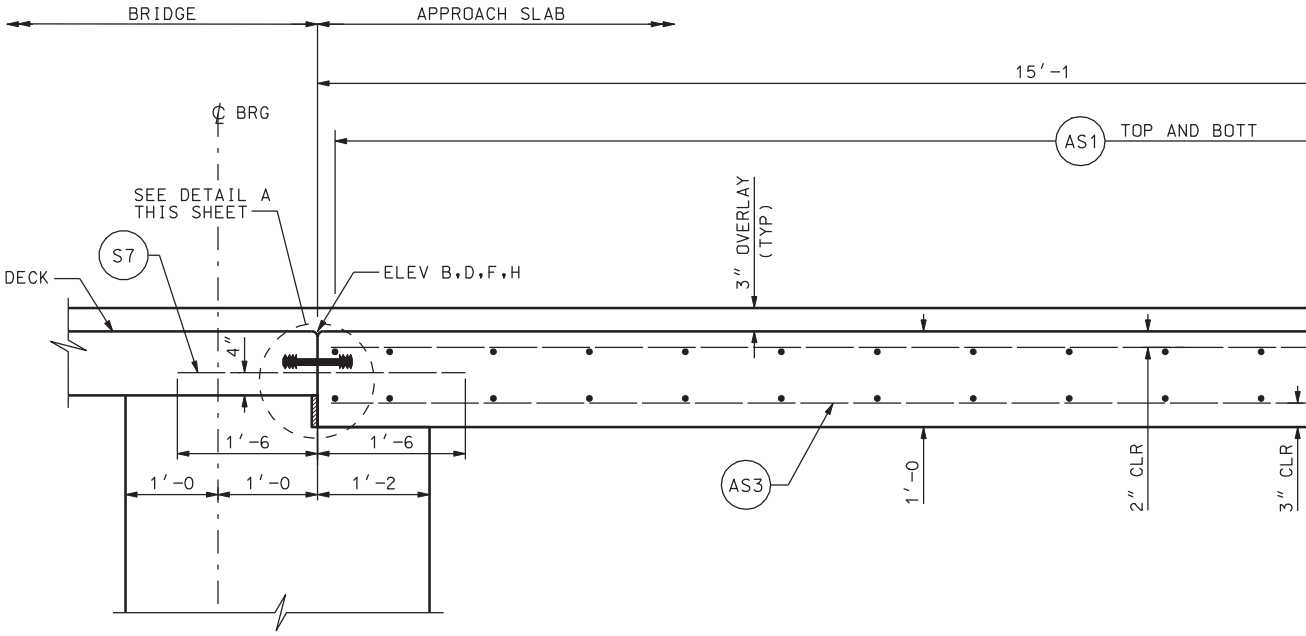


SECTION A-A

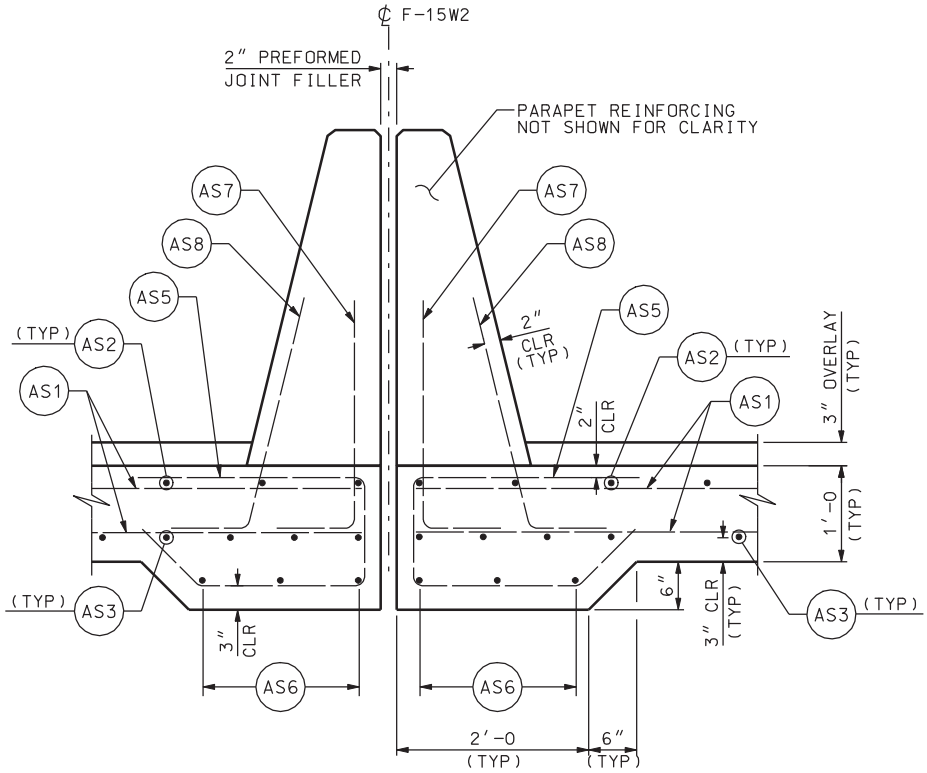


SECTION B-B

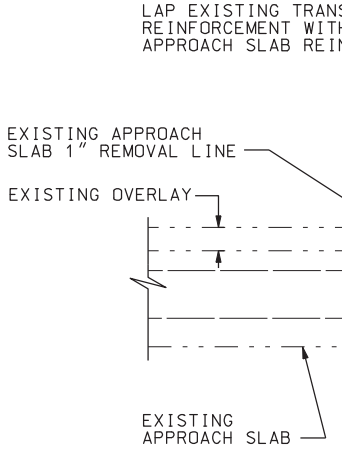


NOTE: 1. SEE "PREP
2. LONGITUDI

DGN File:IP_PWPcdns1717\4433_F15_20.dgn

02-MAY-2005

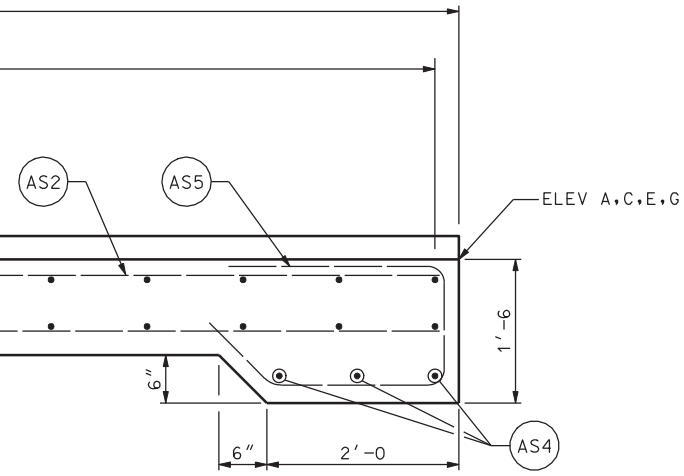


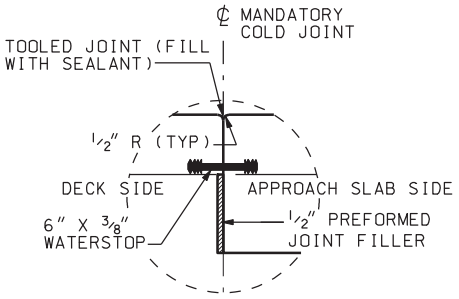


DETAIL A

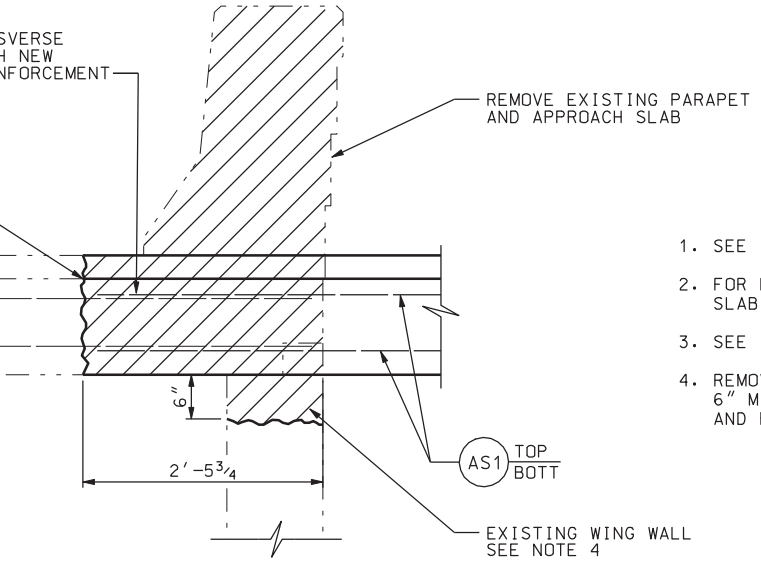


ARE BRIDGE FOR WIDENING" SPECIFICATION.
NAL REINFORCING NOT SHOWN FOR CLARITY.

SECTION C-C

## NOTES

1. SEE "PARAPET DETAILS" SHEET FOR PARAPET REINFORCEMENT.
2. FOR LOCATION OF SECTIONS A-A, B-B AND C-C, SEE "APPROACH SLAB PLAN".
3. SEE "SCREED ELEVATIONS" FOR ELEVATIONS.
4. REMOVE TOP OF WINGWALL APPROXIMATELY 1'-6. PLACE 6" MIN OF RIGID PLASTIC FOAM BETWEEN TOP OF WINGWALL AND BOTTOM OF APPROACH SLAB.

| NO. | DATE | BY | REMARKS |
|---|---|---|---|
| | | | |

REVISIONS

UTAH DEPARTMENT OF TRANSPORTATION
SALT LAKE CITY, UTAH
STRUCTURES DIVISION

URS

DESIGN PH 12/04 CHECK GTD 12/04
DRAWN DKH 12/04 CHECK PH 12/04
QUANT. CDT 12/04 CHECK CEL 12/04

APPROVAL RECOMM. DATE SENIOR DESIGN ENGR.
APPROVED FOR USE BY UDOT DATE UDOT BRIDGE ENGR.

I-15; CORRIDOR IN UTAH COUNTY
OREM CENTER STREET OVERPASS
APPROACH SLAB DETAILS

PROJECT NUMBER SP-15-6(52)241

UTAH
COUNTY

F-15W2
DRG. NO.

SHT. 20 OF 27

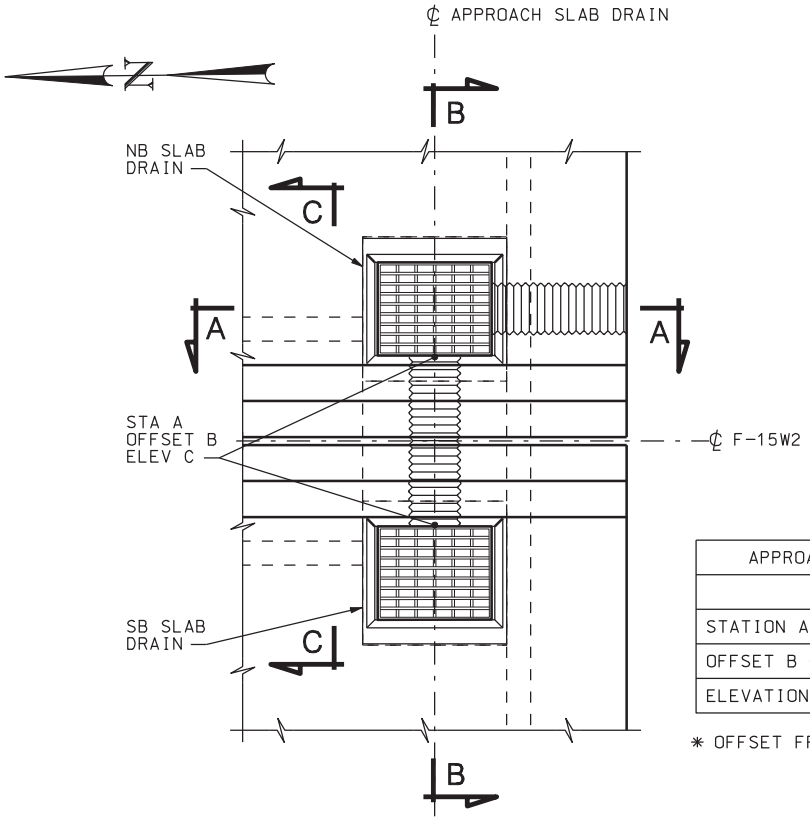


| APPROACH SLAB DRAIN LOCATIONS | | |
|---|---|---|
| | NB DRAIN | SB DRAIN |
| STATION A | 2101+62.17 | 2101+62.17 |
| OFFSET B ✳ | 1.67 LT | 1.67 RT |
| ELEVATION C | 4563.30 | 4563.30 |

✳ OFFSET FROM ℄ F-15W2

## TYPICAL PLAN

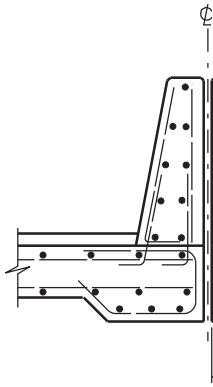

## SECTIO

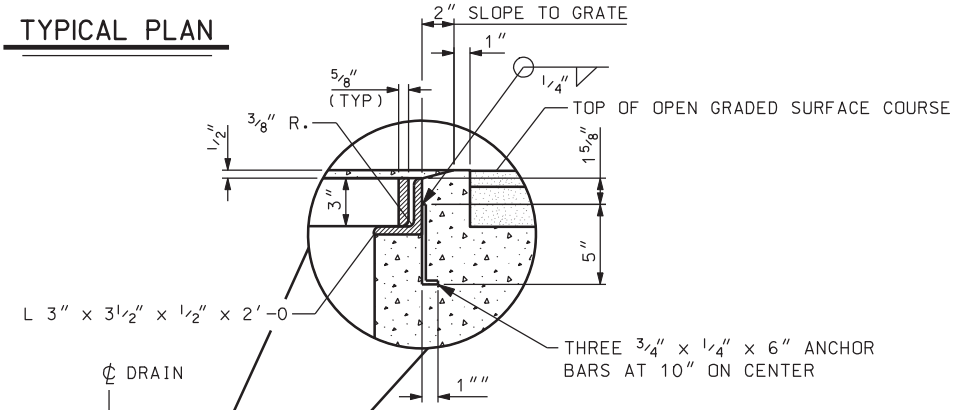


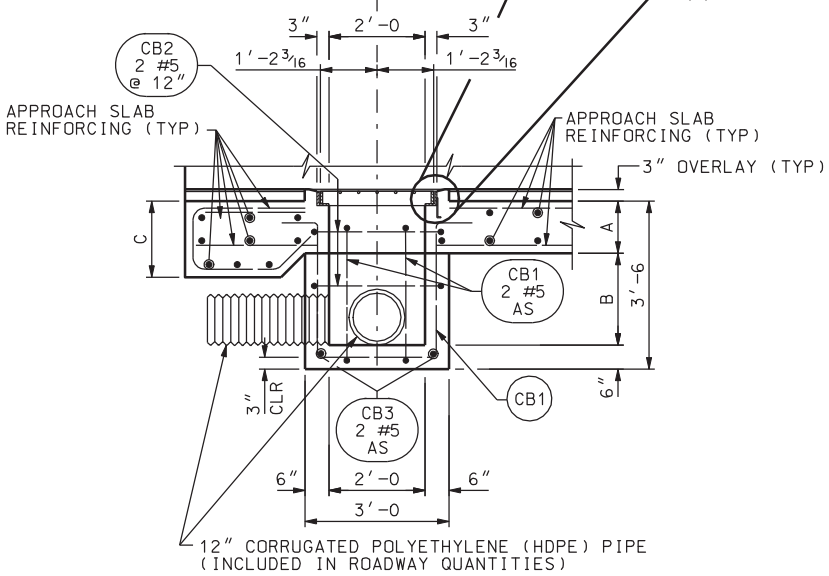


## SECTION A-A

| LOCATION | A | B | C |
|---|---|---|---|
| APPROACH SLAB DRAIN | 1′-0 | 2′-0 | 1′-6 |

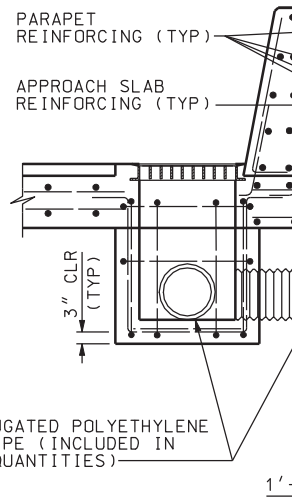


## SECT

BOTH SIDES IDENTICAL.
CALLOUTS SHOWN ON C

DGN File:IP_PWPcdns1717\4433_F15_21.dgn

02-MAY-2005

F-15W2

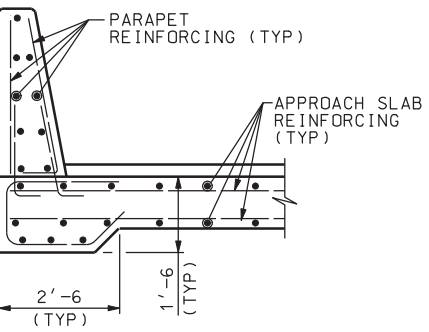


ON C-C

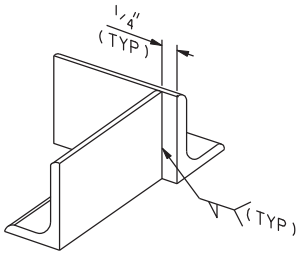


DETAIL D

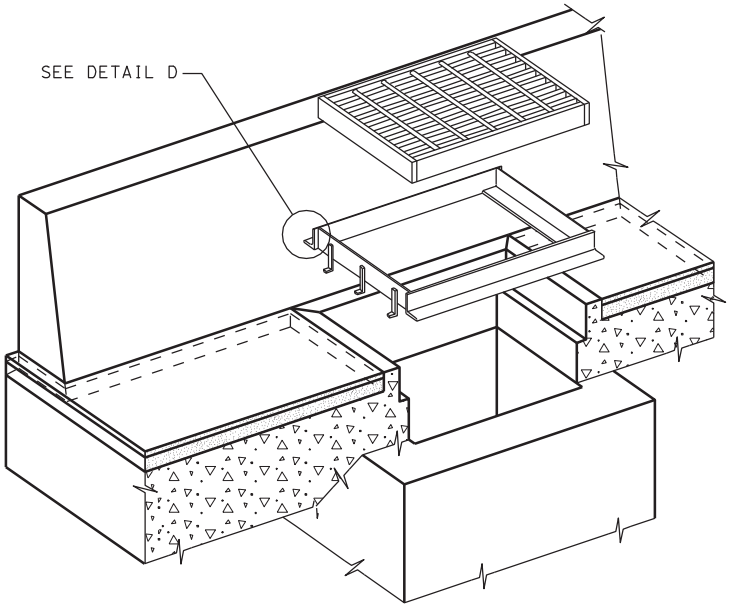


ISOMETRIC

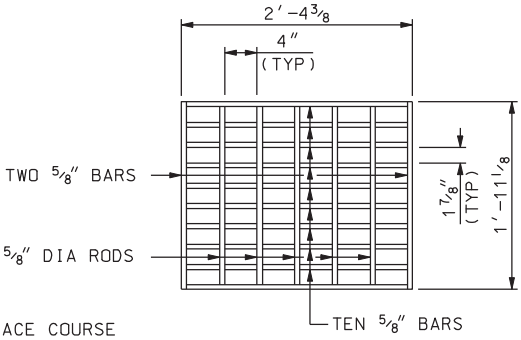


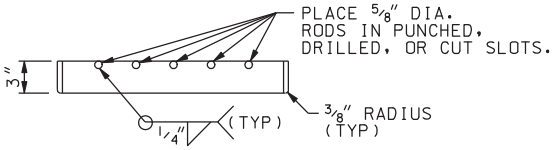


GRATE DETAIL

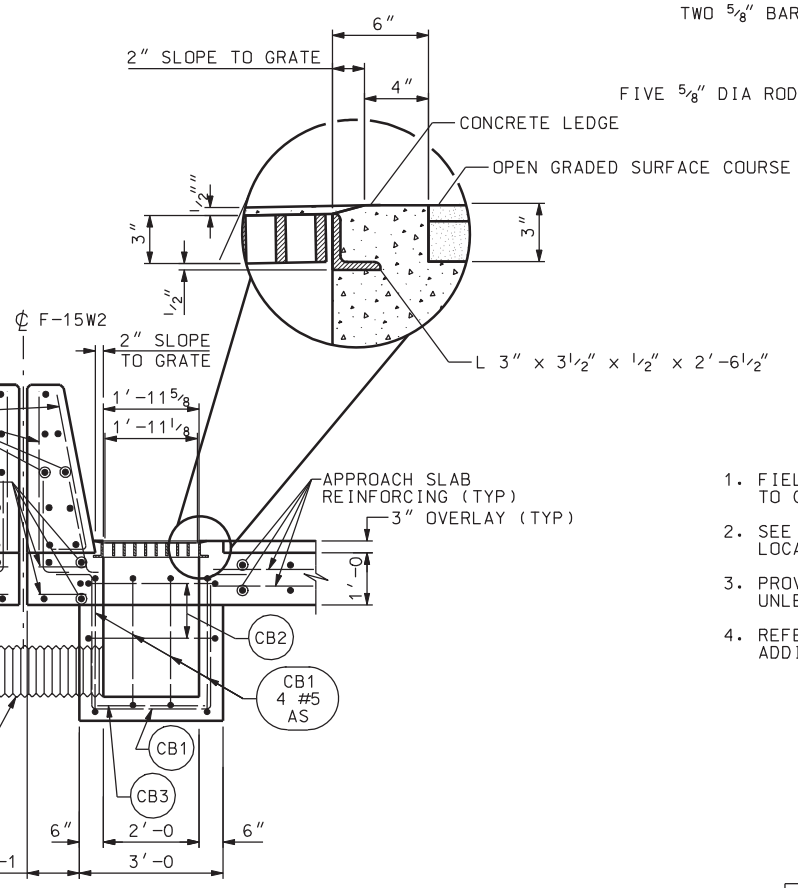


TION B-B

DIMENSIONS AND REINFORCING
ONE SIDE ONLY FOR CLARITY.

1. FIELD CUT OR BEND APPROACH SLAB REINFORCING TO CLEAR APPROACH SLAB DRAINS.
2. SEE "APPROACH SLAB PLAN" SHEET FOR ACTUAL LOCATIONS OF DRAINS.
3. PROVIDE 2" MIN COVER TO REINFORCING STEEL UNLESS NOTED OTHERWISE.
4. REFER TO ROADWAY DETAILS SHEET DT-15 FOR ADDITIONAL DETAILS.

CONCRETE QUANTITIES

| | |
|---|---|
| 2 CATCH BASINS AT 0.5 CU YDS = | 1.0 CU YDS |

STRUCTURAL STEEL QUANTITY

| | |
|---|---|
| 2 GRATE AND FRAMES AT 273 LBS = | 546 LBS |

| NO. | DATE | BY | REMARKS |
|---|---|---|---|

REVISIONS

UTAH DEPARTMENT OF TRANSPORTATION
SALT LAKE CITY, UTAH
STRUCTURES DIVISION

URS

DESIGN PH 12/04 CHECK GTD 12/04
DRAWN DKH 12/04 CHECK PH 12/04
QUANT. CDT 12/04 CHECK CEL 12/04

APPROVAL RECOMM. DATE SENIOR DESIGN ENGR.
APPROVED FOR USE BY UDOT DATE UDOT BRIDGE ENGR.

I-15; CORRIDOR IN UTAH COUNTY
OREM CENTER STREET OVERPASS
APPROACH SLAB DRAIN DETAILS

PROJECT NUMBER SP-15-6(52)241

UTAH
COUNTY

F-15W2
DRG. NO.

SHT. 21 OF 27

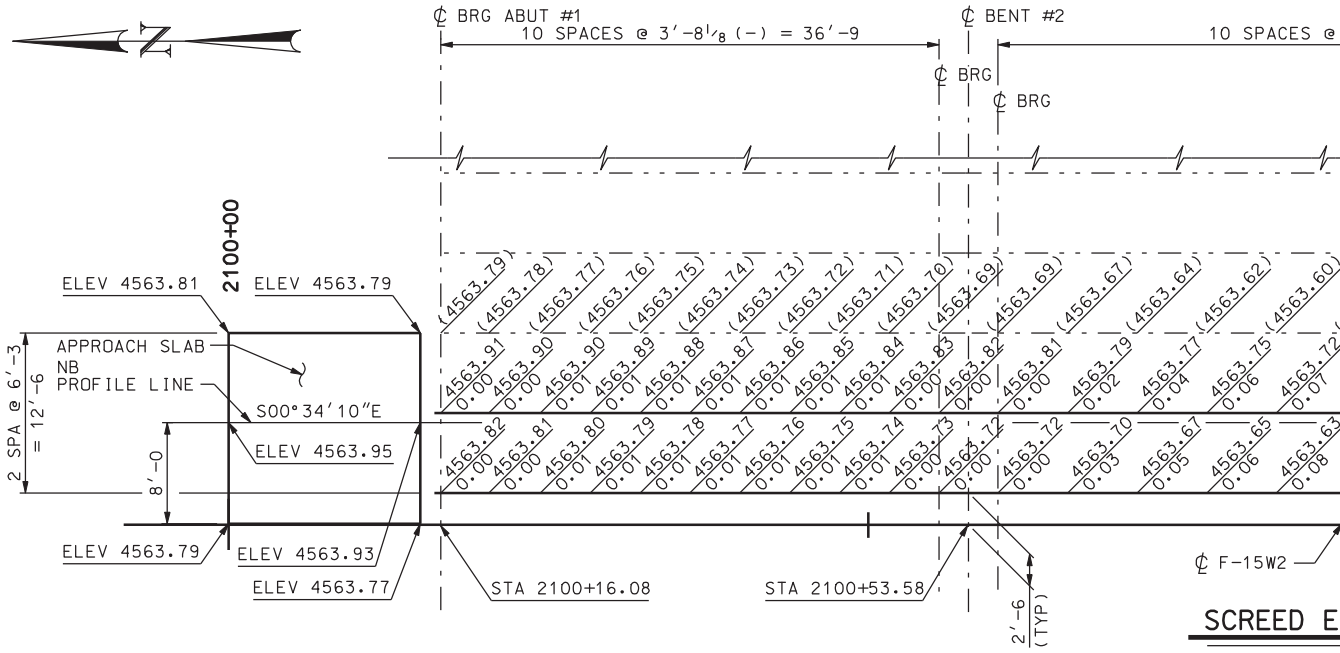


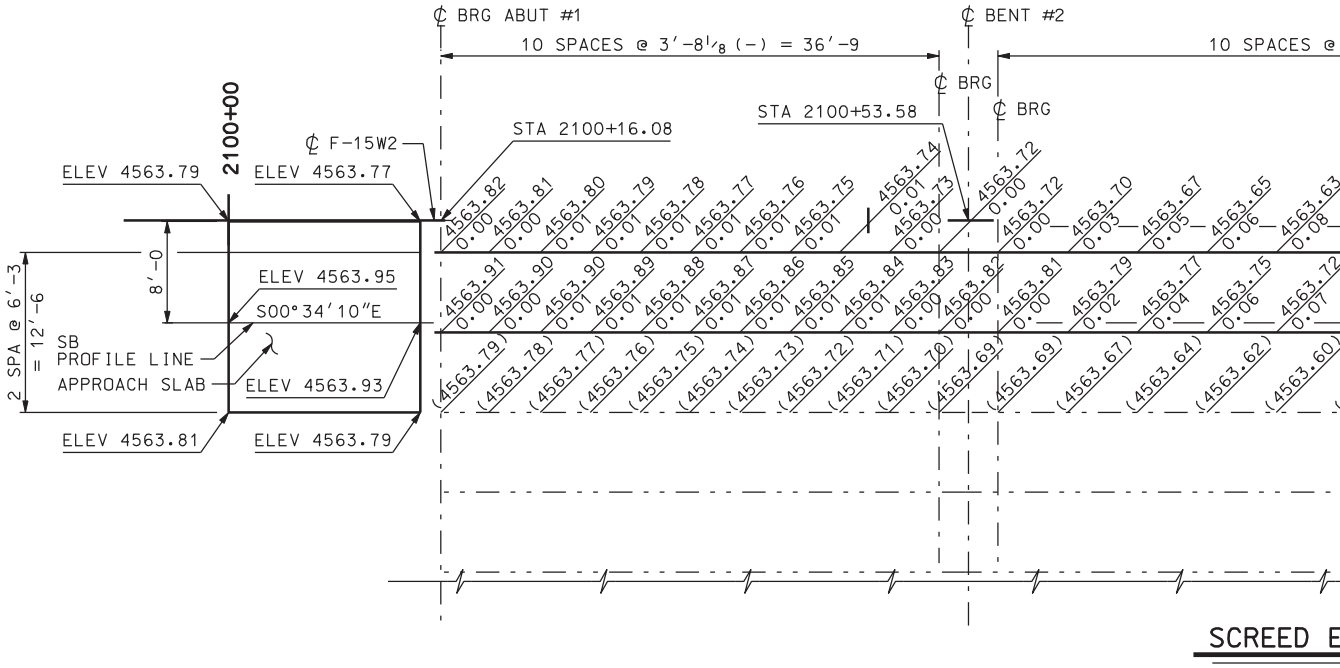


## NOTES

1. FIGURES ABOVE THE LINES ARE TOP OF CONCRETE DECK ELEVATION (FEET). FIGURES BELOW THE LINES ARE DEAD LOAD DEFLECTION (FEET) AND ARE TO BE ADDED TO ELEVATIONS SHOWN TO OBTAIN SCREED ELEVATIONS.
2. FIGURES SHOWN IN PARENTHESIS ARE APPROXIMATE TOP OF EXISTING CONCRETE DECK ELEVATION (FEET) BASED ON SURVEY INFORMATION.
3. LONGITUDINAL ELEVATIONS ARE MEASURED ALONG SURVEY LINE.
4. STATIONS AND OFFSETS ARE FROM ℄ F-15W2.
5. ADJUST APPROACH SLAB ELEVATIONS TO MATCH EXISTING APPROACH AND ROADWAY ELEVATIONS. IF UNDERMINING FOUND DURING CONSTRUCTION, FILL VOID IN FIELD.

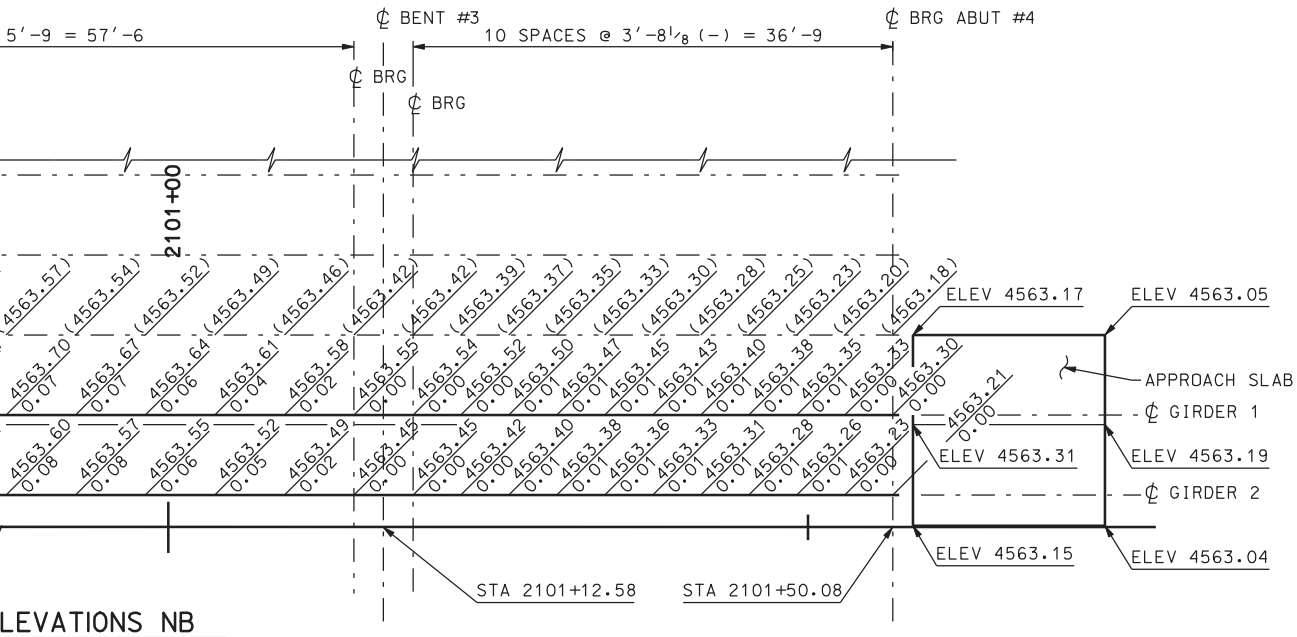


LEVATIONS NB

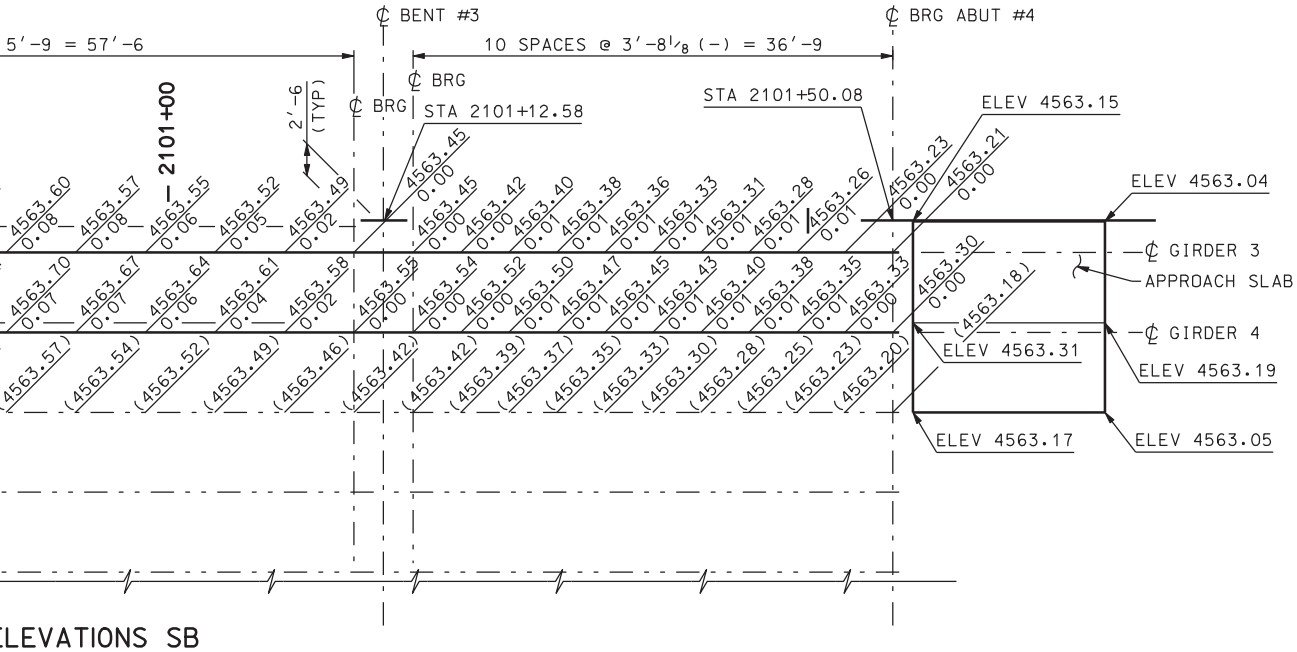


LEVATIONS SB

| NO. | DATE | BY | REMARKS |
|---|---|---|---|
| | | | |

REVISIONS

UTAH DEPARTMENT OF TRANSPORTATION
SALT LAKE CITY, UTAH
STRUCTURES DIVISION

URS

DESIGN PH 12/04 CHECK GTD 12/04
DRAWN DKH 12/04 CHECK PH 12/04
QUANT. CDT 12/04 CHECK CEL 12/04

APPROVAL RECOMM. DATE SENIOR DESIGN ENGR.
APPROVED FOR USE BY UDOT DATE UDOT BRIDGE ENGR.

I-15; CORRIDOR IN UTAH COUNTY
OREM CENTER STREET OVERPASS
SCREED ELEVATIONS

PROJECT NUMBER SP-15-6(52)241

UTAH
COUNTY

F-15W2
DRG. NO.

SHT. 22 OF 27

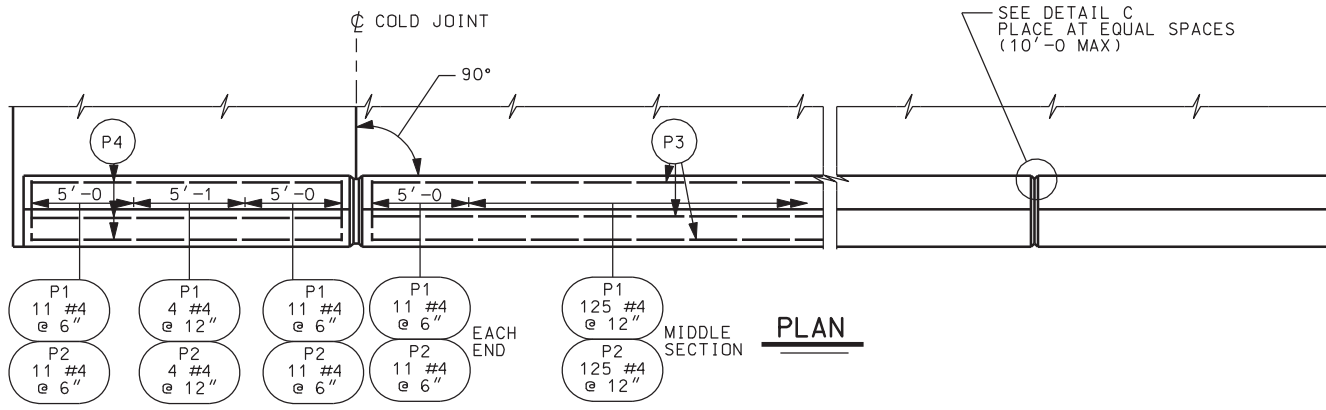


PLAN

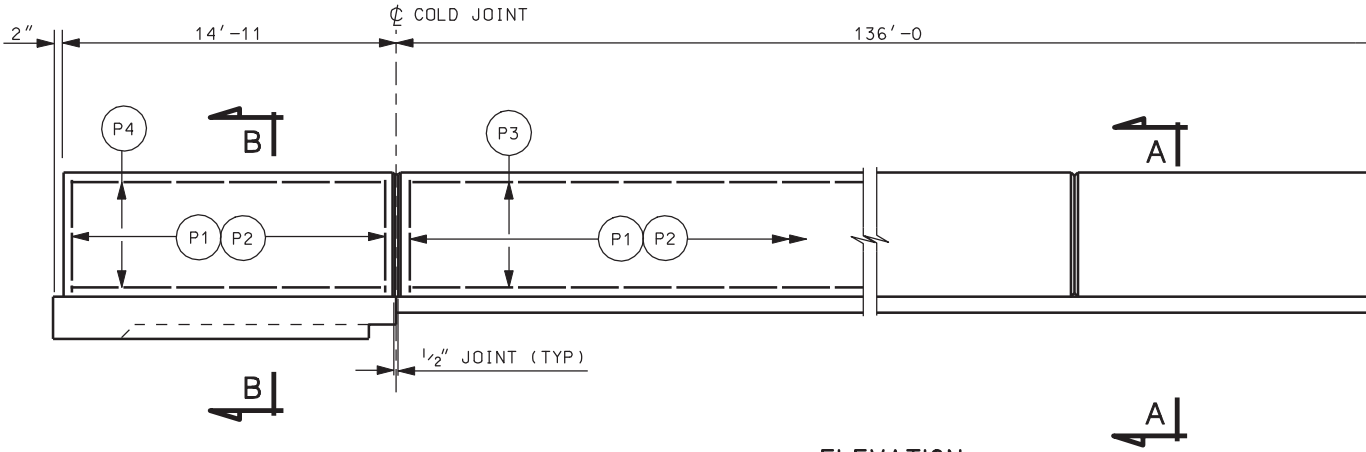


ELEVATION

ALL DIMENSIONS SHOWN ARE ALONG EDGE OF DECK

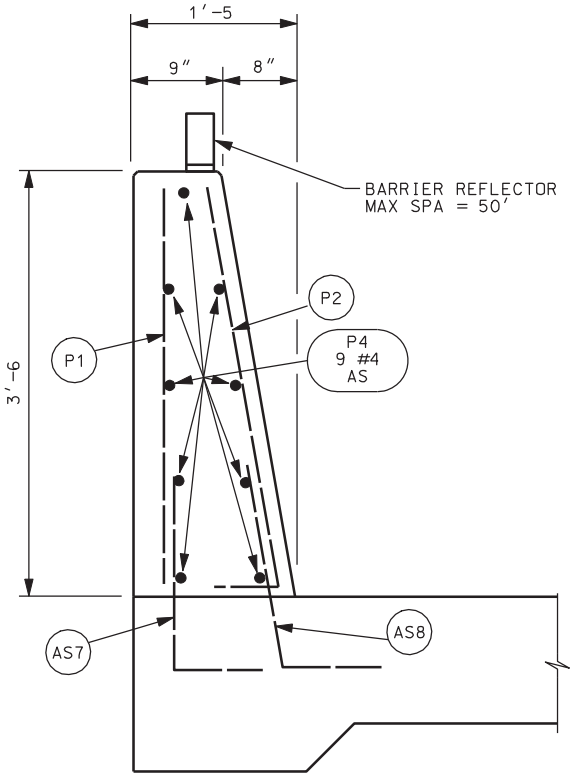


SECTION B-B

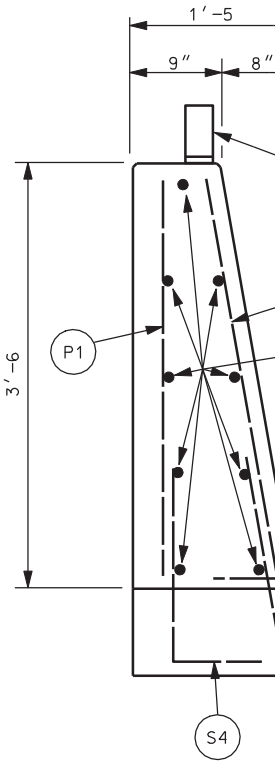


SECTION

DGN File: IP_PWPcdms1717\4433_F15_23.dgn

02-MAY-2005

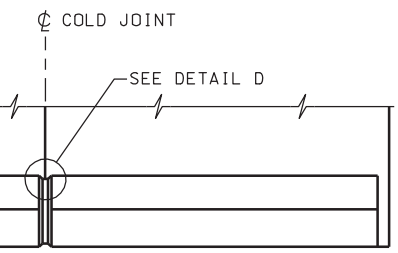


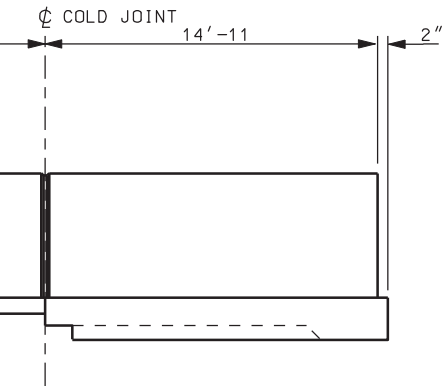


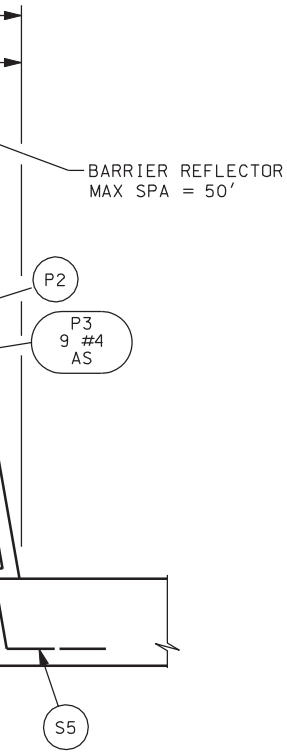


A-A

## NOTES

1. PROVIDE 2″ MIN COVER TO REINFORCING STEEL UNLESS NOTED OTHERWISE.
2. PLACE CONTRACTION JOINT ON SIDES AND TOP OF PARAPET.
3. EXTEND SEALANT AND FOAM BACKER ROD FROM DECK TO TOP OF PARAPET ON THE INSIDE PARAPET FACE AND ACROSS TOP OF PARAPET.

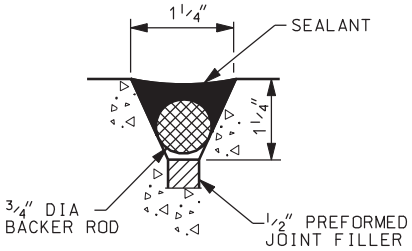


## DETAIL D

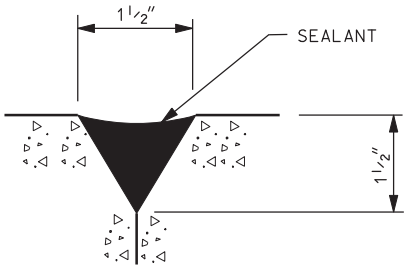


## DETAIL C

## CONCRETE QUANTITIES

| | |
|---|---|
| PARAPET NB & SB | 46.7 CU YDS |

| NO. | DATE | BY | REMARKS |
|---|---|---|---|
| | | | |

REVISIONS

UTAH DEPARTMENT OF TRANSPORTATION
SALT LAKE CITY, UTAH
STRUCTURES DIVISION

URS

UDOT

DESIGN PH 12/04 CHECK GTD 12/04
DRAWN DKH 12/04 CHECK PH 12/04
QUANT. CDT 12/04 CHECK CEL 12/04

APPROVAL RECOMM. DATE SENIOR DESIGN ENGR.
APPROVED FOR USE BY UDOT DATE UDOT BRIDGE ENGR.

I-15; CORRIDOR IN UTAH COUNTY
OREM CENTER STREET OVERPASS
PARAPET DETAILS
PROJECT NUMBER SP-15-6(52)241

UTAH
COUNTY

F-15W2
DRG. NO.

SHT. 23 OF 27

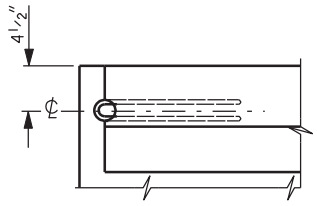


PLAN

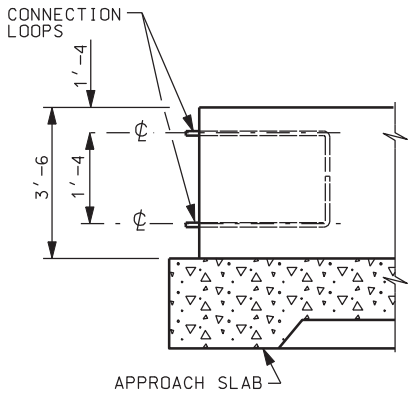


ELEVATION

STANDARD END DETAILS

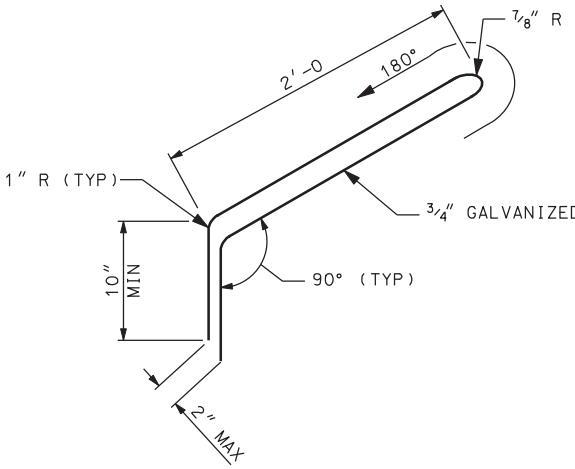


CONNECTION LOOP DETAIL

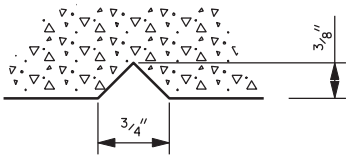


TYPICAL SECTION

THRU STRUCTURE NUMBER

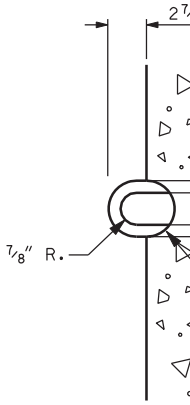


CON

DGN File:IP_PWPcdms1717\4433_F15_24.dgn

02-MAY-2005

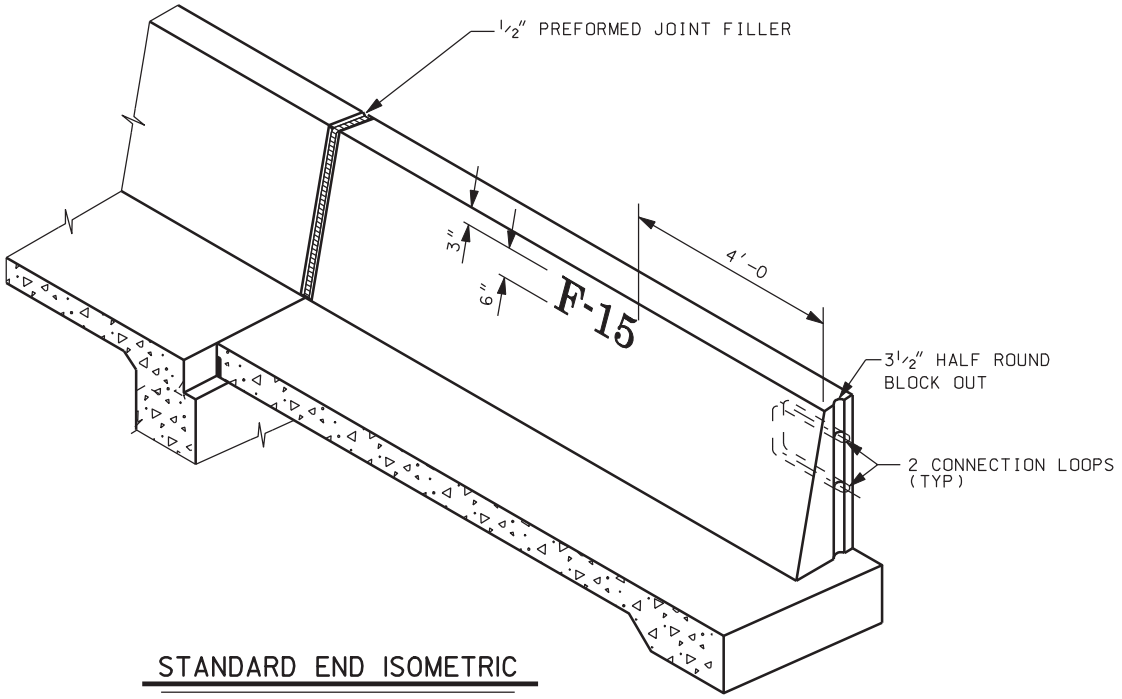


STANDARD END ISOMETRIC

D STEEL BAR

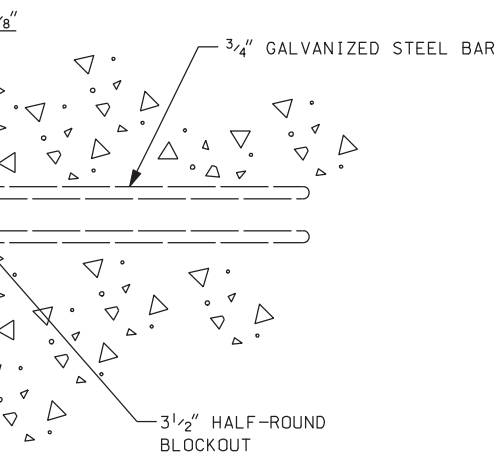


NECTION BAR END DETAIL

## NOTES

1. INSTALL BOTH CONNECTION LOOPS AND THREADED ANCHORS AT ALL PARAPET ENDS.
2. CONNECTION LOOPS NOT INCLUDED IN REINFORCING STEEL SCHEDULE.
3. LOCATE DRAWING NUMBER ON RIGHT-HAND SIDE OF APPROACH PARAPET.
4. SEE ROADWAY DETAILS SHEET DT-08 FOR CONNECTION DETAILS OF APPROACH SLAB PARAPET TO ROADWAY BARRIER.

| NO. | DATE | BY | REMARKS |
|---|---|---|---|

REVISIONS

UTAH DEPARTMENT OF TRANSPORTATION
SALT LAKE CITY, UTAH
STRUCTURES DIVISION

URS

DESIGN PH 12/04 CHECK GTD 12/04
DRAWN DKH 12/04 CHECK PH 12/04
QUANT. CDT 12/04 CHECK CEL 12/04

APPROVAL RECOMM. DATE SENIOR DESIGN ENGR.
APPROVED FOR USE BY UDOT DATE UDOT BRIDGE ENGR.

I-15; CORRIDOR IN UTAH COUNTY
OREM CENTER STREET OVERPASS
PARAPET END DETAILS

PROJECT NUMBER SP-15-6(52)241

UTAH
COUNTY

F-15W2
DRG. NO.

SHT. 24 OF 27

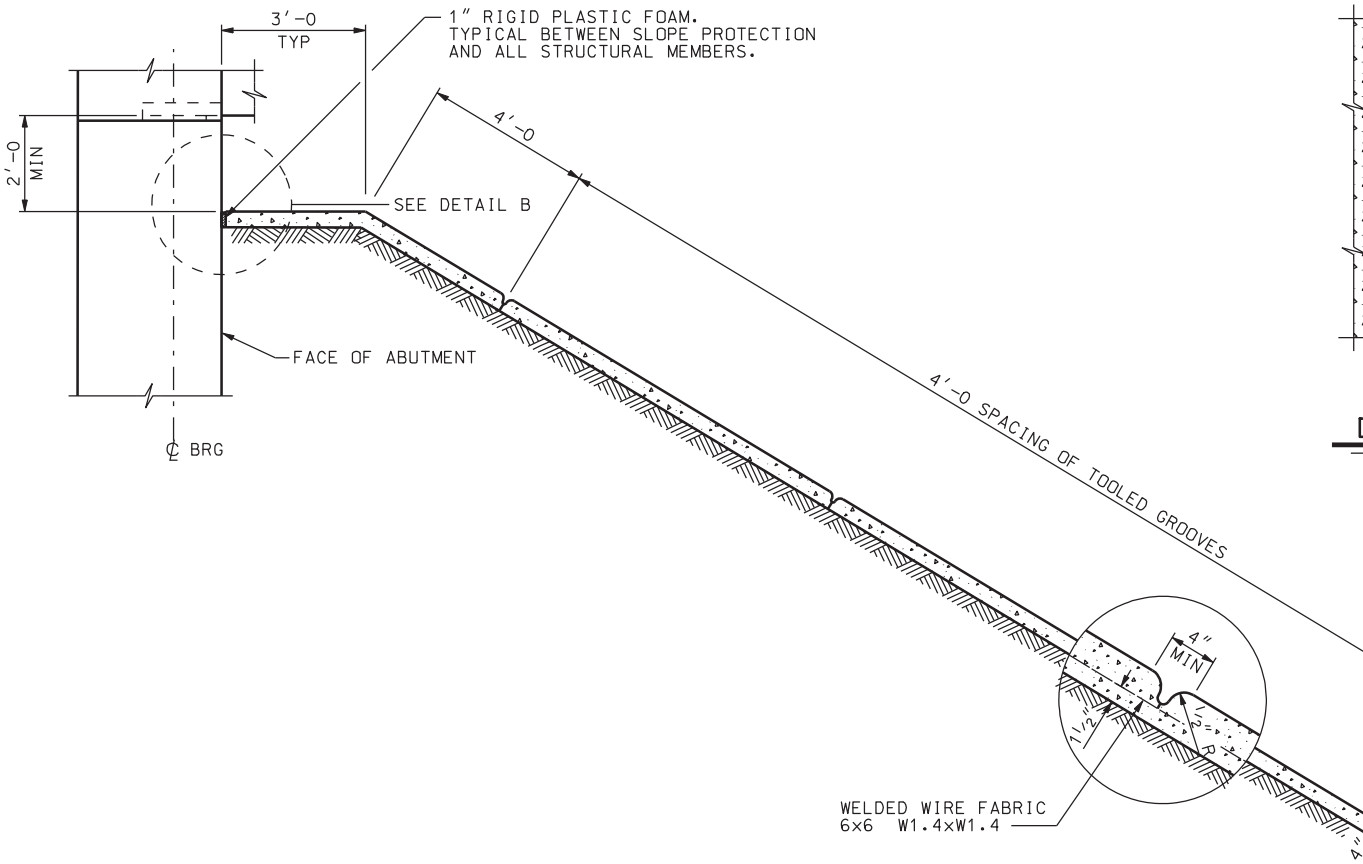


SEE DE

## SLOPE PROTECTION ELEVATION

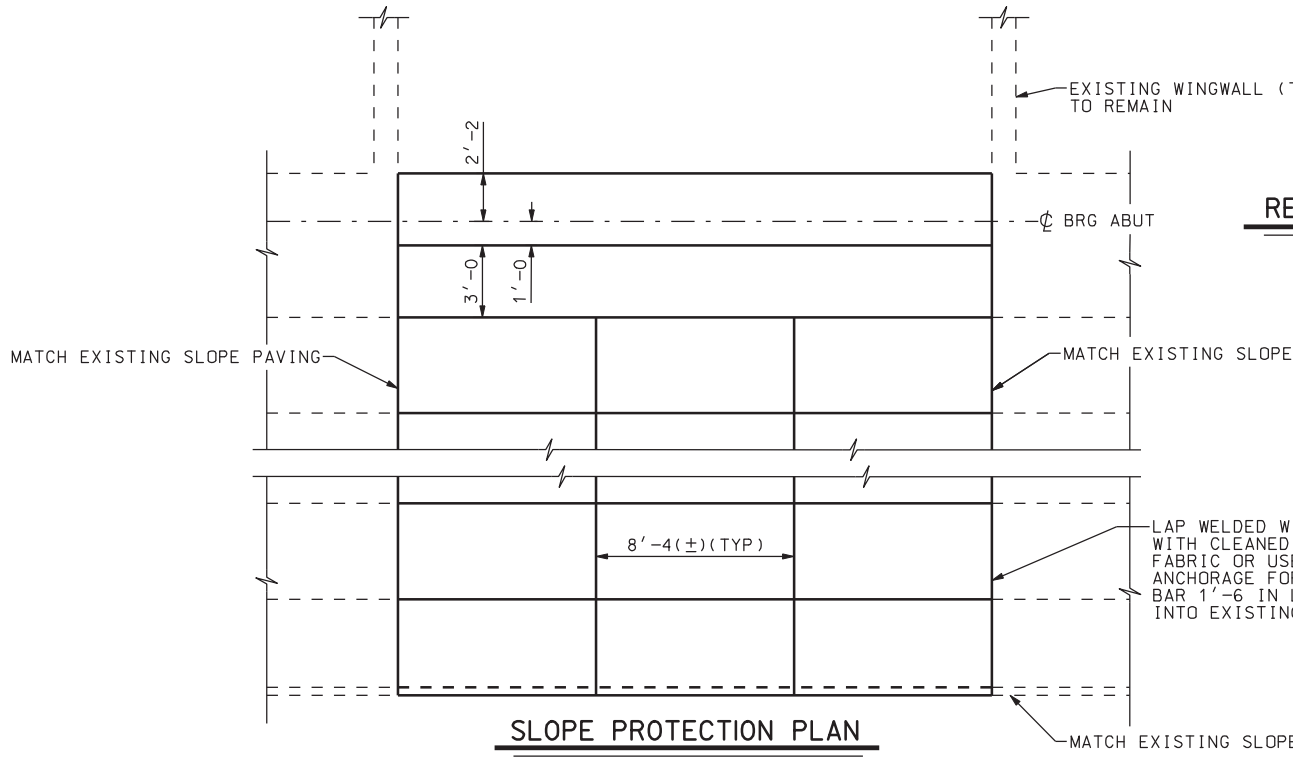


## SLOPE PROTECTION PLAN

RE

DGN File: IP_PWPdms1717\4433_F15_25.dgn

02-MAY-2005

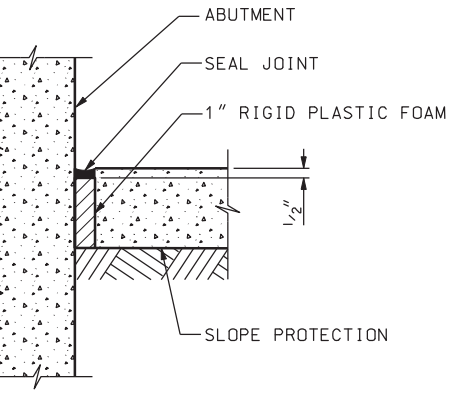


DETAIL B

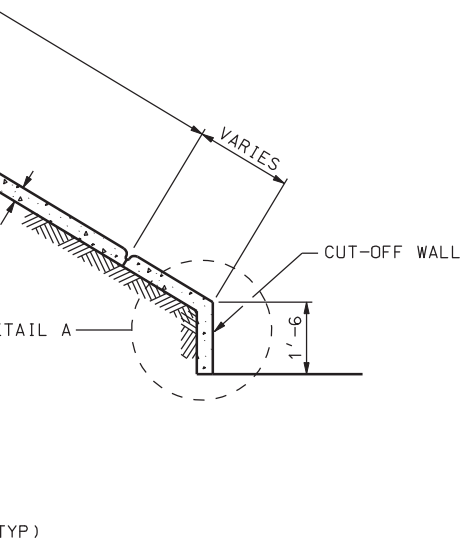


## NOTES

1. QUANTITIES GIVEN FOR CONCRETE SLOPE PROTECTION ARE ESTIMATES ONLY AND ARE BASED ON THE EXPOSED FINISHED CONCRETE SURFACE AREA.
2. LOCATION OF THE TOE OF SLOPE IS APPROXIMATE ONLY AND SHALL BE MODIFIED TO MEET FIELD CONDITIONS AS DIRECTED BY THE ENGINEER.
3. JUST PRIOR TO FINAL INSPECTION, SEAL JOINTS BETWEEN THE CONCRETE SLOPE PROTECTION AND ALL STRUCTURAL MEMBERS.
4. USE CLASS A (AE) FOR ALL SLOPE PROTECTION.
5. CUT-OFF WALL (1'-6 x 4" THICK) IS CONTINUOUS AROUND PERIMETER OF SLOPE PROTECTION EXCEPT AT THE ABUTMENT FOOTING. PAYMENT FOR CUT-OFF WALLS SHALL BE INCLUDED IN THE CONTRACT PRICE PER SQUARE YARD FOR CONCRETE SLOPE PROTECTION.
6. MATCH EXISTING CONCRETE SLOPE PAVING. SEE EXISTING BRIDGE PLANS F-15W FOR MORE DETAILS.
7. REMOVAL OF EXISTING CONCRETE SLOPE PROTECTION FOR SUBSTRUCTURE CONSTRUCTION IS INCIDENTAL TO THE COST OF CONCRETE SLOPE PAVING.

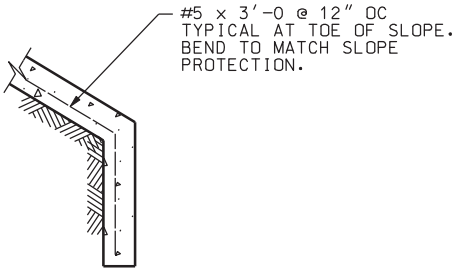


DETAIL A

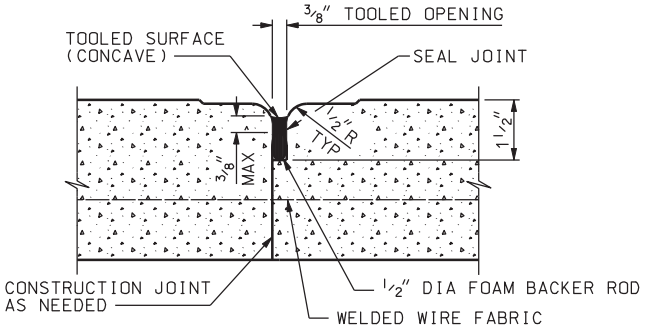


VERTICAL JOINT DETAIL

EPLACE CONCRETE SLOPE PROTECTION QUANTITIES

| | |
|---|---|
| CONCRETE ABUT #1 AND ABUT #4 | 202.8 SQ YDS |

PAVING

IRE FABRIC 1'-2 MIN
EXISTING WELDED WIRE
E AN APPROVED EPOXY
R A #3 REINFORCING STEEL
LENGTH AT 18", DEVELOP BAR 4" MIN
G CONCRETE SLOPE PROTECTION (TYP).

E PAVING

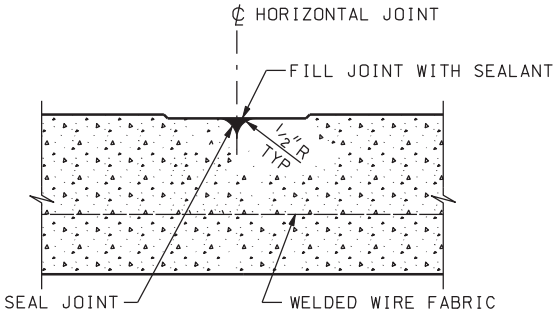


HORIZONTAL JOINT DETAIL

| NO. | DATE | BY | REMARKS |
|---|---|---|---|
| | | | |

REVISIONS

UTAH DEPARTMENT OF TRANSPORTATION
SALT LAKE CITY, UTAH
STRUCTURES DIVISION

URS

UDOT

DESIGN PH 12/04 CHECK GTD 12/04
DRAWN DKH 12/04 CHECK PH 12/04
QUANT. CDT 12/04 CHECK CEL 12/04

APPROVAL RECOMM. DATE SENIOR DESIGN ENGR.
APPROVED FOR USE BY UDOT DATE UDOT BRIDGE ENGR.

I-15; CORRIDOR IN UTAH COUNTY
OREM CENTER STREET OVERPASS
CONCRETE SLOPE PROTECTION

PROJECT NUMBER SP-15-6(52)241

UTAH
COUNTY

F-15W2
DRG. NO.

SHT. 25 OF 27

| MARK | LOCATION | SIZE | NO. | LENGTH | TOTAL LENGTH | BAR TYPE |
|---|---|---|---|---|---|---|
| A1 | ABUTMENT | 7 | 48 | 9'-6 | 456'-0 | 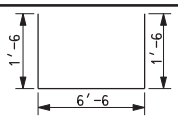  |
| A2 | ABUTMENT | 7 | 32 | 10'-5 | 333'-4 | |
| A3 | ABUTMENT | 5 | 48 | 10'-5 | 500'-0 | |
| A4 | ABUTMENT | 5 | 48 | 9'-6 | 456'-0 | 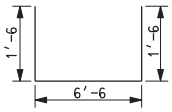  |
| A5 | ABUTMENT | 7 | 48 | 8'-1 | 388'-0 | 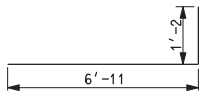  |
| A6 | ABUTMENT | 5 | 48 | 6'-11 | 332'-0 | |
| A7 | ABUTMENT | 7 | 56 | 10'-6 | 588'-0 | |
| A8 | ABUTMENT | 5 | 48 | 4'-8 | 224'-0 | |
| A9 | ABUTMENT | 5 | 56 | 4'-6 | 252'-0 | 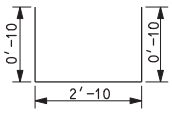  |
| A10 | ABUTMENT | 5 | 72 | 12'-3 | 882'-0 | |
| A11 | ABUTMENT | 5 | 72 | 4'-3 | 306'-0 | |
| A12 | ABUTMENT | 5 | 32 | 4'-3 | 136'-0 | |
| A13 | ABUTMENT | 7 | 32 | 4'-7 | 146'-8 | |
| A14 | ABUTMENT | 5 | 16 | 4'-3 | 68'-0 | |
| A15 | ABUTMENT | 5 | 32 | 3'-8 | 117'-4 | 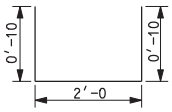  |
| A16 | ABUTMENT | 5 | 8 | 6'-10 | 54'-8 | |
| AD1 | ABUT DIAPHR. | 5 | 48 | 9'-11 | 476'-0 | HOOK DIAMETER $\phi$ = 0'-2 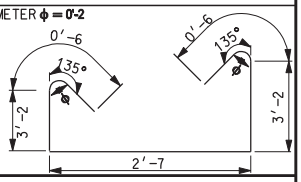  |
| AD2 | ABUT DIAPHR. | 5 | 80 | 4'-1 | 326'-8 | |
| AD3 | ABUT DIAPHR. | 5 | 24 | 14'-7 | 350'-0 | |
| AD4 | ABUT DIAPHR. | 5 | 48 | 4'-3 | 204'-0 | 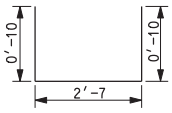  |
| AD5 | ABUT DIAPHR. | 5 | 320 | 2'-2 | 693'-4 | |
| AD6 | ABUT DIAPHR. | 5 | 16 | 5'-3 | 84'-0 | 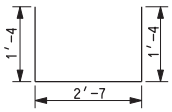  |
| | | | | | | A B |
| AD7 | ABUT DIAPHR. | 5 | 48 | 3'-0 | 144'-0 | 2'-0 1'-0 |
| AD8 | ABUT DIAPHR. | 5 | 160 | 3'-6 | 560'-0 | 2'-6 1'-0 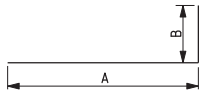  |
| AD9 | ABUT DIAPHR. | 4 | 160 | 1'-6 | 240'-0 | |
| B1 | BENT CAP | 9 | 16 | 17'-2 | 274'-8 | 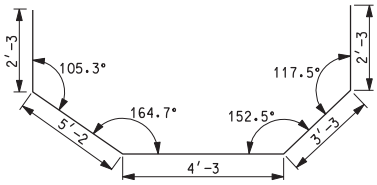  |
| B2 | BENT CAP | 6 | 32 | 12'-2 | 389'-4 | |

| MARK | LOCATION | SIZE | NO. | LENGTH | TOTA LENGT |
|---|---|---|---|---|---|
| B3 | BENT CAP | 9 | 32 | 16'-6 | 528' |
| B4 | BENT CAP | 6 | 8 | 8'-8 | 69'- |
| B5 | BENT CAP | 5 | 44 | 11'-6 | 506' |
| B6 | BENT CAP | 5 | 4 | 11'-2 | 44'- |
| B7 | BENT CAP | 5 | 4 | 10'-8 | 42'- |
| B8 | BENT CAP | 5 | 4 | 10'-4 | 41'- |
| B9 | BENT CAP | 5 | 4 | 9'-10 | 39'- |
| B10 | BENT CAP | 5 | 4 | 9'-4 | 37'- |
| B11 | BENT CAP | 5 | 4 | 9'-0 | 36'- |
| B12 | BENT CAP | 5 | 4 | 8'-6 | 34'- |
| B13 | BENT CAP | 5 | 4 | 11'-2 | 44'- |
| B14 | BENT CAP | 5 | 4 | 11'-0 | 44'- |
| B15 | BENT CAP | 5 | 4 | 10'-8 | 42'- |
| B16 | BENT CAP | 5 | 4 | 10'-6 | 42'- |
| B17 | BENT CAP | 5 | 4 | 10'-2 | 40'- |
| B18 | BENT CAP | 5 | 4 | 10'-0 | 40'- |
| B19 | BENT CAP | 5 | 4 | 9'-8 | 38'- |
| B20 | BENT CAP | 5 | 4 | 9'-6 | 38'- |
| B21 | BENT CAP | 5 | 4 | 9'-2 | 36'- |
| B22 | BENT CAP | 5 | 4 | 9'-0 | 36'- |
| B23 | BENT CAP | 5 | 4 | 8'-8 | 34'- |
| B24 | BENT CAP | 5 | 4 | 8'-6 | 34'- |
| B25 | BENT CAP | 9 | 16 | 3'-4 | 53'- |
| B26 | BENT CAP | 5 | 52 | 2'-6 | 130' |
| B27 | BENT CAP | 5 | 88 | 4'-8 | 410' |
| B28 | BENT CAP | 5 | 8 | 4'-6 | 36'- |
| B29 | BENT CAP | 5 | 8 | 4'-3 | 34'- |
| B30 | BENT CAP | 5 | 8 | 4'-1 | 32'- |
| B31 | BENT CAP | 5 | 8 | 3'-10 | 30'- |
| B32 | BENT CAP | 5 | 8 | 3'-7 | 28'- |
| B33 | BENT CAP | 5 | 8 | 3'-5 | 27'- |
| B34 | BENT CAP | 5 | 8 | 3'-2 | 25'- |
| B35 | BENT CAP | 5 | 8 | 4'-6 | 36'- |
| B36 | BENT CAP | 5 | 8 | 4'-5 | 35'- |
| B37 | BENT CAP | 5 | 8 | 4'-3 | 34'- |
| B38 | BENT CAP | 5 | 8 | 4'-2 | 33'- |
| B39 | BENT CAP | 5 | 8 | 4'-0 | 32'- |
| B40 | BENT CAP | 5 | 8 | 3'-11 | 31'- |
| B41 | BENT CAP | 5 | 8 | 3'-9 | 30'- |
| B42 | BENT CAP | 5 | 8 | 3'-8 | 29'- |
| B43 | BENT CAP | 5 | 8 | 3'-6 | 28'- |
| B44 | BENT CAP | 5 | 8 | 3'-5 | 27'- |
| B45 | BENT CAP | 5 | 8 | 3'-3 | 26'- |
| B46 | BENT CAP | 5 | 8 | 3'-2 | 25'- |
| B47 | BENT CAP | 6 | 8 | 11'-1 | 88'- |
| B48 | BENT CAP | 6 | 8 | 6'-1 | 48'- |
| B49 | BENT CAP | 5 | 120 | 4'-2 | 500' |

| L TH | BAR TYPE |
|---|---|
| -0 | 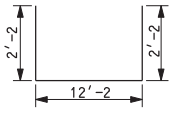 |



| -4 | | | | | | | | |
|---|---|---|---|---|---|---|---|---|
| | A | B | C | D | E | F | G | H |
| -0 | 3'-2 | 3'-8 | 3'-8 | 0'-6 | 0'-6 | 135 | 135 | 0'-2 |
| -8 | 3'-2 | 3'-6 | 3'-6 | 0'-6 | 0'-6 | 135 | 135 | 0'-2 |
| -8 | 3'-2 | 3'-3 | 3'-3 | 0'-6 | 0'-6 | 135 | 135 | 0'-2 |
| -4 | 3'-2 | 3'-1 | 3'-1 | 0'-6 | 0'-6 | 135 | 135 | 0'-2 |
| -4 | 3'-2 | 2'-10 | 2'-10 | 0'-6 | 0'-6 | 135 | 135 | 0'-2 |
| -4 | 3'-2 | 2'-7 | 2'-7 | 0'-6 | 0'-6 | 135 | 135 | 0'-2 |
| -0 | 3'-2 | 2'-5 | 2'-5 | 0'-6 | 0'-6 | 135 | 135 | 0'-2 |
| -0 | 3'-2 | 2'-2 | 2'-2 | 0'-6 | 0'-6 | 135 | 135 | 0'-2 |
| -8 | 3'-2 | 3'-6 | 3'-6 | 0'-6 | 0'-6 | 135 | 135 | 0'-2 |
| -0 | 3'-2 | 3'-5 | 3'-5 | 0'-6 | 0'-6 | 135 | 135 | 0'-2 |
| -8 | 3'-2 | 3'-3 | 3'-3 | 0'-6 | 0'-6 | 135 | 135 | 0'-2 |
| -0 | 3'-2 | 3'-2 | 3'-2 | 0'-6 | 0'-6 | 135 | 135 | 0'-2 |
| -8 | 3'-2 | 3'-0 | 3'-0 | 0'-6 | 0'-6 | 135 | 135 | 0'-2 |
| -0 | 3'-2 | 2'-11 | 2'-11 | 0'-6 | 0'-6 | 135 | 135 | 0'-2 |
| -8 | 3'-2 | 2'-9 | 2'-9 | 0'-6 | 0'-6 | 135 | 135 | 0'-2 |
| -0 | 3'-2 | 2'-8 | 2'-8 | 0'-6 | 0'-6 | 135 | 135 | 0'-2 |
| -8 | 3'-2 | 2'-6 | 2'-6 | 0'-6 | 0'-6 | 135 | 135 | 0'-2 |
| -0 | 3'-2 | 2'-5 | 2'-5 | 0'-6 | 0'-6 | 135 | 135 | 0'-2 |
| -8 | 3'-2 | 2'-3 | 2'-3 | 0'-6 | 0'-6 | 135 | 135 | 0'-2 |
| -0 | 3'-2 | 2'-2 | 2'-2 | 0'-6 | 0'-6 | 135 | 135 | 0'-2 |

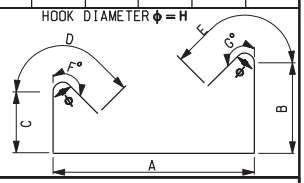



| -4 | |
|---|---|
| -0 | |

| | A | B | C | D | E |
|---|---|---|---|---|---|
| -8 | 3'-8 | 0'-6 | 0'-6 | 135 | 0'-2 |
| -0 | 3'-6 | 0'-6 | 0'-6 | 135 | 0'-2 |
| -0 | 3'-3 | 0'-6 | 0'-6 | 135 | 0'-2 |
| -8 | 3'-1 | 0'-6 | 0'-6 | 135 | 0'-2 |
| -8 | 2'-10 | 0'-6 | 0'-6 | 135 | 0'-2 |
| -8 | 2'-7 | 0'-6 | 0'-6 | 135 | 0'-2 |
| -4 | 2'-5 | 0'-6 | 0'-6 | 135 | 0'-2 |
| -4 | 2'-2 | 0'-6 | 0'-6 | 135 | 0'-2 |
| -0 | 3'-6 | 0'-6 | 0'-6 | 135 | 0'-2 |
| -4 | 3'-5 | 0'-6 | 0'-6 | 135 | 0'-2 |
| -0 | 3'-3 | 0'-6 | 0'-6 | 135 | 0'-2 |
| -4 | 3'-2 | 0'-6 | 0'-6 | 135 | 0'-2 |
| -0 | 3'-0 | 0'-6 | 0'-6 | 135 | 0'-2 |
| -4 | 2'-11 | 0'-6 | 0'-6 | 135 | 0'-2 |
| -0 | 2'-9 | 0'-6 | 0'-6 | 135 | 0'-2 |
| -4 | 2'-8 | 0'-6 | 0'-6 | 135 | 0'-2 |
| -0 | 2'-6 | 0'-6 | 0'-6 | 135 | 0'-2 |
| -4 | 2'-5 | 0'-6 | 0'-6 | 135 | 0'-2 |
| -0 | 2'-3 | 0'-6 | 0'-6 | 135 | 0'-2 |
| -4 | 2'-2 | 0'-6 | 0'-6 | 135 | 0'-2 |

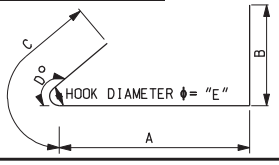



| -8 | |
|---|---|
| -8 | |
| -0 | |

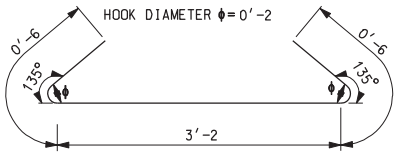



| MARK | LOCATION | SIZE | NO. | LENGTH | TOTAL LENGTH | BAR TYPE |
|---|---|---|---|---|---|---|
| D1 | BENT DIAPHR. | 5 | 48 | 12'-2 | 584'-0 | 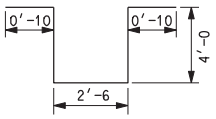 |
| D2 | BENT DIAPHR. | 5 | 144 | 3'-2 | 456'-0 | |
| D3 | BENT DIAPHR. | 5 | 8 | 12'-0 | 96'-0 | |
| D4 | BENT DIAPHR. | 5 | 48 | 4'-2 | 200'-0 | 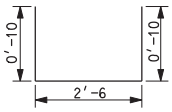 |
| D5 | BENT DIAPHR. | 5 | 800 | 2'-10 | 2,266'-8 | |
| D6 | BENT DIAPHR. | 5 | 160 | 2'-4 | 373'-4 | |
| D7 | BENT DIAPHR. | 5 | 160 | 4'-6 | 720'-0 | 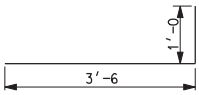 |
| D8 | BENT DIAPHR. | 5 | 160 | 1'-0 | 160'-0 | |
| D9 | BENT DIAPHR. | 5 | 16 | 4'-0 | 64'-0 | 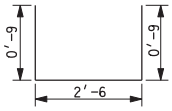 |









| | | | | | | A | B | C |
|---|---|---|---|---|---|---|---|---|
| F1 | BENT FOUND. | 8 | 112 | 13'-0 | 1,456'-0 | 8'-6 | 2'-3 | 2'-3 |
| F2 | BENT FOUND. | 10 | 40 | 15'-0 | 600'-0 | 10'-6 | 2'-3 | 2'-3 |
| F3 | BENT FOUND. | 8 | 56 | 15'-0 | 840'-0 | 10'-6 | 2'-3 | 2'-3 |

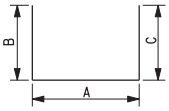



| | | | | | | |
|---|---|---|---|---|---|---|
| F4 | BENT FOUND. | 5 | 320 | 3'-6 | 1,120'-0 | 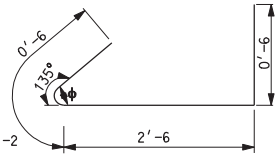 |



| | | | | | | A | B | C |
|---|---|---|---|---|---|---|---|---|
| C1 | BENT2 COLUMN | 11 | 4 | 28'-5 | 113'-8 | 2'-8 | 23'-1 | 2'-8 |
| C1 | BENT3 COLUMN | 11 | 4 | 28'-0 | 112'-0 | 2'-8 | 22'-8 | 2'-8 |

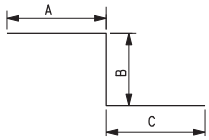



| | | | | | | A | B | C |
|---|---|---|---|---|---|---|---|---|
| C2 | BENT2 COLUMN | 11 | 8 | 28'-5 | 227'-4 | 2'-8 | 23'-1 | 2'-8 |
| C2 | BENT3 COLUMN | 11 | 8 | 28'-0 | 224'-0 | 2'-8 | 22'-8 | 2'-8 |

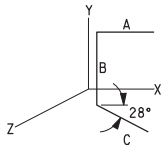



| | | | | | | |
|---|---|---|---|---|---|---|
| C3 | BENT2 COLUMN | 11 | 4 | 28'-5 | 113'-8 | 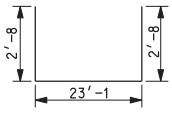 |
| C3 | BENT3 COLUMN | 11 | 4 | 28'-0 | 112'-0 | 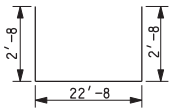 |





| | | | | | |
|---|---|---|---|---|---|
| C4 | BENT2 COLUMN | 4 | 8 | 23'-1 | 184'-8 |
| C4 | BENT3 COLUMN | 4 | 8 | 22'-8 | 181'-4 |

| NO. | DATE | BY | REMARKS |
|---|---|---|---|
| | | | |

REVISIONS

UTAH DEPARTMENT OF TRANSPORTATION
SALT LAKE CITY, UTAH
STRUCTURES DIVISION

URS

UDOT

DESIGN PH 12/04 CHECK GTD 12/04
DRAWN DKH 12/04 CHECK PH 12/04
QUANT. GTD 12/04 CHECK CEL 12/04

APPROVAL RECOMM. DATE SENIOR DESIGN ENGR.
APPROVED FOR USE BY UDOT DATE UDOT BRIDGE ENGR.

I-15; CORRIDOR IN UTAH COUNTY
OREM CENTER STREET OVERPASS
REINFORCING SCHEDULE 1

PROJECT NUMBER SP-15-6(52)241

UTAH
COUNTY

F-15W2
DRG. NO.

SHT. 26 OF 27

| MARK | LOCATION | SIZE | NO. | LENGTH | TOTAL LENGTH | BAR TYPE |
|---|---|---|---|---|---|---|
| C5 | BENT2 COLUMN | 5 | 2 | 586′-10 | 1,173′-8 | |
| C5 | BENT3 COLUMN | 5 | 2 | 576′-8 | 1,153′-4 | |
| C6 | BENT COLUMN | 4 | 132 | 8′-0 | 1,056′-0 | |
| C7 | BENT 2 COLUMN | 11 | 8 | 28′-5 | 227′-4 | A 2′-8 B 23′-1 C 2′-8 |
| C7 | BENT 3 COLUMN | 11 | 8 | 28′-0 | 224′-0 | A 2′-8 B 22′-8 C 2′-8 |
| ID1 | INT. DIAPH. | 4 | 80 | 6′-8 | 533′-4 | |
| ID2 | INT. DIAPH. | 4 | 40 | 3′-2 | 126′-8 | |
| ID3 | INT. DIAPH. | 6 | 40 | 5′-2 | 206′-8 | |
| ID4 | INT. DIAPH. | 6 | 20 | 11′-5 | 228′-4 | |
| ID5 | INT. DIAPH. | 6 | 40 | 2′-6 | 100′-0 | |
| S1 | DECK | 5 | 550 | 14′-9 | 8,112′-6 | |
| S2 | DECK | 5 | 32 | 143′-9 | 4,600′-0 | |
| S3 | DECK | 6 | 34 | 145′-3 | 4,938′-6 | |
| S4 | DECK | 4 | 294 | 3′-7 | 1,053′-6 | |
| S5 | DECK | 4 | 294 | 4′-2 | 1,225′-0 | |
| S6 | DECK | 6 | 56 | 56′-2 | 3,145′-4 | |
| S7 | DECK | 5 | 60 | 3′-0 | 180′-0 | |
| S8 | DECK | 5 | 270 | 6′-0 | 1,620′-0 | |
| AS1 | AP. SLAB | 5 | 128 | 14′-10 | 1,898′-8 | |
| AS2 | AP. SLAB | 5 | 64 | 14′-9 | 944′-0 | |
| AS3 | AP. SLAB | 7 | 64 | 14′-9 | 944′-0 | |

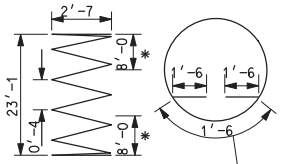


OPTIONAL SPLICE WITH 135° END HOOK

* LAP SPLICE NOT PERMITTED

1½ TURNS TYP. TOP AND BOTTOM

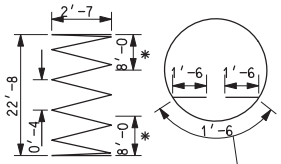


OPTIONAL SPLICE WITH 135° END HOOK

* LAP SPLICE NOT PERMITTED

1½ TURNS TYP. TOP AND BOTTOM

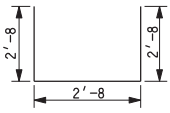


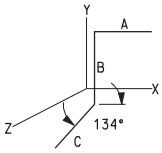


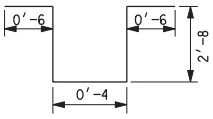


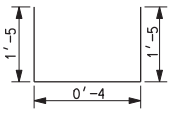


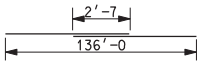


3 SPLICE(S) REQ'D

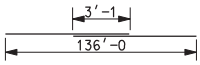


3 SPLICE(S) REQ'D

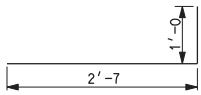


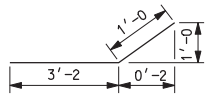


| MARK | LOCATION | SIZE | NO. | LENGTH | TOTA LENGT |
|---|---|---|---|---|---|
| AS4 | AP. SLAB | 6 | 12 | 14′-10 | 178′ |
| AS5 | AP. SLAB | 4 | 128 | 6′-2 | 789′ |
| AS6 | AP. SLAB | 7 | 12 | 14′-9 | 177′ |
| AS7 | AP. SLAB | 4 | 104 | 3′-7 | 372′ |
| AS8 | AP. SLAB | 4 | 104 | 4′-2 | 433′ |
| CB1 | CATCH BASIN | 5 | 12 | 9′-10 | 118′ |
| CB2 | CATCH BASIN | 5 | 4 | 13′-0 | 52′ |
| CB3 | CATCH BASIN | 5 | 4 | 2′-8 | 10′ |
| P1 | PARAPET | 4 | 398 | 3′-2 | 1,260 |
| P2 | PARAPET | 4 | 398 | 3′-10 | 1,525 |
| P3 | PARAPET | 4 | 18 | 143′-6 | 2,583′ |
| P4 | PARAPET | 4 | 36 | 14′-9 | 531′ |

| L TH | BAR TYPE |
|---|---|
| -0 | |
| -4 | 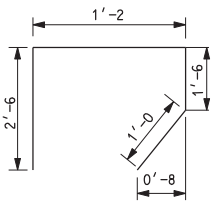  |
| -0 | |
| -8 | 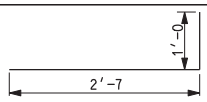  |
| -4 | 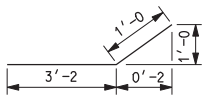  |
| -0 | 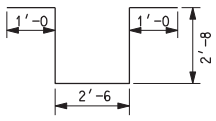  |
| -0 | 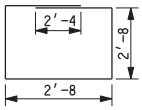  |
| -8 | |
| '-4 | |
| '-8 | 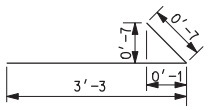  |
| 0 | 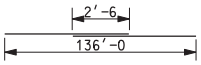  3 SPLICE(S) REQ'D |
| -0 | |

SUMMARY OF COATED BARS

| | | | | | | |
|---|---|---|---|---|---|---|
| 12,095'-10 | OF NUMBER | 4 BARS AT | 0.668 | LBS/FT = | 8,080.0 | LBS |
| 34,945'-7 | OF NUMBER | 5 BARS AT | 1.043 | LBS/FT = | 36,448.2 | LBS |
| 9,392'-10 | OF NUMBER | 6 BARS AT | 1.502 | LBS/FT = | 14,108.0 | LBS |
| 3,033'-0 | OF NUMBER | 7 BARS AT | 2.044 | LBS/FT = | 6,199.5 | LBS |
| 2,296'-0 | OF NUMBER | 8 BARS AT | 2.670 | LBS/FT = | 6,130.3 | LBS |
| 856'-0 | OF NUMBER | 9 BARS AT | 3.400 | LBS/FT = | 2,910.4 | LBS |
| 600'-0 | OF NUMBER | 10 BARS AT | 4.303 | LBS/FT = | 2,581.8 | LBS |
| 1,354'-0 | OF NUMBER | 11 BARS AT | 5.313 | LBS/FT = | 7,193.8 | LBS |
| | | | | TOTAL | 83,652.0 | LBS |

NOTES:

ALL BARS ARE COATED

BAR SIZES ARE U.S. UNITS.

REINFORCING STEEL DIMENSIONS ARE OUT TO OUT OF BAR UNLESS OTHERWISE SPECIFIED.

SPLICES MAY BE OMITTED AT FABRICATORS OPTION...HOWEVER, IN SUCH CASE, FABRICATOR ASSUMES RESPONSIBILITY FOR FIT.

| NO. | DATE | BY | REMARKS |
|---|---|---|---|
| | | | |

REVISIONS

UTAH DEPARTMENT OF TRANSPORTATION
SALT LAKE CITY, UTAH
STRUCTURES DIVISION

URS

DESIGN PH 12/04 CHECK GTD 12/04
DRAWN DKH 12/04 CHECK PH 12/04
QUANT. GTD 12/04 CHECK CEL 12/04

APPROVAL RECOMM. DATE SENIOR DESIGN ENGR.
APPROVED FOR USE BY UDOT DATE UDOT BRIDGE ENGR.

I-15; CORRIDOR IN UTAH COUNTY
OREM CENTER STREET OVERPASS
REINFORCING SCHEDULE 2

PROJECT NUMBER SP-15-6(52)241

UTAH
COUNTY

F-15W2
DRG. NO.

SHT. 27 OF 27

PLAN

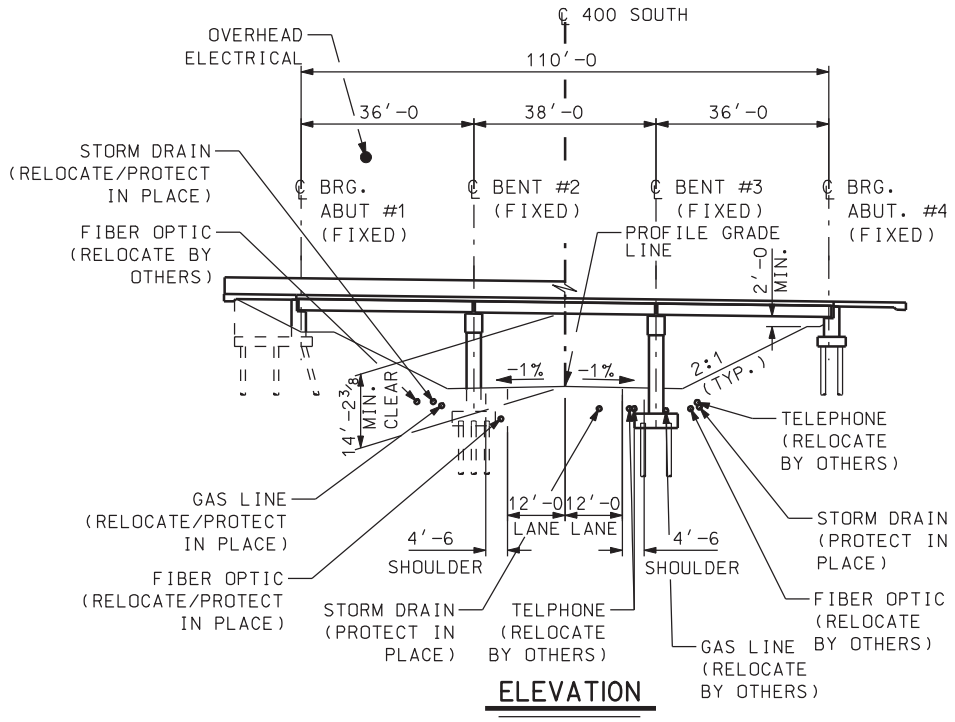


ELEVATION

## INDEX OF SHEET


1. SITUATION AND LAYO
2. SITUATION AND LAYO
3. SOIL DATA SHEET
4. FOUNDATION PLAN
5. DRIVEN PILE DETAIL
6. ABUTMENT #1 DETAIL
7. ABUTMENT #4 DETAIL
8. BENT PLAN AND ELEV
9. BENT DETAILS 1
10. BENT DETAILS 2
11. FRAMING PLAN
12. BEAM DETAILS; SPAN
13. BEAM DETAILS; SPAN
14. DECK PLAN AND SECT
15. DECK & APPROACH SL
16. EXISTING DIAPHRAGM
17. SCREED ELEVATIONS
18. PARAPET DETAILS
19. PARAPET END DETAIL
20. APPROACH SLAB DRAI
21. REINFORCING STEEL


DGN File: N:\Projects\4433.04\Sheet.Files\Structures\F-16W\4433.f-16w-01.sht1.dgn
05-MAY-2005

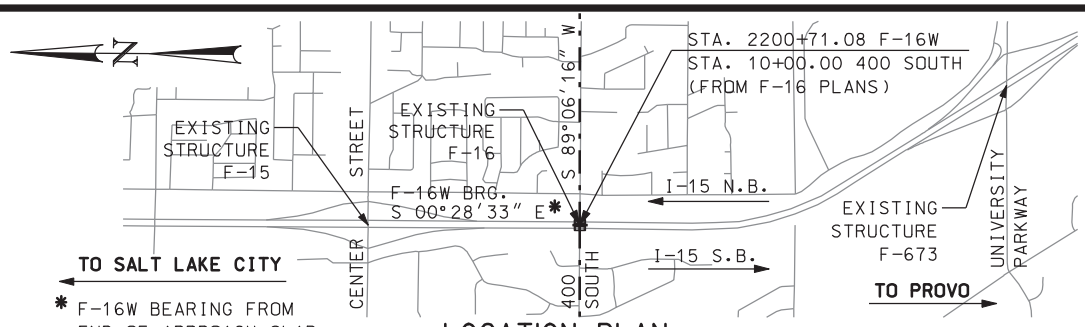


* F-16W BEARING FROM END OF APPROACH SLAB TO END OF APPROACH SLAB

## LOCATION PLAN

## GENERAL NOTES

1. USE COATED DEFORMED-BILLET REINFORCING STEEL BARS CONFORMING TO AASHTO M 284 OR M111 AND M 31 GRADE 60 RESPECTIVELY.
2. USE STRUCTURAL STEEL CONFORMING TO AASHTO M 270 GRADE 36 EXCEPT WHERE NOTED OTHERWISE.
3. CHAMFER ALL EXPOSED CONCRETE CORNERS ¾" EXCEPT WHERE NOTED OTHERWISE.
4. PROVIDE 2" CONCRETE COVER TO REINFORCING STEEL EXCEPT WHERE NOTED OTHERWISE
5. USE CLASS AA(AE) CAST-IN-PLACE CONCRETE EXCEPT WHERE SPECIFIED OTHERWISE.
6. ALL DECK, APPROACH SLAB AND PROFILE GRADE ELEVATIONS ARE AT TOP OF CONCRETE.
7. LINE F-16W IS OBTAINED BY CREATING A LINE CONNECTING TWO POINTS EACH LOCATED ALONG THE CENTERLINE BEARING ABUTMENT #1 AND #4 RESPECTIVELY THAT ARE EQUIDISTANT FROM THE CENTERLINE OF THE SBL AND NBL INTERIOR MOST EXISTING BEAMS.
8. CONTRACTOR WILL VERIFY RELATIVE ELEVATION DIFFERENCES BETWEEN F-16 AND F-16W AT BOTTOM OF NBL AND SBL INTERIOR MOST EXISTING BEAMS AT FRONT FACE OF ABUTMENT #1, SEE "ABUTMENT DETAILS" SHEET. IF THE RELATIVE ELEVATION DIFFERENCES VARY BY MORE THAN ± 1", CONTRACTOR WILL ADJUST ALL PLAN ELEVATIONS ACCORDINGLY AND SUBMIT TO THE ENGINEER FOR APPROVAL BEFORE MAKING ANY ADJUSTMENTS IN THE FIELD.
9. ALL NEW SUBSTRUCTURE ELEMENTS ARE DESIGNED TO MATCH LOCATION AND DIRECTION OF EXISTING ELEMENTS. FIELD VERIFY ALL CONTROLLING DIMENSIONS PRIOR TO CONSTRUCTION AND FABRICATION OF ANY MATERIALS. REPORT ANY DISCREPANCY BETWEEN THESE PLANS AND THE EXISTING STRUCTURE TO THE ENGINEER. DO NOT CONSTRUCT OR FABRICATE ANY ELEMENTS UNTIL THE DISCREPANCIES ARE RESOLVED. ALL STRUCTURE GEOMETRY IS BASED ON LOCAL SURVEY CONTROL POINTS SHOWN ON THE FOUNDATION PLAN. THE I-15 STATIONING AND ALIGNMENT IS FOR INFORMATION ONLY.
10. UTILITIES DESIGNATED AS "RELOCATE" ARE THE DESIGN-BUILD RESPONSIBILITY OF THE CONTRACTOR. REFER TO UTILITY RELOCATION (DESIGN-BUILD) SPECIFICATION 000728S.
11. SEE UT-14 FOR FURTHER INFORMATION.

## DESIGN DATA

HL-93 IN ACCORDANCE WITH CURRENT AASHTO LRFD BRIDGE DESIGN SPECIFICATIONS AND INTERIM SPECIFICATIONS.

SEISMIC DESIGN PER NCHRP 12-49.

INVENTORY AND OPERATING RATINGS FOR HS20-44 ARE IN ACCORDANCE WITH THE AASHTO MANUAL FOR CONDITION ELEVATION OF BRIDGES, 2nd EDITION, AND THE 2001 AND 2003 INTERIM SPECIFICATIONS LOAD FACTOR METHOD. INVENTORY AND OPERATING RATINGS FOR HL-93 ARE IN ACCORDANCE WITH THE GUIDE MANUAL FOR CONDITION EVALUATION AND LOAD RESISTANCE FACTOR RATING (LRFR) OF HIGHWAY BRIDGES.

| | | OPERATING RATING | INVENTORY RATING |
|---|---|---|---|
| EXISTING BEAMS: * | (HS-20) | 2.90 (MOMENT - SPAN 2) | 1.53 (TENSILE STRESS - SPAN 2) |
| | (HL-93) | 1.80 (MOMENT - SPAN 2) | 1.24 (TENSILE STRESS - SPAN 2) |
| NEW BEAMS: | (HL-93) | 1.38 (MOMENT SPANS - 1 & 3) | 1.06 (MOMENT - SPANS 1 & 3) |

* EXISTING BEAMS ARE RATED AS SIMPLE SPANS.

| | |
|---|---|
| CAST-IN-PLACE CONCRETE: CLASS AA (AE) | $f'c$ = 4000 PSI; $f$y (REINF.) = 60,000 PSI; $n$ = 8 |
| PRESTRESSED CONCRETE: | $f'c$ = 5000 PSI; $f$y (NON-PRESTRESSED) = 60,000 PSI; $n$ = 7 |
| STRUCTURAL STEEL: | $f$y = 36,000 PSI |
| WEARING SURFACE: | ½" CONCRETE; 3" ASPHALT; FUTURE = 0 PSF |
| DESIGN SPEED: | 70 M.P.H |
| SEISMIC: | SEISMIC DESIGN PARAMETERS (500 YR. RETURN PERIOD, 10% PE IN 50 YR.)<br>Ss = MAX. CONSIDERED EQ GROUND MOTION AT 0.2s = 0.43g<br>S1 = MAX. CONSIDERED EQ GROUND MOTION AT 1.0s = 0.14g<br>SITE CLASS D |

## QUANTITIES

| ITEM | ESTIM. | UNIT | AS CONST. |
|---|---|---|---|
| GRANULAR BACKFILL BORROW (PLAN QUANTITY) | 44 | CU.YD. | |
| PILE DRIVING EQUIPMENT | 1 | LUMP | |
| DRIVEN PILES 12-3/4 INCH | 1840 | FT. | |
| DYNAMIC PILE TESTING | 6 | EACH | |
| REINFORCING STEEL - COATED | 76,966 | LBS. | |
| PREPARE BRIDGE FOR WIDENING | 1 | LUMP | |
| STRUCTURAL CONCRETE (EST. LUMP QTY: 381 CU. YD.) | 1 | LUMP | |
| PRESTRESSED CONCRETE MEMBER (37'-6 TYPE I SPECIALTY ITEM) | 4 | EACH | |
| PRESTRESSED CONCRETE MEMBER (36'-3 TYPE I SPECIALTY ITEM) | 8 | EACH | |
| STRUCTURAL STEEL (EST. LUMP QTY: 546 LB.) | 1 | LUMP | |

REVISIONS

| NO. | DATE | BY | REMARKS |
|---|---|---|---|

UTAH DEPARTMENT OF TRANSPORTATION
SALT LAKE CITY, UTAH
STRUCTURES DIVISION

DESIGN MDR 12/04 CHECK GG 12/04
DRAWN LM 12/04 CHECK MDR 12/04
QUANT. MDR 12/04 CHECK LM 12/04

APPROVAL RECOMM. DATE SENIOR DESIGN ENGR.
APPROVED FOR USE BY UDOT DATE UDOT BRIDGE ENGR.

I-15; CORRIDOR IN UTAH COUNTY
400 SOUTH OVERPASS IN OREM
SITUATION AND LAYOUT I

PROJECT NUMBER SP-15-6(52)241

UTAH
COUNTY

F-16W
DRG. NO.

SHT. 1 OF 21

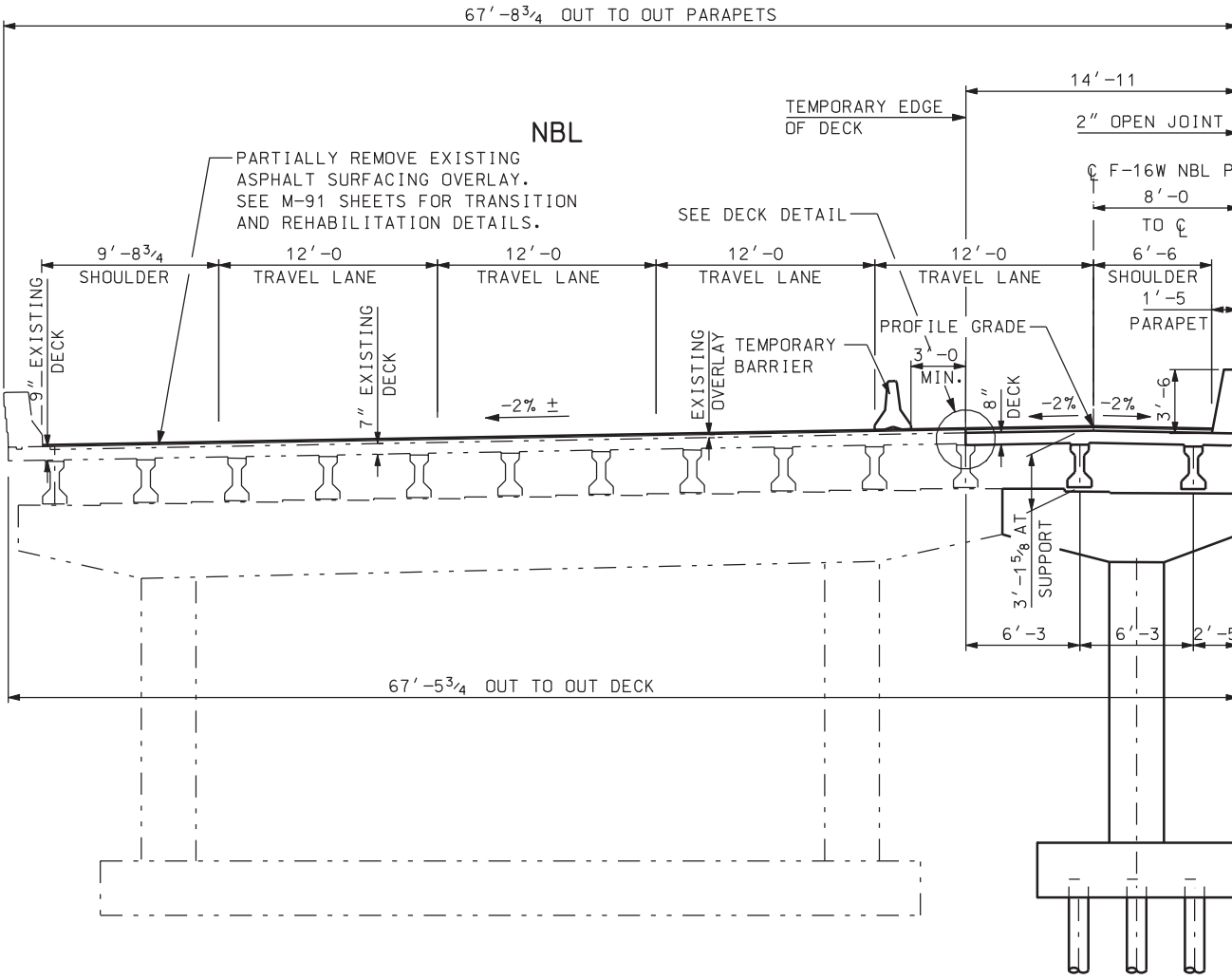


TYPICAL SECTION

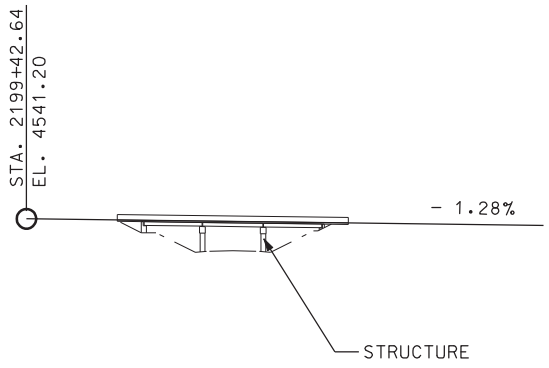


F-16W S.B.L. AND N.B.L. PROFILE

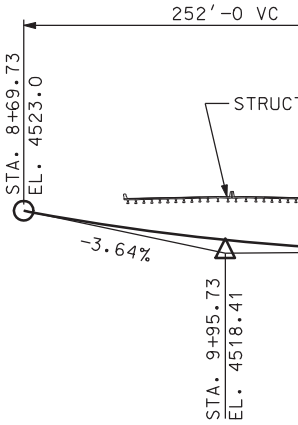


400 SOUTH

DGN File: N:\Projects\4433.04\Sheet.Files\Structures\F-16W\4433.f-16w-02.sht2.dgn

05-MAY-2005

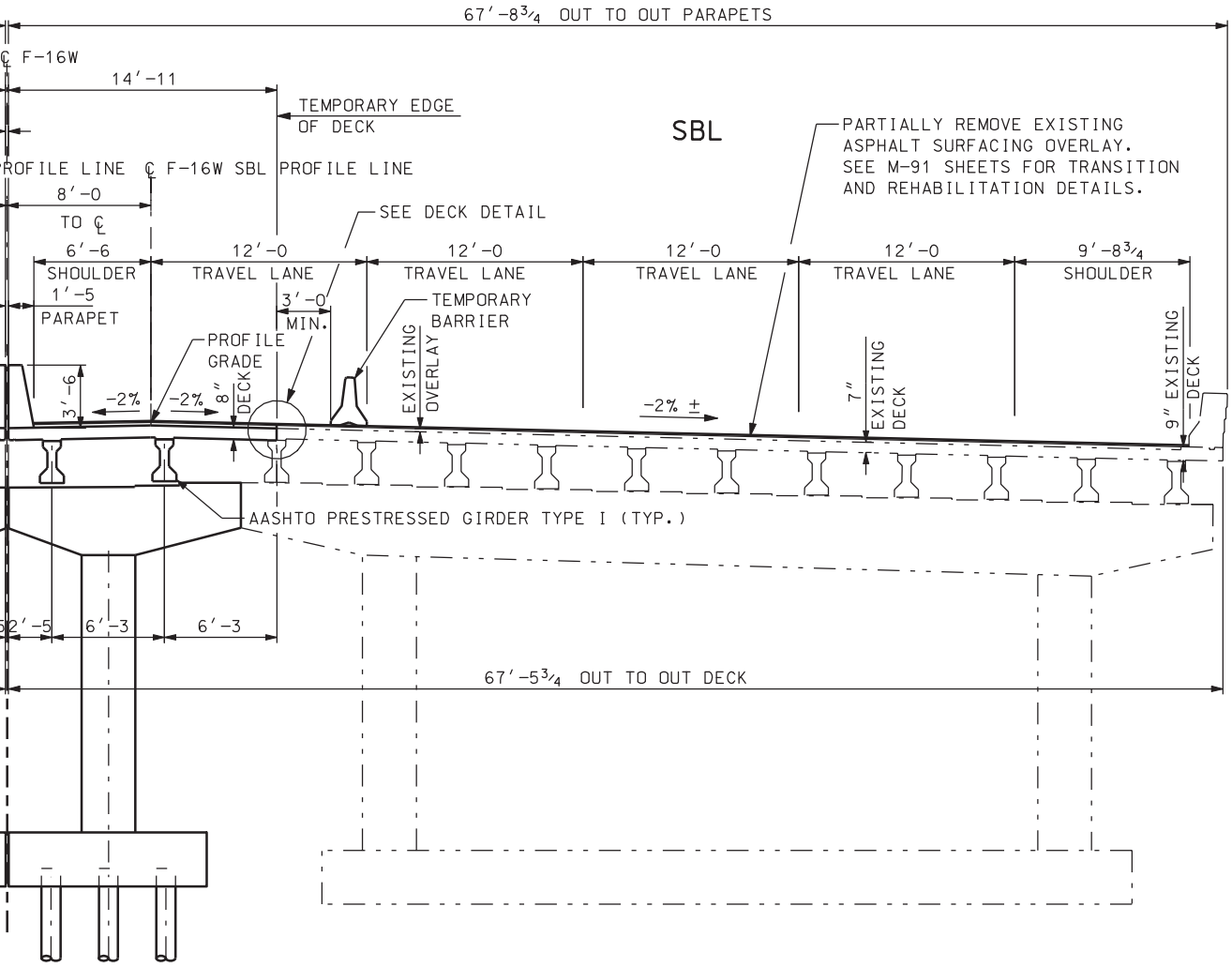


THRU STRUCTURE

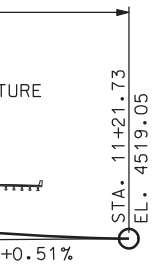


PROFILE

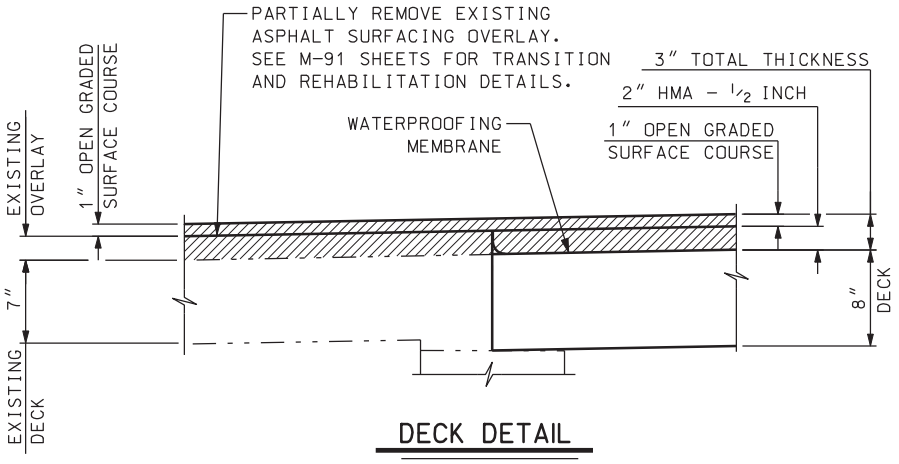


DECK DETAIL

## NOTES:

1. ALL DECK, APPROACH SLAB AND PROFILE GRADE ELEVATIONS ARE AT TOP OF CONCRETE.
2. SEE REHABILITATION PLANS FOR FURTHER INFORMATION.
3. SEE SPECIAL PROVISION "PREPARE BRIDGE FOR WIDENING" FOR FURTHER INSTRUCTIONS.

| NO. | DATE | BY | REMARKS |
|---|---|---|---|

REVISIONS

UTAH DEPARTMENT OF TRANSPORTATION
SALT LAKE CITY, UTAH
STRUCTURES DIVISION

DESIGN MDR 12/04 CHECK GG 12/04
DRAWN LM 12/04 CHECK MDR 12/04
QUANT. MDR 12/04 CHECK LM 12/04

APPROVAL RECOMM. DATE SENIOR DESIGN ENGR.
APPROVED FOR USE BY UDOT DATE UDOT BRIDGE ENGR.

I-15: CORRIDOR IN UTAH COUNTY
400 SOUTH OVERPASS IN OREM
SITUATION AND LAYOUT II

PROJECT NUMBER SP-15-6(52)241

UTAH
COUNTY

F-16W
DRG. NO.

SHT. 2 OF 21

# DRILL HOLE LOG

## BORING NO. 04-1

Sheet: 1 of 1

PROJECT: I-15, CORRIDOR IN UTAH COUNTY - STRUCTURE F16 PROJECT NO.: 200401.045
CLIENT: UTAH DEPARTMENT OF TRANSPORTATION DATE: 8/4/04
LOCATION: SEE SITE PLAN: N ~78300, E ~212075 ELEVATION: ~4519.3'
DRILLER: D. SAMPSON, A. HARTVIGSEN LOGGED BY: M.H., V.N.B.
EQUIP./DRILL METHOD: CME-55 / N.W. CASING
DEPTH TO WATER - INITIAL: ▽ 5.3' AFTER 24 HOURS: ▽ NOT MEASURED

| Elev. (Feet) | Depth (Feet) | Lithology | Sample Type | Rec. (In.) | Blows Per 6" & Torvane (tsf) | USCS (AASHTO) | Material Description | | Dry Density, pcf | Moisture Content, % | Atter. Liquid Limit, % | Atter. Plasticity Index, % | Gradation Gravel, % | Gradation Sand, % | Gradation Silt/Clay, % | Other Tests |
|---|---|---|---|---|---|---|---|---|---|---|---|---|---|---|---|---|
| | | | | 14 | 4,5,7 | SM | brown, moist, loose | VERY SILTY FINE SAND | | | | | | | | |
| 4515 | 5 | | | 18 | 1,1,2 | SM,ML,CL | brown, wet, very loose to very soft | INTERBEDDED LAYERS OF SILTY SAND, SILT & LEAN CLAY 0.5" THICK | | | | | | | | |
| 4510 | 10 | | | 18 | Pushed 0.55 | CL (A-7-5(11)) | lt. brown, moist, stiff | LEAN CLAY W/SILTY SAND LENSES | 85.6 | 43.8 | 41 | 18 | 0 | 2 | 98 | UC |
| 4505 | 15 | | | 18 | 2,2,6 0.34 | CL,SM | lt. brown, wet, loose | LAYERS OF SILTY SAND & LEAN CLAY 2" TO 3" THICK | | | | | | | | |
| | | | | | | SM | | SILTY SAND | | | | | | | | |
| 4500 | 20 | | | 18 | Pushed 0.64 | CL (A-4(8)) | lt. gray-brown, moist to wet, firm | LEAN CLAY W/SILT & SAND LENSES | 90.1 | 23.9 | 27 | 7 | 0 | 2 | 98 | UC |
| 4495 | 25 | | | 18 | 6,16,20 | SM | brown, wet, dense | SILTY SAND | | | | | | | | |
| 4490 | 30 | | | 15 | 11,19,16 | SM | lt. brown, wet, dense | | | | | | | | | |
| 4485 | | | | | | | lt. brown | LAYERED SILTY SAND & LEAN CLAY ~3" THICK | | | | | | | | |
| | 35 | | | 17 | Pushed 0.70 | CL (A-4(8)) | lt. brown, wet, stiff | LEAN CLAY | 95.7 | 26.4 | 32 | 10 | 0 | 2 | 98 | UC CT |
| 4480 | 40 | | | 14 | 13,21,21 | SM | lt. brown, wet, dense | SILTY SAND | | | | | | | | |
| 4475 | 45 | | | 15 | 11,18,19 | SM | lt. brown, wet, dense | | | | | | | | | |
| 4470 | 50 | | | 18 | Pushed 0.55 | CL (A-6(11) | gray, wet, stiff | LEAN CLAY | 92.6 | 31.1 | 38 | 16 | 0 | 2 | 98 | UC CT |
| 4465 | 55 | | | 18 | 18,29,30 | SM (A-3) | gray, wet, very dense | | | 19.0 | | NP | 0 | 86 | 14 | DS |
| 4460 | 60 | | | 18 | 15,29,49 | SM | gray, wet, very dense | SILTY SAND | | | | | | | | |
| 4455 | 65 | | | 14 | 19,23,23 | SM (A-3) | gray, wet, dense | | | 31.4 | | NP | 0 | 77 | 23 | |
| 4450 | 70 | | | 13 | 19,24,27 | SM | gray, wet, very dense | | | | | | | | | |

N.B.L. ←
S.B.L. →

DGN File: N:\Projects\4433.04\Sheet.Files\Structures\F-16W\4433.f-16w-03.soildata.dgn

05-MAY-2005

# KEY TO BORING LOG

## SYMBOLS

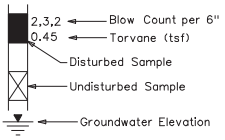


UC = Unconfined Compression Test
CT = Consolidation Test
SG = Specific Gravity Test
DS = Direct Shear Test

## RELATIVE DENSITY (NON-PLASTIC - SAND & SILT)

VERY LOOSE N<4
LOOSE N 4-10
MED DENSE N 10-30
DENSE N 30-50
VERY DENSE N>50

## CONSISTENCY (PLASTIC - SILT & CLAY)

VERY SOFT N<2
SOFT N 2-4
MEDIUM STIFF N 4-8
STIFF N 8-15
VERY STIFF N 15-30
HARD N>30

## GENERAL NOTES

1. THE SUBSURFACE EXPLORATIONS SHOWN WERE CONDUCTED BETWEEN 08-04-04 AND 08-04-04 BY RB&G ENGINEERING, INC..
2. THESE BORING LOGS REPRESENT A SYNOPSIS OF THE SOIL DEPOSITS ENCOUNTERED WITHIN EACH BORING AND ARE BASED ON SOUND GEOLOGICAL AND ENGINEERING JUDGMENT. BECAUSE SOIL IS A COMPLEX MEDIUM, THESE BORING LOGS MAY OR MAY NOT REPRESENT THE SOIL CONDITIONS AT THIS SITE. THIS SUBSURFACE INTERPRETATION IS PRESENTED IN GOOD FAITH AND IS NOT INTENDED AS A SUBSTITUTE FOR PERSONAL INVESTIGATION AND JUDGEMENT OF THE CONTRACTOR.
3. THE WATER LEVELS AND CONDITIONS INDICATED ON THE BORING LOGS REPRESENT HOLE CONDITIONS ON THE DATE SHOWN, HOWEVER, IT SHOULD BE NOTED, THAT AT LOCATIONS AWAY FROM THE BORINGS OR AT ANOTHER TIME THE WATER LEVELS AND CONDITIONS MAY VARY SIGNIFICANTLY.
4. THE STRATIFICATION LINES REPRESENT THE APPROXIMATE BOUNDARIES BETWEEN SOIL TYPES AND THE TRANSITION MAY BE GRADUAL.
5. COBBLE - A ROCK WITH AN AVERAGE DIMENSION BETWEEN 3 INCHES AND 12 INCHES
6. BOULDER - A ROCK WITH AN AVERAGE DIMENSION OF 12 INCHES OR GREATER

NOTE: DRILL RIG USED - CME 55
HAMMER E=0.75

GEOTECHNICAL ENGINEER

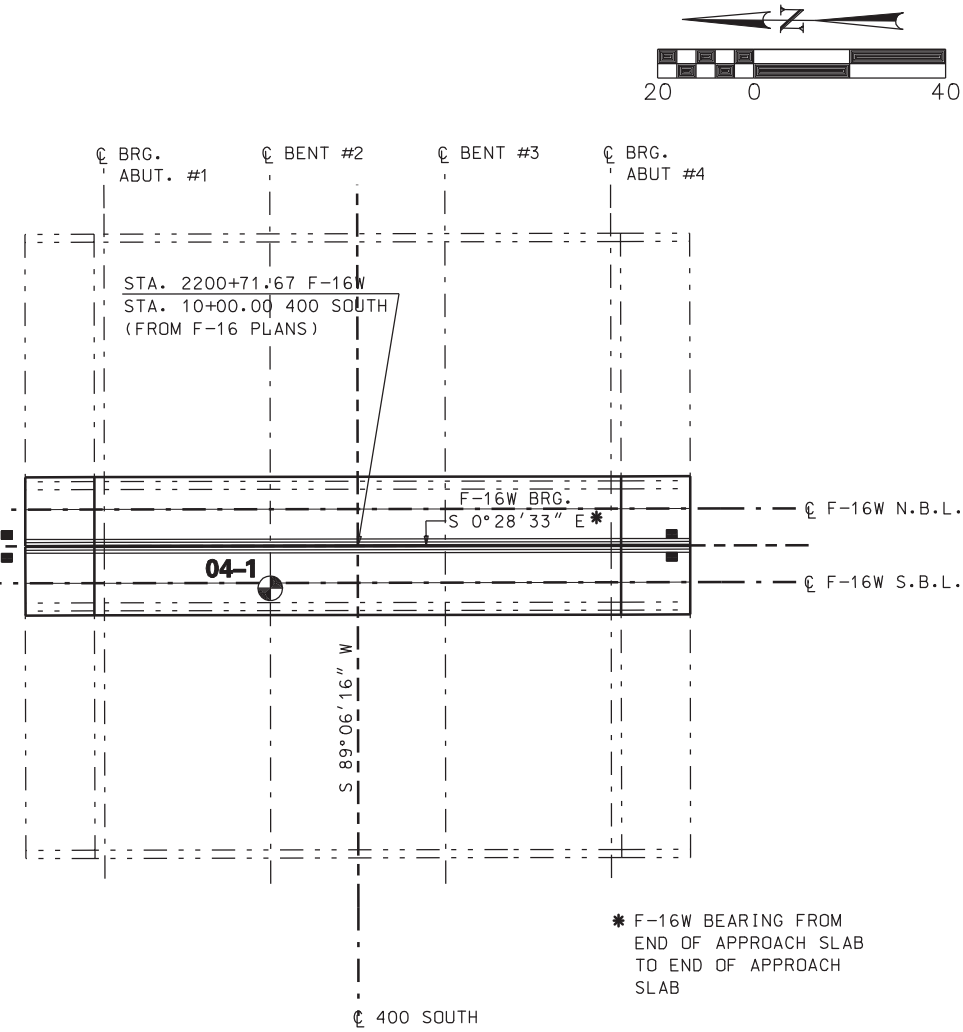


LOCATION PLAN

| NO. | DATE | BY | REMARKS |
|---|---|---|---|
| | | | |

REVISIONS

UTAH DEPARTMENT OF TRANSPORTATION
SALT LAKE CITY, UTAH
STRUCTURES DIVISION
RB&G ENGINEERING INC.

DESIGN BEP 10/04 CHECK
DRAWN JPN 10/04 CHECK
QUANT. CHECK

APPROVAL RECOMM. DATE SENIOR DESIGN ENGR.
APPROVED FOR USE BY UDOT DATE UDOT BRIDGE ENGR.

I-15: CORRIDOR IN UTAH COUNTY
400 SOUTH OVERPASS IN OREM
SOIL DATA SHEET
PROJECT NUMBER SP-15-6(52)241

UTAH
COUNTY

F-16W
DRG. NO.

SHT. 3 OF 21

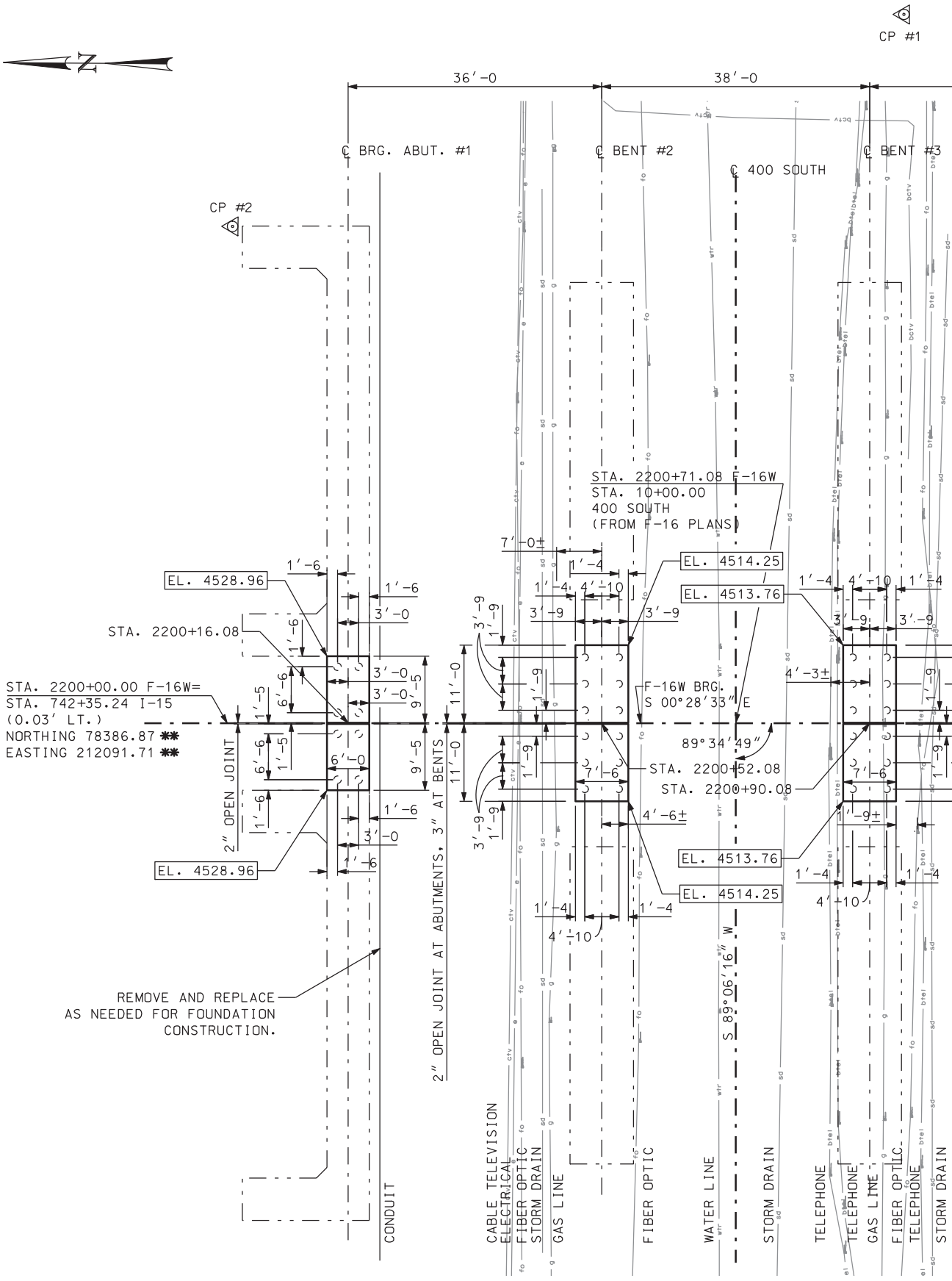


** NORTHING AND EASTING ARE GIVEN ONLY FOR VERIFICATION OF LINE F-16W. THEY ARE NOT INTENDED TO BE USED TO LOCATE LINE F-16W. SEE SHEET 1 GENERAL NOTES FOR INSTRUCTIONS OF HOW TO OBTAIN LINE F-16W.

## FOUNDATION PLAN

* F-16W BE
OF APPRO
END OF A

DGN File: N:\Projects\4433.04\Sheet.Files\Structures\F-16W\4433.f-16w-04.foundation.dgn

05-MAY-2005

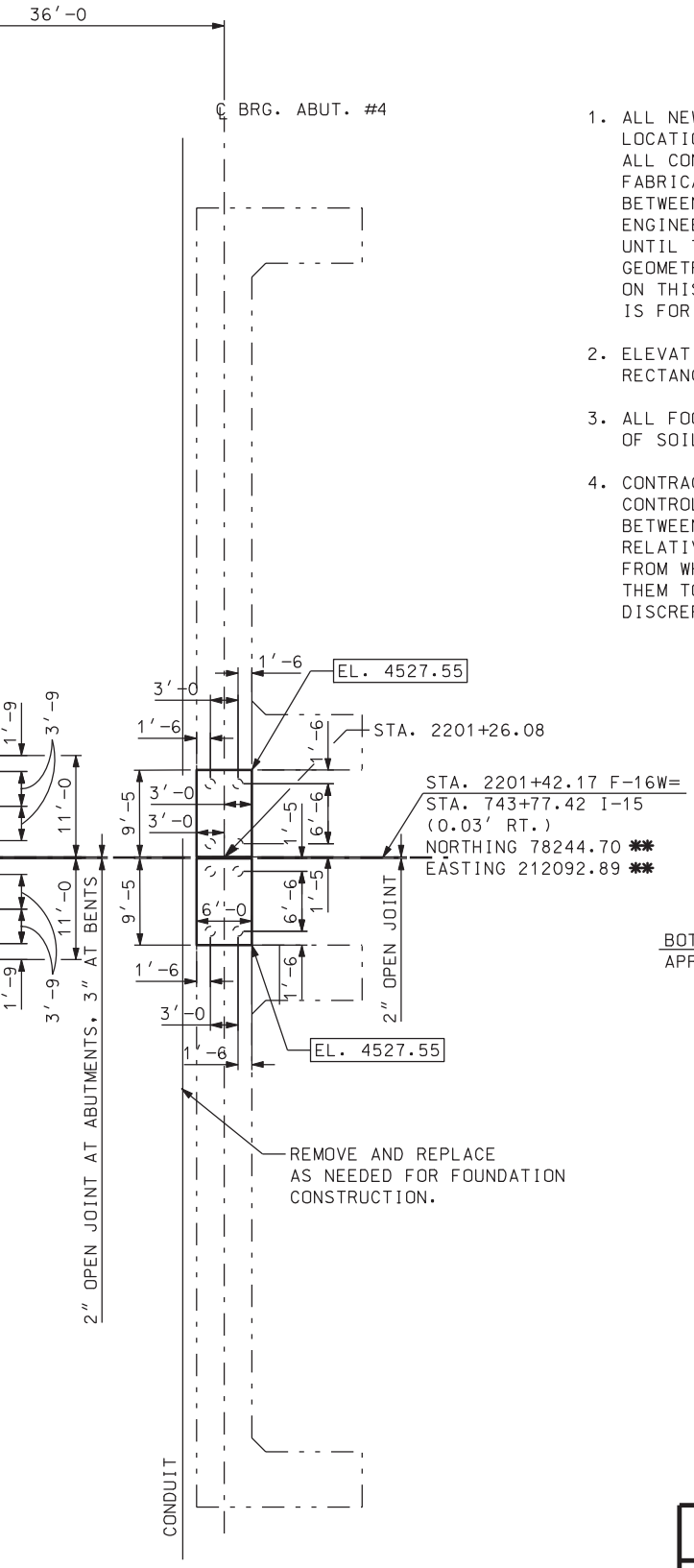


## NOTES:

1. ALL NEW SUBSTRUCTURE ELEMENTS ARE DESIGNED TO MATCH LOCATION AND DIRECTION OF EXISTING ELEMENTS. FIELD VERIFY ALL CONTROLLING DIMENSIONS PRIOR TO CONSTRUCTION AND FABRICATION OF ANY MATERIALS. REPORT ANY DISCREPANCY BETWEEN THESE PLANS AND THE EXISTING STRUCTURE TO THE ENGINEER. DO NOT CONSTRUCT OR FABRICATE ANY ELEMENTS UNTIL THE DISCREPANCIES ARE RESOLVED. ALL STRUCTURE GEOMETRY IS BASED ON LOCAL SURVEY CONTROL POINTS SHOWN ON THIS SHEET. THE I-15 STATIONING AND ALIGNMENT IS FOR INFORMATION ONLY.

2. ELEVATIONS AT THE BOTTOM OF FOOTING ARE SHOWN IN RECTANGLES, E.G. EL. 0000.00

3. ALL FOOTINGS WILL BE COVERED WITH A MINIMUM DEPTH OF SOIL OF 2'-0.

4. CONTRACTOR WILL FIELD VERIFY NORTHING AND EASTING OF ALL CONTROL POINTS AS WELL AS THE RELATIVE ELEVATION DIFFERENCES BETWEEN ALL CONTROL POINTS. IF THE NORTHING, EASTING OR RELATIVE ELEVATION DIFFERENCES VARY BY MORE THAN ± 1" FROM WHAT IS GIVEN ON THIS SHEET, CONTRACTOR WILL REPORT THEM TO THE ENGINEER AND STOP ALL CONSTRUCTION UNTIL DISCREPANCIES ARE RESOLVED.

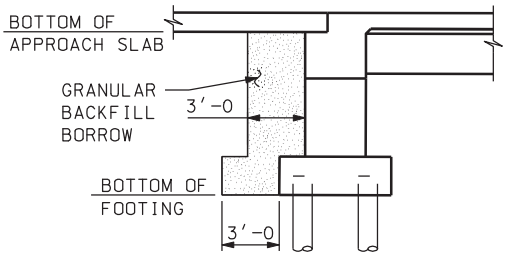


## LIMITS OF GRANULAR BACKFILL BORROW AT ABUTMENTS

(ABUT. #1 SHOWN; ABUT. #4 SAME BY OPPOSITE HAND)

| CONTROL POINT DATA | | | |
|---|---|---|---|
| NUMBER | NORTHING | EASTING | ELEVATION |
| 1 | 78293.56 | 212253.03 | 4524.85 |
| 2 | 78387.90 | 212162.03 | 4539.26 |
| 3 | 78336.99 | 211911.73 | 4517.50 |

| NO. | DATE | BY | REMARKS |
|---|---|---|---|
| | | | |

REVISIONS

UTAH DEPARTMENT OF TRANSPORTATION
SALT LAKE CITY, UTAH
STRUCTURES DIVISION

DESIGN MDR 12/04 CHECK GG 12/04
DRAWN LM 12/04 CHECK MDR 12/04
QUANT. MDR 12/04 CHECK LM 12/04

APPROVAL RECOMM. DATE SENIOR DESIGN ENGR.
APPROVED FOR USE BY UDOT DATE UDOT BRIDGE ENGR.

I-15: CORRIDOR IN UTAH COUNTY
400 SOUTH OVERPASS IN OREM
FOUNDATION PLAN

PROJECT NUMBER SP-15-6(52)241

UTAH
COUNTY

F-16W
DRG. NO.

SHT. 4 OF 21

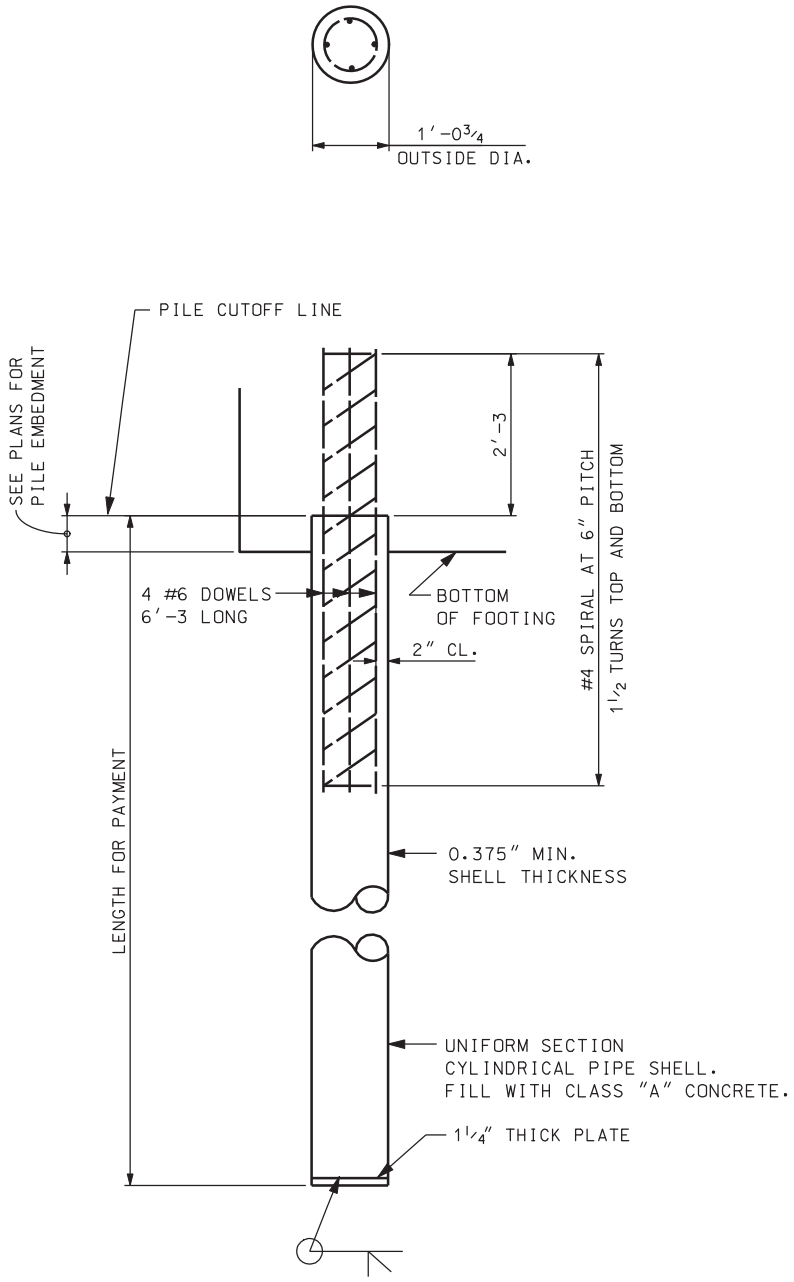


PIPE PILE DETAIL

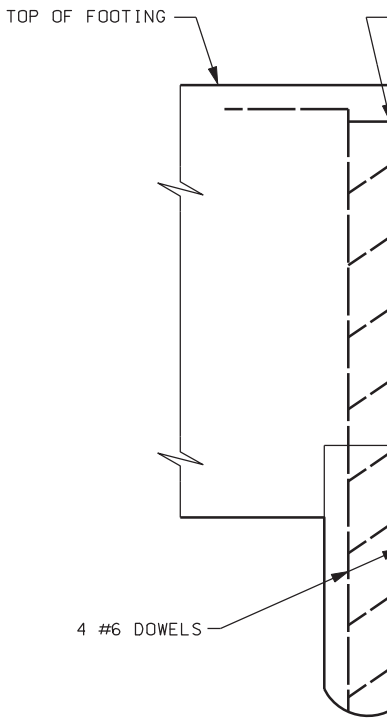


DOWEL

WHEN DEPTH OF CONCR
LINE IS LESS THAN 2′-

| LOCATION | ESTIMATED PILE TIP. ELEV. (FEET) | ELEV. OF MIN. ACCEPTABLE PILE PENETRATION (FEET) |
|---|---|---|
| ABUT. #1 | 4474.96 | 4477 |
| BENT #2 | 4475.25 | 4477 |
| BENT #3 | 4474.76 | 4477 |
| ABUT. #4 | 4473.55 | 4477 |

SERVICE I PILE RESISTANC

DGN File:N:\Projects\4433.04\Sheet.Files\Structures\F-16W\4433.f-16w-05.piledetail.dgn
05-MAY-2005

1½ TURNS

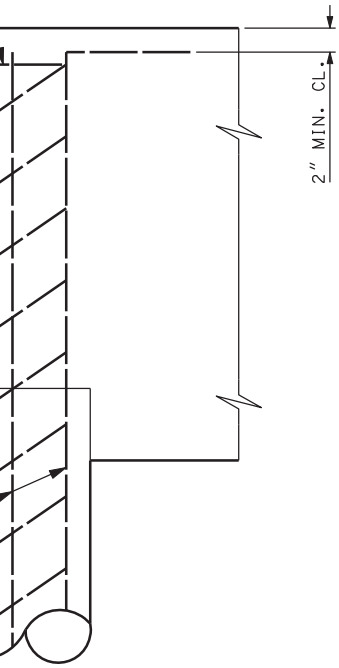


DETAIL

ETE ABOVE PILE CUTOFF
5 BEND DOWELS AS SHOWN.

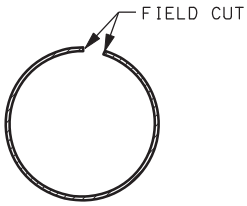


NOTE:
FIELD CUT PIECE OF PILE SO WHEN COMPRESSED IT WILL SLIDE INSIDE PILE SECTIONS.

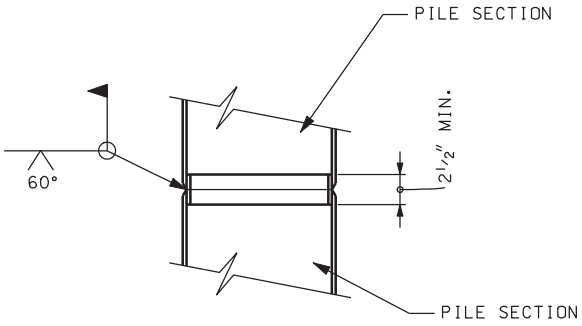


## SPLICE DETAIL

SPLICES SHALL BE FULL STRENGTH WELDED SPLICES.

| PILE DATA | | | | |
|---|---|---|---|---|
| | SERVICE I PILE RESISTANCE (KIPS) | STRENGTH I PILE RESISTANCE (KIPS) | REQUIRED DRIVING RESISTANCE (KIPS) | AS CONST. PILE TIP ELEV. (FEET) |
| | 215 | 110 | 224 | |
| | 135 | 106 | 224 | |
| | 135 | 106 | 224 | |
| | 215 | 110 | 224 | |

E IS BASED ON 1" OF SETTLEMENT.

## NOTES:

1. FILL PILE SHELLS WITH CLASS "A" CONCRETE.
2. HOLD REINFORCING STEEL ADEQUATELY IN FINAL POSITION DURING PLACEMENT OF CONCRETE AROUND BARS.
3. USE A PILE HAMMER WITH A MINIMUM RATED ENERGY OF 25 KIP-FEET.
4. USE PILES MEETING ASTM A252 GRADE 3 WITH A MINIMUM YIELD STRENGTH OF 45 ksi.

| NO. | DATE | BY | REMARKS |
|---|---|---|---|

REVISIONS

UTAH DEPARTMENT OF TRANSPORTATION
SALT LAKE CITY, UTAH
STRUCTURES DIVISION

DESIGN MDR 12/04 CHECK GG 12/04
DRAWN LM 12/04 CHECK MDR 12/04
QUANT. MDR 12/04 CHECK LM 12/04

APPROVAL RECOMM. DATE SENIOR DESIGN ENGR.
APPROVED FOR USE BY UDOT DATE UDOT BRIDGE ENGR.

I-15; CORRIDOR IN UTAH COUNTY
400 SOUTH OVERPASS IN OREM
DRIVEN PILE DETAILS

PROJECT NUMBER SP-15-6(52)241

UTAH
COUNTY

F-16W
DRG. NO.

SHT. 5 OF 21

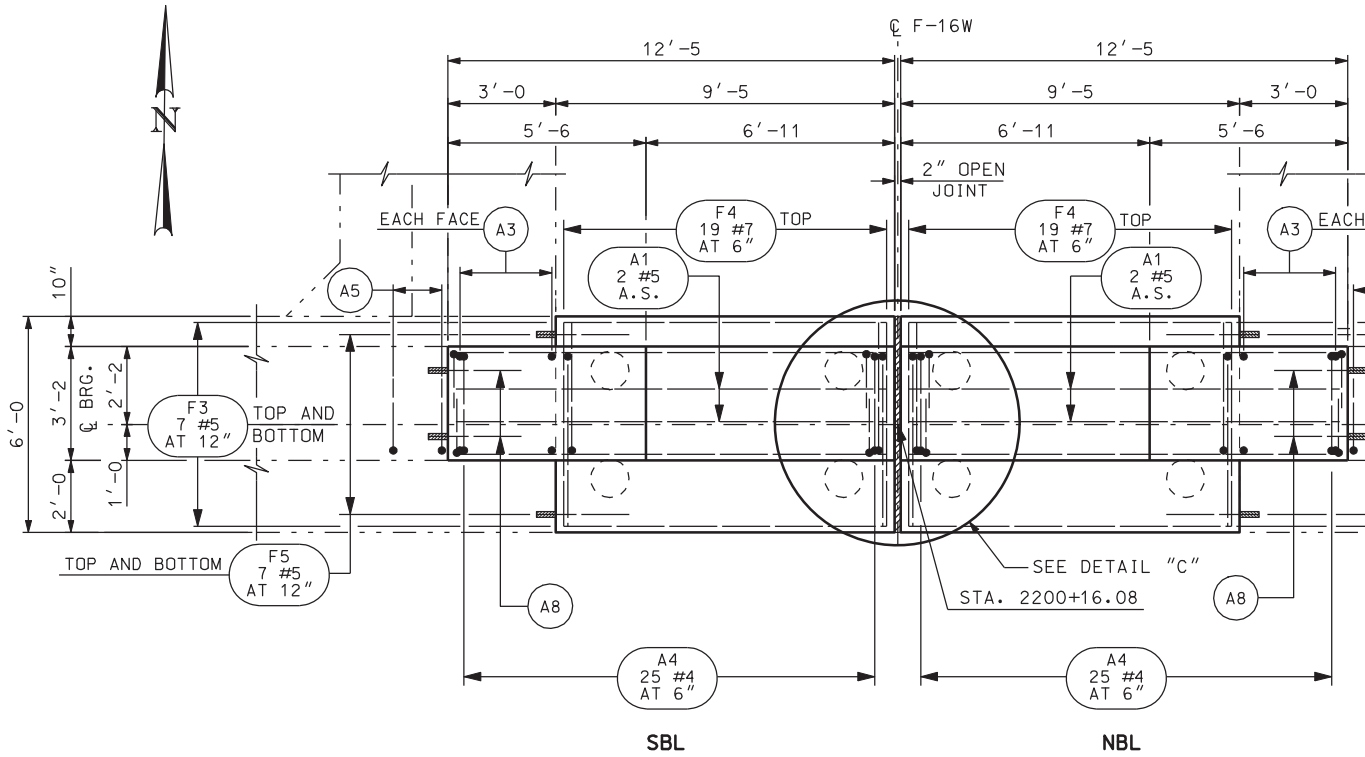


PLAN

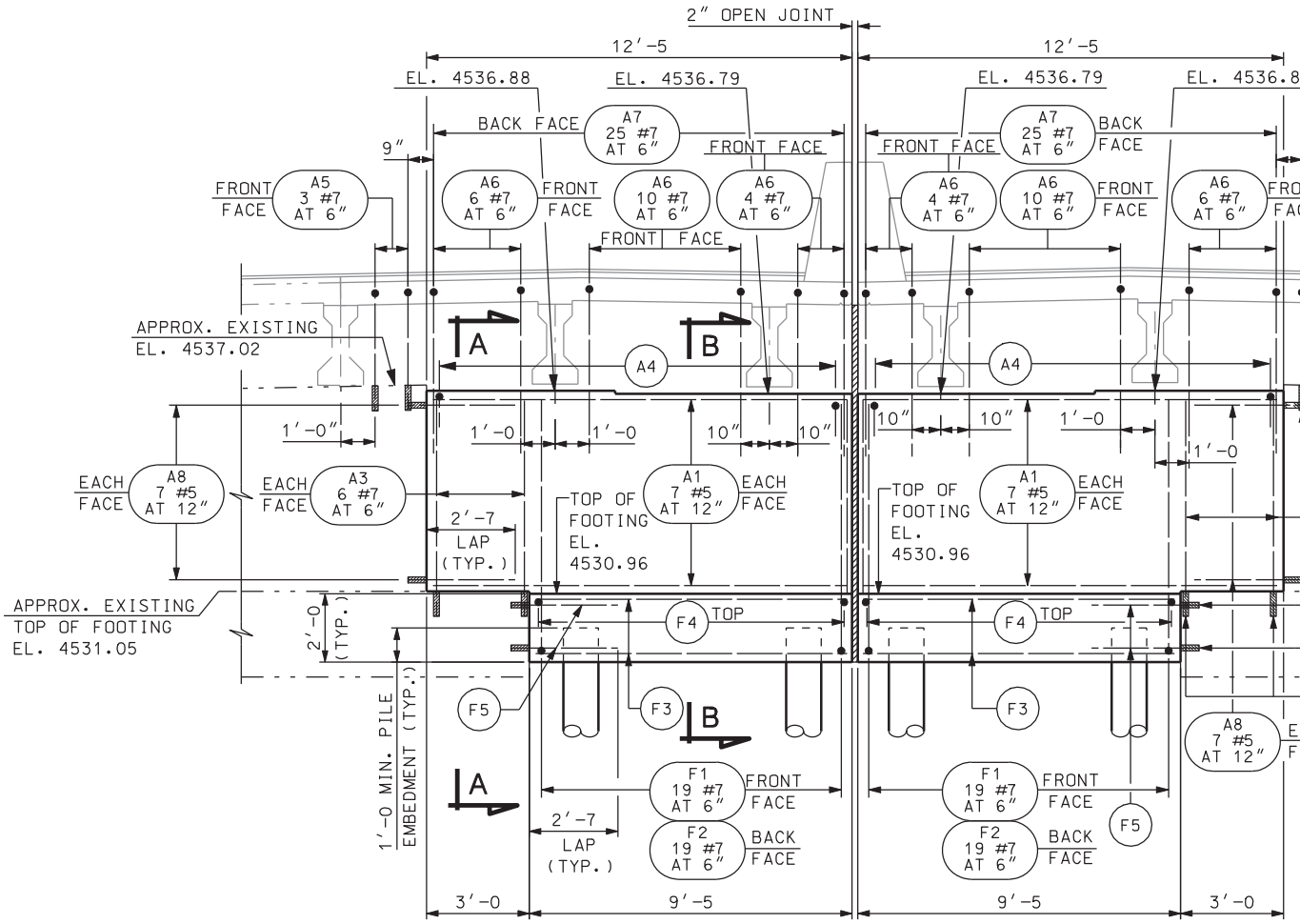


ELEVATION

DGN File: N:\Projects\4433.04\Sheet.Files\Structures\F-16W\4433.f-16w-06.abutment1.dgn
05-MAY-2005

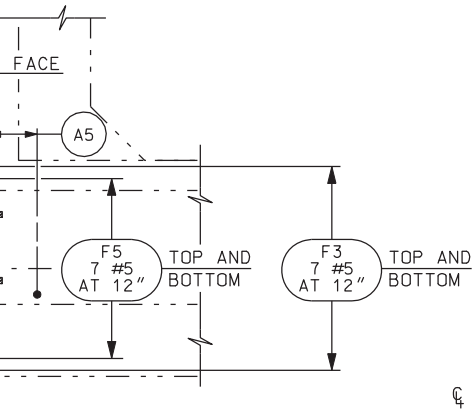


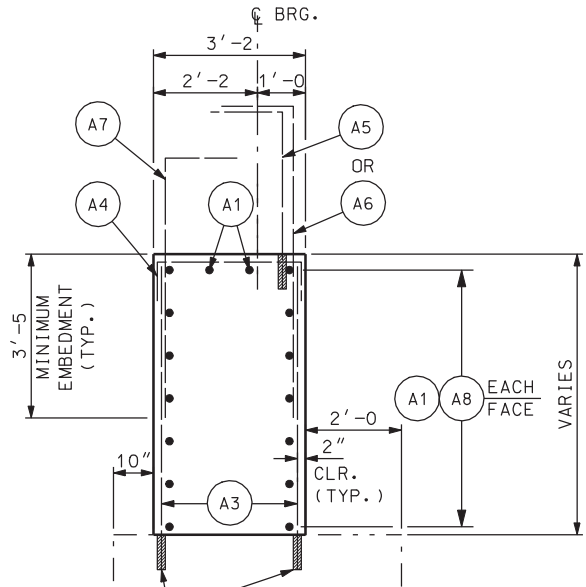


## SECTION A-A

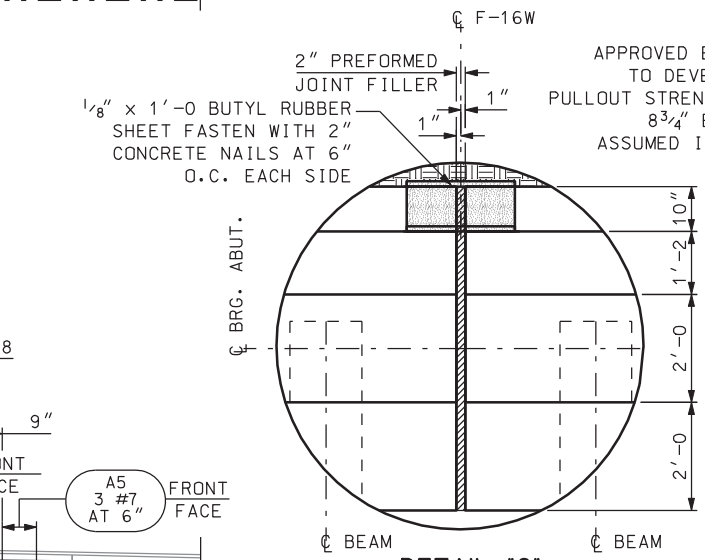


## DETAIL "C"

(USE RUBBER SHEET ON
FACES OF JOINT IN
CONTACT WITH SOIL)

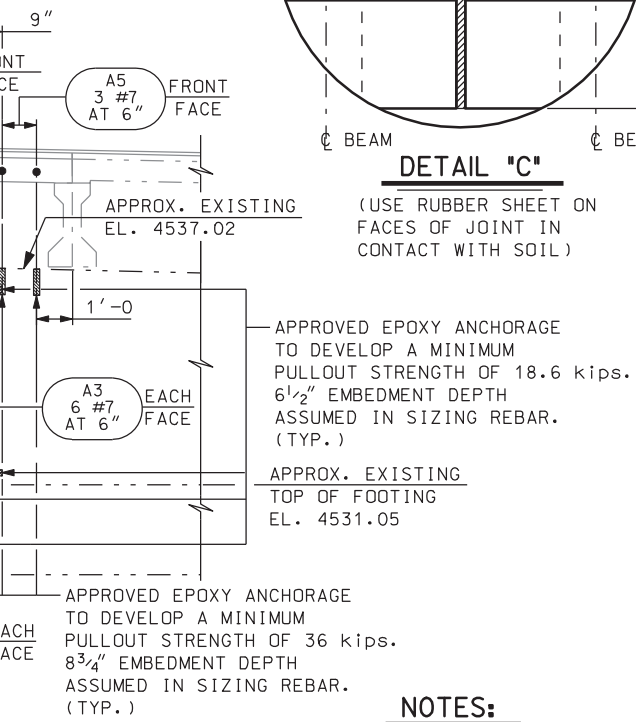


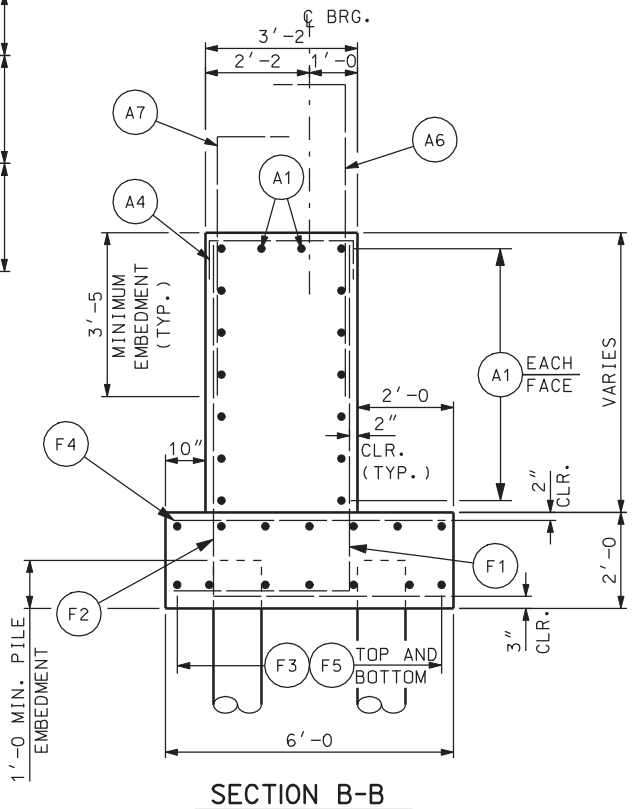


## SECTION B-B

## NOTES:

1. BAR SPACING IS THE MAXIMUM SPACING. SPACING IS ROUNDED TO THE NEAREST INCH.
2. FINISH BRIDGE SEAT BEARING AREA (2" LARGER THAN BEARING PAD) HIGH AND RUB OR GRIND LEVEL TO ELEVATION SHOWN ± ⅛". NO GROUTING ALLOWED.
3. PLACE ALL EPOXY ANCHORAGES INSIDE OF EXISTING REBAR.

## QUANTITIES

| | |
|---|---|
| STRUCTURAL CONCRETE | |
| FOOTING - NORTHBOUND | 4.2 CU. YDS. |
| FOOTING - SOUTHBOUND | 4.2 CU. YDS. |
| ABUTMENT - NORTHBOUND | 8.6 CU. YDS. |
| ABUTMENT - SOUTHBOUND | 8.6 CU. YDS. |
| TOTAL | 25.6 CU. YDS. |

| NO. | DATE | BY | REMARKS |
|---|---|---|---|
| | | | |

REVISIONS

UTAH DEPARTMENT OF TRANSPORTATION
SALT LAKE CITY, UTAH
STRUCTURES DIVISION

DESIGN MDR 12/04 CHECK GG 12/04
DRAWN LM 12/04 CHECK MDR 12/04
QUANT. MDR 12/04 CHECK LM 12/04

APPROVAL RECOMM. DATE SENIOR DESIGN ENGR.
APPROVED FOR USE BY UDOT DATE UDOT BRIDGE ENGR.

I-15: CORRIDOR IN UTAH COUNTY
400 SOUTH OVERPASS IN OREM
ABUTMENT #1 DETAILS

PROJECT NUMBER SP-15-6(52)241

UTAH
COUNTY

F-16W
DRG. NO.

SHT. 6 OF 21

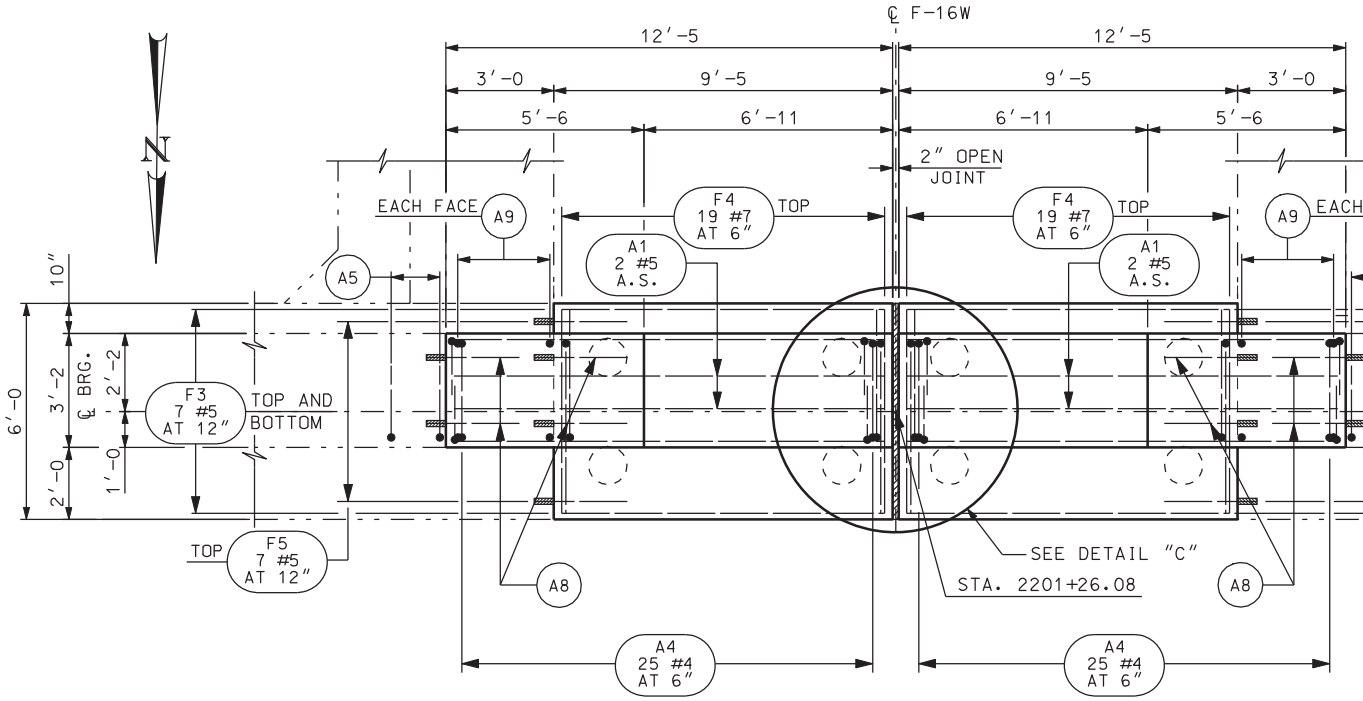


PLAN

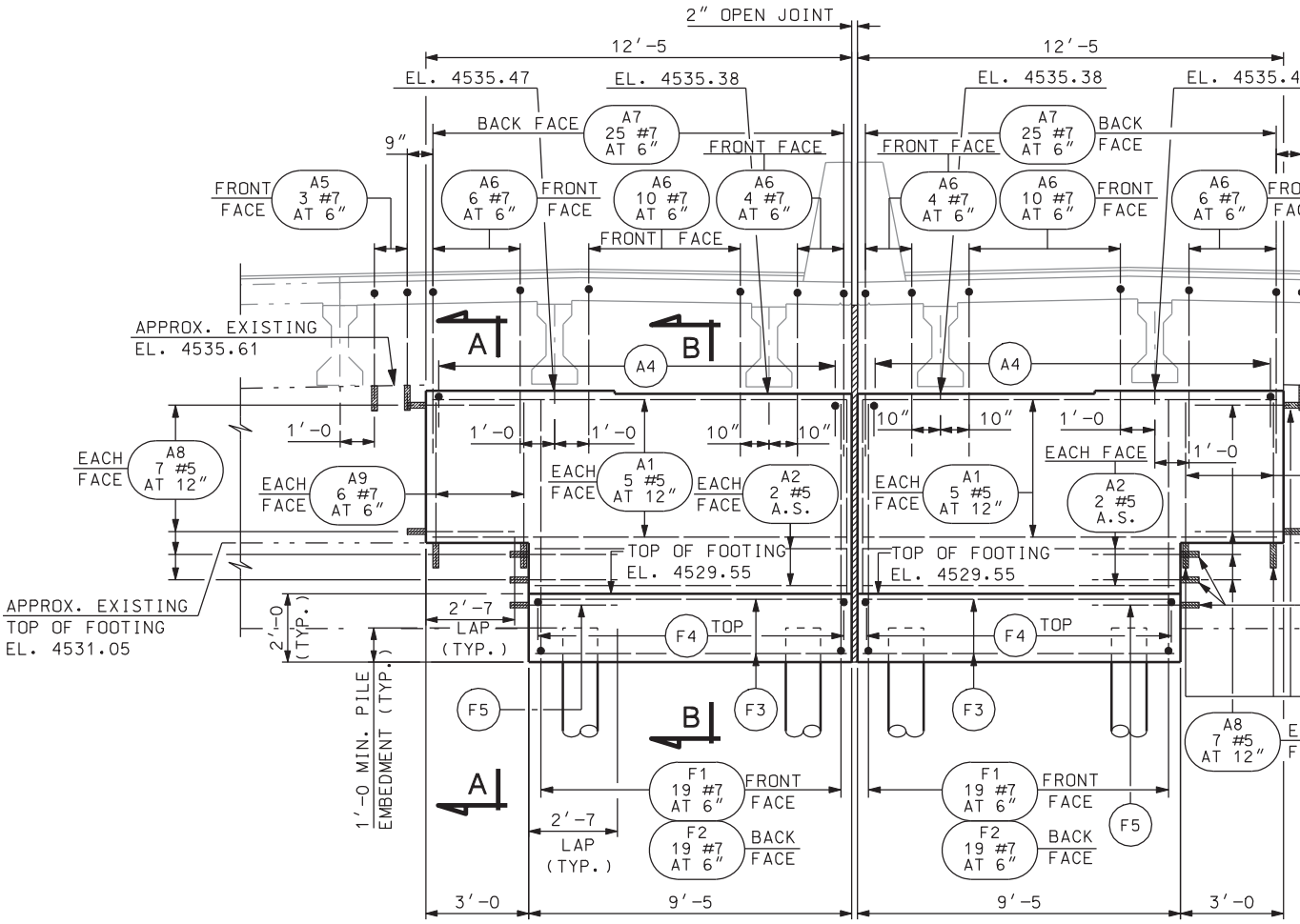


ELEVATION

DGN File: N:\Projects\4433.04\Sheet.Files\Structures\F-16W\4433.f-16w-07.abutment4.dgn

05-MAY-2005

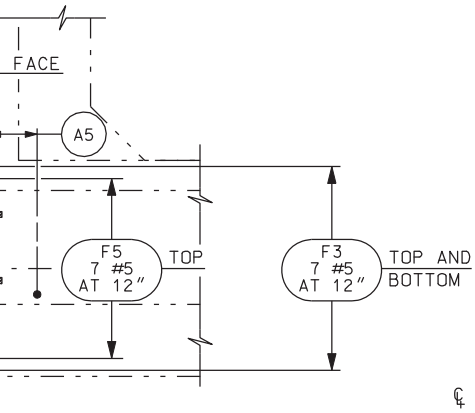


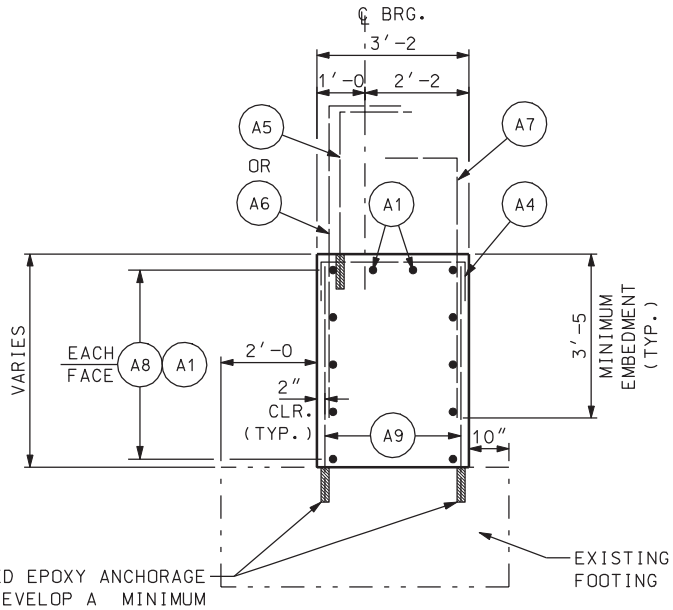


## SECTION A-A

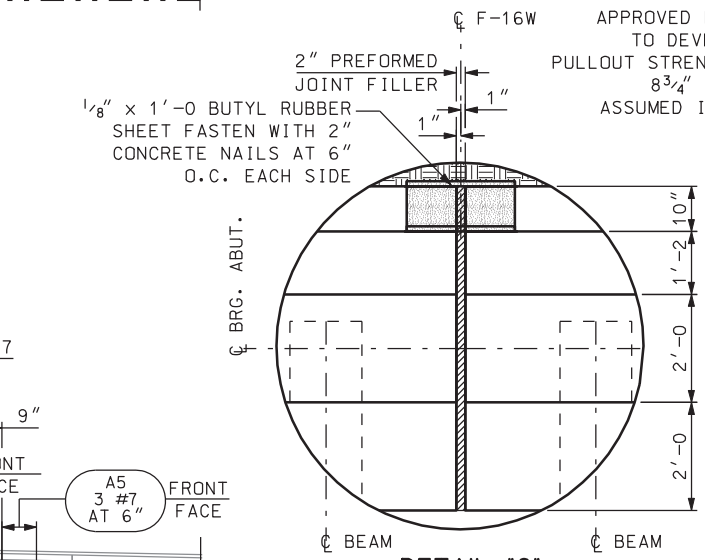


## DETAIL "C"

(USE RUBBER SHEET ON FACES OF JOINT IN CONTACT WITH SOIL)

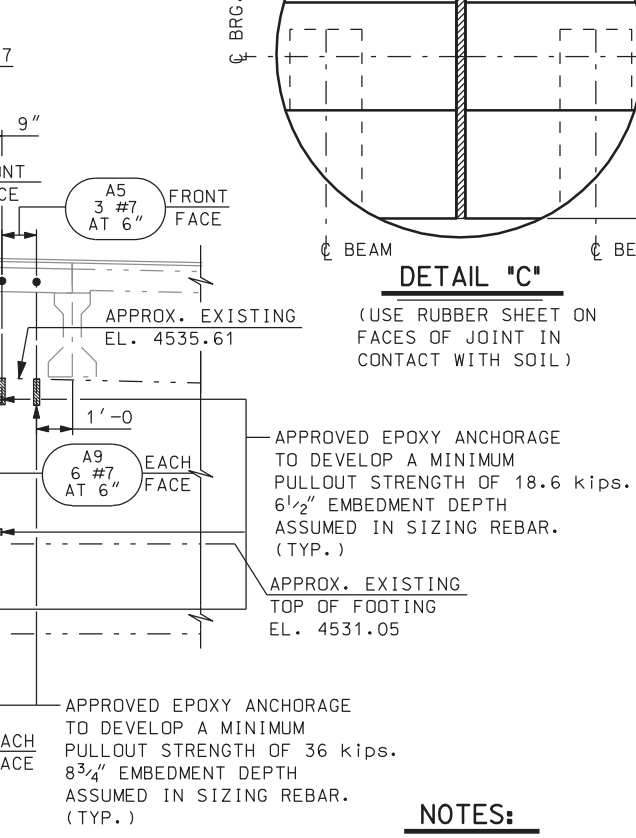


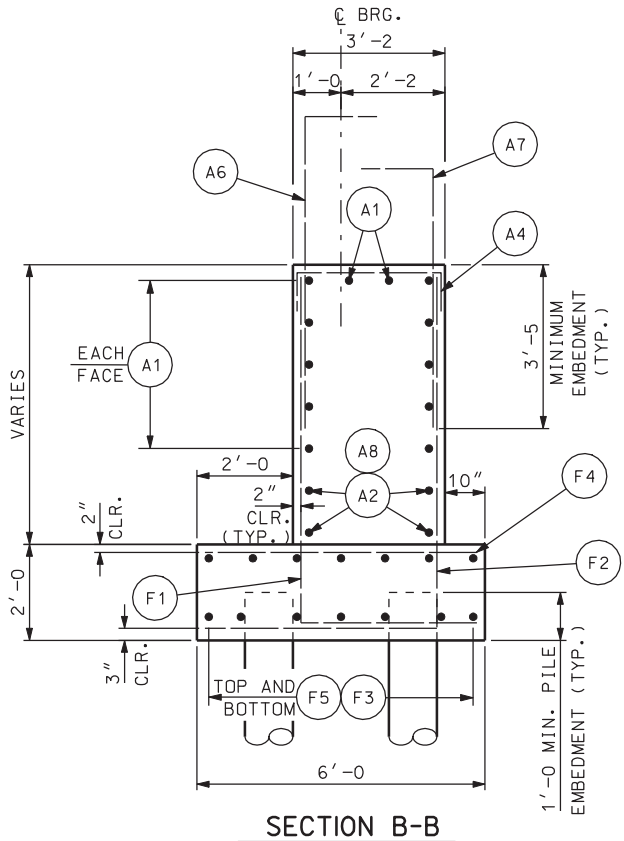


## SECTION B-B

## NOTES:

1. BAR SPACING IS THE MAXIMUM SPACING. SPACING IS ROUNDED TO THE NEAREST INCH.
2. FINISH BRIDGE SEAT BEARING AREA (2" LARGER THAN BEARING PAD) HIGH AND RUB OR GRIND LEVEL TO ELEVATION SHOWN ± ⅛". NO GROUTING ALLOWED.
3. PLACE ALL EPOXY ANCHORAGES INSIDE OF EXISTING REBAR.

## QUANTITIES

| | |
|---|---|
| STRUCTURAL CONCRETE | |
| FOOTING - NORTHBOUND | 4.2 CU. YDS. |
| FOOTING - SOUTHBOUND | 4.2 CU. YDS. |
| ABUTMENT - NORTHBOUND | 8.1 CU. YDS. |
| ABUTMENT - SOUTHBOUND | 8.1 CU. YDS. |
| TOTAL | 24.6 CU. YDS. |

| NO. | DATE | BY | REMARKS |
|---|---|---|---|
| | | | |

REVISIONS

UTAH DEPARTMENT OF TRANSPORTATION
SALT LAKE CITY, UTAH
STRUCTURES DIVISION

DESIGN MDR 12/04 CHECK GG 12/04
DRAWN LM 12/04 CHECK MDR 12/04
QUANT. MDR 12/04 CHECK LM 12/04

APPROVAL RECOMM. DATE SENIOR DESIGN ENGR.
APPROVED FOR USE BY UDOT DATE UDOT BRIDGE ENGR.

I-15: CORRIDOR IN UTAH COUNTY
400 SOUTH OVERPASS IN OREM
ABUTMENT #4 DETAILS

PROJECT NUMBER SP-15-6(52)241

UTAH
COUNTY

F-16W
DRG. NO.

SHT. 7 OF 21

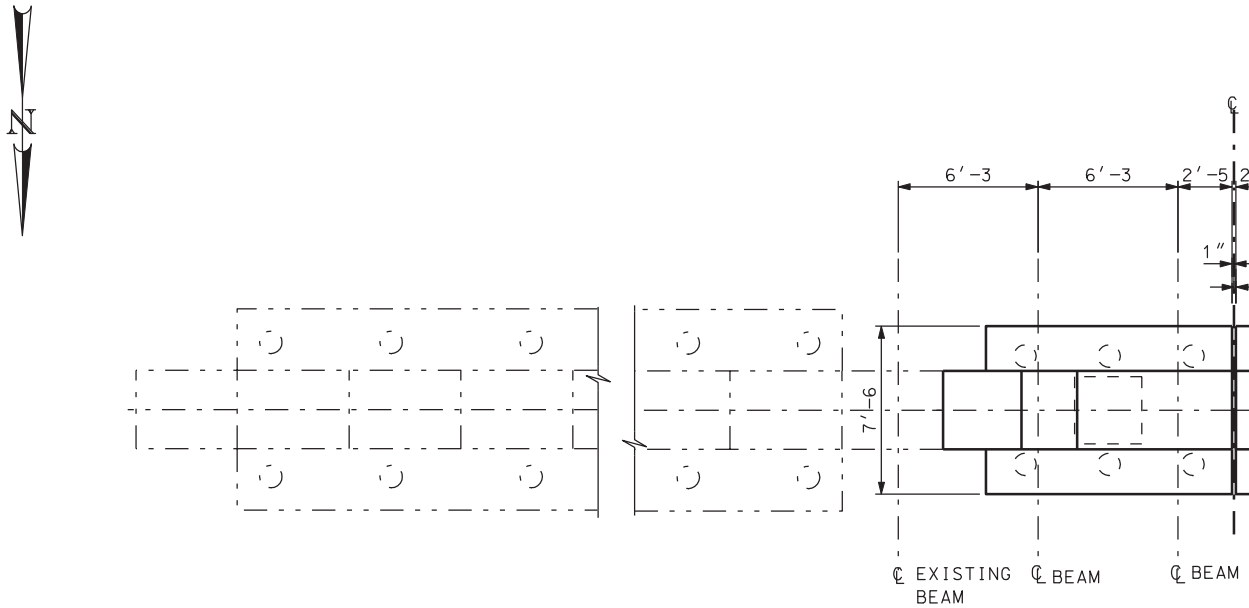


PLA

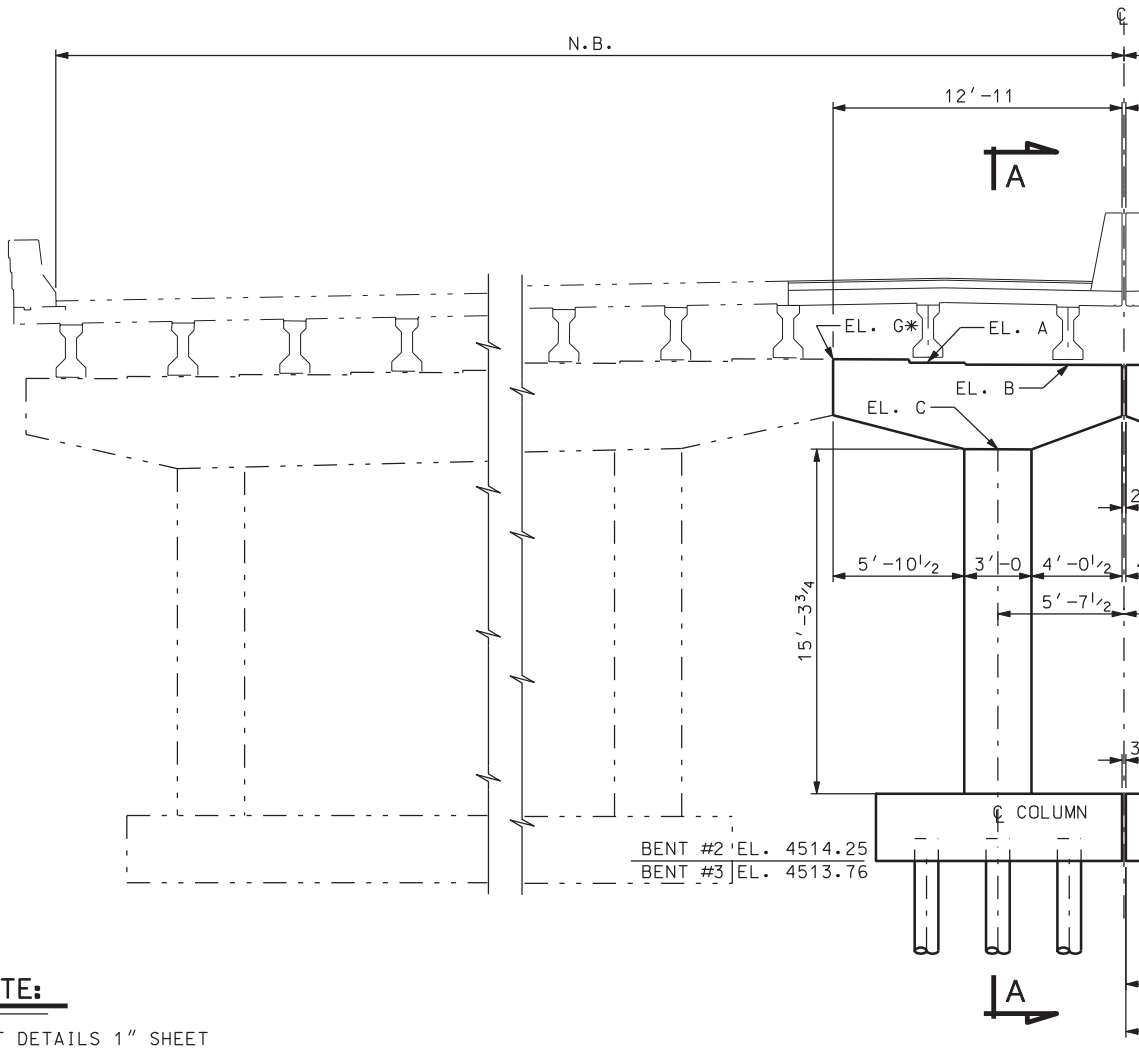


ELEVAT

BENT #3 S

## NOTE:

1. SEE "BENT DETAILS 1" SHEET FOR SECTION A-A.

DGN File: N:\Projects\4433.04\Sheet.Files\Structures\F-16W\4433.f-16w-08.bentplan.dgn

05-MAY-2005

F-16W

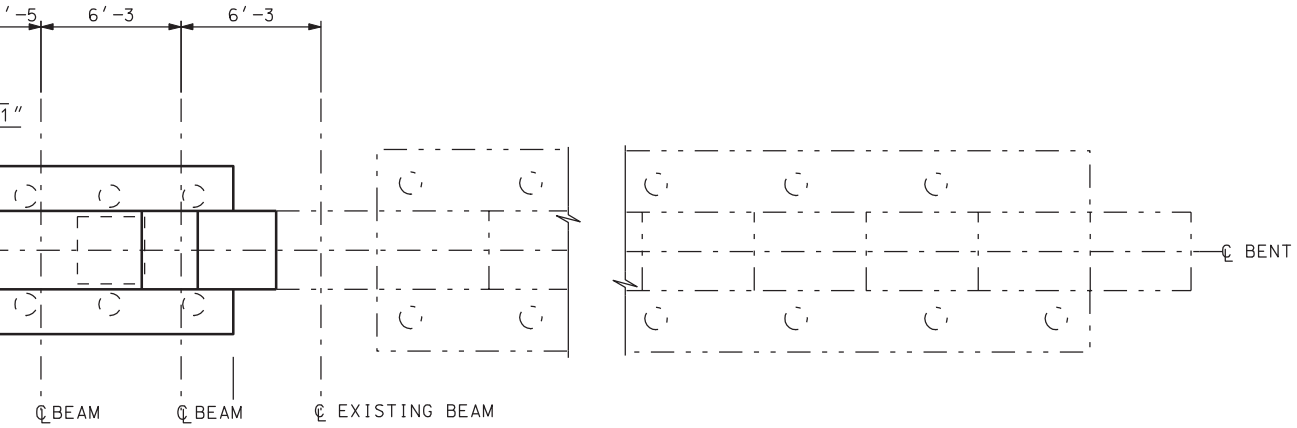


AN

F-16W

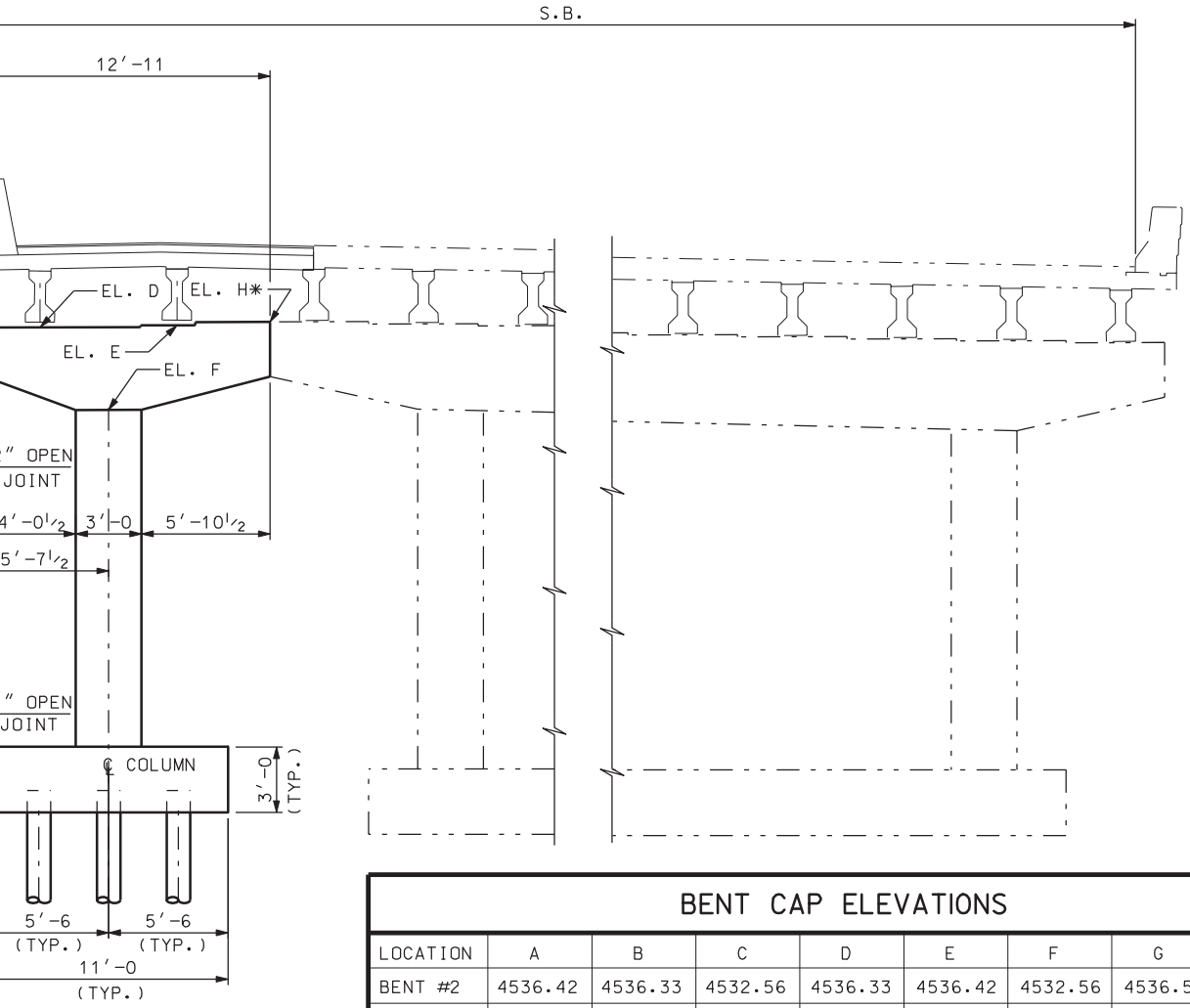


ION

IMILAR

## BENT CAP ELEVATIONS

| LOCATION | A | B | C | D | E | F | G | H |
|---|---|---|---|---|---|---|---|---|
| BENT #2 | 4536.42 | 4536.33 | 4532.56 | 4536.33 | 4536.42 | 4532.56 | 4536.56 | 4536.56 |
| BENT #3 | 4535.93 | 4535.84 | 4532.07 | 4535.84 | 4535.93 | 4532.07 | 4536.07 | 4536.07 |

* ELEVATIONS G AND H ARE FOR REFERENCE ONLY. MATCH TOP OF EXISTING CAP. IF REFERENCE ELEVATION DIFFERS FROM SURVEYED ELEVATION BY MORE THAN 1", NOTIFY THE ENGINEER.

REVISIONS

| NO. | DATE | BY | REMARKS |
|---|---|---|---|

UTAH DEPARTMENT OF TRANSPORTATION
SALT LAKE CITY, UTAH
STRUCTURES DIVISION

DESIGN GG 12/04 CHECK HCB 12/04
DRAWN LM 12/04 CHECK GG 12/04
QUANT. GG 12/04 CHECK MDR 12/04

APPROVAL RECOMM. DATE SENIOR DESIGN ENGR.
APPROVED FOR USE BY UDOT DATE UDOT BRIDGE ENGR.

I-15; CORRIDOR IN UTAH COUNTY
400 SOUTH OVERPASS IN OREM
BENT PLAN & ELEVATION

PROJECT NUMBER SP-15-6(52)241

UTAH
COUNTY

F-16W
DRG. NO.

SHT. 8 OF 21

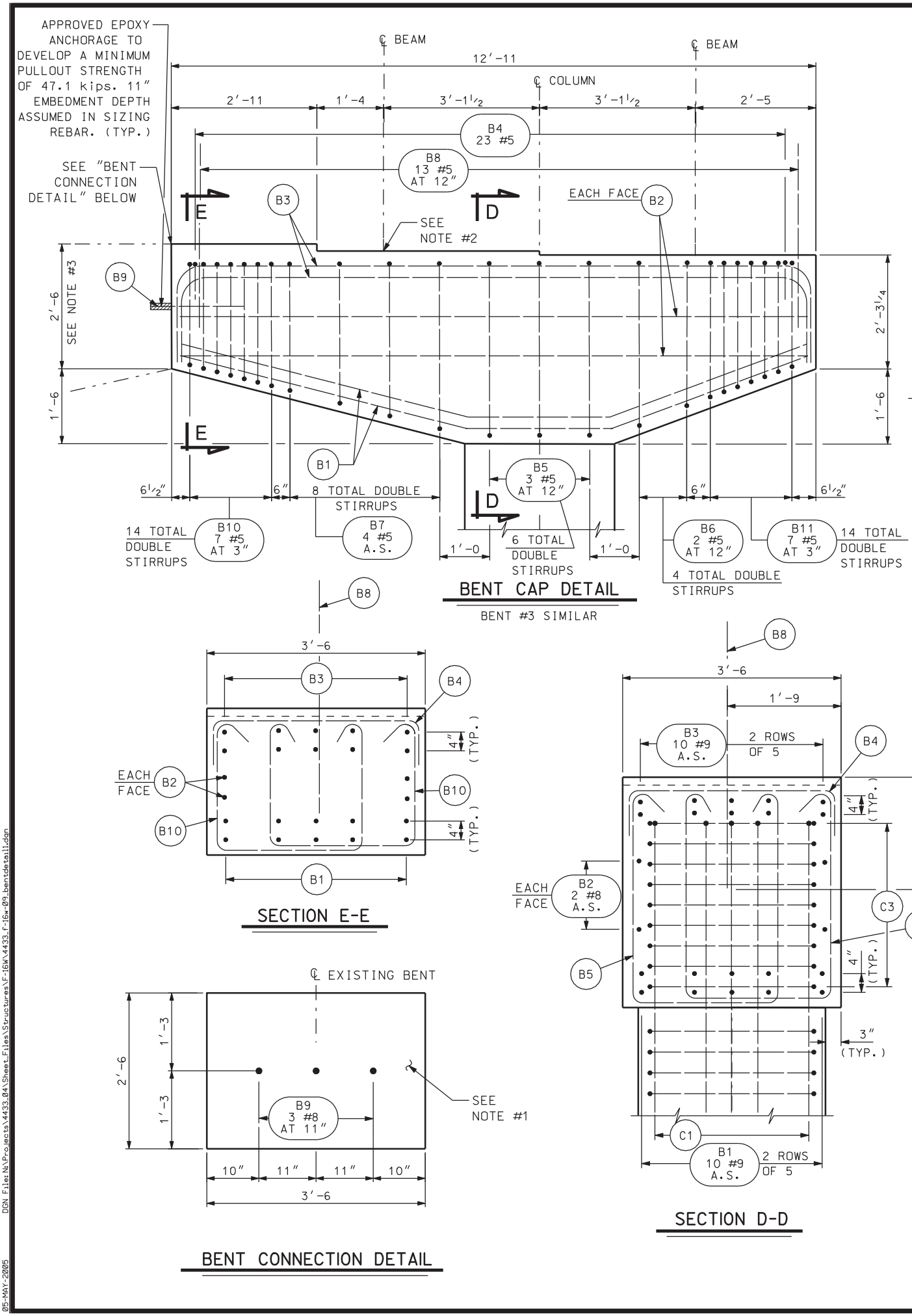


DGN File: N:\Projects\4433.04\Sheet.Files\Structures\F-16W\4433.f-16w-03.bentdetail.dgn

05-MAY-2005

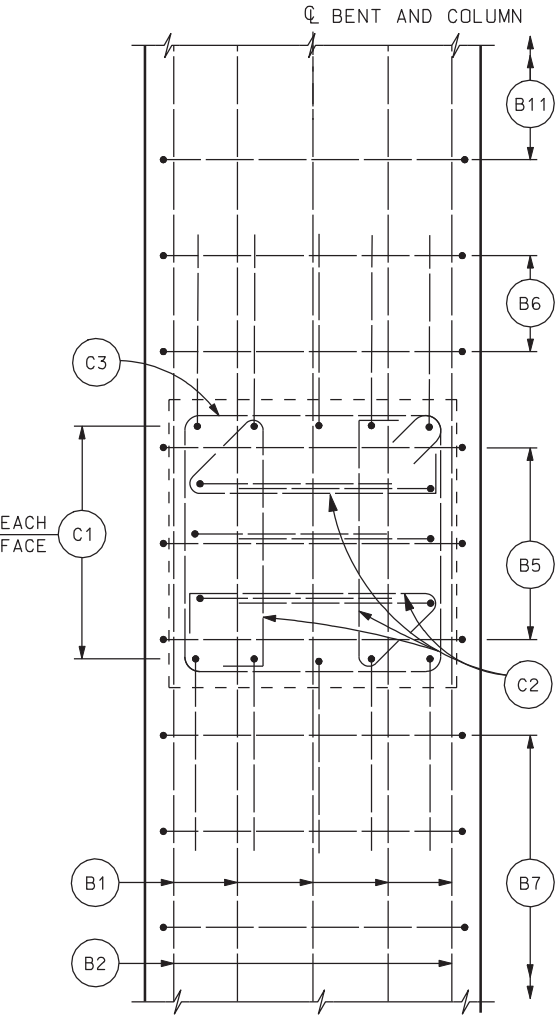


SECTION B-B

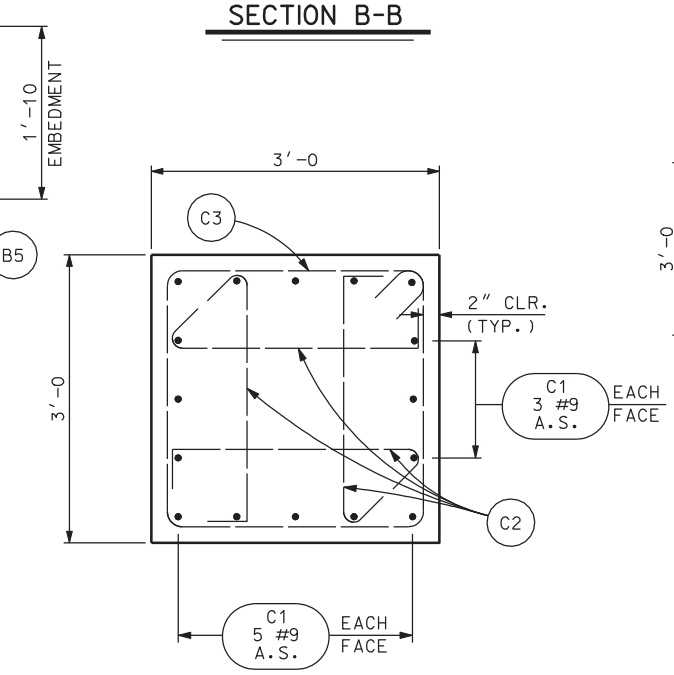


SECTION C-C

BENT #3 SIMILAR

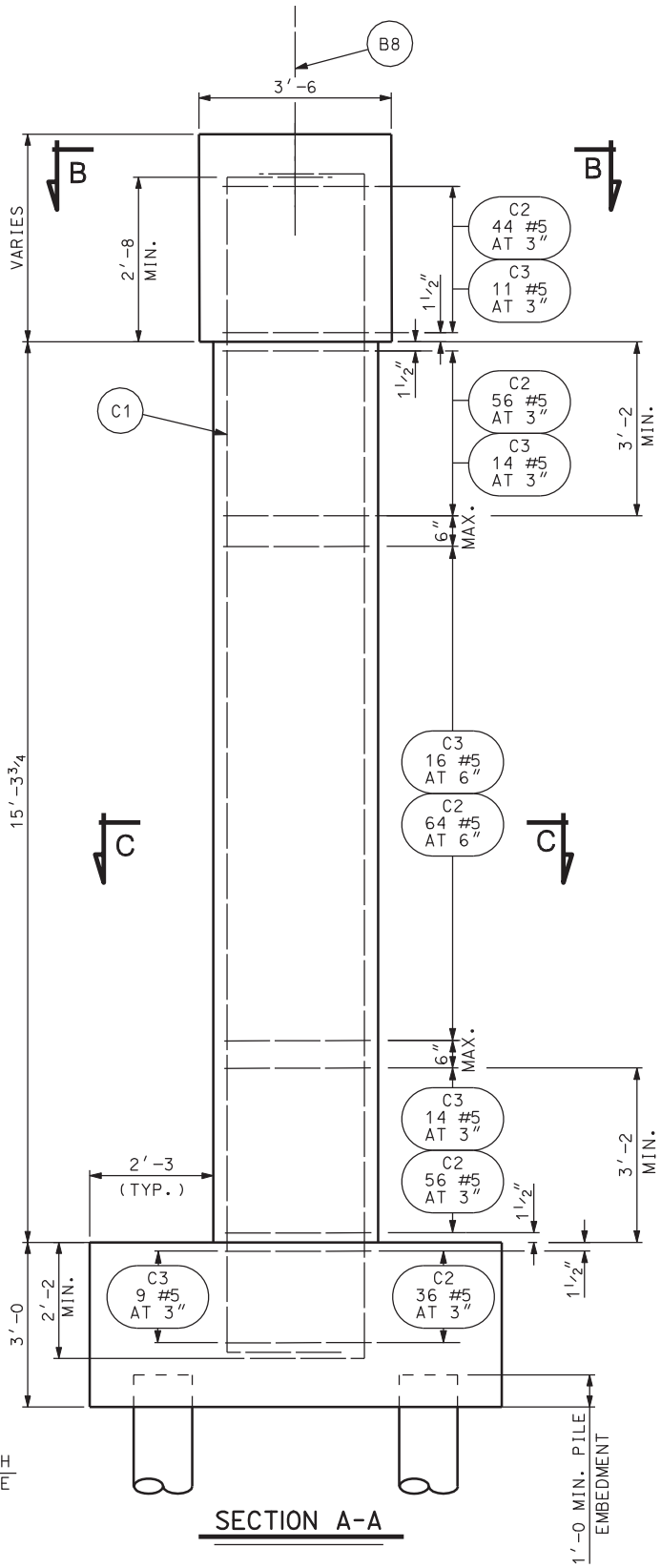


SECTION A-A

## NOTES:

1. FACE OF EXISTING TO BE ROUGHENED TO AN AMPLITUDE OF ½" BEFORE DOWELS ARE PLACED AND FORMS ARE SET FOR NEW CONSTRUCTION.
2. FINISH BRIDGE SEAT BEARING AREA (2" LARGER THAN BEARING PAD) HIGH AND RUB OR GRIND LEVEL TO ELEVATION SHOWN ± ⅛". NO GROUTING ALLOWED.
3. MATCH TOP AND BOTTOM OF EXISTING BENT CAP.

| NO. | DATE | BY | REMARKS |
|---|---|---|---|
| | | | |

REVISIONS

UTAH DEPARTMENT OF TRANSPORTATION
SALT LAKE CITY, UTAH
STRUCTURES DIVISION

DESIGN GG 12/04 CHECK HCB 12/04
DRAWN LM 12/04 CHECK GG 12/04
QUANT. GG 12/04 CHECK MDR 12/04

APPROVAL RECOMM. DATE SENIOR DESIGN ENGR.
APPROVED FOR USE BY UDOT DATE UDOT BRIDGE ENGR.

I-15: CORRIDOR IN UTAH COUNTY
400 SOUTH OVERPASS IN OREM
BENT DETAILS 1

PROJECT NUMBER SP-15-6(52)241

UTAH
COUNTY

F-16W
DRG. NO.

SHT. 9 OF 21

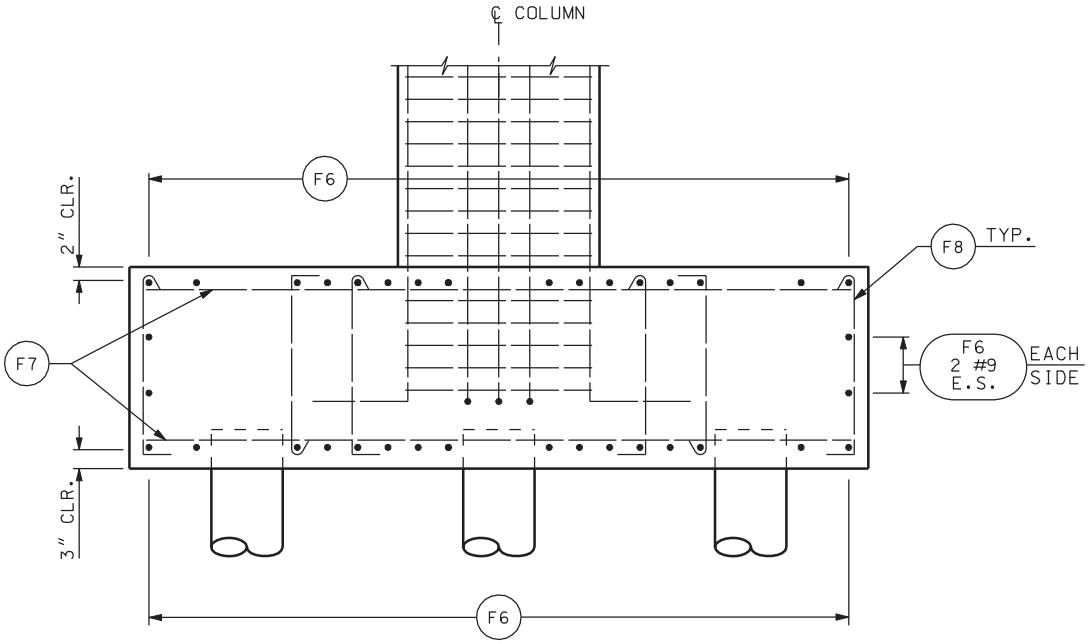


## SECTION F-F

BENT #3 SIMILAR

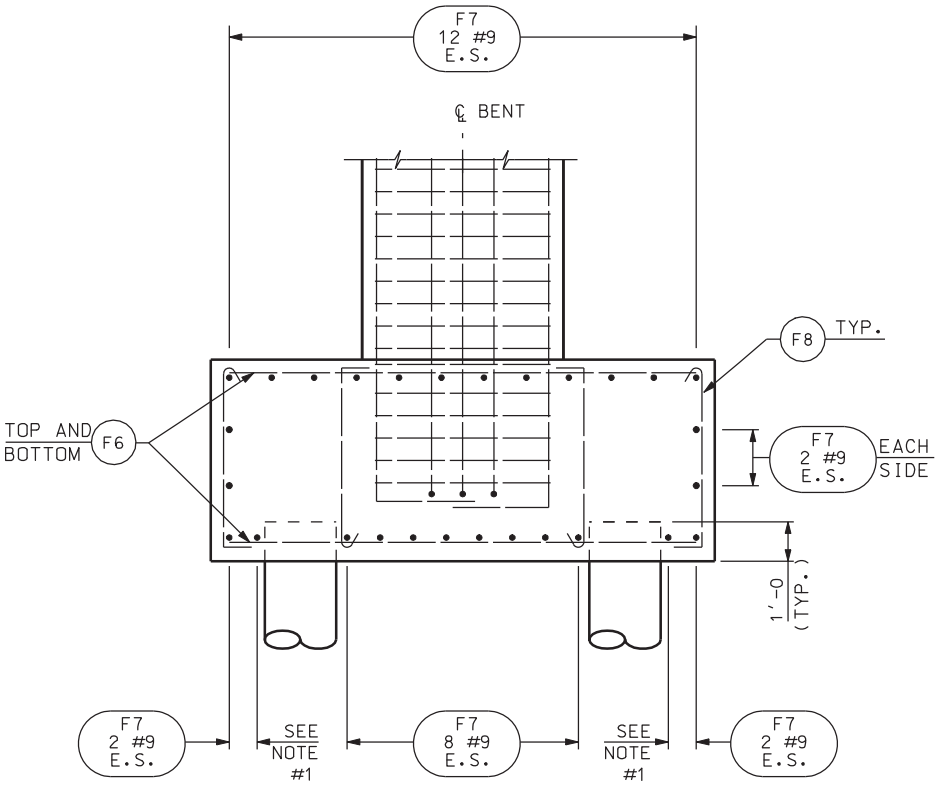


## SECTION G-G

BENT #3 SIMILAR

DGN File: N:\Projects\4433.04\Sheet.Files\Structures\F-16W\4433.f-16w-10.bentdetail2.dgn
05-MAY-2005

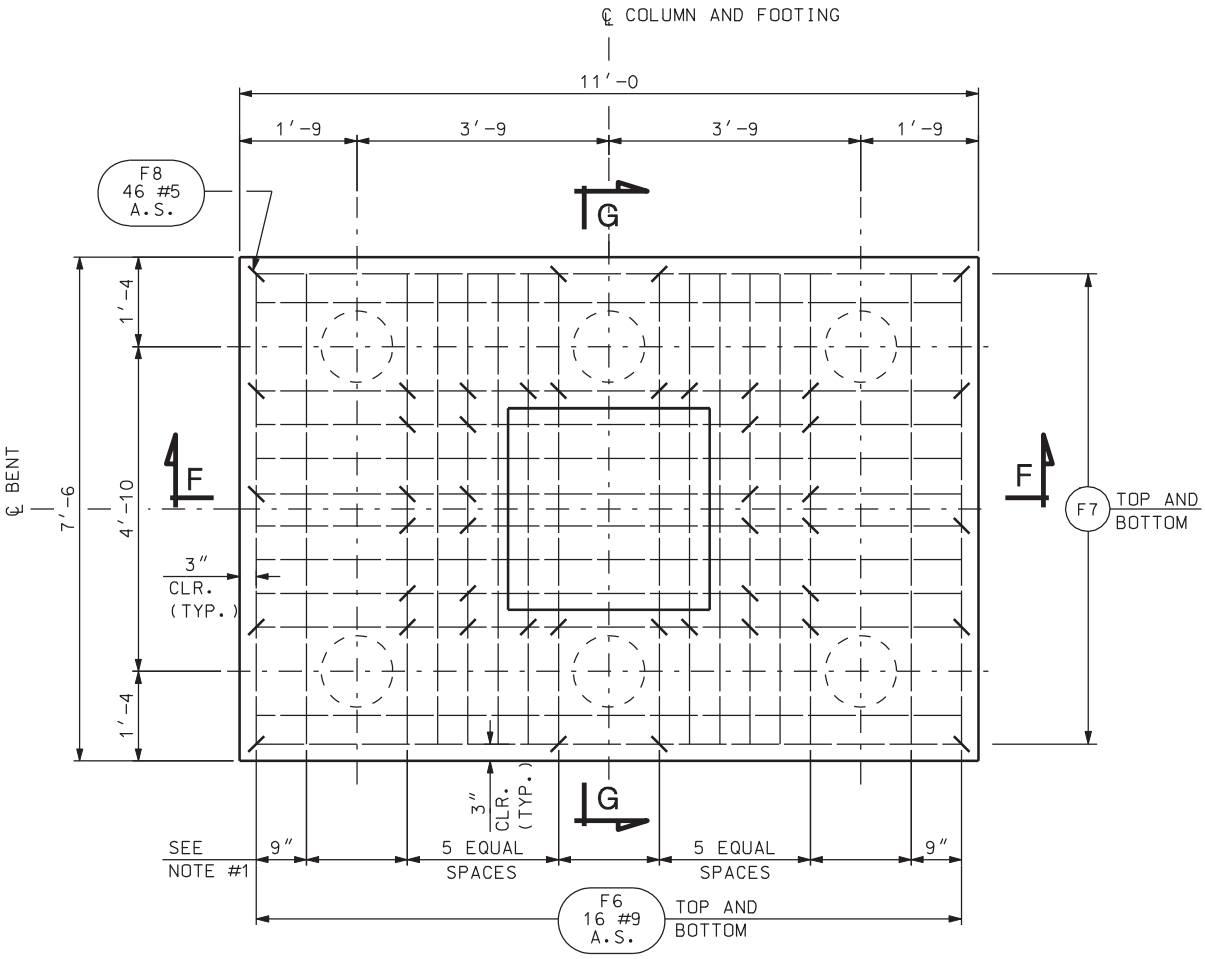


## FOOTING PLAN

(COLUMN REINFORCMENT NOT SHOWN FOR CLARITY)
BENT #3 SIMILAR

## NOTE:

1. ADJUST REINFORCING AS REQUIRED TO AVOID MISALIGNED PILES.

| STRUCTURAL CONCRETE QUANTITIES (CU. YDS.) | | | | |
|---|---|---|---|---|
| | BENT #2 | | BENT #3 | |
| | NORTHBOUND | SOUTHBOUND | NORTHBOUND | SOUTHBOUND |
| BENT CAP | 5.5 | 5.5 | 5.5 | 5.5 |
| COLUMN | 5.1 | 5.1 | 5.1 | 5.1 |
| FOOTING | 9.2 | 9.2 | 9.2 | 9.2 |
| SUBTOTAL | 19.8 | 19.8 | 19.8 | 19.8 |
| TOTAL | 79.2 | | | |

REVISIONS

| NO. | DATE | BY | REMARKS |
|---|---|---|---|
| | | | |

UTAH DEPARTMENT OF TRANSPORTATION
SALT LAKE CITY, UTAH
STRUCTURES DIVISION

DESIGN GG 12/04 CHECK HCB 12/04
DRAWN LM 12/04 CHECK GG 12/04
QUANT. GG 12/04 CHECK HCB MM/YY

APPROVAL RECOMM. DATE SENIOR DESIGN ENGR.
APPROVED FOR USE BY UDOT DATE UDOT BRIDGE ENGR.

I-15: CORRIDOR IN UTAH COUNTY
400 SOUTH OVERPASS IN OREM
BENT DETAILS 2

PROJECT NUMBER SP-15-6(52)241

UTAH
COUNTY

F-16W
DRG. NO.

SHT. 10 OF 21

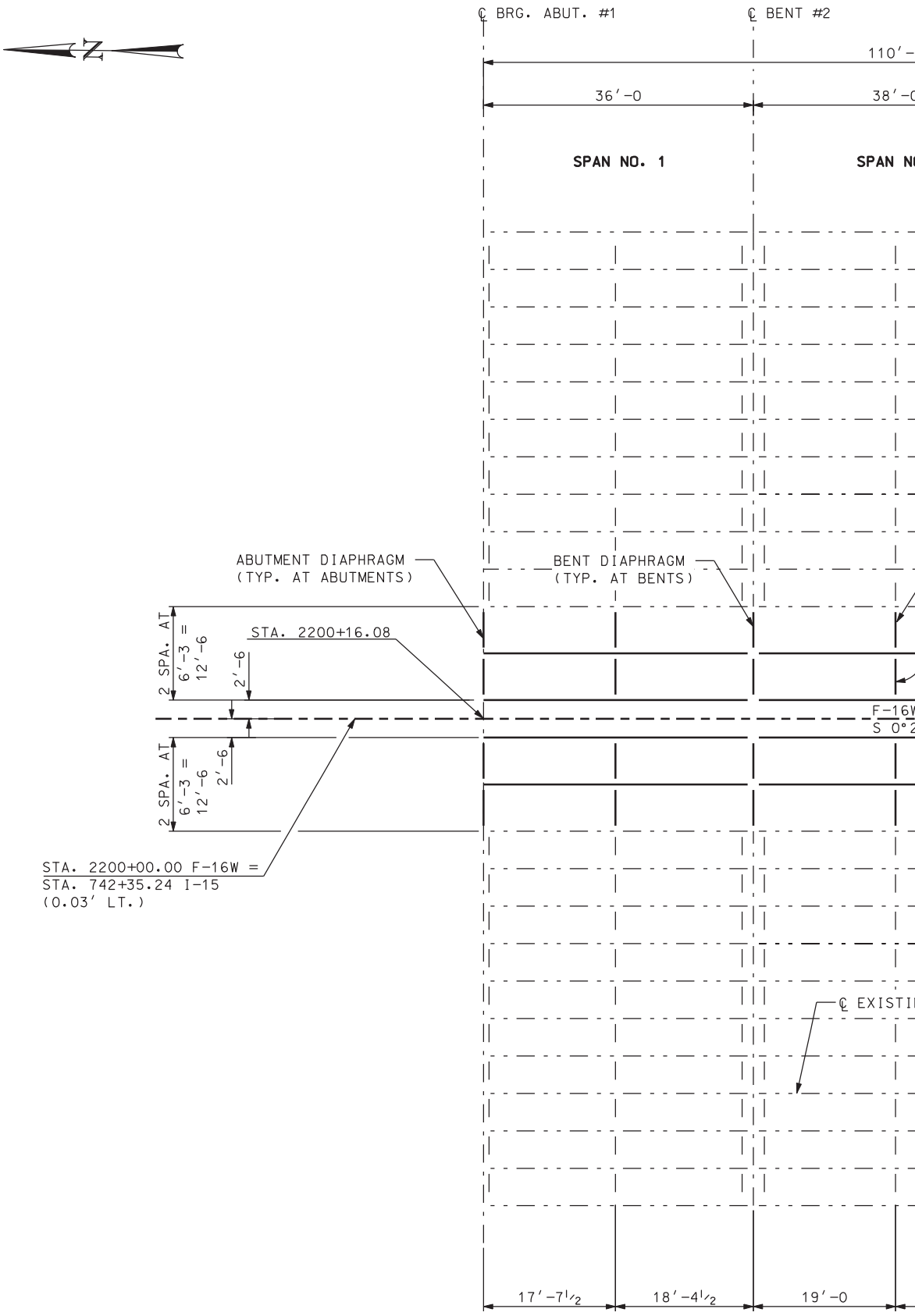


FRAMING

DGN File: N:\Projects\4433.04\Sheet.Files\Structures\F-16W\4433.f-16w-11.framing.dgn

05-MAY-2005

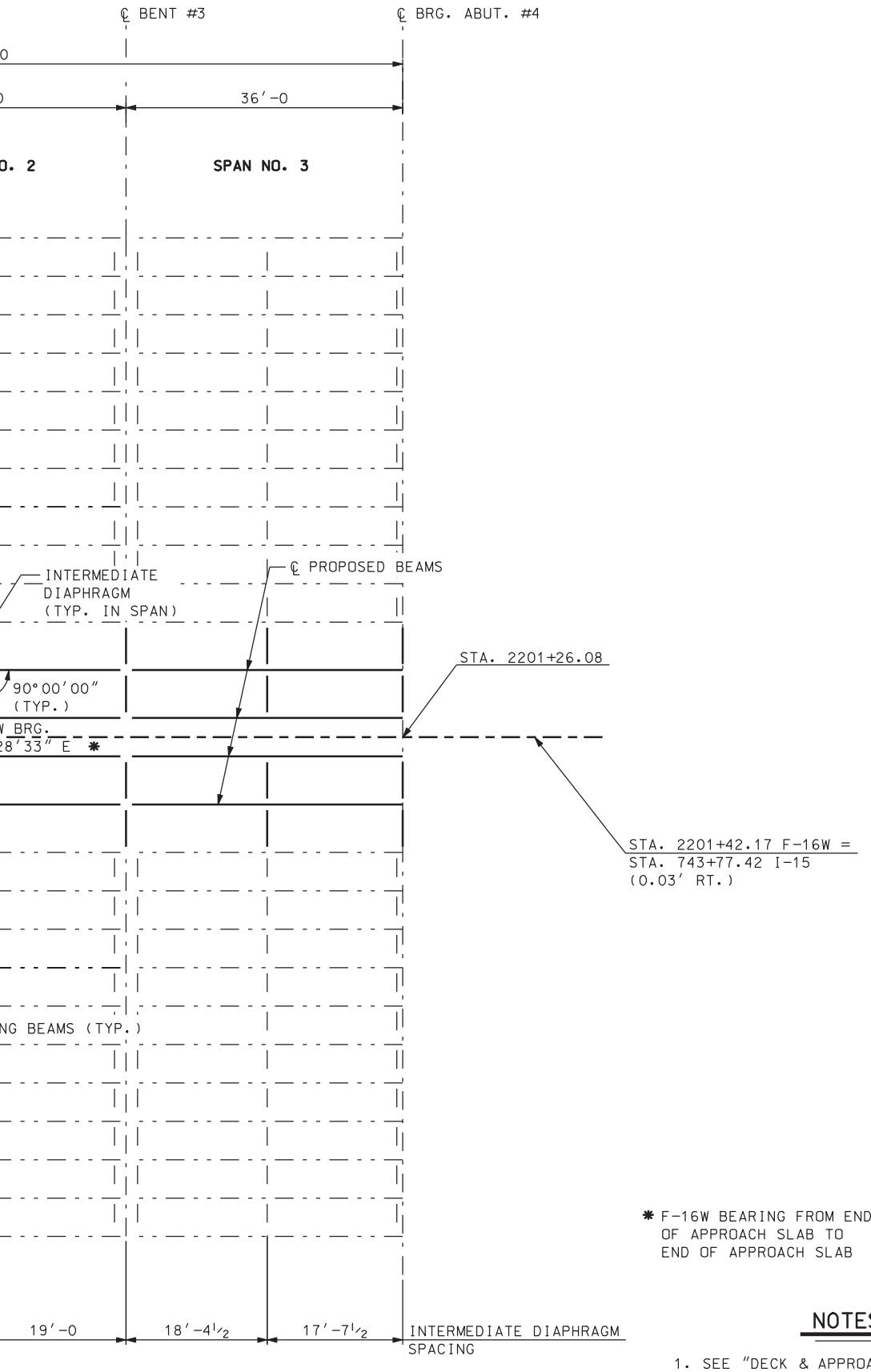


✱ F-16W BEARING FROM END OF APPROACH SLAB TO END OF APPROACH SLAB

## NOTES:

1. SEE "DECK & APPROACH SLAB DETAILS" SHEET FOR SECTION AT INTERMEDIATE DIAPHRAGM.

PLAN

| NO. | DATE | BY | REMARKS |
|---|---|---|---|
| | | | |

REVISIONS

UTAH DEPARTMENT OF TRANSPORTATION
SALT LAKE CITY, UTAH
STRUCTURES DIVISION

DESIGN MDR 12/04 CHECK GG 12/04
DRAWN LM 12/04 CHECK MDR 12/04
QUANT. CHECK

APPROVAL RECOMM. DATE SENIOR DESIGN ENGR.
APPROVED FOR USE BY UDOT DATE UDOT BRIDGE ENGR.

I-15: CORRIDOR IN UTAH COUNTY
400 SOUTH OVERPASS IN OREM
FRAMING PLAN

PROJECT NUMBER SP-15-6(52)241

UTAH
COUNTY

F-16W
DRG. NO.

SHT. 11 OF 21

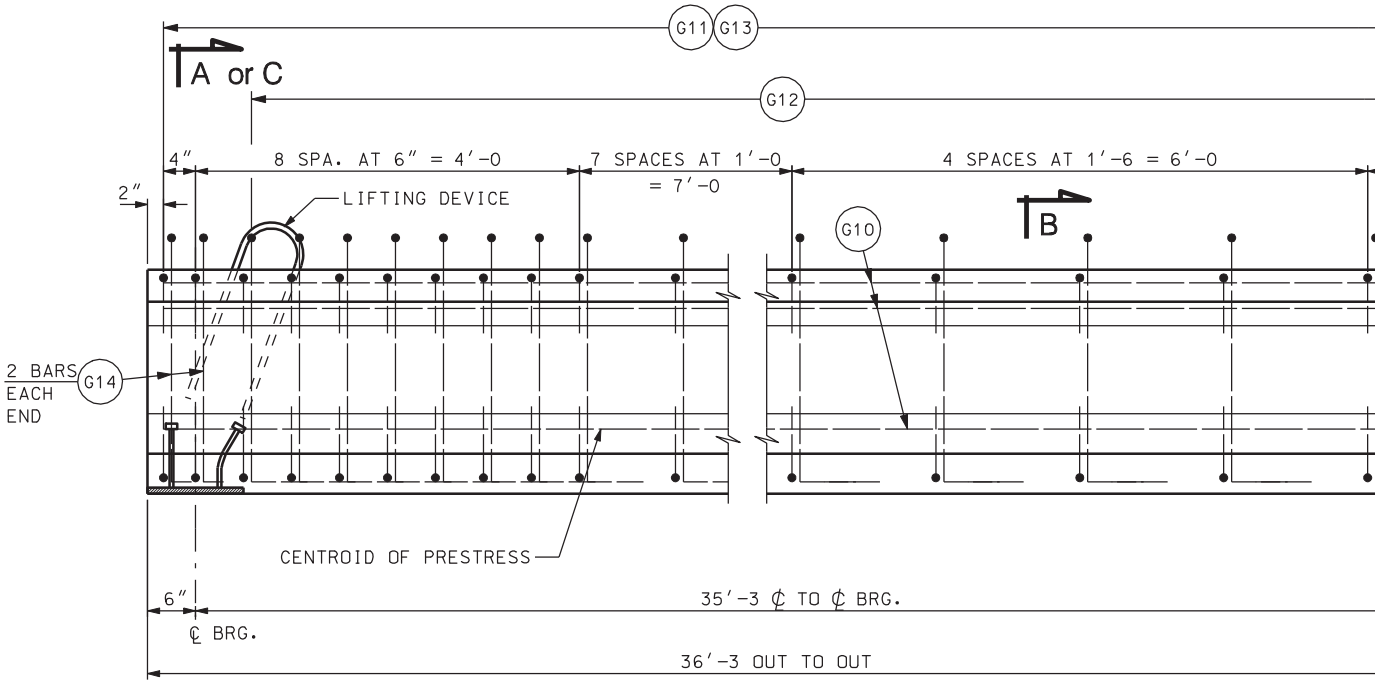


PARTIAL ELEVATION

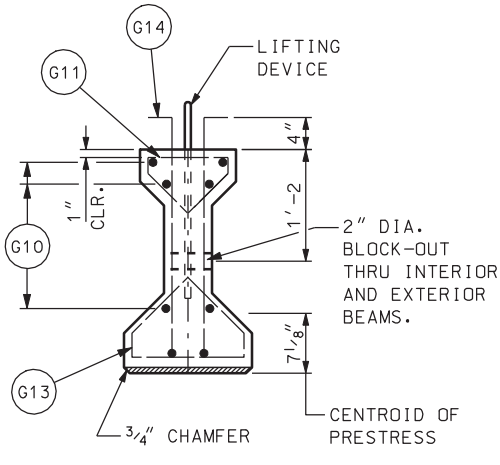


SECTION A-A

(AT ABUTMENT END)

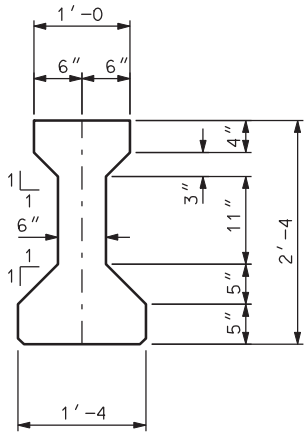


TYPICAL SECTION

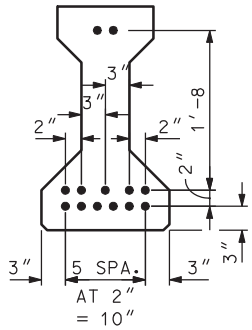


STRAND PATTERN

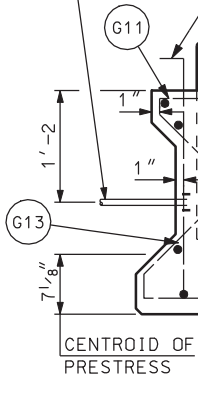


SECTIO

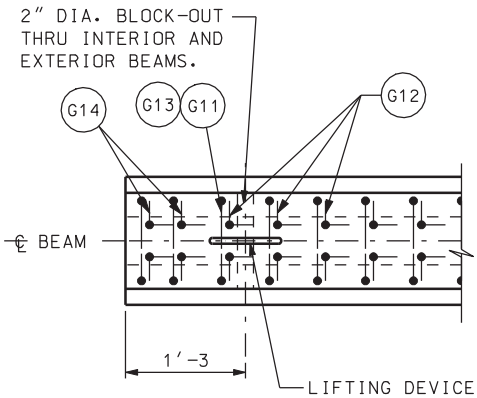


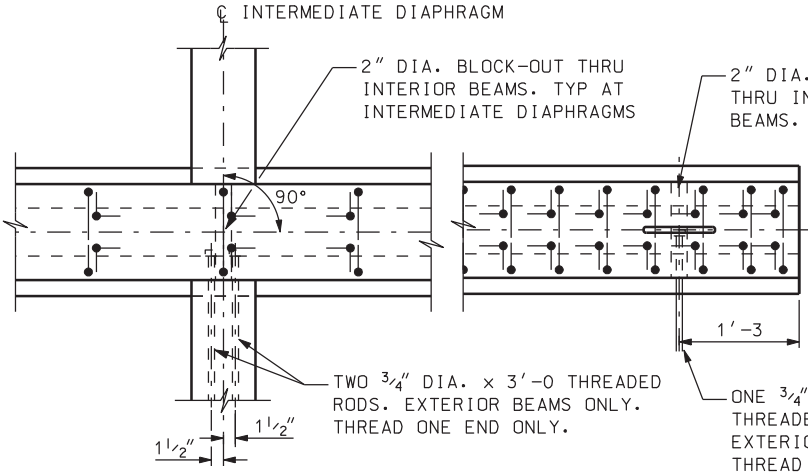


PARTIAL PLAN

DGN File: N:\Projects\4433.04\Sheet.Files\Structures\VF-16W\4433.f-16w-12_beamdetail.dgn
05-MAY-2005

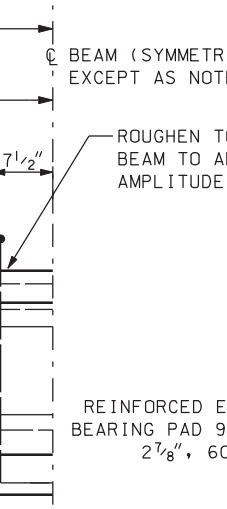


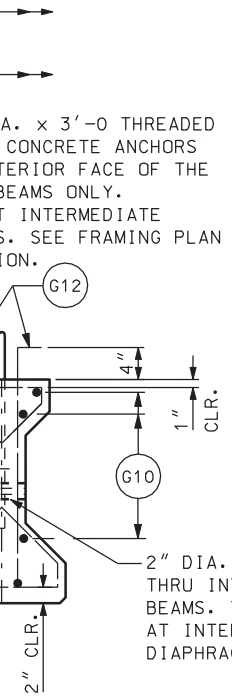


ON B-B

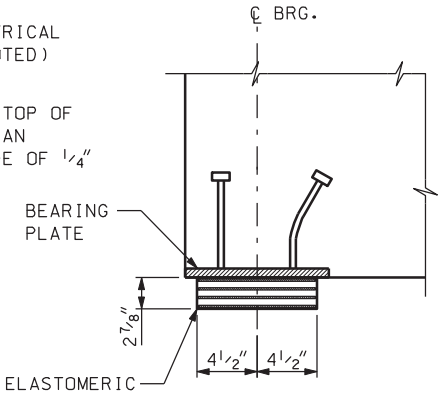


BEARING DETAIL

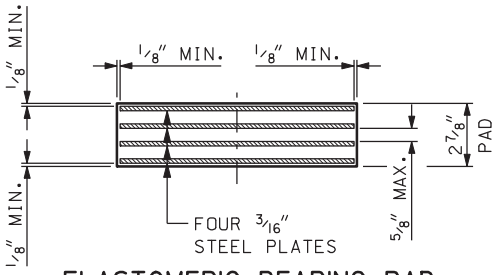


ELASTOMERIC BEARING PAD

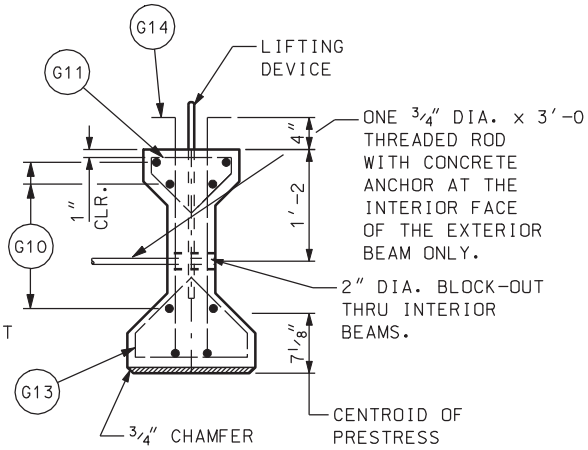


SECTION C-C

(AT BENT END)

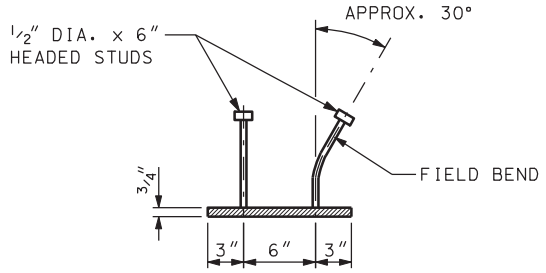


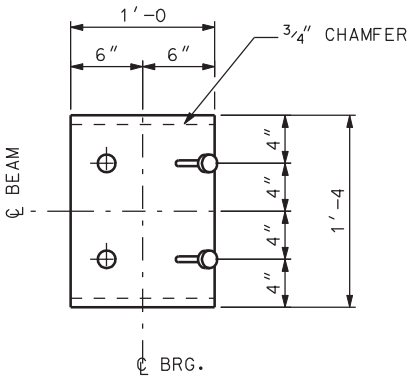


BEARING PLATE DETAIL

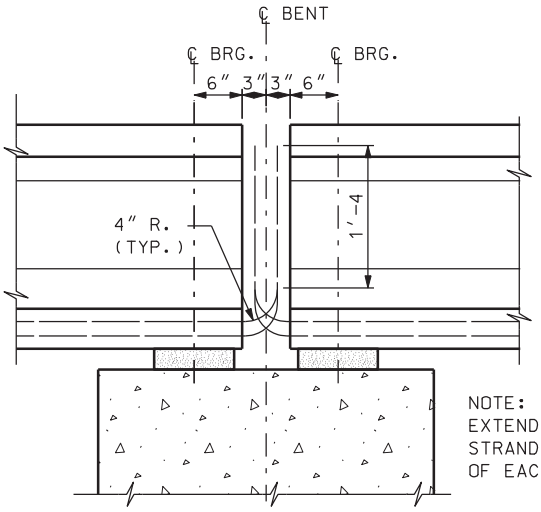


BEAM DETAILS AT BENT

NOTE:
EXTEND 5 PRESTRESSING STRANDS FROM THE END OF EACH BEAM AS SHOWN

## REINFORCING STEEL SCHEDULE

| MARK | SIZE NO. | LENGTH | SKETCH |
|---|---|---|---|
| G 10 | 4 | 35'-11 | |
| G 11 | 5 | 2'-4 | 2" 7" 10" 1 1 |
| G 12 | 5 | 4'-0 | 8" X Y 10" Z 2'-6 |
| G 13 | 5 | 3'-4 | 3" 10" 1'-2 1 1 |
| G 14 | 5 | 3'-5 | 8" X Y 3" Z 2'-6 |

## GENERAL NOTES

1. UNLESS OTHERWISE SHOWN, ALL DIMENSIONS ARE OUT TO OUT OF BARS.
2. USE ½" DIAMETER PRESTRESSING STRANDS.
3. PLACE BEARING PLATES AND PADS PERPENDICULAR TO BEAM CENTER LINE.
4. USE COATED REINFORCING BARS CONFORMING TO AASHTO DESIGNATION M 31, GRADE 60.

## AASHTO TYPE I BEAM

FINAL PRESTRESSING FORCES AFTER LOSSES = 320.2 kips
$f'_{ci}$ = 4,000
$f'_c$ = 5,000
4 EXTERIOR BEAMS REQUIRED
4 INTERIOR BEAMS REQUIRED

MIN. AREA PRESTRESSING STEEL = 1.99 SQ. IN.

| NO. | DATE | BY | REMARKS |
|---|---|---|---|

REVISIONS

UTAH DEPARTMENT OF TRANSPORTATION
SALT LAKE CITY, UTAH
STRUCTURES DIVISION

DESIGN MDR 12/04 CHECK GG 12/04
DRAWN LM 12/04 CHECK MDR 12/04
QUANT. MDR 12/04 CHECK LM 12/04

APPROVAL RECOMM. DATE SENIOR DESIGN ENGR.
APPROVED FOR USE BY UDOT DATE UDOT BRIDGE ENGR.

I-15; CORRIDOR IN UTAH COUNTY
400 SOUTH OVERPASS IN OREM
BEAM DETAILS; SPANS 1 & 3

PROJECT NUMBER SP-15-6(52)241

UTAH
COUNTY

F-16W
DRG. NO.

SHT. 12 OF 21

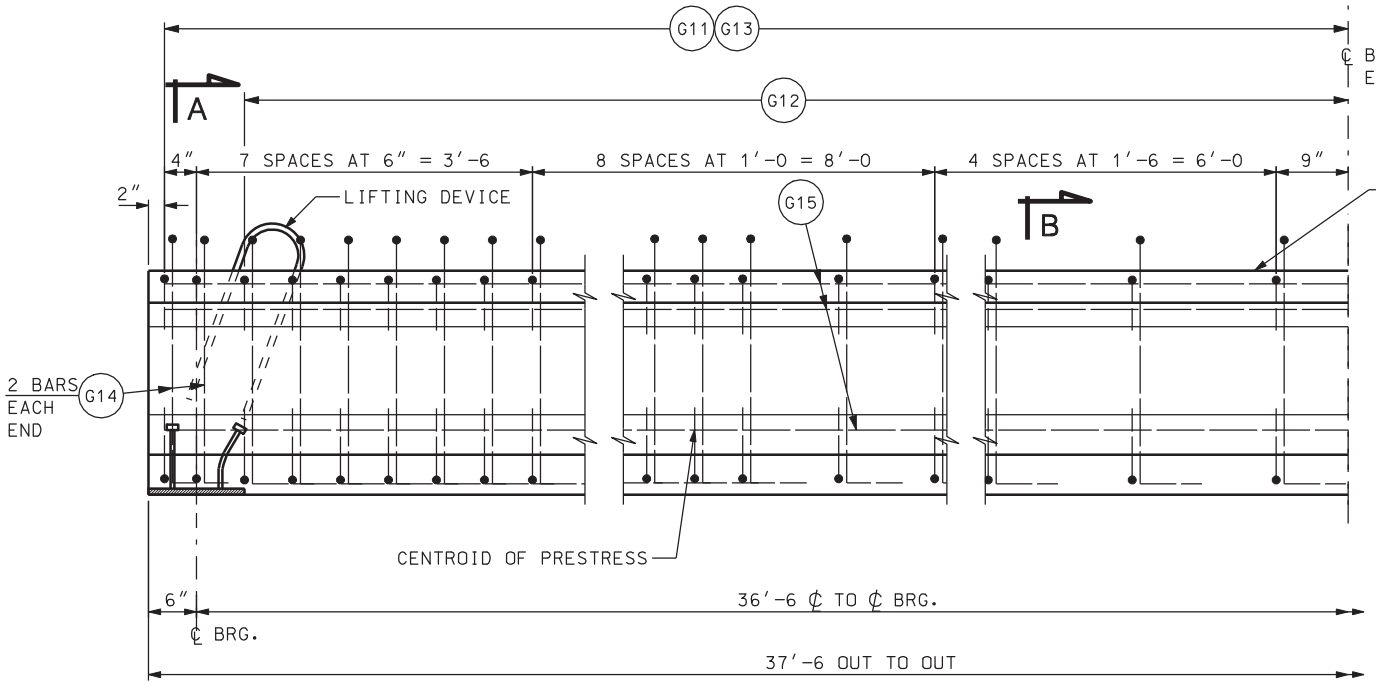


PARTIAL ELEVATION

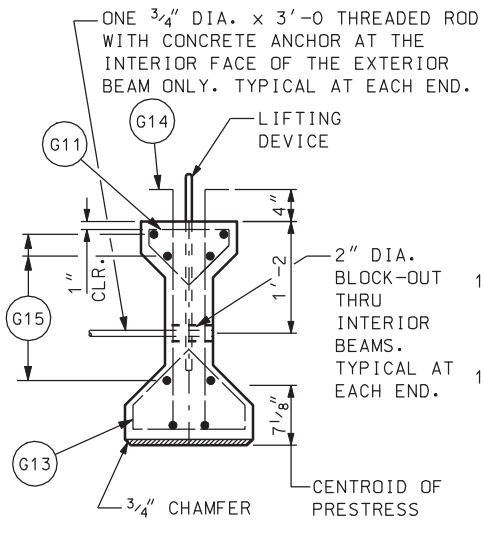


SECTION A-A

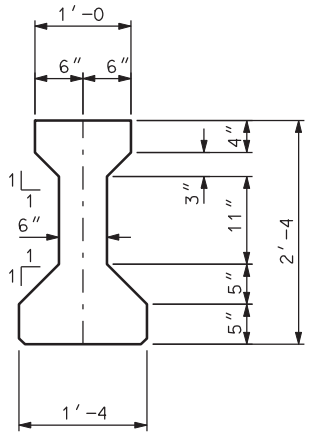


TYPICAL SECTION

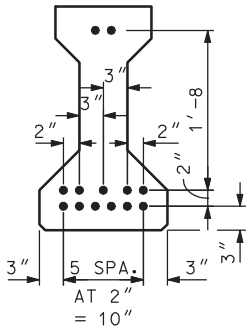


STRAND PATTERN

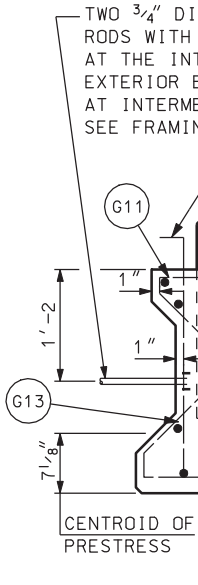


SECTIO

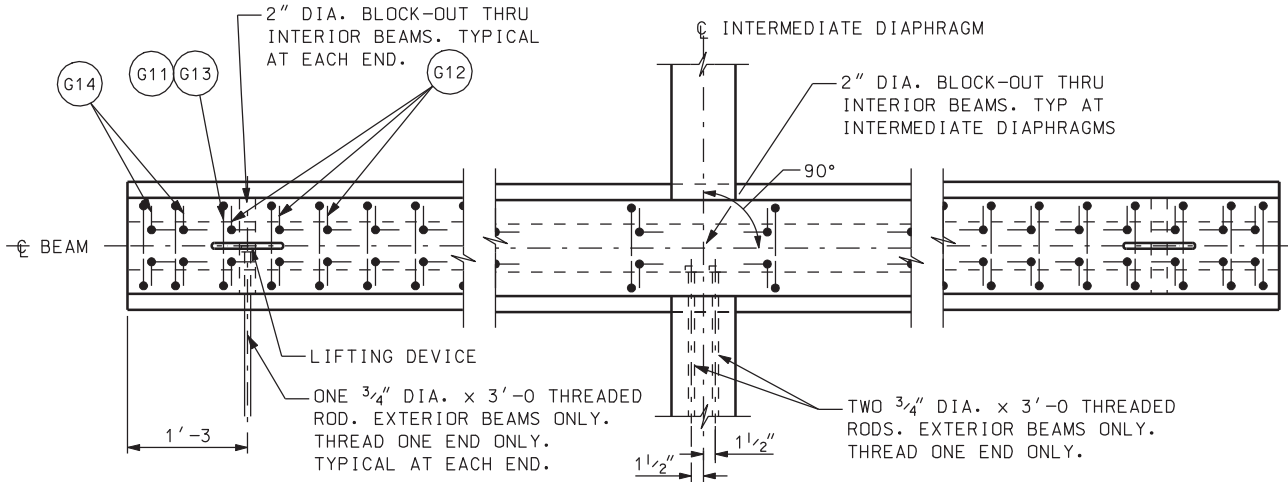


PARTIAL PLAN

DGN File: N:\Projects\4433.04\Sheet.Files\Structures\F-16W\4433.f-16w-13_beamdetail2.dgn
05-MAY-2005

EAM (SYMMETRICAL
XCEPT AS NOTED)

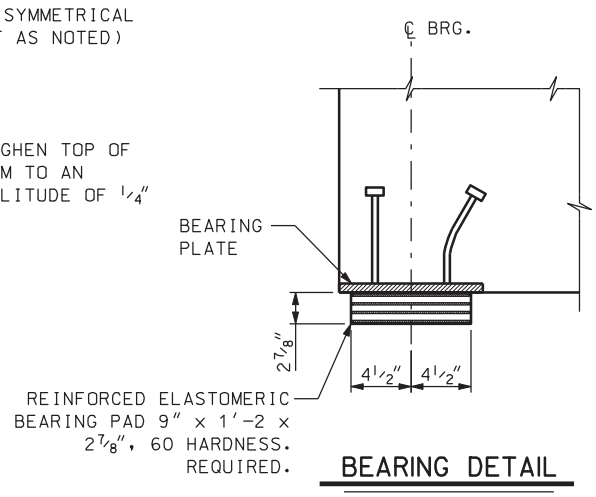


BEARING DETAIL

## REINFORCING STEEL SCHEDULE

| MARK | SIZE NO. | LENGTH | SKETCH |
|---|---|---|---|
| G 15 | 4 | 37'-2 | |
| G 11 | 5 | 2'-4 | 2", 7", 10", 1, 1 |
| G 12 | 5 | 4'-0 | 8", X, Y, 10", Z, 2'-6 |
| G 13 | 5 | 3'-4 | 3", 10", 1'-2, 1, 1 |
| G 14 | 5 | 3'-5 | 8", X, Y, 3", Z, 2'-6 |

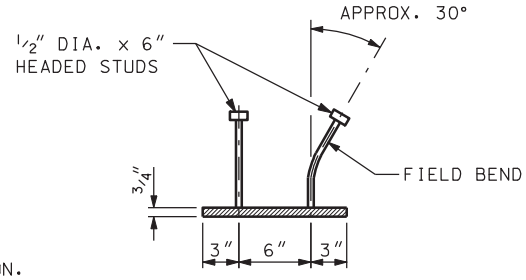


A. x 3'-0 THREADED
CONCRETE ANCHORS
TERIOR FACE OF THE
BEAMS ONLY. TYPICAL
EDIATE DIAPHRAGMS.
NG PLAN FOR LOCATION.

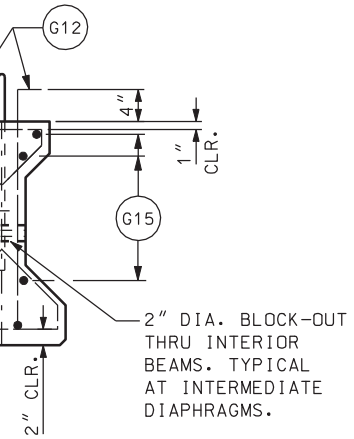


ON B-B

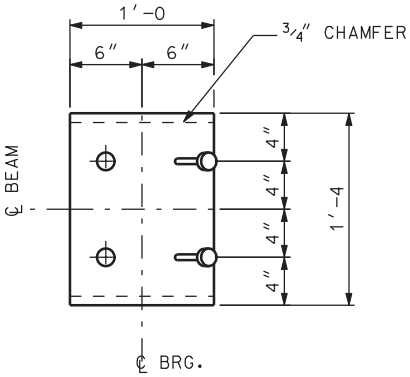


BEARING PLATE DETAIL

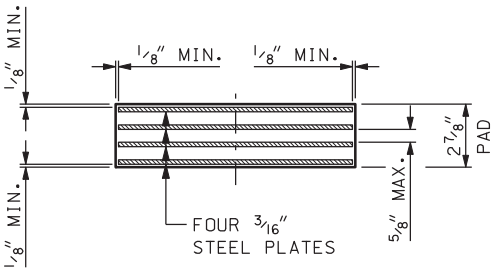


ELASTOMERIC BEARING PAD

## GENERAL NOTES

1. UNLESS OTHERWISE SHOWN, ALL DIMENSIONS ARE OUT TO OUT OF BARS.
2. USE 1/2" DIAMETER PRESTRESSING STRANDS.
3. PLACE BEARING PLATES AND PADS PERPENDICULAR TO BEAM CENTER LINE.
4. USE COATED REINFORCING BARS CONFORMING TO AASHTO DESIGNATION M 31, GRADE 60.

M

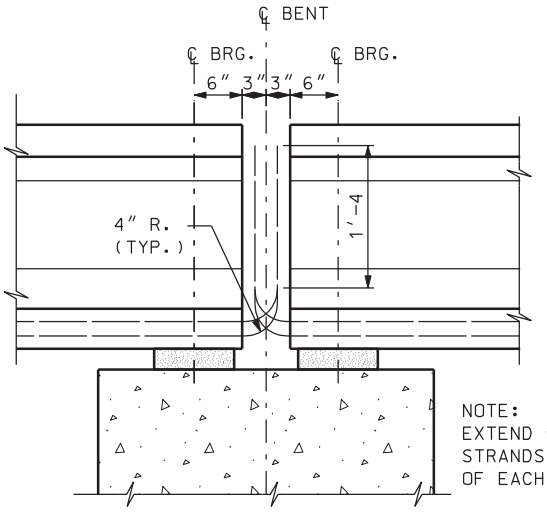


NOTE:
EXTEND 5 PRESTRESSING STRANDS FROM THE END OF EACH BEAM AS SHOWN

BEAM DETAILS AT BENT

## AASHTO TYPE I BEAM

FINAL PRESTRESSING FORCES
AFTER LOSSES = 320.3 kips
$f'_{ci}$ = 4,000
$f'_c$ = 5,000
2 EXTERIOR BEAMS REQUIRED
2 INTERIOR BEAMS REQUIRED

MIN. AREA PRESTRESSING STEEL = 1.99 SQ. IN.

| NO. | DATE | BY | REMARKS |
|---|---|---|---|

REVISIONS

UTAH DEPARTMENT OF TRANSPORTATION
SALT LAKE CITY, UTAH
STRUCTURES DIVISION

DESIGN MDR 12/04 CHECK GG 12/04
DRAWN LM 12/04 CHECK MDR 12/04
QUANT. MDR 12/04 CHECK LM 12/04

APPROVAL RECOMM. DATE SENIOR DESIGN ENGR.
APPROVED FOR USE BY UDOT DATE UDOT BRIDGE ENGR.

I-15; CORRIDOR IN UTAH COUNTY
400 SOUTH OVERPASS IN OREM
BEAM DETAILS; SPAN 2

PROJECT NUMBER SP-15-6(52)241

UTAH
COUNTY

F-16W
DRG. NO.

SHT. 13 OF 21

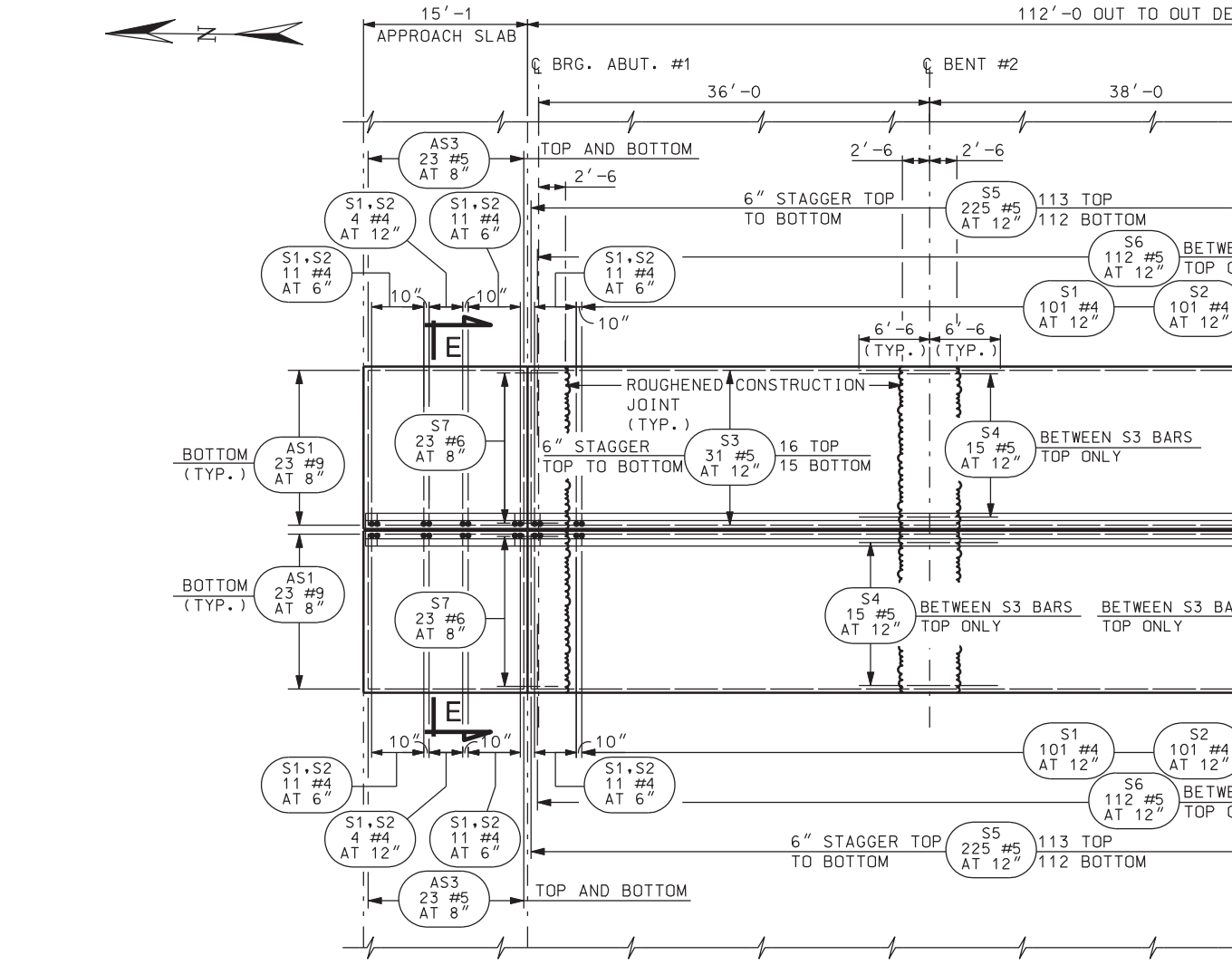


PLAN

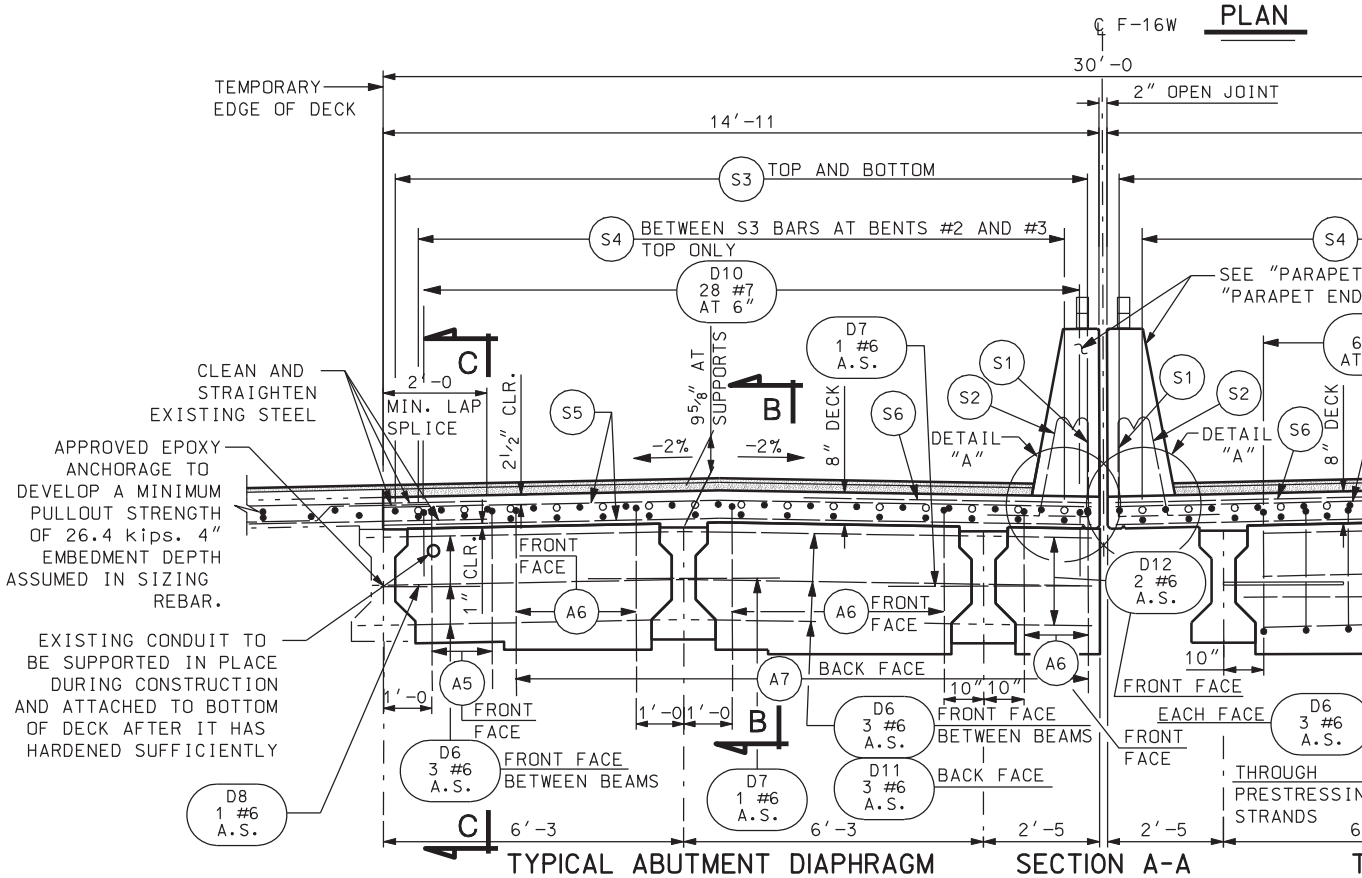


TYPICAL ABUTMENT DIAPHRAGM

SECTION A-A

T

DGN File: N:\Projects\4433.04\Sheet.Files\Structures\F-16W\4433.f-16w-14.deckplan.dgn
05-MAY-2005

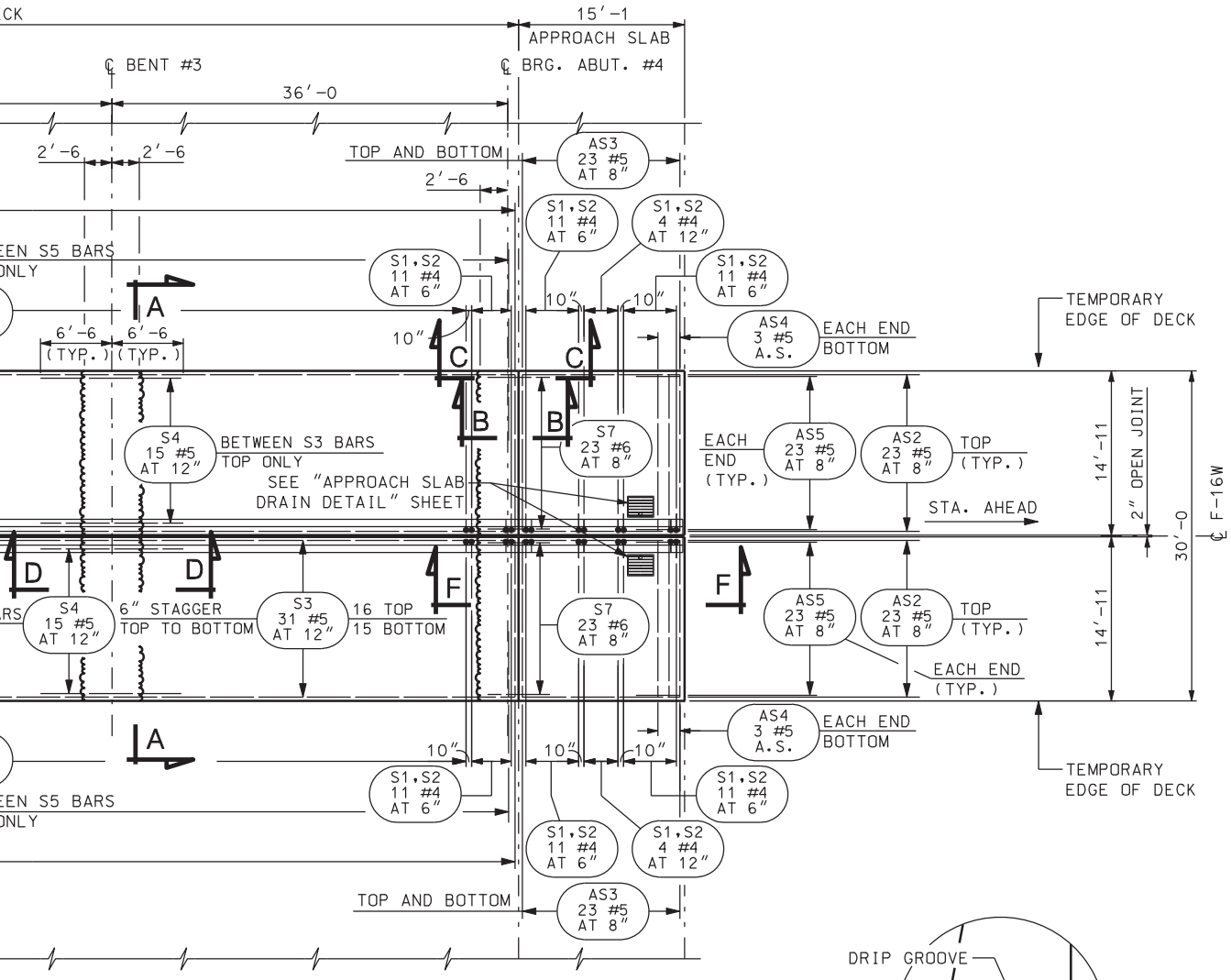


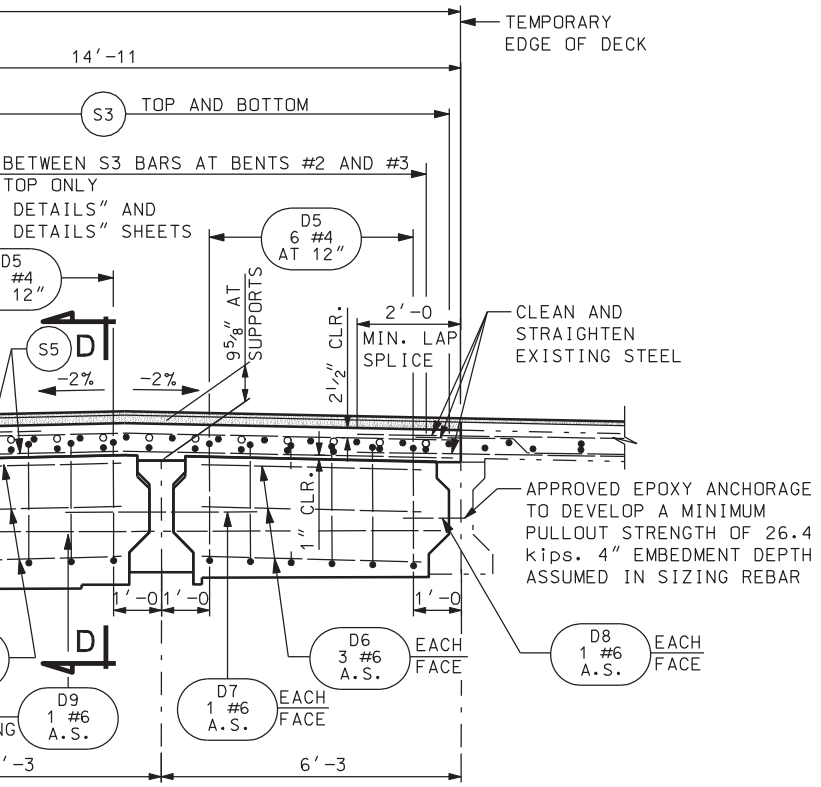


TYPICAL BENT DIAPHRAGM

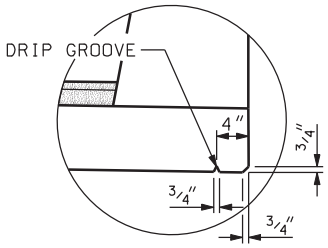


DETAIL "A"

## NOTES:

1. STAY-IN-PLACE FORMS ARE NOT PERMITTED.
2. SEE "DECK & APPROACH SLAB DETAILS" SHEET FOR SECTIONS B-B, C-C, D-D, E-E AND F-F.
3. BAR SPACING IS THE MAXIMUM SPACING. SPACING IS ROUNDED TO THE NEAREST INCH.

## QUANTITIES

| | |
|---|---|
| STRUCTURAL CONCRETE | |
| DECK AND DIAPHRAGMS - N.B. | 58.5 CU. YDS. |
| DECK AND DIAPHRAGMS - S.B. | 58.5 CU. YDS. |
| APPROACH SLABS - NORTHBOUND | 17.9 CU. YDS. |
| APPROACH SLABS - SOUTHBOUND | 17.9 CU. YDS. |
| TOTAL | 152.8 CU. YDS. |

REVISIONS

| NO. | DATE | BY | REMARKS |
|---|---|---|---|
| | | | |

UTAH DEPARTMENT OF TRANSPORTATION
SALT LAKE CITY, UTAH
STRUCTURES DIVISION

DESIGN MDR 12/04 CHECK GG 12/04
DRAWN LM 12/04 CHECK MDR 12/04
QUANT. MDR 12/04 CHECK LM 12/04

APPROVAL RECOMM. DATE SENIOR DESIGN ENGR.
APPROVED FOR USE BY UDOT DATE UDOT BRIDGE ENGR.

I-15; CORRIDOR IN UTAH COUNTY
400 SOUTH OVERPASS IN OREM
DECK PLAN AND SECTION

PROJECT NUMBER SP-15-6(52)241

UTAH
COUNTY

F-16W
DRG. NO.

SHT. 14 OF 21

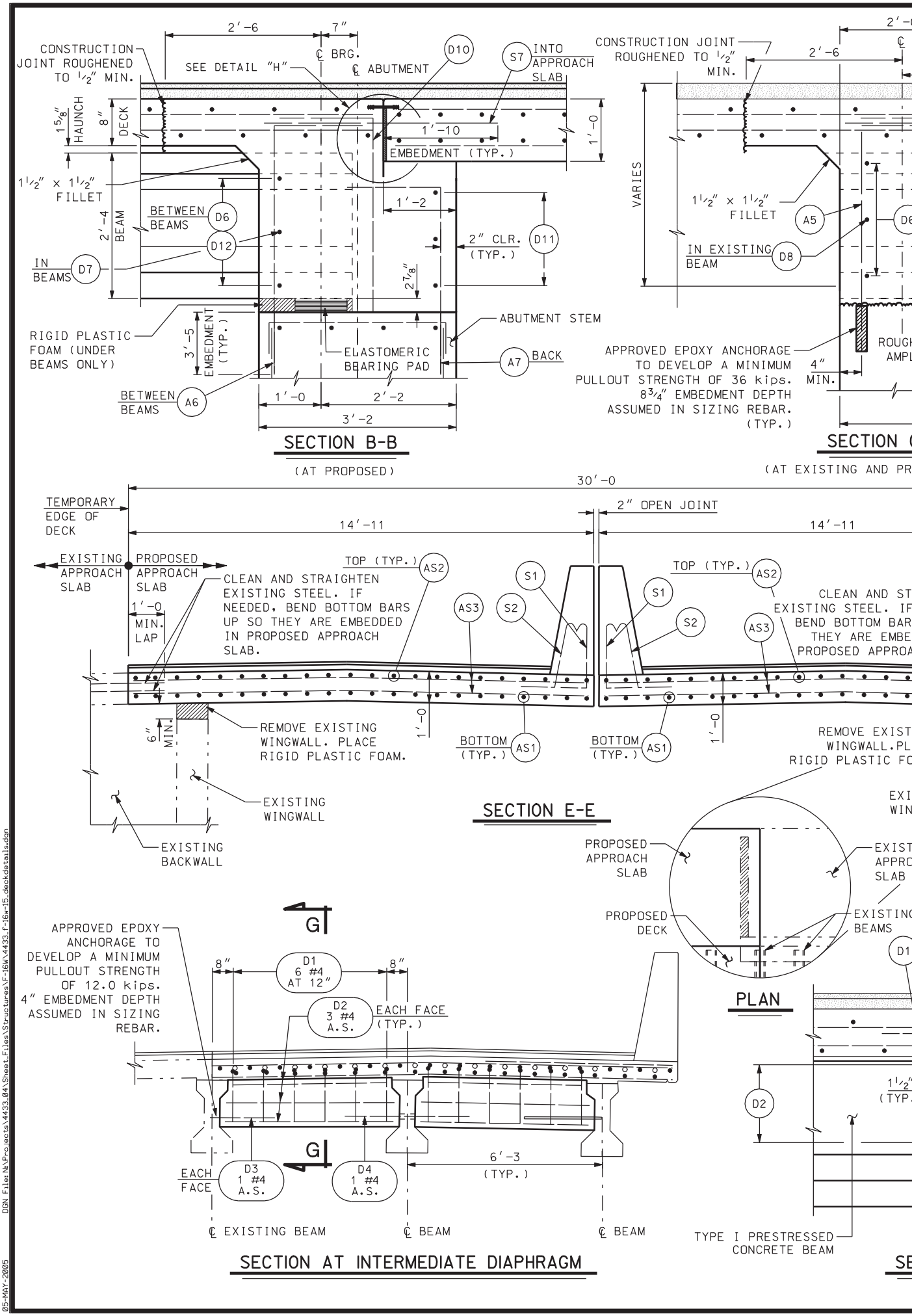


DGN File: N:\Projects\4433.04\Sheet.Files\Structures\F-16W\4433.f-16w-15.deckdetails.dgn

05-MAY-2005

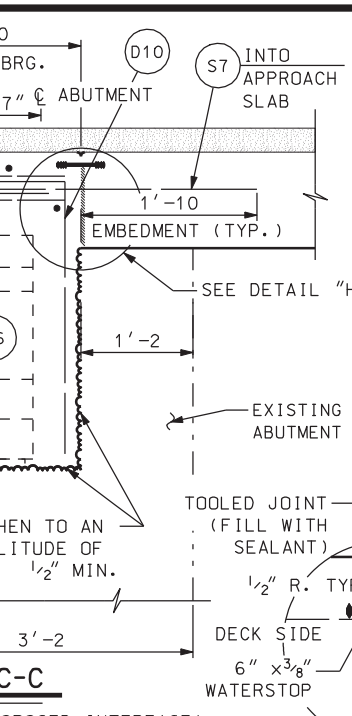


C-C

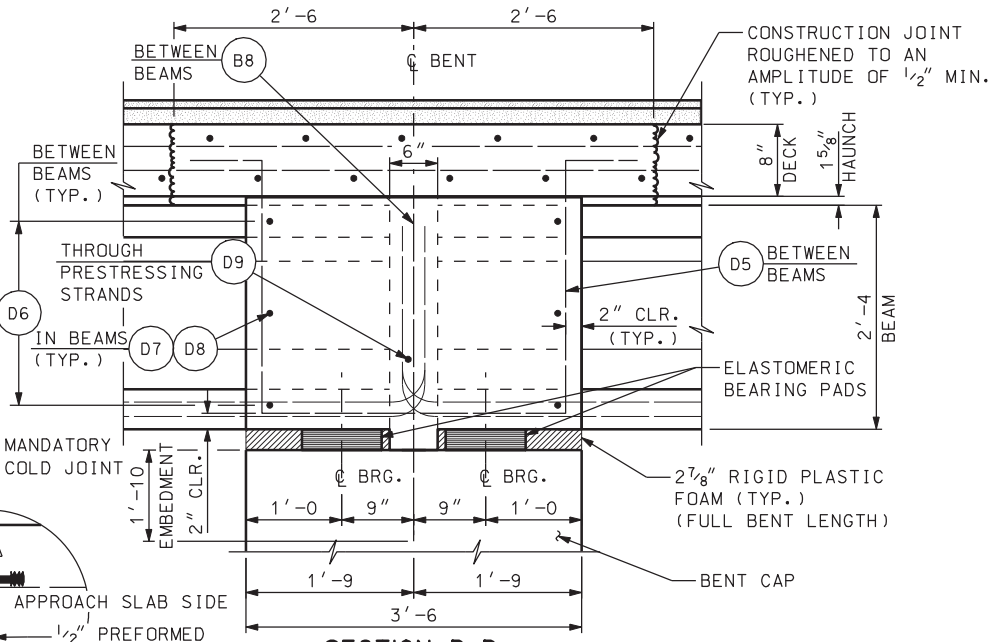


SECTION D-D

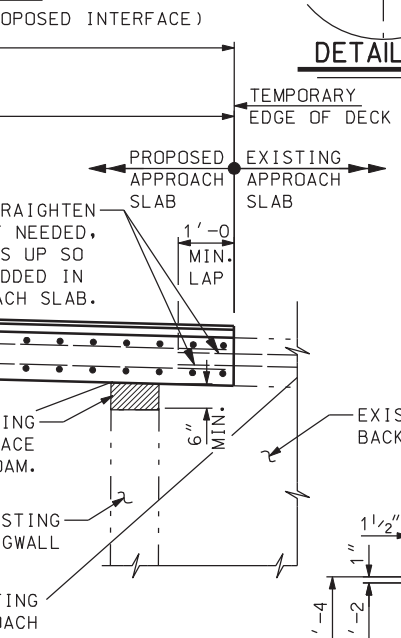


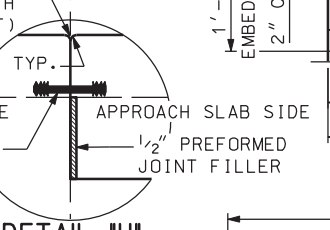


DETAIL "H"

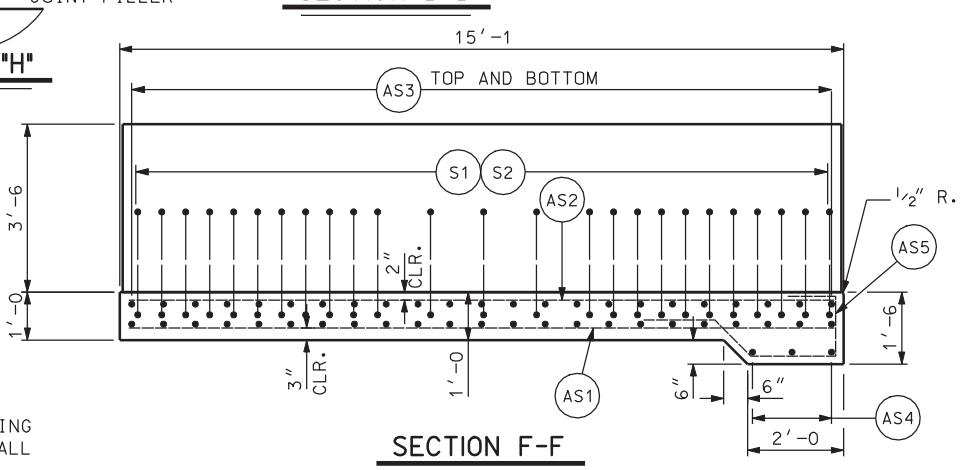


SECTION F-F

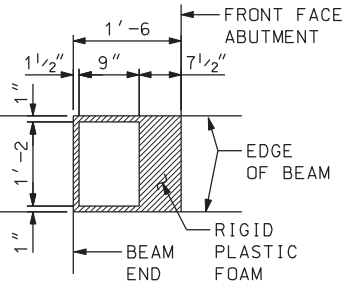


BEARING PAD DETAIL AT ABUTMENTS

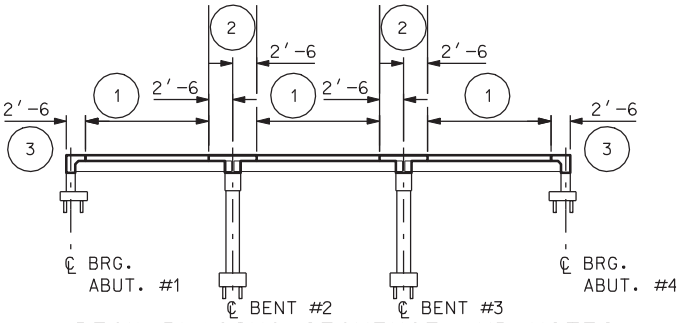


DECK PLACING SEQUENCE AND NOTES

1. ALLOW A MINIMUM OF 72 HOURS CURE TIME AFTER THE FINISH OF A POUR BEFORE STARTING THE NEXT POUR.
2. ALTERNATE POUR SEQUENCES MUST BE APPROVED BY THE ENGINEER.

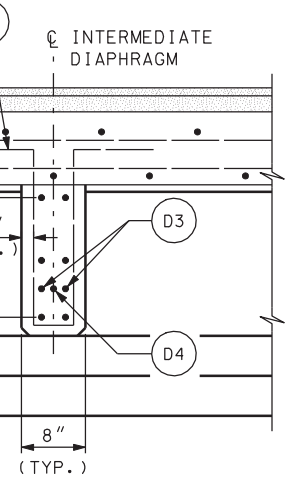


ECTION G-G

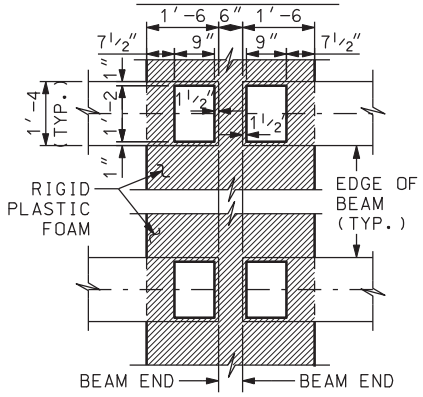


BEARING PAD DETAIL AT BENTS

## NOTES:

1. SEE "DECK PLAN AND SECTION" SHEET FOR LOCATION OF SECTIONS AND DETAILS.
2. SEE "PARAPET DETAILS", "PARAPET END DETAILS" AND "BENT DETAILS" SHEETS FOR ADDITIONAL NOTES AND DETAILS.
3. BAR SPACING IS THE MAXIMUM SPACING. SPACING IS ROUNDED TO THE NEAREST INCH.
4. SEE "FRAMING PLAN" SHEET FOR INTERMEDIATE DIAPHRAGM LOCATIONS.
5. PLACE ALL EPOXY ANCHORAGES INSIDE OF EXISTING REBAR.

| NO. | DATE | BY | REMARKS |
|---|---|---|---|
| | | | |

REVISIONS

UTAH DEPARTMENT OF TRANSPORTATION
SALT LAKE CITY, UTAH
STRUCTURES DIVISION

DESIGN MDR 12/04 CHECK GG 12/04
DRAWN LM 12/04 CHECK MDR 12/04
QUANT. CHECK

APPROVAL RECOMM. DATE SENIOR DESIGN ENGR.
APPROVED FOR USE BY UDOT DATE UDOT BRIDGE ENGR.

I-15: CORRIDOR IN UTAH COUNTY
400 SOUTH OVERPASS IN OREM
DECK & APPROACH SLAB DETAILS

PROJECT NUMBER SP-15-6(52)241

UTAH
COUNTY

F-16W
DRG. NO.

SHT. 15 OF 21

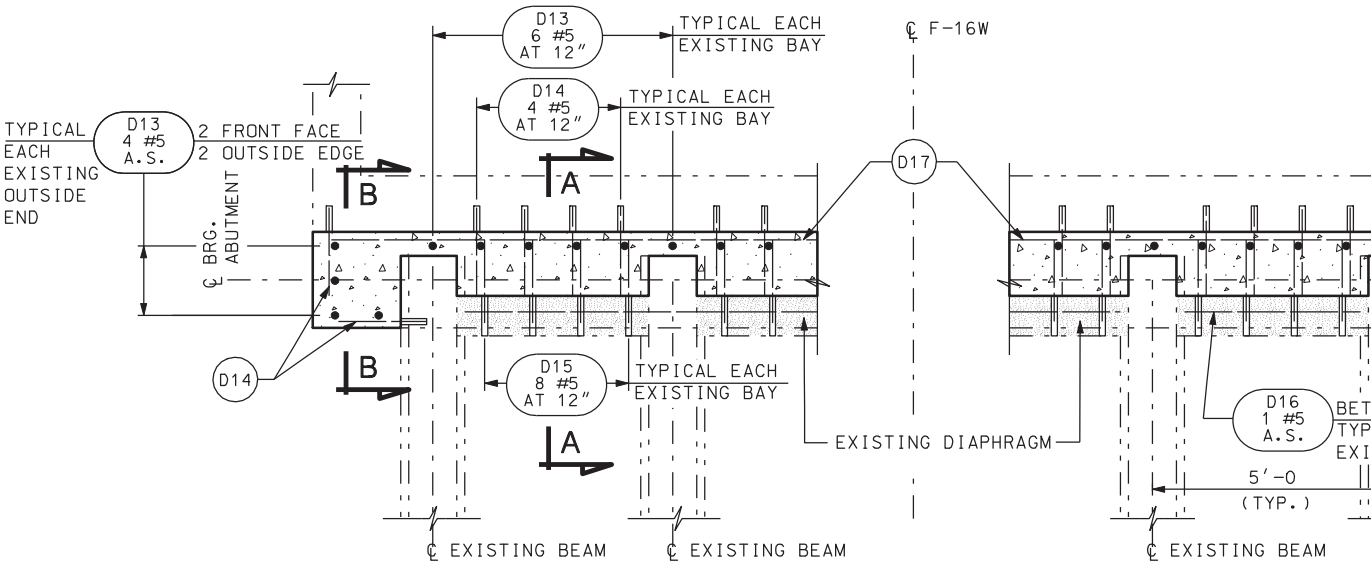


PLAN AT ABUTMENT

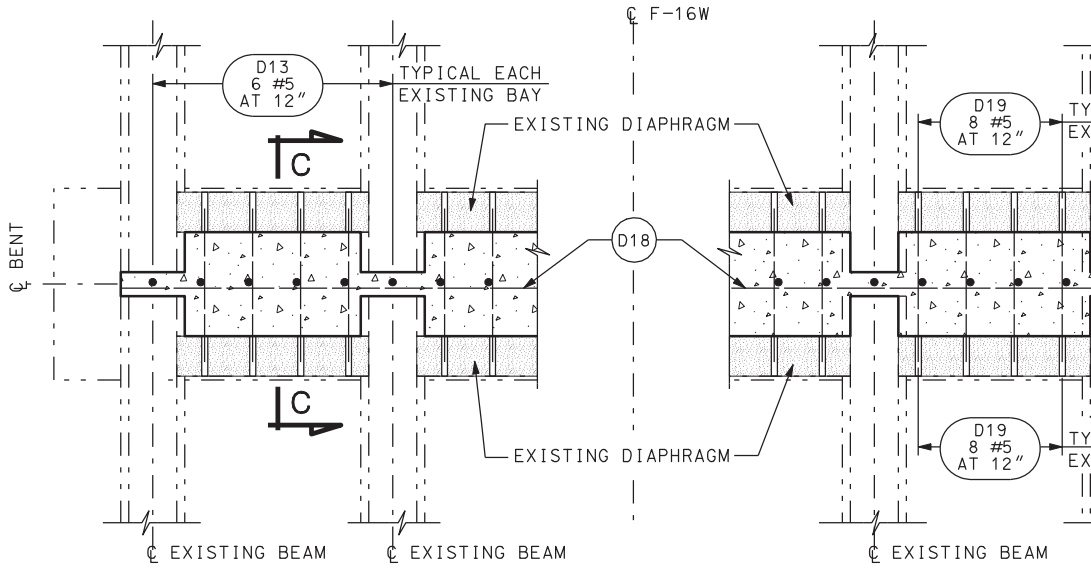


PLAN AT BENT

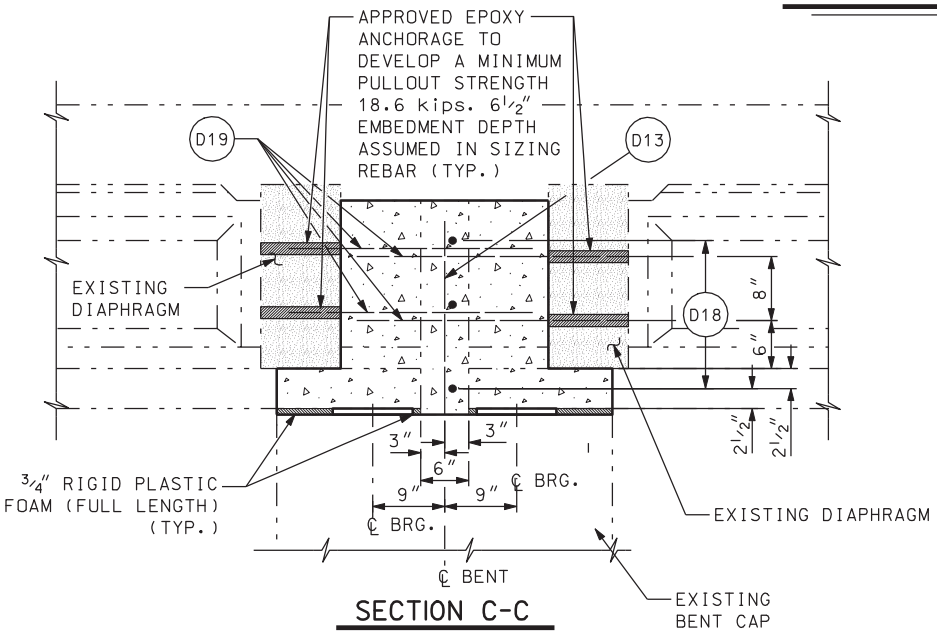


SECTION C-C

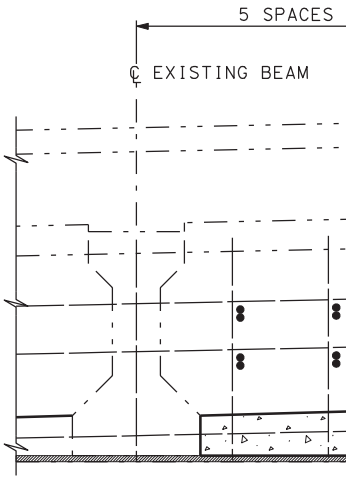


TYPICAL EXISTING E

DGN File: N:\Projects\4433.04\Sheet.Files\Structures\F-16W\4433.f-16w-16.exmodification.dgn
05-MAY-2005

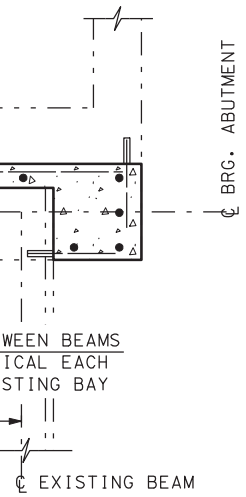


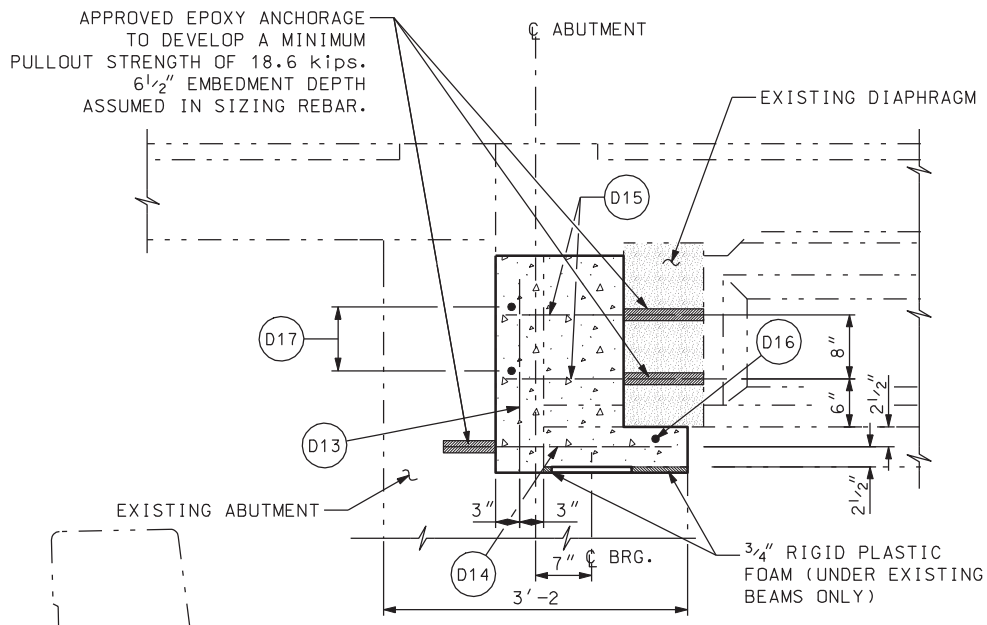


SECTION A-A

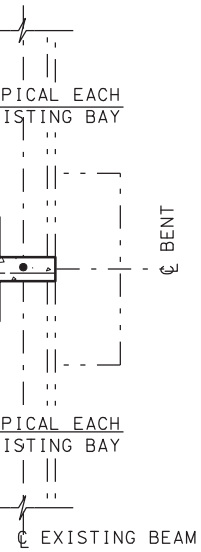


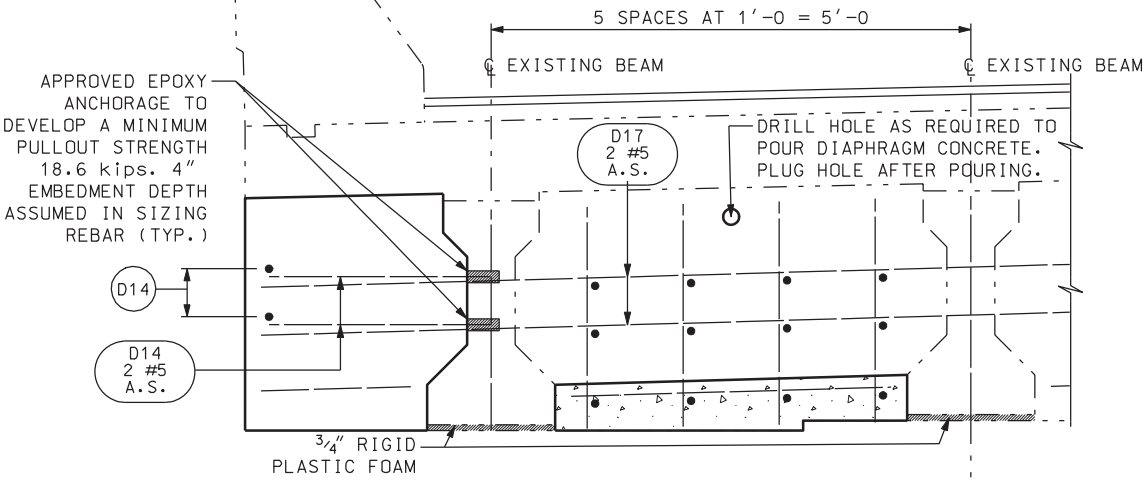


TYPICAL EXISTING INTERIOR BAY ELEVATION AT ABUTMENT

TYPICAL EXISTING INTERIOR BAY ELEVATION AT ABUTMENT

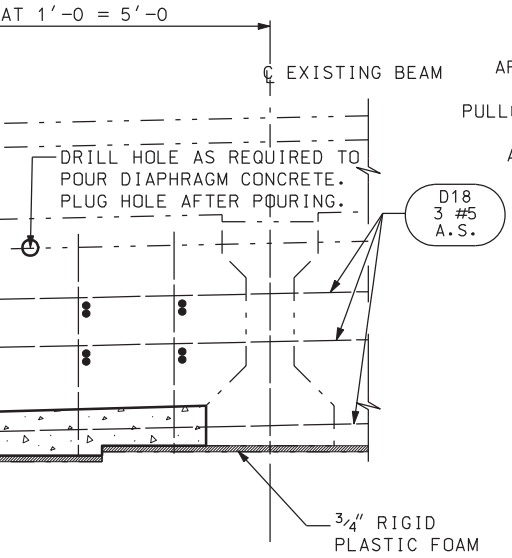


BAY ELEVATION AT BENT

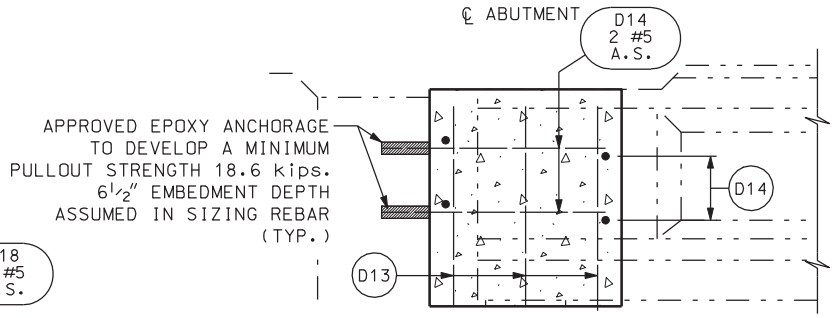


SECTION B-B

## QUANTITIES

| | |
|---|---|
| STRUCTURAL CONCRETE | |
| EXISTING DIAPHRAGM - NORTHBOUND ABUTMENTS | 11.5 CU. YDS. |
| EXISTING DIAPHRAGM - SOUTHBOUND ABUTMENTS | 11.5 CU. YDS. |
| EXISTING DIAPHRAGM - NORTHBOUND BENTS | 17.3 CU. YDS. |
| EXISTING DIAPHRAGM - SOUTHBOUND BENTS | 17.3 CU. YDS. |
| TOTAL | 57.6 CU. YDS. |

| NO. | DATE | BY | REMARKS |
|---|---|---|---|
| | | | |

REVISIONS

UTAH DEPARTMENT OF TRANSPORTATION
SALT LAKE CITY, UTAH
STRUCTURES DIVISION

DESIGN MDR 12/04 CHECK GG 12/04
DRAWN LM 12/04 CHECK MDR 12/04
QUANT. MDR 12/04 CHECK LM 12/04

APPROVAL RECOMM. DATE SENIOR DESIGN ENGR.
APPROVED FOR USE BY UDOT DATE UDOT BRIDGE ENGR.

I-15; CORRIDOR IN UTAH COUNTY
400 SOUTH OVERPASS IN OREM
EXISTING DIAPHRAGM MODIFICATIONS

PROJECT NUMBER SP-15-6(52)241

UTAH
COUNTY

F-16W
DRG. NO.

SHT. 16 OF 21

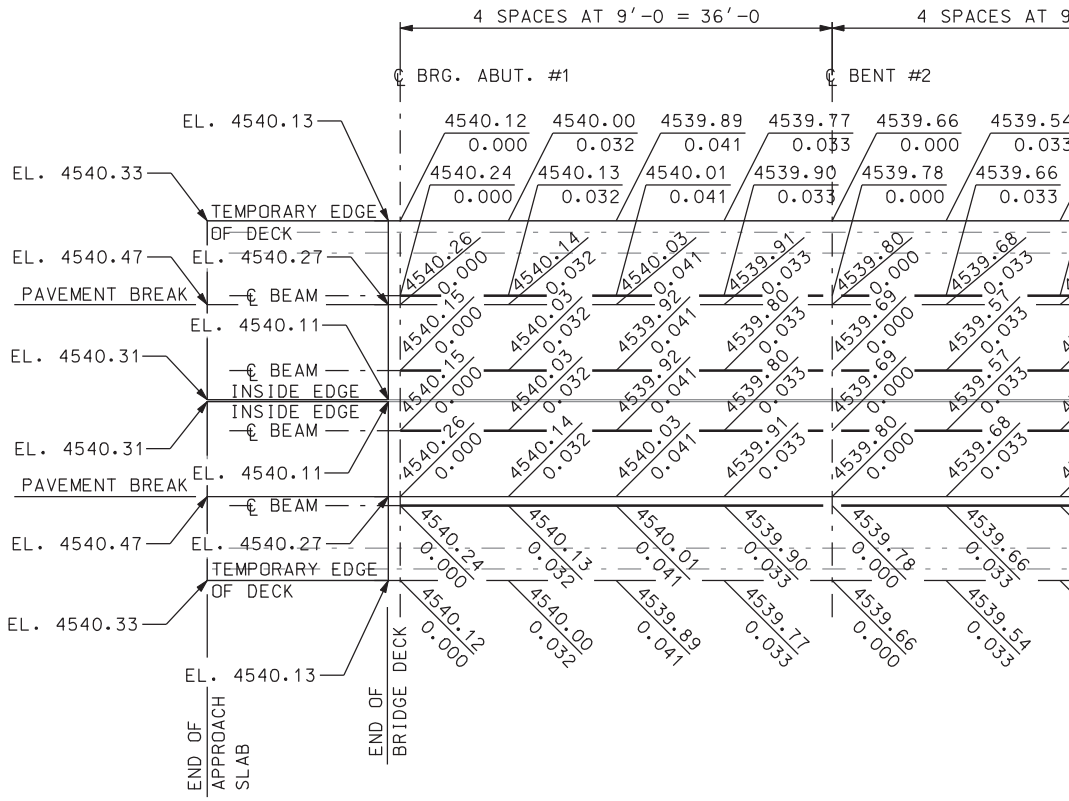


SCREED EL

DGN File:N:\Projects\4433.04\Sheet.Files\Structures\F-16W\4433.f-16w-17_screed.dgn

05-MAY-2005

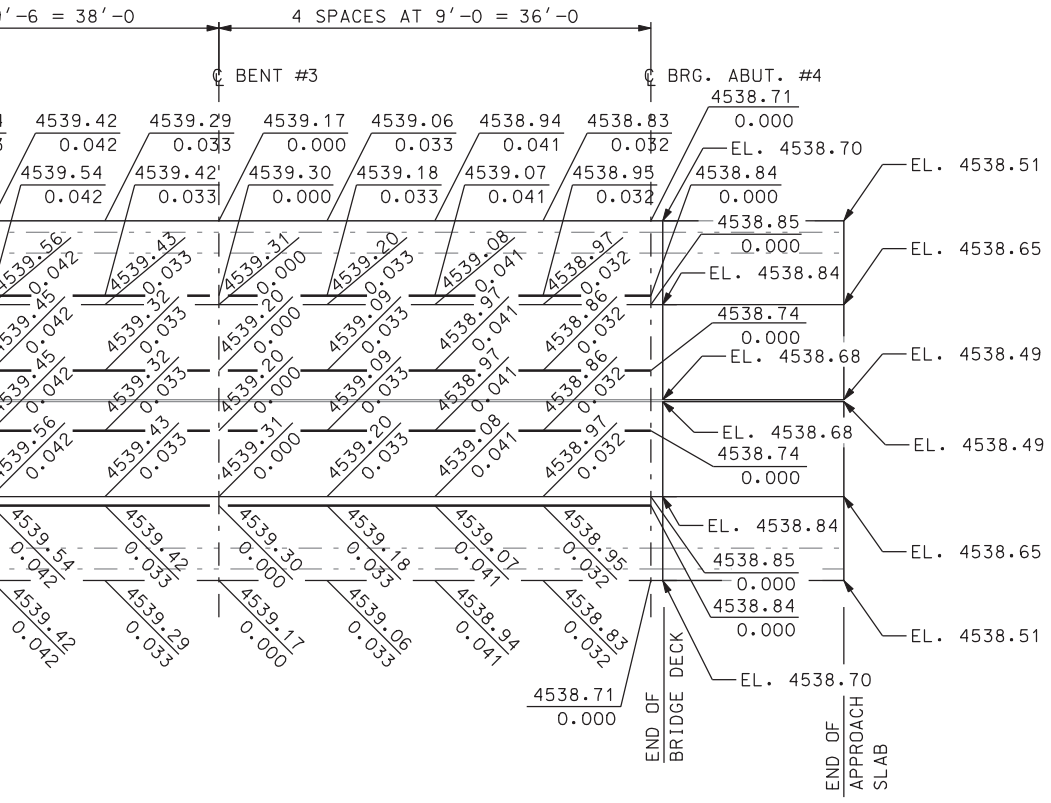


EVATIONS

## NOTES:

1. FIGURES ABOVE THE LINE ARE TOP OF CONCRETE ELEVATIONS. FIGURES BELOW THE LINE ARE DEAD LOAD DEFLECTIONS OF THE DECK AND ARE TO BE ADDED TO THE TOP OF CONCRETE ELEVATIONS TO OBTAIN SCREED ELEVATIONS.

2. ALL DIMENSIONS SHOWN ARE IN FEET AND INCHES. ALL ELEVATIONS AND DEAD LOAD DEFLECTIONS ARE SHOWN IN FEET.

REVISIONS

| NO. | DATE | BY | REMARKS |
|---|---|---|---|
| | | | |

UTAH DEPARTMENT OF TRANSPORTATION
SALT LAKE CITY, UTAH
STRUCTURES DIVISION

DESIGN MDR 12/04 CHECK GG 12/04
DRAWN LM 12/04 CHECK MDR 12/04
QUANT. CHECK

APPROVAL RECOMM. DATE SENIOR DESIGN ENGR.
APPROVED FOR USE BY UDOT DATE UDOT BRIDGE ENGR.

I-15: CORRIDOR IN UTAH COUNTY
400 SOUTH OVERPASS IN OREM
SCREED ELEVATIONS

PROJECT NUMBER SP-15-6(52)241

UTAH
COUNTY

F-16W
DRG. NO.

SHT. 17 OF 21

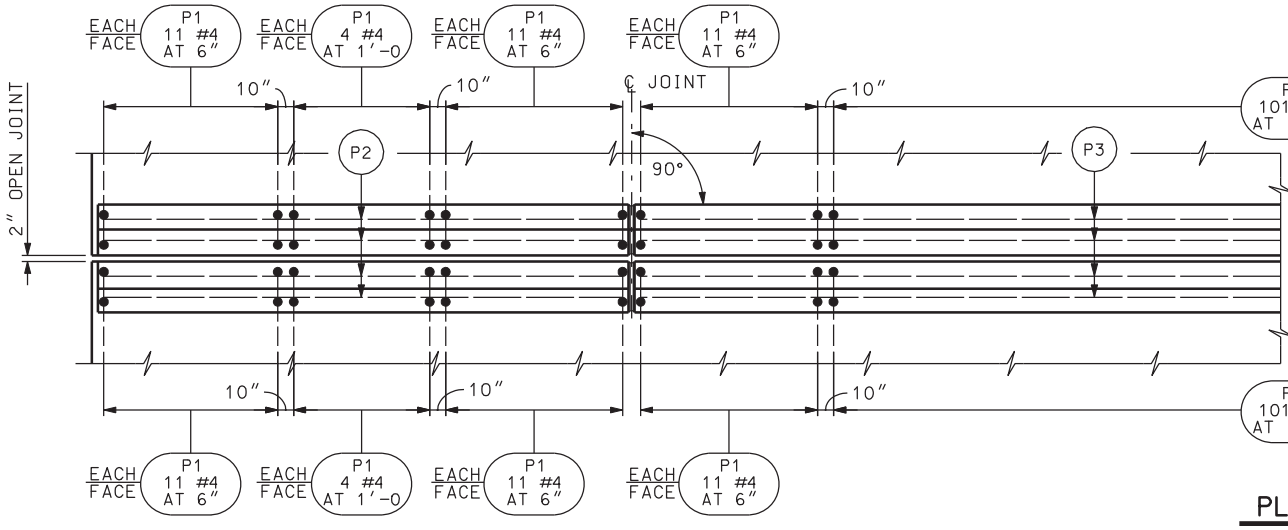


PL

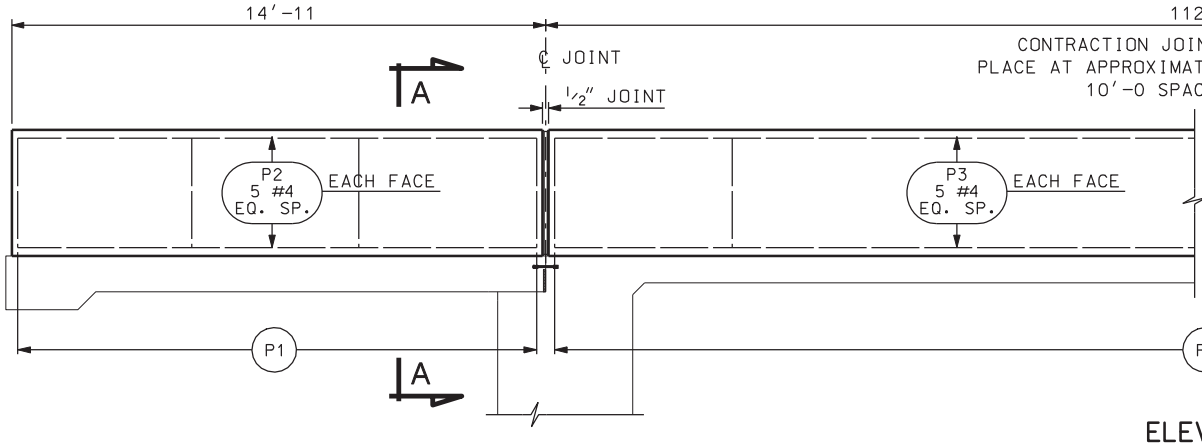


ELEV

(ALL DIMENSIONS SHOWN

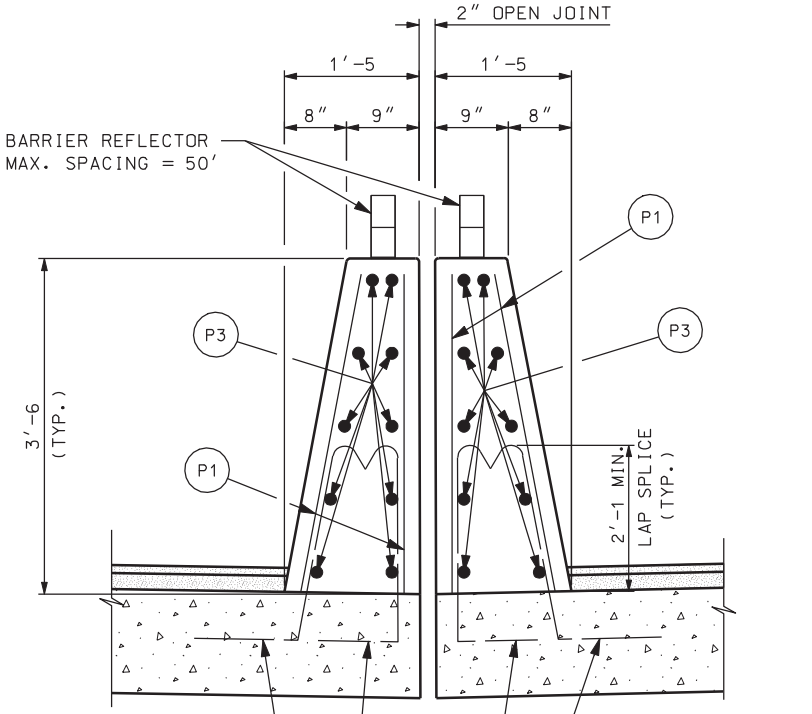


SECTION A-A

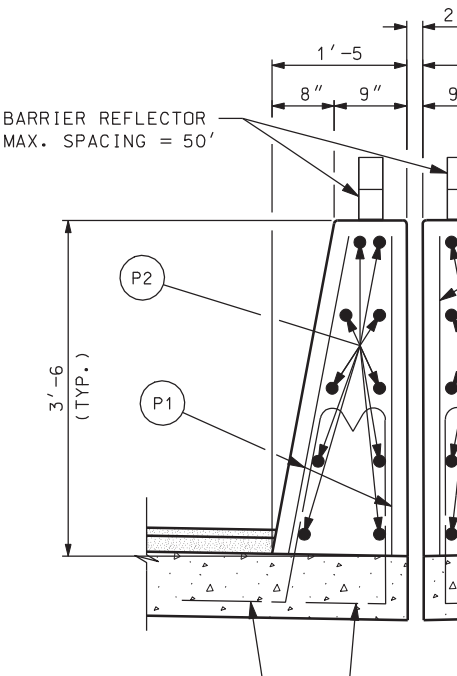


SECTION

DGN File: N:\Projects\4433.04\Sheet.Files\Structures\F-16W\4433.f-16w-18_parapet.dgn
05-MAY-2005

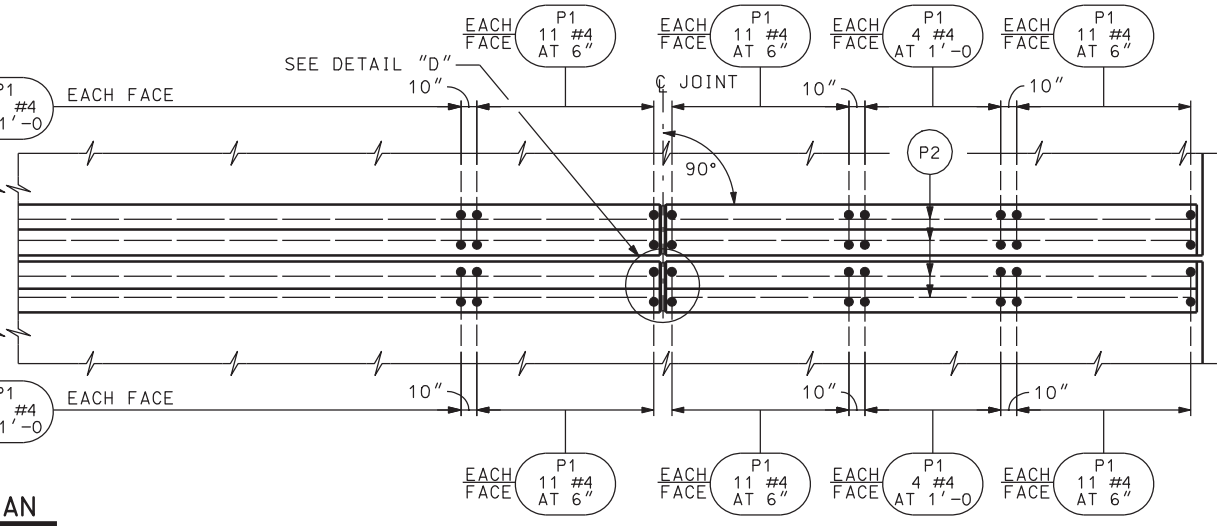


AN

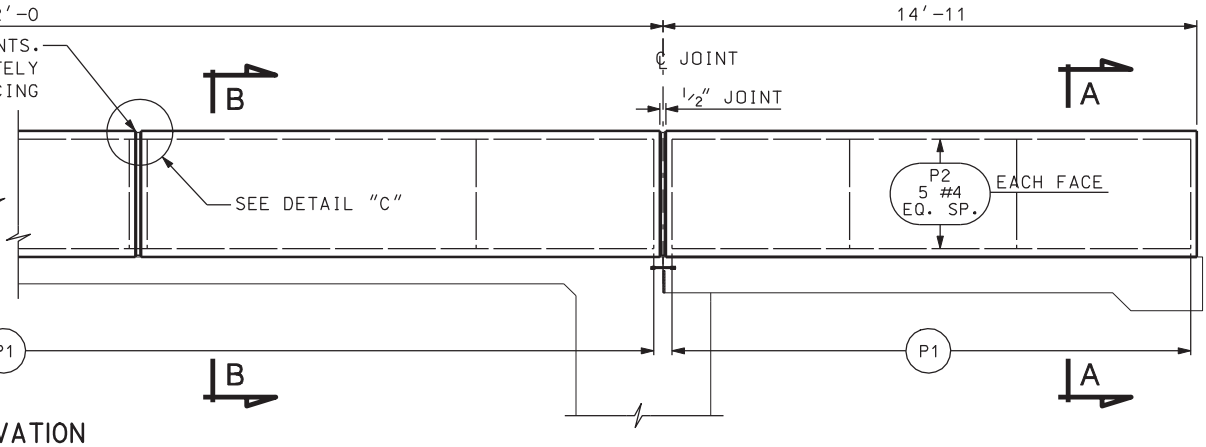


VATION

(ARE ALONG EDGE OF DECK)

" OPEN JOINT

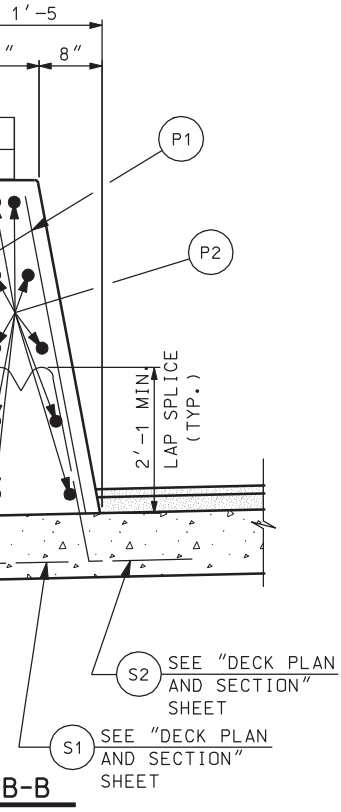


B-B

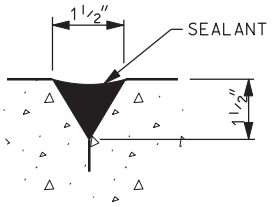


DETAIL "C"

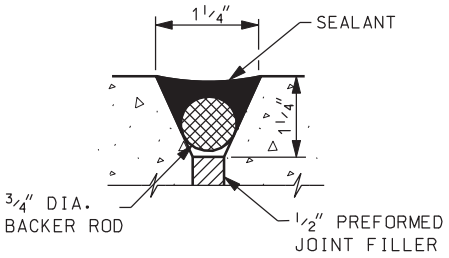


DETAIL "D"

## NOTES

1. ALTERNATE ALL REINFORCING STEEL SPLICES.
2. PROVIDE 2" MIN. COVER TO REINFORCING STEEL UNLESS NOTED OTHERWISE.
3. PLACE CONTRACTION JOINT ON SIDES AND TOP OF PARAPET.
4. EXTEND SEALANT FROM DECK TO TOP OF PARAPET ON THE INSIDE PARAPET FACE AND ACROSS TOP OF PARAPET.
5. BAR SPACING IS THE MAXIMUM SPACING. SPACING IS ROUNDED TO THE NEAREST INCH.

| QUANTITIES | |
|---|---|
| STRUCTURAL CONCRETE | |
| PARAPETS - NORTHBOUND | 19.9 CU. YDS. |
| PARAPETS - SOUTHBOUND | 19.9 CU. YDS. |
| TOTAL | 39.8 CU. YDS. |

| NO. | DATE | BY | REMARKS |
|---|---|---|---|
| | | | |

REVISIONS

UTAH DEPARTMENT OF TRANSPORTATION
SALT LAKE CITY, UTAH
STRUCTURES DIVISION

DESIGN MDR 12/04 CHECK GG 12/04
DRAWN LM 12/04 CHECK MDR 12/04
QUANT. MDR 12/04 CHECK LM 12/04

APPROVAL RECOMM. DATE SENIOR DESIGN ENGR.
APPROVED FOR USE BY UDOT DATE UDOT BRIDGE ENGR.

I-15: CORRIDOR IN UTAH COUNTY
400 SOUTH OVERPASS IN OREM
PARAPET DETAILS

PROJECT NUMBER SP-15-6(52)241

UTAH
COUNTY

F-16W
DRG. NO.

SHT. 18 OF 21

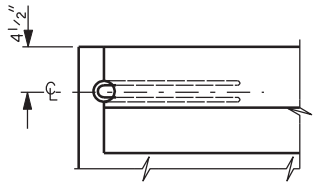


PLAN

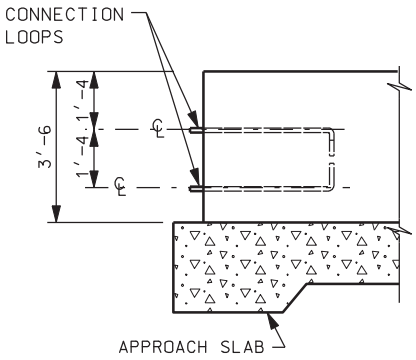


ELEVATION

STANDARD END DETAILS

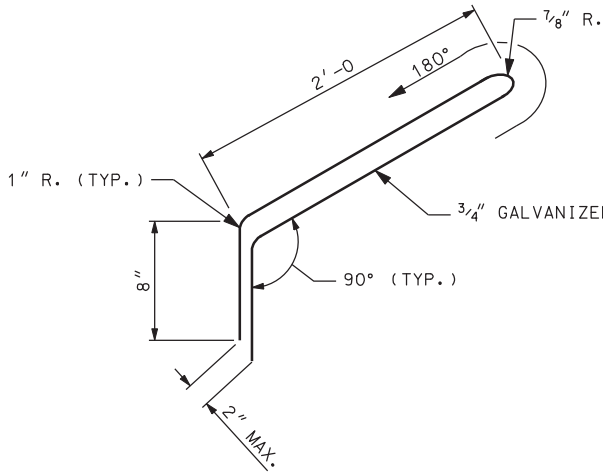


CONNECTION LOOP DETAI

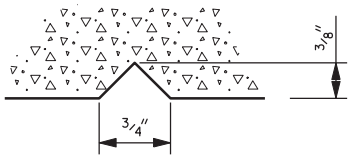


TYPICAL SECTION

THRU STRUCTURE NUMBER

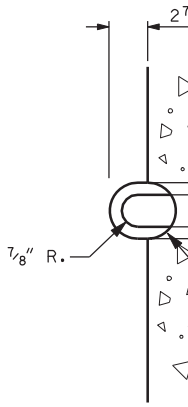


CON

DGN File:N:\Projects\4433.04\Sheet.Files\Structures\F-16W\4433.f-16w19.parapend.dgn
05-MAY-2005

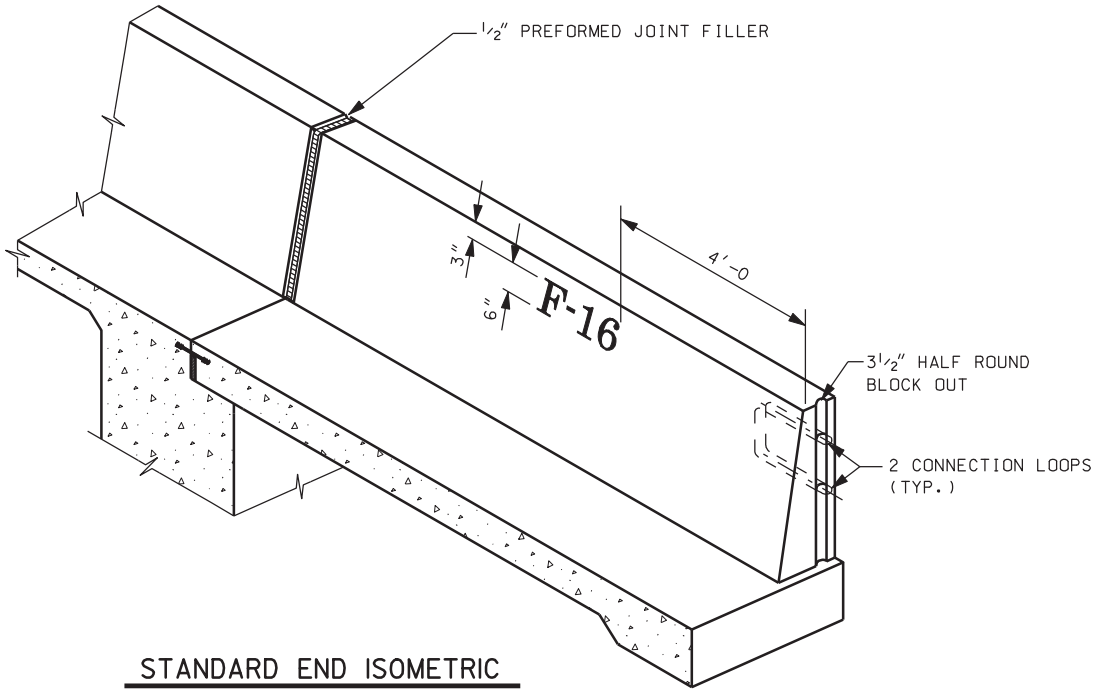


STANDARD END ISOMETRIC

D STEEL BAR

L

/8"

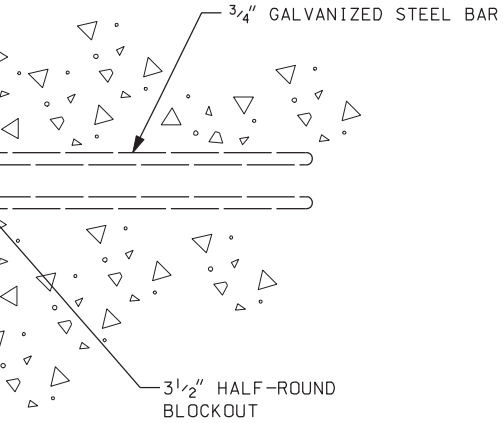


NECTION BAR END DETAIL

## NOTES:

1. INSTALL CONNECTION LOOPS AT ALL PARAPET ENDS.
2. CONNECTION LOOPS NOT INCLUDED IN REINFORCING STEEL SCHEDULE.

| NO. | DATE | BY | REMARKS |
|---|---|---|---|

REVISIONS

UTAH DEPARTMENT OF TRANSPORTATION
SALT LAKE CITY, UTAH
STRUCTURES DIVISION

DESIGN MDR 12/04 CHECK GG 12/04
DRAWN LM 12/04 CHECK MDR 12/04
QUANT. CHECK

APPROVAL RECOMM. DATE SENIOR DESIGN ENGR.
APPROVED FOR USE BY UDOT DATE UDOT BRIDGE ENGR.

I-15: CORRIDOR IN UTAH COUNTY
400 SOUTH OVERPASS IN OREM
PARAPET END DETAILS

PROJECT NUMBER SP-15-6(52)241

UTAH
COUNTY

F-16W
DRG. NO.

SHT. 19 OF 21

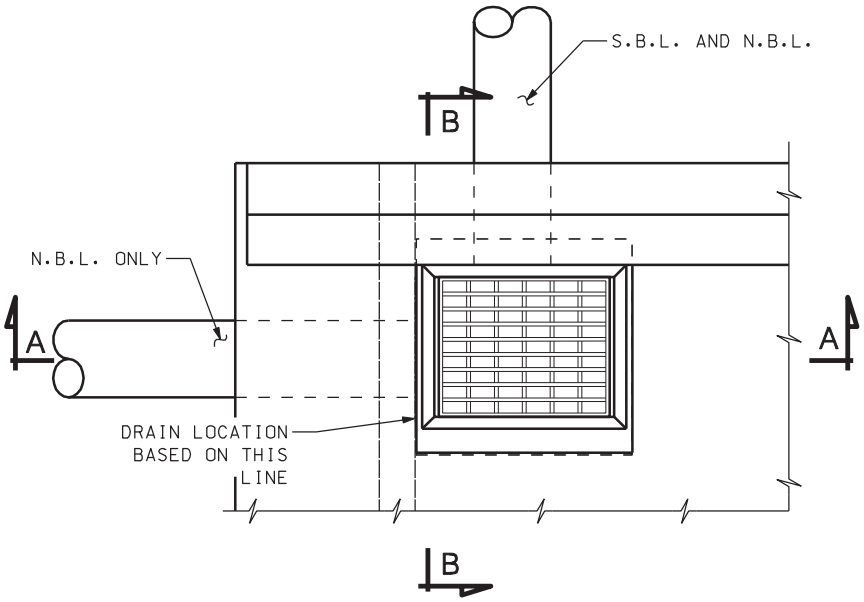


TYPICAL PLAN

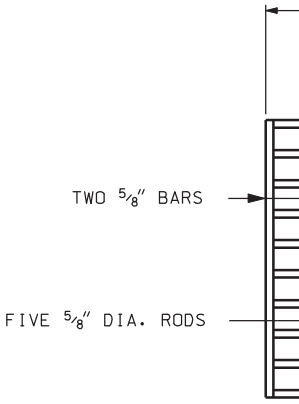

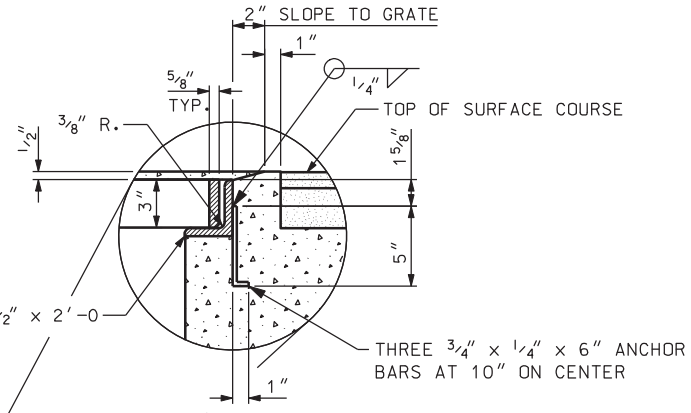


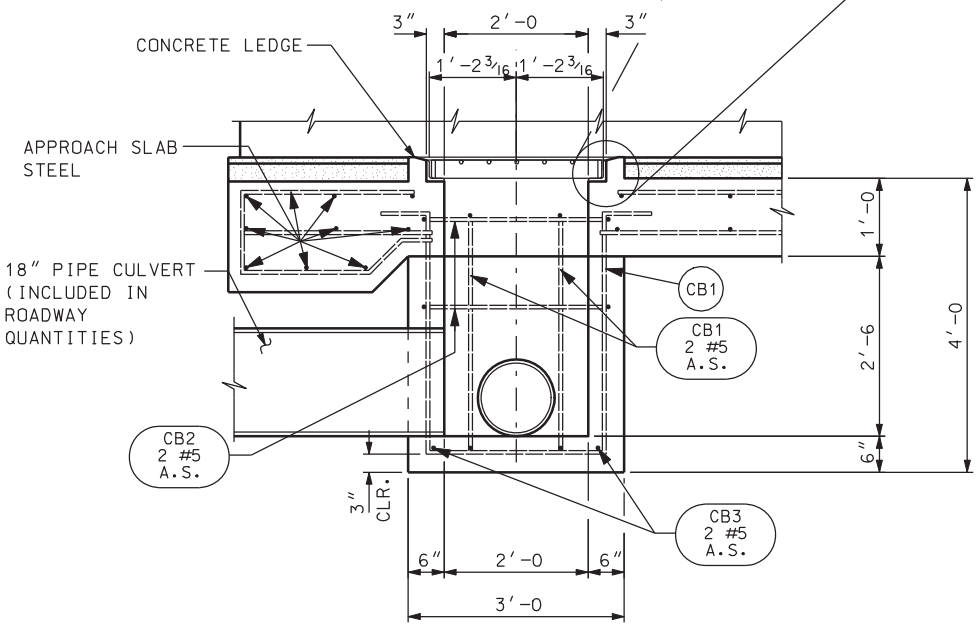


SECTION A-A

12" DIA. PIPE CULVERT
(INCLUDED IN ROADWAY
QUANTITIES)

DGN File: N:\Projects\4433.04\Sheet.Files\Structures\F-16W\4433.f-16w-20.sgprdrain.dgn
05-MAY-2005

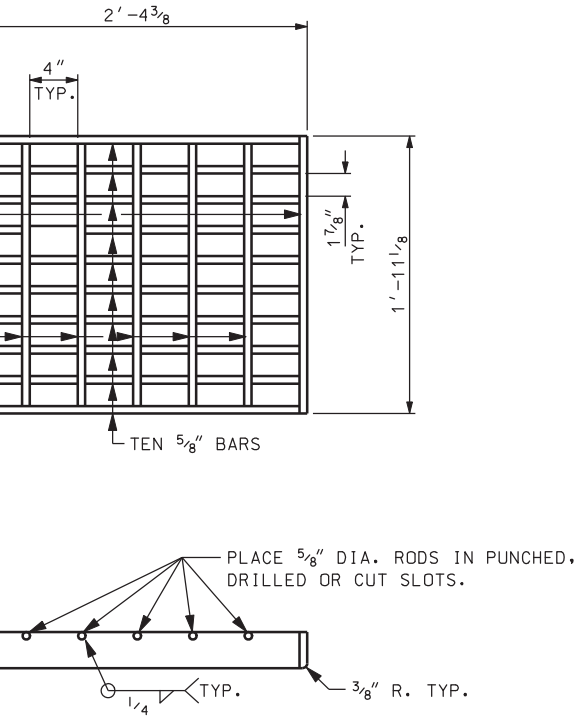


GRATE DETAIL

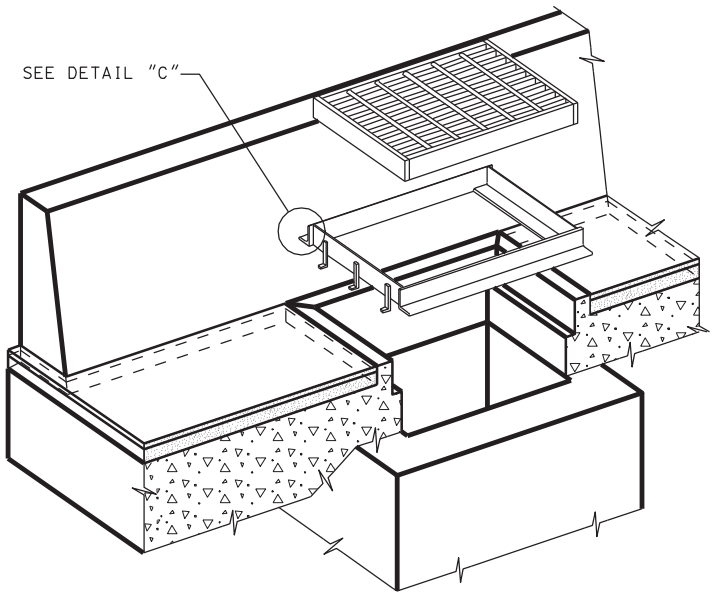


ISOMETRIC

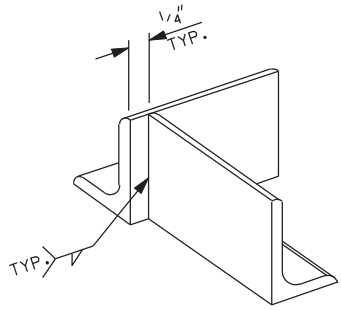


DETAIL "C"

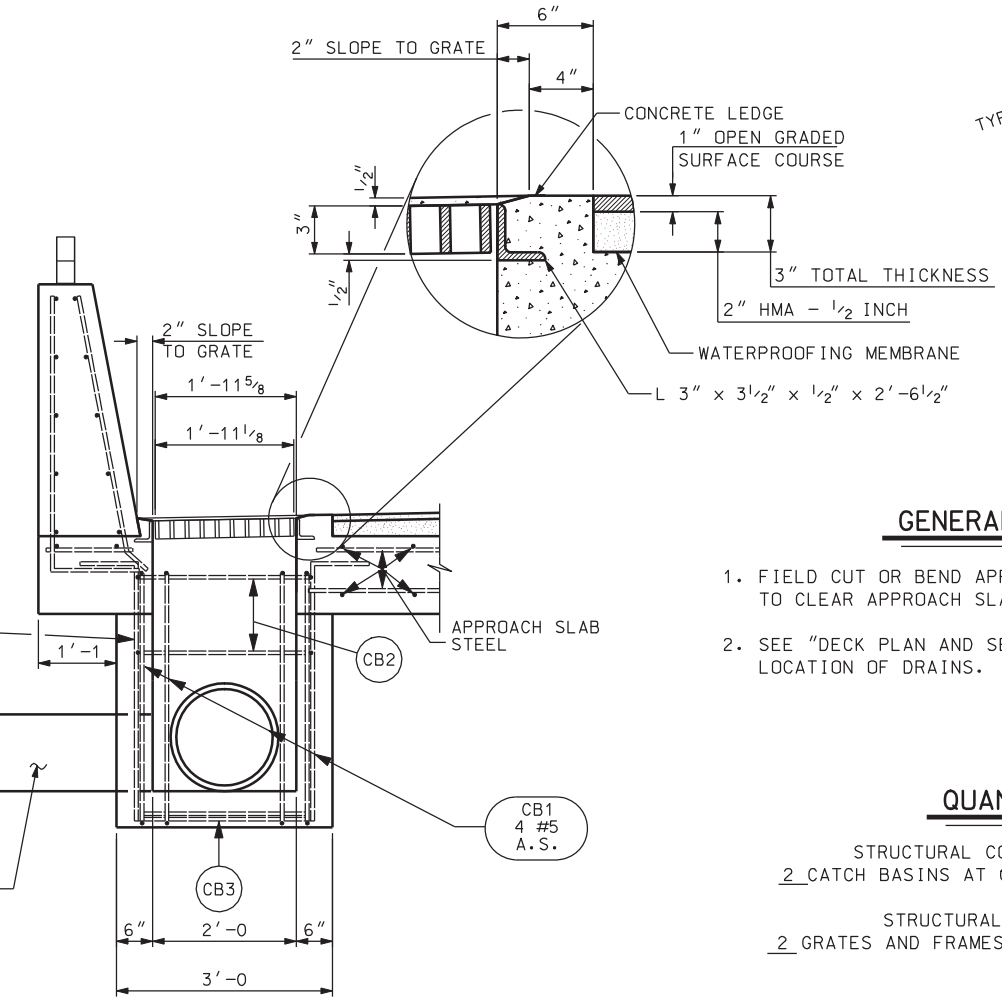


SECTION B-B

## GENERAL NOTES

1. FIELD CUT OR BEND APPROACH SLAB REINFORCING TO CLEAR APPROACH SLAB DRAINS.
2. SEE "DECK PLAN AND SECTION" SHEET FOR ACTUAL LOCATION OF DRAINS.

## QUANTITIES

STRUCTURAL CONCRETE QUANTITIES
2 CATCH BASINS AT 0.6 CU. YDS. = 1.2 YDS.

STRUCTURAL STEEL QUANTITY
2 GRATES AND FRAMES AT 273 LBS. = 546 LBS.

| NO. | DATE | BY | REMARKS |
|---|---|---|---|

REVISIONS

UTAH DEPARTMENT OF TRANSPORTATION
SALT LAKE CITY, UTAH
STRUCTURES DIVISION

DESIGN MDR 12/04 CHECK GG 12/04
DRAWN LM 12/04 CHECK MDR 12/04
QUANT. MDR 12/04 CHECK LM 12/04

APPROVAL RECOMM. DATE SENIOR DESIGN ENGR.
APPROVED FOR USE BY UDOT DATE UDOT BRIDGE ENGR.

I-15; CORRIDOR IN UTAH COUNTY
400 SOUTH OVERPASS IN OREM
APPROACH SLAB DRAIN DETAILS

PROJECT NUMBER SP-15-6(52)241

UTAH
COUNTY

F-16W
DRG. NO.

SHT. 20 OF 21

| MARK | LOCATION | SIZE NO. | NO. BARS | LENGTH | TOTAL LENGTH | SKETCH |
|---|---|---|---|---|---|---|
| F1 | FOOTING | 7 | 76 | 11′-1 | 842′-4 | 3′-8, 7′-5 |
| F2 | FOOTING | 7 | 76 | 12′-3 | 931′-0 | 4′-10, 7′-5 |
| F3 | FOOTING | 5 | 42 | 9′-0 | 378′-0 | |
| F4 | FOOTING | 7 | 76 | 5′-8 | 430′-8 | |
| F5 | FOOTING | 5 | 42 | 3′-2 | 133′-0 | |
| F6 | FOOTING | 9 | 144 | 7′-2 | 1,032′-0 | |
| F7 | FOOTING | 9 | 112 | 10′-8 | 1,194′-8 | |
| F8 | FOOTING | 5 | 184 | 4′-1 | 751′-4 | 0′-8, 135°, ϕ, 0′-10, HOOK DIAMETER ϕ= 0′-3, 2′-7 |
| A1 | ABUTMENT | 5 | 56 | 12′-0 | 672′-0 | |
| A2 | ABUTMENT | 5 | 8 | 9′-0 | 72′-0 | |
| A3 | ABUTMENT | 7 | 24 | 6′-5 | 154′-0 | |
| A4 | ABUTMENT | 4 | 100 | 4′-2 | 416′-8 | 0′-8, 0′-8, 2′-10 |
| A5 | ABUTMENT | 7 | 12 | 4′-8 | 56′-0 | 1′-2, 3′-6 |
| A6 | ABUTMENT | 7 | 80 | 7′-8 | 613′-4 | 1′-2, 6′-6 |
| A7 | ABUTMENT | 7 | 100 | 6′-4 | 633′-4 | 1′-2, 5′-2 |
| A8 | ABUTMENT | 5 | 56 | 3′-2 | 177′-4 | |
| A9 | ABUTMENT | 7 | 24 | 5′-0 | 120′-0 | |
| C1 | COLUMN | 9 | 64 | 23′-6 | 1,504′-0 | 1′-8, 1′-8, 20′-2 |
| C2 | COLUMN | 5 | 1024 | 4′-2 | 4,266′-8 | 0′-8, 135°, ϕ, 0′-10, HOOK DIAMETER ϕ= 0′-3, 2′-8 |
| C3 | COLUMN | 5 | 256 | 11′-8 | 2,986′-8 | 0′-6, 2′-8, 2′-8 |
| B1 | BENT | 9 | 40 | 13′-1 | 523′-4 | 1′-5, 5′-11, 4′-2, 1′-5, 5′-9, 3′-0, 3′-11 |
| B2 | BENT | 8 | 16 | 12′-7 | 201′-4 | |
| B3 | BENT | 9 | 40 | 15′-11 | 636′-8 | 1′-8, 1′-8, 12′-7 |
| B4 | BENT | 5 | 92 | 4′-10 | 444′-8 | 0′-10, 0′-10, 3′-2 |

| MARK | LOCATION | SIZE NO. | NO. BARS | LENGTH | TOTAL LENGTH |
|---|---|---|---|---|---|
| B5 | BENT | 5 | 24 | 10′-5 | 250′- |
| | | | | | |
| B6 | BENT | 5 | 16 | 9′-7 | 153′- |
| B7 | BENT | 5 | 32 | 9′-4 | 298′- |
| | | | | | G BAR H SET |
| B8 | BENT | 5 | 52 | 4′-6 | 234′- |
| B9 | BENT | 8 | 12 | 4′-10 | 58′- |
| | | | | | |
| B10 | BENT | 5 | 56 | 8′-0 | 448′- |
| B11 | BENT | 5 | 56 | 8′-3 | 462′- |
| | | | | | G BAR H SET |
| S1 | SLAB | 4 | 350 | 3′-9 | 1,312′ |
| | | | | | HOO |
| S2 | SLAB | 4 | 350 | 3′-9 | 1,312′ |
| S3 | SLAB | 5 | 62 | 114′-3 | 7,083′- |
| S4 | SLAB | 5 | 60 | 13′-0 | 780′- |
| S5 | SLAB | 5 | 450 | 14′-6 | 6,525′ |
| S6 | SLAB | 5 | 224 | 4′-9 | 1,064′ |
| S7 | SLAB | 6 | 92 | 3′-8 | 337′- |
| D1 | DIAPHRAGM | 4 | 72 | 5′-3 | 378′- |
| D2 | DIAPHRAGM | 4 | 72 | 4′-11 | 354′- |
| D3 | DIAPHRAGM | 4 | 12 | 2′-10 | 34′- |
| D4 | DIAPHRAGM | 4 | 6 | 5′-6 | 33′- |
| D5 | DIAPHRAGM | 4 | 48 | 9′-6 | 456′- |
| D6 | DIAPHRAGM | 6 | 72 | 4′-7 | 330′- |
| D7 | DIAPHRAGM | 6 | 16 | 7′-10 | 125′- |
| D8 | DIAPHRAGM | 6 | 12 | 4′-0 | 48′- |
| D9 | DIAPHRAGM | 6 | 4 | 12′-8 | 50′- |
| D10 | DIAPHRAGM | 7 | 112 | 4′-2 | 466′- |
| D11 | DIAPHRAGM | 6 | 12 | 14′-6 | 174′- |
| D12 | DIAPHRAGM | 6 | 8 | 1′-5 | 11′- |
| D13 | DIAPHRAGM | 5 | 424 | 2′-1 | 883′- |
| D14 | DIAPHRAGM | 5 | 176 | 2′-4 | 410′- |

DGN File:N:\Projects\4433.04\Sheet.Files\Structures\F-16W\4433.f-16w-21.rebar.dgn
05-MAY-2005

| AL TH | SKETCH |
|---|---|
| -0 | HOOK DIAMETER ϕ = 0'-3 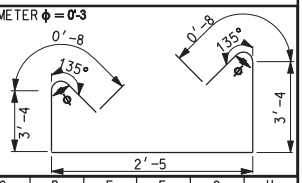  |

| | A | B | C | D | E | F | G | H |
|---|---|---|---|---|---|---|---|---|
| -4 | 2'-5 | 3'-1 | 2'-9 | 0'-8 | 135 | 0'-3 | 2 | 8 |
| -8 | 2'-5 | 3'-2 | 2'-5 | 0'-8 | 135 | 0'-3 | 4 | 8 |

HOOK DIA. ϕ = F

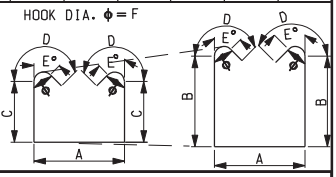


(S) PER SET
(S) REQ'D

-0

-0

| | A | B | C | D | E | F | G | H |
|---|---|---|---|---|---|---|---|---|
| -0 | 2'-5 | 2'-4 | 1'-11 | 0'-8 | 135 | 0'-3 | 7 | 8 |
| -0 | 2'-5 | 2'-6 | 2'-0 | 0'-8 | 135 | 0'-3 | 7 | 8 |

HOOK DIA. ϕ = F

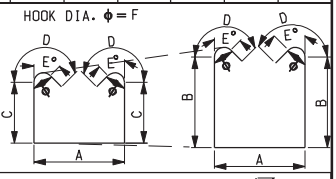


(S) PER SET
(S) REQ'D

-6

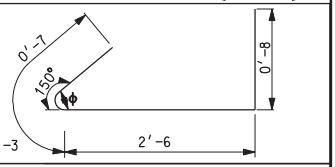


K DIAMETER ϕ = 0'-3

-6

HOOK DIAMETER ϕ = 0'-3

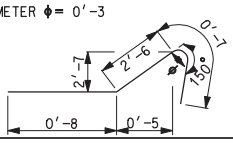


6

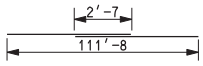


1 SPLICE(S) REQ'D

-0

-0

-0

-4

-0

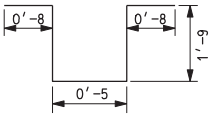


-0

-0

-0

-0

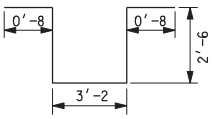


-0

-4

-0

-8

-8

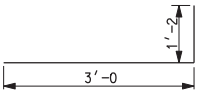


-0

-4

-4

-8

| MARK | LOCATION | SIZE NO. | NO. BARS | LENGTH | TOTAL LENGTH | SKETCH |
|---|---|---|---|---|---|---|
| D15 | DIAPHRAGM | 5 | 320 | 1'-10 | 586'-8 | |
| D16 | DIAPHRAGM | 5 | 40 | 3'-4 | 133'-4 | |
| D17 | DIAPHRAGM | 5 | 8 | 55'-0 | 440'-0 | |
| D18 | DIAPHRAGM | 5 | 12 | 52'-0 | 624'-0 | |
| D19 | DIAPHRAGM | 5 | 640 | 2'-7 | 1,653'-4 | |
| AS1 | APPROACH | 9 | 92 | 14'-9 | 1,357'-0 | |
| AS2 | APPROACH | 5 | 92 | 14'-9 | 1,357'-0 | |
| AS3 | APPROACH | 5 | 184 | 14'-6 | 2,668'-0 | |
| AS4 | APPROACH | 5 | 12 | 14'-7 | 175'-0 | |
| AS5 | APPROACH | 5 | 92 | 5'-3 | 483'-0 | 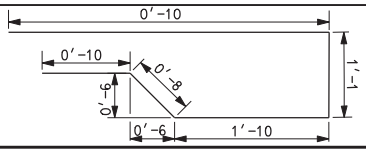  |
| P1 | PARAPET | 4 | 700 | 3'-4 | 2,333'-4 | |
| P2 | PARAPET | 4 | 40 | 14'-7 | 583'-4 | |
| P3 | PARAPET | 4 | 20 | 115'-10 | 2,316'-8 | 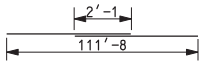  2 SPLICE(S) REQ'D |
| CB1 | CATCH BASIN | 5 | 12 | 10'-8 | 128'-0 | 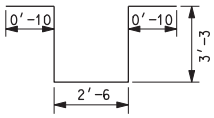  |
| CB2 | CATCH BASIN | 5 | 4 | 12'-11 | 51'-8 | 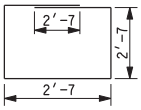  |
| CB3 | CATCH BASIN | 5 | 4 | 2'-6 | 10'-0 | |

SUMMARY OF COATED BARS

| | | | | | | |
|---|---|---|---|---|---|---|
| 9,530'-0 | OF NUMBER | 4 | BARS AT | 0.668 LBS/FT | = | 6,366.0 LBS |
| 36,784'-2 | OF NUMBER | 5 | BARS AT | 1.043 LBS/FT | = | 38,365.9 LBS |
| 1,076'-8 | OF NUMBER | 6 | BARS AT | 1.502 LBS/FT | = | 1,617.2 LBS |
| 4,247'-4 | OF NUMBER | 7 | BARS AT | 2.044 LBS/FT | = | 8,681.5 LBS |
| 259'-4 | OF NUMBER | 8 | BARS AT | 2.670 LBS/FT | = | 692.4 LBS |
| 6,247'-8 | OF NUMBER | 9 | BARS AT | 3.400 LBS/FT | = | 21,242.1 LBS |
| | | | | TOTAL | | 76,965.1 LBS |

NOTES:

ALL BARS ARE COATED

BAR SIZES ARE U.S. UNITS.

REINFORCING STEEL DIMENSIONS ARE OUT TO OUT OF BAR UNLESS OTHERWISE SPECIFIED.

SPLICES MAY BE OMITTED AT FABRICATORS OPTION...HOWEVER, IN SUCH CASE, FABRICATOR ASSUMES RESPONSIBILITY FOR FIT.

| NO. | DATE | BY | REMARKS |
|---|---|---|---|
| | | | |

REVISIONS

UTAH DEPARTMENT OF TRANSPORTATION
SALT LAKE CITY, UTAH
STRUCTURES DIVISION

DESIGN MDR 12/04 CHECK GG 12/04
DRAWN LM 12/04 CHECK MDR 12/04
QUANT. LM 02/05 CHECK MDR 02/05

APPROVAL RECOMM. DATE SENIOR DESIGN ENGR.
APPROVED FOR USE BY UDOT DATE UDOT BRIDGE ENGR.

I-15; CORRIDOR IN UTAH COUNTY
400 SOUTH OVERPASS IN OREM
REINFORCING STEEL SCHEDULE

PROJECT NUMBER SP-15-6(52)241

UTAH
COUNTY

F-16W
DRG. NO.

SHT. 21 OF 21

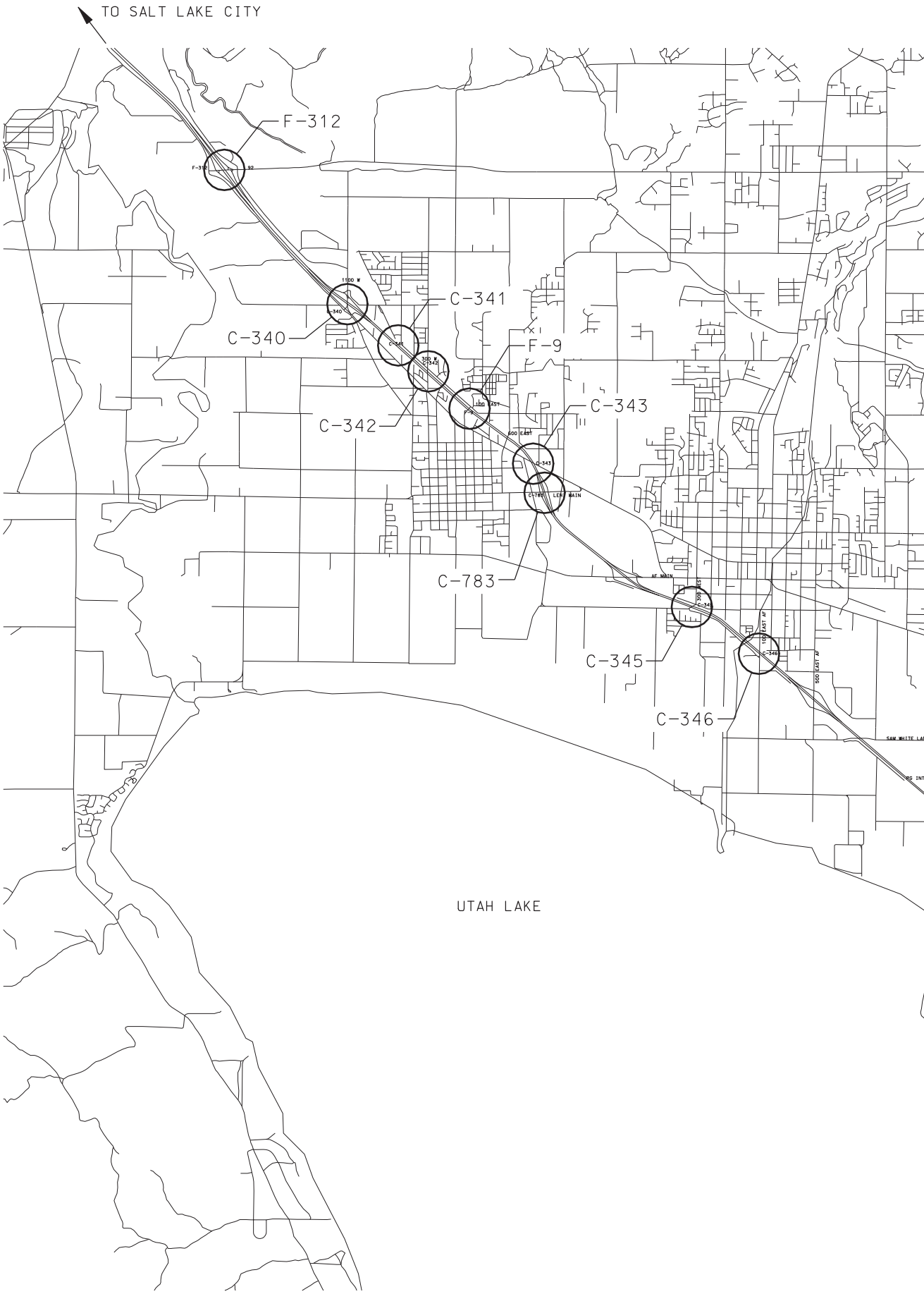


LOCATION PLAN

DGN File: IP_PWP:dms11717\44433_rehab_S01.dgn

02-MAY-2005

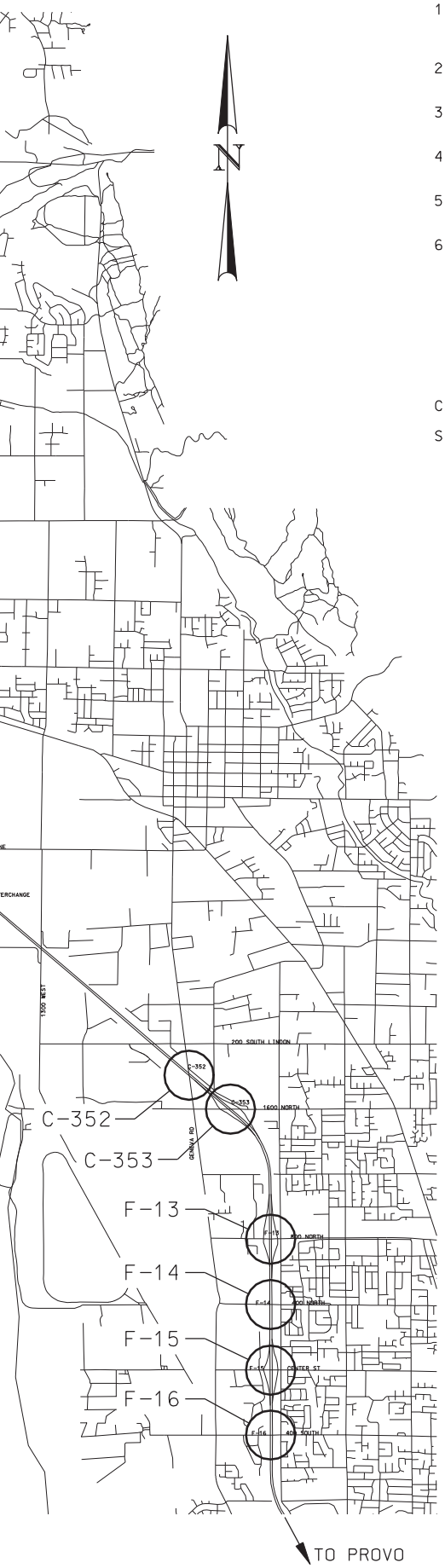


## GENERAL NOTES

1. ALL REINFORCING STEEL WILL BE COATED DEFORMED BILLET-STEEL BARS CONFORMING TO AASHTO M 284 OR M 111 AND M 31 GRADE 60 RESPECTIVELY.
2. ALL STRUCTURAL STEEL WILL CONFORM TO AASHTO M 270 GRADE 36, EXCEPT WHERE NOTED OTHERWISE.
3. CHAMFER ALL EXPOSED CONCRETE CORNERS 3/4" EXCEPT WHERE NOTED OTHERWISE.
4. PROVIDE 2" CONCRETE COVER TO REINFORCING STEEL EXCEPT WHERE NOTED OTHERWISE
5. ALL CAST-IN-PLACE CONCRETE WILL BE CLASS AA (AE) EXCEPT WHERE SPECIFIED OTHERWISE.
6. ALL DIMENSIONS SHOWN ARE IN FEET UNLESS SPECIFIED OTHERWISE. ALL ELEVATIONS ARE SHOWN IN FEET.

## DESIGN DATA

CAST-IN-PLACE CONCRETE: f'c = 4000 PSI; fy (REINF) = 60,000 PSI: n = 8

STRUCTURAL STEEL: Fy = 36,000 PSI

## INDEX OF SHEETS


1. LOCATION PLAN AND INDEX OF SHEETS
2. SUMMARY AND SCOPE I
3. SUMMARY AND SCOPE II
4. TYPICAL ABUTMENT REPAIR DETAILS
5. TYPICAL BENT REPAIR DETAILS
6. APPROACH SLAB CATCH BASIN (1 OF 2)
7. APPROACH SLAB CATCH BASIN (2 OF 2)
8. REPAIR OF CONCRETE SLOPE PROTECTION
9. PARAPET END MODIFICATION DETAILS
10. DECK OVERLAY DETAILS 1
11. DECK OVERLAY DETAILS 2


## FOR INFORMATION ONLY SHEETS

(REHAB ACTIVITY LOCATIONS ARE SHOWN ON FOR INFORMATION ONLY SHEETS.)

| | |
|---|---|
| F-312 | SHEET NO. 4, 8, 11 |
| C-340 | SHEET NO. 4, 5, 10, 11 |
| C-341 | SHEET NO. 4, 5, 10, 11 |
| C-342 | SHEET NO. 4, 5, 10, 11 |
| F-9 | SHEET NO. 4, 5, 10, 11 |
| C-343 | SHEET NO. 4, 5, 8, 10, 11 |
| C-783 | SHEET NO. 6, 7, 8, 11 |
| C-345 | SHEET NO. 4, 10, 11 |
| C-346 | SHEET NO. 4, 10, 11 |
| C-352 | SHEET NO. 4, 5, 8, 10, 11 |
| C-353 | SHEET NO. 4, 5, 10, 11 |
| F-13 | SHEET NO. 4, 8, 10, 11 |
| F-14 | SHEET NO. 4, 5, 8, 9, 10, 11 |
| F-15 | SHEET NO. 4, 5, 8, 10, 11 |
| F-16 | SHEET NO. 4, 5, 10, 11 |

| NO. | DATE | BY | REMARKS |
|---|---|---|---|
| | | | |

REVISIONS

UTAH DEPARTMENT OF TRANSPORTATION
SALT LAKE CITY, UTAH
HDR ENGINEERING, INC.

DESIGN RDH 11/04 CHECK GCG 11/04
DRAWN JG 11/04 CHECK RDH 11/04
QUANT. RDH 11/04 CHECK GCG 11/04

APPROVAL RECOMM. DATE SENIOR DESIGN ENGR.
APPROVED FOR USE BY UDOT DATE UDOT BRIDGE ENGR.

I-15; CORRIDOR IN UTAH COUNTY
BRIDGE REHABILITATION
LOCATION PLAN AND INDEX OF SHEETS

PROJECT NUMBER SP-15-6(52)241

UTAH
COUNTY

M-91
DRG. NO.

SHT. 1 OF 11

# SUMMARY OF BRIDGE RE

| BRIDGE NO. | LOCATION | MILE POSTS | O. TO O. DECK WIDTH (FEET) | SKEW | NO. OF EXISTING JOINTS IN BRIDGE | NO. OF JOINTS TO BE CLOSED | DECK | | |
|---|---|---|---|---|---|---|---|---|---|
| | | | | | | | ASPHALT SURFACING REMOVAL (STRUCTURES) *1 | WATERPROOFING MEMBRANE *1 | 2" HMA – 1/2 INCH *1 |
| | | | | | | | SQ YD | SQ FT | TON |
| F-312 (NB) | I-15 OVER SR-92, ALPINE INTERCHANGE | 284.010 | 62.33 FT | 124°45'47" | 0 | 0 | | | |
| F-312 (SB) | I-15 OVER SR-92, ALPINE INTERCHANGE | 284.031 | 62.33 FT | 124°45'47" | 0 | 0 | | | |
| C-340 (NB) | NORTH LEHI INTERCHANGE | 282.400 | 60.21 FT | 53°59'52" | 1 | 0 | 2573 | 3269 | 38.1 |
| C-340 (SB) | NORTH LEHI INTERCHANGE | 282.250 | 60.40 FT | 53°59'52" | 1 | 0 | 2577 | 3269 | 38.1 |
| C-341 (NB) | I-15 OVER RAILROAD AT LEHI | 271.760 | 60.35 FT | 23°00'04" | 3 | 0 | 4056 | 6685 | 78.0 |
| C-341 (SB) | I-15 OVER RAILROAD AT LEHI | 281.590 | 60.27 FT | 23°00'04" | 3 | 0 | 4052 | 6685 | 78.0 |
| C-342 (NB) | LEHI 300 WEST OVERPASS | 281.410 | 64.52 FT | 42°42'30" | 0 | 0 | 2398 | 2803 | 32.7 |
| C-342 (SB) | LEHI 300 WEST OVERPASS | 281.270 | 64.50 FT | 42°42'30" | 0 | 0 | 2398 | 2803 | 32.7 |
| F-9 (NB) | 100 EAST OVERPASS IN LEHI | 280.880 | 67.48 FT | 90°00'00" | 0 | 0 | 3130 | 2000 | 23.3 |
| F-9 (SB) | 100 EAST OVERPASS IN LEHI | 280.770 | 67.48 FT | 90°00'00" | 0 | 0 | 2744 | 2000 | 23.3 |
| C-343 (NB) | UPRR AND US-89 OVERPASS IN LEHI | 280.080 | 92.40 FT | 148°39'17" | 2 | 0 | 6147 | 7706 | 89.9 |
| C-343 (SB) | UPRR AND US-89 OVERPASS IN LEHI | 280.010 | 63.92 FT | 148°39'17" | 2 | 0 | 4288 | 7828 | 91.3 |
| C-783 (NB) | LEHI MAIN STREET INTERCHANGE | 279.780 | 63.17 FT | 106°52'29" | 0 | 0 | | | |
| C-783 (SB) | LEHI MAIN STREET INTERCHANGE | 279.700 | 63.17 FT | 106°52'29" | 0 | 0 | | | |
| C-345 (NB) | I-15 OVER 300 WEST IN AMERICAN FORK | 277.990 | 67.73 FT | 127°00'00" | 0 | 0 | 2200 | 2516 | 29.4 |
| C-345 (SB) | I-15 OVER 300 WEST IN AMERICAN FORK | 277.891 | 67.73 FT | 127°00'00" | 0 | 0 | 3125 | 2516 | 29.4 |
| C-346 (NB) | 100 EAST OVERPASS IN AMERICAN FORK | 277.231 | 64.32 FT | 50°20'22" | 0 | 0 | 2919 | 2763 | 32.2 |
| C-346 (SB) | 100 EAST OVERPASS IN AMERICAN FORK | 277.100 | 64.48 FT | 50°20'22" | 0 | 0 | 2922 | 2763 | 32.2 |
| C-352 (NB) | I-15 OVER UPRR AND SR-114 IN LINDON | 273.291 | 60.29 FT | 47°55'58" | 0 | 0 | 4804 | 5539 | 64.6 |
| C-352 (SB) | I-15 OVERUPRR AND SR-114 IN LINDON | 273.152 | 60.31 FT | 47°55'58" | 0 | 0 | 4806 | 5499 | 64.2 |
| C-353 (NB) | I-15 1600 NORTH OVERPASS IN OREM | 272.852 | 63.30 FT | 139°35'48" | 0 | 0 | 4318 | 3946 | 46.0 |
| C-353 (SB) | I-15 1600 NORTH OVERPASS IN OREM | 272.852 | 63.30 FT | 139°35'48" | 0 | 0 | 4233 | 3946 | 46.0 |
| F-13 (NB) | 800 NORTH OVERPASS IN OREM | 271.752 | 67.73 FT | 90°00'00" | 0 | 0 | 2370 | 2438 | 28.4 |
| F-13 (SB) | 800 NORTH OVERPASS IN OREM | 271.652 | 67.73 FT | 90°00'00" | 0 | 0 | 2370 | 2438 | 28.4 |
| F-14 (NB) | 400 NORTH OVERPASS IN OREM | 271.242 | 81.08 FT | 90°00'00" | 0 | 0 | 2266 | 2326 | 27.1 |
| F-14 (SB) | 400 NORTH OVERPASS IN OREM | 271.142 | 81.08 FT | 90°00'00" | 0 | 0 | 2266 | 2326 | 27.1 |
| F-15 (NB) | OREM CENTER STREET OVERPASS | 270.732 | 67.73 FT | 90°00'00" | 0 | 0 | 2325 | 2326 | 27.1 |
| F-15 (SB) | OREM CENTER STREET OVERPASS | 270.642 | 67.73 FT | 90°00'00" | 0 | 0 | 2325 | 2326 | 27.1 |
| F-16 (NB) | 400 SOUTH OVERPASS IN OREM | 270.232 | 67.48 FT | 90°00'00" | 0 | 0 | 2205 | 2000 | 23.3 |
| F-16 (SB) | 400 SOUTH OVERPASS IN OREM | 270.296 | 67.48 FT | 90°00'00" | 0 | 0 | 1434 | 2000 | 23.3 |
| | | | | | TOTAL | | 81251 | 92716 | 1082 |

*1. SEE M-91 SHEETS 10 & 11 FOR LIMITS OF WORK.

*2. AS REQ'D BY ENGINEER.

*3. INCLUDE NEW PARAPET AND RETAINED PORTIONS OF EXISTING PARAPET.

*4. SEE RELIEF JOINT CRACK SEALING DETAIL ON SHEET 11.

# EHABILITATION

| SURFACE | | | SUPERSTRUCTURE | | | | | | | | | |
|---|---|---|---|---|---|---|---|---|---|---|---|---|
| 1" OPEN GRADED SURFACE COURSE *1 | ASPHALT CEMENT PG 64-34 | EMULSIFIED ASPHALT SS-1 | RELIEF JOINT CRACK SEALING *4 | PARAPET SEALING *3 | BEAM END REPAIR | DIAPHRAGM REPAIR | APPROACH SLAB CATCH BASIN | PRESTRESSED BEAM REPAIR | PARAPET END MODIFICATION | PARAPET REPAIR | PARAPET SURFACE REPAIR | APPROACH SLAB VOID FILL |
| TON | TON | TON | FEET | FEET | EACH | EACH | EACH | EACH | EACH | EACH | FEET | LB |
| | | | 151.7 | 521.5 | | 1 | | | | | 100 | |
| | | | 151.7 | 521.5 | | | | | | | 150 | |
| 200.3 | | | | 448.9 | | | | | | | | 1104 |
| 200.7 | | | | 448.9 | | | | | | | 100 | 1104 |
| 348.1 | | | | 889.8 | | | | | | | | 2328 |
| 347.9 | | | | 889.8 | | | | | | | 100 | 2328 |
| 163.3 | | | | 376.4 | | | | | | | | 1336 |
| 163.2 | | | | 376.4 | | | | | | 1 | | 1336 |
| 330.1 | | | | 279.8 | | | | | | 1 | | 1060 |
| 245.5 | | | | 279.8 | 1 | | | | | | | 1060 |
| 447.2 | | | | 904.0 | | | | | | | | 1920 |
| 427.3 | | | | 977.0 | | | | | | | | 1920 |
| | | | 132.0 *2 | 505.5 | | | | | | | | |
| | | | 132.0 *2 | 505.5 | | | 1 | | | | | |
| 144.0 | | | | 342.4 | | | | | | | | 188 |
| 307.0 | | | | 354.6 | | | | | | | | 628 |
| 254.7 | | | | 364.4 | | | | | | | | 1264 |
| 255.2 | | | | 364.4 | | | | | | | | 1264 |
| 630.1 | | | | 654.9 | | | | | | | | 824 |
| 630.2 | | | | 654.8 | | | | | | | | 844 |
| 463.1 | | | | 505.3 | | | | | | | | 1384 |
| 442.6 | | | | 503.3 | | | | | | | | 1384 |
| 165.3 | | | | 347.7 | 1 | | | 1 | | | | 412 |
| 165.3 | | | | 347.7 | | | | | | | | 368 |
| 147.8 | | | | 331.7 | 1 | | | 2 | 2 | | | 56 |
| 147.8 | | | | 331.7 | | | | | 2 | | | 76 |
| 162.3 | | | | 331.7 | | | | | | | | 84 |
| 162.3 | | | | 331.7 | | | | | | | | 21 |
| 152.9 | | | | 281.8 | | | | 2 | | | | 1060 |
| 73.0 | | | | 281.8 | | 1 | | | | | | 1060 |
| 7177 | 496 | 42 | 568 | 14255 | 3 | 2 | 1 | 5 | 4 | 2 | 450 | 26413 |

CONTINUED ON NEXT PAGE.

| NO. | DATE | BY | REMARKS |
|---|---|---|---|
| | | | |

REVISIONS

UTAH DEPARTMENT OF TRANSPORTATION
SALT LAKE CITY, UTAH
HDR ENGINEERING, INC.

DESIGN RDH 11/04 CHECK GCG 11/04
DRAWN JG 11/04 CHECK RDH 11/04
QUANT. RDH 11/04 CHECK GCG 11/04

APPROVAL RECOMM. DATE SENIOR DESIGN ENGR.
APPROVED FOR USE BY UDOT DATE UDOT BRIDGE ENGR.

I-15; CORRIDOR IN UTAH COUNTY
BRIDGE REHABILITATION
SUMMARY AND SCOPE I

PROJECT NUMBER SP-15-6(52)241

UTAH
COUNTY

M-91
DRG. NO.

SHT. 2 OF 11

# SUMMARY OF BRIDGE

| BRIDGE NO. | LOCATION | MILE POSTS | O. TO O. DECK WIDTH (FEET) | SKEW | NO. OF EXISTING JOINTS IN BRIDGE | NO. OF JOINTS TO BE CLOSED | COLUMN REPAIR | |
|---|---|---|---|---|---|---|---|---|
| | | | | | | | EACH | E |
| F-312 (NB) | I-15 OVER SR-92, ALPINE INTERCHANGE | 284.010 | 62.33 FT | 124°45'47" | 0 | 0 | | |
| F-312 (SB) | I-15 OVER SR-92, ALPINE INTERCHANGE | 284.031 | 62.33 FT | 124°45'47" | 0 | 0 | | |
| C-340 (NB) | NORTH LEHI INTERCHANGE | 282.400 | 60.21 FT | 53°59'52" | 1 | 0 | 5 | |
| C-340 (SB) | NORTH LEHI INTERCHANGE | 282.250 | 60.40 FT | 53°59'52" | 1 | 0 | 6 | |
| C-341 (NB) | I-15 OVER RAILROAD AT LEHI | 271.760 | 60.35 FT | 23°00'04" | 3 | 0 | 6 | |
| C-341 (SB) | I-15 OVER RAILROAD AT LEHI | 281.590 | 60.27 FT | 23°00'04" | 3 | 0 | 6 | |
| C-342 (NB) | LEHI 300 WEST OVERPASS | 281.410 | 64.52 FT | 42°42'30" | 0 | 0 | 6 | |
| C-342 (SB) | LEHI 300 WEST OVERPASS | 281.270 | 64.50 FT | 42°42'30" | 0 | 0 | 1 | |
| F-9 (NB) | 100 EAST OVERPASS IN LEHI | 280.880 | 67.48 FT | 90°00'00" | 0 | 0 | 1 | |
| F-9 (SB) | 100 EAST OVERPASS IN LEHI | 280.770 | 67.48 FT | 90°00'00" | 0 | 0 | 2 | |
| C-343 (NB) | UPRR AND US-89 OVERPASS IN LEHI | 280.080 | 92.40 FT | 148°39'17" | 2 | 0 | 2 | |
| C-343 (SB) | UPRR AND US-89 OVERPASS IN LEHI | 280.010 | 63.99 FT | 148°39'17" | 2 | 0 | 7 | |
| C-783 (NB) | LEHI MAIN STREET INTERCHANGE | 279.780 | 63.17 FT | 106°52'29" | 0 | 0 | | |
| C-783 (SB) | LEHI MAIN STREET INTERCHANGE | 279.700 | 63.17 FT | 106°52'29" | 0 | 0 | | |
| C-345 (NB) | I-15 OVER 300 WEST IN AMERICAN FORK | 277.990 | 67.73 FT | 127°00'00" | 0 | 0 | | |
| C-345 (SB) | I-15 OVER 300 WEST IN AMERICAN FORK | 277.891 | 67.73 FT | 127°00'00" | 0 | 0 | | |
| C-346 (NB) | 100 EAST OVERPASS IN AMERICAN FORK | 277.231 | 64.32 FT | 50°20'22" | 0 | 0 | | |
| C-346 (SB) | 100 EAST OVERPASS IN AMERICAN FORK | 277.100 | 64.48 FT | 50°20'22" | 0 | 0 | 1 | |
| C-352 (NB) | I-15 OVER UPRR AND SR-114 IN LINDON | 273.291 | 60.29 FT | 47°55'58" | 0 | 0 | | |
| C-352 (SB) | I-15 OVERUPRR AND SR-114 IN LINDON | 273.152 | 60.31 FT | 47°55'58" | 0 | 0 | 1 | |
| C-353 (NB) | I-15 1600 NORTH OVERPASS IN OREM | 272.852 | 63.30 FT | 139°35'48" | 0 | 0 | | |
| C-353 (SB) | I-15 1600 NORTH OVERPASS IN OREM | 272.852 | 63.30 FT | 139°35'48" | 0 | 0 | | |
| F-13 (NB) | 800 NORTH OVERPASS IN OREM | 271.752 | 67.73 FT | 90°00'00" | 0 | 0 | | |
| F-13 (SB) | 800 NORTH OVERPASS IN OREM | 271.652 | 67.73 FT | 90°00'00" | 0 | 0 | | |
| F-14 (NB) | 400 NORTH OVERPASS IN OREM | 271.242 | 81.08 FT | 90°00'00" | 0 | 0 | 3 | |
| F-14 (SB) | 400 NORTH OVERPASS IN OREM | 271.142 | 81.08 FT | 90°00'00" | 0 | 0 | 4 | |
| F-15 (NB) | OREM CENTER STREET OVERPASS | 270.732 | 67.73 FT | 90°00'00" | 0 | 0 | 5 | |
| F-15 (SB) | OREM CENTER STREET OVERPASS | 270.642 | 67.73 FT | 90°00'00" | 0 | 0 | 5 | |
| F-16 (NB) | 400 SOUTH OVERPASS IN OREM | 270.232 | 67.48 FT | 90°00'00" | 0 | 0 | 5 | |
| F-16 (SB) | 400 SOUTH OVERPASS IN OREM | 270.296 | 67.48 FT | 90°00'00" | 0 | 0 | 4 | |
| | | | | | TOTAL | | 70 | |

*1. AS REQ'D BY ENGINEER.

*2. INCLUDES NEW AND EXISTING COLUMNS OR BENT WALLS.

DGN File: IP_PWP:dms11717\4433_rehab_S03.dgn
02-MAY-2005

# REHABILITATION

| SUBSTRUCTURE | | | | | | | | MISC | |
|---|---|---|---|---|---|---|---|---|---|
| COLUMN SEALING *2 | ABUTMENT REPAIR | ABUTMENT BACKWALL REPAIR | BENT WALL SEALING *2 | BENT CAP SEALING | BENT CAP REPAIR | PEDESTAL REPAIR | WINGWALL REPAIR | REPLACE CONCRETE SLOPE PROTECTION | SEALING EXISTING CONCRETE SLOPE PROTECTION JOINTS |
| EACH | EACH | EACH | EACH | EACH | EACH | EACH | EACH | SQ YD | FEET |
| 6 | 2 | | | | | | | 58 | |
| 6 | 2 | | | | | | | 20 | |
| 12 | 1 | 1 | 3 | | 1 | | | | |
| 12 | 1 | | 3 | | 1 | | | | |
| 18 | | 2 | | | 2 | 10 | | | |
| 18 | | 1 | | | 2 | 5 | 2 | | |
| 10 | 1 | 1 | | | | | 1 | | |
| 10 | 1 | 1 | | | 1 | | 1 | | |
| 8 | 1 | | | | | | | | |
| 8 | 1 | | | | | | | | |
| 32 | | | | 6 | | 8 | | | |
| 24 | | | | 4 | 4 | 14 | 1 | | 150 |
| | | | | | | | | 40 | |
| | | | | | | | | 174 | |
| 10 | | | | | | | 1 | | |
| 10 | | | | | | | 1 | | |
| 10 | 1 | 1 | | 2 | | | | | |
| 10 | 1 | 1 | | 2 | | | | | |
| 10 | | 1 | | | | | | | 100 |
| 10 | | 1 | | | 1 *1 | | 1 | | 100 |
| 10 | 1 | | | | | | | | |
| 10 | 1 | | | | 2 *1 | | | | |
| 8 | | | | | | | | | 100 |
| 8 | | | | | | | | | 100 |
| 10 | 1 | 1 | | | 2 | | | | 200 |
| 10 | 2 | 2 | | | | | | 57 | 200 |
| 8 | 2 | | | | 2 | | | | 300 |
| 8 | 2 | 1 | | | | | | | 300 |
| 8 | | | | | 2 *1 | | | | |
| 8 | | | | | 2 | | | | |
| 312 | 21 | 14 | 6 | 14 | 22 | 37 | 8 | 349 | 1550 |

| NO. | DATE | BY | REMARKS |
|---|---|---|---|
| | | | |

REVISIONS

UTAH DEPARTMENT OF TRANSPORTATION
SALT LAKE CITY, UTAH
HDR ENGINEERING, INC.

DESIGN RDH 11/04 CHECK GCG 11/04
DRAWN JG 11/04 CHECK RDH 11/04
QUANT. RDH 11/04 CHECK GCG 11/04

APPROVAL RECOMM. DATE SENIOR DESIGN ENGR.
APPROVED FOR USE BY UDOT DATE UDOT BRIDGE ENGR.

I-15; CORRIDOR IN UTAH COUNTY
BRIDGE REHABILITATION
SUMMARY AND SCOPE II

PROJECT NUMBER SP-15-6(52)241

UTAH
COUNTY

M-91
DRG. NO.

SHT. 3 OF 11

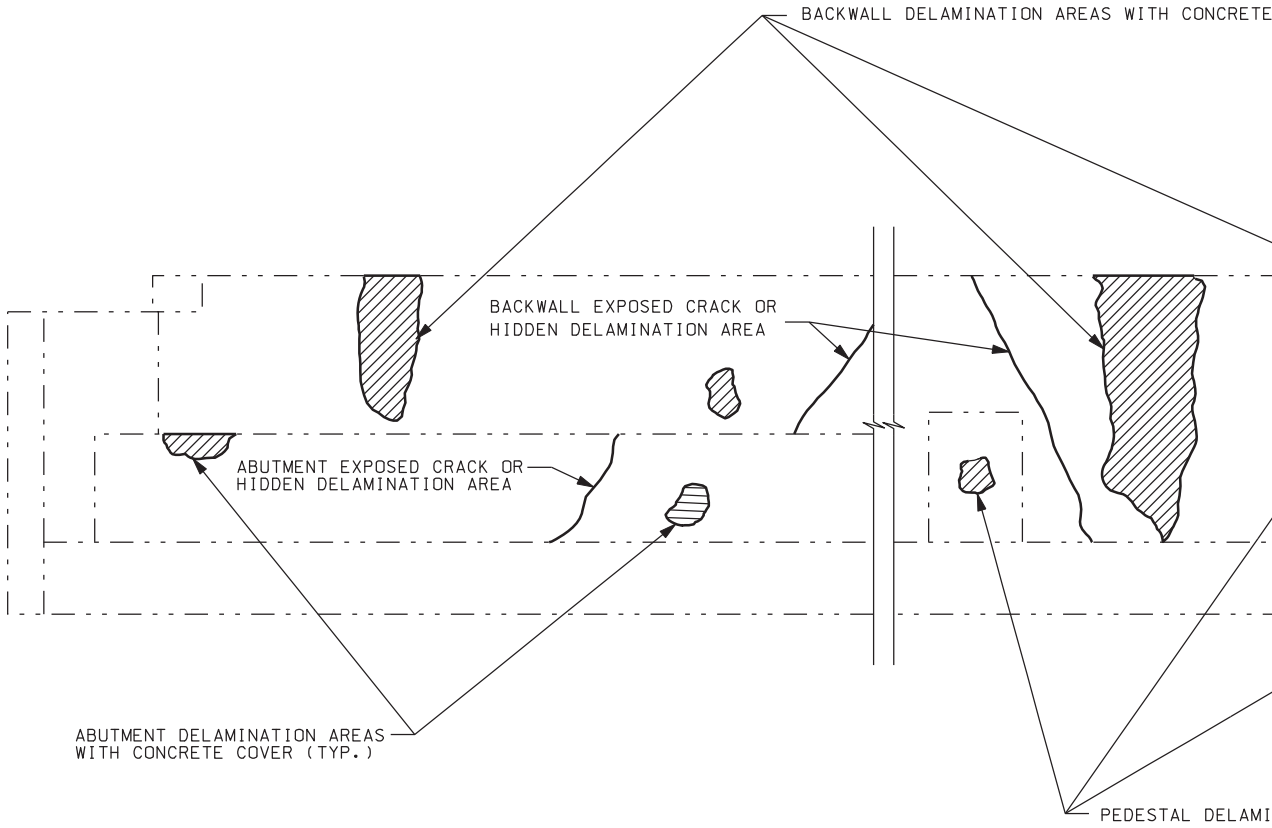


TYPICAL ABUTMENT ELEVAT

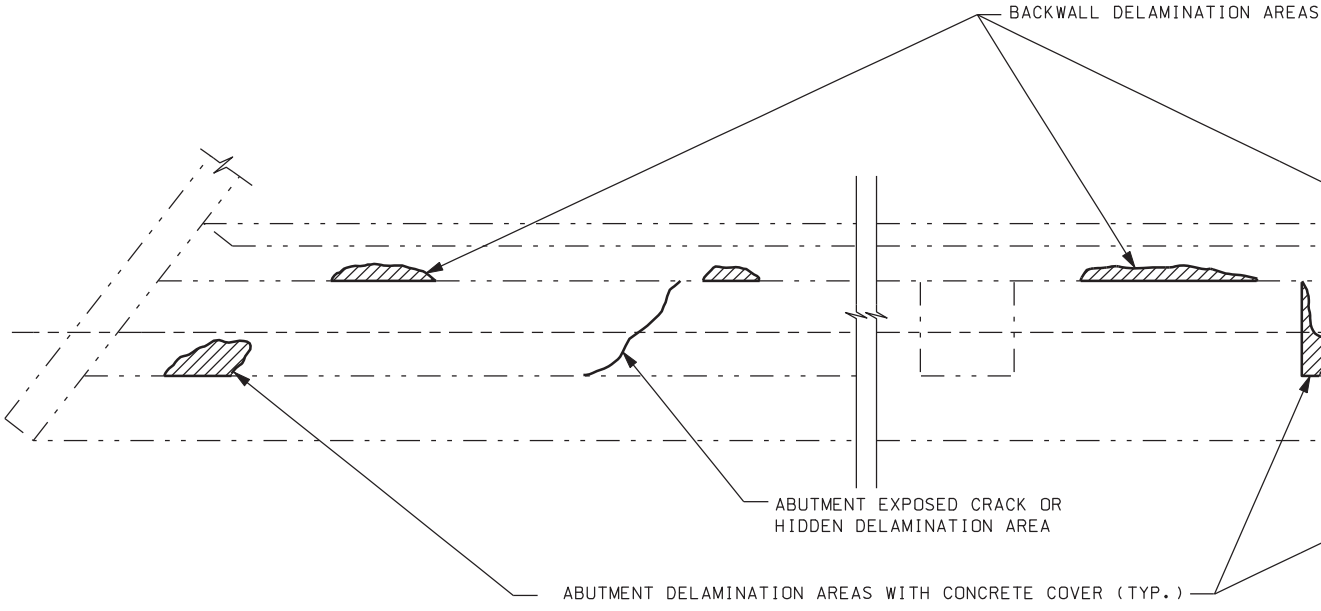


PLAN VIEW

DGN File: IP_PWP:dms11717\4433_rehab_S04.dgn
02-MAY-2005

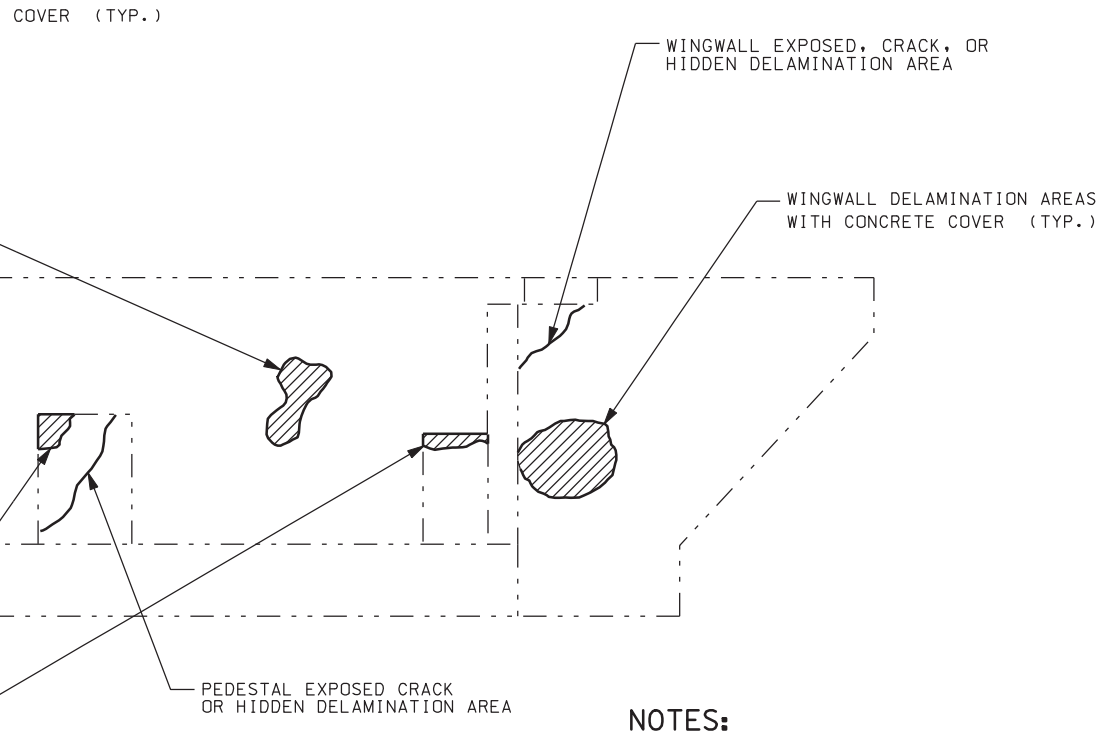


NATION AREAS WITH CONCRETE COVER (TYP.)

## ION VIEW

WITH CONCRETE COVER (TYP.)

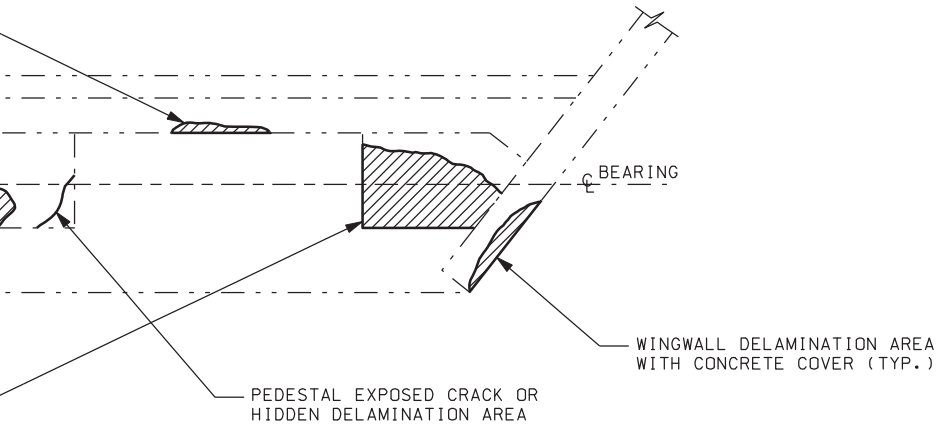


## NOTES:

1. SOUND EACH ITEM AND MARK THE APPROXIMATE LIMITS OF WORK FOR EACH MEMBER IN THE PRESENCE OF THE ENGINEER.
2. SEE SPECIFICATION SECTION 03924M "STRUCTURAL CONCRETE REPAIR" FOR THE REQUIRED CRACK AND DELAMINATION REPAIRS FOR ABUTMENT BACKWALL. EXPECT DELAMINATION REPAIR FOR EACH ABUTMENT BACKWALL OF UP TO 35% OF THE TOTAL EXPOSED BACKWALL SURFACE.
3. SEE SPECIFICATION SECTION 03924M "STRUCTURAL CONCRETE REPAIR" FOR THE REQUIRED CRACK AND DELAMINATION REPAIR FOR PEDESTAL. EXPECT DELAMINATION REPAIR FOR EACH PEDESTAL OF UP TO 70% OF THE TOTAL EXPOSED PEDESTAL SURFACE.
4. SEE SPECIFICATION SECTION 03924M "STRUCTURAL CONCRETE REPAIR" FOR THE REQUIRED CRACK AND DELAMINATION REPAIR FOR WINGWALL. EXPECT DELAMINATION REPAIR FOR EACH WINGWALL OF UP TO 20% OF THE TOTAL EXPOSED WINGWALL SURFACE.
5. SEE SPECIFICATION SECTION 03924M "STRUCTURAL CONCRETE REPAIR" FOR THE REQUIRED CRACK AND DELAMINATION REPAIR FOR ABUTMENT. EXPECT DELAMINATION REPAIR FOR EACH ABUTMENT OF UP TO 35% OF THE TOTAL EXPOSED ABUTMENT SURFACE.
6. DETAILS FOR "DIAPHGRAM REPAIR", "BEAM END REPAIR", "PRESTRESSED BEAM REPAIR" AND "PARAPET REPAIR" ARE SIMILAR TO THE DETAILS SHOWN ON THIS SHEET.

| NO. | DATE | BY | REMARKS |
|---|---|---|---|

REVISIONS

UTAH DEPARTMENT OF TRANSPORTATION
SALT LAKE CITY, UTAH
HDR ENGINEERING, INC.

DESIGN RDH 11/04 CHECK GCG 11/04
DRAWN JG 11/04 CHECK RDH 11/04
QUANT. RDH 11/04 CHECK GCG 11/04

APPROVAL RECOMM. DATE SENIOR DESIGN ENGR.
APPROVED FOR USE BY UDOT DATE UDOT BRIDGE ENGR.

I-15; CORRIDOR IN UTAH COUNTY
BRIDGE REHABILITATION
TYPICAL ABUTMENT REPAIR DETAILS
PROJECT NUMBER SP-15-6(52)241

UTAH
COUNTY

M-91
DRG. NO.

SHT. 4 OF 11

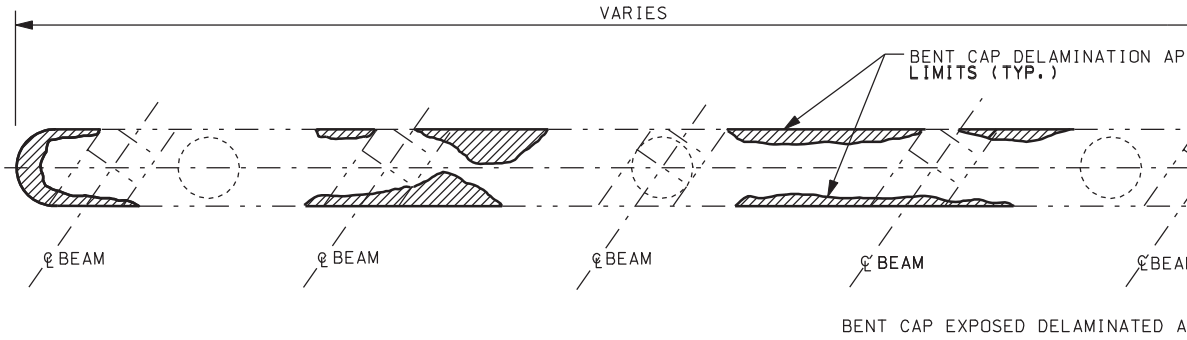


## TYPICAL BENT CAP PLAN VIEW

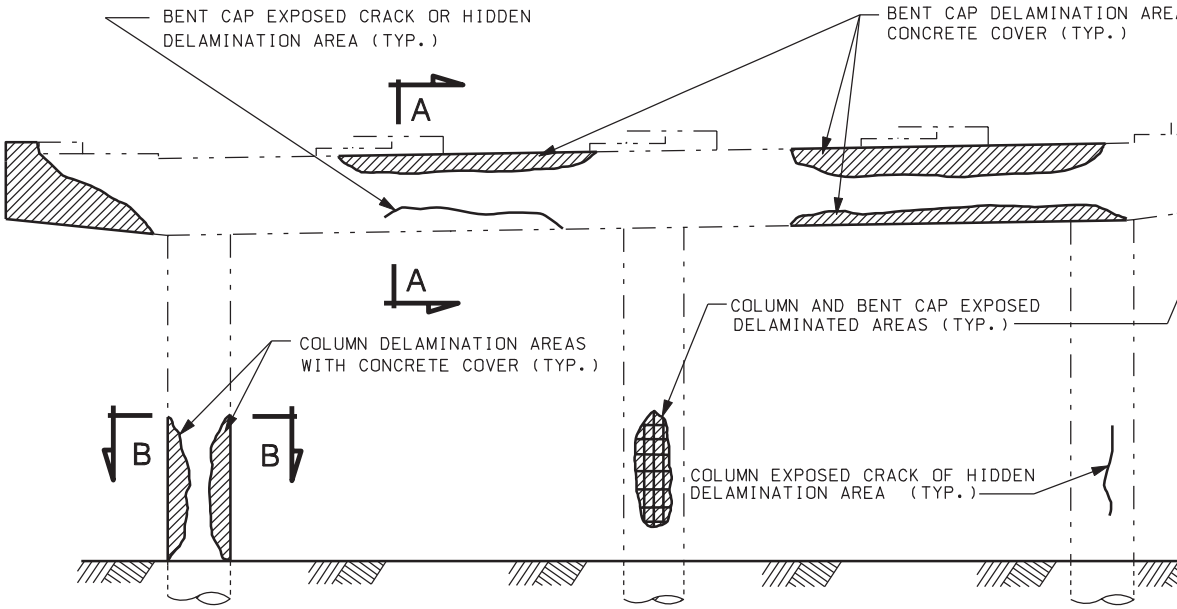


## TYPICAL BENT ELEVATION VIEW

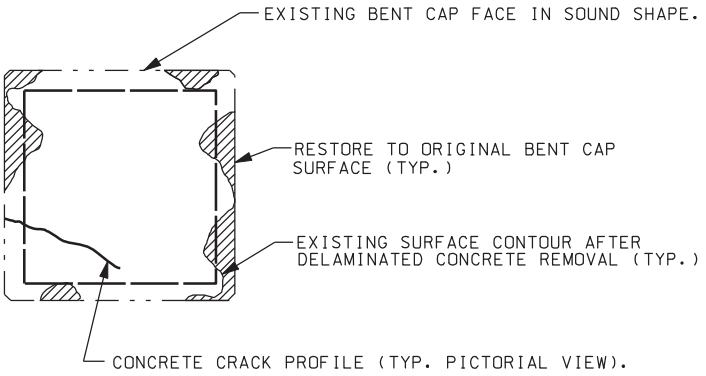


## SECTION A-A

TYPICAL BENT CAP REPAIR DETAIL

AS WITH

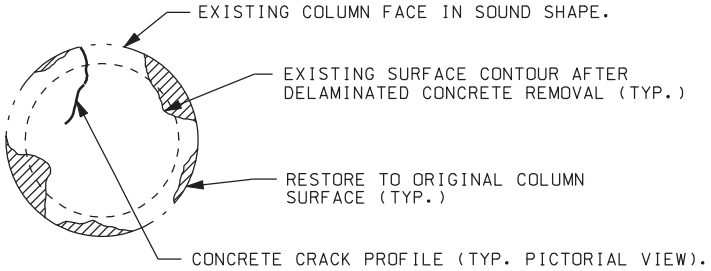


## SECTION B-B

TYPICAL COLUMN REPAIR DETAIL FOR ROUND OR RECTANGULAR COLUMNS

## NOTES:

1. THE CONTRACTOR WILL SOUND EACH ITEM IN THE PRESENCE OF THE RESIDENT ENGINEER AND MARK THE APPROXIMATE LIMITS OF WORK FOR EACH MEMBER.
2. SEE SPECIFICATION SECTION 03924M "STRUCTURAL CONCRETE REPAIR" FOR THE REQUIRED CRACK AND DELAMINATION REPAIRS. EXPECT DELAMINATION REPAIR FOR EACH COLUMN OF UP TO 25% OF THE TOTAL EXPOSED COLUMN SURFACE.
3. SEE SPECIFICATION SECTION 03924M "STRUCTURAL CONCRETE REPAIR " FOR THE REQUIRED CRACK AND DELAMINATION REPAIRS. EXPECT DELAMINATION REPAIR FOR EACH BENT CAP OF UP TO 50% OF THE TOTAL EXPOSED BENT CAP SURFACE.

| NO. | DATE | BY | REMARKS |
|---|---|---|---|
| | | | |

REVISIONS

UTAH DEPARTMENT OF TRANSPORTATION
SALT LAKE CITY, UTAH
HDR ENGINEERING, INC.

DESIGN RDH 11/04 CHECK GCG 11/04
DRAWN JG 11/04 CHECK RDH 11/04
QUANT. RDH 11/04 CHECK GCG 11/04

APPROVAL RECOMM. DATE SENIOR DESIGN ENGR.
APPROVED FOR USE BY UDOT DATE UDOT BRIDGE ENGR.

I-15; CORRIDOR IN UTAH COUNTY
BRIDGE REHABILITATION
TYPICAL BENT REPAIR DETAILS
PROJECT NUMBER SP-15-6(52)241

UTAH
COUNTY

M-91
DRG. NO.

SHT. 5 OF 11

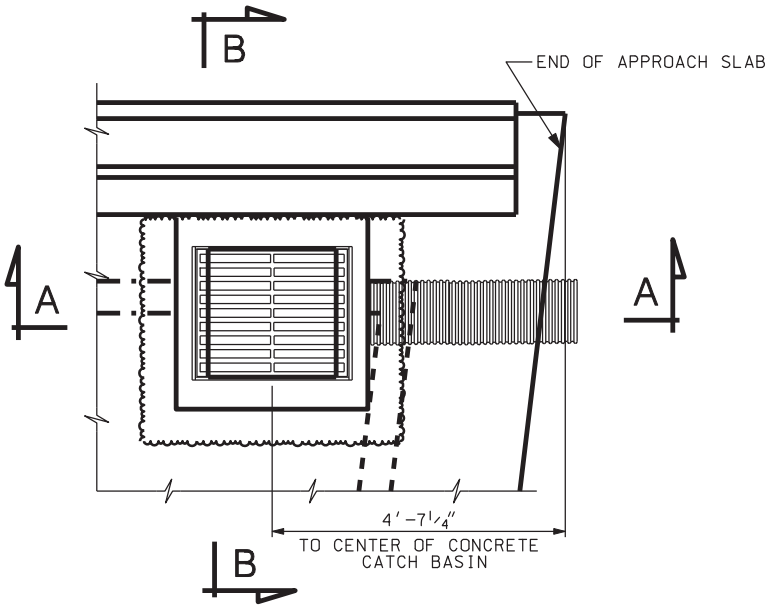


TYPICAL PLAN

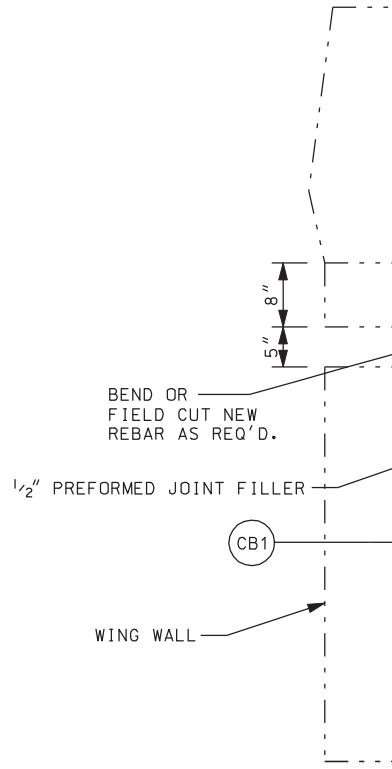


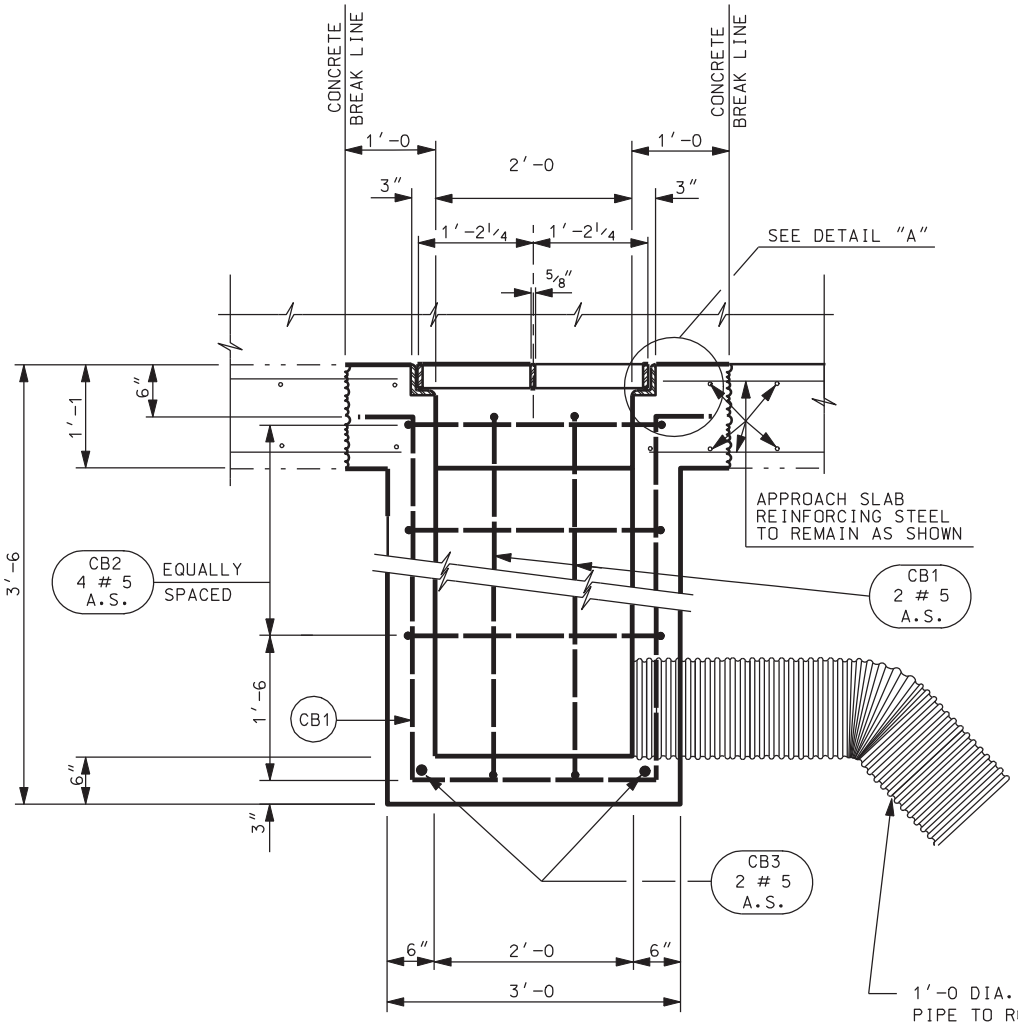


SECTION A-A

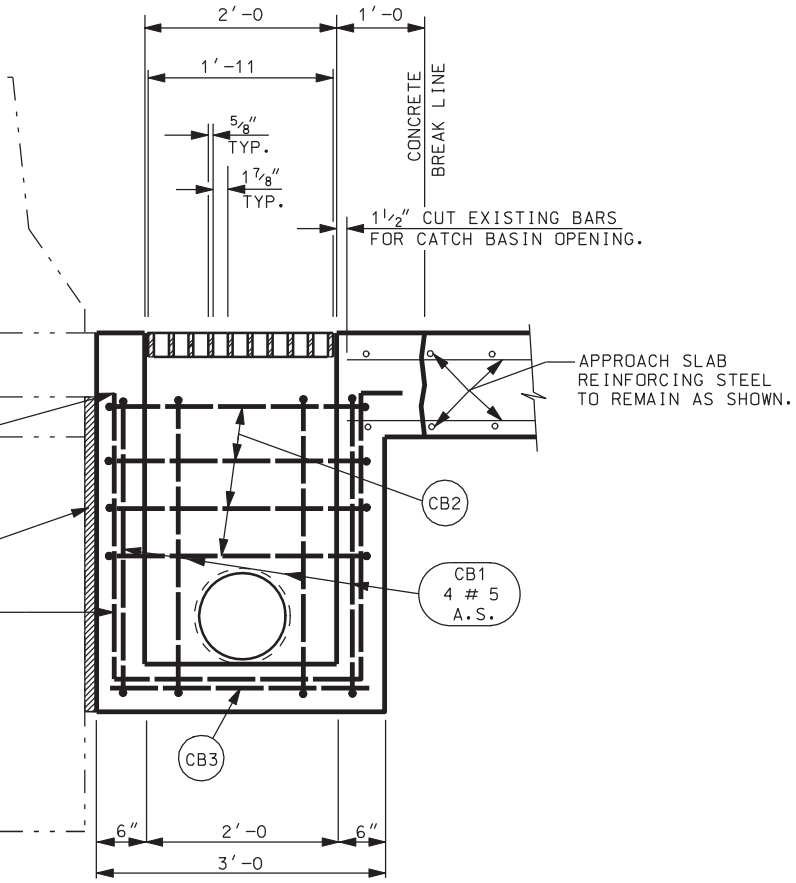


SECTION B-B

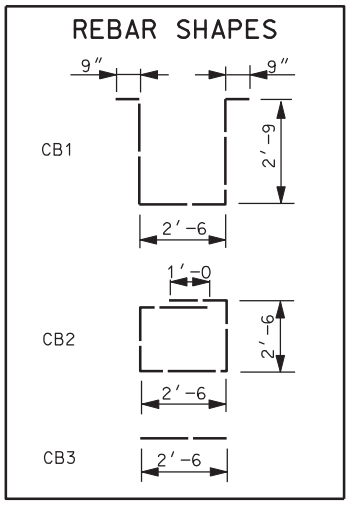


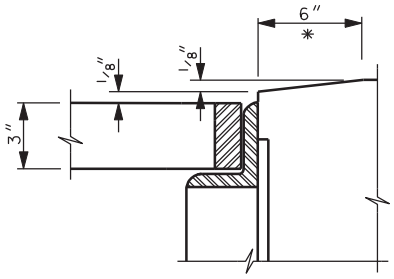


DETAIL "A"

* SEE NOTE 8

## NOTES

1. USE COATED DEFORMED BILLET STEEL BARS CONFORMING TO AASHTO M 284 OR M 111 AND M 31 GRADE 60.
2. USE STRUCTURAL STEEL CONFORMING TO AASHTO M 270 GRADE 36 EXCEPT WHERE NOTED OTHERWISE.
3. HOT-DIP GALVANIZE THE GRATING AND FRAME AFTER FABRICATION IN ACCORDANCE WITH AASTHO M 111.
4. ALL JOINTS OF GRATING AND FRAME REQUIRE 1/4" FILLET WELDS UNLESS NOTED OTHERWISE.
5. CONTRACTOR TO VERIFY AS BUILT DIMENSIONS OF CONCRETE CATCH BASIN PRIOR TO GRATE FABRICATION.
6. SEE SHEET 7 FOR FRAME AND GRATE DETAILS.
7. THE USE OF PRE-CAST CONCRETE CATCH BASINS SHALL NOT BE ALLOWED.
8. HAND TROWEL CONCRETE AROUND FRAME TO SLOPE TOWARD GRATE.

| NO. | DATE | BY | REMARKS |
|---|---|---|---|
| | | | |

REVISIONS

UTAH DEPARTMENT OF TRANSPORTATION
SALT LAKE CITY, UTAH
HDR ENGINEERING, INC.

DESIGN RDH 11/04 CHECK GCG 11/04
DRAWN JG 11/04 CHECK RDH 11/04
QUANT. RDH 11/04 CHECK GCG 11/04

APPROVAL RECOMM. DATE SENIOR DESIGN ENGR.
APPROVED FOR USE BY UDOT DATE UDOT BRIDGE ENGR.

I-15; CORRIDOR IN UTAH COUNTY
BRIDGE REHABILITATION
APPROACH SLAB CATCH BASIN
PROJECT NUMBER SP-15-6(52)241

UTAH
COUNTY

M-91
DRG. NO.

SHT. 6 OF 11

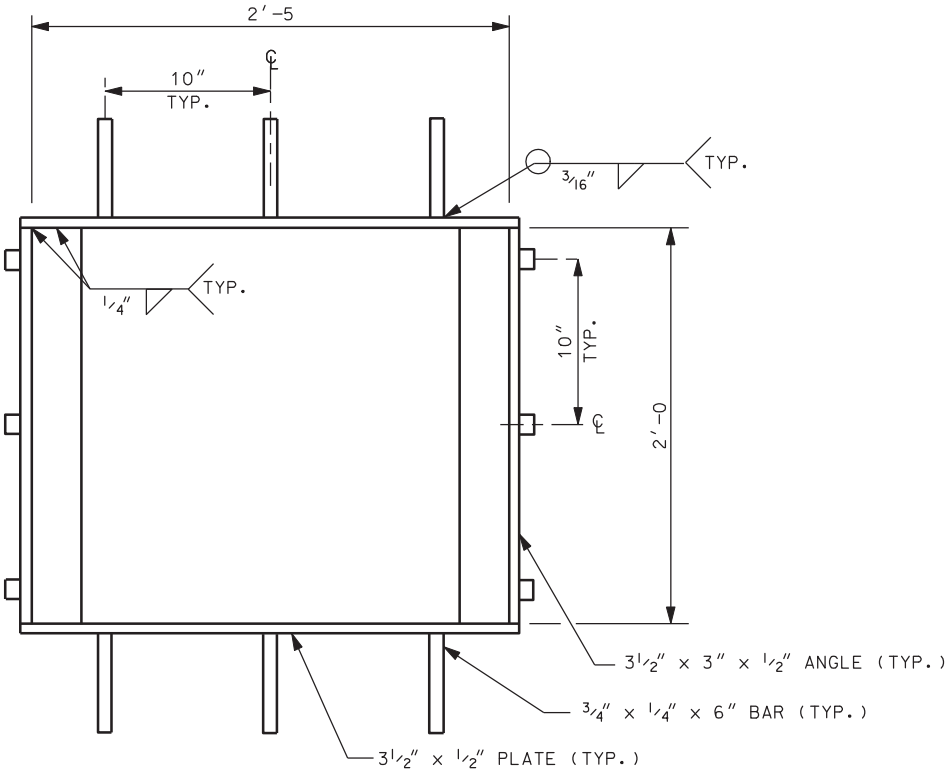


FRAME PLAN VIEW

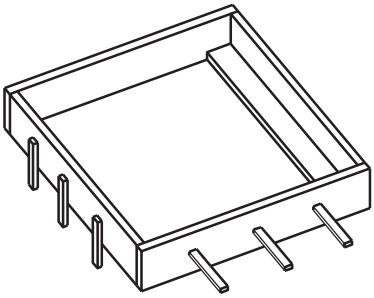

TYPICAL FRAME

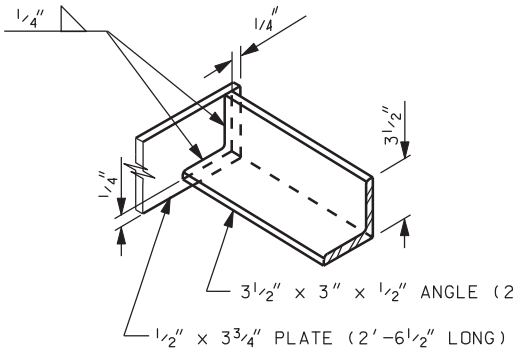


FRAME CORNER DETAIL

02-MAY-2005 DGN File: IP_PWP:dms11717\4433_rehab_S07.dgn

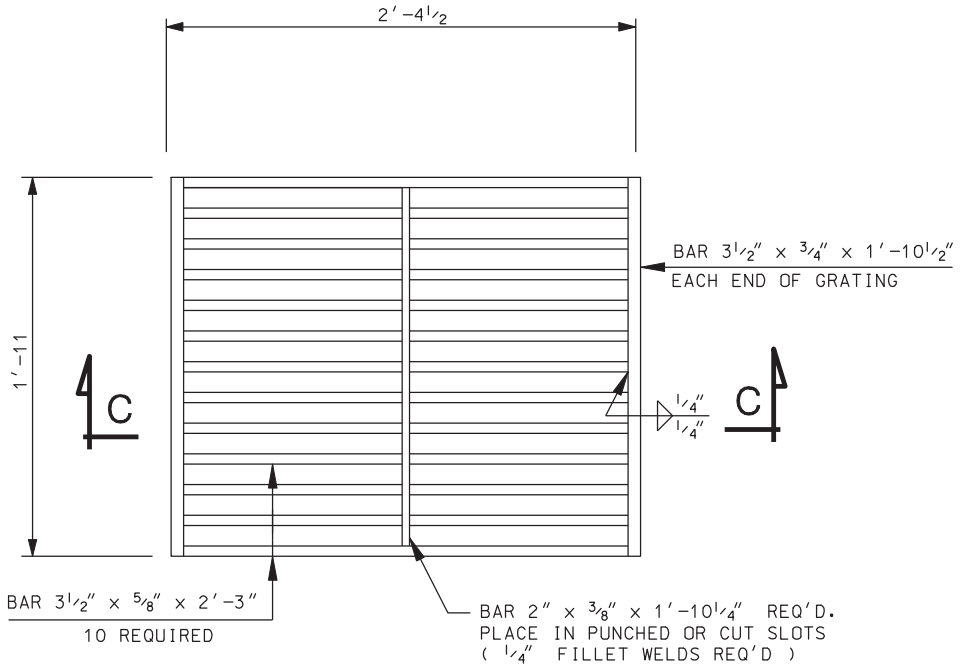


TYPICAL FRAME

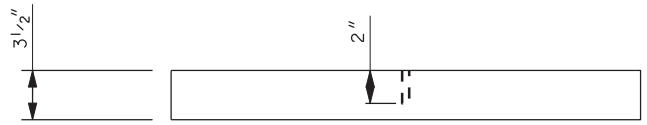


SECTION C-C

'-0 LONG)

| NO. | DATE | BY | REMARKS |
|---|---|---|---|
| | | | |

REVISIONS

UTAH DEPARTMENT OF TRANSPORTATION
SALT LAKE CITY, UTAH
HDR ENGINEERING, INC.

DESIGN RDH 11/04 CHECK GCG 11/04
DRAWN JG 11/04 CHECK RDH 11/04
QUANT. RDH 11/04 CHECK GCG 11/04

APPROVAL RECOMM. DATE SENIOR DESIGN ENGR.
APPROVED FOR USE BY UDOT DATE UDOT BRIDGE ENGR.

I-15; CORRIDOR IN UTAH COUNTY
BRIDGE REHABILITATION
APPROACH SLAB CATCH BASIN
PROJECT NUMBER SP-15-6(52)241

UTAH
COUNTY

M-91
DRG. NO.

SHT. 7 OF 11

NOTES:

1. QUANTITIES GIVEN FOR CONCRETE SLOPE PROTECTION ARE ESTIMATED ONLY AND ARE BASED ON THE EXPOSED FINISHED CONCRETE SURFACE AREA AT THE TIME WHEN CONCRETE SLOPE PROTECTION AND THE CUT-OFF WALL ARE CONSTRUCTED.
2. ELEVATIONS AT TOE OF SLOPE ARE APPROXIMATE ONLY AND SHALL BE VERIFIED AT THE TIME OF CONSTRUCTION BY THE PROJECT ENGINEER.
3. LOCATION OF THE TOE OF SLOPE IS APPROXIMATE ONLY AND SHALL BE MODIFIED TO MEET FIELD CONDITIONS AS DIRECTED BY THE PROJECT ENGINEER.
4. CUT-OFF WALL IS CONTINUOUS AROUND PERIMETER OF SLOPE PROTECTION EXCEPT AT THE ABUTMENT FOOTING.
5. CLEAN UP THE DESIGNATED JOINTS FULL DEPTH FROM ALL EXISTING JOINT MATERIAL.
6. MATCH DIAMETER OF BACKER ROD WITH THE WIDTH OF EXISTING JOINT PLUS 1/8" -1/4".
7. SINGLE COMPONENT POLYURETHANE SEALANT, GRAY IN COLOR.
8. MATCH FINISH OF EXISTING CONCRETE SLOPE PROTECTION.
9. SLOPE PROTECTION JOINTS TO BE SEALED WILL BE DETERMINED IN THE PRESENCE OF THE ENGINEER.
10. SLOPE PROTECTION PANELS TO BE REMOVED AND REPLACED WILL BE DETERMINED IN THE PRESENCE OF THE ENGINEER.

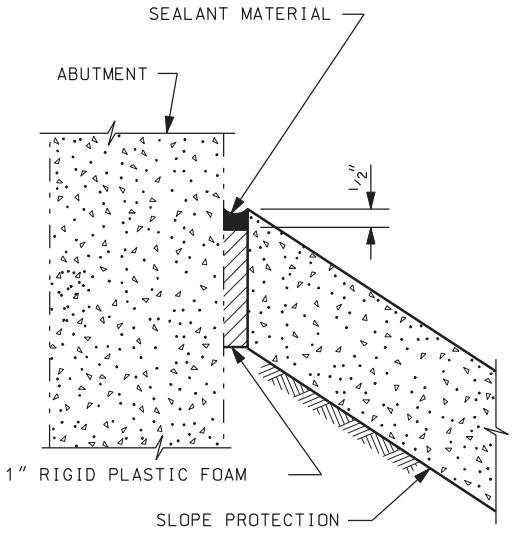


DETAIL "B"

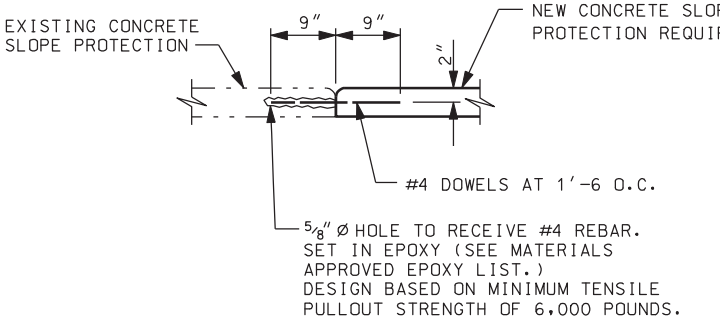


CONCRETE SLOPE PROTECTION REPAIR

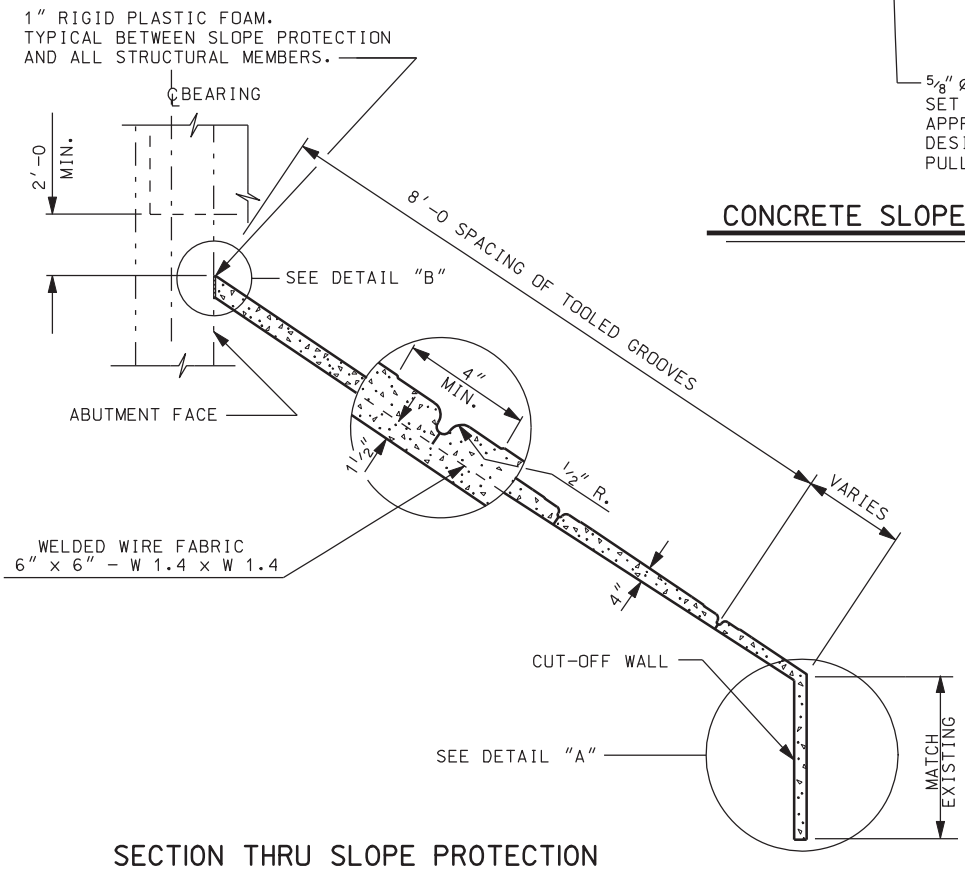


SECTION THRU SLOPE PROTECTION

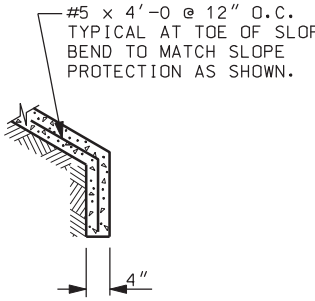


DETAIL "A"

DGN File: IP_PWP:dms11717\44433_rehab_S08.dgn
02-MAY-2005

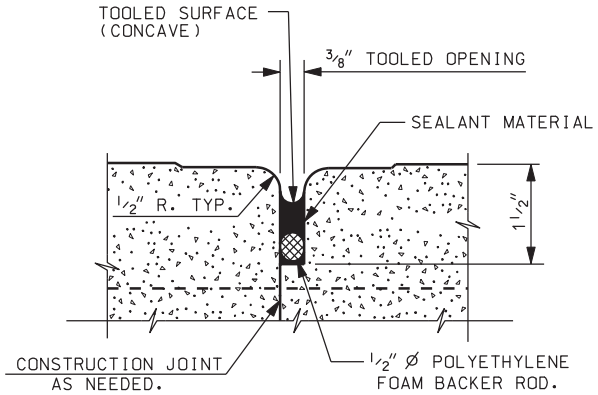


VERTICAL JOINT DETAIL

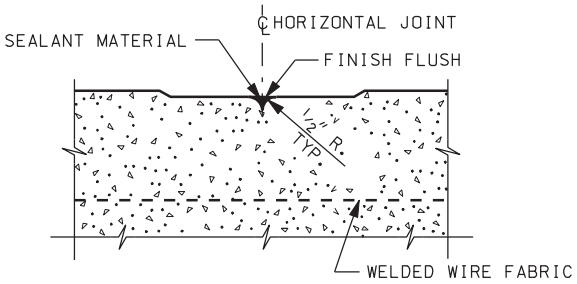


HORIZONTAL JOINT DETAIL

TYPICAL DETAILS FOR NEW SLOPE PROTECTION JOINTS

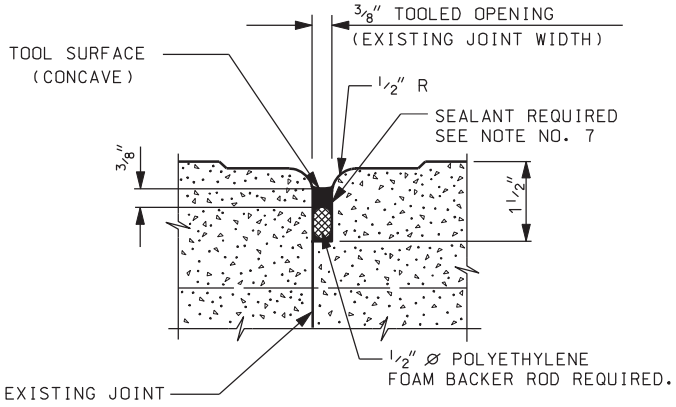


CASE I

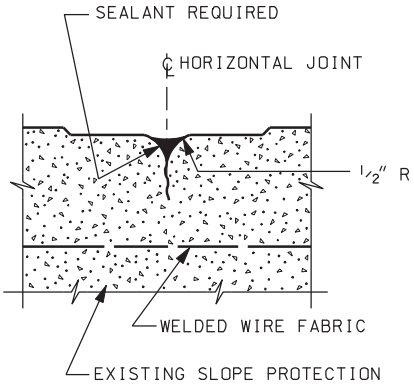


TYPICAL CONTRACTION

JOINT SEALING DETAIL

CONTRACTION JOINTS MAY
BE HORIZONTAL OR VERTICAL

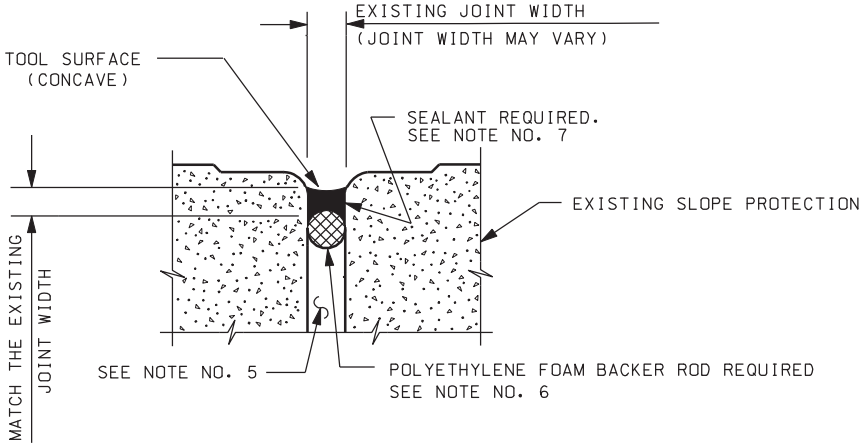


CASE II

TYPICAL VERTICAL JOINT SEALING DETAILS

| NO. | DATE | BY | REMARKS |
|---|---|---|---|
| | | | |

REVISIONS

UTAH DEPARTMENT OF TRANSPORTATION
SALT LAKE CITY, UTAH
HDR ENGINEERING, INC.

DESIGN RDH 11/04 CHECK GCG 11/04
DRAWN JG 11/04 CHECK RDH 11/04
QUANT. RDH 11/04 CHECK GCG 11/04

APPROVAL RECOMM. DATE SENIOR DESIGN ENGR.
APPROVED FOR USE BY UDOT DATE UDOT BRIDGE ENGR.

I-15; CORRIDOR IN UTAH COUNTY
BRIDGE REHABILITATION
REPAIR OF CONCRETE SLOPE PROTECTION
PROJECT NUMBER SP-15-6(52)241

UTAH
COUNTY

M-91
DRG. NO.

SHT. 8 OF 11

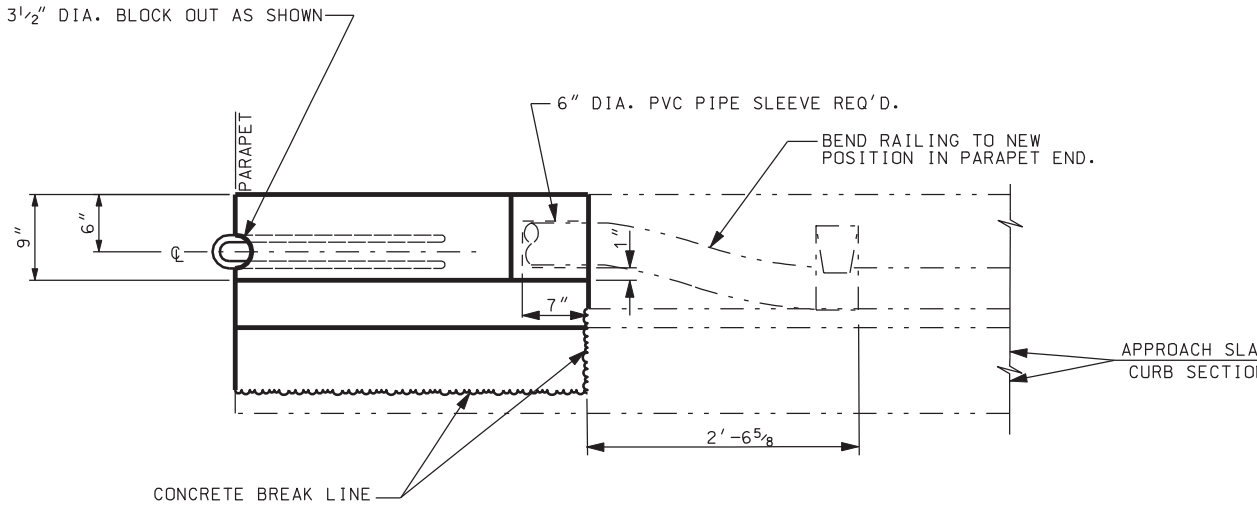


PLAN

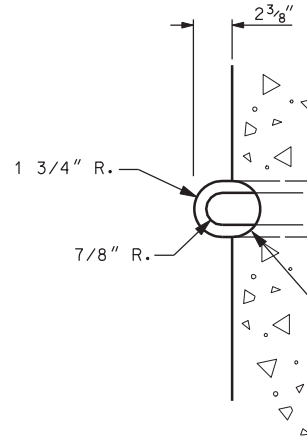


CONNE

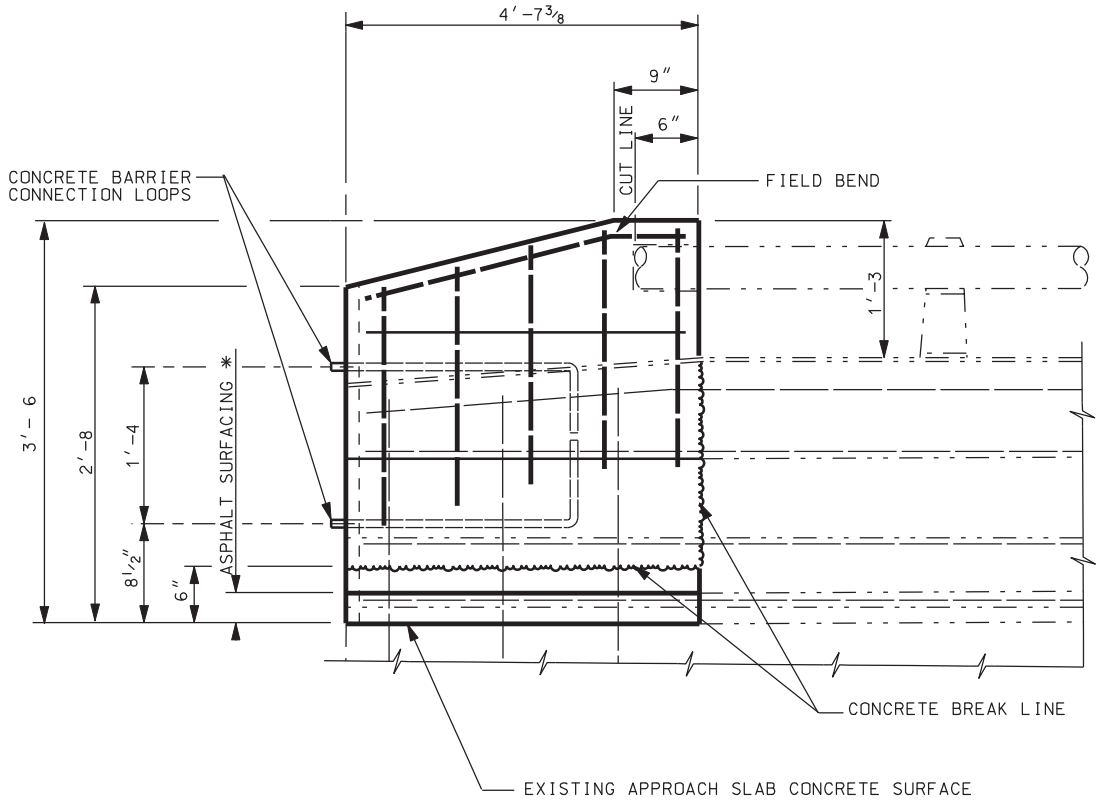


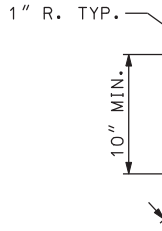


* ACTUAL THICKNESS OF ASPHALT SURFACING MAY VARY.

ELEVATION

DGN File: IP_PWP:dms1717\4433_rehab_S09.dgn
02-MAY-2005

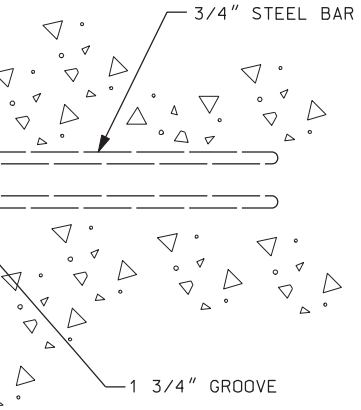


CTION LOOP END DETAIL

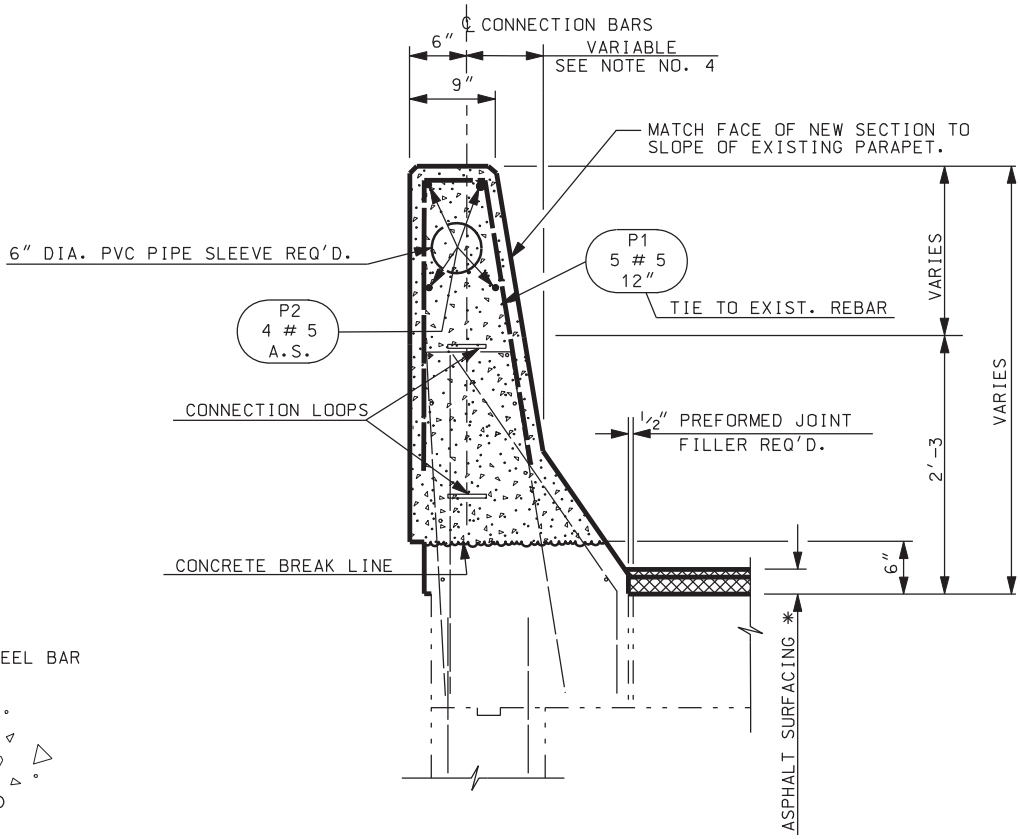


TYPICAL SECTION

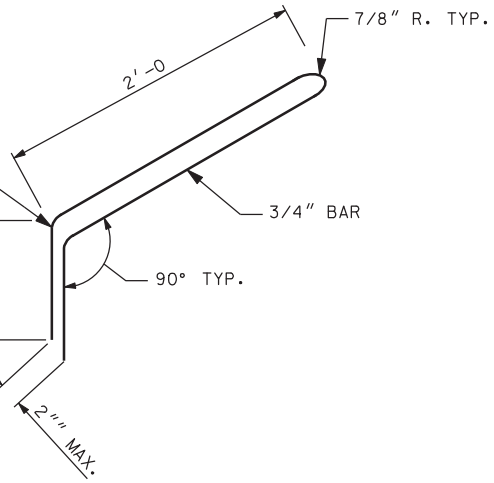


CONNECTION LOOP DETAIL

NOTES:

1.- RETAIN ALL EXISTING HORIZONTAL AND VERTICAL BARS IN PARAPET.

2.- FURNISH CONNECTION LOOPS AND GUARDRAIL PRESET ANCHORS AT ALL CORNERS OF STRUCTURE WHERE EXISTING PARAPET IS RETAINED.

3.- RECAST THE ENDS OF EACH PARAPET AFTER INSTALLATION OF CONNECTION LOOPS, GUARDRAIL PRESET ANCHORS, AND THE ADDITIONAL REBARS.

4.- CHOOSE THIS DIMENSION SO THAT THE PARAPET CURB WILL LINE UP FLUSH WITH THE PRECAST CONCRETE BARRIER CURB AT EVERY CORNER.

| NO. | DATE | BY | REMARKS |
|---|---|---|---|

REVISIONS

UTAH DEPARTMENT OF TRANSPORTATION
SALT LAKE CITY, UTAH
HDR ENGINEERING, INC.

DESIGN RDH 11/04 CHECK GCG 11/04
DRAWN JG 11/04 CHECK RDH 11/04
QUANT. RDH 11/04 CHECK GCG 11/04

APPROVAL RECOMM. DATE SENIOR DESIGN ENGR.
APPROVED FOR USE BY UDOT DATE UDOT BRIDGE ENGR.

I-15; CORRIDOR IN UTAH COUNTY
BRIDGE REHABILITATION
PARAPET END MODIFICATION DETAILS
PROJECT NUMBER SP-15-6(52)241

UTAH
COUNTY

M-91
DRG. NO.

SHT. 9 OF 11

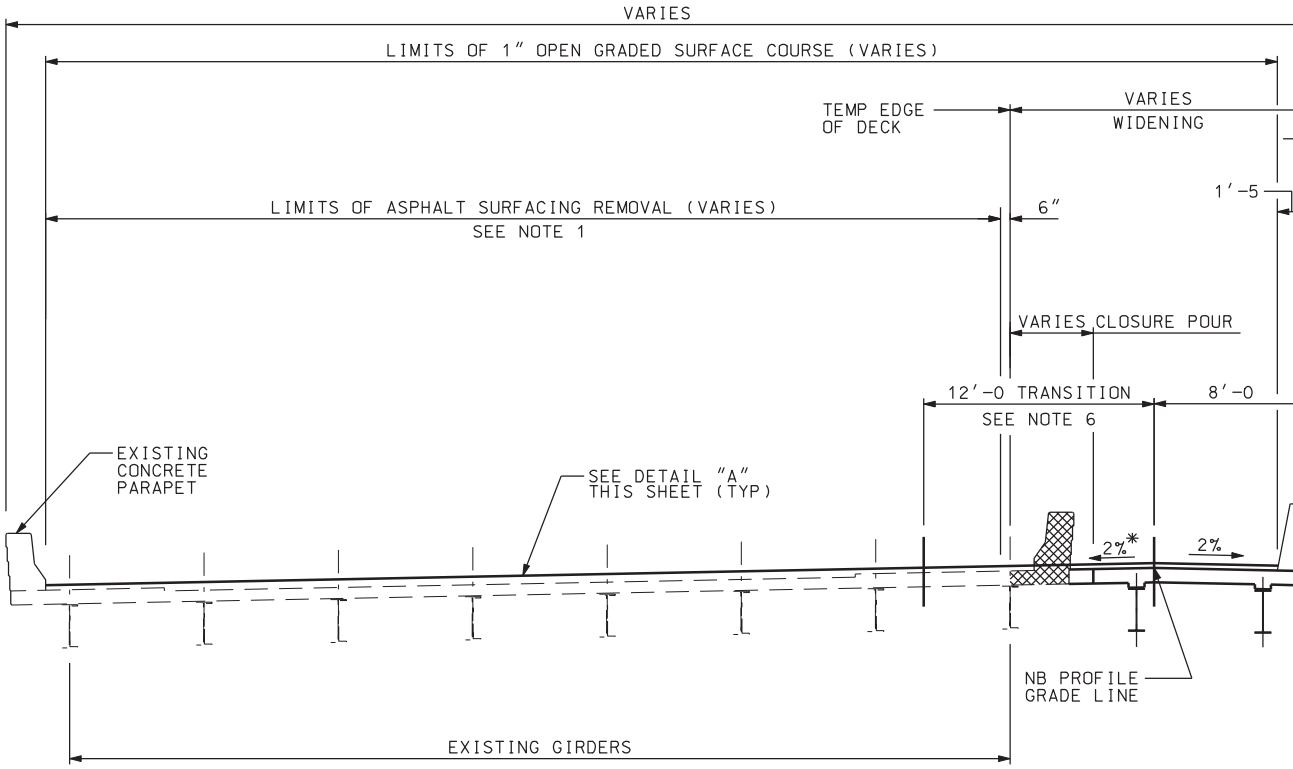


## TYPICAL

LOOKING

* ACTUAL CROSS

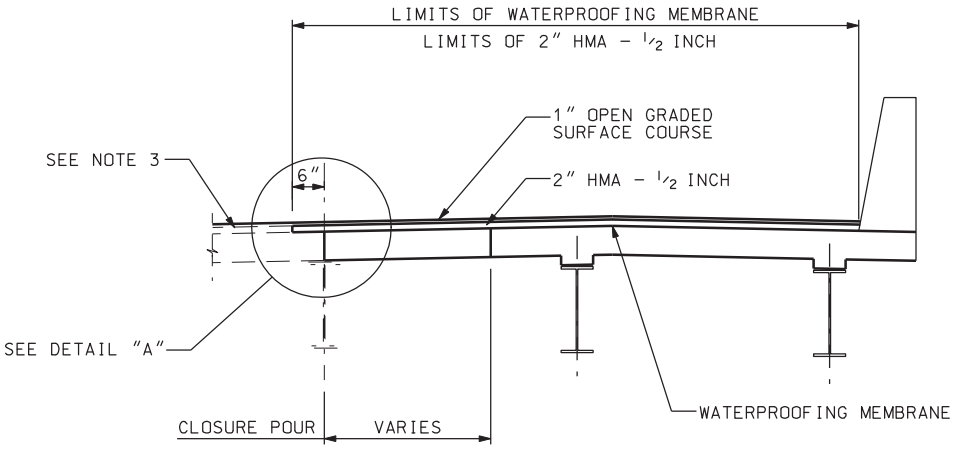


## WIDENING

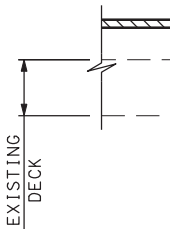


## NOTES

1. PARTIALLY REMOVE EXISTING ASPHALT SURFACING OVERLAY AS SHOWN IN TABLE 1 ON M-91 SHEET 11. MAKE 1" SAW CUT IN ASPHALT SURFACING AS SHOWN IN "EXISTING DECK OVERHANG" DETAIL ON M-91 SHEET 11.
2. APPLY WATERPROOFING MEMBRANE, PLACE 1" OPEN GRADED SURFACE COURSE ON TOP OF 2" HMA - 1/2 INCH. TOTAL THICKNESS = 3". SEE DECK OVERLAY DETAIL.
3. PLACE 1" OPEN GRADED SURFACE COURSE OVER MILLED SURFACES.
4. DO NOT DAMAGE CONCRETE DECK DURING MILLING OPERATIONS.
5. DO NOT DAMAGE CONCRETE HAUNCHES AND/OR EXPANSION JOINTS DURING SAW CUTTING OR MILLING OPERATIONS.
6. AFTER MILLING OPERATIONS CONTRACTOR WILL MAINTAIN A MINIMUM 1% CROSS SLOPE (2% PREFERRED) CAN BE ACHIEVED OVER THE 12'-0 TRANSITION AFTER THE PLACEMENT OF THE 1" OPEN GRADED SURFACE COURSE. IF A MINIMUM 1% CROSS SLOPE CAN NOT BE MAINTAINED, ADDITIONAL MILLING WILL BE REQUIRED AS DETERMINED BY THE ENGINEER.

DGN File: IP_PWP:dms17717\4433_rehab_S10.dgn
02-MAY-2005

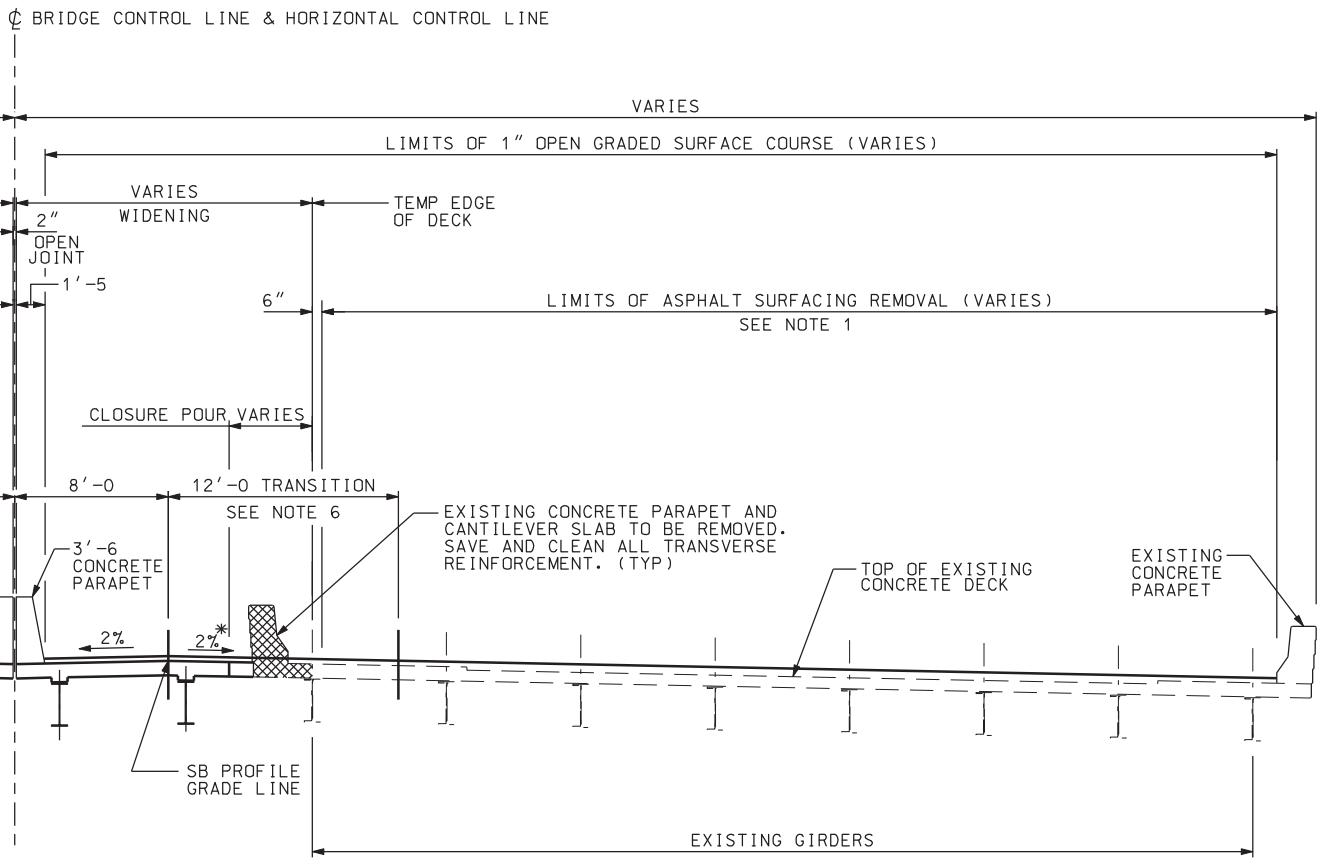


## SECTION

UP STATION
S SLOPE MAY VARY

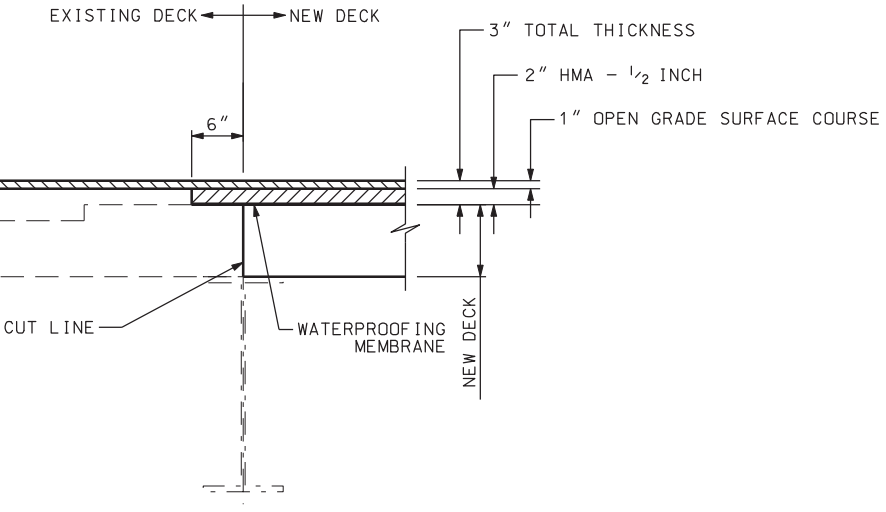


## DETAIL "A"

| NO. | DATE | BY | REMARKS |
|---|---|---|---|
| | | | |

REVISIONS

UTAH DEPARTMENT OF TRANSPORTATION
SALT LAKE CITY, UTAH
HDR ENGINEERING, INC.

DESIGN RDH 11/04 CHECK GCG 11/04
DRAWN JG 11/04 CHECK RDH 11/04
QUANT. RDH 11/04 CHECK GCG 11/04

APPROVAL RECOMM. DATE SENIOR DESIGN ENGR.
APPROVED FOR USE BY UDOT DATE UDOT BRIDGE ENGR.

I-15; CORRIDOR IN UTAH COUNTY
BRIDGE REHABILITATION
DECK OVERLAY DETAILS 1

PROJECT NUMBER SP-15-6(52)241

UTAH
COUNTY

M-91
DRG. NO.

SHT. 10 OF 11

## TABLE I

| BRIDGE NO. | THICKNESS ASPHALT* SURFACING REMOVAL |
|---|---|
| C-340 (NB) | $2\frac{5}{8}''$ |
| C-340 (SB) | $2\frac{5}{8}''$ |
| C-341 (NB) | $3\frac{1}{4}''$ |
| C-341 (SB) | $3\frac{1}{4}''$ |
| C-342 (NB) | $2\frac{1}{4}''$ |
| C-342 (SB) | $2\frac{1}{4}''$ |
| F-9 (NB) | $1\frac{3}{8}''$ |
| F-9 (SB) | $2\frac{7}{8}''$ |
| C-343 (NB) | $2\frac{3}{4}''$ |
| C-343 (SB) | 3″ |
| C-345 (NB) | 2″ |
| C-345 (SB) | $3\frac{1}{2}''$ |
| C-346 (NB) | $3\frac{1}{8}''$ |
| C-346 (SB) | $3\frac{1}{8}''$ |
| C-352 (NB) | $5\frac{3}{8}''$ |
| C-352 (SB) | $5\frac{3}{8}''$ |
| C-353 (NB) | $4\frac{1}{2}''$ |
| C-353 (SB) | $4\frac{3}{8}''$ |
| F-13 (NB) | $2\frac{1}{4}''$ |
| F-13 (SB) | $2\frac{1}{4}''$ |
| F-14 (NB) | $1\frac{3}{4}''$ |
| F-14 (SB) | $1\frac{3}{4}''$ |
| F-15 (NB) | $2\frac{1}{4}''$ |
| F-15 (SB) | $2\frac{1}{4}''$ |
| F-16 (NB) | $2\frac{1}{4}''$ |
| F-16 (SB) | 1″ |

* THICKNESSES OF EXISTING ASPHALT OVERLAY SURFACES TO BE REMOVED ARE BASED ON DECK CORE SAMPLES. THE CONTRACTOR WILL TAKE PRECAUTIONS TO PREVENT DAMAGE TO CONCRETE SURFACES (DECKS, PARAPET, HAUNCHES, ETC.) AND EXPANSION JOINTS DURING MILLING OPERATIONS. ACTUAL THICKNESSES FOR REMOVAL MAY VARY FROM THOSE SHOWN IN THE ABOVE TABLE.

1″ S
CENT
DO N
OR E
CUT

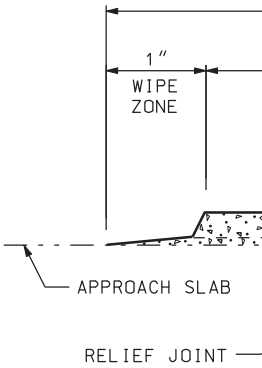


RELIEF JO

NOTES:

1.- USE OVE
AND ALC
WHERE F

2.- APPLY T
JOINTS

DGN File: IP_PWP:dms1717\4433_rehab_S1t.dgn
02-MAY-2005

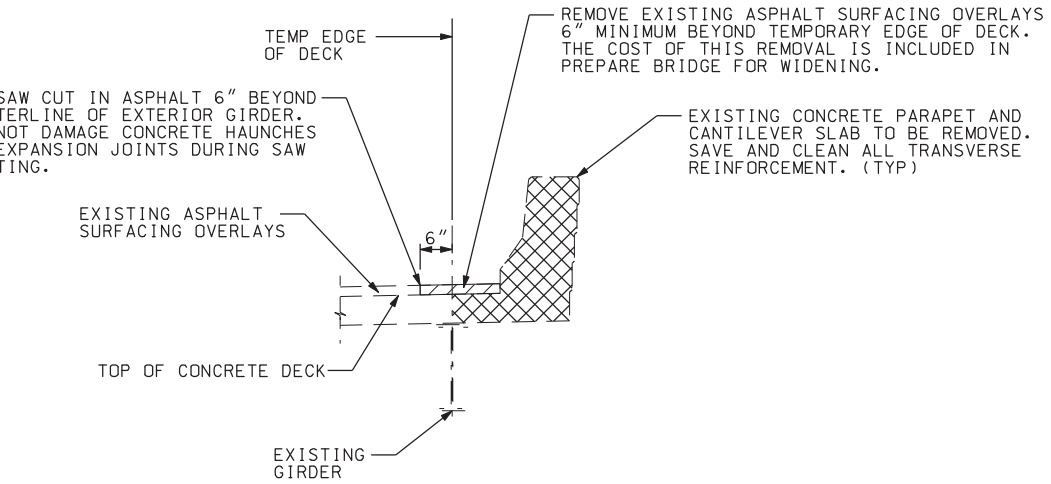


## EXISTING DECK OVERHANG

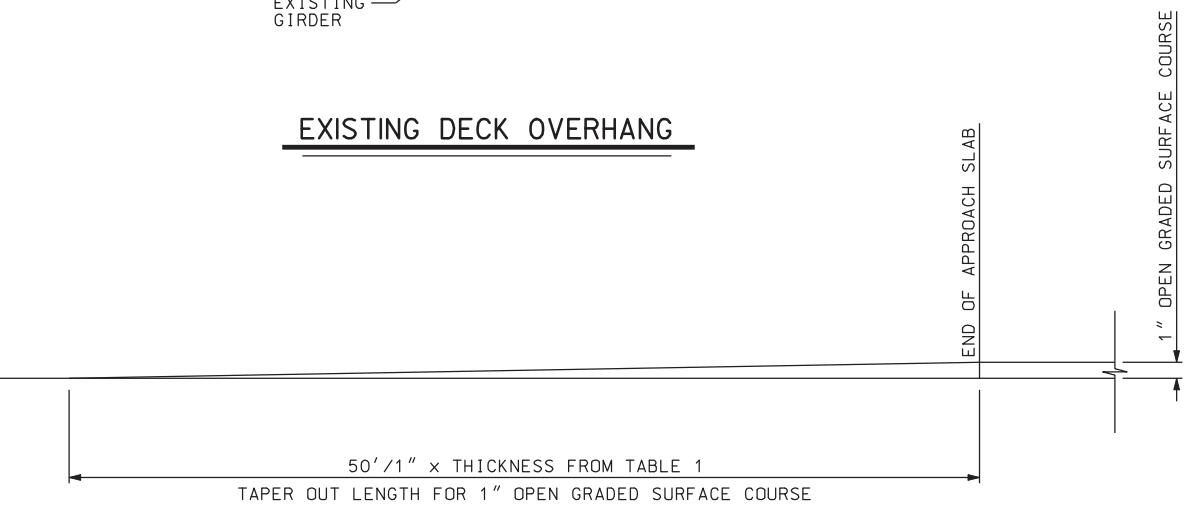


## TYPICAL SURFACING THICKNESS TAPER

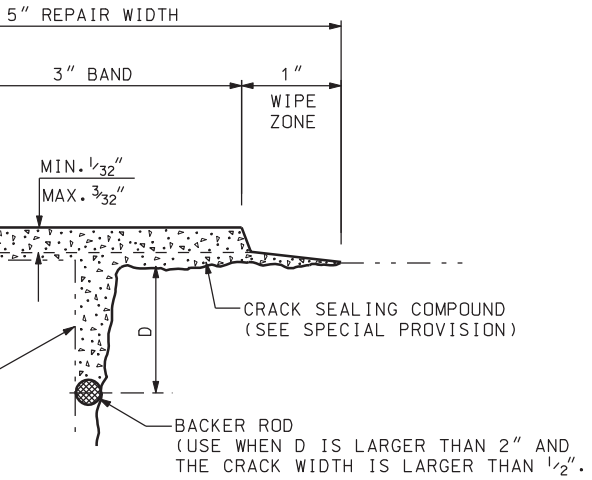


## INT CRACK SEALING DETAIL

ER THE INDICATED RELIEF JOINTS
ONG THE APPROACH SLAB SIDES
REQUIRED.

THE CRACK SEALING OF THE ABOVE
BEFORE THE NEW OVERLAY WORK.

| NO. | DATE | BY | REMARKS |
|---|---|---|---|

REVISIONS

UTAH DEPARTMENT OF TRANSPORTATION
SALT LAKE CITY, UTAH
HDR ENGINEERING, INC.

DESIGN RDH 11/04 CHECK GCG 11/04
DRAWN JG 11/04 CHECK RDH 11/04
QUANT. RDH 11/04 CHECK GCG 11/04

APPROVAL RECOMM. DATE SENIOR DESIGN ENGR.
APPROVED FOR USE BY UDOT DATE UDOT BRIDGE ENGR.

I-15; CORRIDOR IN UTAH COUNTY
BRIDGE REHABILITATION
DECK OVERLAY DETAILS 2
PROJECT NUMBER SP-15-6(52)241

UTAH
COUNTY

M-91
DRG. NO.

SHT. 11 OF 11

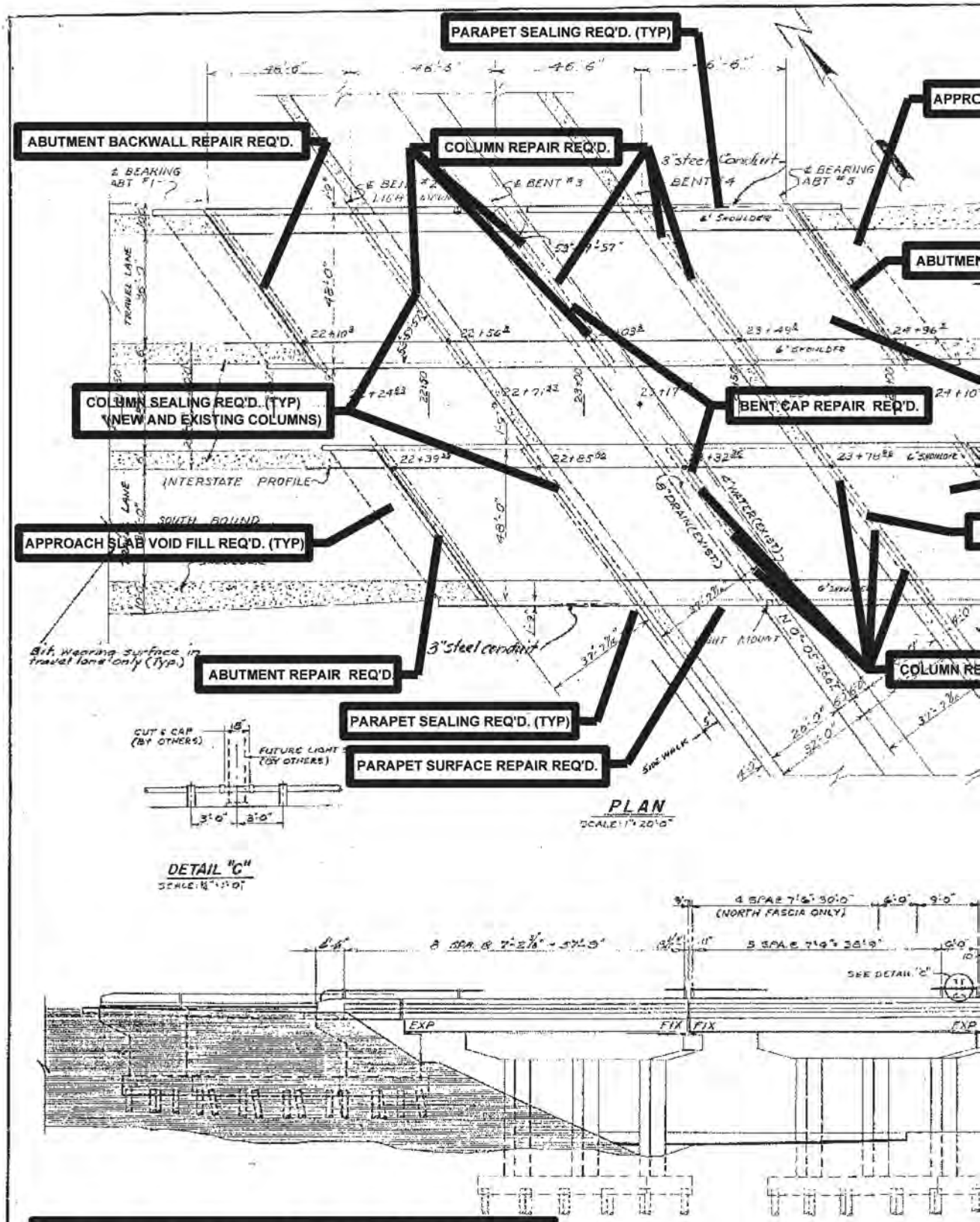


# FOR INFORMATION ONLY

**EXCEPT TO INDICATE LOCATION OF REQUIRED WORK**

| FED. ROAD DIST. NO. | STATE | FED. AID PROJ. NO. | FISCAL YEAR | SHEET NO. | TOTAL SHEETS |
|---|---|---|---|---|---|
| U.T. | UTAH | | | | 10 |

ACH SLAB VOID FILL REQ'D. (TYP)

NT REPAIR REQ'D.

INTERSTATE PROFILE

COLUMNS AND BENT WALL SEALING REQ'D. (TYP)

RAIR REQ'D.

* ASPHALT SURFACING REMOVAL REQ'D. (TYP)
* WATERPROOFING MEMBRANE REQ'D. (TYP)
* ASPHALT SURFACING REQ'D. (TYP)
( NEW AND EXISTING DECK AND APPROACHES)

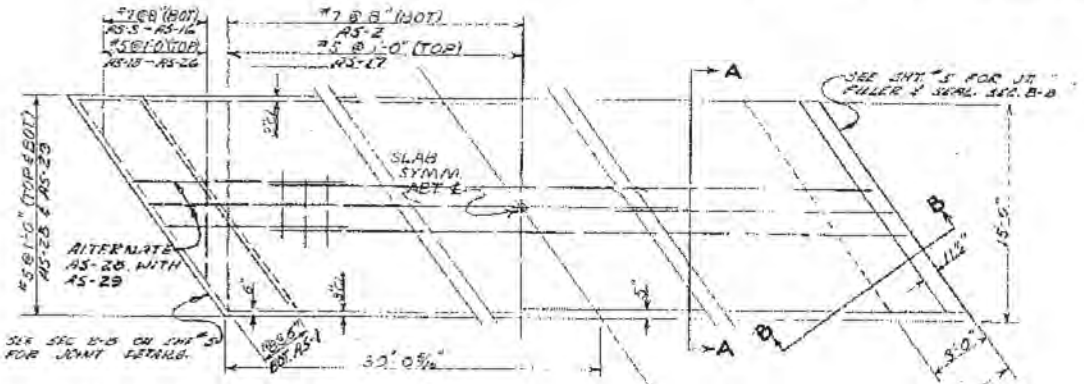


APPROACH SLAB

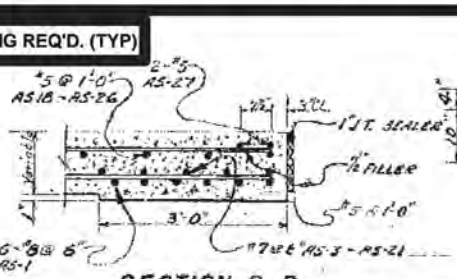


SECTION B-B
SCALE 3/4" = 1'-0"

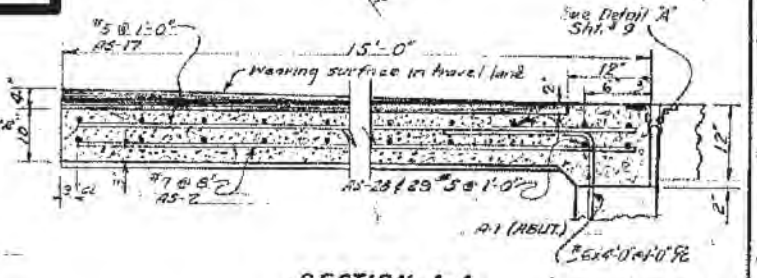


SECTION A-A
SCALE 3/4" = 1'-0"

NOTE:
1. FOR RAILING DETAILS SEE SHEET ST-1.
2. POINTS ON RAILING MARKED "NOT BOLTED" IN ELEVATION VIEW INDICATE THAT ONE END OF THE RAIL IS TO BE LEFT LOOSE IN THE POST TO PROVIDE MOVEMENT FOR EXPANSION OR CONTRACTION.
3. FOR ACCESS ROWY. GEOMETRICS & CONTROL OF FILL SEE FOOTING & FOUNDATION PLAN.

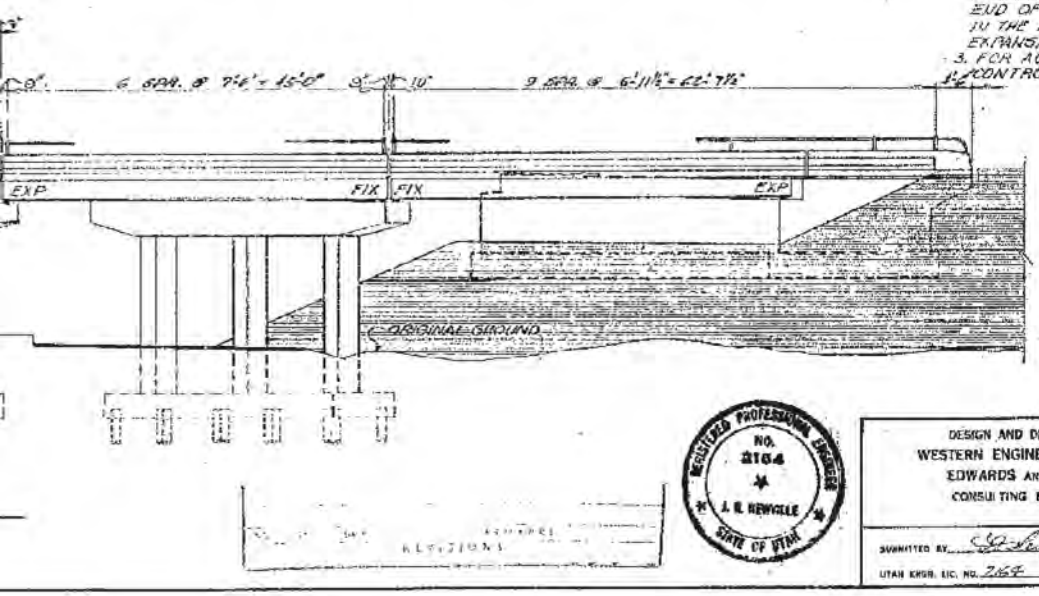


PLAN & ELEVATION

SHEET 2 OF 12 SHEETS

UTAH STATE ROAD COMMISSION
SALT LAKE CITY, UTAH
BRIDGE DEPARTMENT

NORTH LEHI INTERCHANGE

191'-4 1/4" O.T.O.O. 54" XING ℄ 5th Cont.
STA. 23 + 17.830 I-15-6 (13) 276
LEHI - PROVO UTAH COUNTY

DESIGNED BY B.K. & B.T. SCALE AS SHOWN
DRAWN BY B.W. ISSUED January 15, 1963
TRACED BY B.W. APPROVED D.A. Sharpe
CHECKED BY B.K. & B.T. CHIEF BRIDGE ENGINEER

No. No. Dwg. No. C-340

STRUCTURE I-A

REGISTERED PROFESSIONAL ENGINEER NO. 2164 J. R. NEWCOLLE STATE OF UTAH

DESIGN AND DRAWING BY
WESTERN ENGINEERS, INC. AND
EDWARDS AND KELCEY
CONSULTING ENGINEERS

SUBMITTED BY J. R. Newcolle CHIEF ENGINEER
UTAH ENGR. LIC. NO. 2164

C-340

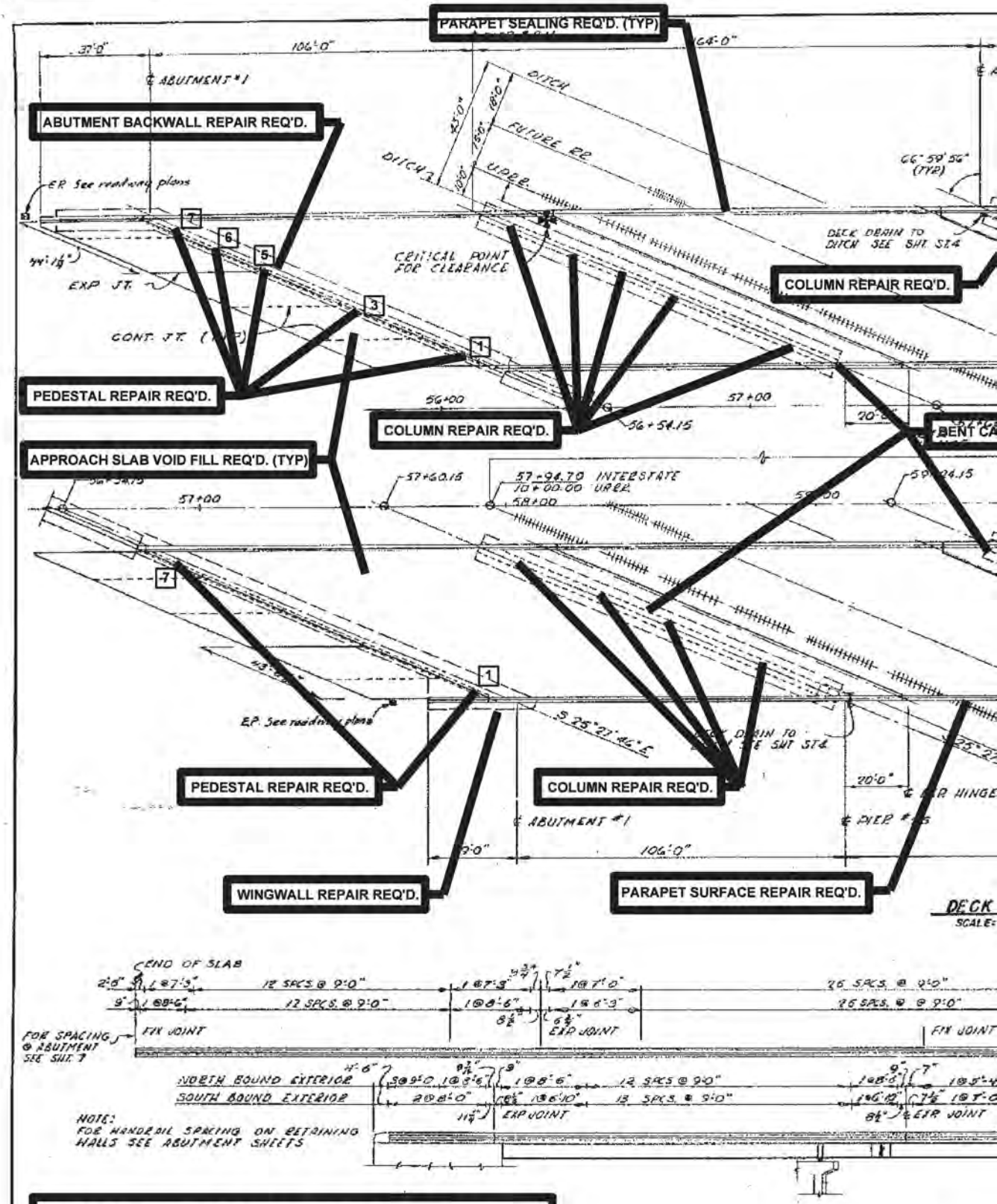


# FOR INFORMATION ONLY

**EXCEPT TO INDICATE LOCATION OF REQUIRED WORK**

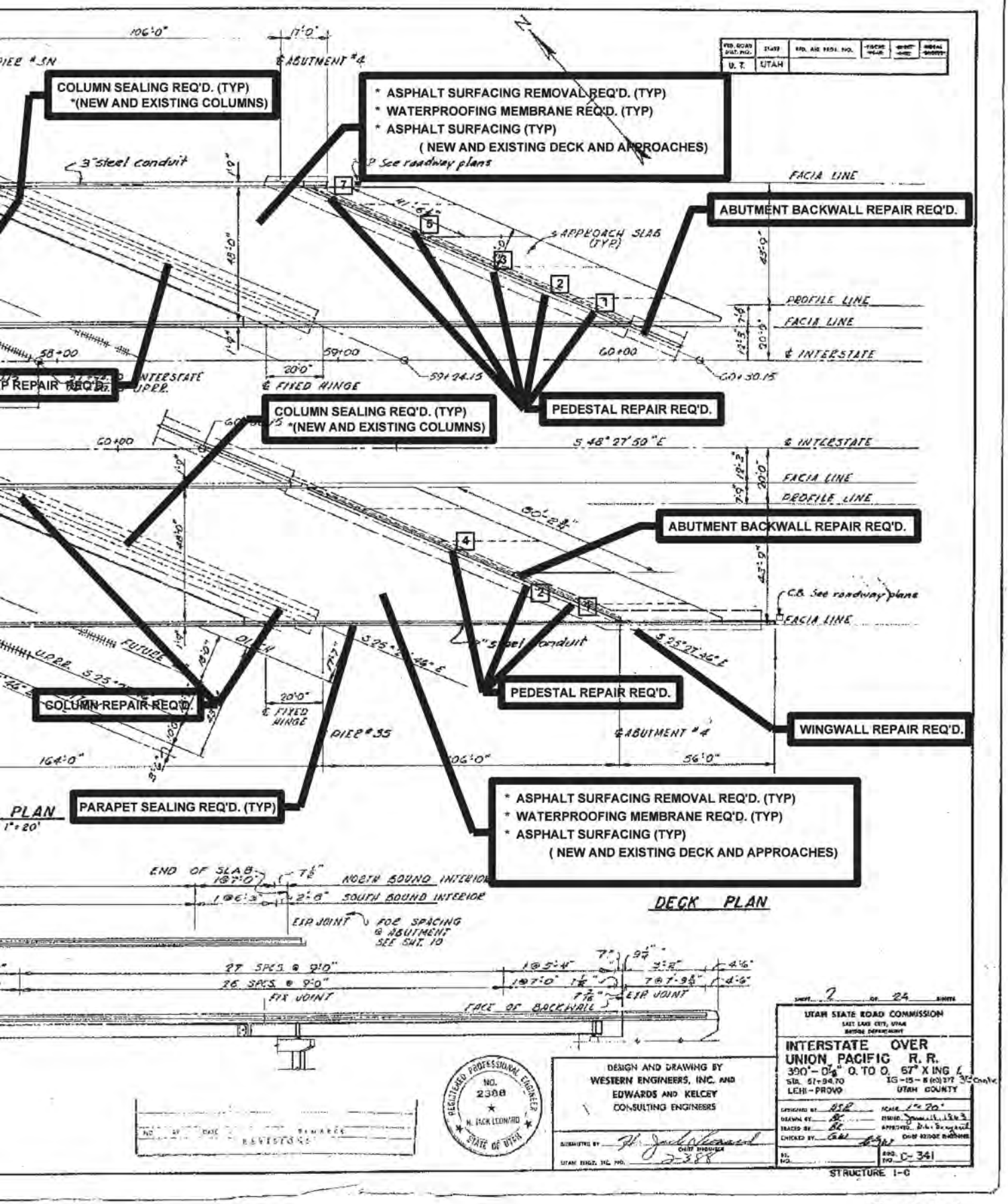
COLUMN SEALING REQ'D. (TYP)
*(NEW AND EXISTING COLUMNS)
* ASPHALT SURFACING REMOVAL REQ'D. (TYP)
* WATERPROOFING MEMBRANE REQ'D. (TYP)
* ASPHALT SURFACING (TYP)
( NEW AND EXISTING DECK AND APPROACHES)
ABUTMENT BACKWALL REPAIR REQ'D.
PEDESTAL REPAIR REQ'D.
COLUMN SEALING REQ'D. (TYP)
*(NEW AND EXISTING COLUMNS)
ABUTMENT BACKWALL REPAIR REQ'D.
PEDESTAL REPAIR REQ'D.
WINGWALL REPAIR REQ'D.
COLUMN REPAIR REQ'D.
PARAPET SEALING REQ'D. (TYP)
* ASPHALT SURFACING REMOVAL REQ'D. (TYP)
* WATERPROOFING MEMBRANE REQ'D. (TYP)
* ASPHALT SURFACING (TYP)
( NEW AND EXISTING DECK AND APPROACHES)
PLAN
1"=20'
DECK PLAN
UTAH STATE ROAD COMMISSION
INTERSTATE OVER
UNION PACIFIC R. R.
390'-0 7/8" O. TO O. 67° X ING
LEHI-PROVO
UTAH COUNTY
DESIGN AND DRAWING BY
WESTERN ENGINEERS, INC. AND
EDWARDS AND KELCEY
CONSULTING ENGINEERS
REGISTERED PROFESSIONAL ENGINEER
NO. 2388
H. JACK LEONARD
STATE OF UTAH
STRUCTURE I-C

C-341

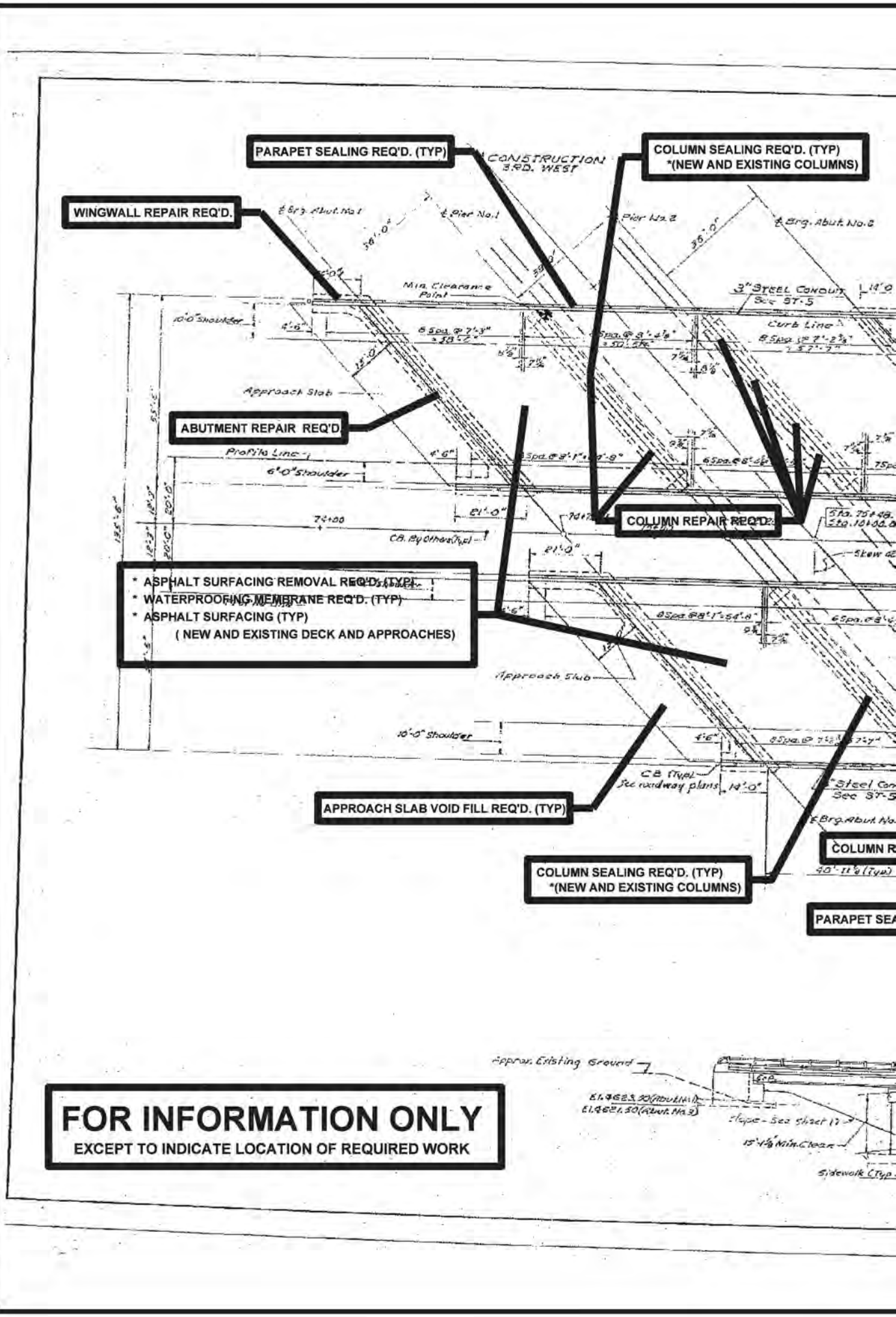


**FOR INFORMATION ONLY**

**EXCEPT TO INDICATE LOCATION OF REQUIRED WORK**

DGN File: P:\Pdms\1717\4433_C-342-rehabsign
02-MAY-2005

| FED. ROAD DIST. NO. | STATE | FED. AID PROJ. NO. | FISCAL YEAR | SHEET NO. | TOTAL SHEETS |
|---|---|---|---|---|---|
| UT | UTAH | | | | |

ABUTMENT BACKWALL REPAIR REQ'D.

APPROACH SLAB VOID FILL REQ'D. (TYP)

ABUTMENT BACKWALL REPAIR REQ'D.

ABUTMENT REPAIR REQ'D

WINGWALL REPAIR REQ'D.

BENT CAP REPAIR REQ'D.

PARAPET REPAIR REQ'D.

PLAN

SCALE: 1/16"=1'-0"

NOTES:
FOR RAILING DETAILS SEE DRG NO'S. ST-1 AND MR-1.
FOR JOINT FILLER DETAILS AT PARAPETS SEE SHEET 12

DECK PLAN & ELEVATION

ELEVATION

SCALE: 1/16"=1'-0"

REGISTERED PROFESSIONAL ENGINEER NO. 2164 J. R. NEWBITT STATE OF UTAH

DESIGN AND DRAWING BY
WESTERN ENGINEERS, INC. AND
EDWARDS AND KELCEY
CONSULTING ENGINEERS

SUBMITTED BY: CHIEF ENGINEER
UTAH ENGR. LIC. NO. 2164

SHEET 2 OF 19 SHEETS

UTAH STATE ROAD COMMISSION
SALT LAKE CITY, UTAH
BRIDGE DEPARTMENT

LEHI 3RD WEST OVERPASS
155'-7 1/8" O. TO O. 133° XING L
STA. 75+16.06 2-15-6 (1)270
LEHI-PROVO UTAH COUNTY

DRAWN BY KY SCALE AS NOTED
CHECKED BY EG ISSUED Oct. 29, 1968
TRACED BY
CHECKED BY
APPROVED D.L. Sorensen
CHIEF BRIDGE ENGINEER

No. C-342

STRUCTURE 6-D2

C-342

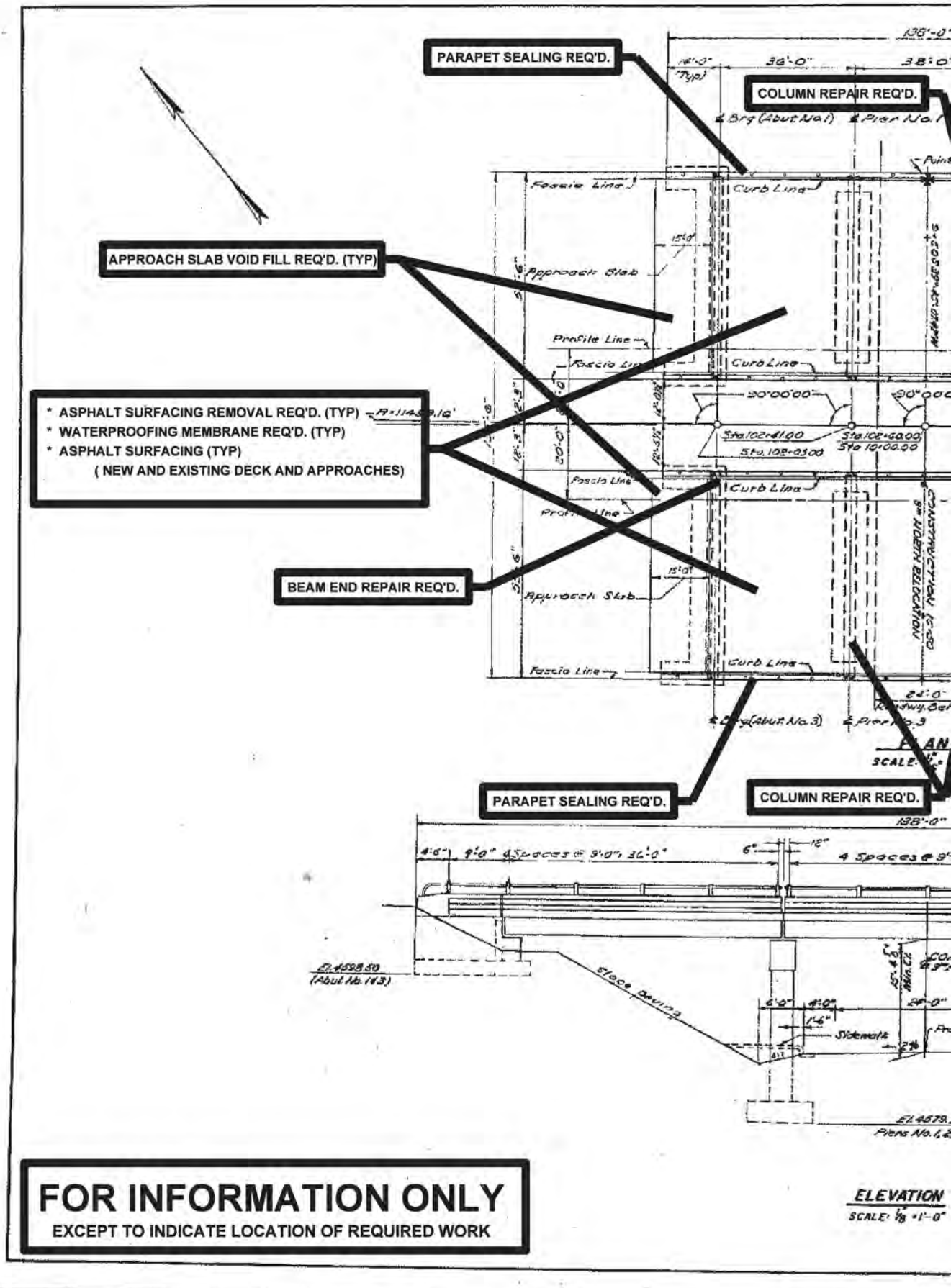


# FOR INFORMATION ONLY

**EXCEPT TO INDICATE LOCATION OF REQUIRED WORK**

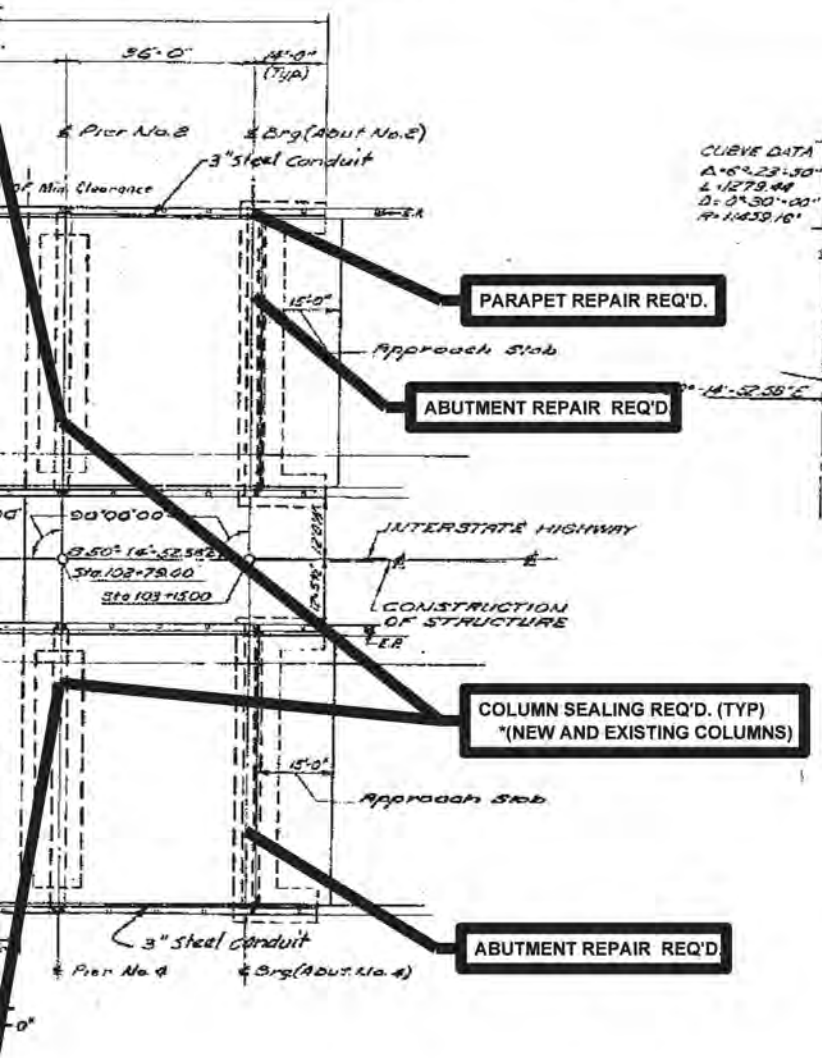


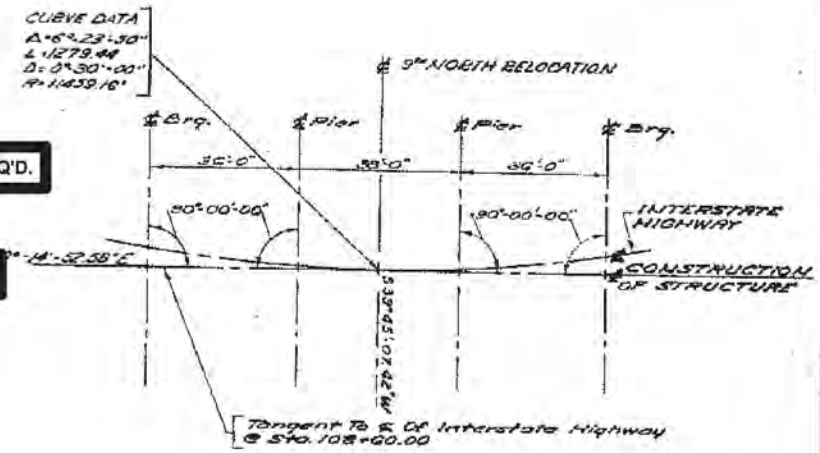


**CONSTRUCTION LAYOUT**

SCALE: NOT TO SCALE

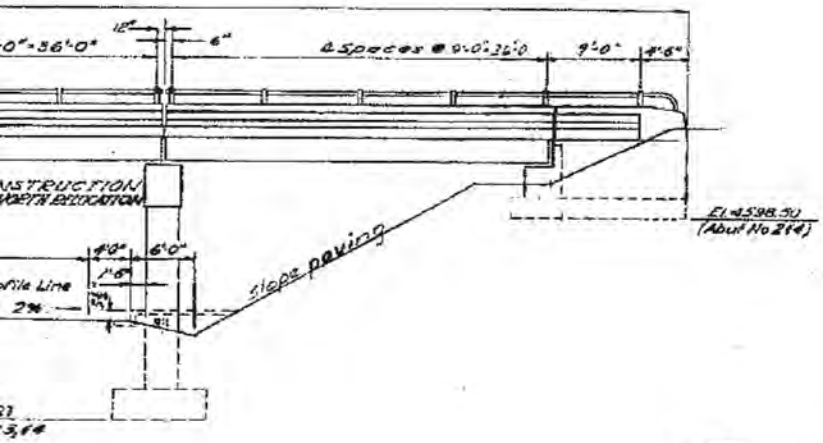


NOTES:
FOR RAILING DETAILS SEE DRG. NO. ST-1

**DECK PLAN**

SHEET 2 OF 13 SHEETS

| FED. ROAD DIST. NO. | STATE | FED. AID PROJ. NO. | FISCAL YEAR | SHEET NO. | TOTAL SHEETS |
|---|---|---|---|---|---|
| U 7 | UTAH | | | | |

23

UTAH STATE ROAD COMMISSION
SALT LAKE CITY, UTAH
BRIDGE DEPARTMENT

LEHI 9TH NORTH RELOCATION OVERPASS
114'-4" O. TO O.
STA. 102+60.00 I-15-6(98)276
LEHI - PROVO UTAH COUNTY

DESIGN AND DRAWING BY
WESTERN ENGINEERS, INC. AND
EDWARDS AND KELCEY
CONSULTING ENGINEERS

SUBMITTED BY ..... CHIEF ENGINEER
UTAH ENGR. LIC. NO. 2164

DRAWN BY KY
PLANS BY TQ
TRACED BY
CHECKED BY KG

SCALE AS NOTED

Dwg. No. F-9

REVISIONS

STRUCTURE I-FE

F-9

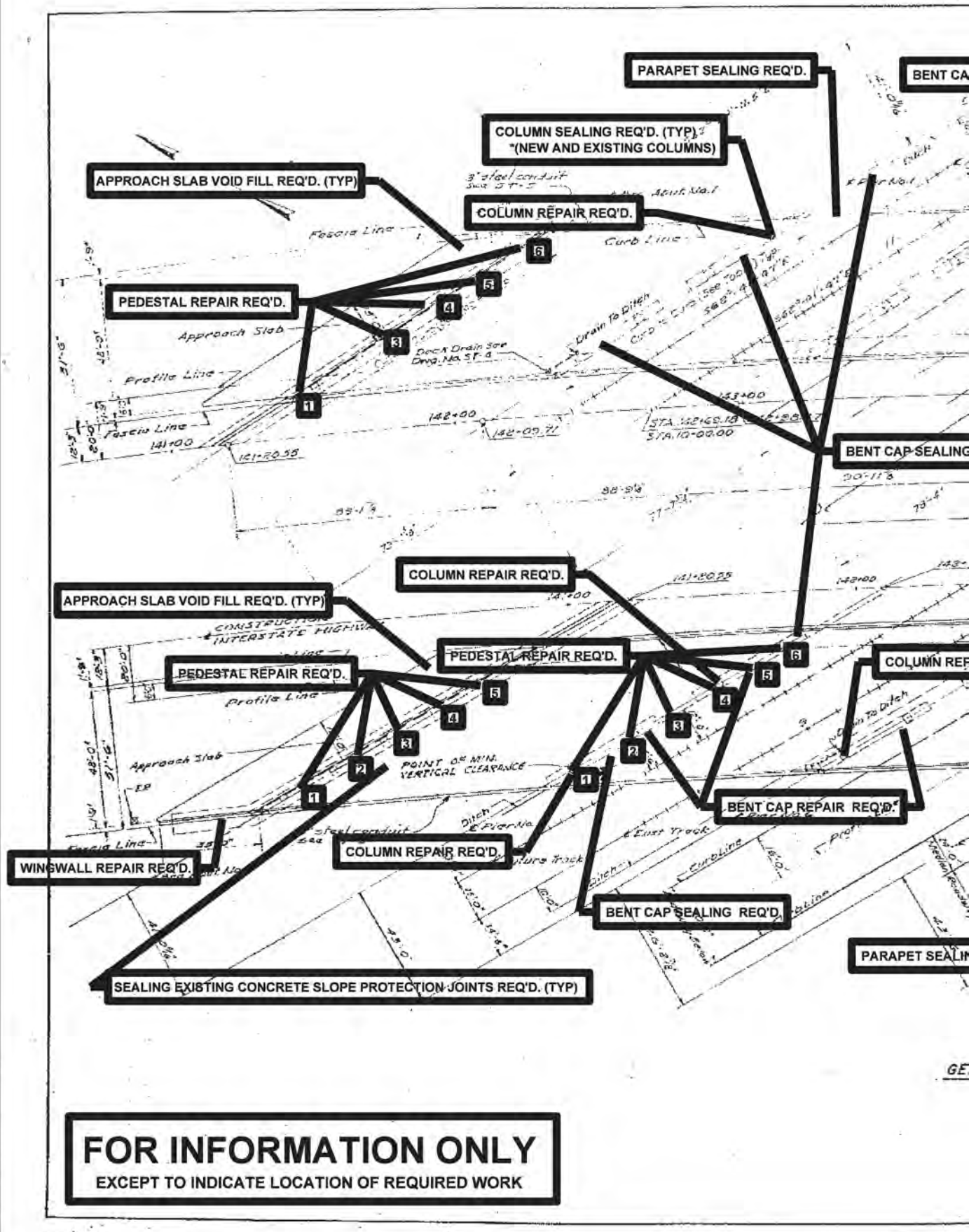


**FOR INFORMATION ONLY**

**EXCEPT TO INDICATE LOCATION OF REQUIRED WORK**

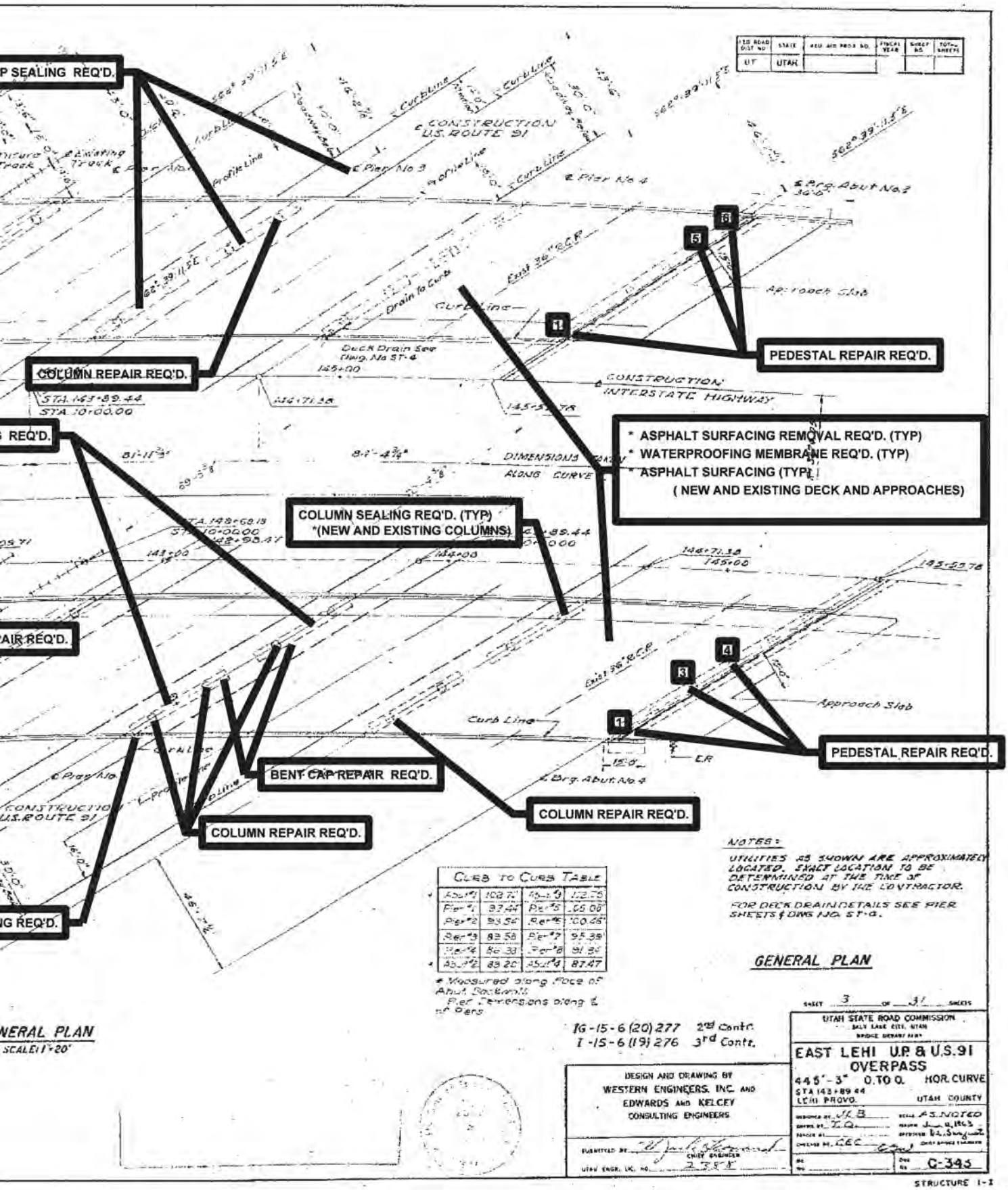


| CURB TO CURB TABLE | | | |
|---|---|---|---|
| Abut #1 | 102.71 | Abut #3 | 112.76 |
| Pier #1 | 97.44 | Pier #5 | 105.00 |
| Pier #2 | 93.54 | Pier #6 | 100.46 |
| Pier #3 | 89.58 | Pier #7 | 95.39 |
| Pier #4 | 86.33 | Pier #8 | 91.86 |
| Abut #2 | 83.20 | Abut #4 | 87.47 |

* Measured along face of Abut. Backwalls
Pier dimensions along ℄ of Piers

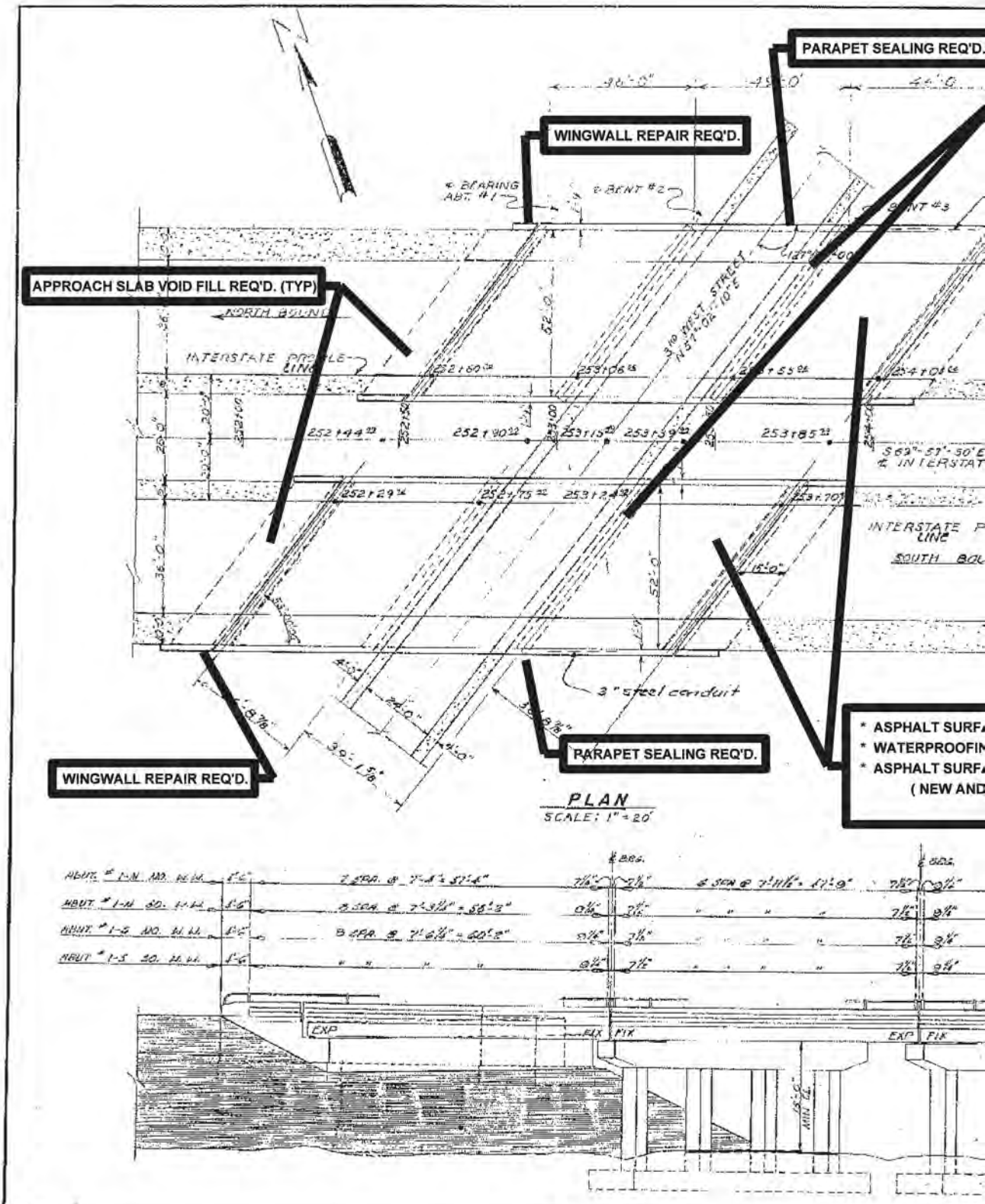


**FOR INFORMATION ONLY**

**EXCEPT TO INDICATE LOCATION OF REQUIRED WORK**

[redacted]

| FED. ROAD DIST. NO. | STATE | FED. AID PROJ. NO. | FISCAL YEAR | SHEET NO. | TOTAL SHEETS |
|---|---|---|---|---|---|
| U.T. | UTAH | | POST WAR | | |

11

COLUMN SEALING REQ'D. (TYP)
*(NEW AND EXISTING COLUMNS)

3" steel conduit & BEARING ABT. #4

ACING REMOVAL REQ'D. (TYP)
G MEMBRANE REQ'D. (TYP)
ACING (TYP)
EXISTING DECK AND APPROACHES)

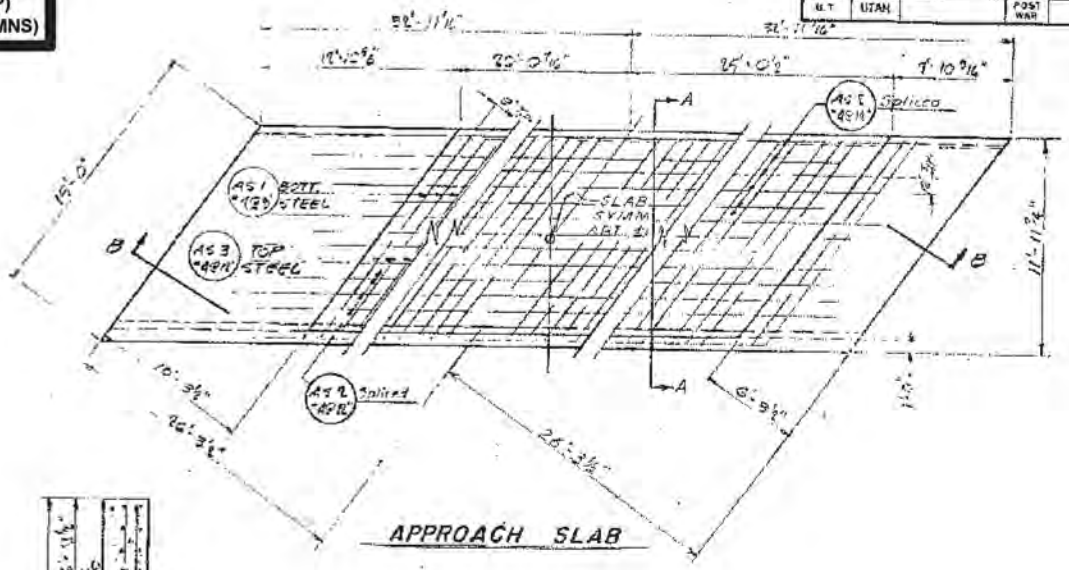


APPROACH SLAB

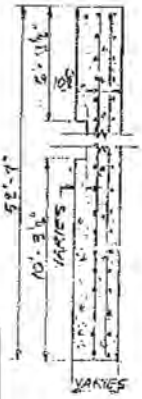


SECTION B-B

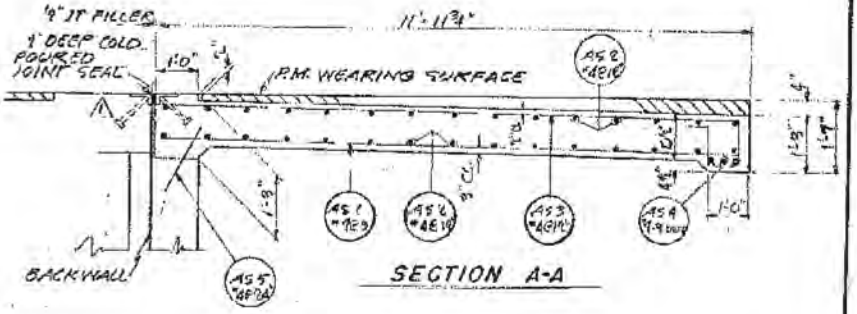


SECTION A-A

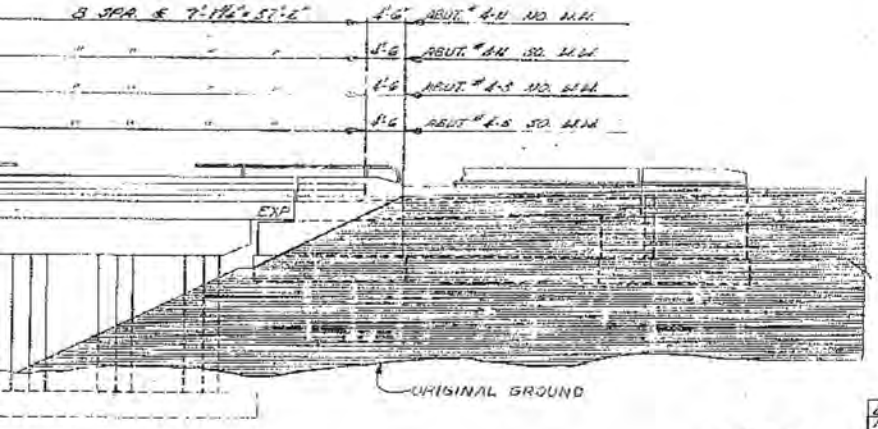


NOTE:
1. FOR RAILING DETAILS SEE DRWG. ST-1
2. POINTS ON RAILING MARKED "NOT BOLTED" IN ELEVATION VIEW INDICATE THAT ONE END OF THE RAIL IS TO BE LEFT LOOSE IN THE POST TO PROVIDE MOVEMENT FOR EXPANSION OR CONTRACTION.

PLAN & ELEVATION

SHEET 2 OF 14 SHEETS

| NO. | BY | DATE | DESCRIPTION |
|---|---|---|---|
| 1 | RJB | 6-25-61 | SHOW GUARD EX. ON DECK JOINTS |

REVISIONS

DESIGN AND DRAWING BY
WESTERN ENGINEERS, INC. AND
EDWARDS AND KELCEY
CONSULTING ENGINEERS

SUBMITTED BY: [signature] CHIEF ENGINEER
UTAH ENGR. LIC. NO. 2164

REGISTERED PROFESSIONAL ENGINEER NO. 2164 F. R. NEWVILLE STATE OF UTAH

UTAH STATE ROAD COMMISSION
SALT LAKE CITY, UTAH
BRIDGE DEPARTMENT

AMERICAN FORK 3RD WEST OVERPASS
146'-5 1/8" Q TO Q. 127° XING ∠
STA. 253+15.495 1-15-6 (3) 271 (13)
LEHI-PROVO / UTAH COUNTY

DESIGNED BY BK & BT
DRAWN BY SW
TRACED BY RW
CHECKED BY BK & BT
NAME AS SHOWN
ISSUED May 22, 1961
APPROVED D. L. Sargent CHIEF BRIDGE ENGINEER

BR. No.
DWG. No. C-345

STRUCTURE, 1-L

C-345

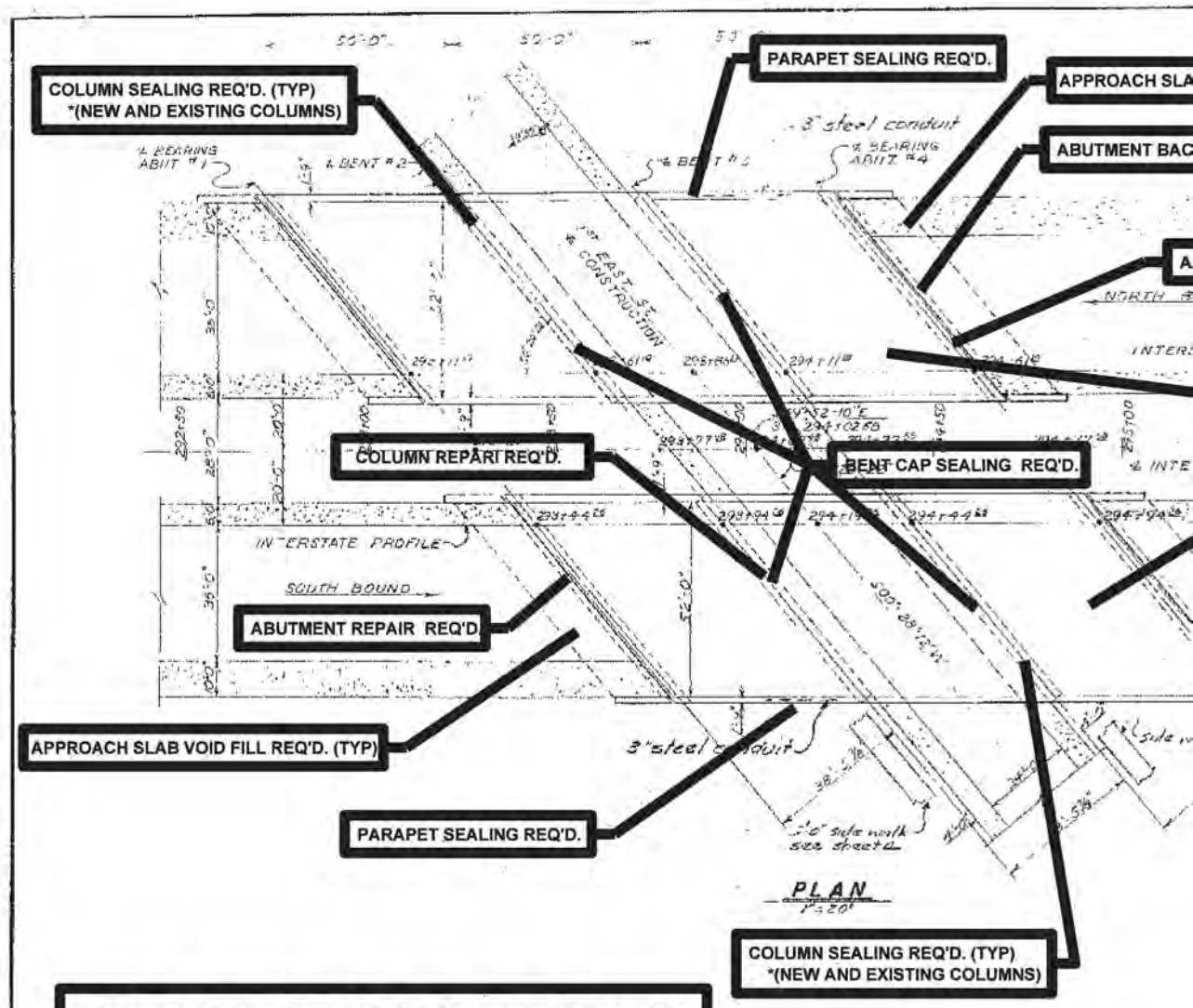


# FOR INFORMATION ONLY

**EXCEPT TO INDICATE LOCATION OF REQUIRED WORK**

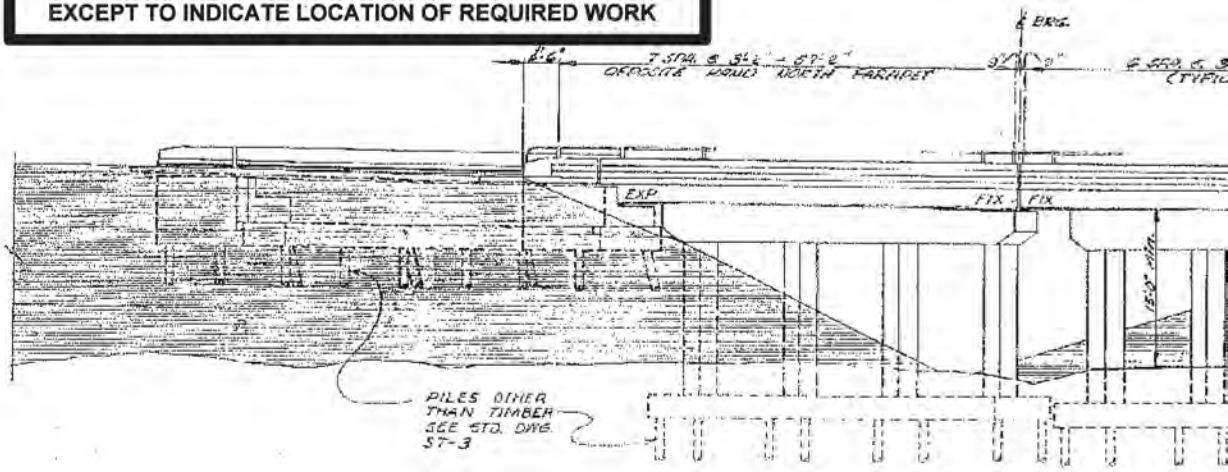


[redacted]

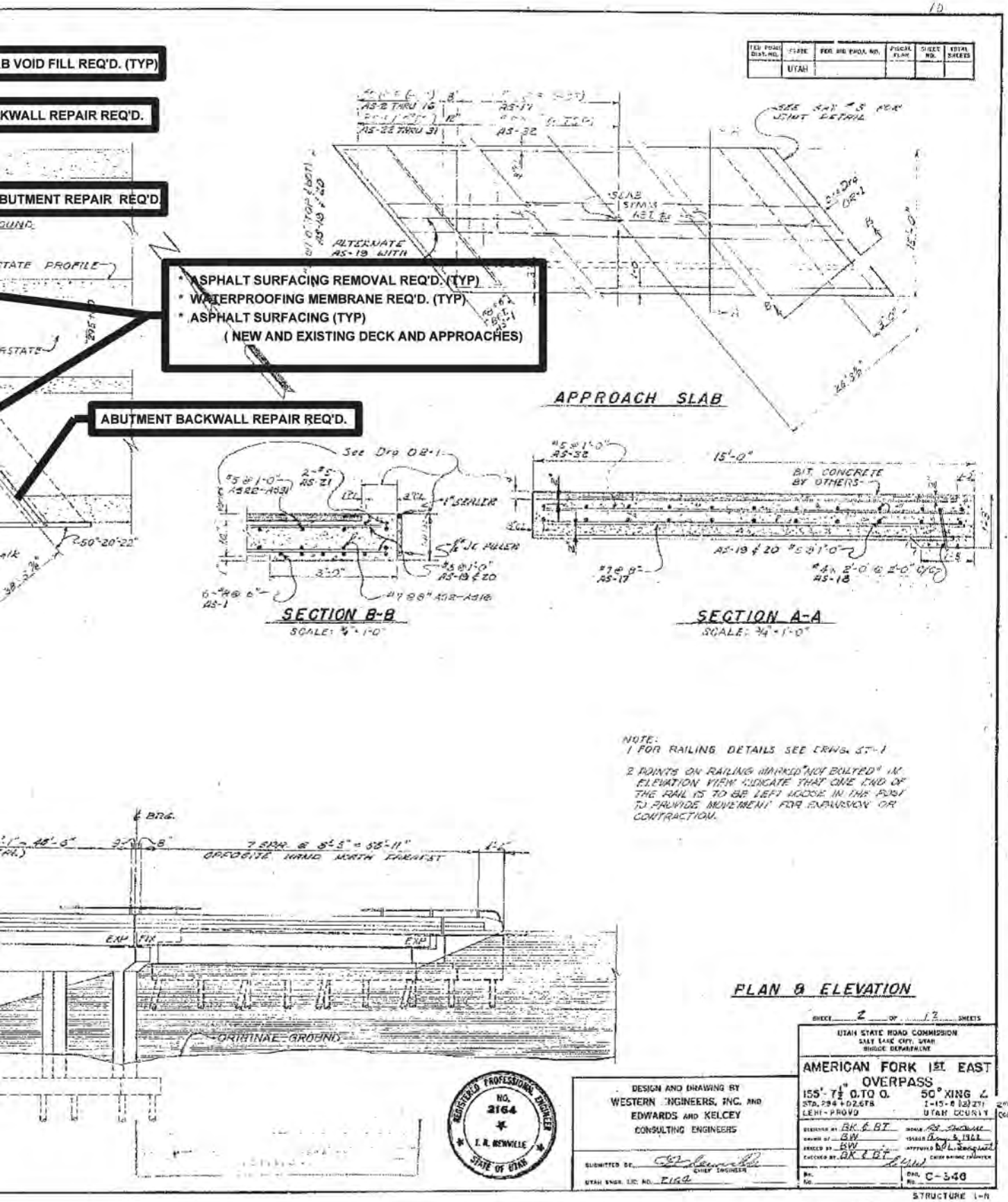
B VOID FILL REQ'D. (TYP)
KWALL REPAIR REQ'D.
BUTMENT REPAIR REQ'D.
* ASPHALT SURFACING REMOVAL REQ'D. (TYP)
* WATERPROOFING MEMBRANE REQ'D. (TYP)
* ASPHALT SURFACING (TYP)
( NEW AND EXISTING DECK AND APPROACHES)
ABUTMENT BACKWALL REPAIR REQ'D.
APPROACH SLAB
SECTION B-B
SCALE: 3/4" = 1'-0"
SECTION A-A
SCALE: 3/4" = 1'-0"
NOTE:
1 FOR RAILING DETAILS SEE DRWG. ST-1
2 POINTS ON RAILING MARKED "NOT BOLTED" IN ELEVATION VIEW INDICATE THAT ONE END OF THE RAIL IS TO BE LEFT LOOSE IN THE POST TO PROVIDE MOVEMENT FOR EXPANSION OR CONTRACTION.
OPPOSITE HAND NORTH FORAFST
ORIGINAL GROUND
PLAN & ELEVATION
UTAH STATE ROAD COMMISSION
SALT LAKE CITY, UTAH
BRIDGE DEPARTMENT
AMERICAN FORK 1ST EAST OVERPASS
155'-7½" O.TO O.
50° XING ∠
STA. 294+02.678
LEHI-PROVO
UTAH COUNTY
DESIGN AND DRAWING BY
WESTERN ENGINEERS, INC. AND
EDWARDS AND KELCEY
CONSULTING ENGINEERS
REGISTERED PROFESSIONAL ENGINEER
NO. 2164
I. R. BENVILLE
STATE OF UTAH
DWG. C-346
STRUCTURE 1-A

C-346

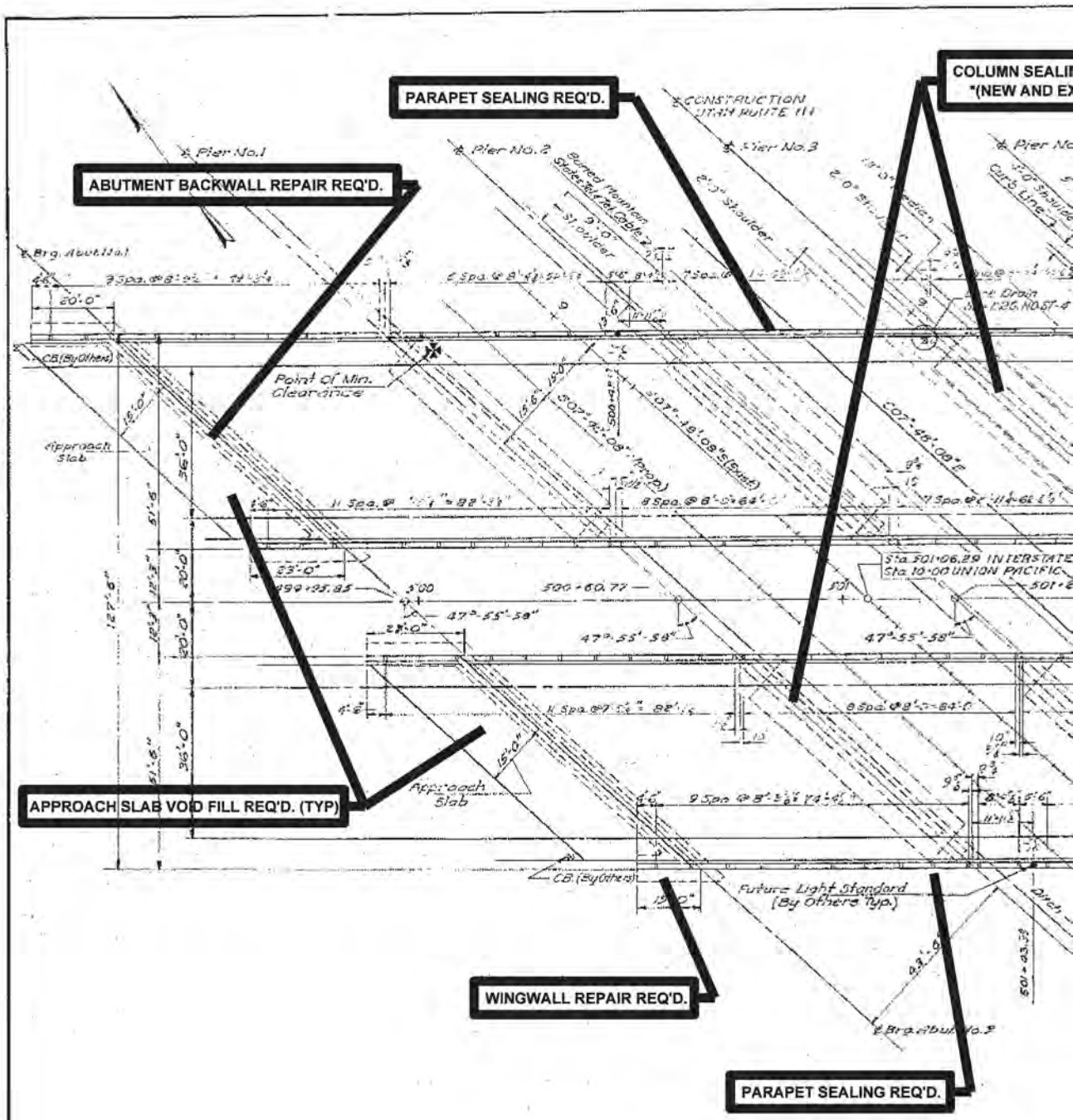


**FOR INFORMATION ONLY**

**EXCEPT TO INDICATE LOCATION OF REQUIRED WORK**

[redacted]

| FED. ROAD DIST. NO. | STATE | FED. AID PROJ. NO. | FISCAL YEAR | SHEET NO. | TOTAL SHEETS |
|---|---|---|---|---|---|
| UT | UTAH | I-15-6(12)270 | POST WAR | 6 | |

NG REQ'D. (TYP)
XISTING COLUMNS)

* ASPHALT SURFACING REMOVAL REQ'D. (TYP)
* WATERPROOFING MEMBRANE REQ'D. (TYP)
* ASPHALT SURFACING (TYP)
( NEW AND EXISTING DECK AND APPROACHES)

SEALING EXISTING CONCRETE SLOPE PROTECTION JOINTS REQ'D. (TYP)

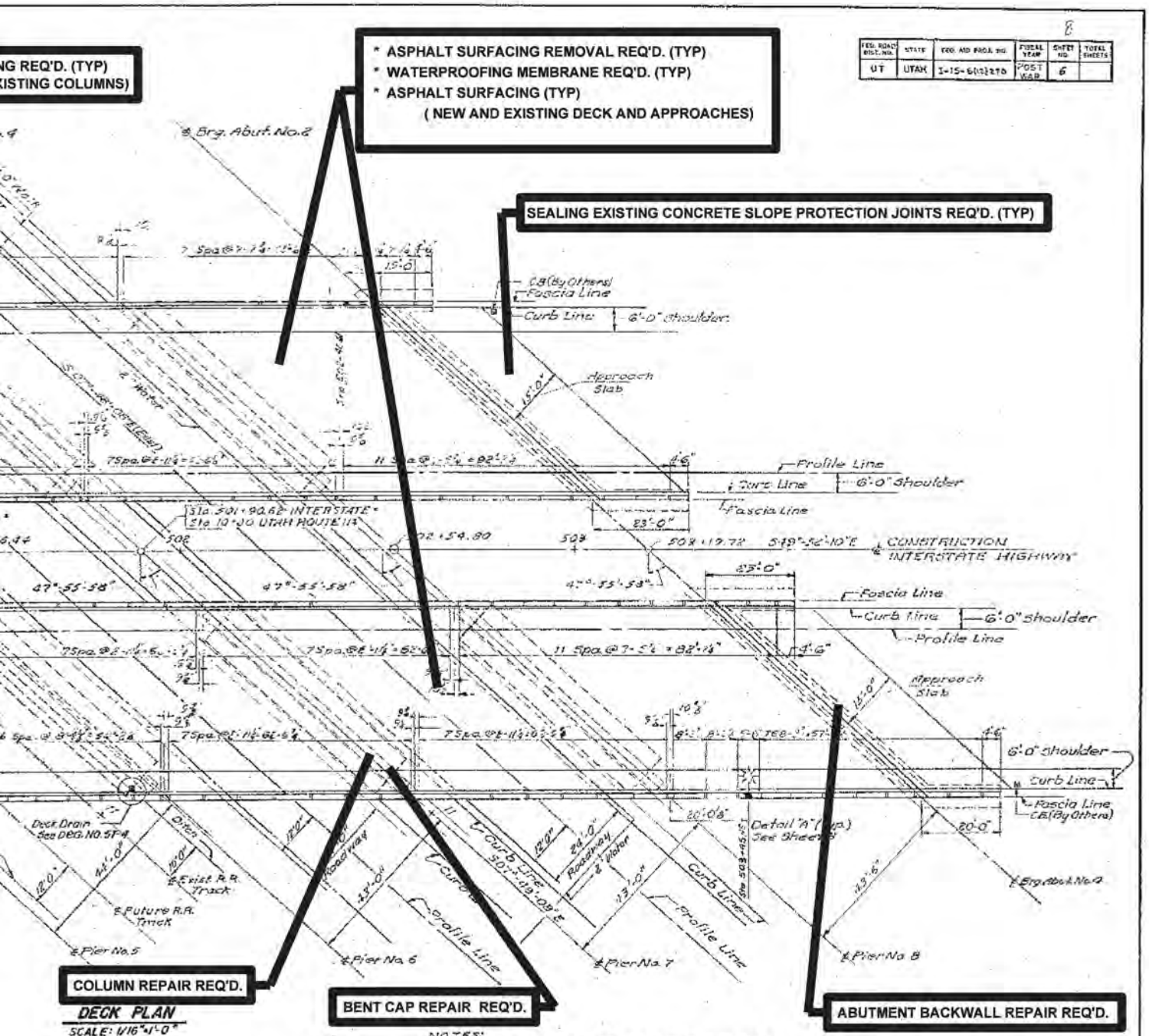


COLUMN REPAIR REQ'D.

BENT CAP REPAIR REQ'D.

ABUTMENT BACKWALL REPAIR REQ'D.

**DECK PLAN**
SCALE: 1/16" = 1'-0"

NOTES:
FOR RAILING DETAILS SEE DRG. NO. ST-1
FOR DETAIL AT LIGHT STANDARDS SEE DETAIL "A" ON SHEET 3 OF 19 SHEETS.
FOR DECK DRAIN DETAILS SEE DRG. NO. ST-4
UTILITIES AS SHOWN ARE APPROXIMATELY LOCATED
HANDRAIL POST SPACING GIVEN ALONG ℄ PARAPET WALL.

**DECK PLAN**

SHEET 2 OF 19 SHEETS

UTAH STATE ROAD COMMISSION
SALT LAKE CITY, UTAH
BRIDGE DEPARTMENT

LINDON U.P. & ST. RTE. 114 OVERPASS
331'-4 1/8" O. TO O. 42° XING ∠
STA. 501+90.62 I-15-6(12)270
LEHI-PROVO UTAH COUNTY

DESIGNED BY A.J.H. SCALE AS NOTED
DRAWN BY T.M. ISSUED May 22, 1964
TRACED BY APPROVED Gil. Singer
CHECKED BY J.L.B. (Total) CHIEF ENGINEER
REV. NO. DWG. NO. C-352

DESIGN AND DRAWING BY
WESTERN ENGINEERS, INC. AND
EDWARDS AND KELCEY
CONSULTING ENGINEERS

SUBMITTED BY ... CHIEF ENGINEER
UTAH ENGR. LIC. NO. 2164

REGISTERED PROFESSIONAL ENGINEER
NO. 2164
A. R. FERRILLE
STATE OF UTAH

STRUCTURE 2-E

C-352

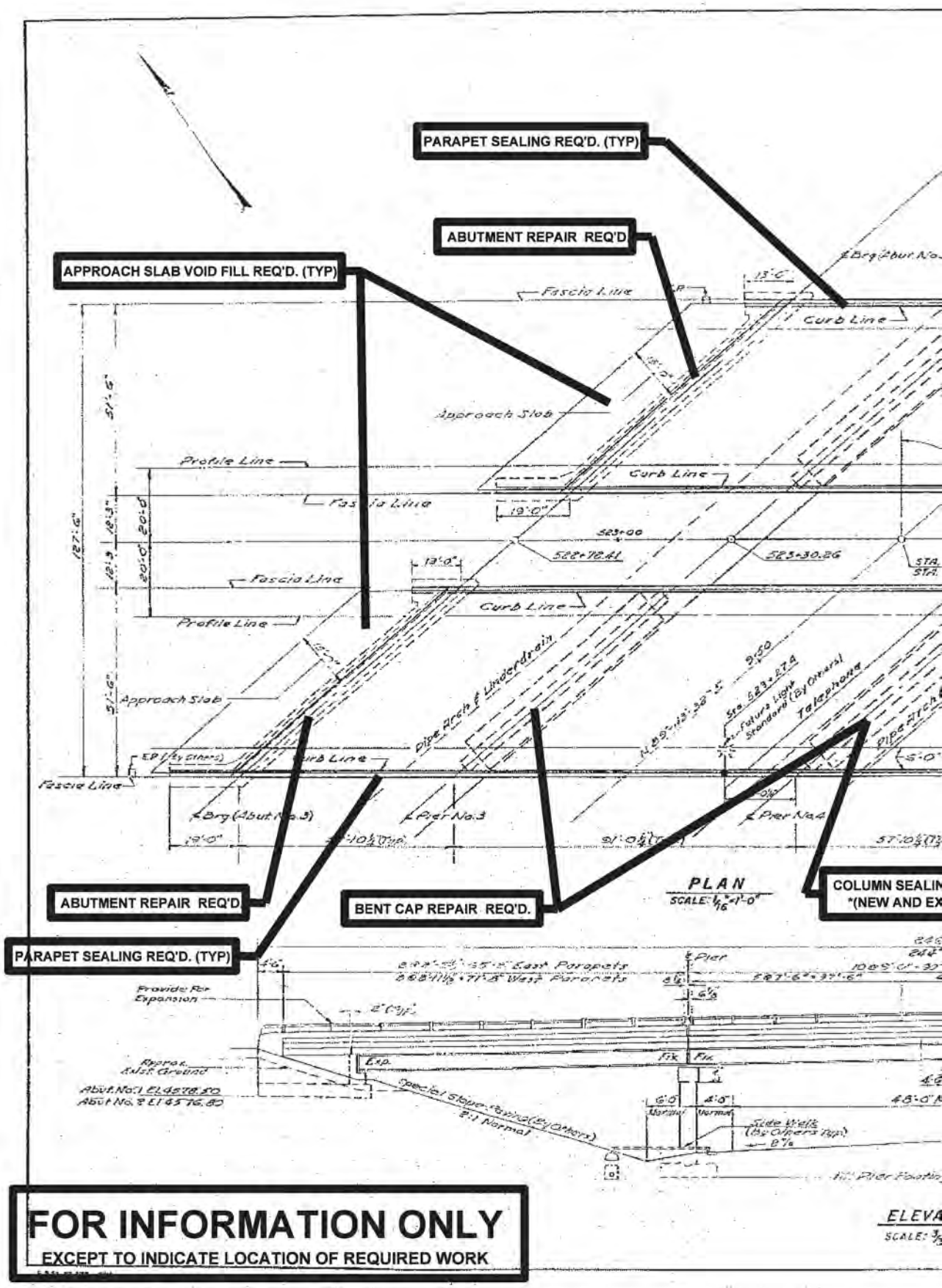
PARAPET SEALING REQ'D. (TYP)
ABUTMENT REPAIR REQ'D
APPROACH SLAB VOID FILL REQ'D. (TYP)
Fascia Line
Curb Line
Approach Slab
Profile Line
Pipe Arch & Underdrain
Telephone
PLAN
ABUTMENT REPAIR REQ'D
BENT CAP REPAIR REQ'D.
PARAPET SEALING REQ'D. (TYP)
Provide for Expansion
Riprap Exist. Ground
Side Walls (By Others Rpr)
FOR INFORMATION ONLY
EXCEPT TO INDICATE LOCATION OF REQUIRED WORK

[redacted]

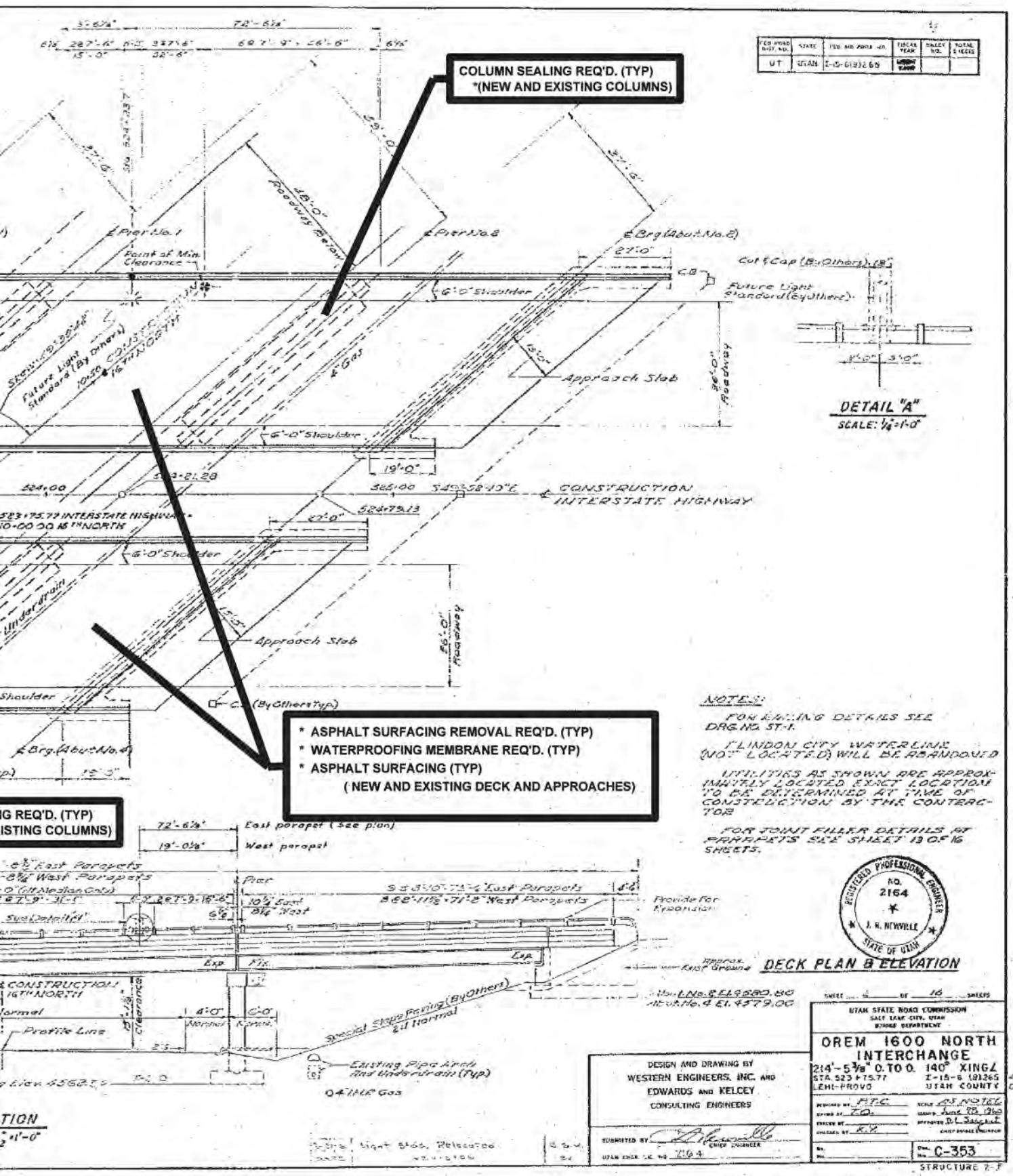
COLUMN SEALING REQ'D. (TYP)
*(NEW AND EXISTING COLUMNS)
* ASPHALT SURFACING REMOVAL REQ'D. (TYP)
* WATERPROOFING MEMBRANE REQ'D. (TYP)
* ASPHALT SURFACING (TYP)
( NEW AND EXISTING DECK AND APPROACHES)
DETAIL "A"
SCALE: 1/4"=1'-0"
DECK PLAN & ELEVATION
NOTES:
FOR RAILING DETAILS SEE DRG. NO. ST-1.
FLINDON CITY WATERLINE (NOT LOCATED) WILL BE ABANDONED
UTILITIES AS SHOWN ARE APPROXIMATELY LOCATED EXACT LOCATION TO BE DETERMINED AT TIME OF CONSTRUCTION BY THE CONTRACTOR
FOR JOINT FILLER DETAILS AT PARAPETS SEE SHEET 13 OF 16 SHEETS.
REGISTERED PROFESSIONAL ENGINEER NO. 2164 J. H. NEWBLE STATE OF UTAH
UTAH STATE ROAD COMMISSION
OREM 1600 NORTH INTERCHANGE
214'-5 3/8" O. TO O. 140° XING
STA. 523+75.77
LEHI-PROVO
UTAH COUNTY
DESIGN AND DRAWING BY
WESTERN ENGINEERS, INC. AND
EDWARDS AND KELCEY
CONSULTING ENGINEERS
C-353
STRUCTURE 2-F

C-353

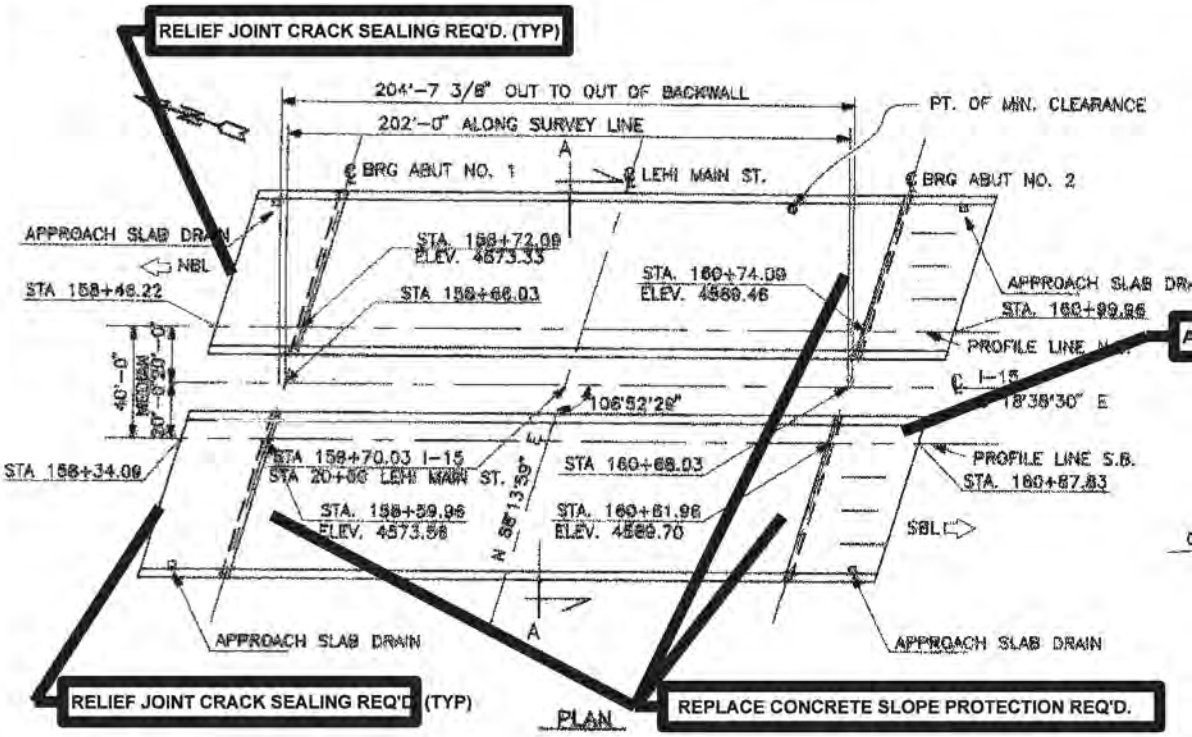


## CURVE DATA

| CURVE 1 | | CURVE 2 | |
|---|---|---|---|
| PI | 141+14.28 | PI | 173+64.81 |
| Δ | 36°13'10" | Δ | 33°22'20" |
| D | 1°45' | D | 1°45' |
| R | 3274.04' | R | 3274.04' |
| T | 1076.74' | T | 981.40' |
| L | 2069.68' | L | 1906.98' |

## I-15 SUPERELEVATION DATA

| STA | LEFT | RIGHT |
|---|---|---|
| 158+50 | -2% | -2% |
| 159+25 | -2% | -2% |
| 161+00 | -2% | 0% |
| 162+76.47 | -2% | +2% |
| 165+50 | -5.1% | +5.1% |

PROFILE

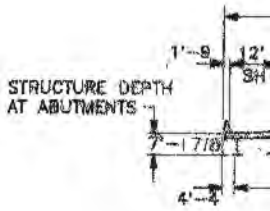


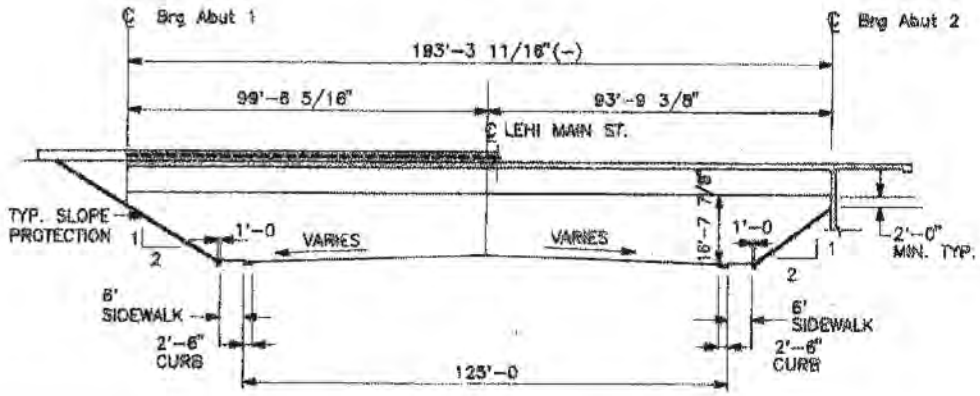


ELEVATION
(NORMAL TO LEHI MAIN ST.)

**FOR INFORMATION ONLY**

EXCEPT TO INDICATE LOCATION OF REQUIRED WORK

C-783

DGN Files IP PWPubes\717\4433\C-783_rehabsum

02-MAY-2005

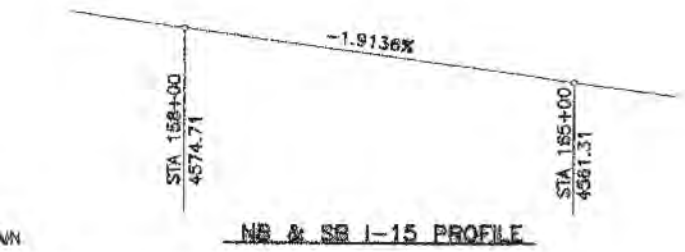


NB & SB I-15 PROFILE

APPROACH SLAB CATCH BASIN REQ'D

LEHI MAIN ST. PROFILE

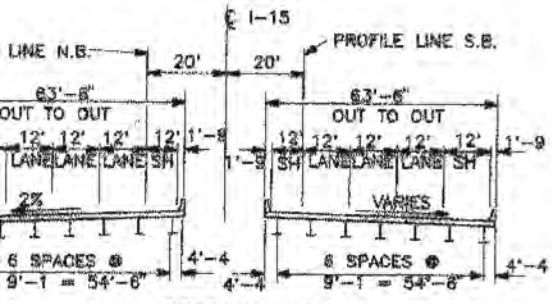


SECTION A-A

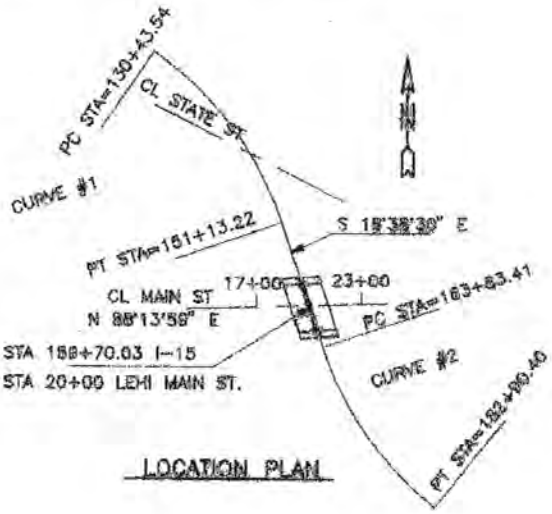


LOCATION PLAN

## GENERAL NOTES

1. MATERIALS, CONSTRUCTION AND WORKMANSHIP SHALL BE IN ACCORDANCE WITH THE UTAH DEPARTMENT OF TRANSPORTATION STANDARD SPECIFICATIONS FOR ROAD AND BRIDGE CONSTRUCTION, EDITION OF 1979, AND SUPPLEMENTS THERETO, WHICH ARE IN EFFECT AT THE DATE OF REQUEST FOR BIDS.
2. ALL REINFORCING STEEL SHALL BE DEFORMED BILLET-STEEL BARS CONFORMING TO ASTM DESIGNATION A615, GRADE 60.
3. ALL STRUCTURAL STEEL SHALL BE STRUCTURAL CARBON STEEL CONFORMING TO AASHTO DESIGNATION M-270 GRADE 50 EXCEPT WHERE NOTED OTHERWISE.
4. EXPOSED CONCRETE CORNERS SHALL BE CHAMFERED 3/4" EXCEPT WHERE NOTED OTHERWISE.
5. COVER TO REINFORCING STEEL SHALL BE 2" EXCEPT WHERE NOTED OTHERWISE.
6. ALL CAST-IN-PLACE CONCRETE SHALL BE CLASS AA(AE) EXCEPT WHERE SPECIFIED OTHERWISE.
7. ALL REINFORCING STEEL SHALL BE EPOXY COATED.

## DESIGN DATA

HS 20-44 OR INTERSTATE ALTERNATE LOADING IN ACCORDANCE WITH AASHTO SPECIFICATION OF 1988 AND INTERIM SPECIFICATIONS.
CAST-IN-PLACE CONCRETE: fc = 1,400 PSI, fs (REINF) = 24,000 PSI, N = 8
STRUCTURAL STEEL = fs = 27,000 PSI
WEARING SURFACE: 1/2" CONCRETE 35 LBS/SQ. FT. FUTURE WEARING SURFACE.
DESIGN SPEED: I-15 70 MPH, LEHI MAIN ST. 40 MPH

## INDEX OF SHEETS


. SITUATION AND LAYOUT
. SOIL DATA
. PILE LAYOUT AND FOUNDATION PLAN
. CONCRETE PILE DETAILS
. ABUTMENT DETAILS
. FRAMING PLAN
. GIRDER DETAILS
. STEEL DETAILS
. DIAPHRAGM AND SPLICE DETAILS
. DECK PLAN AND SECTIONS
. SCREED DETAILS
. PARAPET DETAILS
. APPROACH SLAB DRAIN DETAILS
. CONCRETE SLOPE PROTECTION
. REINFORCING STEEL SCHEDULE


## ORIGINAL PLAN SHEETS

R INFORMATION ONLY SHEETS
DM DRG. F-12 1,2,4,5,6,7,8,9 & 12

## QUANTITIES

| | ITEM | ESTIMATED | UNIT | AS CONST. |
|---|---|---|---|---|
| | REMOVAL OF BRIDGES | 1 | LUMP | |
| | CONCRETE CLASS AA (AE) EST. QUANT. 1,484 CU. YDS) | 1 | LUMP | |
| | REINFORCING STEEL (EPOXY COATED) | 286,451 | LBS | |
| 1 | STRUCTURAL STEEL (EST. QUANT. 1,685,034 LBS.) SPECIAL | 1 | LUMP | |
| | DRIVEN PILES | 3,063 | LIN. FT. | |
| | FURNISHING PILE DRIVING EQUIPMENT | 1 | LUMP | |
| | CONCRETE SLOPE PROTECTION | 1,428 | SQ. YDS | |
| | GRANULAR BACKFILL BORROW | 502 | CU. YDS | |

| | | | |
|---|---|---|---|
| 1 | MPP | 10/96 | CORRECTED STEEL QUANT. |
| NO | BY | DATE | REMARKS |

REVISIONS

UTAH DEPARTMENT OF TRANSPORTATION
SALT LAKE CITY, UTAH
STRUCTURES DIVISION
LEHI MAIN STREET INTERCHANGE
I-15 OVER LEHI MAIN ST.
SITUATION AND LAYOUT

158+70.03

IR-15-8(197)288

C-783

SHEET 1 OF 15

FILE: STRUCT1.DWG

C-783

PRESTRESSED BEAM REPAIR RE

PARAPET SEALING REQ'D.

APPROACH SLAB VOID FILL REQ'D. (TYP)

SEALING EXISTING CONCRETE SLOPE PROTECTION JOINTS REQ'D. (TYP)

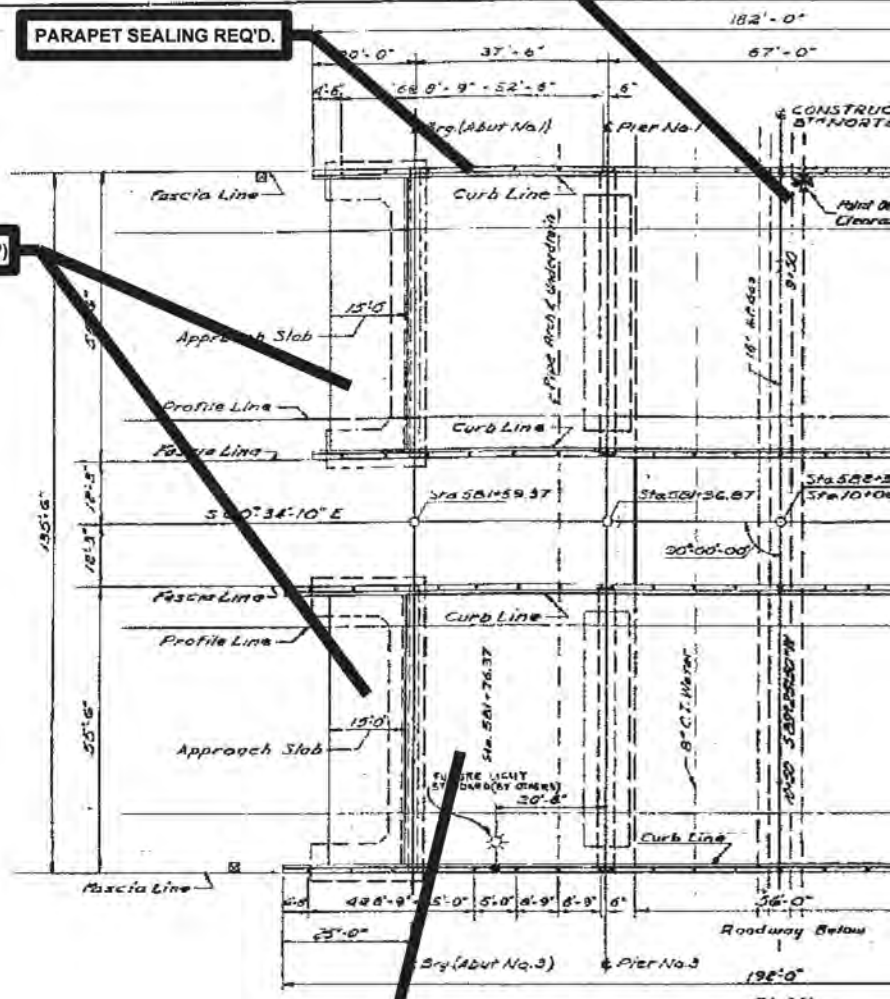


PLAN
SCALE: 1/16" = 1'-0"

PARAPET SEALING

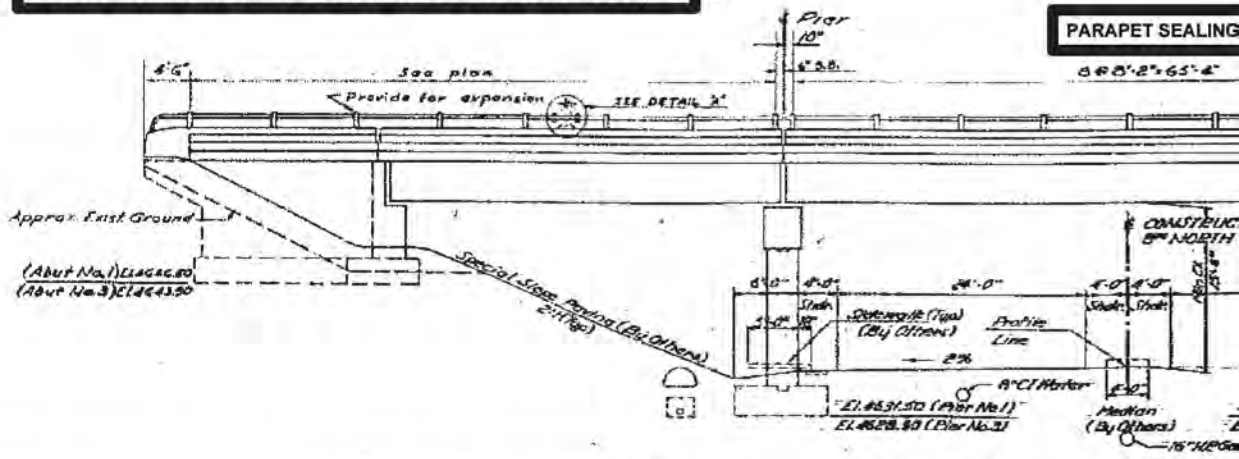


ELEVATION
SCALE: 1/16" = 1'-0"

**FOR INFORMATION ONLY**

**EXCEPT TO INDICATE LOCATION OF REQUIRED WORK**

DGN Files IP PWIndex1717\4433_F-13-rehabcom...

02-MAY-2005

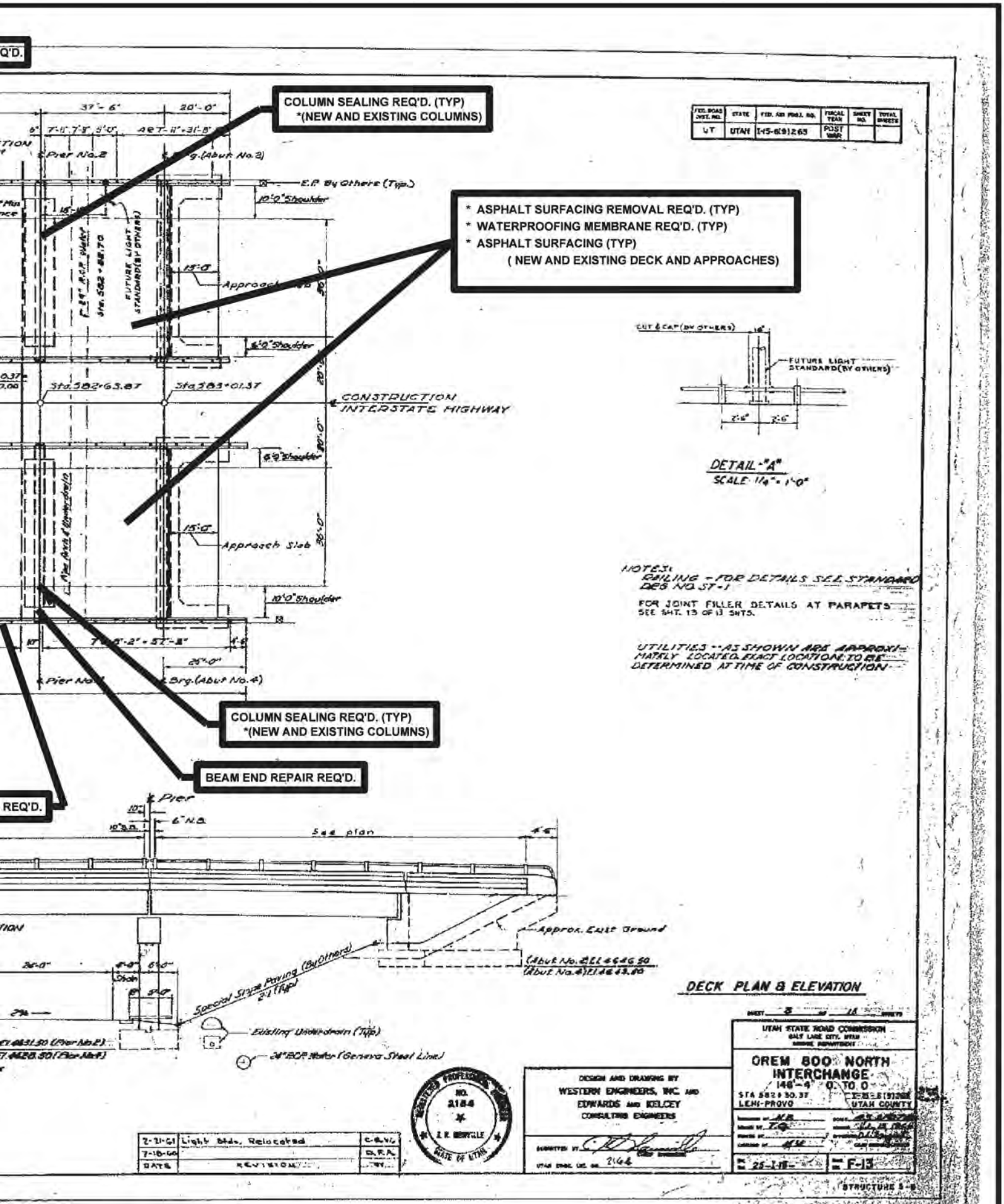
COLUMN SEALING REQ'D. (TYP)
*(NEW AND EXISTING COLUMNS)
* ASPHALT SURFACING REMOVAL REQ'D. (TYP)
* WATERPROOFING MEMBRANE REQ'D. (TYP)
* ASPHALT SURFACING (TYP)
( NEW AND EXISTING DECK AND APPROACHES)
COLUMN SEALING REQ'D. (TYP)
*(NEW AND EXISTING COLUMNS)
BEAM END REPAIR REQ'D.
REQ'D.
CONSTRUCTION INTERSTATE HIGHWAY
Approach Slab
10'-0" Shoulder
E.P. By Others (Typ.)
Pier No. 2
Abut No. 2
Pier No. 4
Brg. (Abut No. 4)
Sta. 582+63.87
Sta. 583+01.37
FUTURE LIGHT STANDARD (BY OTHERS)
CUT & CAP (BY OTHERS)
DETAIL "A"
SCALE 1 1/4" = 1'-0"
NOTES:
RAILING - FOR DETAILS SEE STANDARD DGN. NO. ST-1
FOR JOINT FILLER DETAILS AT PARAPETS SEE SHT. 13 OF 13 SHTS.
UTILITIES - AS SHOWN ARE APPROXIMATELY LOCATED. EXACT LOCATION TO BE DETERMINED AT TIME OF CONSTRUCTION
Pier
See plan
Approx. Exist Ground
Special Slope Paving (By Others) 2:1 (Typ)
Existing Underdrain (Typ)
24" RCP Water (General Steel Line)
DECK PLAN & ELEVATION
UTAH STATE ROAD COMMISSION
SALT LAKE CITY, UTAH
BRIDGE DEPARTMENT
OREM 800 NORTH INTERCHANGE
146'-4" O. TO O.
STA 582+30.37
LEHI-PROVO
UTAH COUNTY
DESIGN AND DRAWING BY
WESTERN ENGINEERS, INC. AND
EDWARDS AND KELCEY
CONSULTING ENGINEERS
REGISTERED PROFESSIONAL ENGINEER
NO. 2184
J. R. BERTOLLE
STATE OF UTAH
2-21-61 Light Stds. Relocated
7-18-60
DATE REVISION
25-1-18
F-13
STRUCTURE 5-B

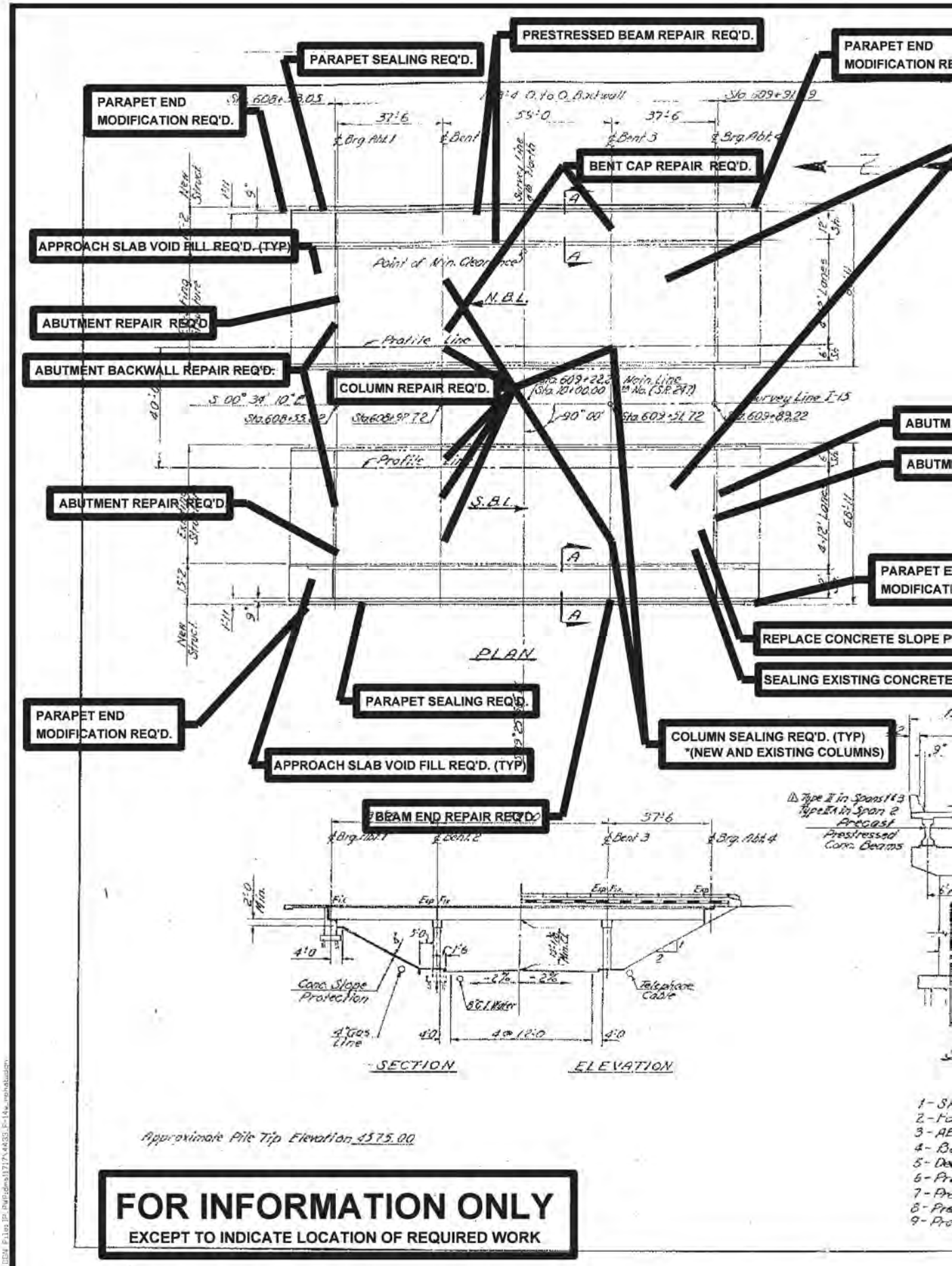
PRESTRESSED BEAM REPAIR REQ'D.
PARAPET SEALING REQ'D.
PARAPET END MODIFICATION REQ'D.
PARAPET END MODIFICATION REQ'D.
BENT CAP REPAIR REQ'D.
APPROACH SLAB VOID FILL REQ'D. (TYP)
ABUTMENT REPAIR REQ'D
ABUTMENT BACKWALL REPAIR REQ'D.
COLUMN REPAIR REQ'D.
ABUTMENT REPAIR REQ'D
PARAPET END MODIFICATION REQ'D.
PARAPET SEALING REQ'D.
APPROACH SLAB VOID FILL REQ'D. (TYP)
BEAM END REPAIR REQ'D.
COLUMN SEALING REQ'D. (TYP) *(NEW AND EXISTING COLUMNS)
REPLACE CONCRETE SLOPE P
SEALING EXISTING CONCRETE
PLAN
SECTION
ELEVATION
Approximate Pile Tip Elevation 4575.00
FOR INFORMATION ONLY
EXCEPT TO INDICATE LOCATION OF REQUIRED WORK

EQ'D.

* ASPHALT SURFACING REMOVAL REQ'D. (TYP)
* WATERPROOFING MEMBRANE REQ'D. (TYP)
* ASPHALT SURFACING (TYP)
( NEW AND EXISTING DECK AND APPROACHES)

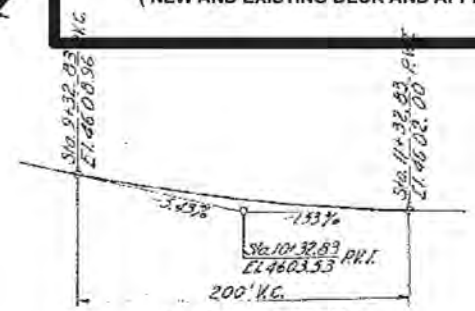


400 NORTH PROFILE

ENT BACKWALL REPAIR REQ'D.

ENT REPAIR REQ'D.

ND
ON REQ'D.

ROTECTION REQ'D.

S PROFILE

SLOPE PROTECTION JOINTS REQ'D. (TYP)

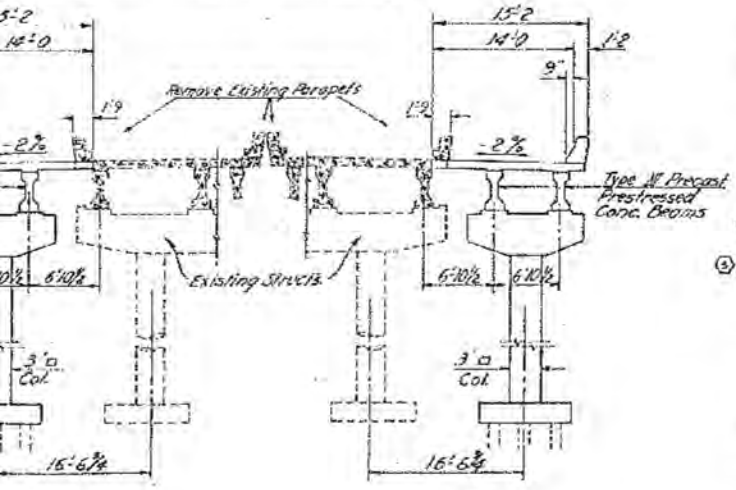


SECTION A-A

SECTION A-A

## GENERAL NOTES

1 - Materials, construction and workmanship shall be in accordance with the Utah Department of Highways Standard Specifications for Road and Bridge Construction, Interim Issue March 1968, and Supplements thereto which are in effect of the date of request for bids.
2 - All reinforcing steel shall be deformed billet-steel bars conforming to ASTM designation A 615-68, Grade 40.
3 - All structural steel shall be structural carbon steel conforming with A.A.S.H.O. designation M-183 (ASTM A-36) except where noted otherwise.
4 - Exposed concrete corners shall be chamfered ¾" except where noted otherwise.
5 - Cover to reinforcing steel shall be 2" except where noted otherwise.

## DESIGN DATA

HS 20-44 or Interstate Alternate Loading in accordance with A.A.S.H.O. Specifications of 1965 and Interim Specifications.

Cast-in-place Concrete: f'c = 3,000 p.s.i., fs (Reinf.) = 20,000 p.s.i.
f'c = 1,200 p.s.i., n = 10
Prestressed Concrete: f'c = 5,000 p.s.i., fs (Non-prestressed) = 20,000 p.s.i., n = 6
Structural Steel: fs = 20,000 p.s.i.
Wearing Surface: ② △ 2" Concrete. 15 lbs/sq. ft. future surface.

## QUANTITIES

| ITEM | ESTIMATED | UNIT | AS CONST. |
|---|---|---|---|
| Excavation for Structures | 93 | Cu. Yds | 205.20 |
| ② Class AA Concrete (AE) | 226 | Cu. Yds | 226.00 |
| Class A Concrete (AE) | 184 | Cu. Yds | 184.00 |
| ③ △ Reinforcing Steel | 59,162 | Lbs | 58,549.00 |
| Structural Steel | 1200 | Lbs | — |
| Metal Railing (Single Rail) | 679 | Lin. Ft. | 679.00 |
| Piles (other than timber) | 1753 | Lin. Ft. | 1,325.62 |
| Concrete Slope Protection | 1520 | Sq. Yds | 1,637.80 |
| Select Granular Backfill | 40 | Cu. Yds | 33.50 |
| Prestressed Conc. Member Type II (38'-11 Long) | 6 | Each | 6.00 |
| Prestressed Conc. Member Type IIA (38'-10 Long) | 2 | Each | 2.00 |
| Prestressed Conc. Member Type III (38'-10 Long) | 2 | Each | 2.00 |
| Prestressed Conc. Member Type III (38'-1 Long) | 2 | Each | 2.00 |
| Elastomeric Brg. Pad 1" Thick | 24 | Sq. Ft. | 20.22 |
| Remove Existing Structures for Widening | 1 | Lump | 1.00 |

## INDEX OF SHEETS


tuation & Layout
undation Plan
utment Details N.B.L. & S.B.L.
nt Details N.B.L. & S.B.L.
k Plan & Sections - Frame Plan
estressed Beam Details B-1
estressed Beam Details B-2
estressed Beam Details B-3
estressed Beam Details B-4
10 - Parapet Details
11 - Railing Details
12 - Concrete Slope Protection
13 - Concrete Pile Details
14 - Reinforcing Steel Schedule


| NO. | BY | DATE | REMARKS |
|---|---|---|---|
| ⓪ | R.M.C. | 2-13-70 | Rebar Quantities |
| △ | W.M.B. | 12-29-69 | Changes in Rebar quantities |
| ② | R.M.C. | 9-12-69 | Design Data - Quantities |
| △ | H.L.A. | 9-8-69 | Design Data - Beam Type |

REVISIONS

UTAH STATE DEPARTMENT OF HIGHWAYS
SALT LAKE CITY, UTAH
STRUCTURES DIVISION

NORTH LEHI - SOUTH PROVO
U-4 (I-15) OVER 400 No. ST. IN OREM (WIDENING)
SITUATION & LAYOUT

DESIGN N.O.D. 2-68 CHECK M.W. 7-15-69 I-15-6 (66) 267
DRAWN H.L.A. 4-3-69 CHECK T.J.T. 6-16-69 PROJECT NUMBER
BUILT H.L.A. 7-7-69 CHECK W.M.B. 7-7-69 609+22.22
APPROVAL RECOMM. 7-29-69 DATE — Director of Highways
APPROVED 7-30-69 DATE — Chief Engineer, Director of Highways
UTAH COUNTY

B.R. NO. — DWG. NO. F-14 W — 1 of 14

Final: Item 8, April 1970.

F-14

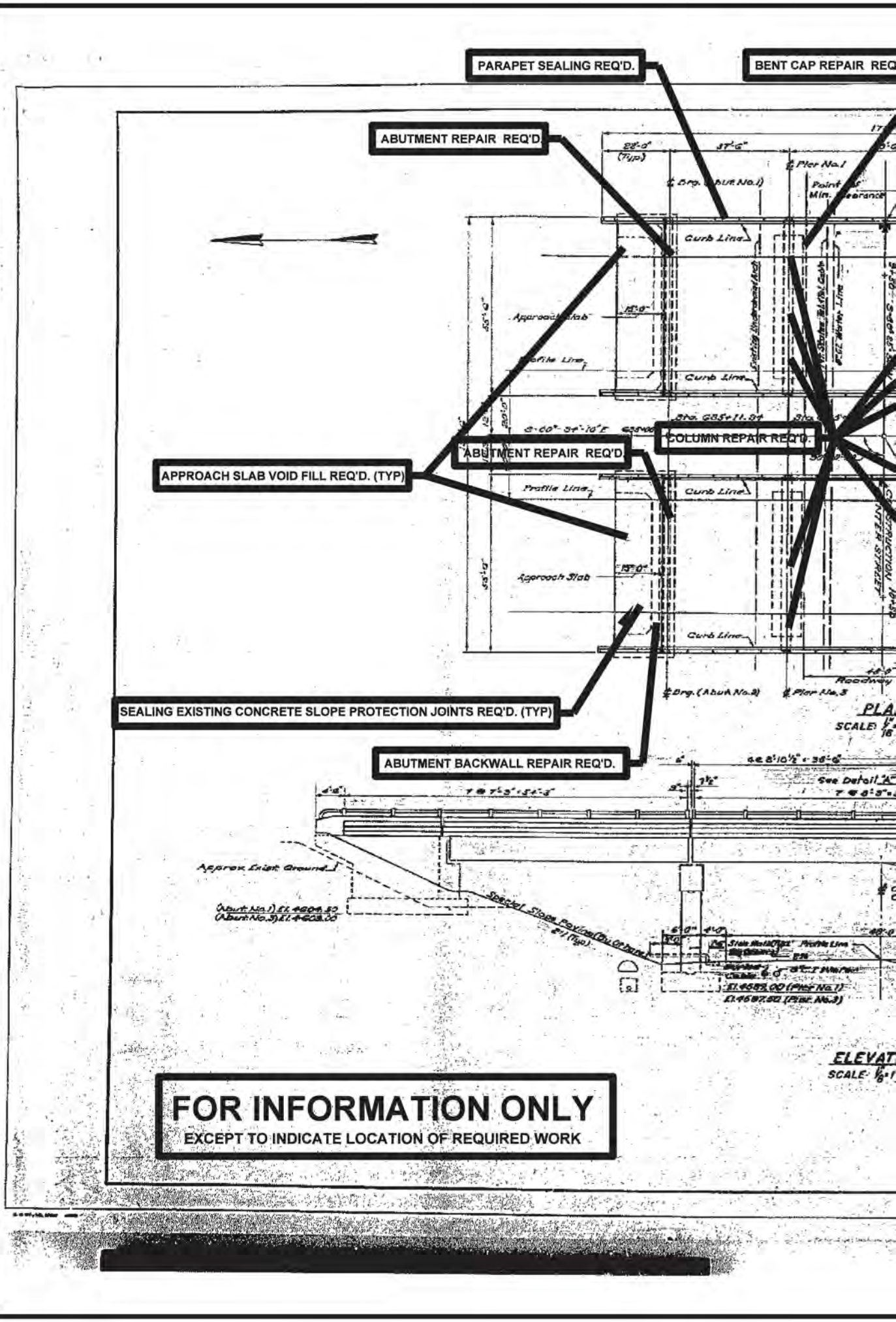
PARAPET SEALING REQ'D.
BENT CAP REPAIR REQ
ABUTMENT REPAIR REQ'D.
COLUMN REPAIR REQ'D.
ABUTMENT REPAIR REQ'D.
APPROACH SLAB VOID FILL REQ'D. (TYP)
SEALING EXISTING CONCRETE SLOPE PROTECTION JOINTS REQ'D. (TYP)
ABUTMENT BACKWALL REPAIR REQ'D.
Curb Line
Approach Slab
Profile Line
Roadway
Approx. Exist. Ground
FOR INFORMATION ONLY
EXCEPT TO INDICATE LOCATION OF REQUIRED WORK

[redacted]

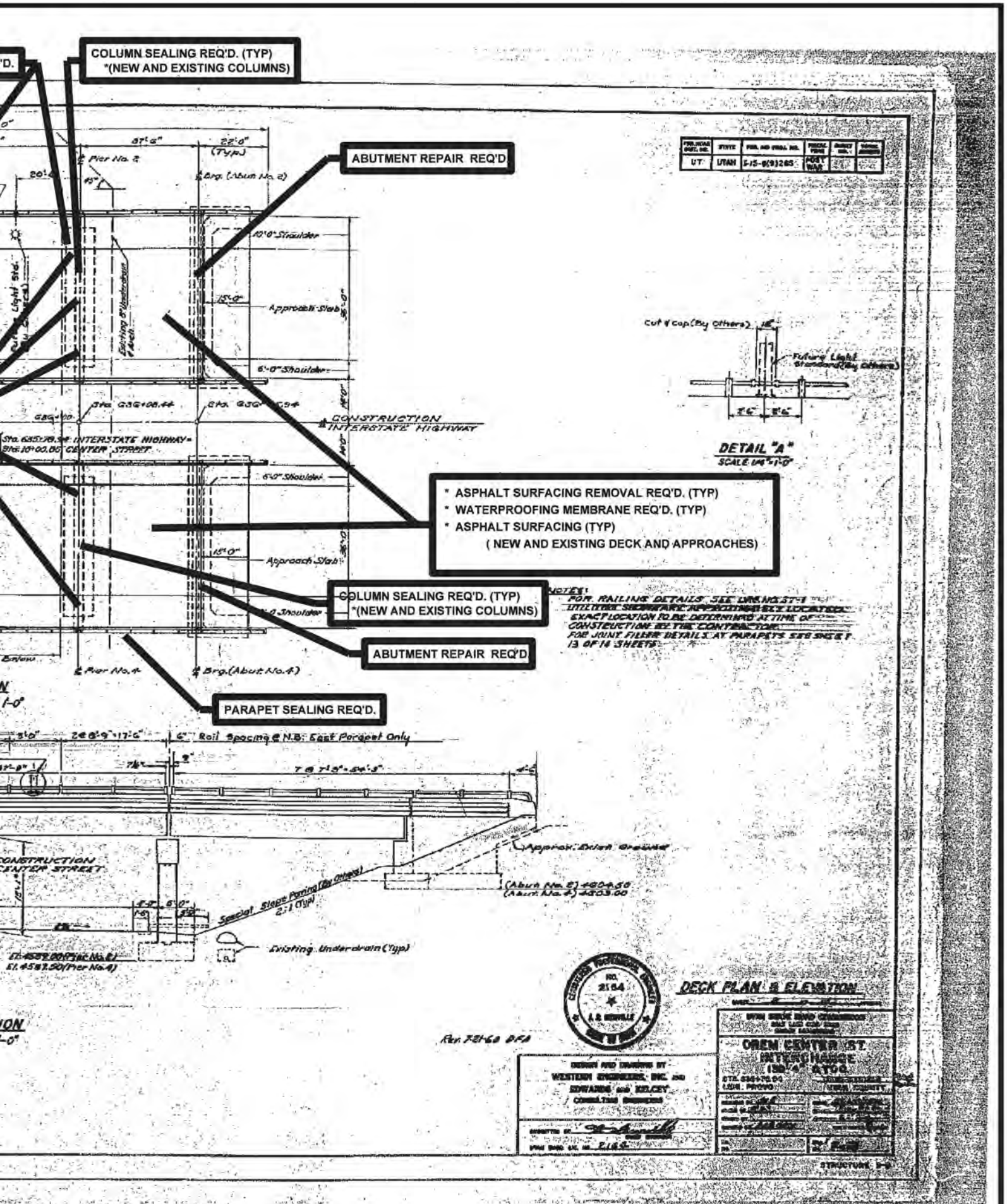
COLUMN SEALING REQ'D. (TYP)
*(NEW AND EXISTING COLUMNS)
ABUTMENT REPAIR REQ'D
* ASPHALT SURFACING REMOVAL REQ'D. (TYP)
* WATERPROOFING MEMBRANE REQ'D. (TYP)
* ASPHALT SURFACING (TYP)
( NEW AND EXISTING DECK AND APPROACHES)
COLUMN SEALING REQ'D. (TYP)
*(NEW AND EXISTING COLUMNS)
ABUTMENT REPAIR REQ'D
PARAPET SEALING REQ'D.
DETAIL "A"
DECK PLAN & ELEVATION
OREM CENTER ST. INTERCHANGE
CONSTRUCTION INTERSTATE HIGHWAY
Approach Slab
Pier No. 2
Pier No. 4
Brg. (Abut No. 2)
Brg. (Abut No. 4)
Existing Underdrain (Typ)
Special Slope Paving (By Others) 2:1 (Typ)
Approx. Drain Opening
Rail Spacing @ N.B. East Parapet Only
Cut & Cap (By Others)
Future Light Standard (By Others)
NOTES:
FOR RAILING DETAILS SEE DRAWING ST-1
LITTLE TREE SIDEWALK APPROXIMATE LOCATION
EXACT LOCATION TO BE DETERMINED AT TIME OF CONSTRUCTION BY THE CONTRACTOR
FOR JOINT FILLER DETAILS AT PARAPETS SEE SHEET 13 OF 14 SHEETS
WESTERN ENGINEERS, INC. AND EDWARDS AND KELCEY
CONSULTING ENGINEERS
STRUCTURE S-9

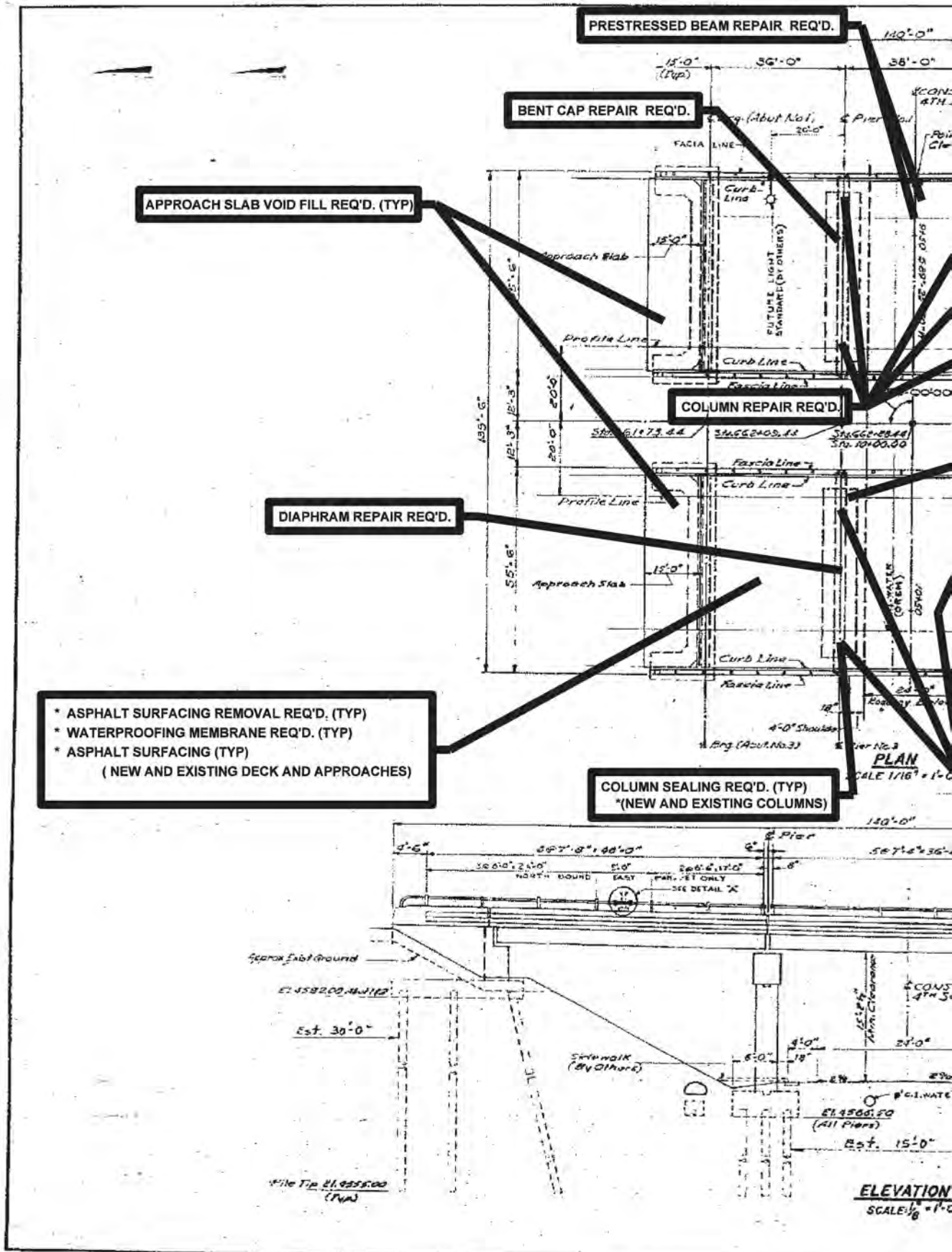


02-MAY-2005 DGN Files IP PWPidns\1717\4433_F-16_rehab.dgn

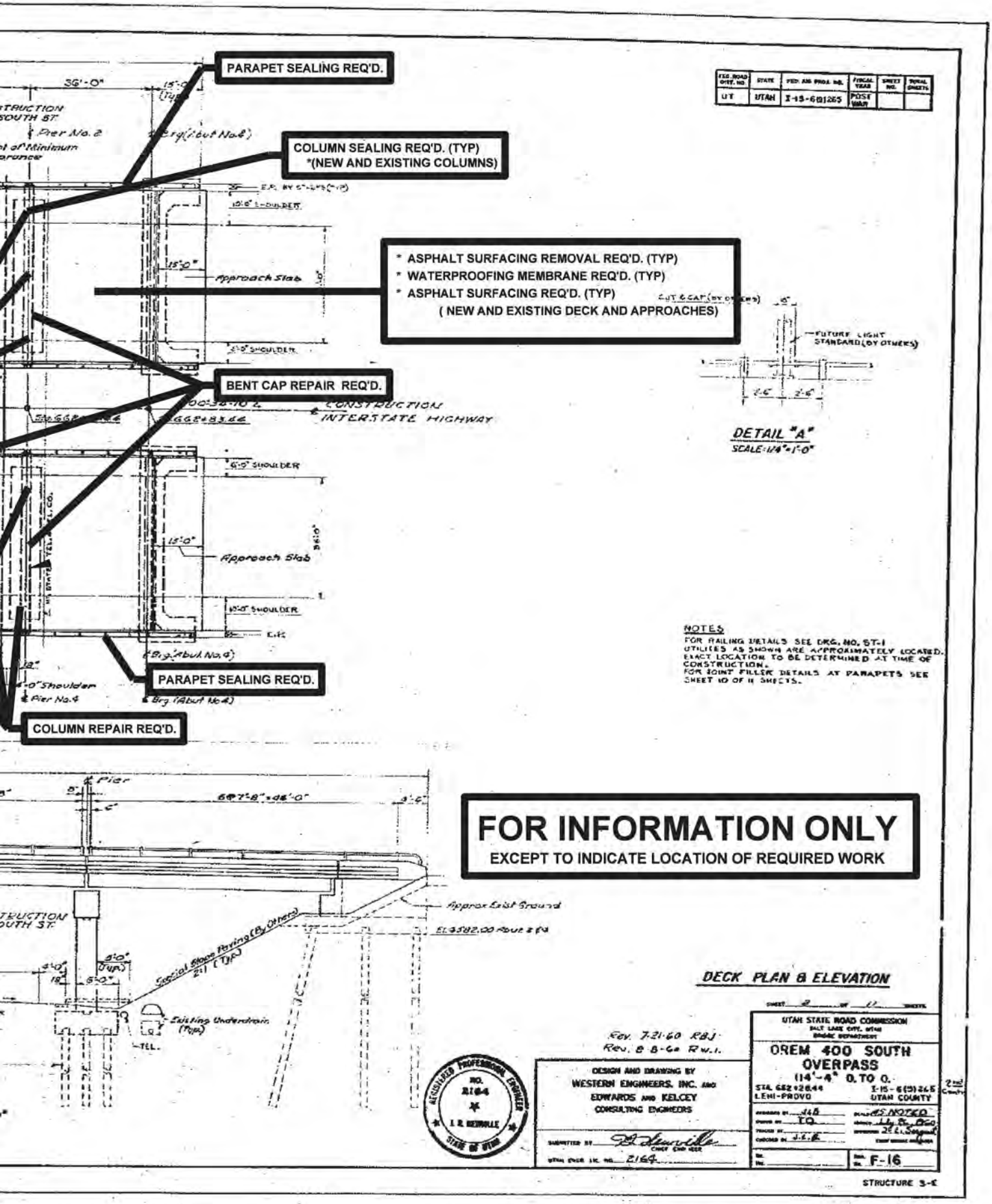
PARAPET SEALING REQ'D.
COLUMN SEALING REQ'D. (TYP)
*(NEW AND EXISTING COLUMNS)
* ASPHALT SURFACING REMOVAL REQ'D. (TYP)
* WATERPROOFING MEMBRANE REQ'D. (TYP)
* ASPHALT SURFACING REQ'D. (TYP)
( NEW AND EXISTING DECK AND APPROACHES)
BENT CAP REPAIR REQ'D.
PARAPET SEALING REQ'D.
COLUMN REPAIR REQ'D.
Approach Slab
CONSTRUCTION
INTERSTATE HIGHWAY
DETAIL "A"
SCALE: 1/4"=1'-0"
NOTES
FOR RAILING DETAILS SEE DRG. NO. ST-1
UTILITIES AS SHOWN ARE APPROXIMATELY LOCATED. EXACT LOCATION TO BE DETERMINED AT TIME OF CONSTRUCTION.
FOR JOINT FILLER DETAILS AT PARAPETS SEE SHEET 10 OF 11 SHEETS.
FOR INFORMATION ONLY
EXCEPT TO INDICATE LOCATION OF REQUIRED WORK
DECK PLAN & ELEVATION
UTAH STATE ROAD COMMISSION
OREM 400 SOUTH OVERPASS
(14'-4" O. TO O.)
STA. 652+26.44
I-15-6(51)265
LEHI-PROVO
UTAH COUNTY
DESIGN AND DRAWING BY
WESTERN ENGINEERS, INC. AND
EDWARDS AND KELCEY
CONSULTING ENGINEERS
F-16
STRUCTURE 3-E

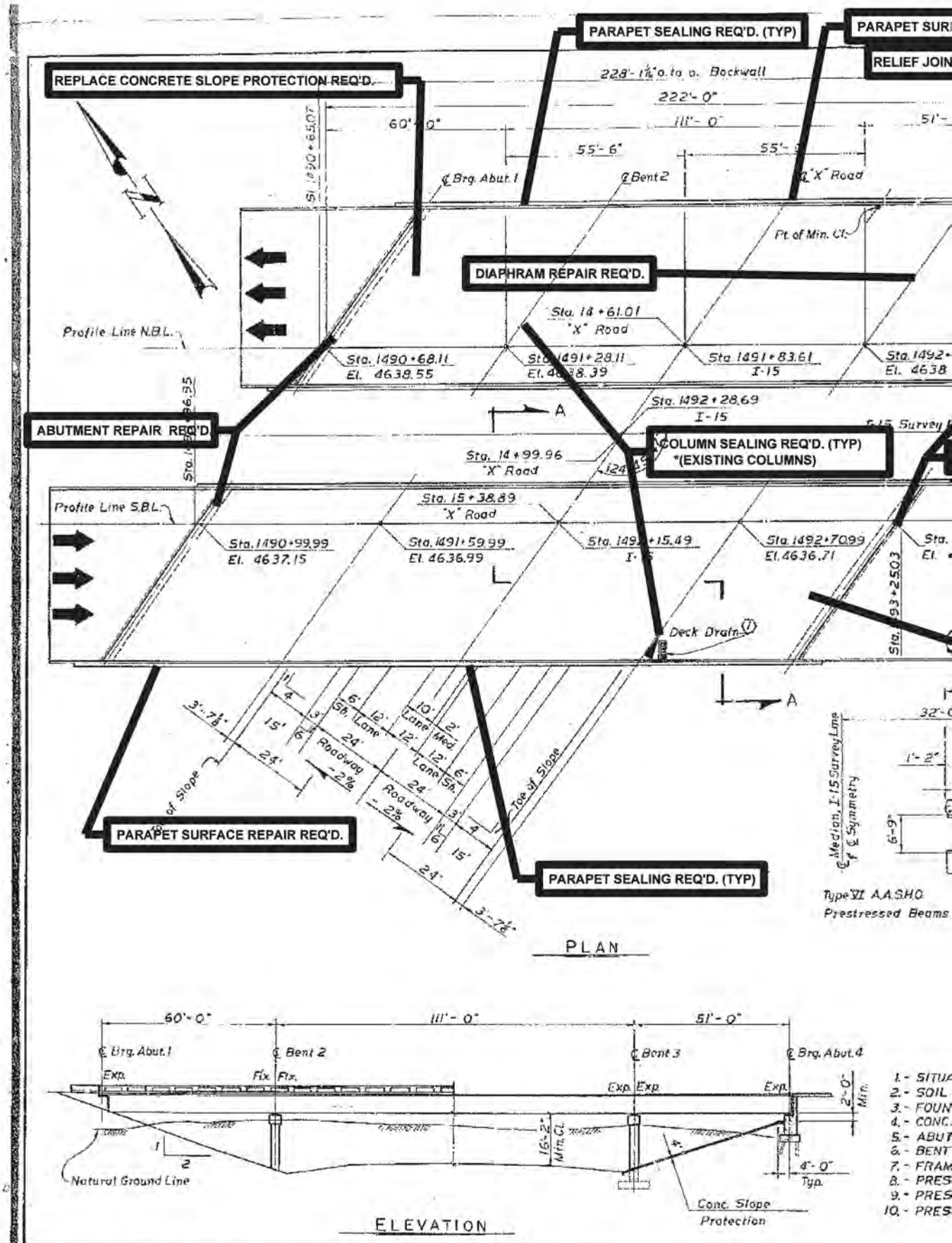


**FOR INFORMATION ONLY**

**EXCEPT TO INDICATE LOCATION OF REQUIRED WORK**

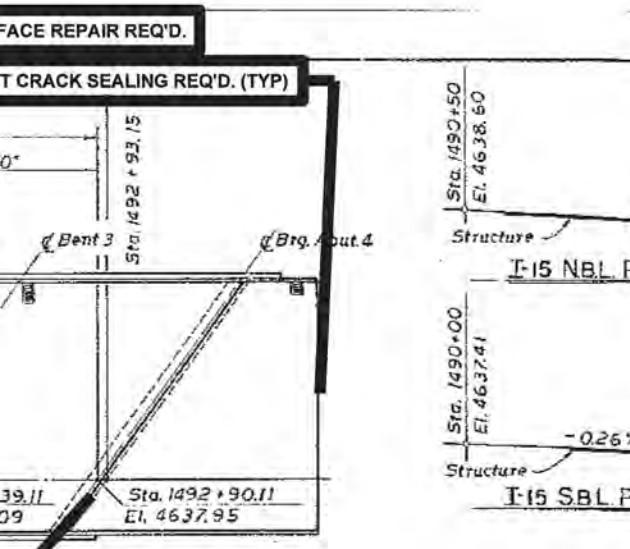


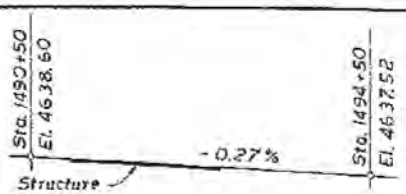


I-15 NBL PROFILE

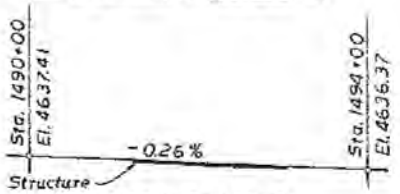


I-15 SBL PROFILE

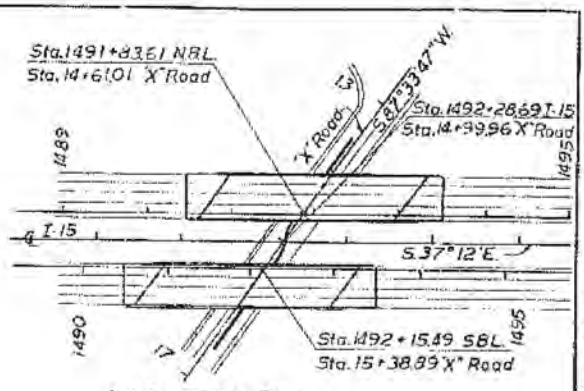


LOCATION PLAN

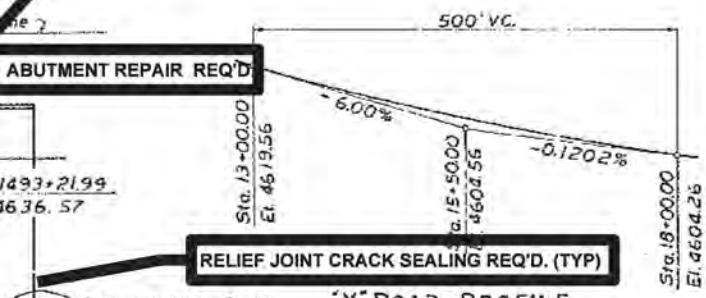


"X" ROAD PROFILE

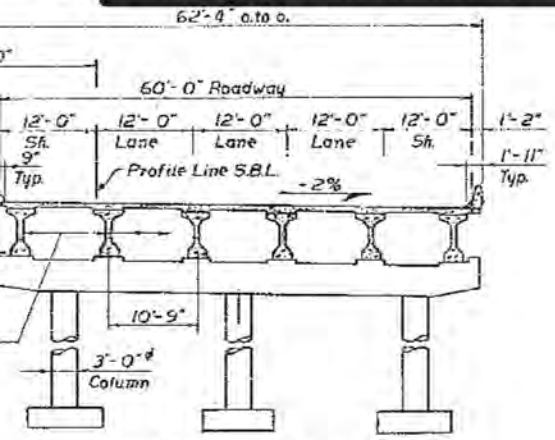


SECTION A-A

## INDEX OF SHEETS


TION & LAYOUT
DATA
DATION PLAN
RETE PILE DETAILS
MENT DETAILS
DETAILS
ING PLAN
TRESSED BEAM DETAILS B1
TRESSED BEAM DETAILS B2
TRESSED BEAM DETAILS B3
11.- DECK PLAN & SECTIONS
12.- OPTIONAL DECK JOINT DETAILS
13.- OPTIONAL DECK JOINT DETAILS
14.- PARAPET DETAILS
15.- LIGHTING DETAILS FOR STRUCTURES
16.- CONCRETE SLOPE PROTECTION
17.- REINFORCING STEEL SCHEDULE
18.- REINFORCING STEEL SCHEDULE
18A- APPROACH SLAB DRAIN DETAILS


## GENERAL NOTES

1.- Materials, construction and workmanship shall be in accordance with the Utah Department of Highways Standard Specifications for Road and Bridge Construction, Edition of 1970, and Supplements thereto which are in effect at the date of request for bids.

2.- All reinforcing steel shall be deformed billet-steel bars conforming to ASTM designation A 615-68, Grade 40.

3.- All structural steel shall be structural carbon steel conforming to AASHO designation M-183 (ASTM A-36) except where noted otherwise.

4.- Exposed concrete corners shall be chamfered ¾" except where noted otherwise.

5.- Cover to reinforcing steel shall be 2" except where noted otherwise.

## DESIGN DATA

HS 20-44 or Interstate Alternate Loading in accordance with AASHO Specifications of 1969 and Interim Specifications.

Cast-in-place Concrete: $f'_c$ = 3,000 psi, $f_s$ (Reinf.) = 20,000 psi.
$f_c$ = 1,200 psi; n = 10

Prestressed Concrete: $f'_c$ = 5,000 psi; $f_s$ (Nonprestressed) = 20,000 psi, n = 6

Structural Steel: $f_s$ = 20,000 psi.

Design Speed: I-15 = 70 M.P.H. "X" Road = 40 M.P.H.

## QUANTITIES

| ITEM | ESTIMATED | UNIT | AS CONST. |
|---|---|---|---|
| Excavation for Structures | 1282 | Cu. Yd. | 1,076.90 |
| Class A Concrete (AE) | 903 | Cu. Yd. | 903.00 |
| Class AA Concrete (AE) | 1,197 | Cu. Yd. | 1,197.00 |
| Reinforcing Steel | 375,715 | L.b. | 375,881.00 |
| (1) Structural Steel | 1360 | L.b. | — |
| Concrete Slope Protection | 3,050 | Sq. Yd. | 3,145.34 |
| Granular Backfill Borrow | 261 | Cu. Yd. | 277.24 |
| Prestr. Conc. Member Type VI (60'-3½" lg) | 12 | Each | 12.00 |
| Prestr. Conc. Member Type VI (110'-3" lg) | 12 | Each | 12.00 |
| Prestr. Conc. Member Type VI (51'-3½ lg) | 12 | Each | 12.00 |
| Elastomeric Bearing Pad (1/2" thick) | 188 | Sq. Ft. | 187.50 |
| Expansion Joints | 1 | Lump | 1.00 |
| Electrical Work, Bridges | 1 | Lump | 1.00 |
| Pile (other than timber) | 1,434 | Lin. Ft. | 1,107.86 |
| Furnishing Pile Driving Equipment | 1 | Lump | 1.00 |
| Waterproofing Membrane | 4,057 | Sq. Yds. | 3,784.20 |
| Add. Class A Concrete AE | — | Cu. Yd. | 1.26 |

| NO. | BY | DATE | REMARKS |
|---|---|---|---|
| (1) | RDH | 4-17-72 | Quantities, Drain Location, & Sheets |

REVISIONS

UTAH STATE DEPARTMENT OF HIGHWAYS
SALT LAKE CITY, UTAH
STRUCTURES DIVISION

LEHI NORTHERLY
I-15 over "X" Road
SITUATION & LAYOUT

DESIGN AOB 7-71 CHECK MW 2-72 PROJECT I-156(4) 281 20 201 JUNCTION
DRAWN MJS 1-21-71 CHECK G.H.M. 6/8/71
QUANTITY R.L.M.G. 8-31-70 CHECK H.E.M. 8-31-71 STATION 1492+30
APPROVAL RECOMM. 8-31-71 DATE O. O. Blomfield DIVISION ENGINEER
APPROVAL 2-22-72 DATE Ray L. Mitchell CHIEF ENGINEER UTAH COUNTY
DR. NO. DRG. NO. F 312 1 OF 18

Final: Ham St. 3-26-75

F-312

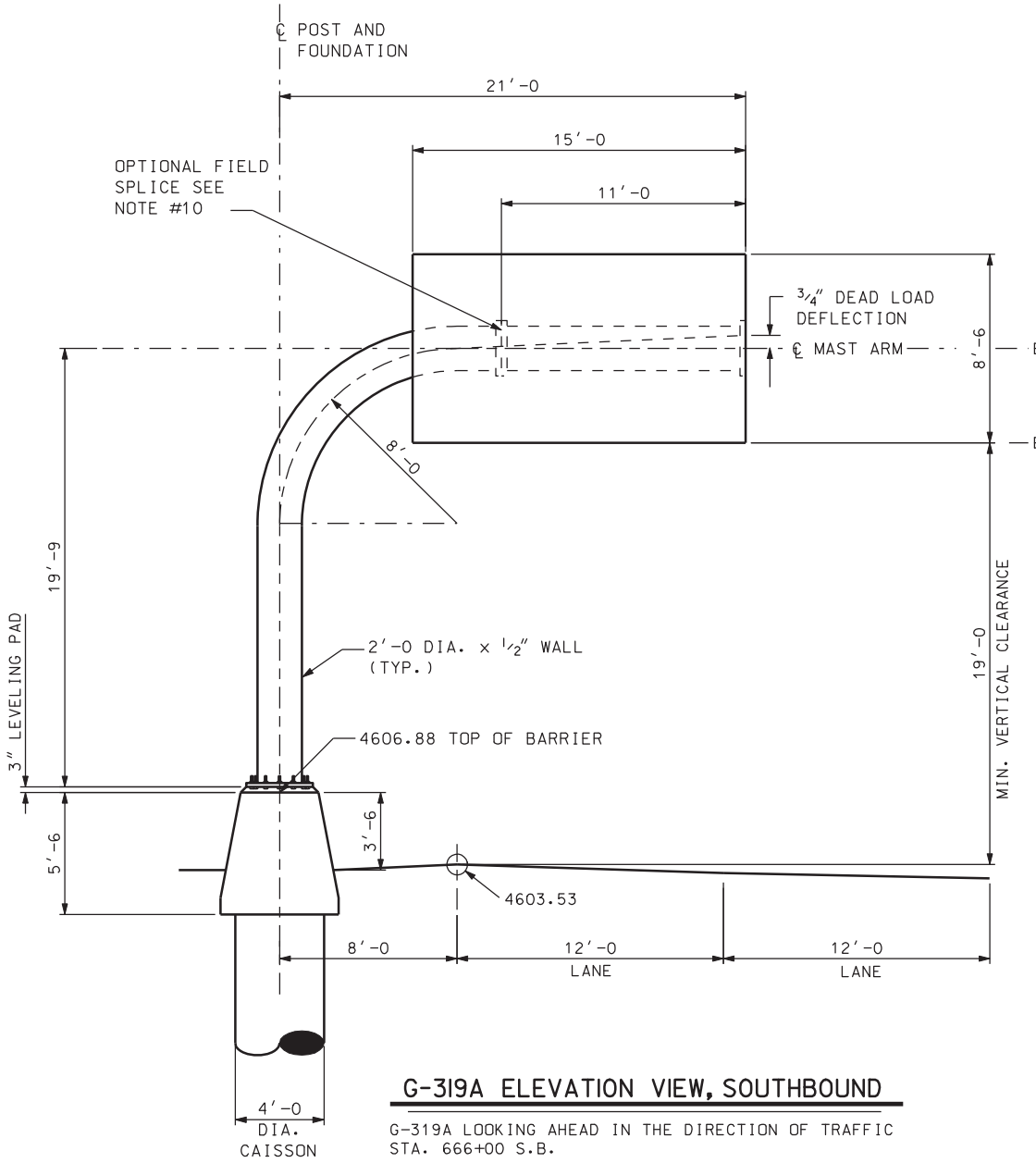


## G-319A ELEVATION VIEW, SOUTHBOUND

G-319A LOOKING AHEAD IN THE DIRECTION OF TRAFFIC
STA. 666+00 S.B.

## INDEX OF SHEETS


1. SIGN G-319A, STA. 666+00 S.B.
2. SIGN G-319B, STA. 772+60 N.B.
3. SIGN G-319C, SIGN G-319D
4. MODIFIED DRILLED SHAFT FOUNDATI
5. DRILLED SHAFT FOUNDATION DETAIL
6. SIGN BRACING DETAILS
7. SIGN SUPPORT DETAILS

## NOTES:

1. USE STRUCTURAL TUBING LOW CARBON STEEL CONFORMING TO ASTM A 53 GRADE B. EXCEPT ITS CHEMICAL COMPOSITION REQUIREMENTS WILL BE: CARBON ≤ 0.25%, PHOSPHORUS ≤ 0.04%, MANGANESE ≤ 1.35% AND SILICON ≤0.05% (THE OTHER ELEMENTS ARE TO CONFORM TO ASTM A 53 GRADE B). CONTRACTOR IS TO SUBMIT MILL CERTIFICATES FOR ABOVE REQUIREMENTS ALONG WITH THE FABRICATION SHOP DRAWINGS (NOTE NO. 6).

2. ALL OTHER SHAPES AND PLATES ARE TO CONFORM TO AASHTO M 270 GRADE 36 (ASTM A 709 GRADE 36).

3. ALL STRUCTURAL STEEL WILL BE HOT DIP GALVANIZED AFTER FABRICATION IN ACCORDANCE WITH AASHTO M 111 (ASTM A 123). STRUCTURAL STEEL MAY BE METALIZED USING ELECTRIC ARC SPRAYED ZINC WIRE AS AN ALTERNATIVE TO HOT DIP GALVANIZING. SEE THE SPECIAL PROVISION FOR METALIZING REQUIREMENTS.

4. FURNISH ANCHOR BOLTS CONFORMING TO ASTM F-1554 GRADE 55 WITH A HOOK AS SHOWN. ANCHOR BOLTS ARE NOT TO BE WELDED TO REINFORCING STEEL. THE NUTS AND WASHERS ACCOMPANYING THE ANCHOR BOLTS ARE TO CONFORM TO ASTM A 563 AND F 436 SPECIFICATIONS RESPECTIVELY. GALVANIZE NUTS, WASHERS AND THE ANCHOR BOLTS IN ACCORDANCE WITH AASHTO M 232 (ASTM A 153). ALL GALVANIZED STEEL THREADS ARE TO BE FREE FROM DEFECTS ALLOWING NUTS TO BE FREE RUNNING BY HAND FOR THE ENTIRE LENGTH OF THREADS.

5. PROVIDE SHOP DRAWINGS IN ACCORDANCE WITH CURRENT UDOT STANDARD SPECIFICATIONS.

6. WELDING DESIGN AND FABRICATION WILL BE IN ACCORDANCE WITH ANSI/ AASHTO/AWS D1.5, AND D1.1 SPECIFICATIONS.

7. DURING SIGN ERECTION THE POST WILL BE RACKED AS NECESSARY WITH THE USE OF LEVELING NUTS TO MAKE THE SIGN PANELS LEVEL. AT FINAL POSITION BOTH TOP AND BOTTOM ANCHOR BOLT NUTS ARE TO BE WRENCH TIGHTENED.

8. USE CLASS AA (AE) CONCRETE FOR FOUNDATIONS.

9. ALL REINFORCING STEEL WILL BE COATED DEFORMED BILLET-STEEL BARS CONFORMING TO AASHTO M 284 AND M31 (GRADE 60) RESPECTIVELY.

10. MANUFACTURER CAN ADJUST LOCATION OF FIELD SPLICE. THE FIELD SPLICE MUST NOT INTERFERE WITH SIGN ATTACHMENT BRACKETS.

EL. 4626.88

EL. 4622.63

## DESIGN DATA

LOADS IN ACCORDANCE WITH CURRENT AASHTO STANDARD SPECIFICATIONS FOR STRUCTURAL SUPPORTS, FOR HIGHWAY SIGNS, LUMINAIRES, AND TRAFFIC SIGNALS, 2001 EDITION WITH INTERIMS THROUGH 2003.

CAST-IN-PLACE CONCRETE: $f'_c$ = 4000 PSI;
CLASS AA (AE) $f_y$ (REINF.) = 60,000 PSI
$n$ = 8

STRUCTURAL STEEL: ASTM A 53 $f_y$ = 35,000 PSI
AASHTO M 270 $f_y$ = 36,000 PSI

## QUANTITIES

| ITEM | ESTIM. | UNIT | AS CONST. |
|---|---|---|---|
| 48 INCH MODIFIED DRILLED SHAFT FOUNDATION | 2 | EACH | |
| 48 INCH DRILLED SHAFT FOUNDATION | 2 | EACH | |
| 24 INCH CANTILEVER SIGN STRUCTURE G-319 | 2 | EACH | |
| RELOCATE SIGN STRUCTURE G-308 | 2 | EACH | |

ION DETAILS
LS

REVISIONS

| NO. | DATE | BY | REMARKS |
|---|---|---|---|

UTAH DEPARTMENT OF TRANSPORTATION
SALT LAKE CITY, UTAH
STRUCTURES DIVISION

DESIGN RH 12/04 CHECK HCB 12/04
DRAWN VHB 12/04 CHECK RH 12/04
QUANT. RH 01/05 CHECK HCB 01/05

APPROVAL RECOMM. DATE SENIOR DESIGN ENGR.
APPROVED FOR USE BY UDOT DATE UDOT BRIDGE ENGR.

I-15; CORRIDOR IN UTAH COUNTY
CANTILEVER SIGNS
SIGN G-319A, STA. 666+00 S.B.
PROJECT NUMBER SP-15-6(52)241

UTAH
COUNTY
G-319
DRG. NO.
SHT. 1 OF 7

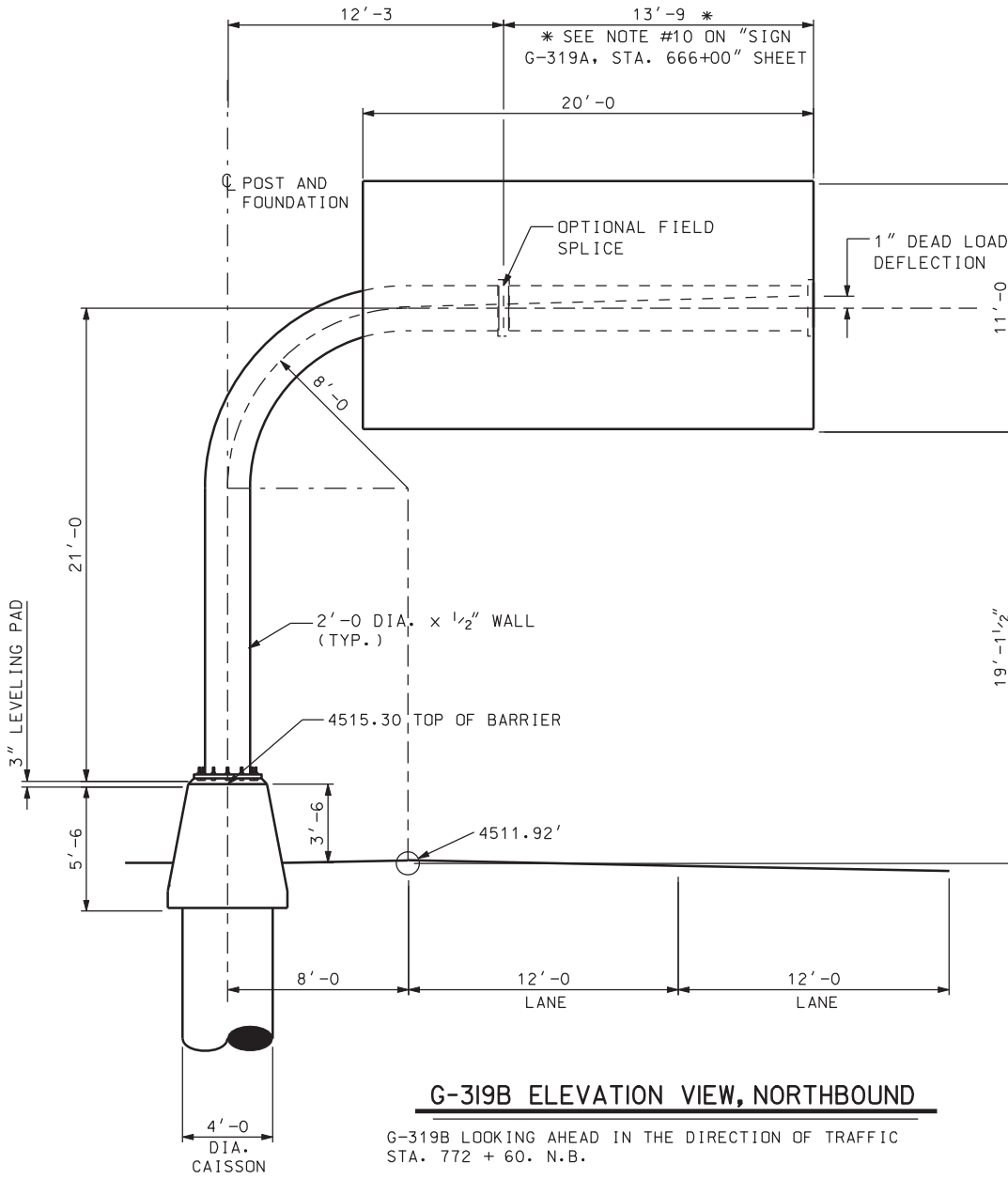


## G-319B ELEVATION VIEW, NORTHBOUND

G-319B LOOKING AHEAD IN THE DIRECTION OF TRAFFIC
STA. 772 + 60. N.B.

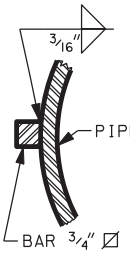


## DETAIL "B"

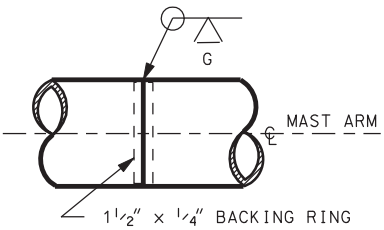


## SHOP SPLICE

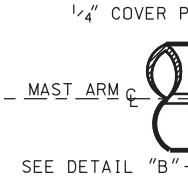


## MAST

DGN File: N:\Projects\4433.04\Sheet.Files\Structures\sign\4433.g-319-02.sign-b.dgn
05-MAY-2005

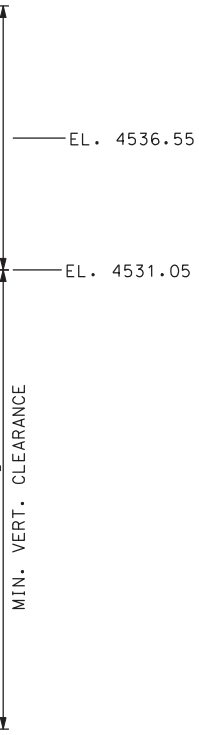


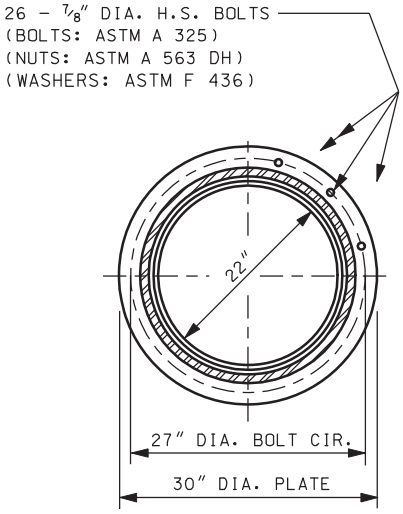


SECTION A-A

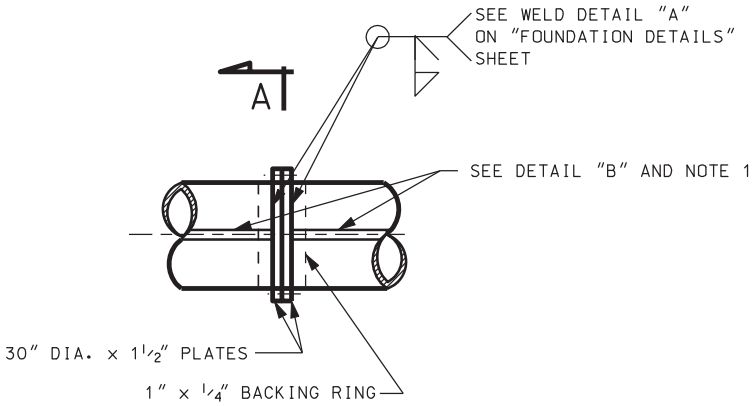


FIELD SPLICE

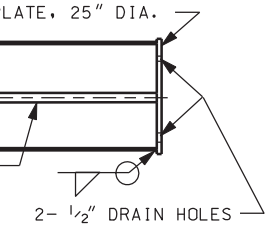


ARM END DETAIL

NOTES:

1. DETAIL B REQUIRED ON ALL HORIZONTAL SECTIONS OF MAST ARM.

| NO. | DATE | BY | REMARKS |
|---|---|---|---|

REVISIONS

UTAH DEPARTMENT OF TRANSPORTATION
SALT LAKE CITY, UTAH
STRUCTURES DIVISION

DESIGN RH 12/04 CHECK HCB 12/04
DRAWN VHB 12/04 CHECK RH 12/04
QUANT. RH 01/05 CHECK HCB 01/05

APPROVAL RECOMM. DATE SENIOR DESIGN ENGR.
APPROVED FOR USE BY UDOT DATE UDOT BRIDGE ENGR.

I-15: CORRIDOR IN UTAH COUNTY
CANTILEVER SIGNS
SIGN G-319B, STA. 772+60 N.B.

PROJECT NUMBER SP-15-6(52)241

UTAH
COUNTY

G-319
DRG. NO.

SHT. 2 OF 7

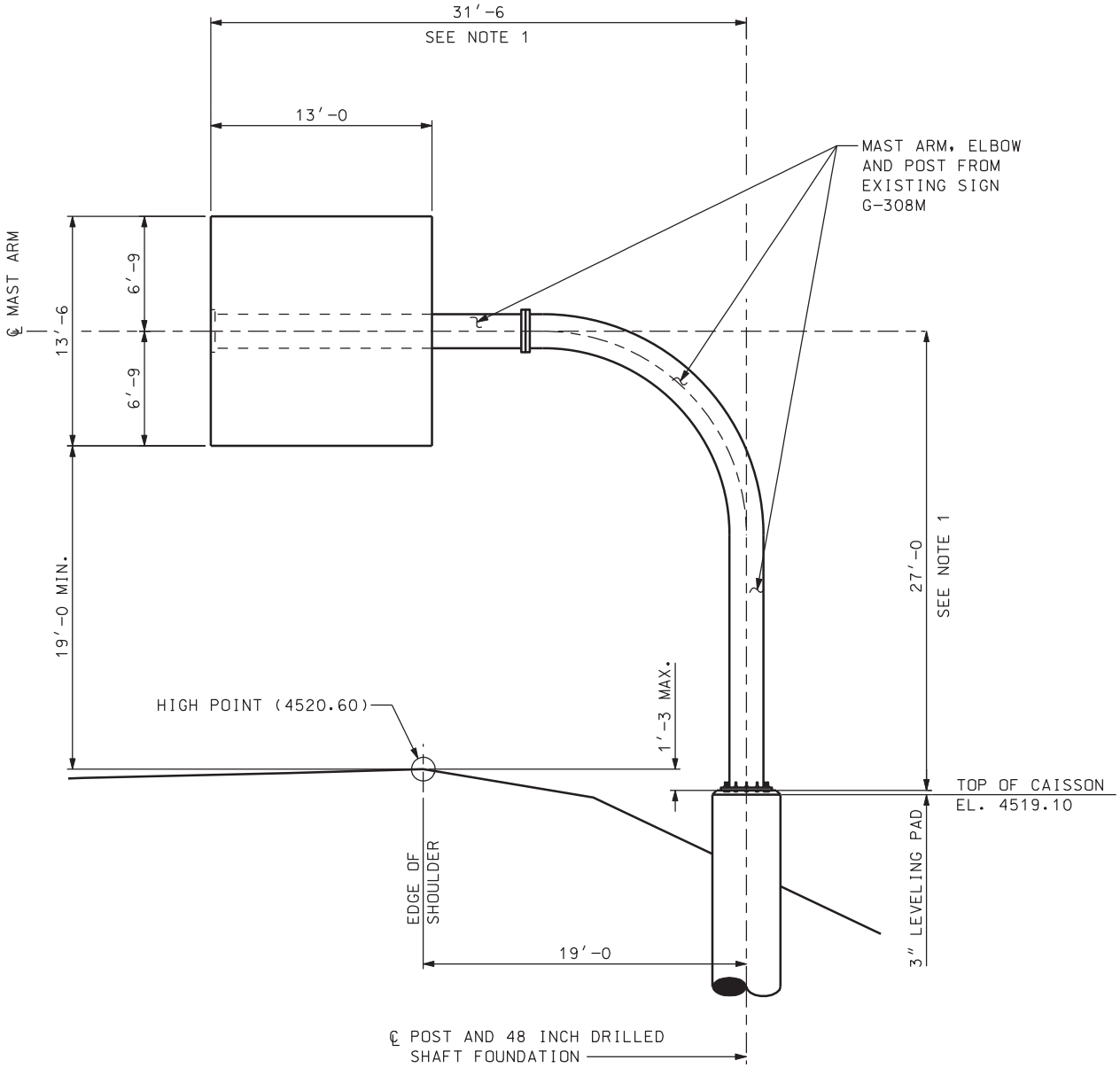


## G-319C ELEVATION VIEW, SOUTHBOUND

G-319C LOOKING AHEAD IN THE DIRECTION OF TRAFFIC
STA. 759+00 S.B.

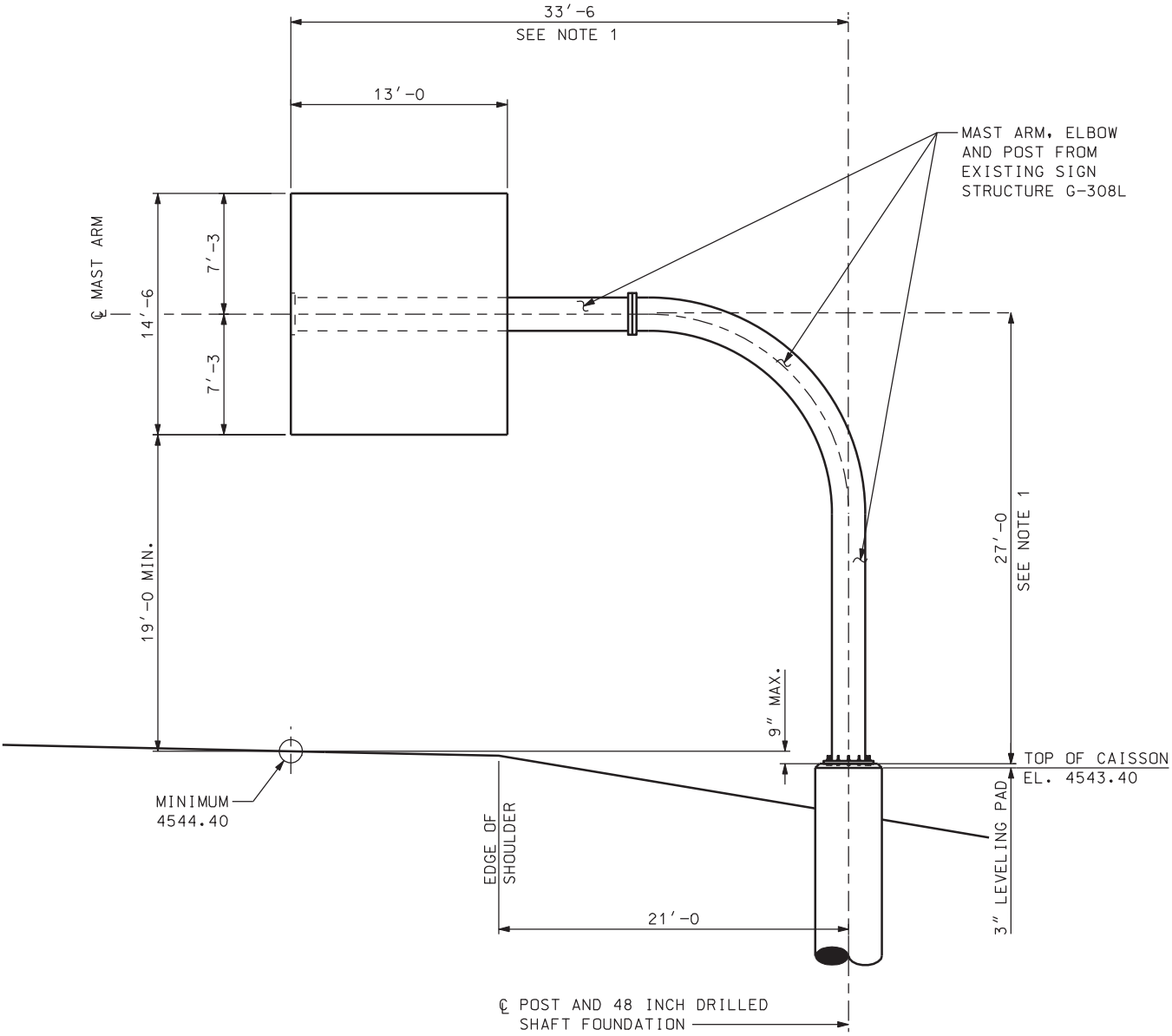


## G-319D ELEVATION VIEW, SOUTHBOUND

G-319D LOOKING AHEAD IN THE DIRECTION OF TRAFFIC
STA. 737+00 S.B.

## NOTES:

1. SEE FOR INFORMATION ONLY SHEETS, DRG. NO. G-308, FOR EXISTING SIGN SUPPORT INFORMATION.

| NO. | DATE | BY | REMARKS |
|---|---|---|---|

REVISIONS

UTAH DEPARTMENT OF TRANSPORTATION
SALT LAKE CITY, UTAH
STRUCTURES DIVISION

DESIGN MDR 02/05 CHECK HCB 02/05
DRAWN LM 02/05 CHECK MDR 02/05
QUANT. CHECK

APPROVAL RECOMM. DATE SENIOR DESIGN ENGR.
APPROVED FOR USE BY UDOT DATE UDOT BRIDGE ENGR.

I-15: CORRIDOR IN UTAH COUNTY
CANTILEVER SIGNS
SIGN G-319C, SIGN G-319D

PROJECT NUMBER SP-15-6(52)241

UTAH
COUNTY

G-319
DRG. NO.

SHT. 3 OF 7

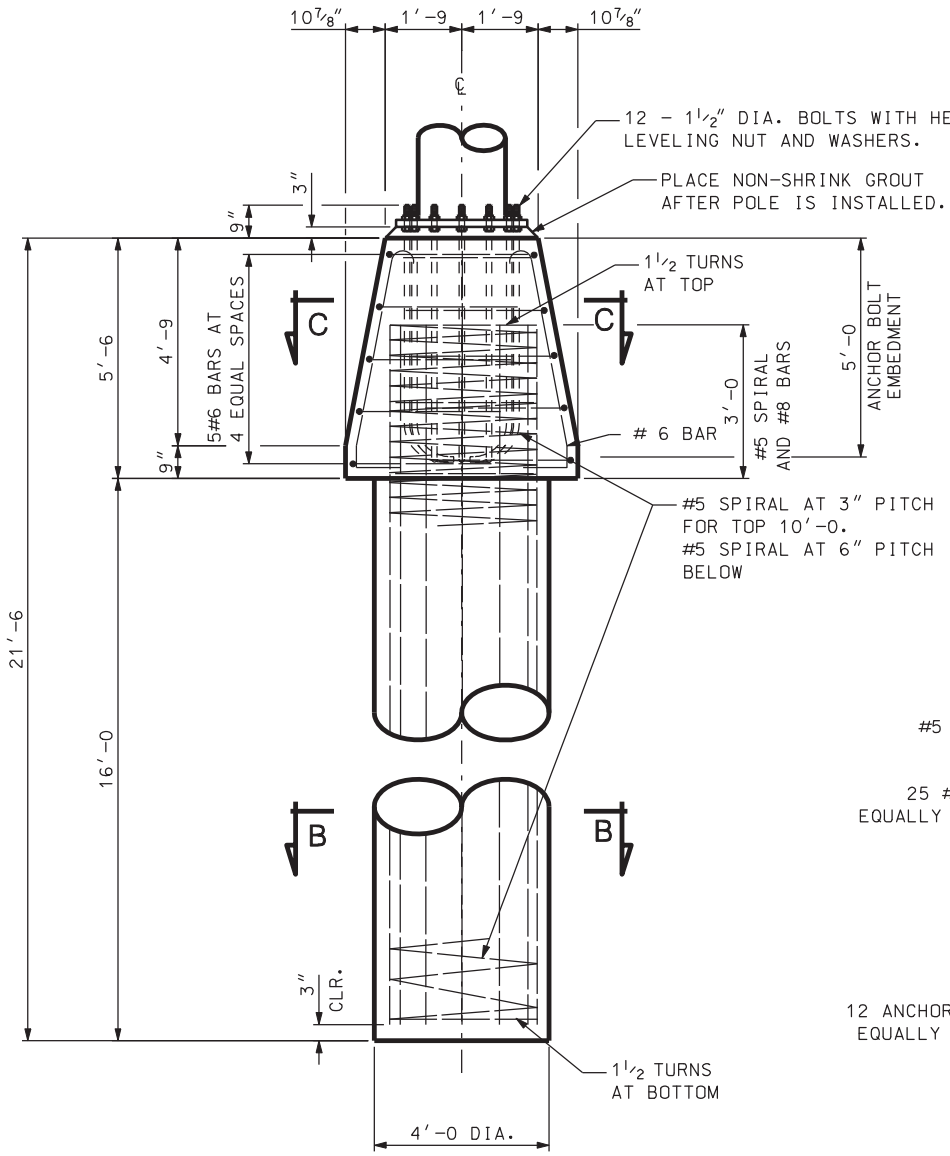


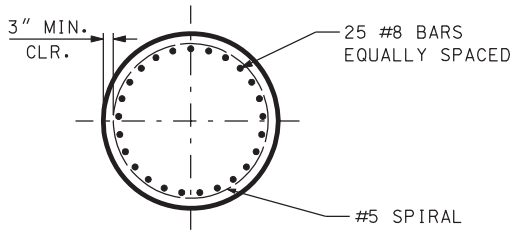


SECTION B-B

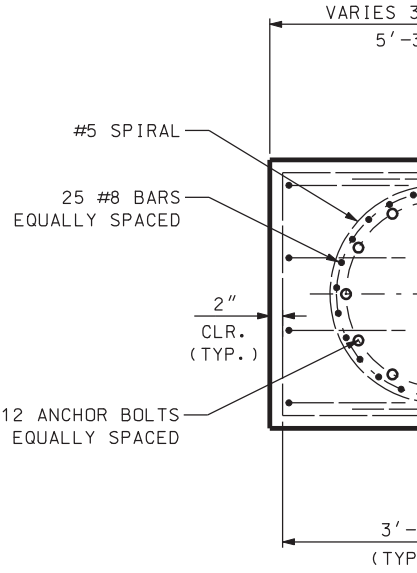


SECTI

MODIFIED DRILLED SHAFT DETAILS

DGN File: N:\Projects\4433.04\Sheet.Files\Structures\sign\4433.g-319-04_modrillshaft.dgn

05-MAY-2005

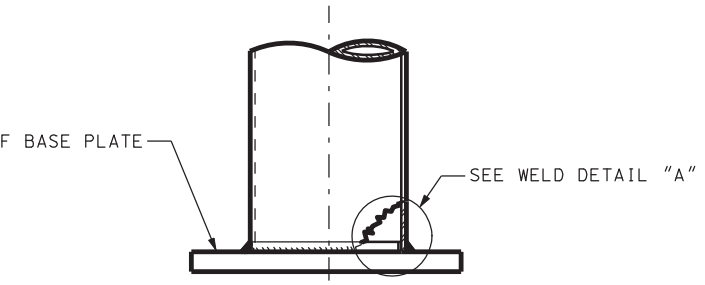


POST BASE ELEVATION

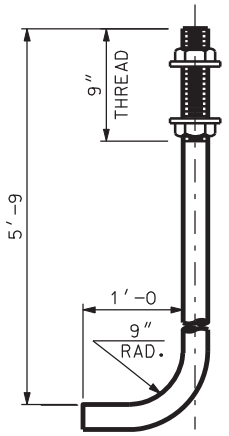


ANCHOR BOLT DETAIL

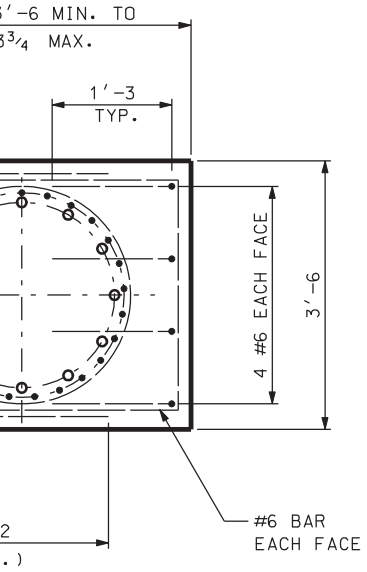


ION C-C

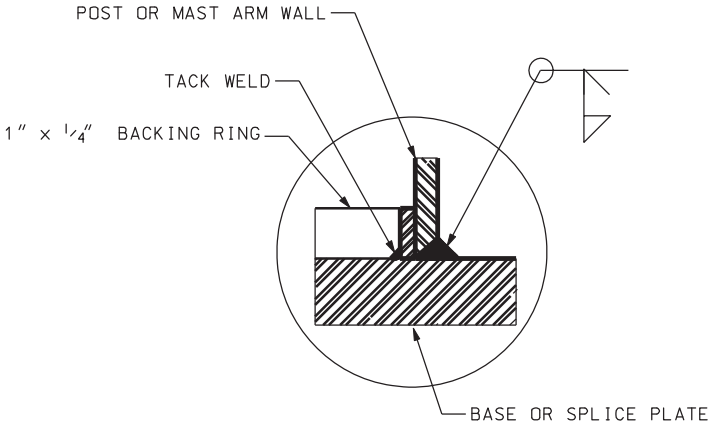


WELD DETAIL "A"

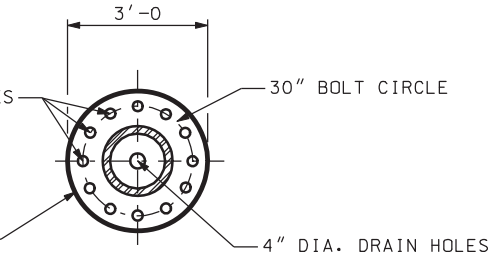


BASE PLATE

(12 HOLES)

## NOTES:

1. ALL 90° AND 180° HOOKS ARE STANDARD HOOKS UNLESS NOTED OTHERWISE.
2. SEE DRAWING NO. R-449 FOR TRANSITION OF CONCRETE BARRIER STEPPED PAVEMENT TYPE IN AND OUT OF CANTILEVER SIGNS.

| NO. | DATE | BY | REMARKS |
|---|---|---|---|

REVISIONS

UTAH DEPARTMENT OF TRANSPORTATION
SALT LAKE CITY, UTAH
STRUCTURES DIVISION

DESIGN RH 12/04 CHECK HCB 12/04
DRAWN VHB 12/04 CHECK RH 12/04
QUANT. RH 01/05 CHECK HCB 01/05

APPROVAL RECOMM. DATE SENIOR DESIGN ENGR.
APPROVED FOR USE BY UDOT DATE UDOT BRIDGE ENGR.

I-15: CORRIDOR IN UTAH COUNTY
CANTILEVER SIGNS
MODIFIED DRILLED SHAFT FOUNDATION DETAILS

PROJECT NUMBER SP-15-6(52)241

UTAH
COUNTY

G-319
DRG. NO.

SHT. 4 OF 7

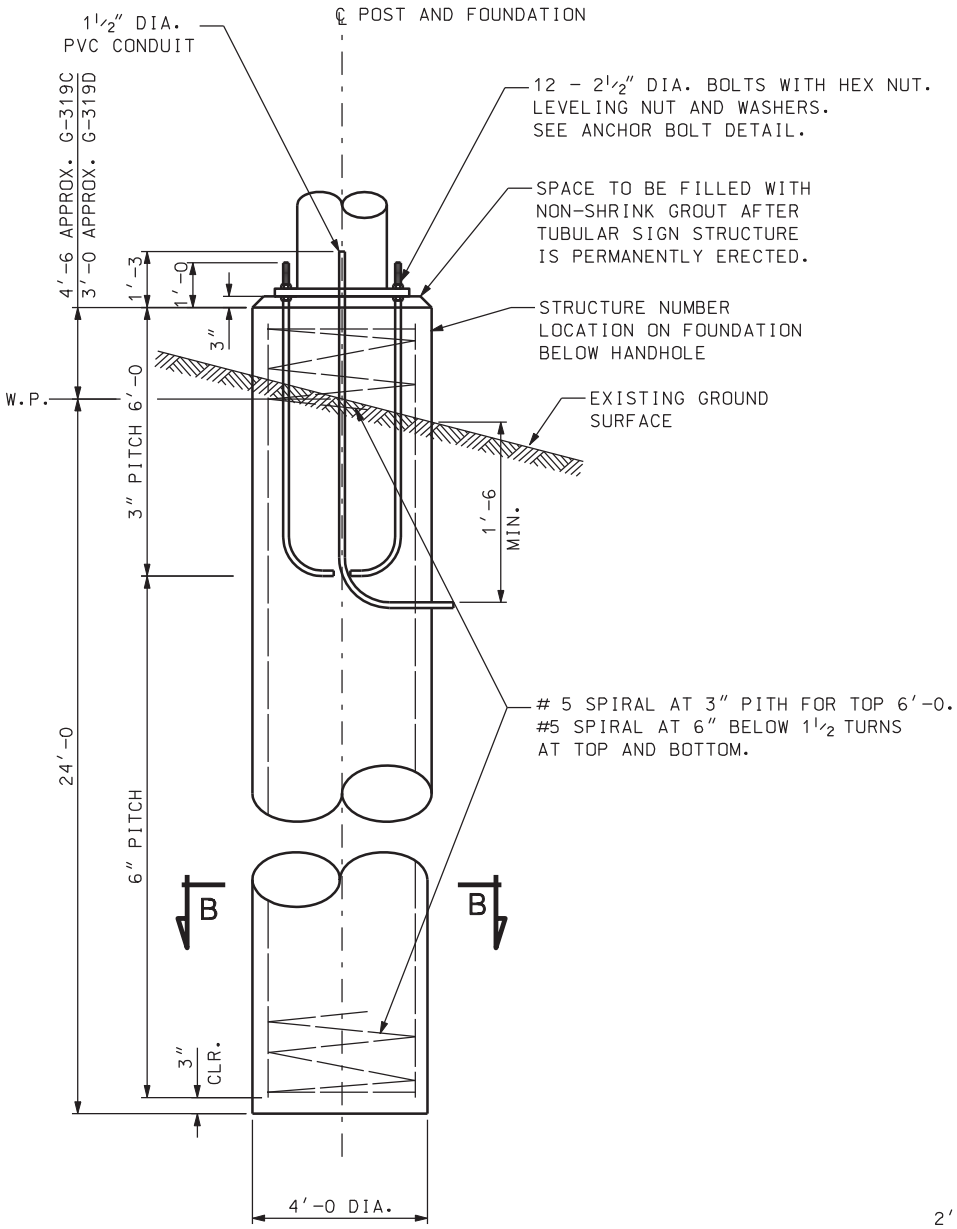


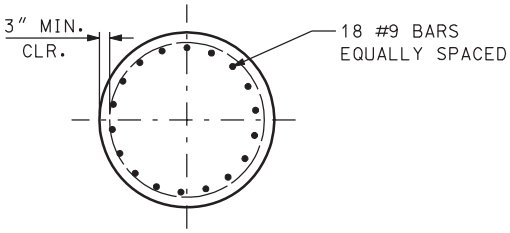


SECTION B-B

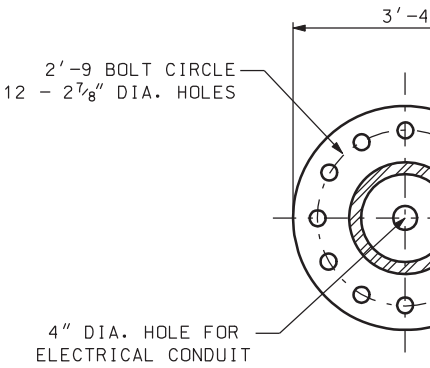


BASE PI

(FOR REFEREN
LOCATE ANCHO
DRILLED SHAF

DRILLED SHAFT DETAILS

DGN File: N:\Projects\4433.04\Sheet.Files\Structures\sign\4433.g-319-05.drillfoundation.dgn
05-MAY-2005

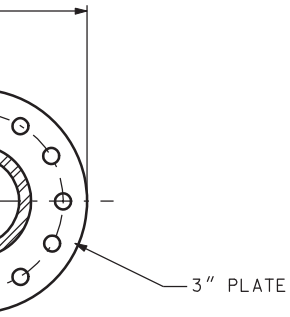


LATE

NCE ONLY TO
OR BOLTS IN
FT)

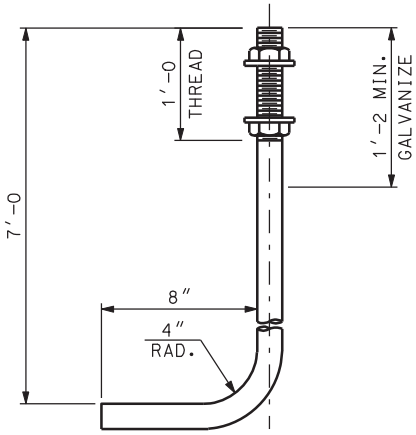


ANCHOR BOLT DETAIL

| NO. | DATE | BY | REMARKS |
|---|---|---|---|
| | | | |

REVISIONS

UTAH DEPARTMENT OF TRANSPORTATION
SALT LAKE CITY, UTAH
STRUCTURES DIVISION

DESIGN MDR 02/05 CHECK HCB 02/05
DRAWN LM 02/05 CHECK MDR 02/05
QUANT. ____ CHECK ____

APPROVAL RECOMM. ____ DATE ____ SENIOR DESIGN ENGR.
APPROVED FOR USE BY UDOT ____ DATE ____ UDOT BRIDGE ENGR.

I-15; CORRIDOR IN UTAH COUNTY
CANTILEVER SIGNS
DRILLED SHAFT FOUNDATION DETAILS

PROJECT NUMBER SP-15-6(52)241

UTAH
COUNTY

G-319
DRG. NO.

SHT. 5 OF 7

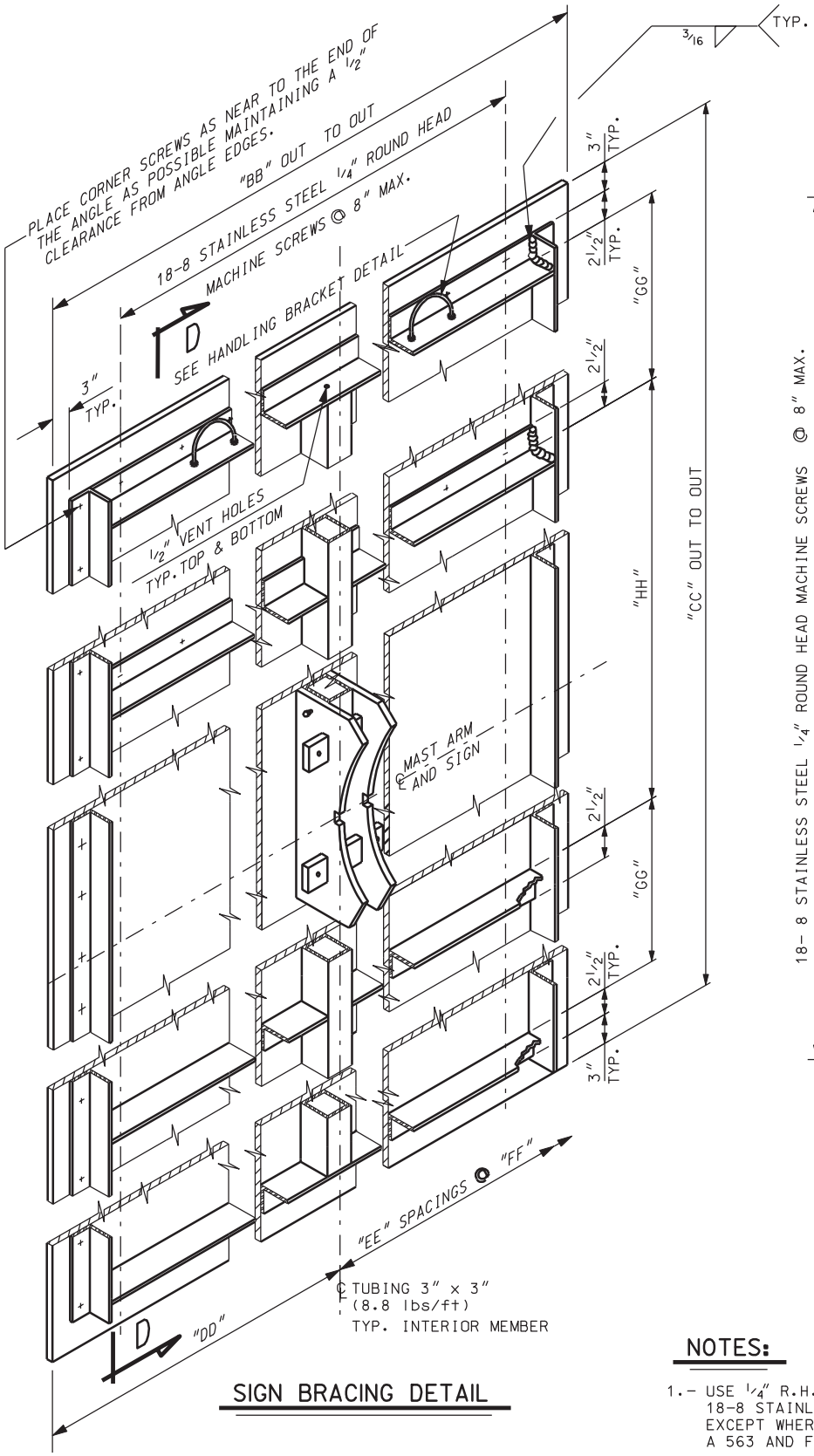


## SIGN BRACING DETAIL

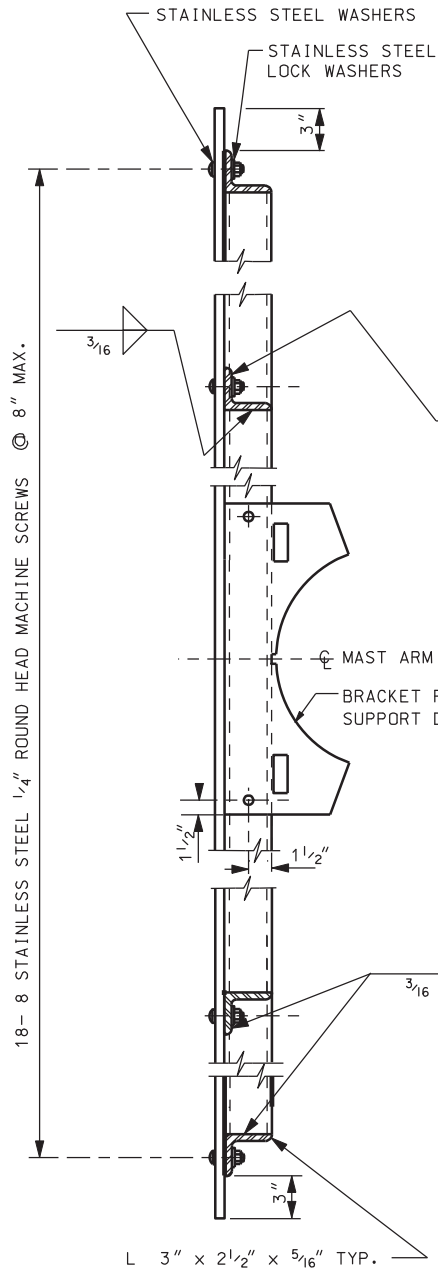


## SECTION D-D

SEE SECTION C-C ON SHEET "SIGN SUPP
DETAILS" FOR BRACKET PLATE DETAILS.

## NOTES:

1.- USE 1/4" R.H. MACHINE SCREWS AND WASHERS IN THE
18-8 STAINLESS STEEL. OTHER BOLTS WILL MEET AST
EXCEPT WHERE NOTED OTHERWISE. THE NUTS AND WASH
A 563 AND F 436 SPECIFICATIONS RESPECTIVELY.

2.- USE BOTH 1/4" FLAT AND LOCK WASHERS ON ALL 1/4" R.
WASHERS ON ALL BOLTS.

3.- GALVANIZE THE ENTIRE SIGN BRACING ASSEMBLY COMP
BRACKETS IN ACCORDANCE WITH AASHTO M 111 (ASTM

4.- USE GALVANIZED BOLTS, NUTS, AND WASHERS CONFORM

5.- BRACING BACK PLATES (4" x 5/16" x VARIES) REQUIRE
VERTICAL AND HORIZONTAL SEAMS.

DGN File: N:\Projects\4433.04\Sheet.Files\Structures\sign\4433.g-319-06.bracing.dgn
05-MAY-2005

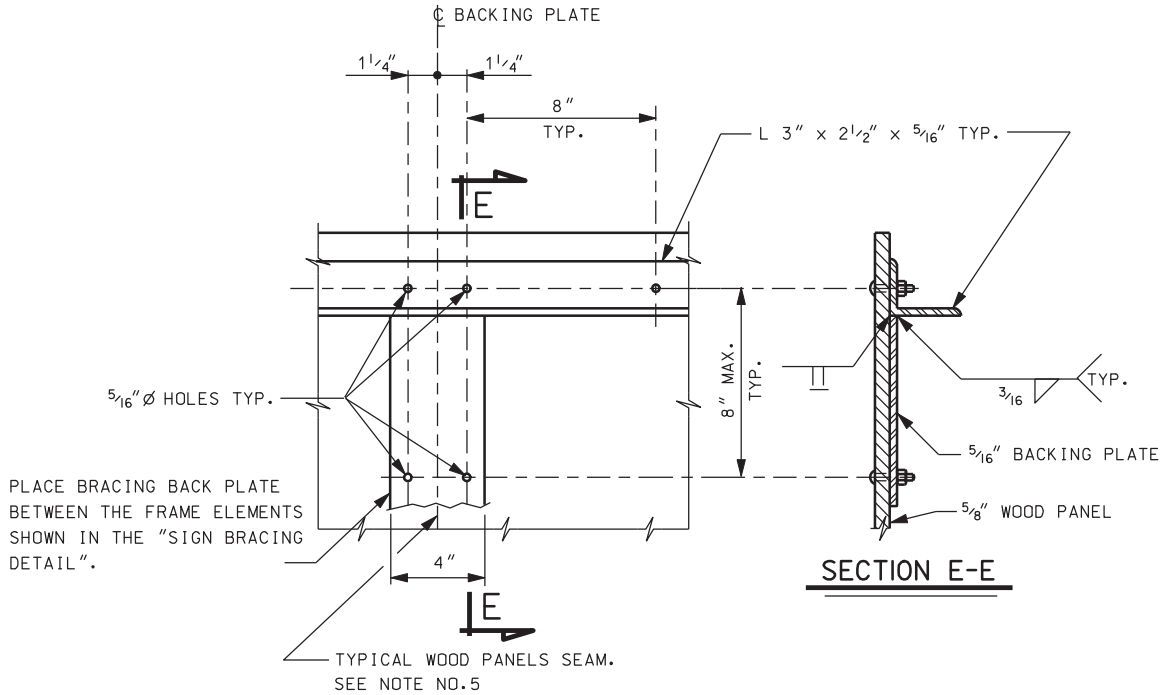


SECTION E-E

DETAIL "D"

PLATE, SEE "SIGN
DETAILS" SHEET.

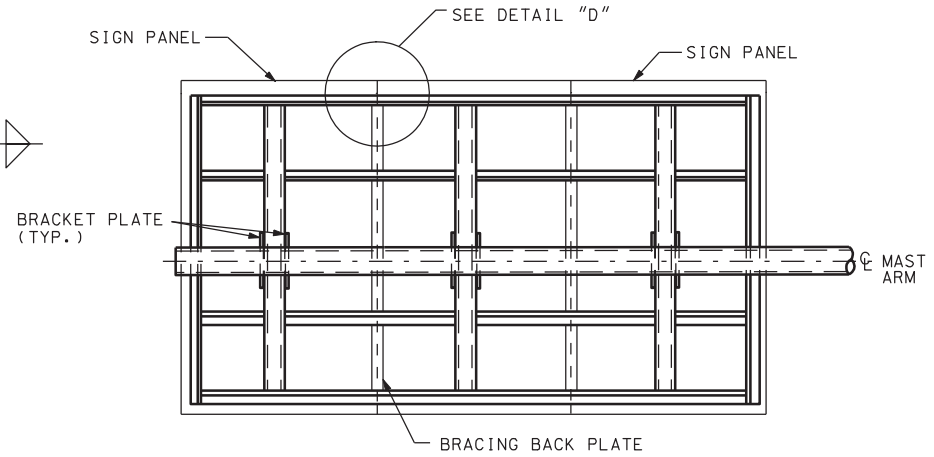


SIGN PANEL LAYOUT

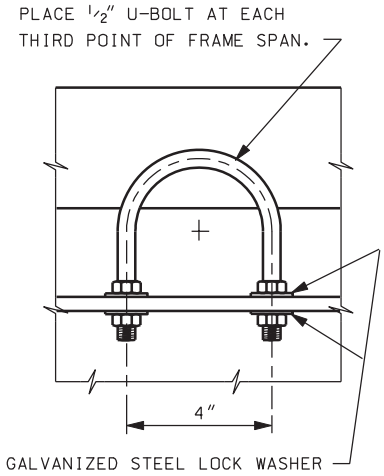


HANDLING BRACKET DETAIL

ORT

SIGN FACE THAT ARE
TM A 307 SPECIFICATION
HERS WILL MEET ASTM

.H. SCREWS. USE LOCK

PLETED WITH MOUNTING
A 123).

MING TO AASHTO M 232.

ED AT THE WOOD PANELS

| SIGN LAYOUT AND BRACING DIMENSIONS | | | | |
|---|---|---|---|---|
| | G - 319A | G - 319B | G - 319C | G - 319D |
| SIZE BB X CC | 15' X 8'-6 | 20' x 11' | 13' x 13'-6 | 13' x 14'-6 |
| DD | 2'- 6 | 2'- 6 | 2'- 6 | 2'- 6 |
| EE | 4 | 5 | 3 | 3 |
| FF | 2'- 6 | 3'- 0 | 2'- 8 | 2'- 8 |
| GG | 2'- 0 | 3'- 0 | 4'- 0 | 4'- 6 |
| HH | 3'- 7 | 4'- 1 | 4'- 7 | 4'- 7 |

REVISIONS

| NO. | DATE | BY | REMARKS |
|---|---|---|---|

UTAH DEPARTMENT OF TRANSPORTATION
SALT LAKE CITY, UTAH
STRUCTURES DIVISION

DESIGN RH 12/04 CHECK HCB 12/04
DRAWN VHB 12/04 CHECK RH 12/04
QUANT. RH 01/05 CHECK HCB 01/05

APPROVAL RECOMM. DATE SENIOR DESIGN ENGR.
APPROVED FOR USE BY UDOT DATE UDOT BRIDGE ENGR.

I-15; CORRIDOR IN UTAH COUNTY
CANTILEVER SIGNS
SIGN BRACING DETAILS

PROJECT NUMBER SP-15-6(52)241

UTAH
COUNTY

G-319
DRG. NO.

SHT. 6 OF 7

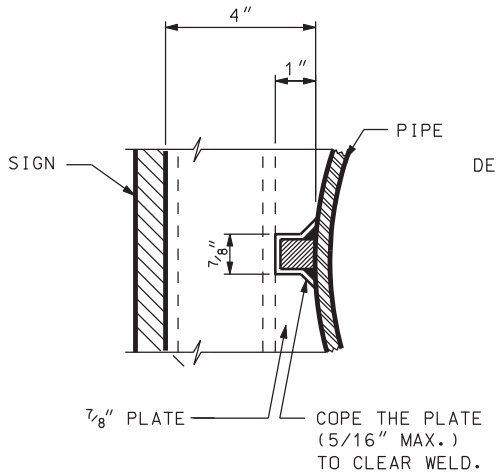


DETAIL "A"

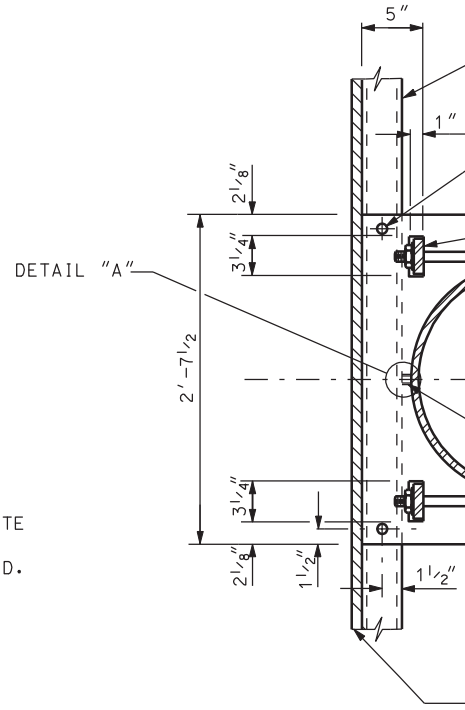


SECTION C-C

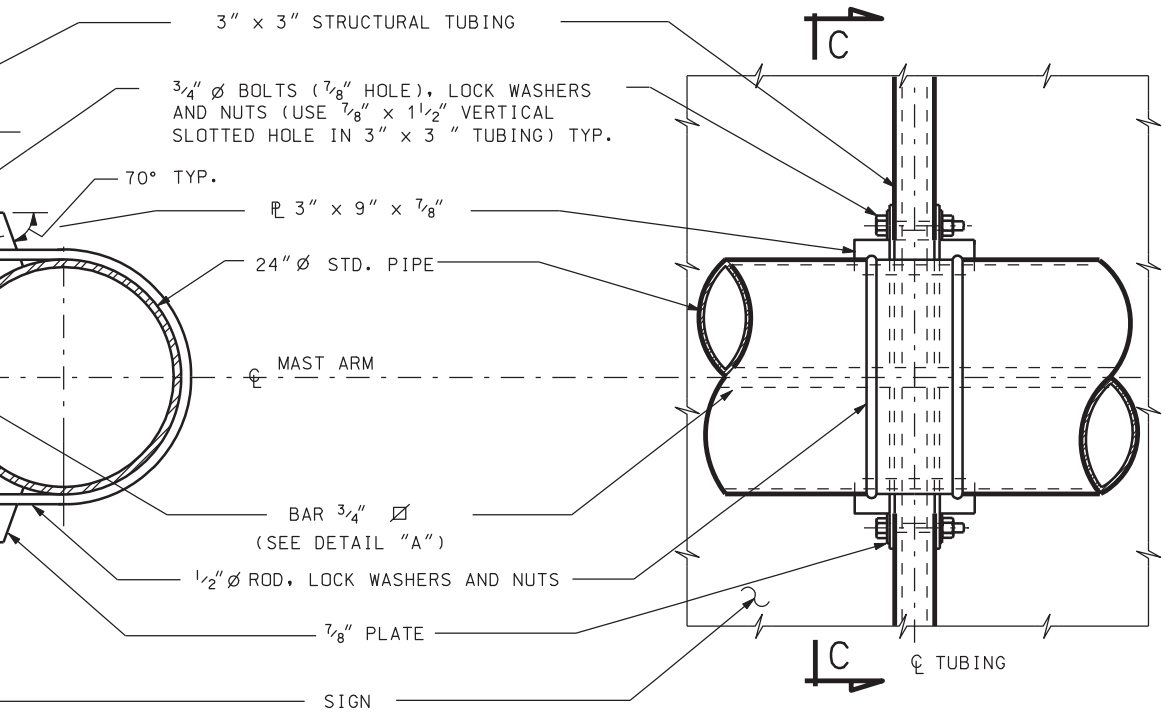


BACK ELEVATION

SIGN SUPPORT DETAILS

| NO. | DATE | BY | REMARKS |
|---|---|---|---|
| | | | |

REVISIONS

UTAH DEPARTMENT OF TRANSPORTATION
SALT LAKE CITY, UTAH
STRUCTURES DIVISION

DESIGN RH 12/04 CHECK HCB 12/04
DRAWN VHB 12/04 CHECK RH 12/04
QUANT. RH 01/05 CHECK HCB 01/05

APPROVAL RECOMM. DATE SENIOR DESIGN ENGR.
APPROVED FOR USE BY UDOT DATE UDOT BRIDGE ENGR.

I-15; CORRIDOR IN UTAH COUNTY
CANTILEVER SIGNS
SIGN SUPPORT DETAILS

PROJECT NUMBER SP-15-6(52)241

UTAH
COUNTY

G-319
DRG. NO.

SHT. 7 OF 7

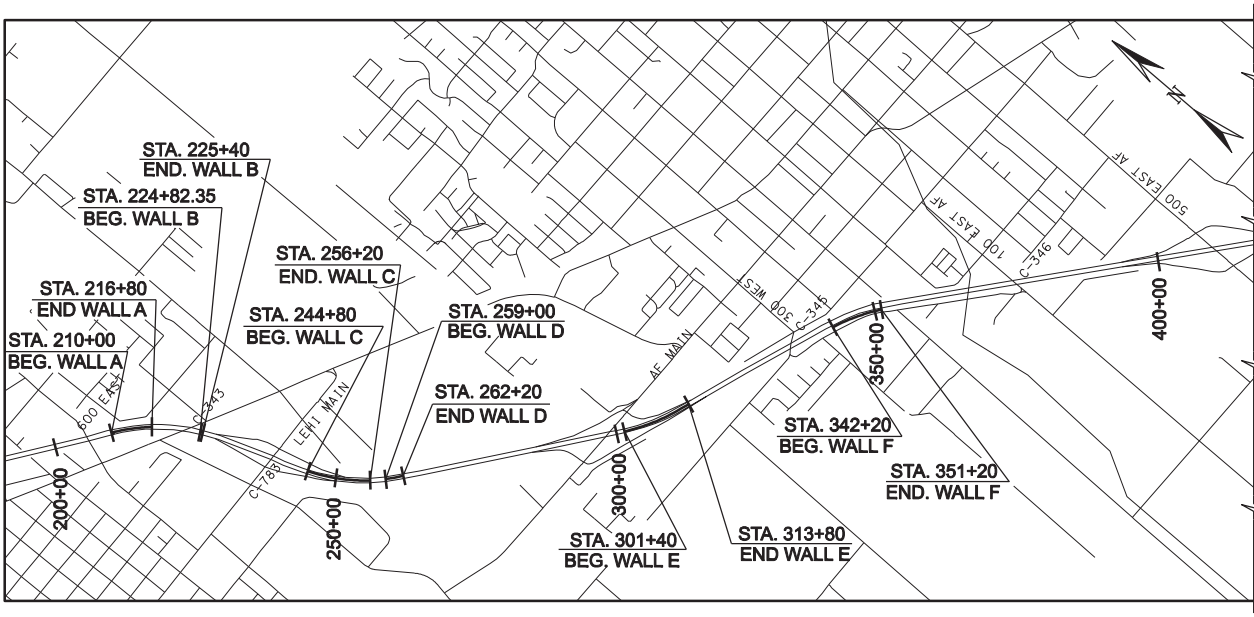


| MEDIAN WALL A, LENGTH = 680' | | | | | | |
|---|---|---|---|---|---|---|
| STA. 210+00 to STA. 216+80 | | | | | | |
| I-15 CENTER LINE STATION | BARRIER SECTION | ELEVATION AT POINT A | ELEVATION AT POINT B | HORIZONTAL OFFSET FROM POINT B TO POINT C (BARRIER TOE) | HEIGHT BETWEEN POINT B AND POINT C | ELEVATION AT POINT C |
| | | FT | FT | FT | FT | FT |
| 210+00 | TYPE 2 | 4522.656 | 4522.656 | 0.20 | 1.063 | 4521.593 |
| 210+20 | TYPE 2 | 4523.009 | 4523.009 | 0.23 | 1.203 | 4521.806 |
| 210+40 | TYPE 2 | 4523.351 | 4523.351 | 0.25 | 1.322 | 4522.029 |
| 210+60 | TYPE 2 | 4523.678 | 4523.678 | 0.27 | 1.410 | 4522.268 |
| 210+80 | TYPE 2 | 4523.995 | 4523.995 | 0.28 | 1.457 | 4522.538 |
| 211+00 | TYPE 2 | 4524.293 | 4524.293 | 0.28 | 1.468 | 4522.825 |
| 211+20 | TYPE 2 | 4524.562 | 4524.562 | 0.28 | 1.456 | 4523.106 |
| 211+40 | TYPE 2 | 4524.811 | 4524.811 | 0.27 | 1.434 | 4523.377 |
| 211+60 | TYPE 2 | 4525.045 | 4525.045 | 0.27 | 1.403 | 4523.642 |
| 211+80 | TYPE 2 | 4525.283 | 4525.283 | 0.26 | 1.364 | 4523.919 |
| 212+00 | TYPE 2 | 4525.548 | 4525.548 | 0.26 | 1.339 | 4524.209 |
| 212+20 | TYPE 2 | 4525.828 | 4525.828 | 0.25 | 1.326 | 4524.502 |
| 212+40 | TYPE 2 | 4526.096 | 4526.096 | 0.25 | 1.308 | 4524.788 |
| 212+60 | TYPE 2 | 4526.368 | 4526.368 | 0.25 | 1.303 | 4525.065 |
| 212+80 | TYPE 2 | 4526.659 | 4526.659 | 0.25 | 1.315 | 4525.344 |
| 213+00 | TYPE 2 | 4526.941 | 4526.941 | 0.25 | 1.309 | 4525.632 |
| 213+20 | TYPE 2 | 4527.220 | 4527.220 | 0.24 | 1.282 | 4525.938 |
| 213+40 | TYPE 2 | 4527.522 | 4527.522 | 0.24 | 1.253 | 4526.269 |
| 213+60 | TYPE 2 | 4527.831 | 4527.831 | 0.23 | 1.230 | 4526.601 |
| 213+80 | TYPE 2 | 4528.126 | 4528.126 | 0.23 | 1.215 | 4526.911 |
| 214+00 | TYPE 2 | 4528.421 | 4528.421 | 0.23 | 1.212 | 4527.209 |
| 214+20 | TYPE 2 | 4528.748 | 4528.748 | 0.24 | 1.248 | 4527.500 |
| 214+40 | TYPE 2 | 4529.109 | 4529.109 | 0.25 | 1.334 | 4527.775 |
| 214+60 | TYPE 2 | 4529.450 | 4529.450 | 0.27 | 1.431 | 4528.019 |
| 214+80 | TYPE 2 | 4529.734 | 4529.734 | 0.28 | 1.493 | 4528.241 |
| 215+00 | TYPE 2 | 4529.979 | 4529.979 | 0.28 | 1.486 | 4528.493 |
| 215+20 | TYPE 2 | 4530.219 | 4530.219 | 0.27 | 1.408 | 4528.811 |
| 215+40 | TYPE 2 | 4530.458 | 4530.458 | 0.25 | 1.307 | 4529.151 |
| 215+60 | TYPE 2 | 4530.677 | 4530.677 | 0.23 | 1.205 | 4529.472 |
| 215+80 | TYPE 2 | 4530.897 | 4530.897 | 0.21 | 1.114 | 4529.783 |
| 216+00 | TYPE 2 | 4531.198 | 4531.198 | 0.21 | 1.123 | 4530.075 |
| 216+20 | TYPE 2 | 4531.528 | 4531.528 | 0.22 | 1.179 | 4530.349 |
| 216+40 | TYPE 2 | 4531.825 | 4531.825 | 0.23 | 1.200 | 4530.625 |
| 216+60 | TYPE 2 | 4532.123 | 4532.123 | 0.22 | 1.176 | 4530.947 |
| 216+80 | TYPE 2 | 4532.381 | 4532.381 | 0.20 | 1.061 | 4531.320 |

LOCAT

IND

1. WA
2. WA
3. WA
4. WA
5. WA
6. WA
7. TY
8. TY
9. WA

POINT B

POINT C

FINISHED GRADE

DGN File: N:\Projects\4433.04\Sheet.Files\Structures\medianwall\4433.medwalsh1.01.dgn
05-MAY-2005

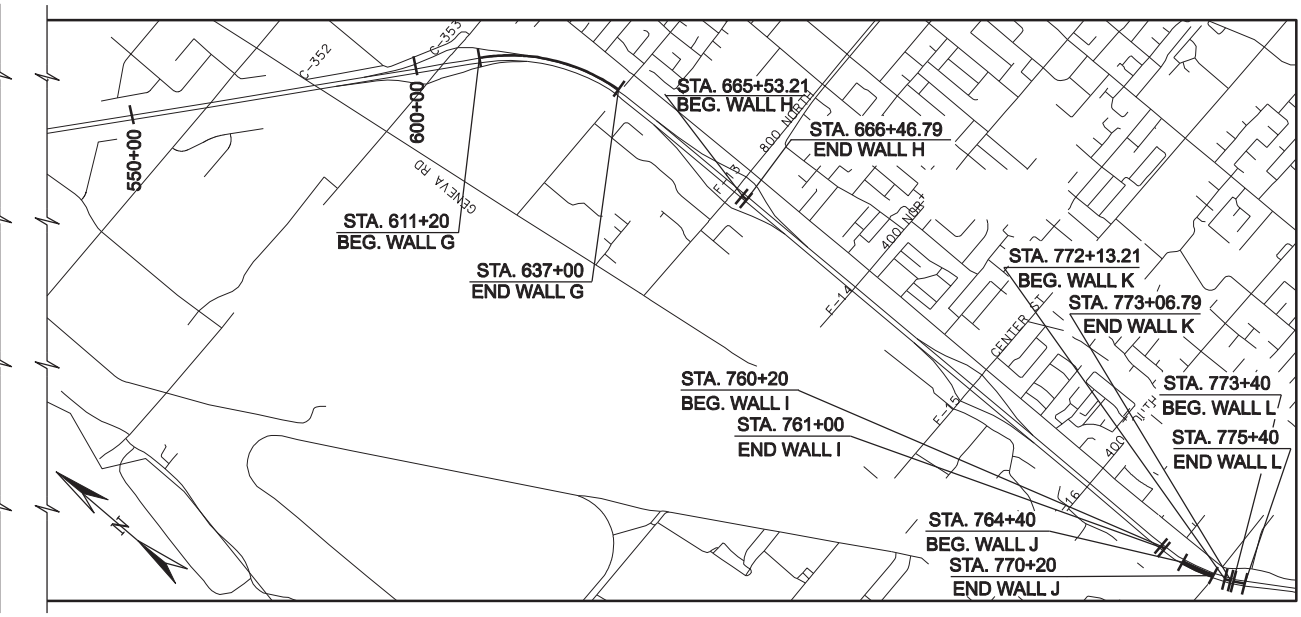


## TION PLAN

## EX OF SHEETS


ALL A AND GENERAL NOTES
ALL B AND WALL C
ALL D AND WALL E
ALL F AND WALL G
ALL G CONTINUED
ALL I, WALL J AND WALL L
YPE 1A DETAILS
YPE 1B AND TYPE 2 DETAILS
ALL H AND WALL K


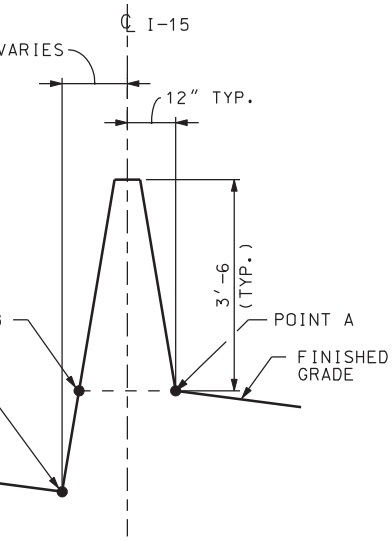


## ELEVATION KEY

## GENERAL NOTES

1. USE COATED DEFORMED-BILLET REINFORCING STEEL BARS CONFORMING TO AASHTO M 284 OR M 111 AND M 31 GRADE 60 RESPECTIVELY.
2. CHAMFER ALL EXPOSED CONCRETE CORNERS ¾" EXCEPT WHERE NOTED OTHERWISE.
3. PROVIDE 2" CONCRETE COVER TO REINFORCING STEEL EXCEPT WHERE NOTED OTHERWISE
4. USE CLASS AA(AE) CAST-IN-PLACE CONCRETE EXCEPT WHERE SPECIFIED OTHERWISE.
5. SEE "ELEVATION KEY" FOR LOCATIONS OF POINT A, POINT B, AND POINT C.
6. USE TYPE 1A OR TYPE 1B SECTIONS FOR BARRIER SECTION TYPE 1. THE CONTRACTOR CAN REPLACE TYPE 2 SECTIONS WITH TYPE 1A OR TYPE 1B SECTIONS.
7. SEE SHEET "TYPE 1A DETAILS" AND SHEET "TYPE 1B AND TYPE 2 DETAILS FOR TYPICAL BARRIER SECTIONS.

## DESIGN DATA

HL-93 IN ACCORDANCE WITH CURRENT AASHTO LRFD BRIDGE DESIGN SPECIFICATIONS AND INTERIM SPECIFICATIONS.

CAST-IN-PLACE CONCRETE: $f'_c$ = 4000 PSI; $f_y$ (REINF.) = 60,000 PSI;
CLASS AA (AE) $n$ = 8

DESIGN IMPACT: TL-4

## QUANTITIES

| ITEM | ESTIM. | UNIT | AS CONST. |
|---|---|---|---|
| CONCRETE BARRIER-STEPPED PAVEMENT TYPE | 7958' | FEET | |
| | | | |

REVISIONS

| NO. | DATE | BY | REMARKS |
|---|---|---|---|
| | | | |

UTAH DEPARTMENT OF TRANSPORTATION
SALT LAKE CITY, UTAH
STRUCTURES DIVISION

DESIGN HCB 12/04 CHECK RH 12/04
DRAWN VHB 12/04 CHECK HCB 12/04
QUANT. HCB 12/04 CHECK VHB 01/05

APPROVAL RECOMM. DATE SENIOR DESIGN ENGR.
APPROVED FOR USE BY UDOT DATE UDOT BRIDGE ENGR.

I-15; CORRIDOR IN UTAH COUNTY
CONCRETE BARRIER-STEPPED PAVEMENT TYPE
WALL A AND GENERAL NOTES

PROJECT NUMBER SP-15-6(52)241

UTAH
COUNTY

R-449
DRG. NO.

SHT. 1 OF 9

| MEDIAN WALL B, LENGTH = 57.65' | | | | | | |
|---|---|---|---|---|---|---|
| STA. 224+82.35 to STA. 225+40 | | | | | | |
| I-15 CENTER LINE STATION | BARRIER SECTION | ELEVATION AT POINT A | ELEVATION AT POINT B | HORIZONTAL OFFSET FROM POINT B TO POINT C (BARRIER TOE) | HEIGHT BETWEEN POINT B AND POINT C | ELEVATION AT POINT C |
| | | FT | FT | FT | FT | FT |
| 224+82.35* | TYPE 2 | 4537.280 | 4537.280 | 0.25 | 1.290 | 4535.990 |
| 225+00 | TYPE 2 | 4537.157 | 4537.157 | 0.25 | 1.298 | 4535.859 |
| 225+20 | TYPE 2 | 4536.974 | 4536.974 | 0.24 | 1.27 | 4535.704 |
| 225+40 | TYPE 2 | 4536.75 | 4536.75 | 0.22 | 1.132 | 4535.618 |

*STATION 224+82.35 IS THE END OF STRUCTURE C-343 APPROACH SLAB. TAPER THE TYPE 2 SECTION FROM "TYPE 2 SECTION AT BRIDGE APROACH SLAB" TO "TYPE 2 TYPICAL SECTION" OVER A DISTANCE OF 15'-0.

## NOTES:

1. SEE "ELEVATION KEY" ON SHEET "WALL A AND GENERAL NOTES" FOR LOCATION OF POINT A, POINT B AND POINT C.
2. SEE SHEET "TYPE 1A DETAILS" AND SHEET "TYPE 1B AND TYPE 2 DETAILS" FOR TYPICAL BARRIER SECTIONS.

05-MAY-2005 DGN File:N:\Projects\4433.04\Sheet.Files\Structures\medianwall\4433.medwaltable-bc.02.dgn

## MEDIAN WALL C, LENGTH = 1140'

STA. 244+80 to STA. 256+20

| I-15 CENTER LINE STATION | BARRIER SECTION | ELEVATION AT POINT A | ELEVATION AT POINT B | HORIZONTAL OFFSET FROM POINT B TO POINT C (BARRIER TOE) | HEIGHT BETWEEN POINT B AND POINT C | ELEVATION AT POINT C |
|---|---|---|---|---|---|---|
| | | FT | FT | FT | FT | FT |
| 244+80 | TYPE 2 | 4507.031 | 4507.031 | 0.22 | 1.160 | 4505.871 |
| 245+00 | TYPE 2 | 4506.664 | 4506.664 | 0.23 | 1.182 | 4505.482 |
| 245+20 | TYPE 2 | 4506.300 | 4506.300 | 0.23 | 1.226 | 4505.074 |
| 245+40 | TYPE 2 | 4505.909 | 4505.909 | 0.24 | 1.249 | 4504.660 |
| 245+60 | TYPE 2 | 4505.518 | 4505.518 | 0.24 | 1.266 | 4504.252 |
| 245+80 | TYPE 2 | 4505.129 | 4505.129 | 0.24 | 1.276 | 4503.853 |
| 246+00 | TYPE 2 | 4504.736 | 4504.736 | 0.24 | 1.270 | 4503.466 |
| 246+20 | TYPE 2 | 4504.359 | 4504.359 | 0.24 | 1.259 | 4503.100 |
| 246+40 | TYPE 2 | 4503.976 | 4503.976 | 0.24 | 1.240 | 4502.736 |
| 246+60 | TYPE 2 | 4503.597 | 4503.597 | 0.23 | 1.221 | 4502.376 |
| 246+80 | TYPE 2 | 4503.250 | 4503.250 | 0.23 | 1.231 | 4502.019 |
| 247+00 | TYPE 2 | 4502.899 | 4502.899 | 0.24 | 1.244 | 4501.655 |
| 247+20 | TYPE 2 | 4502.526 | 4502.526 | 0.24 | 1.270 | 4501.256 |
| 247+40 | TYPE 2 | 4502.133 | 4502.133 | 0.24 | 1.285 | 4500.848 |
| 247+60 | TYPE 2 | 4501.740 | 4501.740 | 0.24 | 1.270 | 4500.470 |
| 247+80 | TYPE 2 | 4501.405 | 4501.405 | 0.25 | 1.311 | 4500.094 |
| 248+00 | TYPE 2 | 4501.055 | 4501.055 | 0.26 | 1.379 | 4499.676 |
| 248+20 | TYPE 2 | 4500.655 | 4500.655 | 0.26 | 1.349 | 4499.306 |
| 248+40 | TYPE 2 | 4500.264 | 4500.264 | 0.25 | 1.310 | 4498.954 |
| 248+60 | TYPE 2 | 4499.877 | 4499.877 | 0.24 | 1.285 | 4498.592 |
| 248+80 | TYPE 2 | 4499.495 | 4499.495 | 0.25 | 1.299 | 4498.196 |
| 249+00 | TYPE 2 | 4499.131 | 4499.131 | 0.25 | 1.296 | 4497.835 |
| 249+20 | TYPE 2 | 4498.718 | 4498.718 | 0.24 | 1.271 | 4497.447 |
| 249+40 | TYPE 2 | 4498.311 | 4498.311 | 0.24 | 1.237 | 4497.074 |
| 249+60 | TYPE 2 | 4497.918 | 4497.918 | 0.23 | 1.222 | 4496.696 |
| 249+80 | TYPE 2 | 4497.511 | 4497.511 | 0.24 | 1.236 | 4496.275 |
| 250+00 | TYPE 2 | 4497.131 | 4497.131 | 0.23 | 1.210 | 4495.921 |
| 250+20 | TYPE 2 | 4496.783 | 4496.783 | 0.23 | 1.211 | 4495.572 |
| 250+40 | TYPE 2 | 4496.433 | 4496.433 | 0.24 | 1.276 | 4495.157 |
| 250+60 | TYPE 2 | 4496.093 | 4496.093 | 0.25 | 1.310 | 4494.783 |
| 250+80 | TYPE 2 | 4495.784 | 4495.784 | 0.26 | 1.371 | 4494.413 |
| 251+00 | TYPE 2 | 4495.465 | 4495.465 | 0.26 | 1.391 | 4494.074 |
| 251+20 | TYPE 2 | 4495.146 | 4495.146 | 0.26 | 1.389 | 4493.757 |
| 251+40 | TYPE 2 | 4494.816 | 4494.816 | 0.26 | 1.372 | 4493.444 |
| 251+60 | TYPE 2 | 4494.450 | 4494.450 | 0.26 | 1.345 | 4493.105 |
| 251+80 | TYPE 2 | 4494.119 | 4494.119 | 0.24 | 1.282 | 4492.837 |
| 252+00 | TYPE 2 | 4493.825 | 4493.825 | 0.24 | 1.234 | 4492.591 |
| 252+20 | TYPE 2 | 4493.536 | 4493.536 | 0.23 | 1.183 | 4492.353 |
| 252+40 | TYPE 2 | 4493.300 | 4493.300 | 0.23 | 1.195 | 4492.105 |
| 252+60 | TYPE 2 | 4493.081 | 4493.081 | 0.24 | 1.251 | 4491.830 |
| 252+80 | TYPE 2 | 4492.872 | 4492.872 | 0.25 | 1.301 | 4491.571 |
| 253+00 | TYPE 2 | 4492.650 | 4492.650 | 0.25 | 1.291 | 4491.359 |
| 253+20 | TYPE 2 | 4492.429 | 4492.429 | 0.25 | 1.291 | 4491.138 |
| 253+40 | TYPE 2 | 4492.199 | 4492.199 | 0.25 | 1.310 | 4490.889 |
| 253+60 | TYPE 2 | 4491.928 | 4491.928 | 0.24 | 1.242 | 4490.686 |
| 253+80 | TYPE 2 | 4491.662 | 4491.662 | 0.23 | 1.182 | 4490.480 |
| 254+00 | TYPE 2 | 4491.424 | 4491.424 | 0.22 | 1.176 | 4490.248 |
| 254+20 | TYPE 2 | 4491.202 | 4491.202 | 0.22 | 1.175 | 4490.027 |
| 254+40 | TYPE 2 | 4491.026 | 4491.026 | 0.22 | 1.147 | 4489.879 |
| 254+60 | TYPE 2 | 4490.902 | 4490.902 | 0.22 | 1.164 | 4489.738 |
| 254+80 | TYPE 2 | 4490.823 | 4490.823 | 0.23 | 1.200 | 4489.623 |
| 255+00 | TYPE 2 | 4490.755 | 4490.755 | 0.24 | 1.253 | 4489.502 |
| 255+20 | TYPE 2 | 4490.696 | 4490.696 | 0.25 | 1.317 | 4489.379 |
| 255+40 | TYPE 2 | 4490.649 | 4490.649 | 0.26 | 1.382 | 4489.267 |
| 255+60 | TYPE 2 | 4490.588 | 4490.588 | 0.26 | 1.377 | 4489.211 |
| 255+80 | TYPE 2 | 4490.508 | 4490.508 | 0.25 | 1.323 | 4489.185 |
| 256+00 | TYPE 2 | 4490.406 | 4490.406 | 0.23 | 1.227 | 4489.179 |
| 256+20 | TYPE 2 | 4490.276 | 4490.276 | 0.21 | 1.096 | 4489.180 |

REVISIONS

| NO. | DATE | BY | REMARKS |
|---|---|---|---|

UTAH DEPARTMENT OF TRANSPORTATION
SALT LAKE CITY, UTAH
STRUCTURES DIVISION

DESIGN HCB 12/04 CHECK RH 12/04
DRAWN VHB 12/04 CHECK HCB 12/04
QUANT. HCB 12/04 CHECK VHB 01/05

APPROVAL RECOMM. DATE SENIOR DESIGN ENGR.
APPROVED FOR USE BY UDOT DATE UDOT BRIDGE ENGR.

I-15: CORRIDOR IN UTAH COUNTY
CONCRETE BARRIER-STEPPED PAVEMENT TYPE
WALL B AND WALL C

PROJECT NUMBER SP-15-6(52)241

UTAH
COUNTY

R-449
DRG. NO.

SHT. 2 OF 9

| MEDIAN WALL D, LENGTH = 320' | | | | | | |
|---|---|---|---|---|---|---|
| STA. 259+00 to STA. 262+20 | | | | | | |
| I-15 CENTER LINE STATION | BARRIER SECTION | ELEVATION AT POINT A | ELEVATION AT POINT B | HORIZONTAL OFFSET FROM POINT B TO POINT C (BARRIER TOE) | HEIGHT BETWEEN POINT B AND POINT C | ELEVATION AT POINT C |
| | | FT | FT | FT | FT | FT |
| 259+00 | TYPE 2 | 4489.205 | 4489.205 | 0.21 | 1.121 | 4488.084 |
| 259+20 | TYPE 2 | 4489.194 | 4489.194 | 0.23 | 1.192 | 4488.002 |
| 259+40 | TYPE 2 | 4489.166 | 4489.166 | 0.24 | 1.275 | 4487.891 |
| 259+60 | TYPE 2 | 4489.128 | 4489.128 | 0.26 | 1.342 | 4487.786 |
| 259+80 | TYPE 2 | 4489.087 | 4489.087 | 0.26 | 1.384 | 4487.703 |
| 260+00 | TYPE 2 | 4489.045 | 4489.045 | 0.27 | 1.435 | 4487.610 |
| 260+20 | TYPE 2 | 4488.997 | 4488.997 | 0.28 | 1.485 | 4487.512 |
| 260+40 | TYPE 2 | 4488.942 | 4488.942 | 0.29 | 1.527 | 4487.415 |
| 260+60 | TYPE 2 | 4488.875 | 4488.875 | 0.30 | 1.564 | 4487.311 |
| 260+80 | TYPE 2 | 4488.796 | 4488.796 | 0.30 | 1.601 | 4487.195 |
| 261+00 | TYPE 2 | 4488.698 | 4488.698 | 0.31 | 1.624 | 4487.074 |
| 261+20 | TYPE 2 | 4488.570 | 4488.570 | 0.31 | 1.610 | 4486.960 |
| 261+40 | TYPE 2 | 4488.404 | 4488.404 | 0.29 | 1.547 | 4486.857 |
| 261+60 | TYPE 2 | 4488.212 | 4488.212 | 0.28 | 1.451 | 4486.761 |
| 261+80 | TYPE 2 | 4488.011 | 4488.011 | 0.26 | 1.347 | 4486.664 |
| 262+00 | TYPE 2 | 4487.810 | 4487.810 | 0.24 | 1.243 | 4486.567 |
| 262+20 | TYPE 2 | 4487.579 | 4487.579 | 0.21 | 1.120 | 4486.459 |

| MEDIAN WALL E, LENGTH = 1240' | | | | | | |
|---|---|---|---|---|---|---|
| STA. 301+40 to STA. 313+80 | | | | | | |
| I-15 CENTER LINE STATION | BARRIER SECTION | ELEVATION AT POINT A | ELEVATION AT POINT B | HORIZONTAL OFFSET FROM POINT B TO POINT C (BARRIER TOE) | HEIGHT BETWEEN POINT B AND POINT C | ELEVATION AT POINT C |
| | | FT | FT | FT | FT | FT |
| 301+40 | TYPE 2 | 4493.235 | 4493.235 | 0.20 | 1.044 | 4492.191 |
| 301+60 | TYPE 2 | 4493.495 | 4493.495 | 0.21 | 1.123 | 4492.372 |
| 301+80 | TYPE 2 | 4493.765 | 4493.765 | 0.23 | 1.204 | 4492.561 |
| 302+00 | TYPE 2 | 4494.028 | 4494.028 | 0.24 | 1.268 | 4492.76 |
| 302+20 | TYPE 2 | 4494.275 | 4494.275 | 0.25 | 1.316 | 4492.959 |
| 302+40 | TYPE 2 | 4494.493 | 4494.493 | 0.25 | 1.337 | 4493.156 |
| 302+60 | TYPE 2 | 4494.686 | 4494.686 | 0.25 | 1.331 | 4493.355 |
| 302+80 | TYPE 2 | 4494.869 | 4494.869 | 0.25 | 1.309 | 4493.56 |
| 303+00 | TYPE 2 | 4495.046 | 4495.046 | 0.24 | 1.280 | 4493.766 |
| 303+20 | TYPE 2 | 4495.23 | 4495.23 | 0.24 | 1.264 | 4493.966 |
| 303+40 | TYPE 2 | 4495.431 | 4495.431 | 0.24 | 1.271 | 4494.16 |
| 303+60 | TYPE 2 | 4495.637 | 4495.637 | 0.25 | 1.290 | 4494.347 |
| 303+80 | TYPE 2 | 4495.843 | 4495.843 | 0.25 | 1.325 | 4494.518 |
| 304+00 | TYPE 2 | 4496.061 | 4496.061 | 0.26 | 1.390 | 4494.671 |
| 304+20 | TYPE 2 | 4496.294 | 4496.294 | 0.28 | 1.466 | 4494.828 |
| 304+40 | TYPE 2 | 4496.526 | 4496.526 | 0.29 | 1.523 | 4495.003 |
| 304+60 | TYPE 2 | 4496.753 | 4496.753 | 0.30 | 1.565 | 4495.188 |
| 304+80 | TYPE 2 | 4496.995 | 4496.995 | 0.31 | 1.615 | 4495.38 |
| 305+00 | TYPE 2 | 4497.266 | 4497.266 | 0.32 | 1.687 | 4495.579 |
| 305+20 | TYPE 2 | 4497.554 | 4497.554 | 0.34 | 1.769 | 4495.785 |
| 305+40 | TYPE 2 | 4497.83 | 4497.83 | 0.35 | 1.835 | 4495.995 |
| 305+60 | TYPE 2 | 4498.094 | 4498.094 | 0.36 | 1.885 | 4496.209 |
| 305+80 | TYPE 2 | 4498.361 | 4498.361 | 0.37 | 1.945 | 4496.416 |
| 306+00 | TYPE 1 | 4498.629 | 4498.629 | 0.39 | 2.031 | 4496.598 |

## MEDIAN WALL E, CONTINIUED

| I-15 CENTER LINE STATION | BARRIER SECTION | ELEVATION AT POINT A | ELEVATION AT POINT B | HORIZONTAL OFFSET FROM POINT B TO POINT C (BARRIER TOE) | HEIGHT BETWEEN POINT B AND POINT C | ELEVATION AT POINT C |
|---|---|---|---|---|---|---|
| | | FT | FT | FT | FT | FT |
| 306+20 | TYPE 1 | 4498.891 | 4498.891 | 0.41 | 2.132 | 4496.759 |
| 306+40 | TYPE 1 | 4499.146 | 4499.146 | 0.42 | 2.229 | 4496.917 |
| 306+60 | TYPE 1 | 4499.395 | 4499.395 | 0.44 | 2.325 | 4497.07 |
| 306+80 | TYPE 1 | 4499.634 | 4499.634 | 0.46 | 2.428 | 4497.206 |
| 307+00 | TYPE 1 | 4499.869 | 4499.869 | 0.48 | 2.545 | 4497.324 |
| 307+20 | TYPE 1 | 4500.098 | 4500.098 | 0.50 | 2.646 | 4497.452 |
| 307+40 | TYPE 1 | 4500.32 | 4500.32 | 0.52 | 2.711 | 4497.609 |
| 307+60 | TYPE 1 | 4500.536 | 4500.536 | 0.52 | 2.756 | 4497.78 |
| 307+80 | TYPE 1 | 4500.742 | 4500.742 | 0.53 | 2.792 | 4497.95 |
| 308+00 | TYPE 1 | 4500.925 | 4500.925 | 0.53 | 2.807 | 4498.118 |
| 308+20 | TYPE 1 | 4501.094 | 4501.094 | 0.54 | 2.816 | 4498.278 |
| 308+40 | TYPE 1 | 4501.271 | 4501.271 | 0.54 | 2.845 | 4498.426 |
| 308+60 | TYPE 1 | 4501.474 | 4501.474 | 0.55 | 2.898 | 4498.576 |
| 308+80 | TYPE 1 | 4501.698 | 4501.698 | 0.57 | 2.968 | 4498.73 |
| 309+00 | TYPE 1 | 4501.926 | 4501.926 | 0.58 | 3.038 | 4498.888 |
| 309+20 | TYPE 1 | 4502.129 | 4502.129 | 0.59 | 3.086 | 4499.043 |
| 309+40 | TYPE 1 | 4502.315 | 4502.315 | 0.60 | 3.129 | 4499.186 |
| 309+60 | TYPE 1 | 4502.497 | 4502.497 | 0.60 | 3.174 | 4499.323 |
| 309+80 | TYPE 1 | 4502.66 | 4502.66 | 0.61 | 3.198 | 4499.462 |
| 310+00 | TYPE 1 | 4502.812 | 4502.812 | 0.61 | 3.210 | 4499.602 |
| 310+20 | TYPE 1 | 4502.965 | 4502.965 | 0.61 | 3.212 | 4499.753 |
| 310+40 | TYPE 1 | 4503.12 | 4503.12 | 0.61 | 3.207 | 4499.913 |
| 310+60 | TYPE 1 | 4503.255 | 4503.255 | 0.60 | 3.166 | 4500.089 |
| 310+80 | TYPE 1 | 4503.362 | 4503.362 | 0.58 | 3.056 | 4500.306 |
| 311+00 | TYPE 1 | 4503.457 | 4503.457 | 0.56 | 2.922 | 4500.535 |
| 311+20 | TYPE 1 | 4503.546 | 4503.546 | 0.54 | 2.815 | 4500.731 |
| 311+40 | TYPE 1 | 4503.629 | 4503.629 | 0.52 | 2.721 | 4500.908 |
| 311+60 | TYPE 1 | 4503.709 | 4503.709 | 0.50 | 2.608 | 4501.101 |
| 311+80 | TYPE 1 | 4503.772 | 4503.772 | 0.47 | 2.449 | 4501.323 |
| 312+00 | TYPE 1 | 4503.834 | 4503.834 | 0.44 | 2.284 | 4501.55 |
| 312+20 | TYPE 1 | 4503.899 | 4503.899 | 0.41 | 2.137 | 4501.762 |
| 312+40 | TYPE 1 | 4503.968 | 4503.968 | 0.38 | 2.011 | 4501.957 |
| 312+60 | TYPE 2 | 4504.028 | 4504.028 | 0.36 | 1.893 | 4502.135 |
| 312+80 | TYPE 2 | 4504.071 | 4504.071 | 0.33 | 1.756 | 4502.315 |
| 313+00 | TYPE 2 | 4504.112 | 4504.112 | 0.31 | 1.606 | 4502.506 |
| 313+20 | TYPE 2 | 4504.149 | 4504.149 | 0.27 | 1.443 | 4502.706 |
| 313+40 | TYPE 2 | 4504.197 | 4504.197 | 0.25 | 1.290 | 4502.907 |
| 313+60 | TYPE 2 | 4504.282 | 4504.282 | 0.22 | 1.168 | 4503.114 |
| 313+80 | TYPE 2 | 4504.386 | 4504.386 | 0.20 | 1.067 | 4503.319 |

## NOTES:

1. SEE "ELEVATION KEY" ON SHEET "WALL A AND GENERAL NOTES" FOR LOCATION OF POINT A, POINT B AND POINT C.
2. SEE SHEET "TYPE 1A DETAILS" AND SHEET "TYPE 1B AND TYPE 2 DETAILS" FOR TYPICAL BARRIER SECTIONS.

REVISIONS

| NO. | DATE | BY | REMARKS |
|---|---|---|---|

UTAH DEPARTMENT OF TRANSPORTATION
SALT LAKE CITY, UTAH
STRUCTURES DIVISION

DESIGN HCB 12/04 CHECK RH 12/04
DRAWN VHB 12/04 CHECK HCB 12/04
QUANT. HCB 12/04 CHECK VHB 01/05

APPROVAL RECOMM. DATE SENIOR DESIGN ENGR.
APPROVED FOR USE BY UDOT DATE UDOT BRIDGE ENGR.

I-15: CORRIDOR IN UTAH COUNTY
CONCRETE BARRIER-STEPPED PAVEMENT TYPE
WALL D AND WALL E

PROJECT NUMBER SP-15-6(52)241

UTAH
COUNTY

R-449
DRG. NO.

SHT. 3 OF 9

| MEDIAN WALL F, LENGTH = 900' | | | | | | |
|---|---|---|---|---|---|---|
| STA. 342+20 to STA. 351+20 | | | | | | |
| I-15 CENTER LINE STATION | BARRIER SECTION | ELEVATION AT POINT A | ELEVATION AT POINT B | HORIZONTAL OFFSET FROM POINT B TO POINT C (BARRIER TOE) | HEIGHT BETWEEN POINT B AND POINT C | ELEVATION AT POINT C |
| | | FT | FT | FT | FT | FT |
| 342+20 | TYPE 2 | 4525.968 | 4525.968 | 0.20 | 1.044 | 4524.924 |
| 342+40 | TYPE 2 | 4525.744 | 4525.744 | 0.21 | 1.125 | 4524.619 |
| 342+60 | TYPE 2 | 4525.52 | 4525.52 | 0.22 | 1.16 | 4524.36 |
| 342+80 | TYPE 2 | 4525.296 | 4525.296 | 0.23 | 1.182 | 4524.114 |
| 343+00 | TYPE 2 | 4525.094 | 4525.094 | 0.23 | 1.212 | 4523.882 |
| 343+20 | TYPE 2 | 4524.907 | 4524.907 | 0.24 | 1.241 | 4523.666 |
| 343+40 | TYPE 2 | 4524.737 | 4524.737 | 0.24 | 1.271 | 4523.466 |
| 343+60 | TYPE 2 | 4524.577 | 4524.577 | 0.25 | 1.29 | 4523.287 |
| 343+80 | TYPE 2 | 4524.431 | 4524.431 | 0.25 | 1.301 | 4523.13 |
| 344+00 | TYPE 2 | 4524.309 | 4524.309 | 0.25 | 1.329 | 4522.98 |
| 344+20 | TYPE 2 | 4524.192 | 4524.192 | 0.26 | 1.37 | 4522.822 |
| 344+40 | TYPE 2 | 4524.072 | 4524.072 | 0.27 | 1.414 | 4522.658 |
| 344+60 | TYPE 2 | 4523.965 | 4523.965 | 0.28 | 1.474 | 4522.491 |
| 344+80 | TYPE 2 | 4523.873 | 4523.873 | 0.29 | 1.542 | 4522.331 |
| 345+00 | TYPE 2 | 4523.779 | 4523.779 | 0.30 | 1.572 | 4522.207 |
| 345+20 | TYPE 2 | 4523.686 | 4523.686 | 0.30 | 1.569 | 4522.117 |
| 345+40 | TYPE 2 | 4523.61 | 4523.61 | 0.30 | 1.577 | 4522.033 |
| 345+60 | TYPE 2 | 4523.562 | 4523.562 | 0.31 | 1.608 | 4521.954 |
| 345+80 | TYPE 2 | 4523.521 | 4523.521 | 0.31 | 1.625 | 4521.896 |
| 346+00 | TYPE 2 | 4523.472 | 4523.472 | 0.31 | 1.628 | 4521.844 |
| 346+20 | TYPE 2 | 4523.42 | 4523.42 | 0.31 | 1.642 | 4521.778 |
| 346+40 | TYPE 2 | 4523.386 | 4523.386 | 0.32 | 1.676 | 4521.71 |
| 346+60 | TYPE 2 | 4523.345 | 4523.345 | 0.32 | 1.687 | 4521.658 |
| 346+80 | TYPE 2 | 4523.25 | 4523.25 | 0.31 | 1.626 | 4521.624 |
| 347+00 | TYPE 2 | 4523.122 | 4523.122 | 0.29 | 1.517 | 4521.605 |
| 347+20 | TYPE 2 | 4523.014 | 4523.014 | 0.27 | 1.426 | 4521.588 |
| 347+40 | TYPE 2 | 4522.901 | 4522.901 | 0.26 | 1.354 | 4521.547 |
| 347+60 | TYPE 2 | 4522.774 | 4522.774 | 0.25 | 1.296 | 4521.478 |
| 347+80 | TYPE 2 | 4522.678 | 4522.678 | 0.24 | 1.272 | 4521.406 |
| 348+00 | TYPE 2 | 4522.568 | 4522.568 | 0.23 | 1.226 | 4521.342 |
| 348+20 | TYPE 2 | 4522.403 | 4522.403 | 0.22 | 1.136 | 4521.267 |
| 348+40 | TYPE 2 | 4522.251 | 4522.251 | 0.21 | 1.083 | 4521.168 |
| 348+60 | TYPE 2 | 4522.167 | 4522.167 | 0.21 | 1.103 | 4521.064 |
| 348+80 | TYPE 2 | 4522.142 | 4522.142 | 0.22 | 1.166 | 4520.976 |
| 349+00 | TYPE 2 | 4522.136 | 4522.136 | 0.23 | 1.224 | 4520.912 |
| 349+20 | TYPE 2 | 4522.111 | 4522.111 | 0.24 | 1.24 | 4520.871 |
| 349+40 | TYPE 2 | 4522.06 | 4522.06 | 0.23 | 1.214 | 4520.846 |
| 349+60 | TYPE 2 | 4521.998 | 4521.998 | 0.23 | 1.183 | 4520.815 |
| 349+80 | TYPE 2 | 4521.95 | 4521.95 | 0.22 | 1.181 | 4520.769 |
| 350+00 | TYPE 2 | 4521.92 | 4521.92 | 0.23 | 1.206 | 4520.714 |
| 350+20 | TYPE 2 | 4521.876 | 4521.876 | 0.23 | 1.225 | 4520.651 |
| 350+40 | TYPE 2 | 4521.805 | 4521.805 | 0.23 | 1.229 | 4520.576 |
| 350+60 | TYPE 2 | 4521.731 | 4521.731 | 0.24 | 1.238 | 4520.493 |
| 350+80 | TYPE 2 | 4521.661 | 4521.661 | 0.24 | 1.246 | 4520.415 |
| 351+00 | TYPE 2 | 4521.575 | 4521.575 | 0.23 | 1.208 | 4520.367 |
| 351+20 | TYPE 2 | 4521.463 | 4521.463 | 0.21 | 1.106 | 4520.357 |

| MEDIAN WALL G, LENGTH = 2580' | | | | | | |
|---|---|---|---|---|---|---|
| STA. 611+20 to STA. 637+00 | | | | | | |
| I-15 CENTER LINE STATION | BARRIER SECTION | ELEVATION AT POINT A | ELEVATION AT POINT B | HORIZONTAL OFFSET FROM POINT B TO POINT C (BARRIER TOE) | HEIGHT BETWEEN POINT B AND POINT C | ELEVATION AT POINT C |
| | | FT | FT | FT | FT | FT |
| 611+20 | TYPE 2 | 4550.888 | 4550.888 | 0.22 | 1.144 | 4549.744 |
| 611+40 | TYPE 2 | 4551.281 | 4551.281 | 0.23 | 1.183 | 4550.098 |
| 611+60 | TYPE 2 | 4551.689 | 4551.689 | 0.24 | 1.235 | 4550.454 |
| 611+80 | TYPE 2 | 4552.113 | 4552.113 | 0.25 | 1.300 | 4550.813 |
| 612+00 | TYPE 2 | 4552.563 | 4552.563 | 0.26 | 1.388 | 4551.175 |
| 612+20 | TYPE 2 | 4553.034 | 4553.034 | 0.28 | 1.494 | 4551.540 |
| 612+40 | TYPE 2 | 4553.496 | 4553.496 | 0.30 | 1.584 | 4551.912 |
| 612+60 | TYPE 2 | 4553.933 | 4553.933 | 0.32 | 1.654 | 4552.279 |
| 612+80 | TYPE 2 | 4554.338 | 4554.338 | 0.33 | 1.708 | 4552.630 |
| 613+00 | TYPE 2 | 4554.705 | 4554.705 | 0.33 | 1.737 | 4552.968 |
| 613+20 | TYPE 2 | 4555.048 | 4555.048 | 0.33 | 1.750 | 4553.298 |
| 613+40 | TYPE 2 | 4555.381 | 4555.381 | 0.33 | 1.753 | 4553.628 |
| 613+60 | TYPE 2 | 4555.711 | 4555.711 | 0.33 | 1.741 | 4553.970 |
| 613+80 | TYPE 2 | 4556.037 | 4556.037 | 0.32 | 1.686 | 4554.351 |
| 614+00 | TYPE 2 | 4556.361 | 4556.361 | 0.31 | 1.618 | 4554.743 |
| 614+20 | TYPE 2 | 4556.697 | 4556.697 | 0.30 | 1.572 | 4555.125 |
| 614+40 | TYPE 2 | 4557.059 | 4557.059 | 0.30 | 1.562 | 4555.497 |
| 614+60 | TYPE 2 | 4557.424 | 4557.424 | 0.30 | 1.559 | 4555.865 |
| 614+80 | TYPE 2 | 4557.797 | 4557.797 | 0.30 | 1.577 | 4556.220 |

## NOTES:

1. SEE "ELEVATION KEY" ON SHEET "WALL A AND GENERAL NOTES" FOR LOCATION OF POINT A, POINT B AND POINT C.
2. SEE SHEET "TYPE 1A DETAILS" AND SHEET "TYPE 1B AND TYPE 2 DETAILS" FOR TYPICAL BARRIER SECTIONS.
3. MEDIAN WALL G IS CONTINUED ON SHEET "WALL G CONTINUED".

REVISIONS

| NO. | DATE | BY | REMARKS |
|---|---|---|---|

UTAH DEPARTMENT OF TRANSPORTATION
SALT LAKE CITY, UTAH
STRUCTURES DIVISION

DESIGN HCB 12/04 CHECK RH 12/04
DRAWN VHB 12/04 CHECK HCB 12/04
QUANT. HCB 12/04 CHECK VHB 01/05

APPROVAL RECOMM. DATE SENIOR DESIGN ENGR.
APPROVED FOR USE BY UDOT DATE UDOT BRIDGE ENGR.

I-15: CORRIDOR IN UTAH COUNTY
CONCRETE BARRIER-STEPPED PAVEMENT TYPE
WALL F AND WALL G

PROJECT NUMBER SP-15-6(52)241

UTAH
COUNTY

R-449
DRG. NO.

SHT. 4 OF 9

# NOTES:

1. SEE "ELEVATION KEY" ON SHEET "WALL A AND GENERAL NOTES" FOR LOCATION OF POINT A, POINT B AND POINT C.

2. SEE SHEET "TYPE 1A DETAILS" AND SHEET "TYPE 1B AND TYPE 2 DETAILS" FOR TYPICAL BARRIER SECTIONS.

## MEDIAN WALL G CONTINUED

| I-15 CENTER LINE STATION | BARRIER SECTION | ELEVATION AT POINT A | ELEVATION AT POINT B | HORIZONTAL OFFSET FROM POINT B TO POINT C (BARRIER TOE) | HEIGHT BETWEEN POINT B AND POINT C | ELEVATION AT POINT C |
|---|---|---|---|---|---|---|
| | | FT | FT | FT | FT | FT |
| 615+00 | TYPE 2 | 4558.188 | 4558.188 | 0.31 | 1.619 | 4556.569 |
| 615+20 | TYPE 2 | 4558.583 | 4558.583 | 0.31 | 1.620 | 4556.963 |
| 615+40 | TYPE 2 | 4558.959 | 4558.959 | 0.30 | 1.568 | 4557.391 |
| 615+60 | TYPE 2 | 4559.328 | 4559.328 | 0.28 | 1.495 | 4557.833 |
| 615+80 | TYPE 2 | 4559.709 | 4559.709 | 0.27 | 1.432 | 4558.277 |
| 616+00 | TYPE 2 | 4560.103 | 4560.103 | 0.27 | 1.408 | 4558.695 |
| 616+20 | TYPE 2 | 4560.521 | 4560.521 | 0.27 | 1.418 | 4559.103 |
| 616+40 | TYPE 2 | 4560.952 | 4560.952 | 0.27 | 1.434 | 4559.518 |
| 616+60 | TYPE 2 | 4561.341 | 4561.341 | 0.27 | 1.417 | 4559.924 |
| 616+80 | TYPE 2 | 4561.704 | 4561.704 | 0.27 | 1.408 | 4560.296 |
| 617+00 | TYPE 2 | 4562.061 | 4562.061 | 0.28 | 1.466 | 4560.595 |
| 617+20 | TYPE 2 | 4562.398 | 4562.398 | 0.28 | 1.460 | 4560.938 |
| 617+40 | TYPE 2 | 4562.733 | 4562.733 | 0.27 | 1.440 | 4561.293 |
| 617+60 | TYPE 2 | 4563.083 | 4563.083 | 0.27 | 1.430 | 4561.653 |
| 617+80 | TYPE 2 | 4563.429 | 4563.429 | 0.27 | 1.409 | 4562.020 |
| 618+00 | TYPE 2 | 4563.799 | 4563.799 | 0.27 | 1.437 | 4562.362 |
| 618+20 | TYPE 2 | 4564.166 | 4564.166 | 0.28 | 1.454 | 4562.712 |
| 618+40 | TYPE 2 | 4564.521 | 4564.521 | 0.27 | 1.436 | 4563.085 |
| 618+60 | TYPE 2 | 4564.884 | 4564.884 | 0.28 | 1.447 | 4563.437 |
| 618+80 | TYPE 2 | 4565.255 | 4565.255 | 0.27 | 1.430 | 4563.825 |
| 619+00 | TYPE 2 | 4565.646 | 4565.646 | 0.27 | 1.425 | 4564.221 |
| 619+20 | TYPE 2 | 4566.033 | 4566.033 | 0.28 | 1.482 | 4564.551 |
| 619+40 | TYPE 2 | 4566.409 | 4566.409 | 0.29 | 1.513 | 4564.896 |
| 619+60 | TYPE 2 | 4566.821 | 4566.821 | 0.30 | 1.569 | 4565.252 |
| 619+80 | TYPE 2 | 4567.230 | 4567.230 | 0.31 | 1.605 | 4565.625 |
| 620+00 | TYPE 2 | 4567.656 | 4567.656 | 0.31 | 1.608 | 4566.048 |
| 620+20 | TYPE 2 | 4568.067 | 4568.067 | 0.31 | 1.640 | 4566.427 |
| 620+40 | TYPE 2 | 4568.464 | 4568.464 | 0.32 | 1.681 | 4566.783 |
| 620+60 | TYPE 2 | 4568.844 | 4568.844 | 0.32 | 1.687 | 4567.157 |
| 620+80 | TYPE 2 | 4569.221 | 4569.221 | 0.31 | 1.620 | 4567.601 |
| 621+00 | TYPE 2 | 4569.632 | 4569.632 | 0.31 | 1.614 | 4568.018 |
| 621+20 | TYPE 2 | 4570.050 | 4570.050 | 0.31 | 1.614 | 4568.436 |
| 621+40 | TYPE 2 | 4570.460 | 4570.460 | 0.30 | 1.569 | 4568.891 |
| 621+60 | TYPE 2 | 4570.818 | 4570.818 | 0.30 | 1.561 | 4569.257 |
| 621+80 | TYPE 2 | 4571.195 | 4571.195 | 0.30 | 1.581 | 4569.614 |
| 622+00 | TYPE 2 | 4571.563 | 4571.563 | 0.30 | 1.557 | 4570.006 |
| 622+20 | TYPE 2 | 4571.930 | 4571.930 | 0.29 | 1.537 | 4570.393 |
| 622+40 | TYPE 2 | 4572.263 | 4572.263 | 0.28 | 1.473 | 4570.790 |
| 622+60 | TYPE 2 | 4572.604 | 4572.604 | 0.27 | 1.401 | 4571.203 |
| 622+80 | TYPE 2 | 4573.020 | 4573.020 | 0.26 | 1.379 | 4571.641 |
| 623+00 | TYPE 2 | 4573.393 | 4573.393 | 0.27 | 1.408 | 4571.985 |
| 623+20 | TYPE 2 | 4573.753 | 4573.753 | 0.27 | 1.400 | 4572.353 |
| 623+40 | TYPE 2 | 4574.193 | 4574.193 | 0.28 | 1.446 | 4572.747 |
| 623+60 | TYPE 2 | 4574.610 | 4574.610 | 0.28 | 1.479 | 4573.131 |
| 623+80 | TYPE 2 | 4575.036 | 4575.036 | 0.30 | 1.578 | 4573.458 |
| 624+00 | TYPE 2 | 4575.442 | 4575.442 | 0.31 | 1.640 | 4573.802 |

## MEDIAN WALL G CONTINUED

| I-15 CENTER LINE STATION | BARRIER SECTION | ELEVATION AT POINT A | ELEVATION AT POINT B | HORIZONTAL OFFSET FROM POINT B TO POINT C (BARRIER TOE) | HEIGHT BETWEEN POINT B AND POINT C | ELEVATION AT POINT C |
|---|---|---|---|---|---|---|
| | | FT | FT | FT | FT | FT |
| 624+20 | TYPE 2 | 4575.828 | 4575.828 | 0.32 | 1.656 | 4574.172 |
| 624+40 | TYPE 2 | 4576.214 | 4576.214 | 0.31 | 1.641 | 4574.573 |
| 624+60 | TYPE 2 | 4576.619 | 4576.619 | 0.31 | 1.629 | 4574.990 |
| 624+80 | TYPE 2 | 4577.034 | 4577.034 | 0.31 | 1.633 | 4575.401 |
| 625+00 | TYPE 2 | 4577.398 | 4577.398 | 0.31 | 1.609 | 4575.789 |
| 625+20 | TYPE 2 | 4577.742 | 4577.742 | 0.30 | 1.552 | 4576.190 |
| 625+40 | TYPE 2 | 4578.101 | 4578.101 | 0.29 | 1.505 | 4576.596 |
| 625+60 | TYPE 2 | 4578.495 | 4578.495 | 0.29 | 1.514 | 4576.981 |
| 625+80 | TYPE 2 | 4578.888 | 4578.888 | 0.29 | 1.546 | 4577.342 |
| 626+00 | TYPE 2 | 4579.265 | 4579.265 | 0.28 | 1.492 | 4577.773 |
| 626+20 | TYPE 2 | 4579.614 | 4579.614 | 0.27 | 1.415 | 4578.199 |
| 626+40 | TYPE 2 | 4580.000 | 4580.000 | 0.27 | 1.443 | 4578.557 |
| 626+60 | TYPE 2 | 4580.406 | 4580.406 | 0.29 | 1.500 | 4578.906 |
| 626+80 | TYPE 2 | 4580.829 | 4580.829 | 0.30 | 1.574 | 4579.255 |
| 627+00 | TYPE 2 | 4581.263 | 4581.263 | 0.31 | 1.647 | 4579.616 |
| 627+20 | TYPE 2 | 4581.704 | 4581.704 | 0.33 | 1.714 | 4579.990 |
| 627+40 | TYPE 2 | 4582.110 | 4582.110 | 0.34 | 1.767 | 4580.343 |
| 627+60 | TYPE 2 | 4582.496 | 4582.496 | 0.35 | 1.817 | 4580.679 |
| 627+80 | TYPE 2 | 4582.881 | 4582.881 | 0.35 | 1.824 | 4581.057 |
| 628+00 | TYPE 2 | 4583.259 | 4583.259 | 0.35 | 1.813 | 4581.446 |
| 628+20 | TYPE 2 | 4583.623 | 4583.623 | 0.34 | 1.803 | 4581.820 |
| 628+40 | TYPE 2 | 4583.994 | 4583.994 | 0.34 | 1.793 | 4582.201 |
| 628+60 | TYPE 2 | 4584.397 | 4584.397 | 0.34 | 1.806 | 4582.591 |
| 628+80 | TYPE 2 | 4584.792 | 4584.792 | 0.35 | 1.827 | 4582.965 |
| 629+00 | TYPE 2 | 4585.185 | 4585.185 | 0.35 | 1.856 | 4583.329 |
| 629+20 | TYPE 2 | 4585.586 | 4585.586 | 0.35 | 1.855 | 4583.731 |
| 629+40 | TYPE 2 | 4585.980 | 4585.980 | 0.35 | 1.813 | 4584.167 |
| 629+60 | TYPE 2 | 4586.350 | 4586.350 | 0.34 | 1.771 | 4584.579 |
| 629+80 | TYPE 2 | 4586.692 | 4586.692 | 0.33 | 1.727 | 4584.965 |
| 630+00 | TYPE 2 | 4587.018 | 4587.018 | 0.32 | 1.687 | 4585.331 |
| 630+20 | TYPE 2 | 4587.353 | 4587.353 | 0.32 | 1.666 | 4585.687 |
| 630+40 | TYPE 2 | 4587.694 | 4587.694 | 0.32 | 1.656 | 4586.038 |
| 630+60 | TYPE 2 | 4588.034 | 4588.034 | 0.31 | 1.646 | 4586.388 |
| 630+80 | TYPE 2 | 4588.374 | 4588.374 | 0.31 | 1.637 | 4586.737 |
| 631+00 | TYPE 2 | 4588.735 | 4588.735 | 0.32 | 1.667 | 4587.068 |
| 631+20 | TYPE 2 | 4589.100 | 4589.100 | 0.33 | 1.737 | 4587.363 |
| 631+40 | TYPE 2 | 4589.421 | 4589.421 | 0.34 | 1.788 | 4587.633 |
| 631+60 | TYPE 2 | 4589.711 | 4589.711 | 0.35 | 1.817 | 4587.894 |
| 631+80 | TYPE 2 | 4589.986 | 4589.986 | 0.35 | 1.826 | 4588.160 |
| 632+00 | TYPE 2 | 4590.245 | 4590.245 | 0.34 | 1.809 | 4588.436 |
| 632+20 | TYPE 2 | 4590.479 | 4590.479 | 0.34 | 1.768 | 4588.711 |
| 632+40 | TYPE 2 | 4590.692 | 4590.692 | 0.33 | 1.713 | 4588.979 |
| 632+60 | TYPE 2 | 4590.904 | 4590.904 | 0.31 | 1.647 | 4589.257 |
| 632+80 | TYPE 2 | 4591.136 | 4591.136 | 0.30 | 1.589 | 4589.547 |
| 633+00 | TYPE 2 | 4591.382 | 4591.382 | 0.30 | 1.571 | 4589.811 |
| 633+20 | TYPE 2 | 4591.613 | 4591.613 | 0.30 | 1.564 | 4590.049 |
| 633+40 | TYPE 2 | 4591.804 | 4591.804 | 0.29 | 1.519 | 4590.285 |
| 633+60 | TYPE 2 | 4591.965 | 4591.965 | 0.28 | 1.454 | 4590.511 |
| 633+80 | TYPE 2 | 4592.125 | 4592.125 | 0.27 | 1.403 | 4590.722 |
| 634+00 | TYPE 2 | 4592.302 | 4592.302 | 0.26 | 1.376 | 4590.926 |
| 634+20 | TYPE 2 | 4592.480 | 4592.480 | 0.26 | 1.351 | 4591.129 |
| 634+40 | TYPE 2 | 4592.650 | 4592.650 | 0.25 | 1.327 | 4591.323 |
| 634+60 | TYPE 2 | 4592.828 | 4592.828 | 0.26 | 1.340 | 4591.488 |
| 634+80 | TYPE 2 | 4593.005 | 4593.005 | 0.26 | 1.386 | 4591.619 |
| 635+00 | TYPE 2 | 4593.157 | 4593.157 | 0.27 | 1.442 | 4591.715 |
| 635+20 | TYPE 2 | 4593.287 | 4593.287 | 0.29 | 1.501 | 4591.786 |
| 635+40 | TYPE 2 | 4593.416 | 4593.416 | 0.30 | 1.552 | 4591.864 |
| 635+60 | TYPE 2 | 4593.567 | 4593.567 | 0.30 | 1.598 | 4591.969 |
| 635+80 | TYPE 2 | 4593.730 | 4593.730 | 0.31 | 1.621 | 4592.109 |
| 636+00 | TYPE 2 | 4593.865 | 4593.865 | 0.30 | 1.594 | 4592.271 |
| 636+20 | TYPE 2 | 4593.953 | 4593.953 | 0.29 | 1.527 | 4592.426 |
| 636+40 | TYPE 2 | 4594.004 | 4594.004 | 0.27 | 1.422 | 4592.582 |
| 636+60 | TYPE 2 | 4594.045 | 4594.045 | 0.25 | 1.289 | 4592.756 |
| 636+80 | TYPE 2 | 4594.098 | 4594.098 | 0.22 | 1.166 | 4592.932 |
| 637+00 | TYPE 2 | 4594.166 | 4594.166 | 0.21 | 1.081 | 4593.085 |

REVISIONS

| NO. | DATE | BY | REMARKS |
|---|---|---|---|

UTAH DEPARTMENT OF TRANSPORTATION
SALT LAKE CITY, UTAH
STRUCTURES DIVISION

DESIGN HCB 12/04 CHECK RH 12/04
DRAWN VHB 12/04 CHECK HCB 12/04
QUANT. HCB 12/04 CHECK VHB 01/05

APPROVAL RECOMM. DATE SENIOR DESIGN ENGR.
APPROVED FOR USE BY UDOT DATE UDOT BRIDGE ENGR.

I-15: CORRIDOR IN UTAH COUNTY
CONCRETE BARRIER-STEPPED PAVEMENT TYPE
WALL G CONTINUED

PROJECT NUMBER SP-15-6(52)241

UTAH
COUNTY

R-449
DRG. NO.

SHT. 5 OF 9

| MEDIAN WALL I, LENGTH = 80' | | | | | | |
|---|---|---|---|---|---|---|
| STA. 760+20 TO 761+00 | | | | | | |
| I-15 CENTER LINE STATION | BARRIER SECTION | ELEVATION AT POINT A | ELEVATION AT POINT B | HORIZONTAL OFFSET FROM POINT B TO POINT C (BARRIER TOE) | HEIGHT BETWEEN POINT B AND POINT C | ELEVATION AT POINT C |
| | | FT | FT | FT | FT | FT |
| 760+20 | TYPE 2 | 4518.361 | 4518.361 | 0.22 | 1.157 | 4517.204 |
| 760+40 | TYPE 2 | 4518.123 | 4518.123 | 0.23 | 1.191 | 4516.932 |
| 760+60 | TYPE 2 | 4517.881 | 4517.881 | 0.23 | 1.210 | 4516.671 |
| 760+80 | TYPE 2 | 4517.616 | 4517.616 | 0.23 | 1.199 | 4516.417 |
| 761+00 | TYPE 2 | 4517.335 | 4517.335 | 0.22 | 1.167 | 4516.168 |

| MEDIAN WALL J, LENGTH = 580' | | | | | | |
|---|---|---|---|---|---|---|
| STA. 764+40 TO 770+20 | | | | | | |
| I-15 CENTER LINE STATION | BARRIER SECTION | ELEVATION AT POINT A | ELEVATION AT POINT B | HORIZONTAL OFFSET FROM POINT B TO POINT C (BARRIER TOE) | HEIGHT BETWEEN POINT B AND POINT C | ELEVATION AT POINT C |
| | | FT | FT | FT | FT | FT |
| 764+40 | TYPE 2 | 4513.058 | 4513.058 | 0.22 | 1.157 | 4511.901 |
| 764+60 | TYPE 2 | 4512.835 | 4512.835 | 0.23 | 1.190 | 4511.645 |
| 764+80 | TYPE 2 | 4512.606 | 4512.606 | 0.23 | 1.210 | 4511.396 |
| 765+00 | TYPE 2 | 4512.366 | 4512.366 | 0.23 | 1.222 | 4511.144 |
| 765+20 | TYPE 2 | 4512.127 | 4512.127 | 0.23 | 1.230 | 4510.897 |
| 765+40 | TYPE 2 | 4511.916 | 4511.916 | 0.24 | 1.256 | 4510.660 |
| 765+60 | TYPE 2 | 4511.736 | 4511.736 | 0.24 | 1.283 | 4510.453 |
| 765+80 | TYPE 2 | 4511.558 | 4511.558 | 0.24 | 1.279 | 4510.279 |
| 766+00 | TYPE 2 | 4511.391 | 4511.391 | 0.24 | 1.267 | 4510.124 |
| 766+20 | TYPE 2 | 4511.242 | 4511.242 | 0.24 | 1.262 | 4509.980 |
| 766+40 | TYPE 2 | 4511.111 | 4511.111 | 0.24 | 1.267 | 4509.844 |
| 766+60 | TYPE 2 | 4511.011 | 4511.011 | 0.25 | 1.303 | 4509.708 |
| 766+80 | TYPE 2 | 4510.939 | 4510.939 | 0.26 | 1.354 | 4509.585 |
| 767+00 | TYPE 2 | 4510.881 | 4510.881 | 0.26 | 1.384 | 4509.497 |
| 767+20 | TYPE 2 | 4510.825 | 4510.825 | 0.26 | 1.387 | 4509.438 |
| 767+40 | TYPE 2 | 4510.770 | 4510.770 | 0.26 | 1.365 | 4509.405 |
| 767+60 | TYPE 2 | 4510.724 | 4510.724 | 0.26 | 1.340 | 4509.384 |
| 767+80 | TYPE 2 | 4510.678 | 4510.678 | 0.25 | 1.308 | 4509.370 |
| 768+00 | TYPE 2 | 4510.663 | 4510.663 | 0.25 | 1.300 | 4509.363 |
| 768+20 | TYPE 2 | 4510.677 | 4510.677 | 0.25 | 1.323 | 4509.354 |
| 768+40 | TYPE 2 | 4510.694 | 4510.694 | 0.26 | 1.342 | 4509.352 |
| 768+60 | TYPE 2 | 4510.705 | 4510.705 | 0.26 | 1.339 | 4509.366 |
| 768+80 | TYPE 2 | 4510.727 | 4510.727 | 0.26 | 1.357 | 4509.370 |
| 769+00 | TYPE 2 | 4510.786 | 4510.786 | 0.25 | 1.337 | 4509.449 |
| 769+20 | TYPE 2 | 4510.855 | 4510.855 | 0.25 | 1.290 | 4509.565 |
| 769+40 | TYPE 2 | 4510.926 | 4510.926 | 0.24 | 1.251 | 4509.675 |
| 769+60 | TYPE 2 | 4511.003 | 4511.003 | 0.23 | 1.215 | 4509.788 |
| 769+80 | TYPE 2 | 4511.087 | 4511.087 | 0.23 | 1.187 | 4509.900 |
| 770+00 | TYPE 2 | 4511.161 | 4511.161 | 0.22 | 1.167 | 4509.994 |
| 770+20 | TYPE 2 | 4511.222 | 4511.222 | 0.21 | 1.099 | 4510.123 |

DGN File: N:\Projects\4433.04\Sheet.Files\Structures\medianwall\4433.medwaltable-hkl.06.dgn
05-MAY-2005

| MEDIAN WALL L, LENGTH = 200' | | | | | | |
|---|---|---|---|---|---|---|
| STA. 773+40 to STA. 775+40 | | | | | | |
| I-15 CENTER LINE STATION | BARRIER SECTION | ELEVATION AT POINT A | ELEVATION AT POINT B | HORIZONTAL OFFSET FROM POINT B TO POINT C (BARRIER TOE) | HEIGHT BETWEEN POINT B AND POINT C | ELEVATION AT POINT C |
| | | FT | FT | FT | FT | FT |
| 773+40 | TYPE 2 | 4512.169 | 4512.169 | 0.21 | 1.093 | 4511.076 |
| 773+60 | TYPE 2 | 4512.296 | 4512.296 | 0.22 | 1.169 | 4511.127 |
| 773+80 | TYPE 2 | 4512.422 | 4512.422 | 0.24 | 1.265 | 4511.157 |
| 774+00 | TYPE 2 | 4512.463 | 4512.463 | 0.24 | 1.262 | 4511.201 |
| 774+20 | TYPE 2 | 4512.535 | 4512.535 | 0.23 | 1.204 | 4511.331 |
| 774+40 | TYPE 2 | 4512.648 | 4512.648 | 0.23 | 1.205 | 4511.443 |
| 774+60 | TYPE 2 | 4512.730 | 4512.730 | 0.23 | 1.214 | 4511.516 |
| 774+80 | TYPE 2 | 4512.752 | 4512.752 | 0.22 | 1.144 | 4511.608 |
| 775+00 | TYPE 2 | 4512.930 | 4512.930 | 0.24 | 1.266 | 4511.664 |
| 775+20 | TYPE 2 | 4512.895 | 4512.895 | 0.22 | 1.181 | 4511.714 |
| 775+40 | TYPE 2 | 4512.963 | 4512.963 | 0.21 | 1.116 | 4511.847 |

## NOTES:

1. SEE "ELEVATION KEY" ON SHEET "WALL A AND GENERAL NOTES" FOR LOCATION OF POINT A, POINT B AND POINT C.
2. SEE SHEET "TYPE 1A DETAILS" AND SHEET "TYPE 1B AND TYPE 2 DETAILS" FOR TYPICAL BARRIER SECTIONS.

REVISIONS

| NO. | DATE | BY | REMARKS |
|---|---|---|---|

UTAH DEPARTMENT OF TRANSPORTATION
SALT LAKE CITY, UTAH
STRUCTURES DIVISION

DESIGN HCB 12/04 CHECK RH 12/04
DRAWN VHB 12/04 CHECK HCB 12/04
QUANT. HCB 12/04 CHECK VHB 01/05

APPROVAL RECOMM. DATE SENIOR DESIGN ENGR.
APPROVED FOR USE BY UDOT DATE UDOT BRIDGE ENGR.

I-15: CORRIDOR IN UTAH COUNTY
CONCRETE BARRIER-STEPPED PAVEMENT TYPE
WALL I, WALL J AND WALL L

PROJECT NUMBER SP-15-6(52)241

UTAH
COUNTY

R-449
DRG. NO.

SHT. 6 OF 9

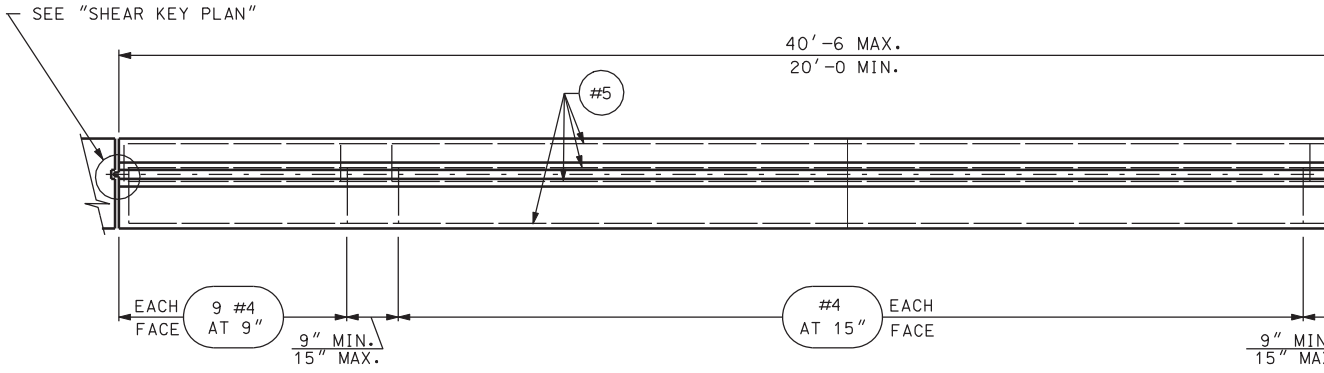


## PLAN

(TYPE 1A SHOWN, C.I.P. BARRIER SECTIONS
TYPE 1B AND TYPE 2 SIMILAR)

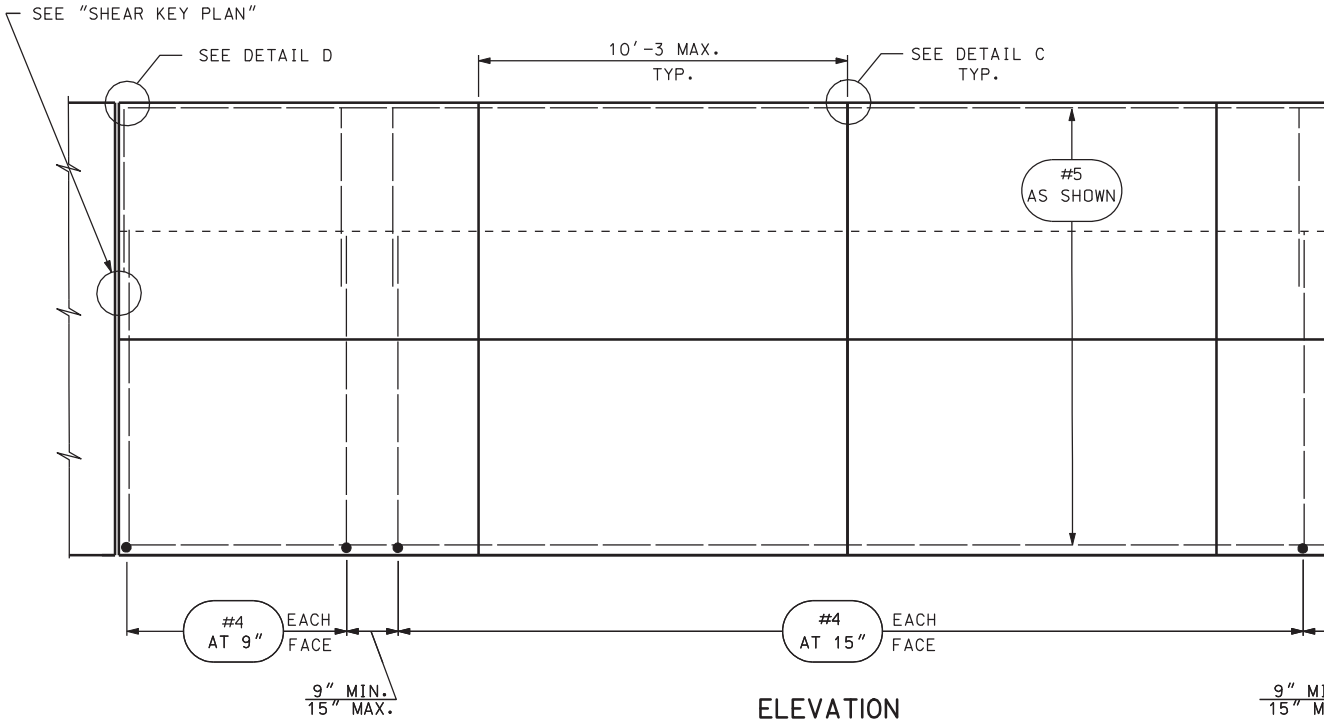


## ELEVATION

(TYPE 1A SHOWN, C.I.P. BARRIER SECTIONS
TYPE 1B AND TYPE 2 SIMILAR)

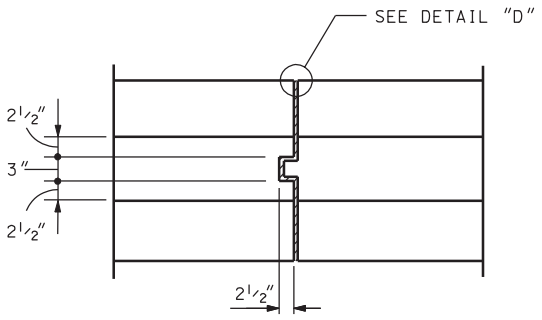


## SHEAR KEY PLAN

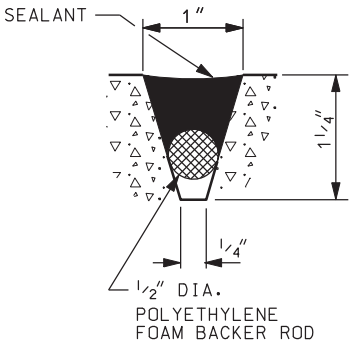


## DETAIL "C"

DGN File: N:\Projects\4433.04\Sheet.Files\Structures\medianwall\4433.medwallsecipl1.07.dgn
05-MAY-2005

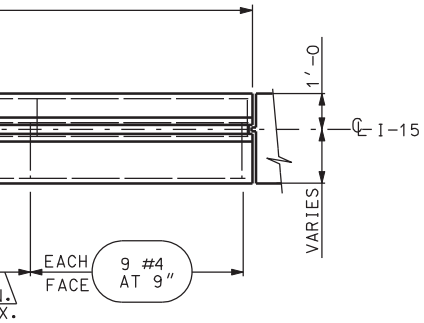


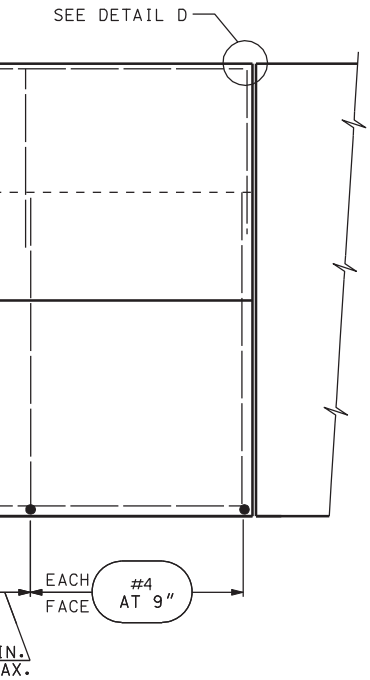


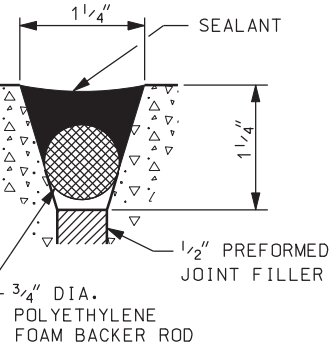


DETAIL "D"

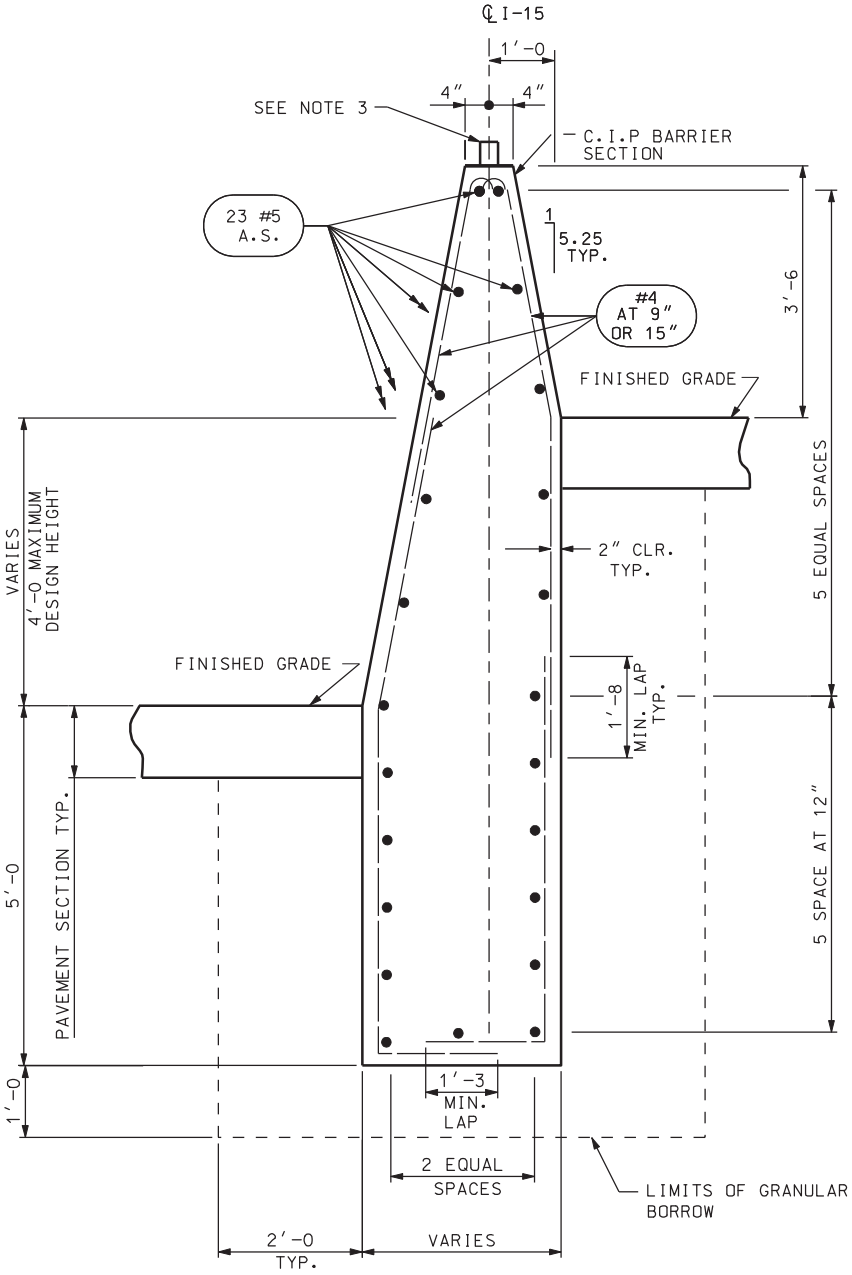


TYPE IA TYPICAL SECTION

( SEE NOTE 4)

## NOTES:

1. ALL 90° AND 180° HOOKS ARE STANDARD UNLESS NOTED OTHERWISE.
2. ALL REBAR SPACING IS MAXIMUM SPACING.
3. SEE STANDARD DRAWING GW 9 FOR DELINEATION HARDWARE. SEE STANDARD DRAWING GW 10 FOR DELINEATION SPACING.
4. REFER TO "TYPE 1B AND TYPE 2 DETAILS" SHEET, NOTE 7, FOR MODIFICATION AT DRAINAGE PIPES.

| NO. | DATE | BY | REMARKS |
|---|---|---|---|
| | | | |

REVISIONS

UTAH DEPARTMENT OF TRANSPORTATION
SALT LAKE CITY, UTAH
STRUCTURES DIVISION

DESIGN HCB 12/04 CHECK RH 12/04
DRAWN VHB 12/04 CHECK HCB 12/04
QUANT. HCB 12/04 CHECK VHB 01/05

APPROVAL RECOMM. DATE SENIOR DESIGN ENGR.
APPROVED FOR USE BY UDOT DATE UDOT BRIDGE ENGR.

I-15: CORRIDOR IN UTAH COUNTY
CONCRETE BARRIER-STEPPED PAVEMENT TYPE
TYPE 1A DETAILS

PROJECT NUMBER SP-15-6(52)241

UTAH
COUNTY

R-449
DRG. NO.

SHT. 7 OF 9

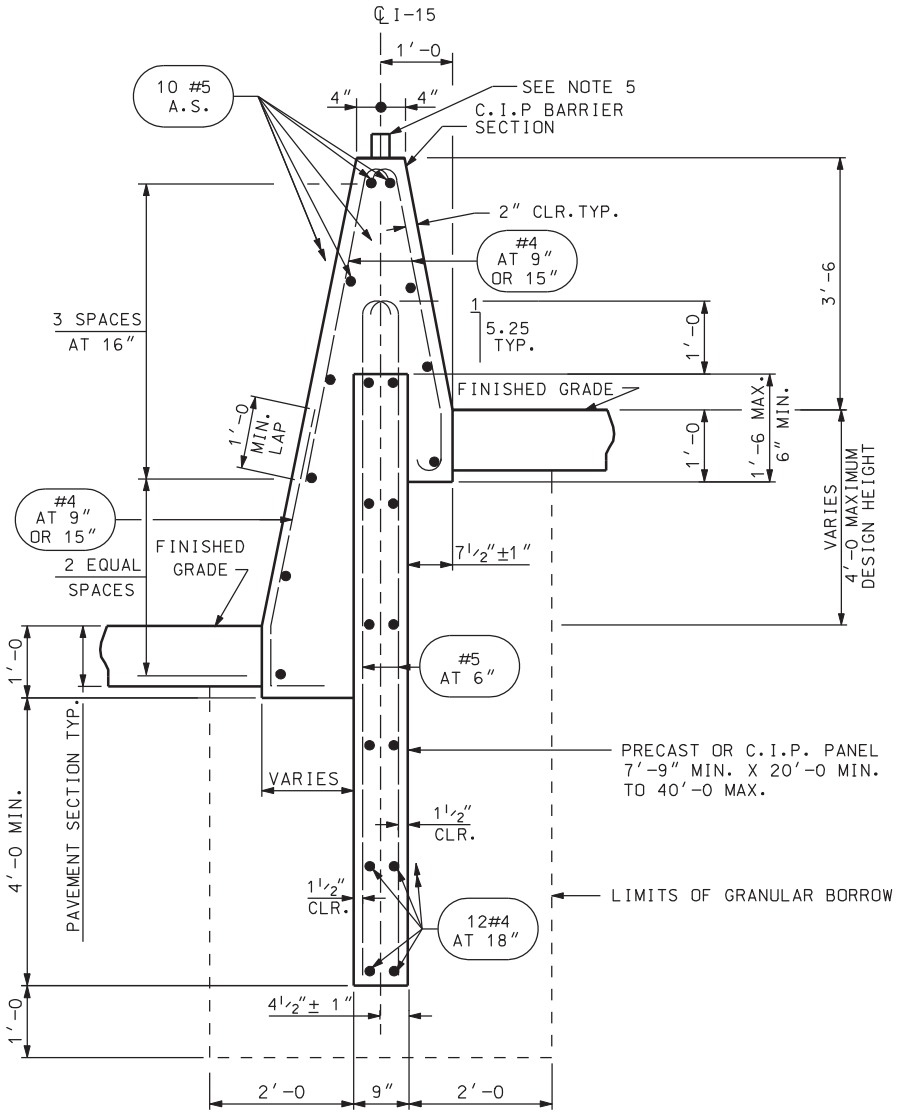


## TYPE IB TYPICAL SECTION

(SEE NOTE 7)

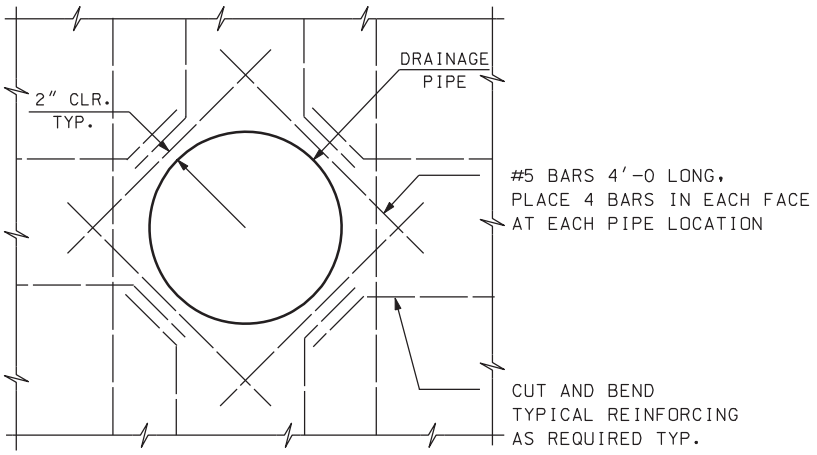


## DETAIL A

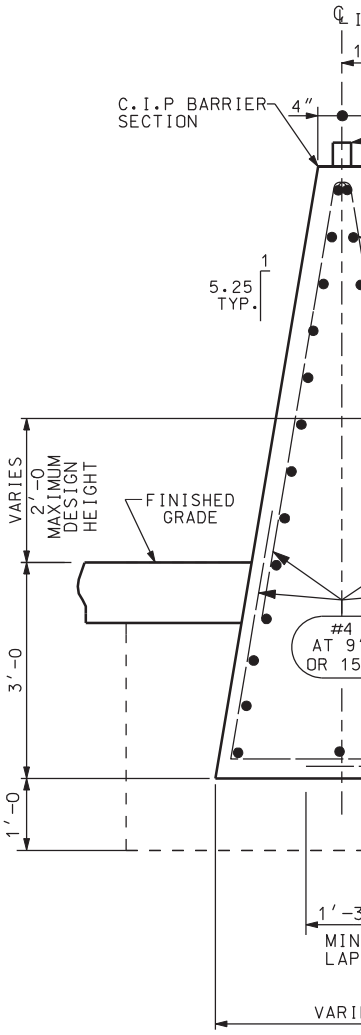


## TYPE 2 T

(SE

DGN File: N:\Projects\4433.04\Sheet.Files\Structures\medianwall\4433.medwallsec2&3pier1.08.dgn

05-MAY-2005

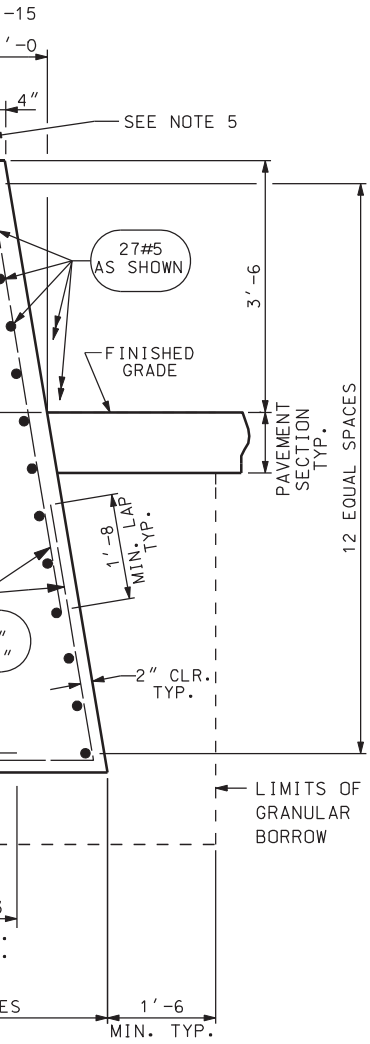


YPICAL SECTION

E NOTE 7)

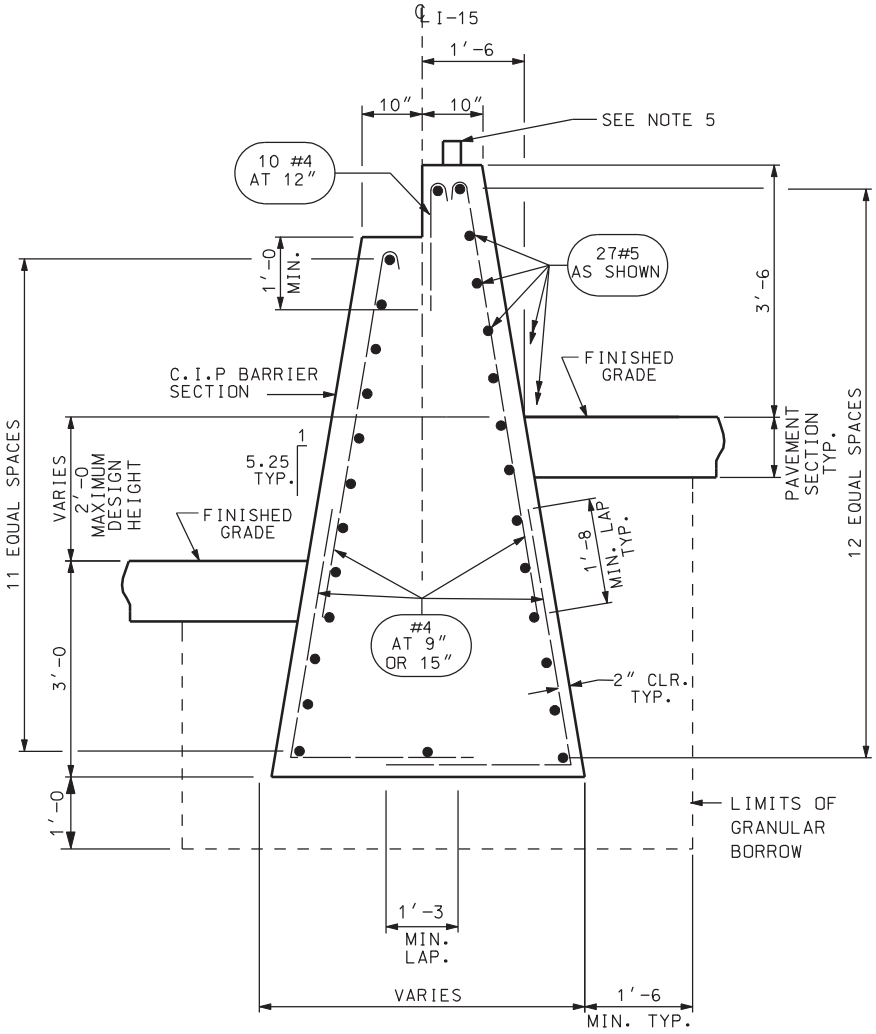


## TYPE 2 SECTION AT BRIDGE APPROACH SLAB

(SEE NOTE 7)

## NOTE:

1. ALL REBAR SPACING IS MAXIMUM SPACING.
2. ALL 90° AND 180° HOOKS ARE STANDARD UNLESS NOTED OTHERWISE.
3. SEE "TYPE 2 DETAILS" FOR SPACING LIMITATIONS ON VERTICAL #4 BARS.
4. TAPER "TYPE 2 SECTION AT BRIDGE APPROACH SLAB" TO "TYPE 2 TYPICAL SECTION" OVER A DISTANCE OF 15'-0.
5. SEE STANDARD DRAWING GW 9 FOR DELINEATION HARDWARE. SEE STANDARD DRAWING GW 10 FOR DELINEATION SPACING.
6. TYPE 2 BARRIER MAY BE SLIP FORMED.
7. USE "DETAIL A" AT LOCATIONS WHERE DRAINAGE PIPES MUST GO THROUGH THE CONCRETE BARRIER STEPPED PAVEMENT TYPE.

| NO. | DATE | BY | REMARKS |
|---|---|---|---|

REVISIONS

UTAH DEPARTMENT OF TRANSPORTATION
SALT LAKE CITY, UTAH
STRUCTURES DIVISION

DESIGN HCB 12/04 CHECK RH 12/04
DRAWN VHB 12/04 CHECK HCB 12/04
QUANT. HCB 12/04 CHECK VHB 01/05

APPROVAL RECOMM. DATE SENIOR DESIGN ENGR.
APPROVED FOR USE BY UDOT DATE UDOT BRIDGE ENGR.

I-15; CORRIDOR IN UTAH COUNTY
CONCRETE BARRIER-STEPPED PAVEMENT TYPE
TYPE 1B AND TYPE 2 DETAILS

PROJECT NUMBER SP-15-6(52)241

UTAH
COUNTY

R-449
DRG. NO.

SHT. 8 OF 9

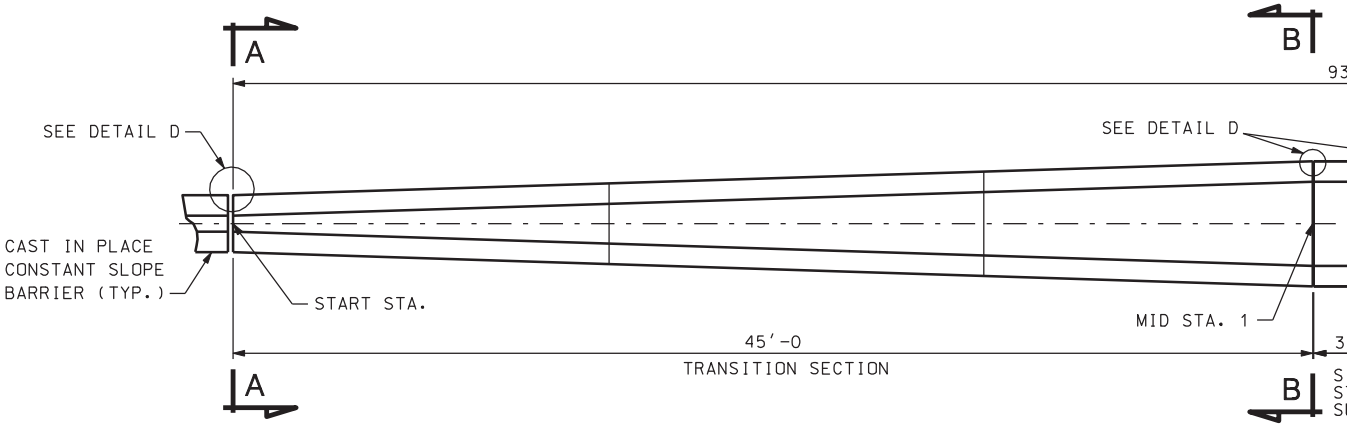


| WALL | LOCATION | START STA. | MID. STA. 1 | MID. STA. 2 |
|---|---|---|---|---|
| H | G-319A | 665+53.21 | 665+98.21 | 666+01.79 |
| K | G-319B | 772+13.21 | 772+58.21 | 772+61.79 |

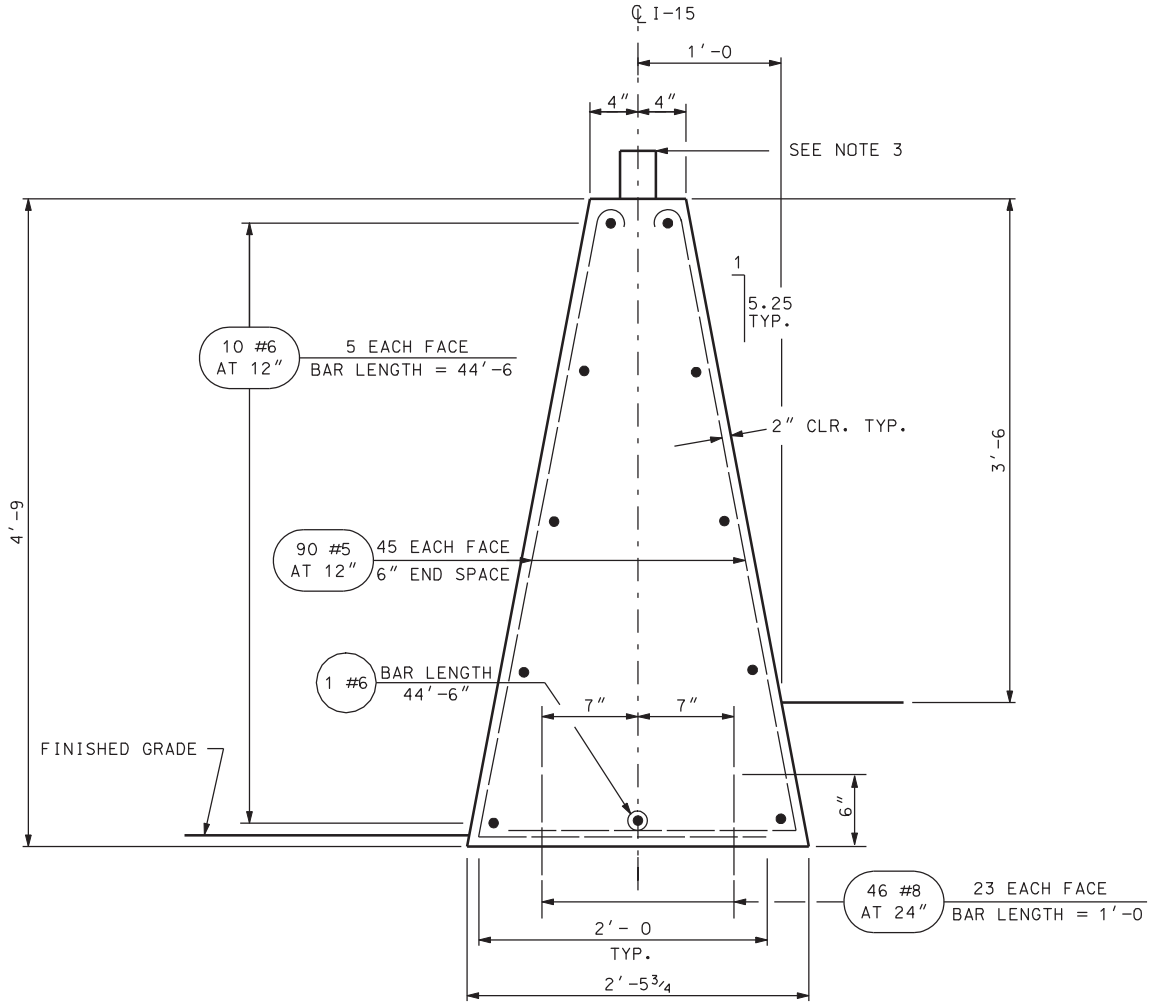


SECTION A-A

DGN File: N:\Projects\4433.04\Sheet.Files\Structures\medianwall\4433.medwalltransec.09.dgn
05-MAY-2005

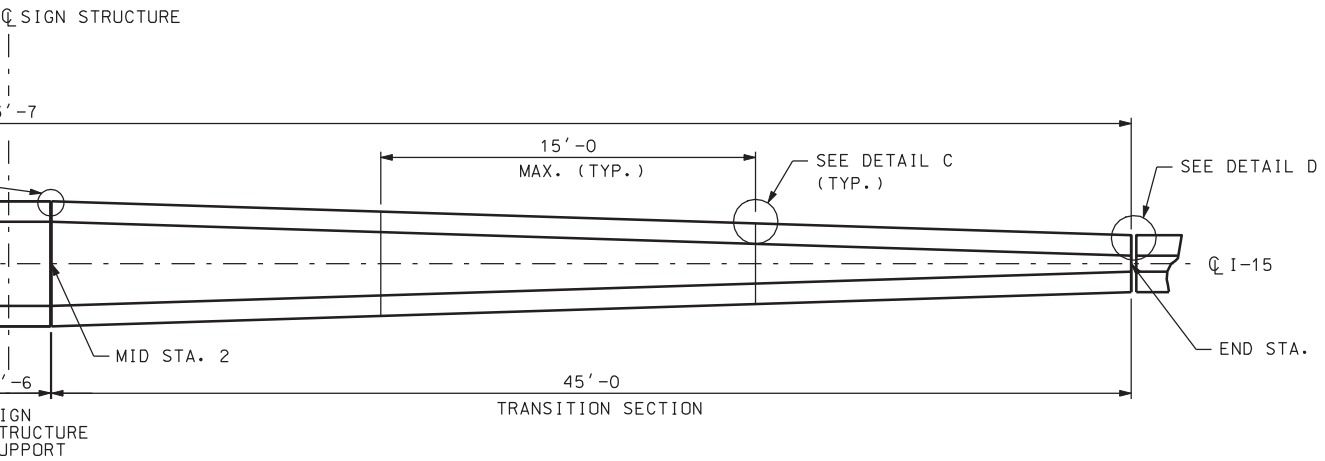


## PLAN

| | END STA. | TOTAL LENGTH |
|---|---|---|
| | 666+46.79 | 90' |
| | 773+06.79 | 90' |

## NOTES:

1. SEE SHEET "TYPE 1B AND TYPE 2 DETAILS" FOR DETAILS C AND D.
2. SEE DRG. NO. G-319 FOR 3'-6 SECTION AT SIGN STRUCTURE.
3. SEE STANDARD DRAWING GW 9 FOR DELINEATION HARDWARE. SEE STANDARD DRAWING GW 10 FOR DELINEATION SPACING.

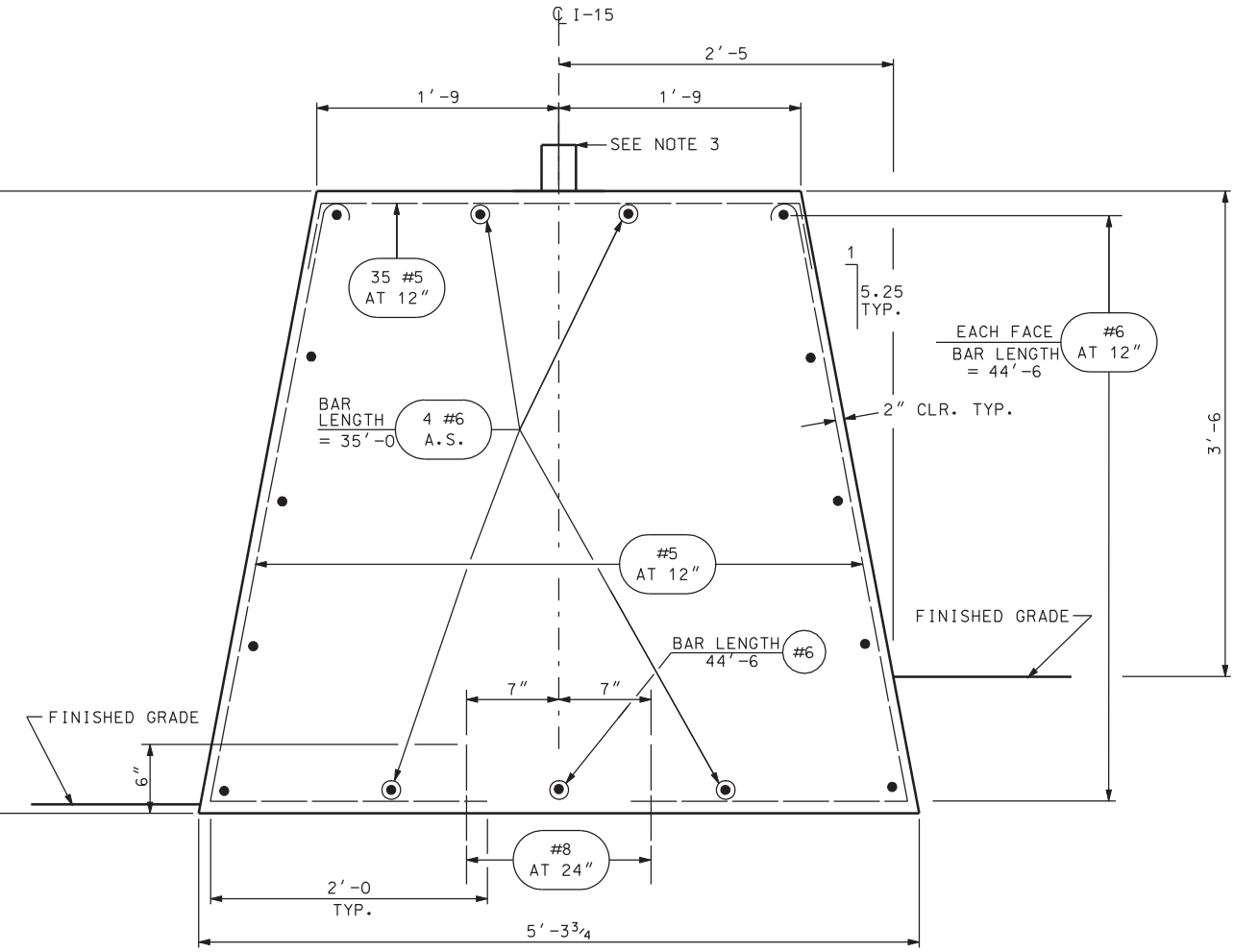


## SECTION B-B

| NO. | DATE | BY | REMARKS |
|---|---|---|---|
| | | | |

REVISIONS

UTAH DEPARTMENT OF TRANSPORTATION
SALT LAKE CITY, UTAH
STRUCTURES DIVISION

DESIGN HCB 12/04 CHECK RH 12/04
DRAWN VHB 12/04 CHECK HCB 12/04
QUANT. HCB 12/04 CHECK VHB 01/05

APPROVAL RECOMM. DATE SENIOR DESIGN ENGR.
APPROVED FOR USE BY UDOT DATE UDOT BRIDGE ENGR.

I-15: CORRIDOR IN UTAH COUNTY
CONCRETE BARRIER-STEPPED PAVEMENT TYPE
WALL H AND WALL K

PROJECT NUMBER SP-15-6(52)241

UTAH
COUNTY

R-449
DRG. NO.

SHT. 9 OF 9

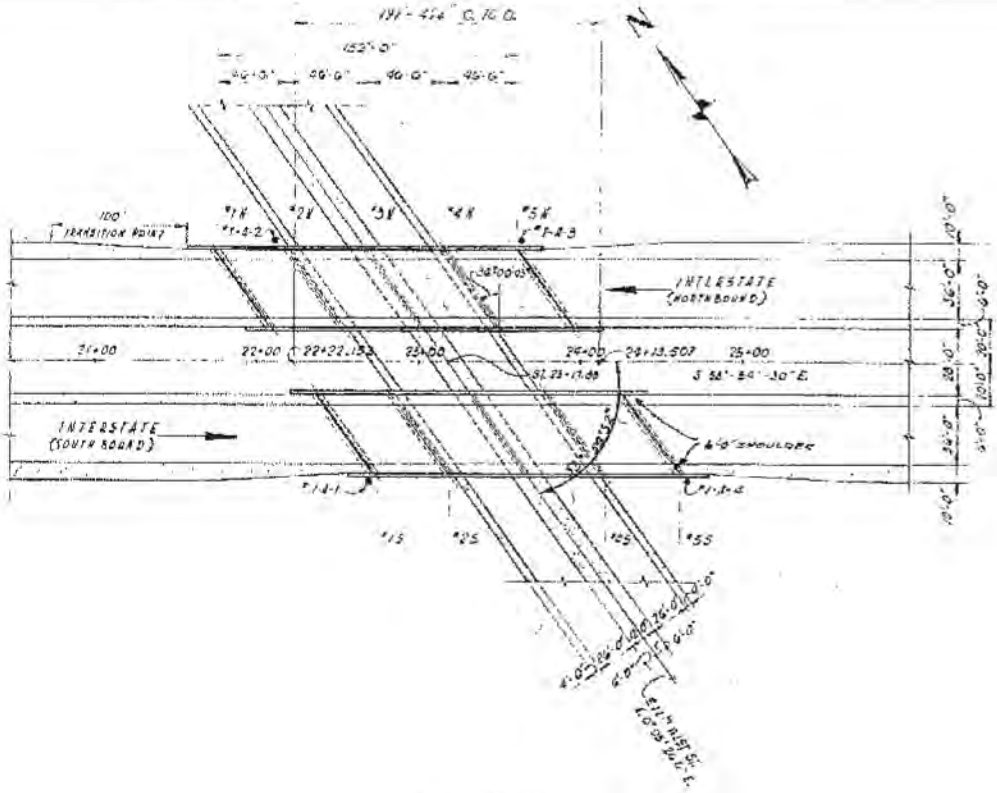


KEY PLAN
SCALE: 1" = 50'-0"

**FOR INFORMATION ONLY**

| ESTIMATE OF QUANTITIES FOR 2 STRUCTURES | | | |
|---|---|---|---|
| NO. | ITEM | QUANTITY | As Constr. |
| | EXCAV. FOR STRUCTURES (UNCLASS.) | 570 CY | 1724.5 |
| | MECHANICAL TAMPING | 64 HR. | 174.0 |
| | CLASS A CONCRETE (AE) | 1700 CY | 1670.51 |
| | REINFORCING STEEL | 282 326 LB | 287,744 |
| | STRUCTURAL STEEL | 380 188 LB | 374,901 |
| | FURN. PILE DRIVING EQUIP'T. | 1 L.S. | |
| | TEST PILE | 71 L.F. | 72.2 |
| | LOAD TESTING | 1 EACH | |
| | PILE (OTHER THAN TIMBER) | 10 845 L.F. | 8673.4 |
| | METAL RAILING (SINGLE RAIL) | 890 L.F. | 900 |
| | 3" RIGID STEEL CONDUIT | 481 L.F. | |
| | ELECTRICAL WORK BRIDGES | 1 Lump | |

**DESIGN SPECIFICATIONS** [illegible]
**CONSTRUCTION SPECIFIC** [illegible]
accordance with the Sta[illegible] Construction, 1960 Edition [illegible] of request for bids.
**LIVE LOAD:** H 20-S16-[illegible] Specifications of 1961.
**REINFORCEMENT:** All re[illegible] conforming to AASHO des[illegible] designation, M-137
**ALLOWABLE STRESSES** [illegible] 28-day in place concrete [illegible] - 3000 P.S.I. n = 10
**CONCRETE:** Class A conc[illegible]

**CHAMFERS:**
Exposed corners at [illegible]

**FOUNDATIONS:** Foundation [illegible] in construction. All pi[illegible] and pre-coring if nece[illegible]
**SHOP DRAWINGS:** All sh[illegible]

**DATUM:** All elevations [illegible]

**STRUCTURAL STEEL:** [illegible] A.S.T.M. Designation A-[illegible]

**BENCH MARK:**

02-MAY-2005 DGN Files IP PWPubns\16721\4433.C-040.01\Form\Foundcn

| FED. ROAD DIST. NO. | STATE | FED. AID PROJ. NO. | FISCAL YEAR | SHEET NO. | TOTAL SHEETS |
|---|---|---|---|---|---|
| 4 | UTAH | | | | |

9

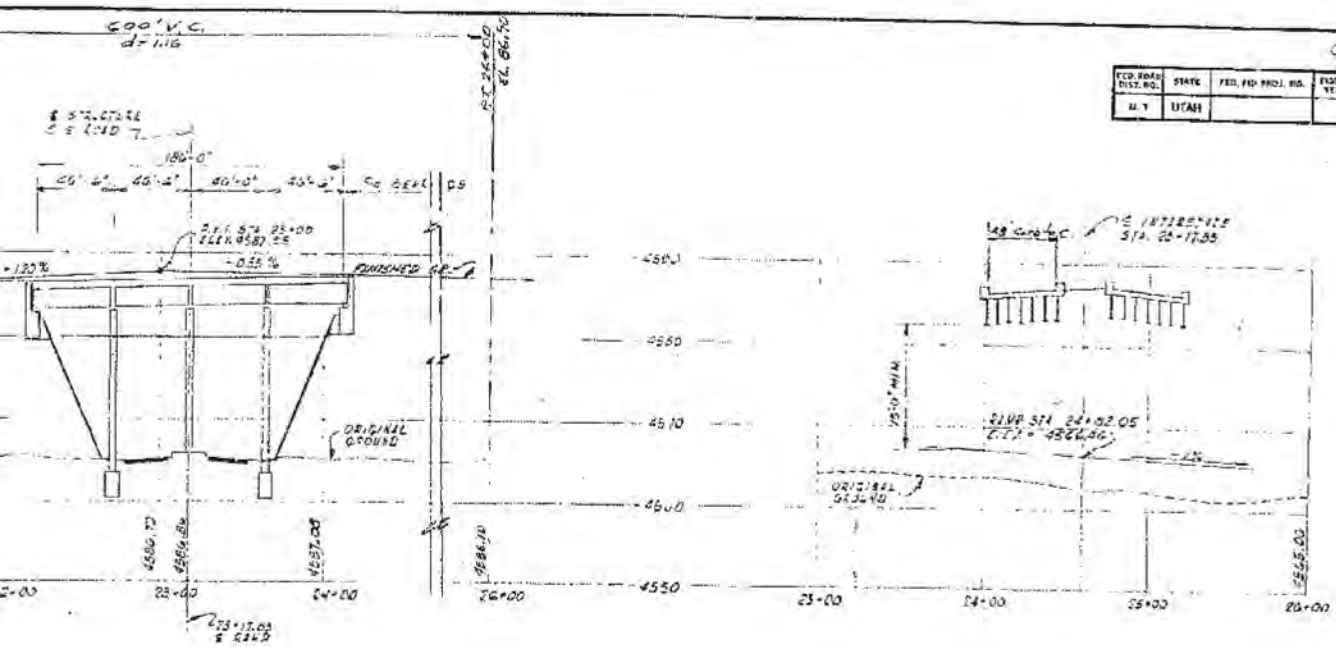


## PROFILE INTERSTATE

SCALES: 1"=50'-0" HORIZ.
1"=10'-0" VERT.

## PROFILE 11TH WEST STREET

SCALES: 1"=50'-0" HORIZ.
1"=10'-0" VERT.

## GENERAL NOTES

t A.A.S.H.O., Standard Specifications for Highway Bridges 1961 Edition
ATIONS: Materials, construction and workmanship shall be in
re Standard Specifications for Road and Bridge
and Supplements thereto which are in effect at the date

a. Interstate Alternate Loading in accordance with the A.A.S.H.O.

inforcing steel bars shall be new billet steel, intermediate grade,
signation M-31 and shall have deformations conforming to A.S.T.M.

Structural Steel - 18,000 P.S.I., reinforcing steel 20,000 P.S.I.
in compression 1,200 P.S.I. fc - Ultimate compressive stress

ete with Type II Low Alkali cement shall be used throughout.

joint filler and open joints to be beveled "¾" or rounded.

s may be altered if necessary to suit conditions encountered
es shall be driven full length using air, steam, or diesel hammer
ssary.
op drawings shall be approved before fabrication of steel.

refer to U.S.C. and G.S. Mean Sea Level Datum of 1934.

nless otherwise noted, structural steel shall conform to
, or A-36

| NO. | BY | DATE | REMARKS |
|---|---|---|---|
| | | | |

REVISIONS

### STANDARD DRAWINGS

| SHEET NUMBER | DESCRIPTION |
|---|---|
| ST-1 | RAILING DETAILS |
| ST-3 | STANDARD PILES |
| ST-5 | STANDARD LIGHTING DETAILS |
| MR-1 | METAL RAILING STD. |

### INDEX OF SHEETS

| SHEET NUMBER | DESCRIPTION |
|---|---|
| 1. | KEY PLAN & INDEX SHEET |
| 2. | DECK PLAN & ELEVATION |
| 3. | BORING LOGS |
| 4. | FOUNDATION PLAN |
| 5. | ABUTMENTS NO'S. 1-N, 1-S, 4-N & 4-S |
| 6. | BENTS NO'S. 2-N, 2-S, 3-N & 3-S |
| 7. | FRAMING PLAN |
| 8. | TRANSVERSE SECTION |
| 9. | DETAILS |
| 10-11 | REINFORCING SCHEDULE |
| 12 | SCREED ELEVATIONS |
| 12a | ELECTRICAL WORK BRIDGES |
| | |

SHEET 1 OF 12 SHEETS

## KEY PLAN & INDEX SHEET

DESIGN AND DRAWING BY
WESTERN ENGINEERS, INC. AND
EDWARDS AND KELCEY
CONSULTING ENGINEERS

SUBMITTED BY [signature] CHIEF ENGINEER
UTAH ENGR. LIC. NO. 2602

UTAH STATE ROAD COMMISSION
SALT LAKE CITY, UTAH
BRIDGE DEPARTMENT

NORTH LEHI INTERCHANGE
191'-4 1/4" O. TO O. 54" XING
STA. 23+17.830 I-15-5(19)276
LEHI-PROVO UTAH COUNTY

DRAWN BY DWS
TRACED BY RHB
CHECKED BY RK
DATE 1963
APPROVED [signature]
CHIEF BRIDGE ENGINEER

DWG. NO. C-340
STRUCTURE I-8

FINAL 2-24-64

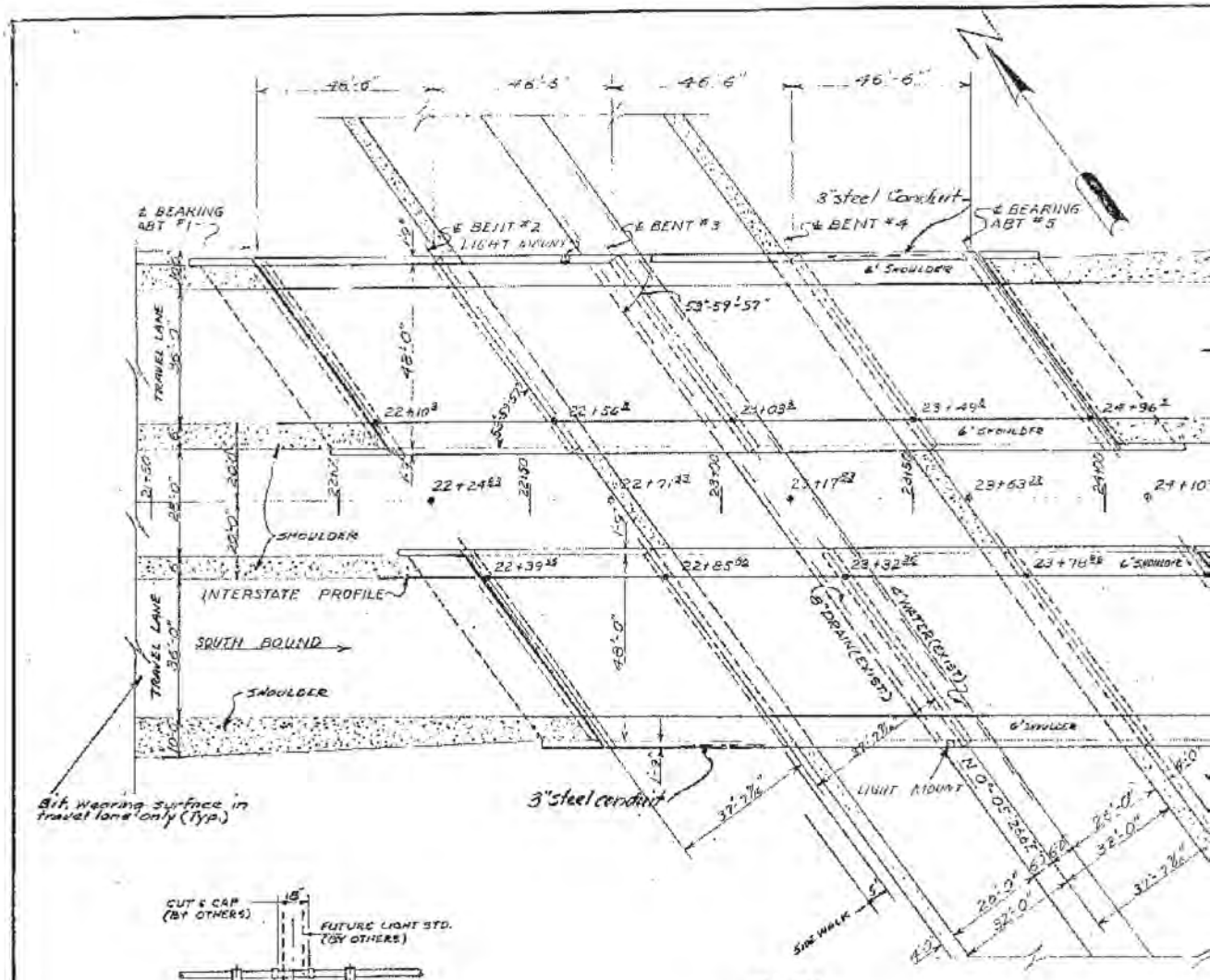


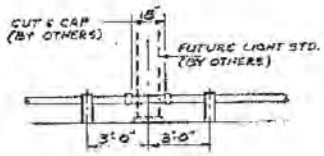


DETAIL "C"
SCALE: 1/8" = 1'-0"

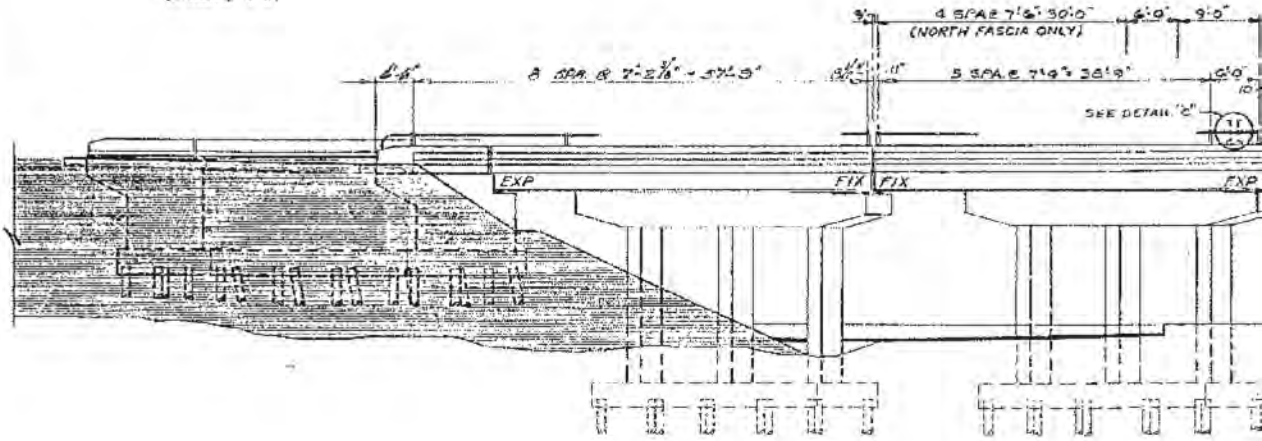


HANDRAIL SPACING

| FED. ROAD DIST. NO. | STATE | FED. AID PROJ. NO. | FISCAL YEAR | SHEET NO. | TOTAL SHEETS |
|---|---|---|---|---|---|
| U.T. | UTAH | | | 10 | |

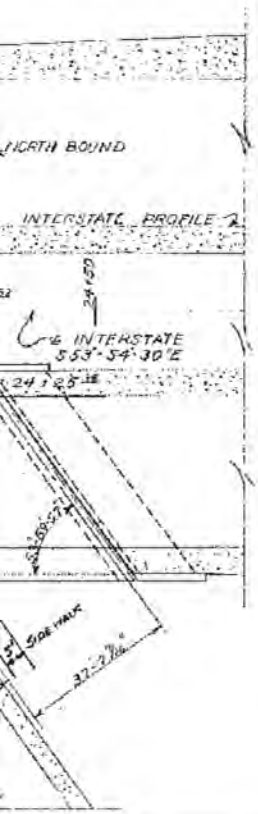


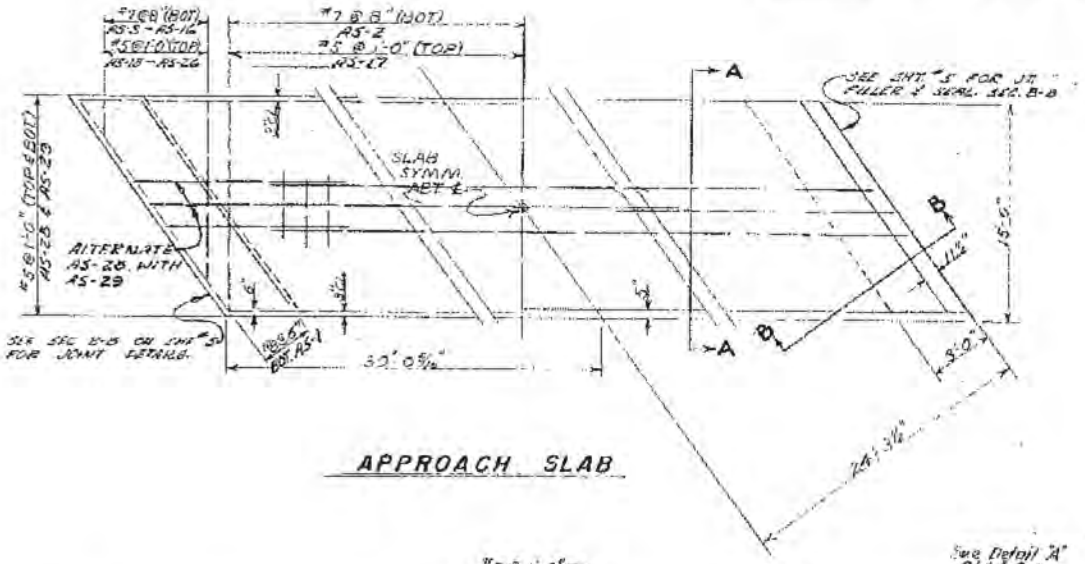


## APPROACH SLAB

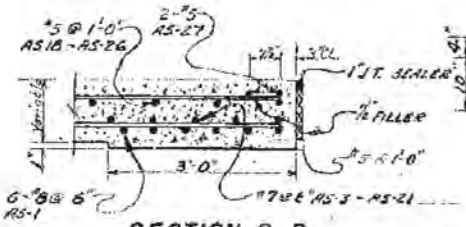


## SECTION B-B

SCALE 3/4" = 1'-0"

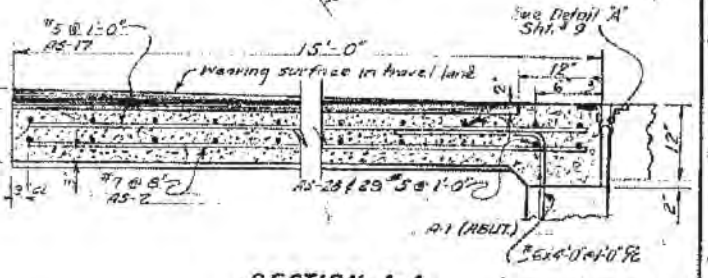


## SECTION A-A

SCALE 3/4" = 1'-0"

**FOR INFORMATION ONLY**

NOTE:
1. FOR RAILING DETAILS SEE SHEET ST-1.
2. POINTS ON RAILING MARKED "NOT BOLTED" IN ELEVATION VIEW INDICATE THAT ONE END OF THE RAIL IS TO BE LEFT LOOSE IN THE POST TO PROVIDE MOVEMENT FOR EXPANSION OR CONTRACTION.
3. FOR ACCESS ROAD, GEOMETRICS & CONTROL OF FILL SEE FOOTING & FOUNDATION PLAN.

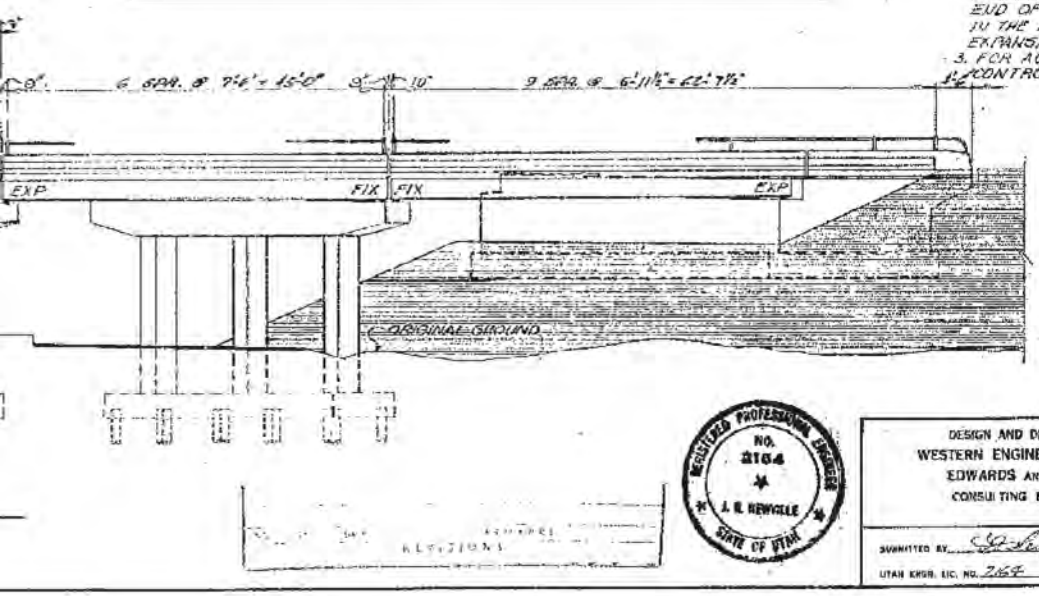


## PLAN & ELEVATION

SHEET 2 OF 12 SHEETS

UTAH STATE ROAD COMMISSION
SALT LAKE CITY, UTAH
BRIDGE DEPARTMENT

**NORTH LEHI INTERCHANGE**

191'-4 1/4" O.T.O.O. — 54" XING ℄ — 5th Contr.
STA. 23 + 17.830 — 7-15-6 (℄ 27.6)
LEHI - PROVO — UTAH COUNTY

DESIGNED BY BK & BT — SCALE AS SHOWN
DRAWN BY BW — ISSUED January 15, 1963
TRACED BY BW — APPROVED D. A. Sharpe, CHIEF BRIDGE ENGINEER
CHECKED BY BK & BT

No. — No. — Dwg. No. C-340

STRUCTURE 1-A

REGISTERED PROFESSIONAL ENGINEER NO. 2164 J. R. NEWCOLLE STATE OF UTAH

DESIGN AND DRAWING BY
WESTERN ENGINEERS, INC. AND
EDWARDS AND KELCEY
CONSULTING ENGINEERS

SUBMITTED BY J. R. Newcolle, CHIEF ENGINEER
UTAH ENGR. LIC. NO. 2164

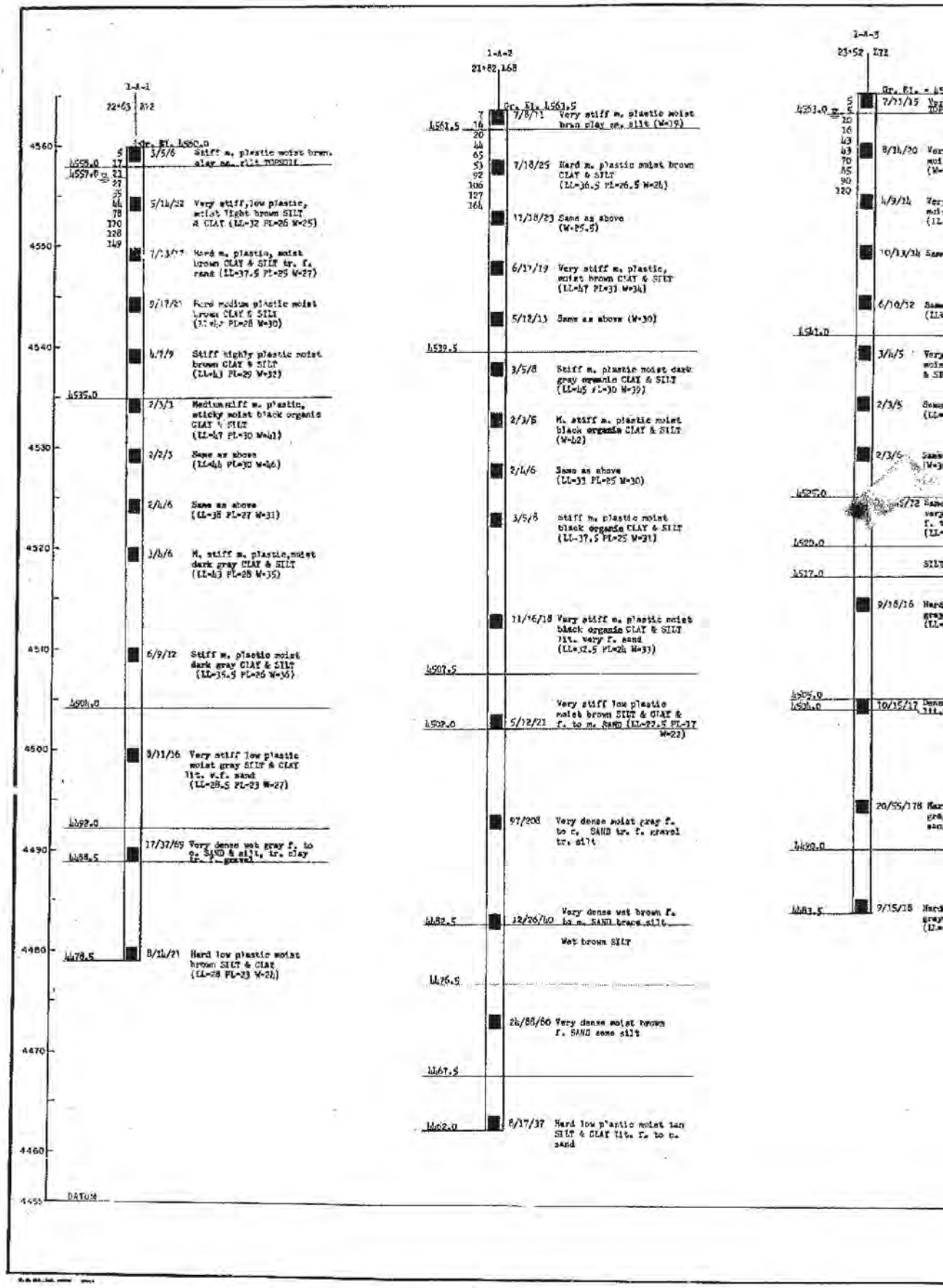
1-A-1
22+63 212
Gr. El. 1560.0
4560
5 3/5/6 Stiff m. plastic moist brown clay m. silt TOPSOIL
1559.0 17
1557.0 21
27
35
44 5/14/22 Very stiff, low plastic, moist light brown SILT & CLAY (LL=32 PL=26 W=25)
78
120
128
149
4550
7/13/21 Hard m. plastic, moist brown CLAY & SILT tr. f. sand (LL=37.5 PL=25 W=27)
9/17/21 Hard medium plastic moist brown CLAY & SILT (LL=47 PL=28 W=30)
4540
4/7/9 Stiff highly plastic moist brown CLAY & SILT (LL=43 PL=29 W=32)
1535.0
2/3/3 Medium stiff m. plastic, sticky moist black organic CLAY & SILT (LL=47 PL=30 W=41)
4530
2/2/3 Same as above (LL=44 PL=30 W=46)
2/4/6 Same as above (LL=38 PL=27 W=31)
4520
3/4/6 M. stiff m. plastic, moist dark gray CLAY & SILT (LL=43 PL=28 W=35)
4510
6/9/12 Stiff m. plastic moist dark gray CLAY & SILT (LL=35.5 PL=26 W=35)
1504.0
4500
3/11/16 Very stiff low plastic moist gray SILT & CLAY lit. v.f. sand (LL=28.5 PL=23 W=27)
1492.0
4490
1488.5
17/37/59 Very dense wet gray f. to c. SAND & silt, tr. clay tr. f. gravel
4480
1478.5
8/14/21 Hard low plastic moist brown SILT & CLAY (LL=28 PL=23 W=24)
4470
4460
4455
DATUM
1-A-2
21+82 168
Gr. El. 1561.5
7 7/8/11 Very stiff m. plastic moist brown clay m. silt (W=19)
1561.5 16
20
44
65
53 7/18/25 Hard m. plastic moist brown CLAY & SILT (LL=36.5 PL=26.5 W=24)
92
106
127
164
12/18/23 Same as above (W=25.5)
6/17/19 Very stiff m. plastic, moist brown CLAY & SILT (LL=47 PL=31 W=34)
5/12/13 Same as above (W=30)
1539.5
3/5/8 Stiff m. plastic moist dark gray organic CLAY & SILT (LL=45 PL=30 W=39)
2/3/5 M. stiff m. plastic moist black organic CLAY & SILT (W=42)
2/4/6 Same as above (LL=33 PL=25 W=30)
3/5/8 Stiff m. plastic moist black organic CLAY & SILT (LL=37.5 PL=25 W=31)
11/16/18 Very stiff m. plastic moist black organic CLAY & SILT 75% very f. sand (LL=42.5 PL=24 W=33)
1507.5
Very stiff low plastic moist brown SILT & CLAY & f. to m. SAND (LL=22.5 PL=17 W=22)
1502.0 5/12/21
97/208 Very dense moist gray f. to c. SAND tr. f. gravel tr. silt
1482.5 12/26/40 Very dense wet brown f. to m. SAND trace silt
Wet brown SILT
1476.5
24/88/80 Very dense moist brown f. SAND some silt
1467.5
1462.0 8/17/37 Hard low plastic moist tan SILT & CLAY lit. f. to c. sand
1-A-3
23+52 171
Gr. El. = 1
4561.0 5 7/11/15
10
16
43
43 8/14/20
70
85
90
120
4/9/14
10/13/24 Same
6/10/12 Same
1541.0
3/4/5
2/3/5 Same
2/3/5 Same
1525.0
5/12 Same
1520.0
1517.0
9/18/16
1505.0
1502.0 10/15/17
20/55/178
1490.0
1483.5 9/15/18

| FED. ROAD DIST. NO. | STATE | FED. AID PROJ. NO. | FISCAL YEAR | SHEET NO. | TOTAL SHEETS |
|---|---|---|---|---|---|
| U. T. | UTAH | | | | |

1-4-4

24+51.268

Gr. El. 4564.0

4562.5 — 5, 9, 17, 27, 46, 69, 88, 94, 115, 117, 120, 125

1/10/13 M. dense moist brown TOPSOIL

6/17/23 Very stiff m. plastic, moist brown CLAY & SILT tr. f. gravel (W=38)

7/17/23 Hard m. plastic moist brown CLAY & SILT (LL=38 PL=25.5 W=28)

4547.5 — 7/9/12 Same (W=36)

5/5/7 Stiff m. plastic moist gray CLAY & SILT (LL=42 PL=26.5 W=35)

4540.0

3/5/6 Stiff m. plastic moist black organic CLAY & SILT (LL=44 PL=28 W=45)

2/2/5 Same as above but soft (LL=26.5 PL=30 W=34)

1/1/4 Same as above but very soft (LL=33 PL=25 W=40)

1/3/4 Stiff low plastic moist black SILT & CLAY (LL=38 PL=25.5 W=34)

4521.0

24/24/33 Hard slight plastic moist black clayey SILT tr. f. sand (LL=29 PL=23 W=28)

4507.0

6/15/22 Hard low plastic moist brown SILT & CLAY tr. f. to m. sand

4498.0

117/95/134 Very dense moist brown f. to c. SAND and f. GRAVEL

135/103/53 Very dense moist brown f. GRAVEL and m. plastic moist brown CLAY & SILT

4480.0

4472.0 — 25/35/52 Hard low plastic moist brown SILT & CLAY lit. f. sand

4462.5 — 58/67/106 Hard non plastic moist brown SILT some f. sand (LL=25 PL=23 W=18)

## LEGEND

Boring No. — 1-4-I

Interstate Station — 22+63 — 872 — Offset

Ground Elevation — Gr. El. 4562

Ground Water Table Elevation — 4557.2

Number of Blows Used to drive casing 12 inches with 300 lb. hammer falling 2 ft. (Typical)

Strata Change Elevation (Typical) — 4550

Boring Advanced Without Casing

Location of Sample (Typical) — 4539

Bottom of Boring Elevation — 4535.5

4550 — 3, 7, 9, 12, 17, 10, 17, 22, 33, 40, 36, 43, 86, 92, 106

2/4/5 Stiff m. plastic brown clay some silt-TOPSOIL

11/13/17 M. dense wet tan m. to c. SAND, some silt, tr. f. gravel

15/21/30 Dense wet tan m. to c. SAND, some gravel

7/5/8 Stiff, low plastic brown CLAY & SILT, tr. f. sand (LL = 40, PL = 28, W = 32)

12/10/12 Very stiff, plastic gray CLAY & SILT, tr. f. sand (W = 35, qu = 17/ft )

9/12/20 Very stiff varved plastic gray silty CLAY & f. silty SAND

Number of Blows Used to drive 1-3/8" I.D. sampler with 140 lb. hammer falling 30 inches — 1st. 6 inches, 2nd. 6 inches, 3rd. 6 inches

Visual soil description for each sample and results of classification tests, if any (Typical)

ABBREVIATIONS IF AND WHEN USED:

br. = brown
gr. = gray
org. = organic
f. = fine
v. f. = very fine
m. = medium
c. = coarse
sm. = some
tr. = trace
lit. = little
LL = Liquid Limit in %
PL = Plastic Limit in %
W = Natural Moisture Content in %
qu = Unconfined compression test from pocket penetrometer in T/ft²

**FOR INFORMATION ONLY**

## BORING LOGS

SHEET 3 OF 12 SHEETS

REGISTERED PROFESSIONAL ENGINEER NO. 2164 J. R. NEWVILLE STATE OF UTAH

DESIGN AND DRAWING BY
WESTERN ENGINEERS, INC. AND
EDWARDS AND KELCEY
CONSULTING ENGINEERS

SUBMITTED BY J. R. Newville CHIEF ENGINEER
UTAH ENGR. LIC. NO. 2164

UTAH STATE ROAD COMMISSION
SALT LAKE CITY, UTAH
BRIDGE DEPARTMENT

NORTH LEHI INTERCHANGE

191'-4 1/4" O TO O — 54° XING
STA. 25+17.810 — I-15-5 (19)276
LEHI - PROVO — UTAH COUNTY

5th Contr.

DRAWN BY E.L.A. — SCALE AS SHOWN
DESIGN BY E.E.K. — DATE 3-11-63
PLACED BY E.L.A. — APPROVED
CHECKED BY E.E.K. — STATE BRIDGE ENGINEER

No. — Dwg. No. C-340

STRUCTURE 1-A

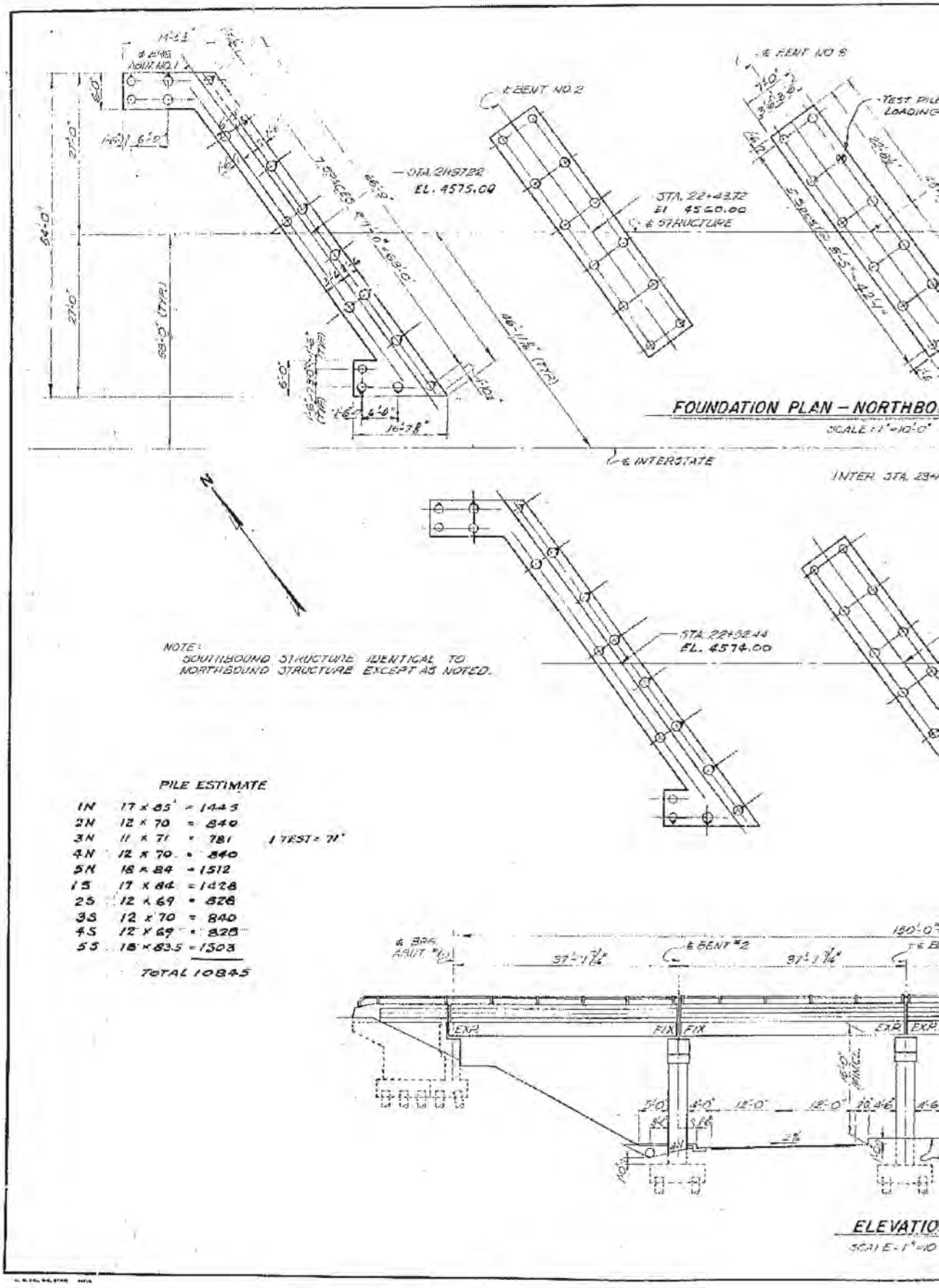


PILE ESTIMATE

| | | | |
|---|---|---|---|
| 1N | 17 × 85' | = 1445 | |
| 2N | 12 × 70 | = 840 | |
| 3N | 11 × 71 | = 781 | 1 TEST = 71' |
| 4N | 12 × 70 | = 840 | |
| 5N | 18 × 84 | = 1512 | |
| 1S | 17 × 84 | = 1428 | |
| 2S | 12 × 69 | = 828 | |
| 3S | 12 × 70 | = 840 | |
| 4S | 12 × 69 | = 828 | |
| 5S | 18 × 83.5 | = 1503 | |
| | TOTAL | 10845 | |

[redacted]

| FED. ROAD DIST. NO. | STATE | FED. AND PROJ. NO. | FISCAL YEAR | SHEET NO. | TOTAL SHEETS |
|---|---|---|---|---|---|
| U-2 | UTAH | | | | 12 |

NOTE:

1. BENT NO. 3 HAS TYP. DIMENSIONS & PILE LAYOUT FOR BENTS 2 & 4. ALL PILES ARE EMBEDED 1'-0" INTO PILE CAP.
2. MAX. PILE LOAD @ BENTS 50 TON, @ ABUT. 45 TON.
3. THE PILE TIP ELEV., AS VERIFIED BY THE RESULTS OF THE PILE LOAD TEST, SHALL CONSTITUTE THE MIN. REQ'D. PILE PENETRATION. ALL SUBSEQUENT PILES @ THE PIER & ABUT. LOCATIONS SHALL BE DRIVEN TO THE ESTABLISHED TIP ELEV. OR BELOW.
4. FOR ESTIMATING PURPOSES PILE TIP ELEV. = 4490.
5. ⊙ INDICATES 1:4 BATTER IN DIRECTION OF ARROW.
   ⊗ INDICATES TEST PILES.
   INDICATES TEST PILE & LOADING TEST
6. PILE DESIGN LOAD = 50 TON

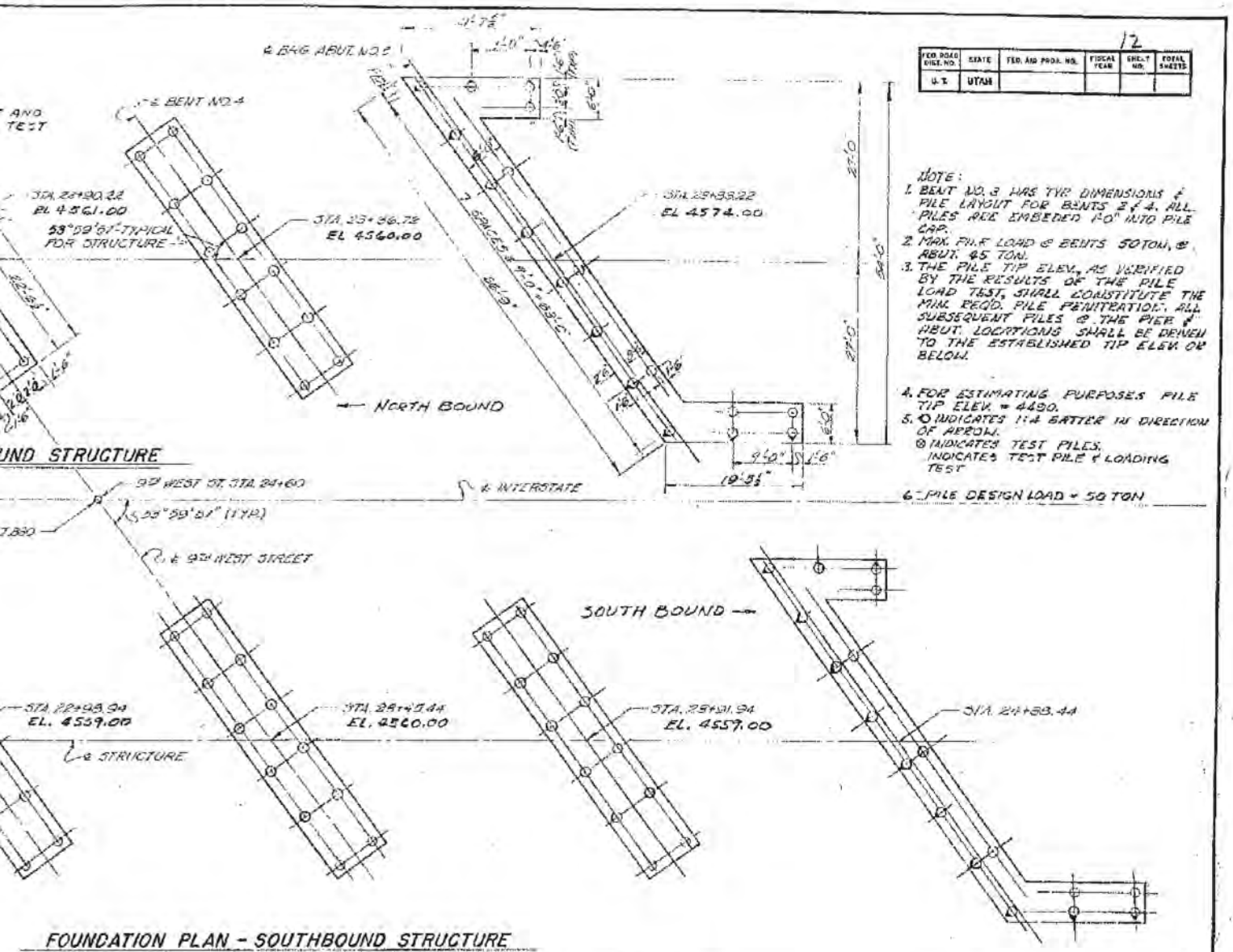


FOUNDATION PLAN - SOUTHBOUND STRUCTURE

SCALE: 1" = 10'-0"

**FOR INFORMATION ONLY**

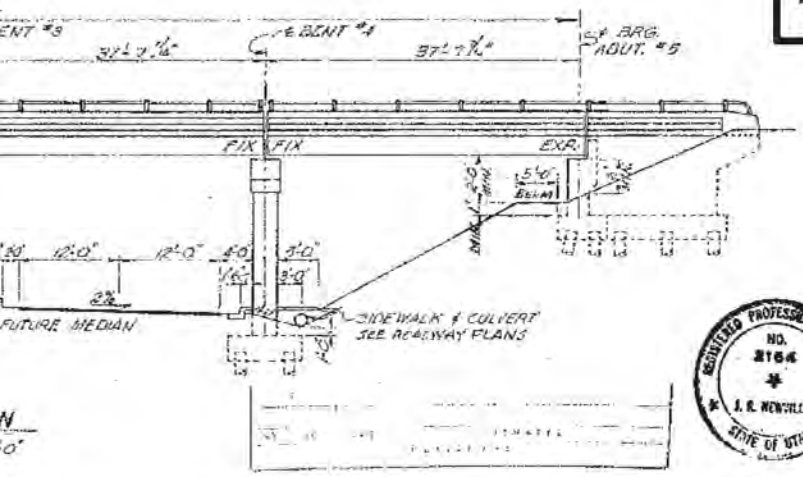


FOUNDATION PLAN

REGISTERED PROFESSIONAL ENGINEER NO. 2164 J. R. NEWVILLE STATE OF UTAH

DESIGN AND DRAWING BY
WESTERN ENGINEERS, INC. AND
EDWARDS AND KELCEY
CONSULTING ENGINEERS

SUBMITTED BY J. R. Newville CHIEF ENGINEER
UTAH ENGR. LIC. NO. 2164

SHEET 4 OF 12 SHEETS

UTAH STATE ROAD COMMISSION
SALT LAKE CITY, UTAH
BRIDGE DEPARTMENT

NORTH LEHI INTERCHANGE
191'-4½" O. TO O. 54° XING ∠
STA. 23 + 12.830 I-15-6(10)296
LEHI - PROVO UTAH COUNTY

DESIGNED BY B.R. BITNER SCALE AS SHOWN
DRAWN BY C.V.A. TRACED
REVISED BY C.V.A. CHECKED
CHECKED BY D.T. & W.H.W. CHIEF ENGINEER

No. C-340

STRUCTURE 1-A

**FOR INFORMATION ONLY**

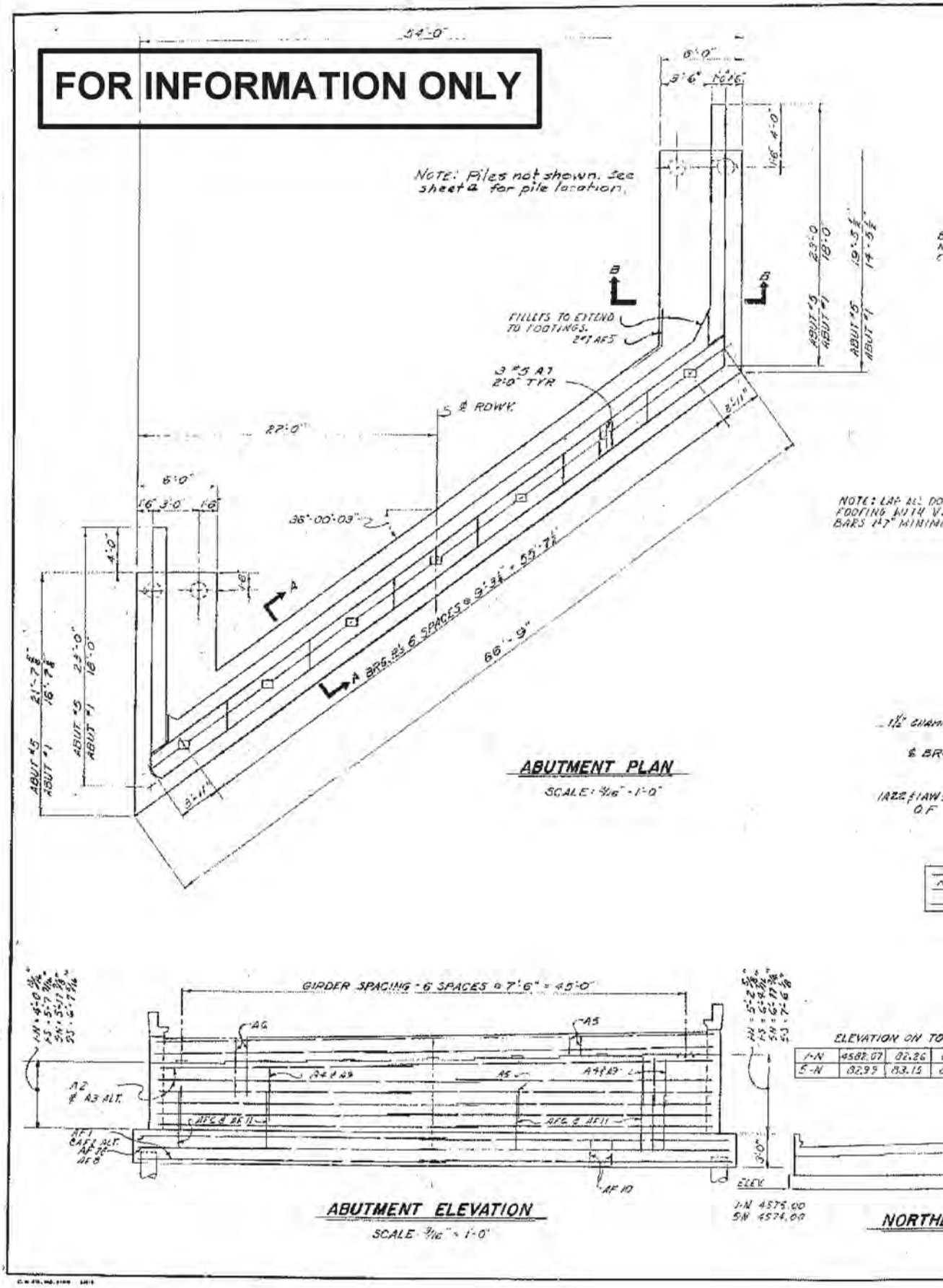

| FED. ROAD DIST. NO. | STATE | FED. AID PROJ. NO. | FISCAL YEAR | SHEET NO. | TOTAL SHEETS |
|---|---|---|---|---|---|
| U.T. | UTAH | | | | |

13

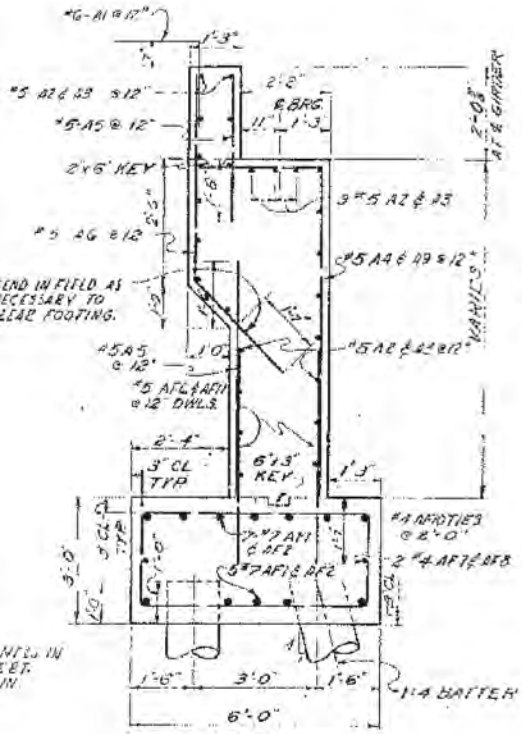


## SECTION A-A

SCALE: ½" = 1'-0"

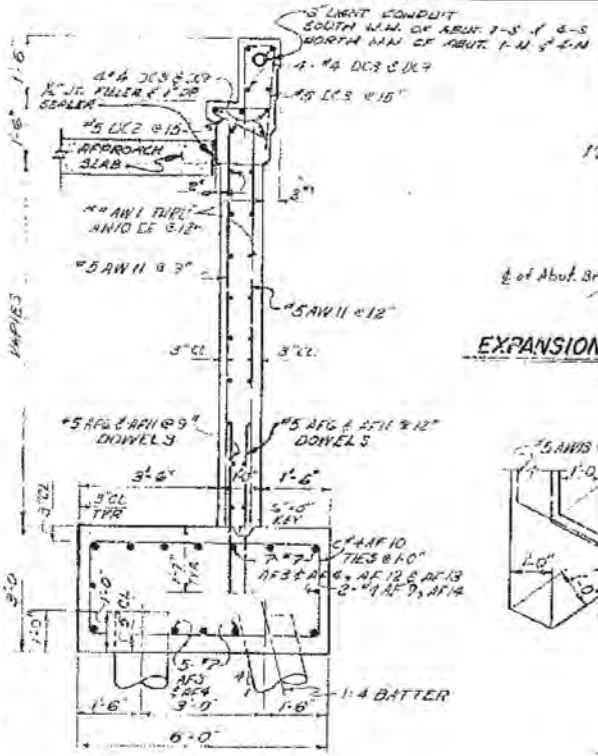


## SECTION B-B

SCALE: ½" = 1'-0"

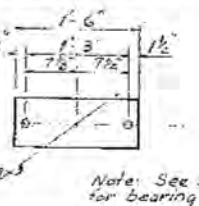


Note: See sheet #9 for bearing plate details

## EXPANSION SHOE PLACEMENT

SCALE: 1" = 1'-0"

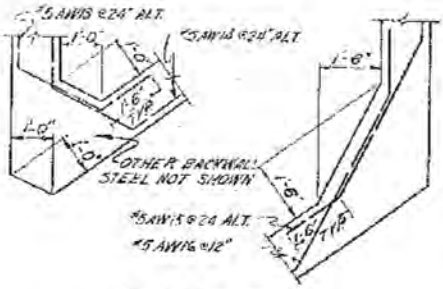


## FILLET DETAILS

SCALE: ½" = 1'-0"

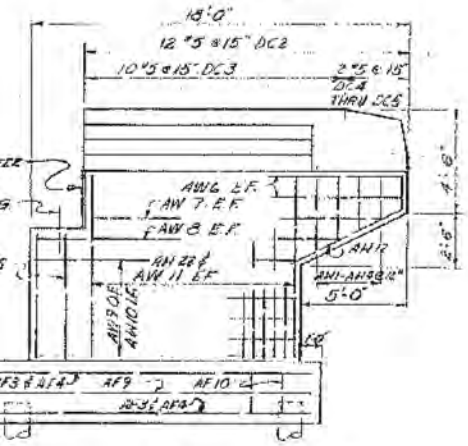


## ABUT. NO. 1 WINGWALL ELEV.

SCALE: ½" = 1'-0"

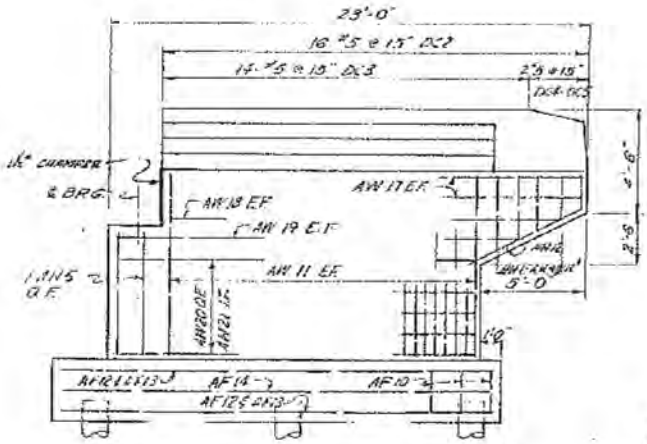


## ABUT. NO. 5 WINGWALL ELEV.

SCALE: ½" = 1'-0"

RESIDENT PROFESSIONAL ENGINEER NO. 2164 J. R. NOWILLE STATE OF UTAH

P OF BEAM SEAT

| | | | | |
|---|---|---|---|---|
| 82.46 | 82.65 | 82.84 | 83.04 | 83.22 |
| 83.32 | 83.48 | 83.65 | 83.82 | 83.96 |

ELEVATION ON TOP OF BEAM SEAT

| | | | | | | | |
|---|---|---|---|---|---|---|---|
| 1-S | 4583.31 | 83.75 | 83.11 | 82.99 | 82.86 | 82.74 | 82.62 |
| 5-S | 84.01 | 83.87 | 83.71 | 83.56 | 83.42 | 83.26 | 83.11 |

## ABUTMENTS NO. 1-N, 1-S, 5-N & 5-S

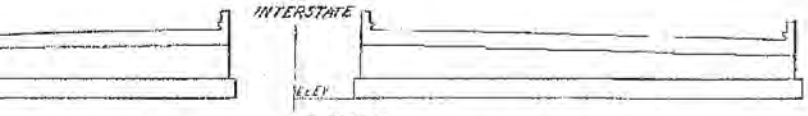


BOUND STRUCTURE

SOUTHBOUND STRUCTURE

DESIGN AND DRAWING BY
WESTERN ENGINEERS, INC. AND
EDWARDS AND KELCEY
CONSULTING ENGINEERS

SUBMITTED BY J. R. Nowille CHIEF ENGINEER
UTAH ENGR. LIC. NO. 2164

SHEET 5 OF 12 SHEETS

UTAH STATE ROAD COMMISSION
SALT LAKE CITY, UTAH
BRIDGE DEPARTMENT

NORTH LEHI INTERCHANGE

191'-4½" O. TO O. — 54° XING ℄
STA. 23+17.830 — I-15-6 (19) 276
LEHI - PROVO — UTAH COUNTY

DESIGNED BY G.T. & B.K. — SCALE AS SHOWN
DRAWN BY B.K. & G.G. — ISSUED June 11, 1963
TRACED BY G.G. — APPROVED D.L. Sharp
CHIEF BRIDGE ENGINEER
CHECKED BY J.M. & B.T. 2-5-61
BY
NO.
ENG. NO. C-340

STRUCTURE 1-A

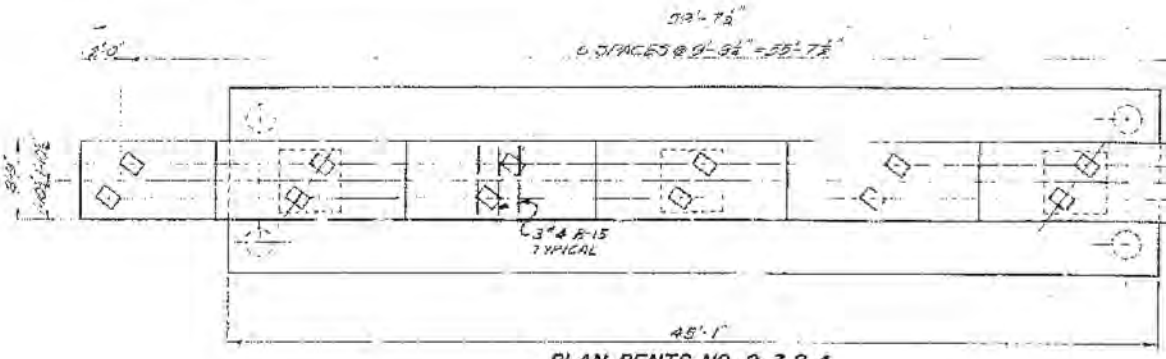


PLAN BENTS NO. 2, 3 & 4

SCALE: ¼" = 1'-0"

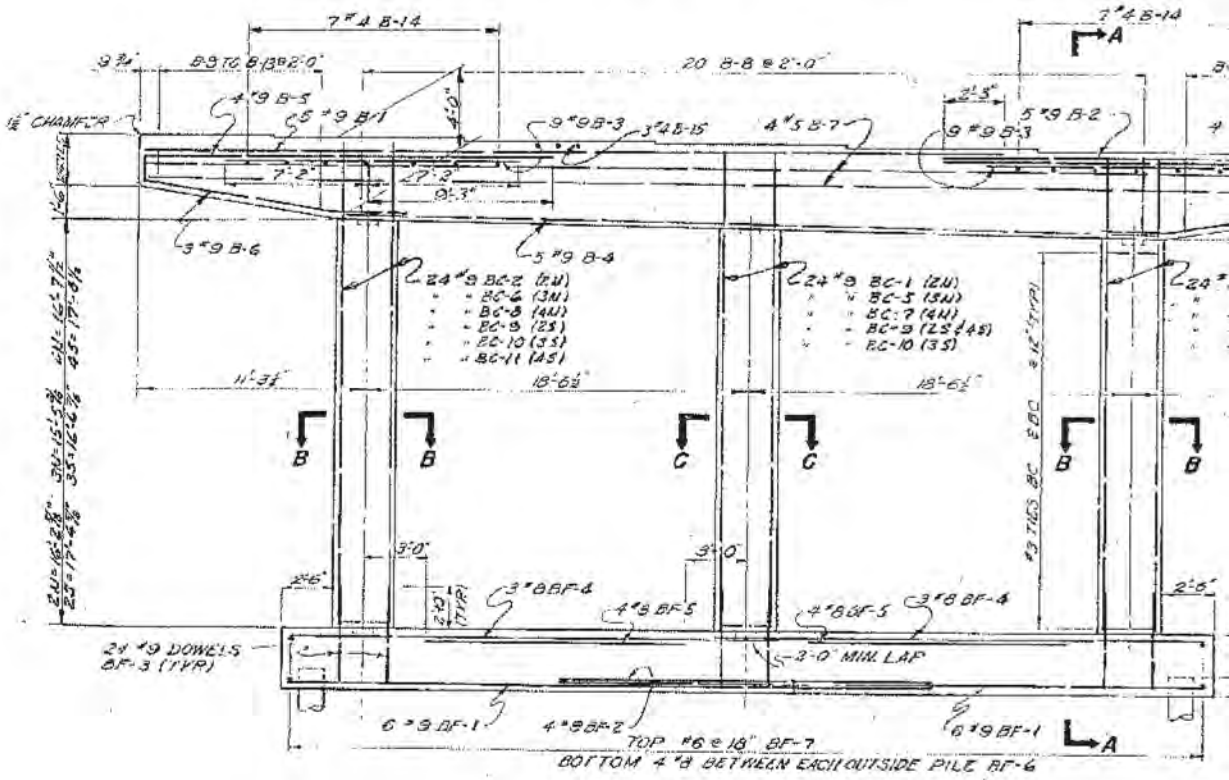


ELEVATION BENTS NO. 2, 3 & 4

SCALE: ¼" = 1'-0"

| | | | | | | | | |
|---|---|---|---|---|---|---|---|---|
| Bent #2 | 4582.39 | 82.58 | 82.76 | 82.95 | 83.13 | 83.33 | 83.50 | "A" |
| | 82.58 | 82.56 | 82.75 | 82.93 | 83.13 | 83.31 | 83.50 | "B" |
| Bent #3 | 82.65 | 82.82 | 83.01 | 83.18 | 83.37 | 83.55 | 83.72 | "A" |
| | 82.63 | 82.81 | 83.00 | 83.17 | 83.36 | 83.54 | 83.71 | "B" |
| Bent #4 | 82.85 | 83.02 | 83.20 | 83.36 | 83.54 | 83.72 | 83.88 | "A" |
| | 82.84 | 83.00 | 83.18 | 83.35 | 83.54 | 83.71 | 83.88 | "B" |

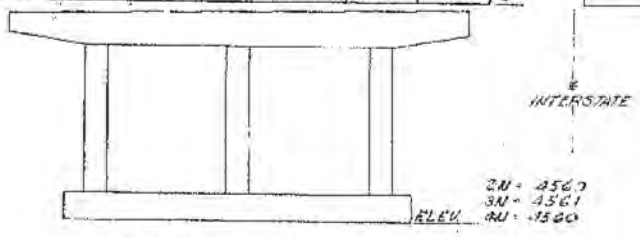


NORTHBOUND STRUCTURE

| | | | | | | |
|---|---|---|---|---|---|---|
| Bent #2 | 4583.61 | 83.49 | 83.35 | 83.22 | 83.09 | 82.9 |
| | 83.41 | 83.48 | 83.35 | 83.22 | 83.09 | 82.9 |
| Bent #4 | 83.80 | 83.66 | 83.54 | 83.39 | 83.26 | 83.7 |
| | 83.80 | 83.66 | 83.52 | 83.38 | 83.25 | 83.7 |
| Bent #4 | 83.94 | 83.80 | 83.65 | 83.50 | 83.37 | 83.7 |
| | 83.94 | 83.80 | 83.65 | 83.50 | 83.36 | 83.7 |

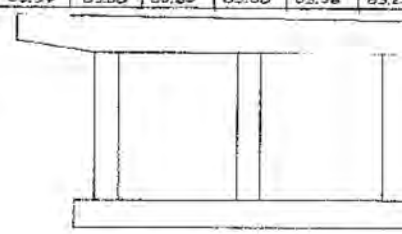

SOUTHBOUND STRUCTURE

DGN Files IP PWPubns\16721\4433.C-040.26\contrfoundcm
02-MAY-2005

**FOR INFORMATION ONLY**

| FED. ROAD DIST. NO. | STATE | FED. AID PROJ. NO. | FISCAL YEAR | SHEET NO. | TOTAL SHEETS |
|---|---|---|---|---|---|
| U 2 | UTAH | | | 14 | |

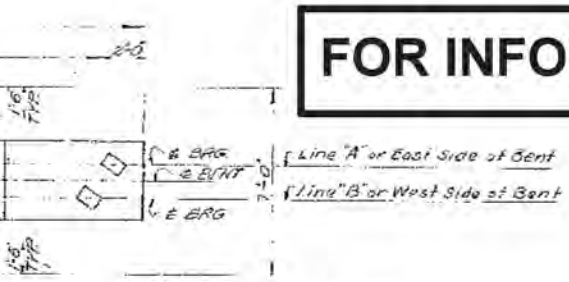


NOTE: Piles not shown see sheet 4 for pile location.

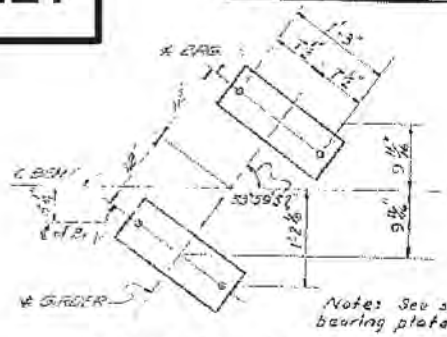


Note: See sheet #9 for bearing plate detail.

ANCHOR BOLT LOCATION PLAN

BENTS NO. 2,3 & 4

SCALE: 1"=1'-0"

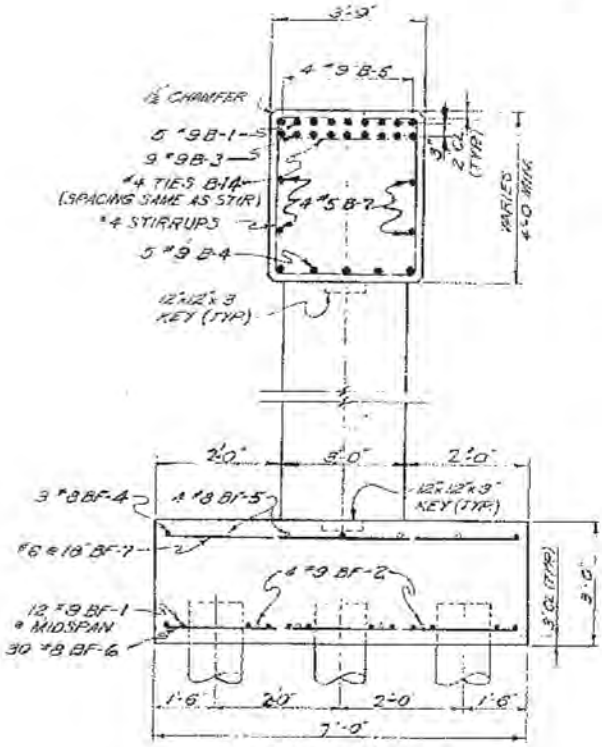


SECTION A-A

SCALE: 1/2"=1'-0"

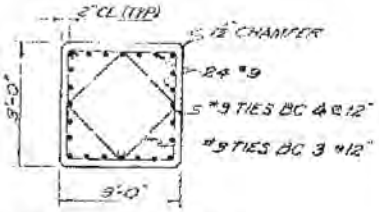


SECTION B-B & C-C

SCALE: 1/2"=1'-0"

| | | |
|---|---|---|
| 95 | 82.82 | "A" |
| 95 | 82.82 | "B" |
| 1 | 82.97 | "A" |
| 1 | 82.97 | "B" |
| 1 | 83.07 | "A" |
| 0 | 83.06 | "B" |

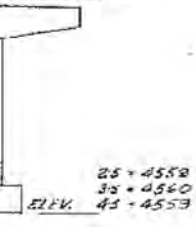

25 = 4552
35 = 4560
ELEV. 45 = 4553

BENTS NO. 2,3 & 4

REGISTERED PROFESSIONAL ENGINEER NO. 2164 L. R. HEWSILLE STATE OF UTAH

DESIGN AND DRAWING BY
WESTERN ENGINEERS, INC. AND
EDWARDS AND KELCEY
CONSULTING ENGINEERS

SUBMITTED BY _____ CHIEF ENGINEER

UTAH ENGR. LIC. NO. 2164

SHEET 6 OF 12 SHEETS

UTAH STATE ROAD COMMISSION
SALT LAKE CITY, UTAH
BRIDGE DEPARTMENT

NORTH LEHI INTERCHANGE

191'-4 1/2" O. TO O. — 54" XING ∠ 5th Contr.

STA. 25 + 17.830 — I-15-6 (15) 276

LEHI-PROVO — UTAH COUNTY

DESIGNED BY BK & BT — SCALE AS SHOWN

DRAWN BY C.J.A. & S.G. — TRACED Jan. 1, '63

TRACED BY C.J.A. & S.G. — APPROVED

CHECKED BY BK & BT — CHIEF BRIDGE ENGINEER

No. _____ — Dwg. No. C-340

STRUCTURE 1-A

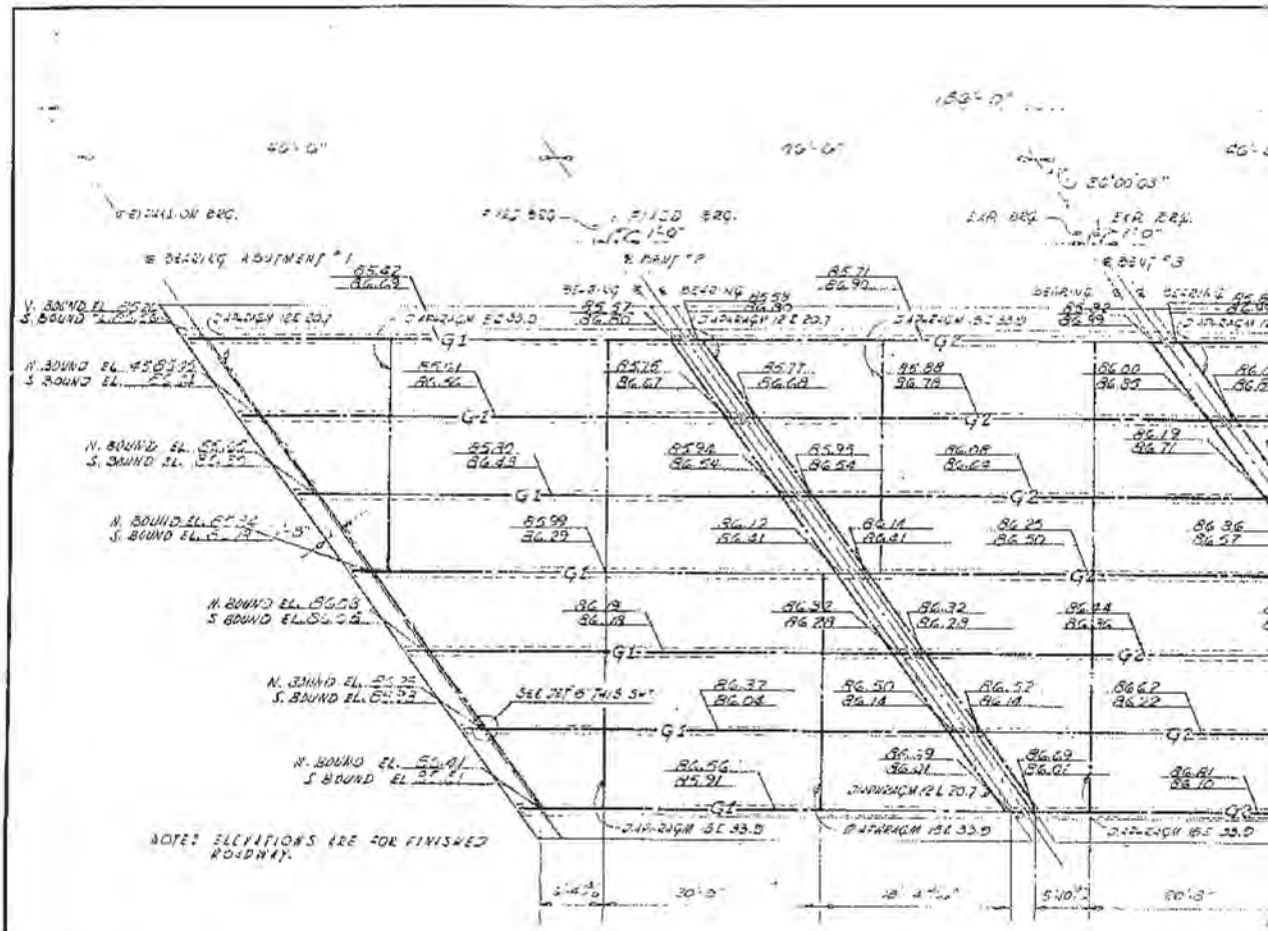

ELEVATION

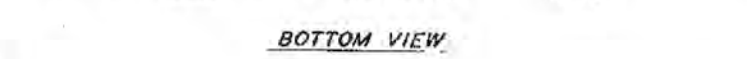

BOTTOM VIEW

G1 - 28 THUS

G2 - 28 THUS

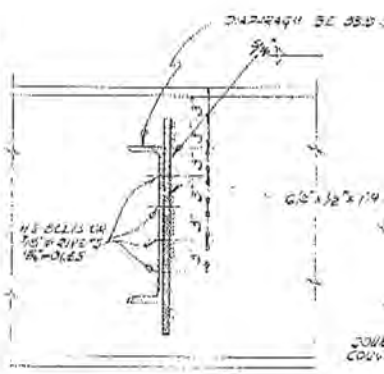

DETAIL - A

SCALE 1/2" = 1'-0"

PARABOLIC CAMBER DIAGRAM

NOTE:
ALL BOLTS TO BE 7/8" DIAMET
HIGH STRENGTH, UNLESS OTHE
NOTED.

| FED. ROAD DIST. NO. | STATE | FED. AID PROJ. NO. | FISCAL YEAR | SHEET NO. | TOTAL SHEETS |
|---|---|---|---|---|---|
| 11 | UTAH | | | 15 | |

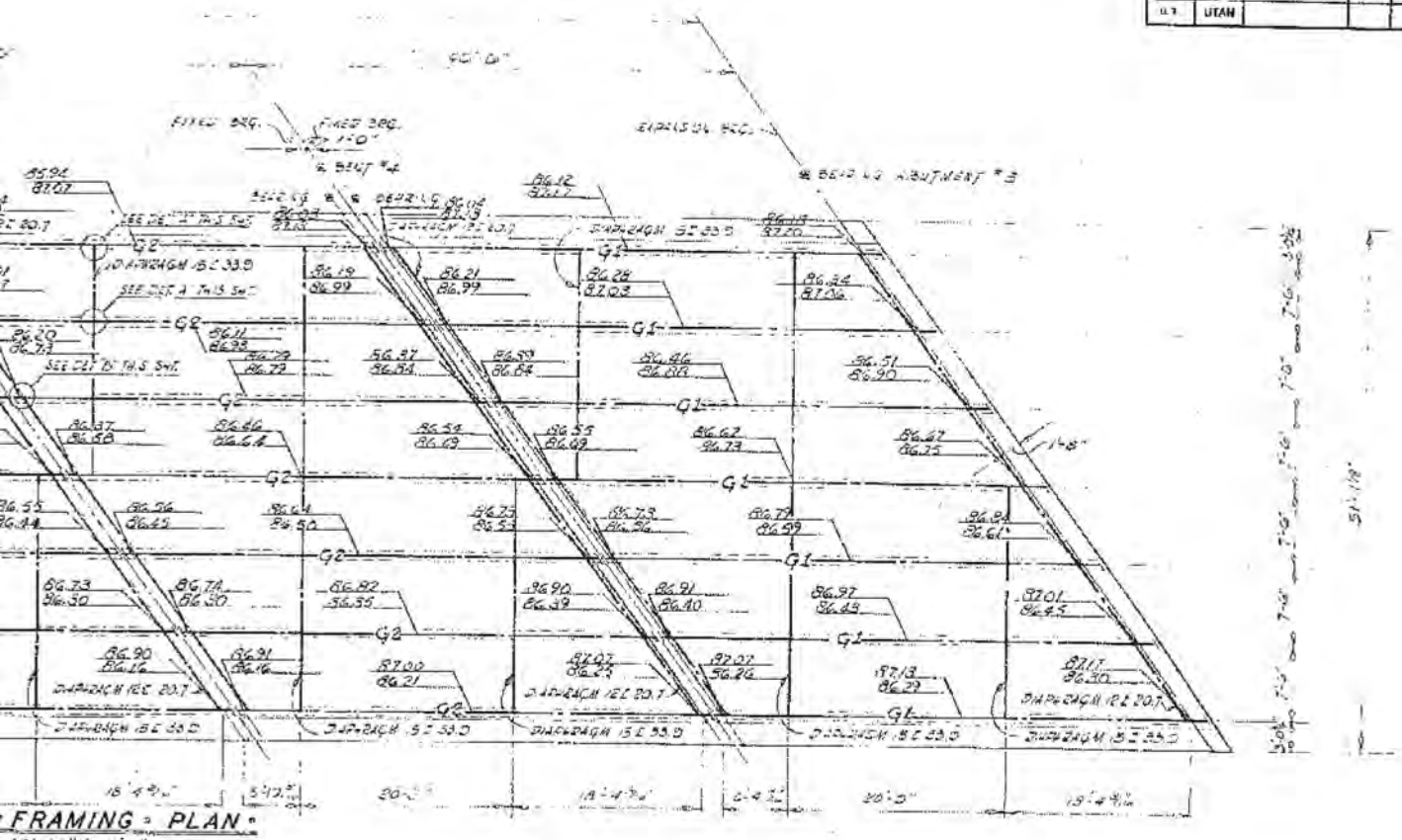


FRAMING PLAN

SCALE: 1/8" = 1'-0"

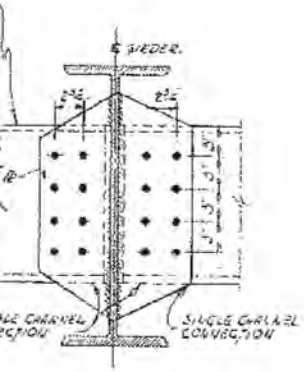


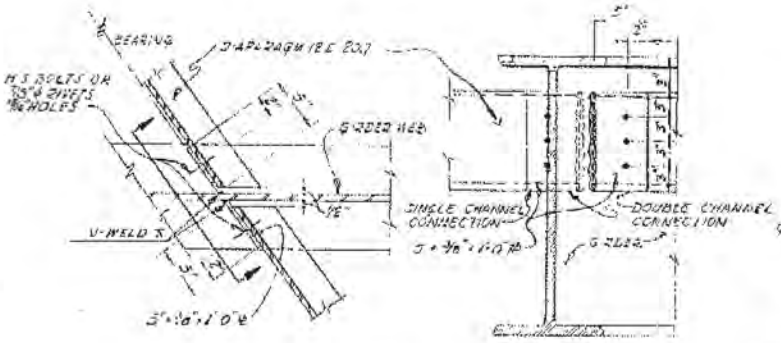


DETAIL - B

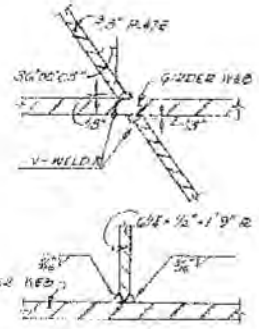


WELDING DETAILS

SCALE: 3" = 1'-0"

**FOR INFORMATION ONLY**

FRAMING PLAN

SHEET 7 OF 12 SHEETS

REGISTERED PROFESSIONAL ENGINEER NO. 2164 J. D. HOWELLS STATE OF UTAH

UTAH STATE ROAD COMMISSION
SALT LAKE CITY, UTAH
BRIDGE DEPARTMENT

NORTH LEHI INTERCHANGE

191'-4 1/4" O. TO O. — 54" XING ∠ 5th Contr.
STA. 23 + 17.850 — 1-15-0 (83) 276
LEHI - PROVO — UTAH COUNTY

DESIGNED BY B.L.J. — NOTE: AS ENGINEER
DRAWN BY B.N.S. — ISSUED December, 1963
CHECKED BY — PROJECT ENGINEER
CHECKED BY B.J. — CHIEF BRIDGE ENGINEER

DWG. No. C-340

DESIGN AND DRAWING BY
WESTERN ENGINEERS, INC. AND
EDWARDS AND KELCEY
CONSULTING ENGINEERS

SUBMITTED BY J. D. Howells CHIEF ENGINEER
UTAH ENGR. LIC. NO. 2164

NOTE:
SEE SHEET 9 FOR SPACING OF SHEAR CONNECTORS FOR STEEL GIRDERS.

STRUCTURE 1-A

**FOR INFORMATION ONLY**

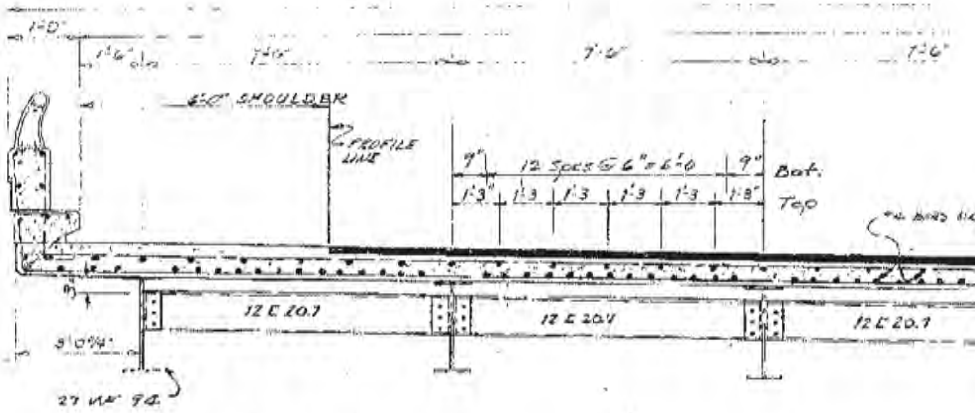


HALF SECTION AT BEARING

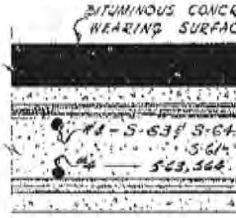


TYPICAL CRO

SCALE: 1/2" = 1'-0"

NOTE:
GIRDERS TO BE CAMBE
SHEET NO. 7 MARKING
FLUSH WITH THE BO

TYPICAL DECK

SCALE: 3" = 1'-0"

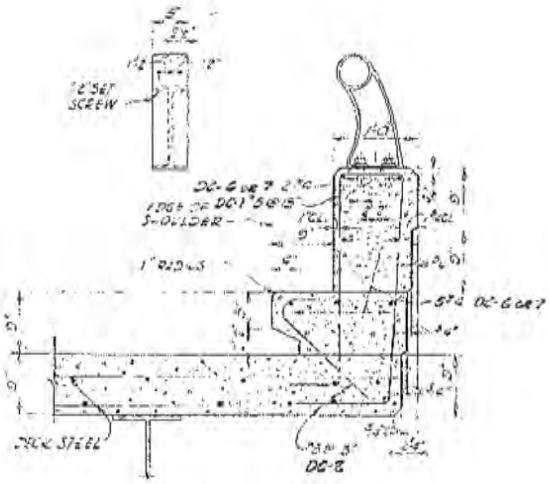


TYPICAL CURB DETAIL

SCALE: 1" = 1'-0"

NOTE: SEE SHEET ST-1 FOR DRILLING DETAILS.

| FED. ROAD DIST. NO. | STATE | FED. AID PROJ. NO. | FISCAL YEAR | SHEET NO. | TOTAL SHEETS |
|---|---|---|---|---|---|
| U.E | UTAH | | | | |

16

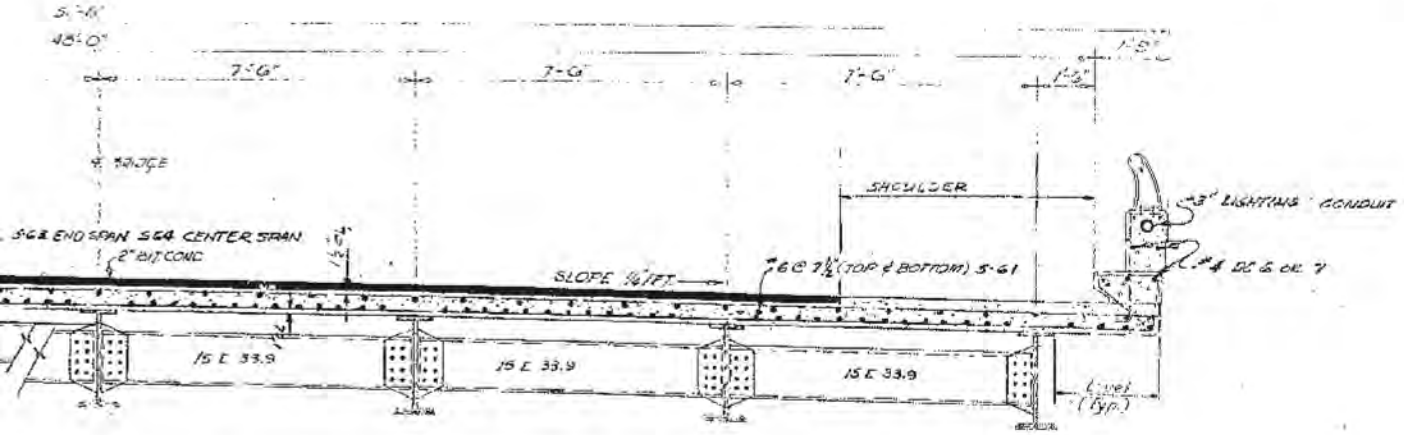


HALF SECTION IN SPAN

SS • SECTION •

RED AS SHOWN ON
THE TOP OF GIRDERS
OTTOM OF CONCRETE.

DETAIL •

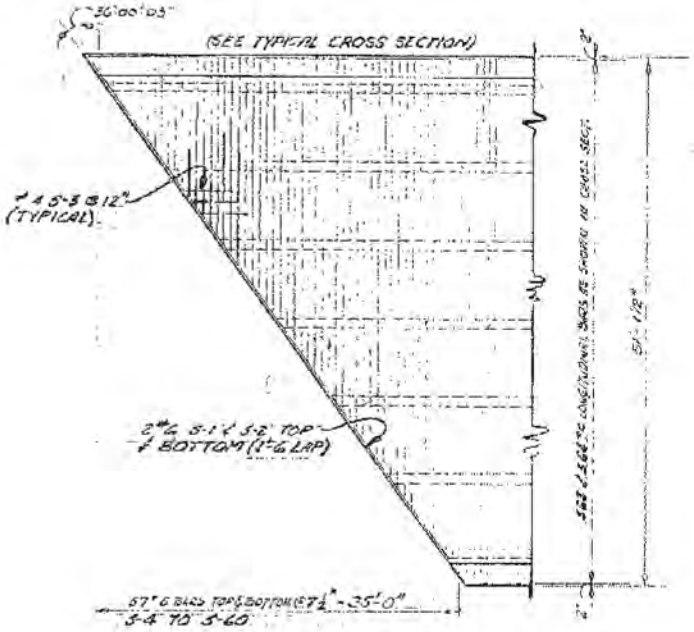


END OF BRIDGE DECK
SCALE: 1/8" = 1'-0"

TRANSVERSE SECTION

SHEET 8 OF 12 SHEETS

UTAH STATE ROAD COMMISSION
SALT LAKE CITY, UTAH
BRIDGE DEPARTMENT

NORTH LEHI INTERCHANGE

191'-4 1/4" O. TO O
STA. 23 + 17.830
I.LEHI - PROVO

54° XING ∠
I-15-6 (91)276 SB Contr.
UTAH COUNTY

DESIGNED BY R.L.B.
CHECKED BY W.K.S.
TRACED BY R.W.S.
CHECKED BY R.L.
SCALE AS SHOWN
ISSUED November 11, 1963
APPROVED [illegible]
CHIEF BRIDGE ENGINEER

DWG. NO. C-340

REGISTERED PROFESSIONAL ENGINEER
NO. 2164
J. R. NEWVILLE
STATE OF UTAH

DESIGN AND DRAWING BY
WESTERN ENGINEERS, INC. AND
EDWARDS AND KELCEY
CONSULTING ENGINEERS

SUBMITTED BY [signature]
CHIEF ENGINEER
UTAH ENGR. LIC. NO. 2164

STRUCTURE 1-A
12

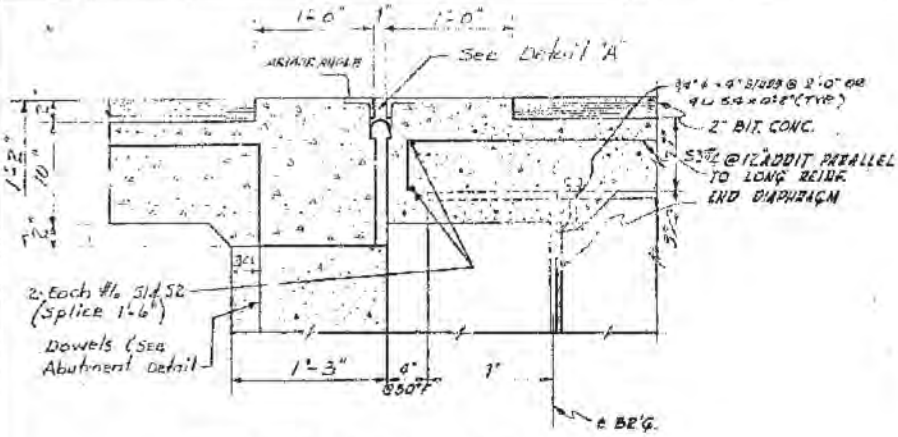


ABUTMENT EXPANSION JOINT DETAIL
SCALE: 1½" = 1'-0"

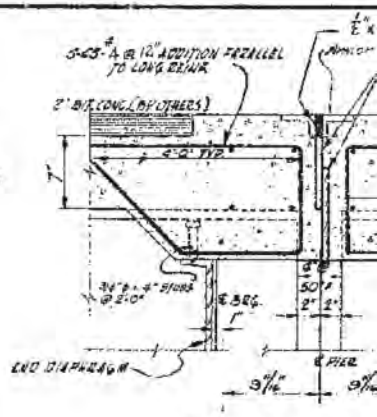


TWO FIXED BE
SCALE: 1½" = 1'-0"

NOTE : BEARING DIMENSIONS SQUARE WITH BENTS & ABUTMENTS.

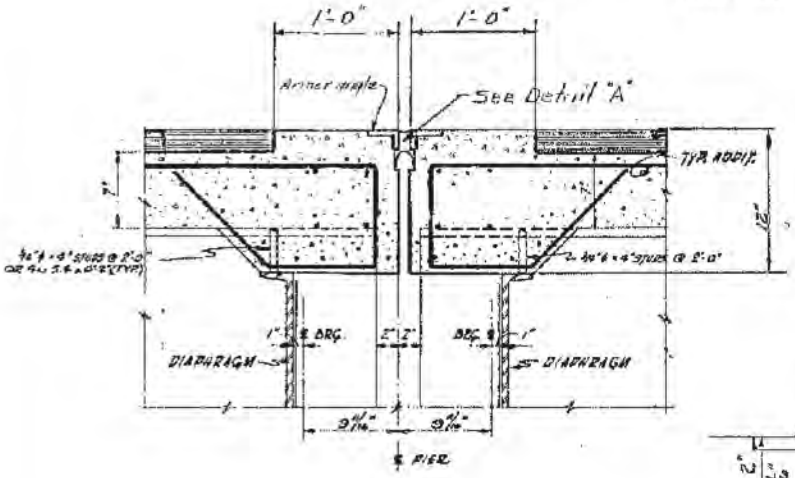


TWO EXPANSION BEARINGS
SCALE: 1½" = 1'-0"

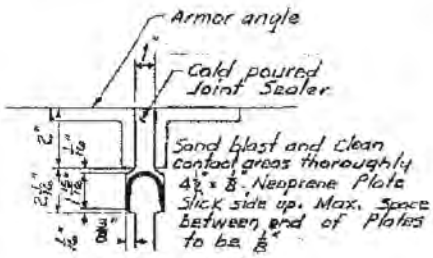


DETAIL "A"

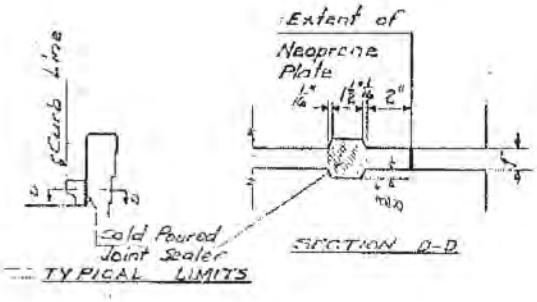


TYPICAL LIMITS

SECTION D-D

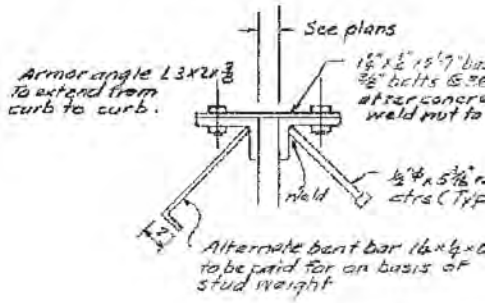


ARMOR ANGLE DETAIL

NOTE
BRIDG
(2" LAR
SHALL
RUBBE
WITHIN

Sel

DGN Files IPL PWPubms\16721\4433.C-040.03\ferrinfocon
02-MAY-2005

| F.A.D. HIGH. DIST. NO. | STATE | FED. AID PROJ. NO. | FISCAL YEAR | SHEET NO. | TOTAL SHEETS |
|---|---|---|---|---|---|
| U. R. | UTAH | | | | |

**FOR INFORMATION ONLY**

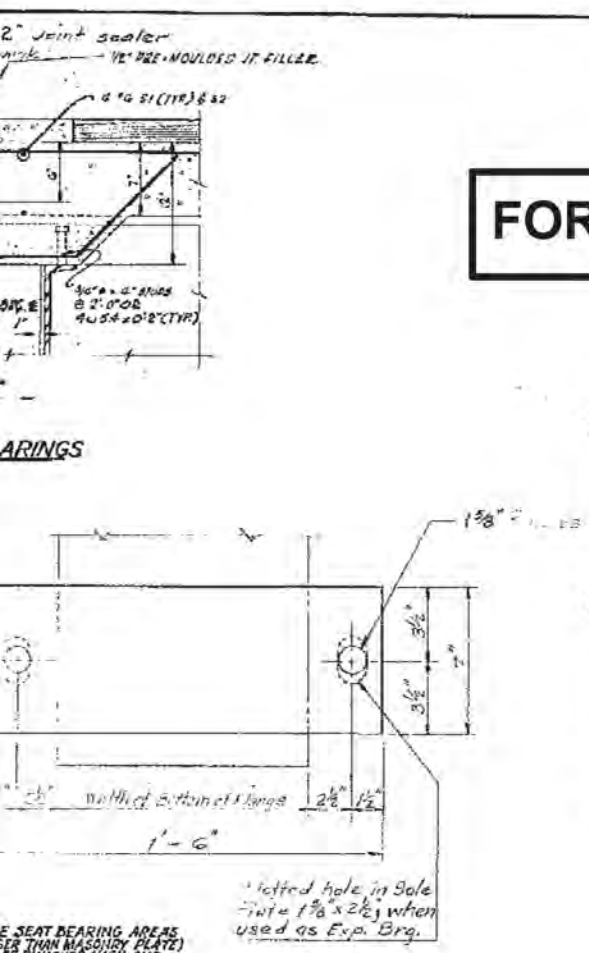


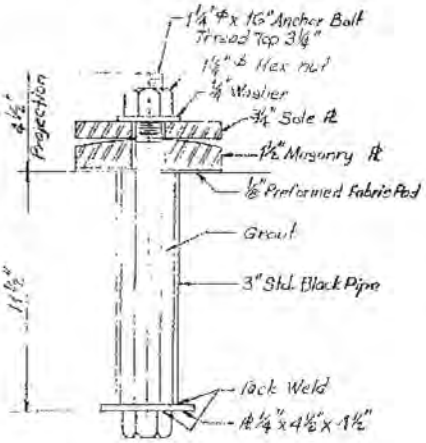


ANCHOR BOLT

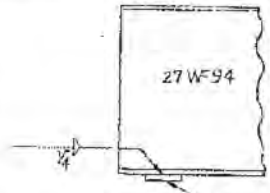


Sole plate. See Beam Layout for slope dimensions

NELDING DETAIL

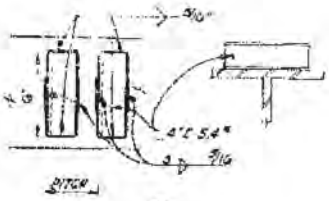


**"CHANNEL" DETAILS**
NOT TO SCALE

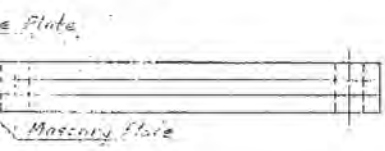


DETAIL OF SOLE & MASONRY PLATE ASSEMBLY AT FIXED & EXPANSION BEARINGS

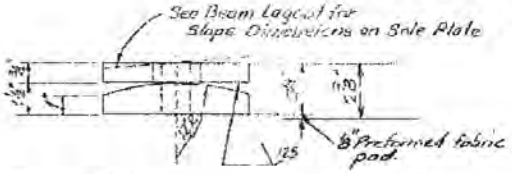


**"SHEAR" CONNECTORS**

**STUD DETAILS**
NOT TO SCALE

bolted to angles by "ctrs - to be furnished te tags set - Tack angle.

min. studs @ 24"

-8"

NOTE: SHEAR CONNECTORS - PAYMENT IS BASED ON WEIGHT OF THE STUD CONNECTORS. CHANNEL CONNECTORS DEVELOPING THE SAME SHEAR AS THE STUDS MAY BE USED AS AN ALTERNATE.

**SHEAR CONNECTOR SPACING**

| END SPANS | INTERMEDIATE SPANS |
|---|---|
| 15 @ 3" | 13 @ 3" |
| 24 @ 4" | 24 @ 4" |
| 12 @ 6" | 12 @ 6" |
| 15 @ 5" | 15 @ 5" |
| 12 @ 6" | 12 @ 6" |
| 24 @ 4" | 24 @ 4" |
| 15 @ 3" | 13 @ 3" |

NOTE: SMALLEST PITCH IS @ CENTER OF BEARING INCREASING TO MAXIMUM PITCH @ CENTER OF SPAN. BEGIN & END PITCH OF SHEAR CONNECTORS @ CENTER OF BEARING. THE SPACING SHOWN IS FOR STUDS & CHANNELS.

DETAILS

SHEET 9 OF 12 SHEETS

UTAH STATE ROAD COMMISSION
SALT LAKE CITY, UTAH
BRIDGE DEPARTMENT

NORTH LEHI INTERCHANGE
191'-4 1/8" O. TO O.
STA 23+17.830
LEHI - PROVO
54" XING ∠
1-15-6 (15)216
UTAH COUNTY

DESIGNED BY E.F.K. DATE AS INDICATED
DRAWN BY D.K.S. PLOTTED Jan. 21, 1963
TRACED BY D.K.S. APPROVED
CHECKED BY D.T. CHIEF BRIDGE ENGINEER

No. C-340

STRUCTURE FA

REGISTERED PROFESSIONAL ENGINEER NO. 2164 I. R. HENVILLE STATE OF UTAH

DESIGN AND DRAWING BY
WESTERN ENGINEERS, INC. AND
EDWARDS AND KELCEY
CONSULTING ENGINEERS

SUBMITTED BY CHIEF ENGINEER
UTAH ENGR. LIC. NO. P164

# BILL OF REINFORCIN

| MARK | SIZE | LGTH. | NO. REQ. | TOTAL LENGTH | TYPE | A | B | C | D | E | F | G | H | J | K | O |
|---|---|---|---|---|---|---|---|---|---|---|---|---|---|---|---|---|
| **SLAB** | | | | | | | | | | | | | | | | |
| S-1 | 6 | 40'-0" | 32 | 1280'-0" | 1 | | | | | | | | | | | |
| S-2 | 6 | 24'-3" | 32 | 776'-0" | 1 | | | | | | | | | | | |
| S-3 | 4 | 3'-6" | 128 | 448'-0 | 4 | | 6" | 3'-0" | | | | | | | | |
| S-4 | 6 | 1'-9" | 16 | 28'-0" | 1 | | | | | | | | | | | |
| S-5 | | 2'-7" | | 81'-4" | | | | | | | | | | | | |
| S-6 | | 3'-6" | | 56'-0" | | | | | | | | | | | | |
| S-7 | | 4'-4" | | 69'-4" | | | | | | | | | | | | |
| S-8 | | 5'-2" | | 82'-8" | | | | | | | | | | | | |
| S-9 | | 6'-1" | | 97'-4" | | | | | | | | | | | | |
| S-10 | | 6'-11" | | 110'-8" | | | | | | | | | | | | |
| S-11 | | 7'-9" | | 124'-0" | | | | | | | | | | | | |
| S-12 | | 8'-8" | | 138'-8" | | | | | | | | | | | | |
| S-13 | | 9'-6" | | 152'-0" | | | | | | | | | | | | |
| S-14 | | 10'-4" | | 165'-4" | | | | | | | | | | | | |
| S-15 | | 11'-3" | | 180'-0" | | | | | | | | | | | | |
| S-16 | | 12'-1" | | 193'-4" | | | | | | | | | | | | |
| S-17 | | 12'-11" | | 206'-8" | | | | | | | | | | | | |
| S-18 | | 13'-10" | | 221'-4" | | | | | | | | | | | | |
| S-19 | | 14'-8" | | 234'-8" | | | | | | | | | | | | |
| S-20 | | 15'-6" | | 248'-0" | | | | | | | | | | | | |
| S-21 | | 16'-5" | | 262'-8" | | | | | | | | | | | | |
| S-22 | | 17'-3" | | 276'-0" | | | | | | | | | | | | |
| S-23 | | 18'-1" | | 289'-4" | | | | | | | | | | | | |
| S-24 | | 19'-0" | | 304'-0" | | | | | | | | | | | | |
| S-25 | | 19'-10" | | 317'-4" | | | | | | | | | | | | |
| S-26 | | 20'-8" | | 330'-8" | | | | | | | | | | | | |
| S-27 | | 21'-7" | | 345'-4" | | | | | | | | | | | | |
| S-28 | | 22'-5" | | 358'-8" | | | | | | | | | | | | |
| S-29 | | 23'-3" | | 372'-0" | | | | | | | | | | | | |
| S-30 | | 24'-1" | | 385'-4" | | | | | | | | | | | | |
| S-31 | | 25'-0" | | 400'-0" | | | | | | | | | | | | |
| S-32 | | 25'-10" | | 413'-0" | | | | | | | | | | | | |
| S-33 | | 26'-8" | | 426'-8" | | | | | | | | | | | | |
| S-34 | | 27'-7" | | 441'-4" | | | | | | | | | | | | |
| S-35 | | 28'-5" | | 454'-8" | | | | | | | | | | | | |
| S-36 | | 29'-3" | | 468'-0" | | | | | | | | | | | | |
| S-37 | | 30'-2" | | 482'-8" | | | | | | | | | | | | |
| S-38 | | 31'-0" | | 496'-0" | | | | | | | | | | | | |
| S-39 | | 31'-10" | | 509'-4" | | | | | | | | | | | | |
| S-40 | | 32'-9" | | 524'-0" | | | | | | | | | | | | |
| S-41 | | 33'-7" | | 537'-4" | | | | | | | | | | | | |
| S-42 | | 34'-5" | | 550'-8" | | | | | | | | | | | | |
| S-43 | | 35'-4" | | 565'-4" | | | | | | | | | | | | |
| S-44 | | 36'-2" | | 578'-8" | | | | | | | | | | | | |
| S-45 | | 37'-0" | | 592'-0" | | | | | | | | | | | | |
| S-46 | | 37'-11" | | 606'-8" | | | | | | | | | | | | |
| S-47 | | 38'-9" | | 620'-0" | | | | | | | | | | | | |
| S-48 | | 39'-7" | | 633'-4" | | | | | | | | | | | | |
| S-49 | | 40'-6" | | 648'-0" | | | | | | | | | | | | |
| S-50 | | 41'-4" | | 661'-4" | | | | | | | | | | | | |
| S-51 | | 42'-2" | | 674'-8" | | | | | | | | | | | | |
| S-52 | | 43'-0" | | 688'-0" | | | | | | | | | | | | |
| S-53 | | 43'-11" | | 702'-8" | | | | | | | | | | | | |
| S-54 | | 44'-9" | | 716'-0" | | | | | | | | | | | | |
| S-55 | | 45'-8" | | 730'-8" | | | | | | | | | | | | |
| S-56 | | 46'-6" | | 744'-0" | | | | | | | | | | | | |
| S-57 | | 47'-4" | | 757'-4" | | | | | | | | | | | | |
| S-58 | | 48'-2" | | 770'-8" | | | | | | | | | | | | |
| S-59 | | 49'-1" | | 785'-4" | | | | | | | | | | | | |
| S-60 | | 49'-11" | 16 | 798'-8" | | | | | | | | | | | | |
| S-61 | 6 | 50'-9" | 128 | 6496'-0" | 1 | | | | | | | | | | | |
| S-63 | 4 | 46'-10" | 258 | 12083'-0" | 1 | | | | | | | | | | | |
| S-64 | 4 | 45'-10" | 258 | 11825'-0" | 1 | | | | | | | | | | | |
| S-65 | 4 | 6'-2" | 390 | 2405'-0" | 8 | | 4'-0" | 10" | 8" | 1'-0" | 12" | 12" | | | | |
| **CURB & PARAPET** | | | | | | | | | | | | | | | | |
| DC-1 | 5 | 7'-9" | 296 | 2294'-0" | 22 | | 1'-0" | 2'-10½" | 9½" | 2'-7½" | | 3½" | | | | |
| DC-2 | 5 | 3'-1" | 352 | 1085'-4" | 21 | | 1'-4½" | 1'-8½" | | | | 1'-0" | | 1'-0" | | |
| DC-3 | 5 | 6'-0" | 48 | 288'-0" | 22 | | | 2'-10½" | 9½" | 2'-1½" | | 3½" | | | | |
| DC-4 | 5 | 5'-7" | 4 | 22'-4" | 22 | | | 2'-8½" | 8" | 2'-5½" | | 3½" | | | | |
| DC-5 | 5 | 4'-10" | 4 | 19'-8" | 22 | | | 2'-5½" | 5" | 2'-2½" | | 3½" | | | | |
| DC-6 | 4 | 47'-11" | 28 | 1341'-8" | 1 | | | | | | | | | | | |
| DC-7 | 4 | 45'-10" | 28 | 1283'-4" | 1 | | | | | | | | | | | |
| DC-8 | 4 | 18'-7" | 18 | 334'-6" | 1 | | | | | | | | | | | |
| DC-9 | 4 | 13'-7" | 18 | 244'-6" | 1 | | | | | | | | | | | |

| MARK | SIZE | LGTH. | NO. REQ. | TOTAL LENGTH | TYPE | A | B | C | D | E |
|---|---|---|---|---|---|---|---|---|---|---|
| **APPROACH SLAB** | | | | | | | | | | |
| AS-1 | 8 | 17'-6" | 24 | 420'-0 | 1 | | | | | |
| AS-2 | 7 | 14'-6" | 162 | 2349'-0" | | | | | | |
| AS-3 | | 13'-6" | 4 | 54'-0" | | | | | | |
| AS-4 | | 12'-7" | | 50'-4" | | | | | | |
| AS-5 | | 11'-8" | | 46'-8" | | | | | | |
| AS-6 | | 10'-9" | | 43'-0" | | | | | | |
| AS-7 | | 9'-10" | | 39'-4" | | | | | | |
| AS-8 | | 8'-11" | | 35'-8" | | | | | | |
| AS-9 | | 8'-0" | | 32'-0" | | | | | | |
| AS-10 | | 7'-1" | | 28'-4" | | | | | | |
| AS-11 | | 6'-2" | | 24'-8" | | | | | | |
| AS-12 | | 5'-3" | | 21'-0" | | | | | | |
| AS-13 | | 4'-4" | | 17'-4" | | | | | | |
| AS-14 | | 3'-5" | | 13'-8" | | | | | | |
| AS-15 | | 2'-6" | | 10'-0" | | | | | | |
| AS-16 | 7 | 1'-7" | 4 | 6'-4" | | | | | | |
| AS-17 | 5 | 14'-6" | 110 | 1595'-0" | | | | | | |
| AS-18 | | 13'-1" | 4 | 52'-4" | | | | | | |
| AS-19 | | 11'-8" | | 46'-8" | | | | | | |
| AS-20 | | 10'-4" | | 41'-4" | | | | | | |
| AS-21 | | 8'-11" | | 35'-8" | | | | | | |
| AS-22 | | 7'-7" | | 30'-4" | | | | | | |
| AS-23 | | 6'-2" | | 24'-8" | | | | | | |
| AS-24 | | 4'-10" | | 19'-4" | | | | | | |
| AS-25 | | 3'-5" | | 13'-8" | | | | | | |
| AS-26 | | 2'-1" | 4 | 8'-4" | | | | | | |
| AS-27 | | 17'-11" | 8 | 143'-4" | | | | | | |
| AS-28 | | 40'-0" | 64 | 2560'-0 | | | | | | |
| AS-29 | 5 | 25'-1" | 64 | 1605'-4" | 1 | | | | | |
| **FOOTING BENT #2** | | | | | | | | | | |
| BF-1 | 9 | 31'-3" | 12 | 375'-0" | 1 | | | | | |
| BF-2 | 9 | 18'-0" | 4 | 72'-0" | | | | | | |
| BF-3 | 9 | 5-7 | 72 | 402'-0" | | | | | | |
| BF-4 | 8 | 23'-5" | 6 | 142'-6" | | | | | | |
| BF-5 | 8 | 15'-6" | 8 | 124'-0" | | | | | | |
| BF-6 | 8 | 6'-6" | 31 | 201'-6" | | | | | | |
| BF-7 | 6 | 6'-6" | 31 | 201'-6" | 1 | | | | | |
| **BENT COLUMN 2N.** | | | | | | | | | | |
| BC-1 | 9 | 18'-9" | 48 | 900'-0" | 1 | | | | | |
| BC-2 | 9 | 19'-1" | 24 | 458'-0" | 1 | | | | | |
| BC-3 | 3 | 7'-11½" | 47 | 374'-0" | 12 | 4" | 1'-10½" | 1'-10½" | 1'-10½" | 1'-10½" |
| BC-4 | 3 | 11'-1" | 47 | 520'-11" | 12 | 4" | 2'-0" | 2'-8" | 2'-8" | 2'-8" |
| **BENT COLUMN 3N** | | | | | | | | | | |
| BC-5 | 9 | 18'-0" | 48 | 864'-0" | 1 | | | | | |
| BC-6 | 9 | 18'-4" | 24 | 440'-0" | 1 | | | | | |
| BC-3 | 3 | 7'-11½" | 44 | 350'-2" | 12 | SAME AS COL 2N | | | | |
| BC-4 | 3 | 11'-1" | 44 | 487'-8" | 12 | " " " | | | | |
| **BENT COLUMN 4N** | | | | | | | | | | |
| BC-7 | 9 | 19'-3" | 48 | 924'-0" | 1 | | | | | |
| BC-8 | 9 | 19'-6" | 24 | 468'-0" | 1 | | | | | |
| BC-3 | 3 | 7'-11½" | 47 | 374'-0" | 12 | SAME AS COL 2N | | | | |
| BC-4 | 3 | 11'-1" | 47 | 520'-9" | 12 | " " " | | | | |
| **BENT COLUMN 2S** | | | | | | | | | | |
| BC-9 | 9 | 20'-2½" | 72 | 1455'-0" | 1 | | | | | |
| BC-3 | 3 | 7'-11½" | 50 | 397'-11" | 12 | SAME AS COL 2N | | | | |
| BC-4 | 3 | 11'-1" | 50 | 554'-2" | 12 | " " " | | | | |
| **BENT COLUMN 3S** | | | | | | | | | | |
| BC-10 | 9 | 19'-4½" | 72 | 1395'-0" | 1 | | | | | |
| BC-3 | 3 | 7'-11½" | 47 | 374'-0" | 12 | SAME AS COL 2N | | | | |
| BC-4 | 3 | 11'-1" | 47 | 520'-9" | 12 | " " " | | | | |

* NOTE:
STEEL QUANTITY SHOWN FOR SLAB, CURB, & PARAPET & APPROACH SLAB IS FOR ONE STRUCTURE. BOTH STRUCTURES ARE SIMILAR

* NOTE:
STEE
FOR
IS FO
GE. T
OTHE

DGN Files IPL PWBridges\16724\4433_C-040_18Forms\Bridge
02-MAY-2005

G STEEL

| MARK | SIZE | LGTH. | NO. REQ. | TOTAL LENGTH | TYPE | A | B | C | D | E | F | G | H | J | K | O |
|---|---|---|---|---|---|---|---|---|---|---|---|---|---|---|---|---|
| BENT COLUMN 4S | | | | | | | | | | | | | | | | |
| BC-11 | 9 | 20'-7" | 24 | 494'-0" | 1 | | | | | | | | | | | |
| BC-9 | 9 | 20'-2½" | 48 | 970'-0" | 1 | | | | | | | | | | | |
| BC-3 | 3 | 7'-11⅛" | 51 | 465'-10" | 12 | SAME AS COL 2-N | | | | | | | | | | |
| BC-4 | 3 | 11'-1" | 51 | 565'-3" | 12 | " " " " " | | | | | | | | | | |
| BENT CAP 2-N | | | | | | | | | | | | | | | | |
| B-1 | 9 | 41'-2" | 5 | 205'-10" | 1 | | | | | | | | | | | |
| B-2 | ″ | 20'-5" | 5 | 102'-1" | 1 | | | | | | | | | | | |
| B-3 | ″ | 14'-4" | 18 | 258'-0" | 1 | | | | | | | | | | | |
| B-4 | ″ | 39'-4" | 5 | 196'-8" | 1 | | | | | | | | | | | |
| B-5 | ″ | 22'-3" | 8 | 178'-0" | 4 | | 2'-2" | 20'-6" | | | | | | | | |
| B-6 | 9 | 12'-4" | 6 | 74'-0" | 6 | | 2'-7½" | 9'-8½" | | | | | | | | |
| B-7 | 5 | 59'-3" | 4 | 237'-0" | 1 | | | | | | | | | | | |
| B-8 | 4 | 14'-6" | 20 | 290'-0" | 11 | 5" | 3'-5" | 3'-8" | 3'-5" | 3'-8" | | | | | | |
| B-9 | ″ | 14'-2½" | 2 | 28'-5" | ″ | ″ | ″ | 3'-6¼" | ″ | 3'-6¼" | | | | | | |
| B-10 | ″ | 13'-7½" | ″ | 27'-3" | ″ | ″ | ″ | 3'-2¾" | ″ | 3'-2¾" | | | | | | |
| B-11 | ″ | 13'-0" | ″ | 26'-0" | ″ | ″ | ″ | 2'-11" | ″ | 2'-11" | | | | | | |
| B-12 | ″ | 12'-4½" | ″ | 24'-9" | ″ | ″ | ″ | 2'-7¼" | ″ | 2'-7¼" | | | | | | |
| B-13 | ″ | 11'-9" | 2 | 23'-6" | 11 | 5" | 3'-5" | 2'-3½" | 3'-5" | 2'-3½" | | | | | | |
| B-14 | ″ | 4'-2½" | 14 | 58'-11" | 5 | | 6" | 3'-5" | 6" | | | | | | | |
| B-15 | 4 | 3'-3" | 21 | 68'-3" | 1 | | | | | | | | | | | |

...L QUANTITY SHOWN
...FOOTING & BENT CAP
...R BENT 2-N & WILL
...HE SAME FOR THE
...R FIVE BENTS

**FOR INFORMATION ONLY**

| FED. ROAD DIST. NO. | STATE | FED. AID PROJ. NO. | FISCAL YEAR | SHEET NO. | TOTAL SHEETS |
|---|---|---|---|---|---|
| UT | UTAH | | | | |

## BAR TYPES

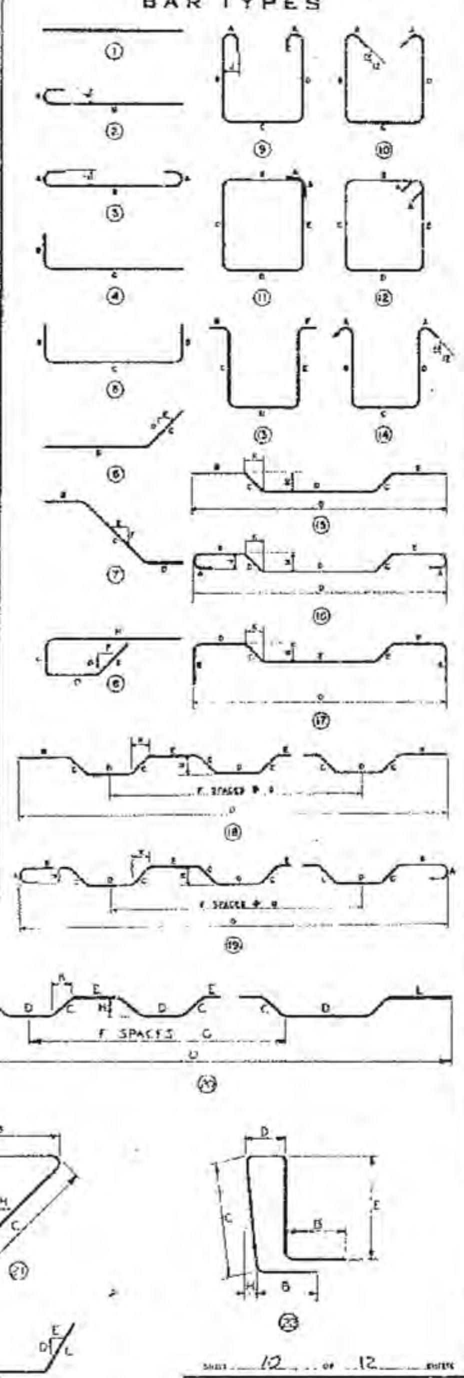

HOOK DETAIL

REGISTERED PROFESSIONAL ENGINEER
NO. 2164
J. R. NEWVILLE
STATE OF UTAH

GENERAL NOTES

1. All placing drawings, detailing, and fabrication shall be in accordance with the "Manual of Standard Practice for Detailing Reinforced Concrete Structures (ACI 315-57)".
2. All dimensions shown for bar bending details are out-to-out of bars.

SHEET 12 OF 12 SHEETS

UTAH STATE ROAD COMMISSION
SALT LAKE CITY, UTAH
BRIDGE DEPARTMENT

NORTH LEHI INTERCHANGE

191'-4- O. TO O.
STA 234 17 830
LEHI-PROVO

54° X ING ∠
1-15-8 (...)
UTAH COUNTY

DESIGNED BY
DRAWN BY
TRACED BY
CHECKED BY
SCALE
ISSUED
APPROVED
CHIEF BRIDGE ENGINEER

DESIGN AND DRAWING BY
WESTERN ENGINEERS, INC. AND
EDWARDS AND KELCEY
CONSULTING ENGINEERS

SUBMITTED BY [signature]
CHIEF ENGINEER
UTAH ENGR. LIC. NO. 2164

DWG. NO. C-340

STRUCTURE 1-A

4

# BILL OF REINFORCIN

| MARK | SIZE | LGTH. | NO. REQ. | TOTAL LENGTH | TYPE | A | B | C | D | E | F | G | H | J | K | O |
|---|---|---|---|---|---|---|---|---|---|---|---|---|---|---|---|---|
| **ABUTMENT 1-S** | | | | | | | | | | | | | | | | |
| **FOOTING** | | | | | | | | | | | | | | | | |
| AF-1 | 7 | 40'-0" | 12 | 480'-0" | 1 | | | | | | | | | | | |
| AF-2 | | 27'-11" | | 335'-0" | | | | | | | | | | | | |
| AF-3 | | 11'-0" | | 132'-0" | | | | | | | | | | | | |
| AF-4 | | 9'-0" | 12 | 108'-0" | 1 | | | | | | | | | | | |
| AF-5 | 7 | 3'-5" | 2 | 6'-10" | 6 | | 1'-9" | 1'-9" | 5" | 3½" | | | | | | |
| AF-6 | 5 | 5'-1" | 180 | 915'-0" | 1 | | | | | | | | | | | |
| AF-7 | 4 | 40'-0" | 2 | 80'-0" | 1 | | | | | | | | | | | |
| AF-8 | | 27'-11" | 2 | 55'-10" | | | | | | | | | | | | |
| AF-9 | | 11'-0 | 4 | 44'-0" | | | | | | | | | | | | |
| AF-10 | 4 | 16'-4 | 44 | 718'-8 | 12 | 5" | 5'-6" | 2'-6" | 5'-6" | 2'-6" | | | | | | |
| **ABUTMENT** | | | | | | | | | | | | | | | | |
| A-1 | 6 | 5'-10" | 64 | 285'-4" | 4 | | 2'-0" | 2'-0" | | | | | | | | |
| A-2 | 5 | 40'-0" | 25 | 1000'-0" | 1 | | | | | | | | | | | |
| A-3 | | 23'-6" | 25 | 587'-6" | 1 | | | | | | | | | | | |
| A-4 | | 7'-7" | 64 | 485'-4" | 4 | | 2'-8" | 5'-4" | | | | | | | | |
| A-5 | | 3'-6" | 128 | 448'-0" | 1 | | | | | | | | | | | |
| A-6 | | 7'-4" | 64 | 470'-0" | 6 | | 4'-4½" | 3'-0" | 1 | 1 | | | | | | |
| A-7 | 5 | 2'-0" | 21 | 42'-0 | 1 | | | | | | | | | | | |
| **SOUTH WING WALL** | | | | | | | | | | | | | | | | |
| AW-1 | 5 | 2'-5" | 2 | 4'-10" | 1 | | | | | | | | | | | |
| AW-2 | | 2'-11" | | 5'-10" | | | | | | | | | | | | |
| AW-3 | | 3'-5" | | 6'-10" | | | | | | | | | | | | |
| AW-4 | | 3'-11" | 2 | 7'-10" | | | | | | | | | | | | |
| AW-5 | | 5'-4" | 1 | 5'-4" | | | | | | | | | | | | |
| AW-6 | | 13'-9" | 4 | 55'-0" | | | | | | | | | | | | |
| AW-7 | | 11'-9" | 2 | 23'-6" | | | | | | | | | | | | |
| AW-8 | | 12'-5" | 2 | 24'-10" | | | | | | | | | | | | |
| AW-9 | | 12'-8" | 5 | 63'-4 | | | | | | | | | | | | |
| AW-10 | | 10'-0" | 5 | 50'-0" | | | | | | | | | | | | |
| AW-11 | | 9'-0" | 24 | 216'-0" | 1 | | | | | | | | | | | |
| AW-12 | | 6'-7" | 2 | 13'-2" | 6 | | 11" | 5'-9" | 2 | 1 | | | | | | |
| AW-13 | | 5'-2" | 5 | 25'-10" | 23 | | 2'-3½" | 1'-6" | 1 | 2 | | | 1 | | 2 | |
| AW-14 | | 5'-0" | 5 | 25'-0" | | | 2'-1" | 1'-6" | 1 | 2 | | | 1 | | 2 | |
| AW-15 | | 8'-5" | 5 | 42'-1" | | | 5'-6" | 1'-6" | 1 | 2 | | | 1 | | 2 | |
| AW-16 | 5 | 7'-10" | 10 | 78'-4" | 23 | | 4'-11" | 1'-6" | 1 | 2 | | | 1 | | 2 | |
| **NORTH WING WALL** | | | | | | | | | | | | | | | | |
| SAME AS SOUTH WING WALL OF ABUT. 1-S | | | | | | | | | | | | | | | | |
| **ABUTMENT 1-N** | | | | | | | | | | | | | | | | |
| **FOOTING** | | | | | | | | | | | | | | | | |
| AF-1 THRU AF-5 SAME AS 1-S | | | | | | | | | | | | | | | | |
| AF-7 THRU AF-10 SAME AS 1-S | | | | | | | | | | | | | | | | |
| AF-11 | 5 | 4'-8" | 180 | 840'-0" | 1 | | | | | | | | | | | |
| **ABUTMENT** | | | | | | | | | | | | | | | | |
| A-1 THRU A-3, A-6 AND A-7 SAME AS 1-S | | | | | | | | | | | | | | | | |
| A-5 | 5 | 3'-6" | 64 | 224'-0" | 1 | | | | | | | | | | | |
| A-9 | 5 | 6'-1" | 64 | 389'-4 | 4 | | 2'-4 | 3'-10" | | | | | | | | |
| **SOUTH WING WALL** | | | | | | | | | | | | | | | | |
| AW-1 THRU AW-4 SAME AS 1-S | | | | | | | | | | | | | | | | |
| AW-6 THRU AW-10 SAME AS 1-S | | | | | | | | | | | | | | | | |
| AW-12 THRU AW-16 SAME AS 1-S | | | | | | | | | | | | | | | | |
| AW-22 | 5 | 3'-6" | 1 | 3'-6" | 1 | | | | | | | | | | | |
| AW-23 | 5 | 7'-4" | 24 | 176'-0" | 1 | | | | | | | | | | | |
| **NORTH WING WALL** | | | | | | | | | | | | | | | | |
| SAME AS SOUTH WING WALL OF ABUT. 1N. | | | | | | | | | | | | | | | | |

| MARK | SIZE | LGTH. | NO. REQ. | TOTAL LENGTH | TYPE | A | B | C | D | E |
|---|---|---|---|---|---|---|---|---|---|---|
| **ABUTMENT 5-S** | | | | | | | | | | |
| **FOOTING** | | | | | | | | | | |
| AF-1, AF-2 AND AF-5 SAME AS 1-S | | | | | | | | | | |
| AF-12 | 7 | 14'-0" | 12 | 168'-0" | 1 | | | | | |
| AF-13 | 7 | 16'-0" | 12 | 192'-0" | 1 | | | | | |
| AF-6 | 5 | 5'-1" | 200 | 1016'-8" | 1 | | | | | |
| AF-7 AND AF-8 SAME AS 1-S | | | | | | | | | | |
| AF-10 | 4 | 16'-4" | 56 | 914'-8" | 12 | 5" | 5'-6" | 2'-6" | 5'-6" | 2'- |
| AF-14 | 4 | 16'-0" | 2 | 32'-0" | 1 | | | | | |
| **ABUTMENT** | | | | | | | | | | |
| SAME AS ABUTMENT 1-S | | | | | | | | | | |
| **SOUTH WING WALL** | | | | | | | | | | |
| AW-1 THRU AW-5 SAME AS 1-S | | | | | | | | | | |
| AW-11 | 5 | 9'-0" | 37 | 333'-0" | 1 | | | | | |
| AW-12 THRU AW-16 SAME AS 1-S | | | | | | | | | | |
| AW-17 | 5 | 18'-9" | 4 | 75'-0" | 1 | | | | | |
| AW-18 | | 16'-9" | 2 | 33'-6" | | | | | | |
| AW-19 | | 17'-5" | 2 | 34'-10" | | | | | | |
| AW-20 | | 17'-8" | 6 | 106'-0" | | | | | | |
| AW-21 | 5 | 15'-0" | 6 | 90'-0" | 1 | | | | | |
| **NORTH WING WALL** | | | | | | | | | | |
| SAME AS SOUTH WING WALL OF ABUT. 5 | | | | | | | | | | |
| **ABUTMENT 5-N** | | | | | | | | | | |
| SAME AS ABUTMENT 5-S | | | | | | | | | | |

G STEEL

| F | G | H | J | K | O | MARK | SIZE | LGTH. | NO. REQ. | TOTAL LENGTH | TYPE | A | B | C | D | E | F | G | H | J | K | O |
|---|---|---|---|---|---|---|---|---|---|---|---|---|---|---|---|---|---|---|---|---|---|---|

| FED. ROAD DIST. NO. | STATE | FED. AID PROJ. NO. | SHEET YEAR | SHEET TYPE | SHEET SUFFIX |
|---|---|---|---|---|---|
| U.Y. | UTAH | | | | |

## BAR TYPES

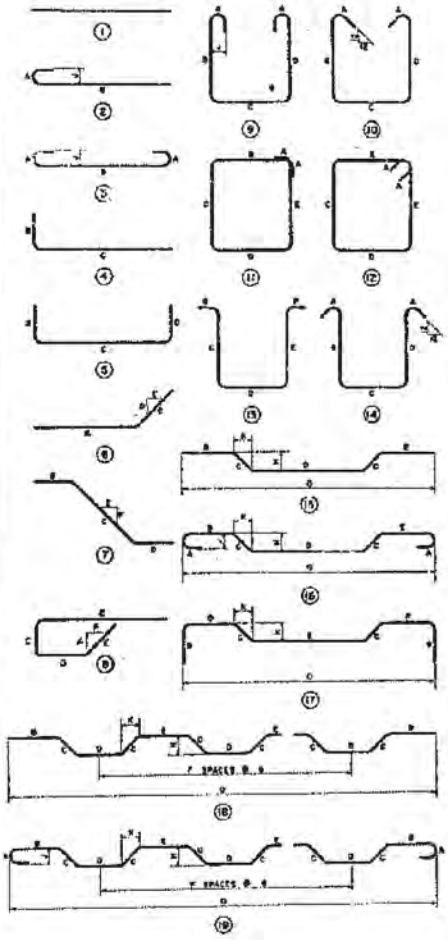


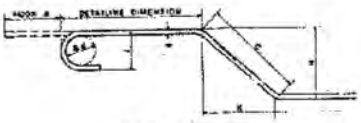


HOOK DETAIL

**FOR INFORMATION ONLY**

### GENERAL NOTES

1. All placing drawings, detailing, and fabrication shall be in accordance with the "Manual of Standard Practice for Detailing Reinforced Concrete Structures (ACI 315-57)".
2. All dimentions shown for bar bending details are out-to-out of bars.

DESIGN AND DRAWING BY
WESTERN ENGINEERS, INC. AND
EDWARDS AND KELCEY
CONSULTING ENGINEERS

SUBMITTED BY J. R. Henville
CHIEF ENGINEER
UTAH REGD. ENG. NO. 2164

REGISTERED PROFESSIONAL ENGINEER NO. 2164 J. R. HENVILLE STATE OF UTAH

SHEET 11 OF 12 SHEETS

UTAH STATE ROAD COMMISSION
SALT LAKE CITY, UTAH
BRIDGE DEPARTMENT

**NORTH LEHI INTERCHANGE**

191'-4½" O. TO O. 54" X ING ℄
STA 23+17.830 I-15+6.(x)1276
LEHI-PROVO UTAH COUNTY

DESIGNED BY ____ SCALE ____
DRAWN BY ____ ISSUED January 11, 1963
TRACED BY ____ APPROVED B. L. Sorensen
CHECKED BY ____ CHIEF BRIDGE ENGINEER

NO. NO. ____ DWG. NO. C-340

STRUCTURE I-A 14

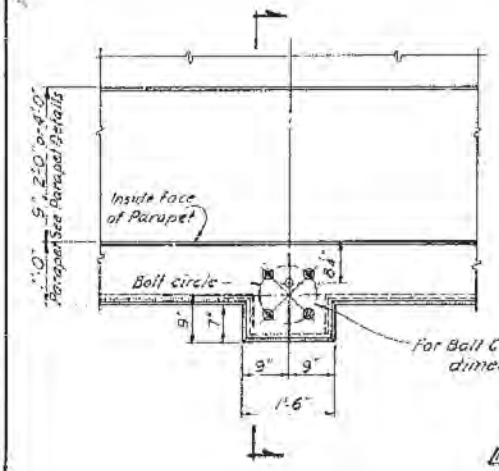


PLAN
(BRACKET "A")

| BOLT CIRCLE DIA. | ANCHOR BOLT SIZE |
|---|---|
| 15" | 1½"ø |

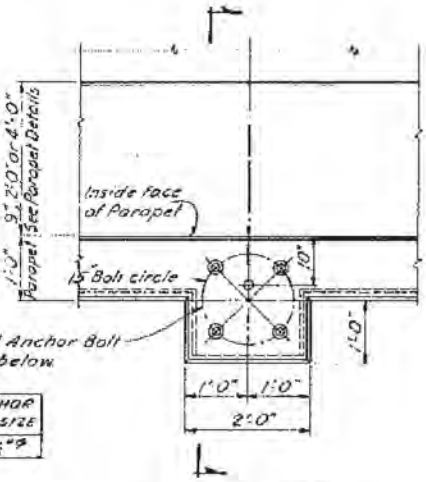


PLAN
(BRACKET "B")

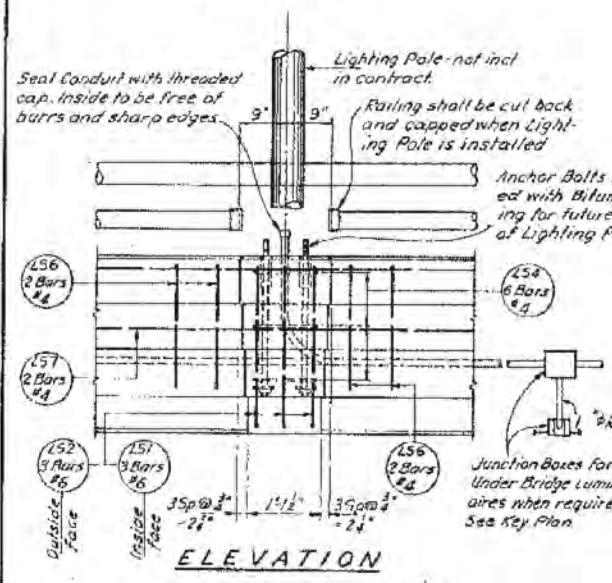


ELEVATION

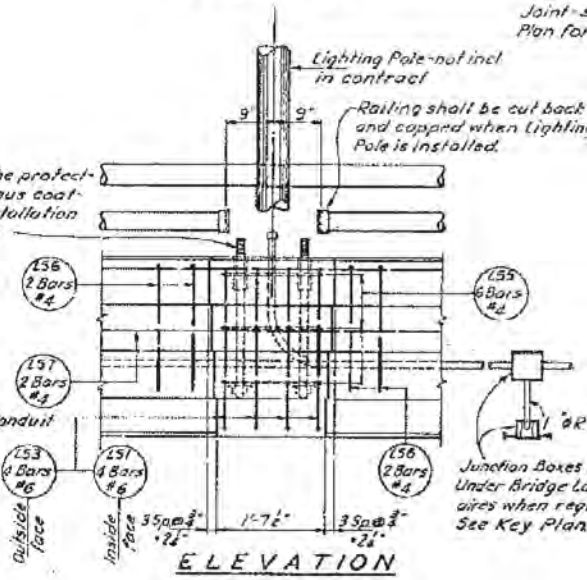


ELEVATION

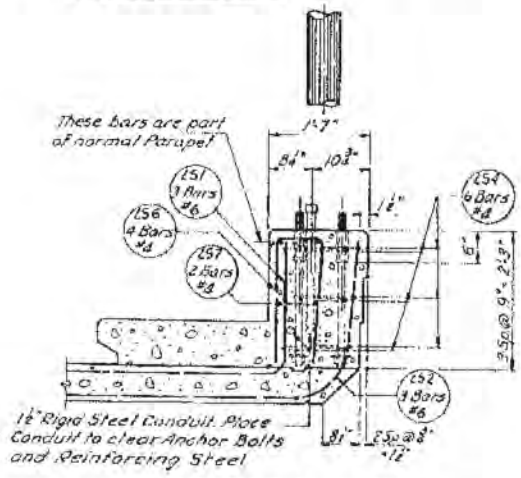


SECTION A-A

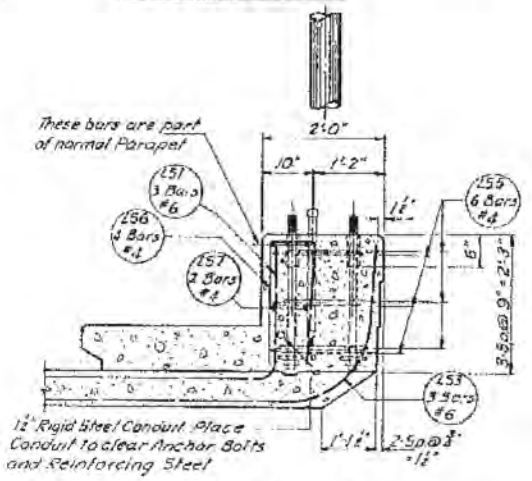


SECTION B-B

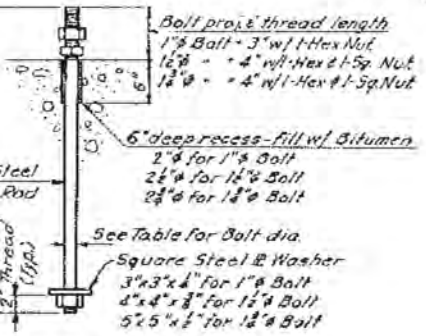


MOR BOLT DETAIL

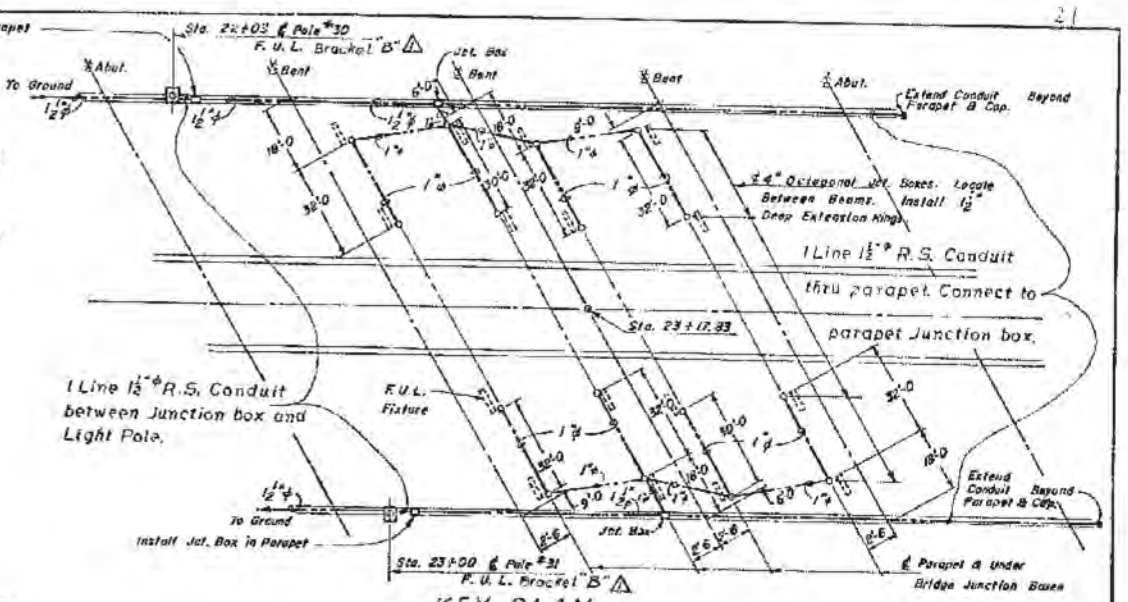


KEY PLAN
NOT TO SCALE

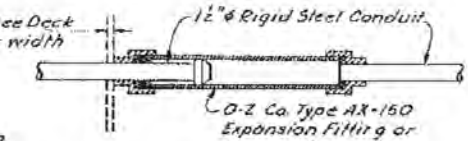


EXPANSION FITTING DETAIL

Note

Light Pole stationing, if shown, is approximate. Pole Mounting Bracket shall be located midway between railing posts nearest the station indicated. F.U.L. Fixtures 32'-0 C.to C. on Face of Concrete Bent Bond Beam With Hamset Studs or Equal For Attachment. Install Flexible Conduit From Deck Junction Box to Lighting Fixture. (F. U. L. - Fluorescent Understructure Lighting). Installation of F.U.L. Fixtures By Others.

STEEL SCHEDULE - POLE SUPPORT

| MARK | SIZE | LENGTH | AMT | SKETCH |
|---|---|---|---|---|
| LS1 | 6 | 5'-2" | | 2'-10" 1'-10" 4" R. |
| LS2 | 6 | 6'-1" | 6 | 3'-4" 11" R 2½" |
| LS3 | 6 | 6'-4" | 6 | 3'-4" 1'-5" R. 2½" |
| LS4 | 4 | 3'-3" | – | LS4 - 1'-1" LS5 - 1'-6" |
| LS5 | 4 | 4'-8" | 12 | |
| LS6 | 4 | 4'-11" | – | 2'-1" 12" |
| LS7 | 4 | 7'-0" | 4 | |

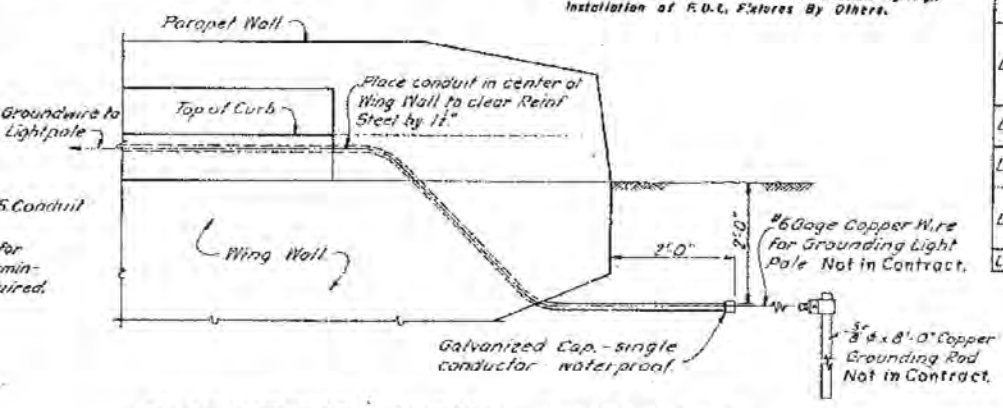


CONDUIT TERMINATION AT WING WALLS

GENERAL NOTES

1-Rigid Steel Conduit, threaded and galvanized, shall conform to Federal Specifications WW-C-581a.

2-Conduit Expansion Fittings shall be installed where ever conduit crosses structure expansion joints.

3-Conduit shall terminate at junction boxes with double lock nuts and insulated grounding type bushings. Bushings shall be O-Z Co. Type BL or approved equal. All conduit shall be bonded in boxes with bare #6 AWG Copper wire.

4-All work shall conform to the latest Edition of the National Electrical Code.

5-See Special Provisions for Electrical Work Bridges.

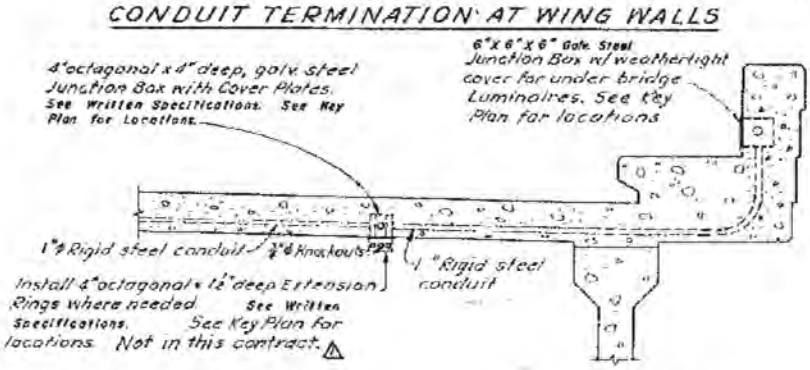


DETAILS FOR FUTURE SUSPENDED UNDERPASS LUMINAIRES

△ R&W 7-15-63 Bracket "A" To "B" 15.8 added

UTAH STATE DEPARTMENT OF HIGHWAYS
SALT LAKE CITY, UTAH
STRUCTURES DIVISION
LEHI TO PROVO
NORTH LEHI INTERCHANGE
ELECTRICAL WORK BRIDGES

| | | |
|---|---|---|
| DESIGNED BY | CHECKED BY | I-15-6(19)276 5th Co. |
| DRAWN BY U.H.O. | CHECKED BY | PROJECT NUMBER |
| QUANTITIES BY | CHECKED BY | 23 + 17.830 |
| ESTIMATE PREPARED BY | | SHEET LENGTH / SECTION |
| APPROVED DATE | CHIEF STRUCTURAL ENG. | UTAH COUNTY |
| SHT. NO. 1-A | DWG. NO. C-340 | 12 of 12 |

FOR INFORMATION ONLY

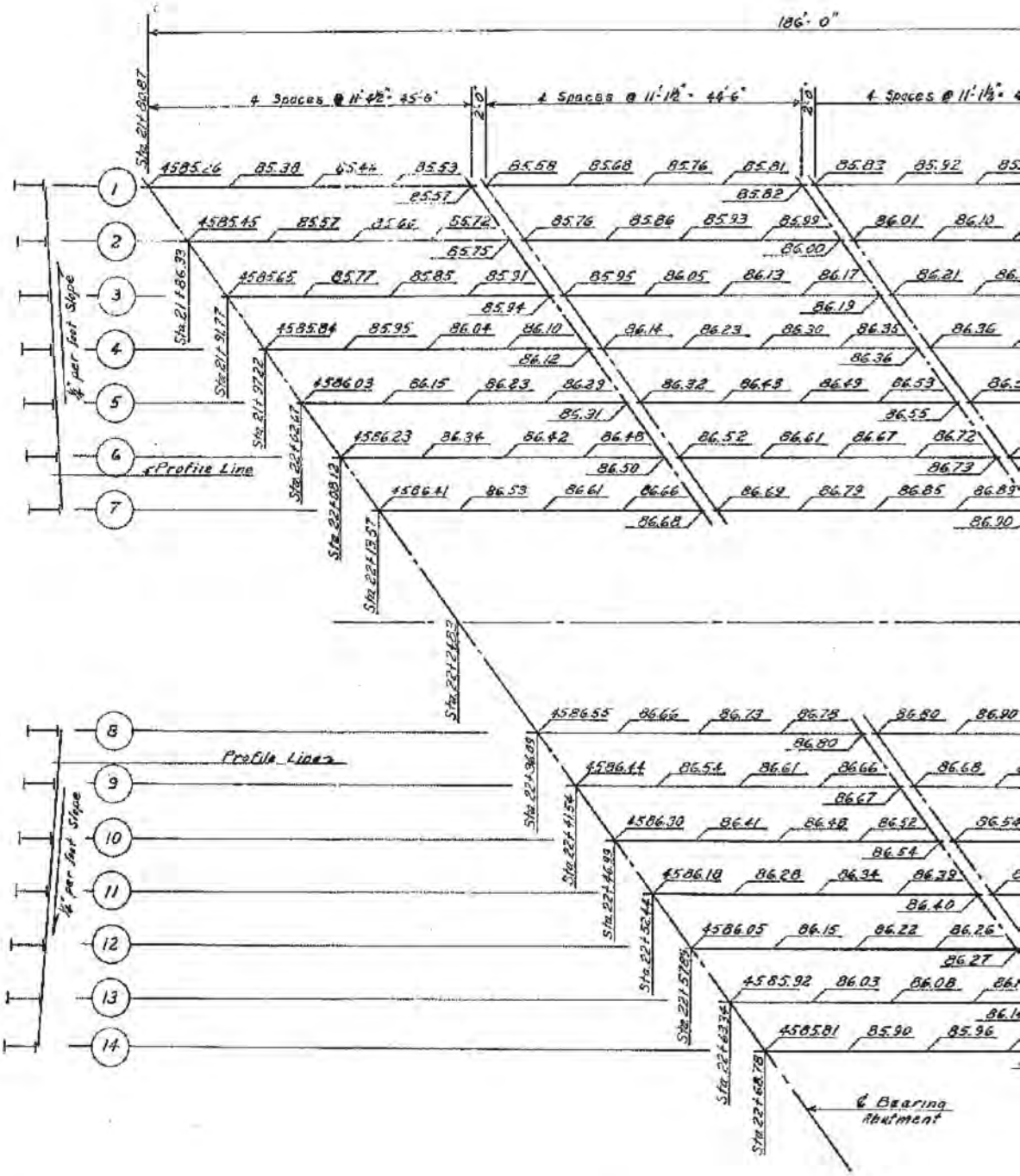


**FOR INFORMATION ONLY**

[redacted]

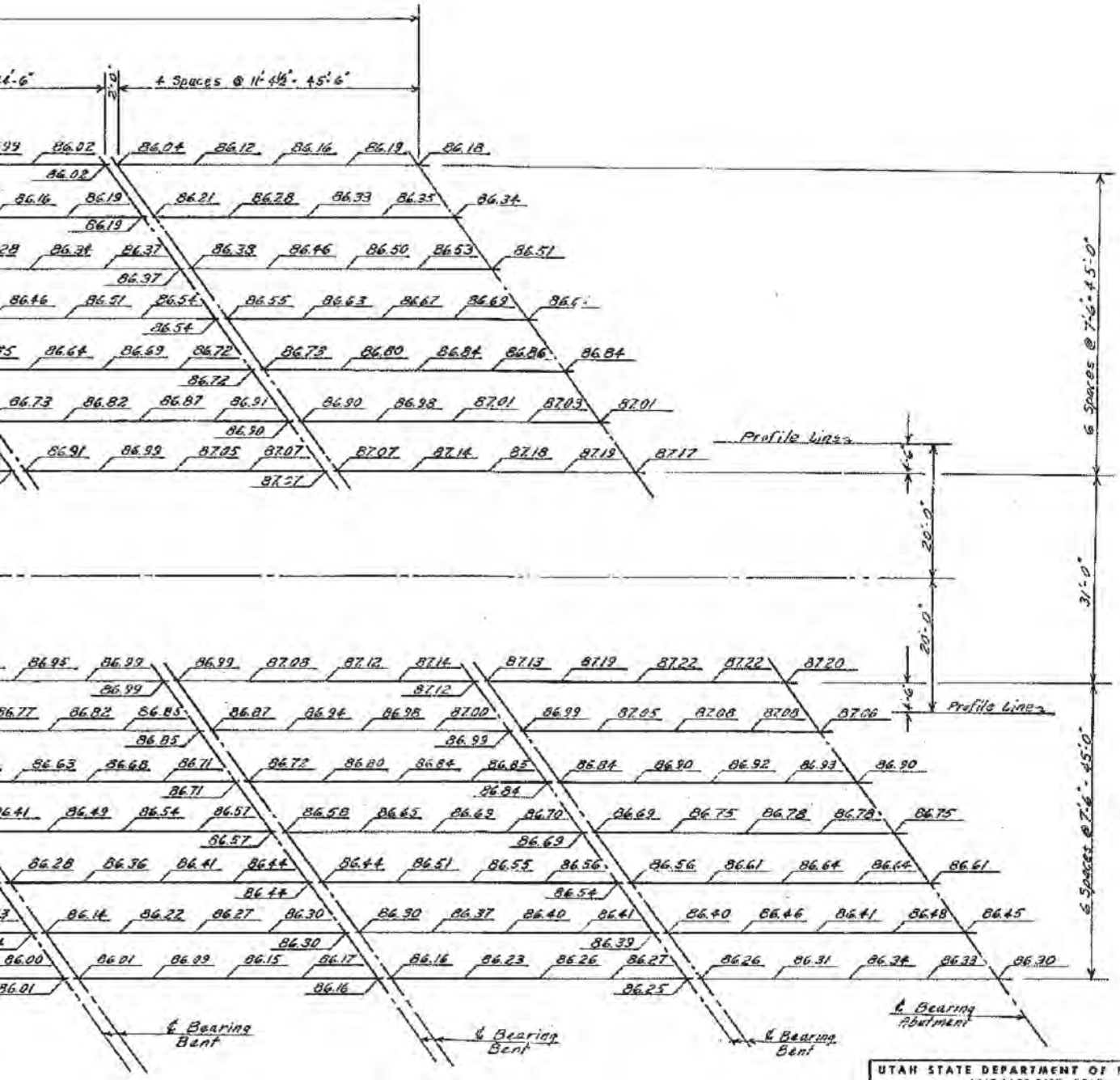


UTAH STATE DEPARTMENT OF HIGHWAYS
SALT LAKE CITY, UTAH
STRUCTURES DIVISION

LEHI - PROVO
NORTH LEHI INTERCHANGE
SCREED ELEVATIONS

| | | |
|---|---|---|
| DESIGNED BY | CHECKED BY C.S.W. | I-15-6(19)276 (PROJECT NUMBER) |
| DRAWN BY J.E.W. | CHECKED BY | 23+1783 (STATION) |
| QUANTITIES BY | CHECKED BY | UTAH (COUNTY) |
| APPROVED / RECOMMENDED BY | GROUP LEADER | |
| APPROVED January 11, 1963 (DATE) | D. L. Sargent, ENGR. STRUCTURES DIVISION | |
| BR. NO. | DRG. NO. C-340 | 12 of 12 |

| NO. | BY | DATE | REMARKS |
|---|---|---|---|
| | | | |

REVISIONS

5th Counter

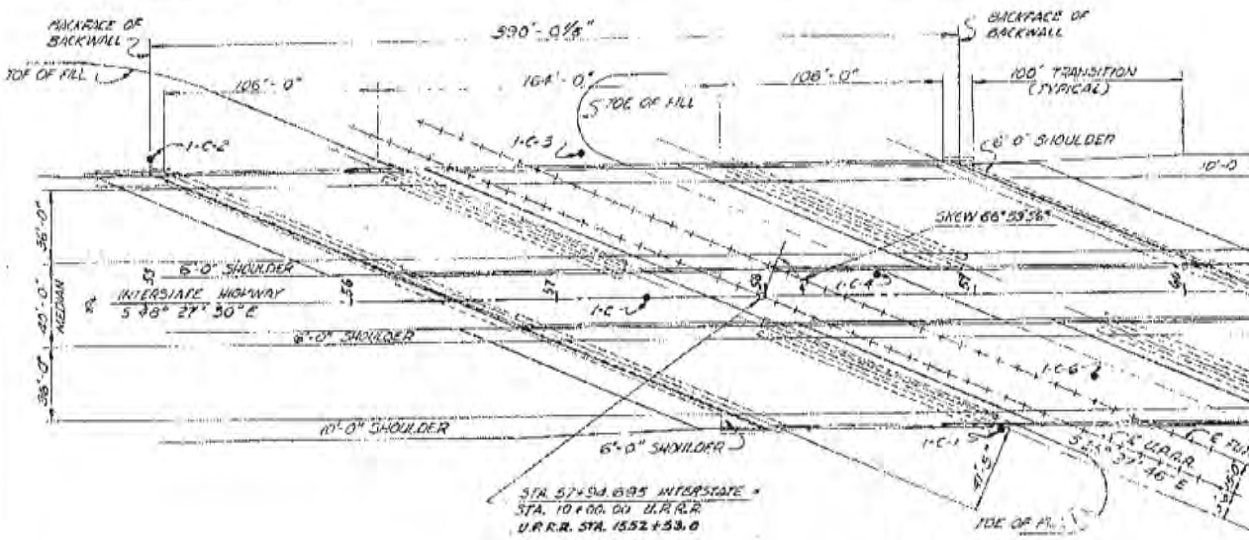


## KEY PLAN

SCALE: 1" = 40'-0"

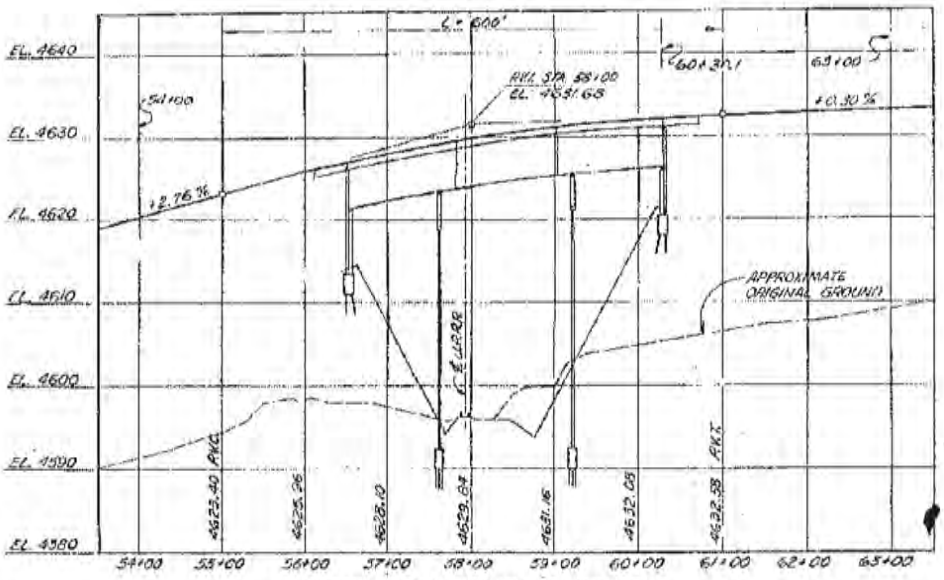


## INTERSTATE HIGHWAY PROFILE

SCALE: 1" = 10'-0" VERT.
1" = 100'-0" HORIZ.

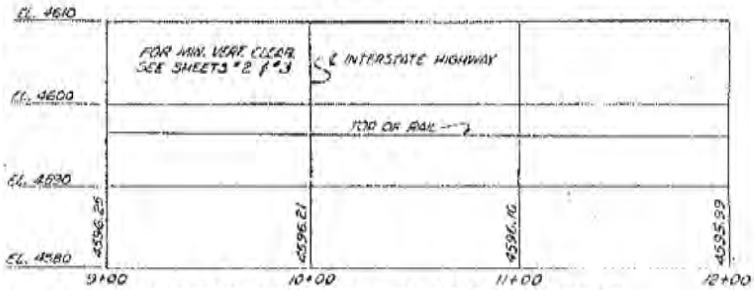


## PROFILE OF UNION PACIFIC RAILROAD

SCALE: 1" = 10'-0" VERT.
1" = 50'-0" HORIZ.

**DESIGN SPE**
A.A.S.H.

**CONSTRUCTIO**
Material
State Stand
and Supplem

**LIVE LOAD:**
H-20-S16
of 1961

**ALLOWABLE**
Structur
Reinforc
Fc Cost
Fc Ultim

**STRUCTURAL**
Unless
A-7. Structu

**CONCRETE:**
Class "A"

**REINFORCEME**
All reinf
to A.A.S.H.O
Designation

**CHAMFERS:**
Exposed

**FOUNDATION:**
Foundat
all piles shall

**DATUM:**
All eleva
Datum of 1

**BENCH MAR**

**SHOP DRAW**
All shop

DGN Files: TP PWPrelim\15721\4433-C-341-01-Form-Fo.dgn
02-MAY-2002

**FOR INFORMATION ONLY**

| FED. AID DIST. NO. | STATE | FED. AID PROJ. NO. | FISCAL YEAR | SHEET NO. | TOTAL SHEETS |
|---|---|---|---|---|---|
| U. T. | UTAH | | | | |

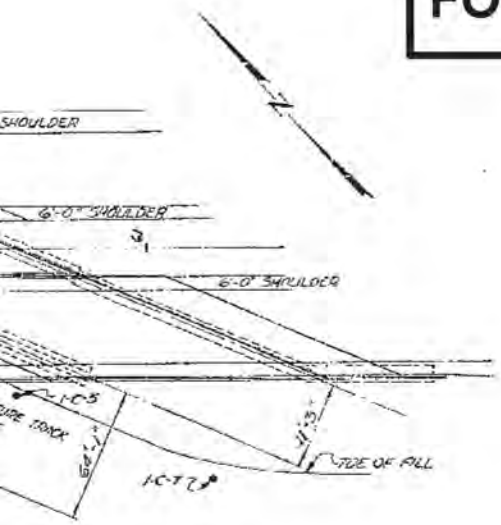


2 STRUCTURES

## ESTIMATE OF QUANTITIES

| NO. | ITEM | QUANTITY | As Constr. |
|---|---|---|---|
| | EXCAV. FOR STRUCTURES (UNCLASS) | 2,221 Cu. Yd | 3622.80 |
| | CLASS A CONCRETE (AE) | 3075 Cu. Yd | 3090.7 |
| | REINFORCING STEEL | 641300 Lb. | |
| | STRUCTURAL STEEL | 1635000 Lb | 1,718,627 |
| | FURNISH PILE DRIVING EQUIPMENT | Lump Sum | |
| | TEST PILE | 115 Lin. Ft. | 72.3 |
| | LOAD TESTING | 2 EACH | 1 |
| | PILE (OTHER THAN TIMBER) | 19975 Lin. Ft. | 11,732.2 |
| | METAL RAILING .. (SINGLE RAIL) | 1,790 Lin. Ft. | 1,782.7 |
| | 3" RIGID STEEL CONDUIT | 939 Lin. Ft. | |
| | MECHANICAL TAMPING | 155 HR | 203 |
| | ELECTRICAL WORK BRIDGES | 1 Lump | OMIT. CONTR. TO PAY ALONG WITH CHURCH BRIDGE |

## STANDARD DRAWINGS

| SHEET NO. | DESCRIPTION |
|---|---|
| ST-1 | RAILING DETAILS |
| ST-3 | PILE DETAILS |
| ST-4 | DRAIN DETAILS |
| ST-5 | STANDARD LIGHTING DETAILS |
| MR-1 | METAL RAILING |

## INDEX OF SHEETS


| SHEET NUMBER | DESCRIPTION |
|---|---|
| 1 | KEY PLAN & INDEX SHEET |
| 2 | DECK PLAN |
| 3 | ELEVATION & APPROACH SLAB |
| 4-5 | BORING LOGS |
| 6 | FOUNDATION PLAN |
| 7 | ABUTMENT NO. 1 PLAN |
| 8 | ABUTMENT NO. 1 ELEVATION |
| 9 | ABUTMENT NO. 1 DETAILS |
| 10 | ABUTMENT NO. 4 PLAN |
| 11 | ABUTMENT NO. 4 ELEVATION |
| 12 | ABUTMENT NO. 1 & 4 DETAILS |
| 13 | ABUTMENT NO. 1 & 4 DETAILS |
| 14 | PIERS NO'S. 2N, 2S, 3N, 3S |
| 15 | FRAMING PLAN |
| 16 | GIRDERS |
| 17 | GIRDER DETAILS |
| 18 | TRANSVERSE SECTION & DECK SLAB |
| 19 | MISCELLANEOUS DETAILS |
| 20-22 | REINFORCING SCHEDULE |
| 23-24 | SCREED ELEVATIONS |
| 24a | ELECTRICAL WORK BRIDGES |


## GENERAL NOTES

**CIFICATIONS:**
O. Standard Specifications for Highway Bridges, 1961 Edition, and revisions.

**ON SPECIFICATIONS:**
s, construction and workmanship shall be in accordance with the
ard Specifications for Road and Bridge Construction, 1960 Edition
nts thereto which are in effect at the date of request for bids.

-44 Interstate Alternate loading in accordance with A.A.S.H.O. Specifications

**STRESSES:**

| | |
|---|---|
| al Steel | 18,000 p.s.i. |
| ng Steel | 20,000 p.s.i. |
| -in-Place Concrete in Compression | 1,200 p.s.i. |
| nate Compressive Strength | 3,000 p.s.i. |

**STEEL:**
otherwise noted, structural steel shall conform to A.S.T.M. Designation
al steel for girders shall conform to A.S.T.M. Designation-A 373 or A-36

concrete with Type II Low Alkali cement shall be used throughout.

**NT:**
rcing steel bars shall be new billet steel, intermediate grade conforming
esignation M-31 and shall have deformations conforming to A.A.S.H.O.
M-137

l corners at joint filler and open joints to be beveled ¾" or rounded.

ions may be altered, if necessary, to suit conditions encountered in construction.
be driven full length using air, steam, or diesel hammer and pre-coring if necessary.

tions refer to United States Coast and Geodetic Survey Mean Sea Level
.34.

**RK:**

**INGS:**
drawings shall be approved before fabrication of steel.

## KEY PLAN & INDEX SHEET

| NO. | BY | DATE | REMARKS |
|---|---|---|---|
| | | | REVISIONS |

DESIGN AND DRAWING BY
WESTERN ENGINEERS, INC. AND
EDWARDS AND KELCEY
CONSULTING ENGINEERS

SUBMITTED BY: H. Jack Edwards, CHIEF ENGINEER
UTAH ENGR. LIC. NO. 2388

SHEET 1 OF 24 SHEETS

UTAH STATE ROAD COMMISSION
SALT LAKE CITY, UTAH
BRIDGE DEPARTMENT

INTERSTATE OVER
UNION PACIFIC R. R.
390'-0½" O. TO O. 67° X ING L
STA. 57+94.70 16-15-6 (2) 277
LEHI-PROVO UTAH COUNTY

DESIGNED BY B.S.R. SCALE AS SHOWN
DATE JUNE 11, 1963
DRAWN BY G.W.
TRACED BY G.W.
CHECKED BY B.K.
APPROVED D.L. Sorensen, CHIEF BRIDGE ENGINEER

DR. NO.
DWG. NO. C-341

FINAL 1-26-65

STRUCTURE 1-C

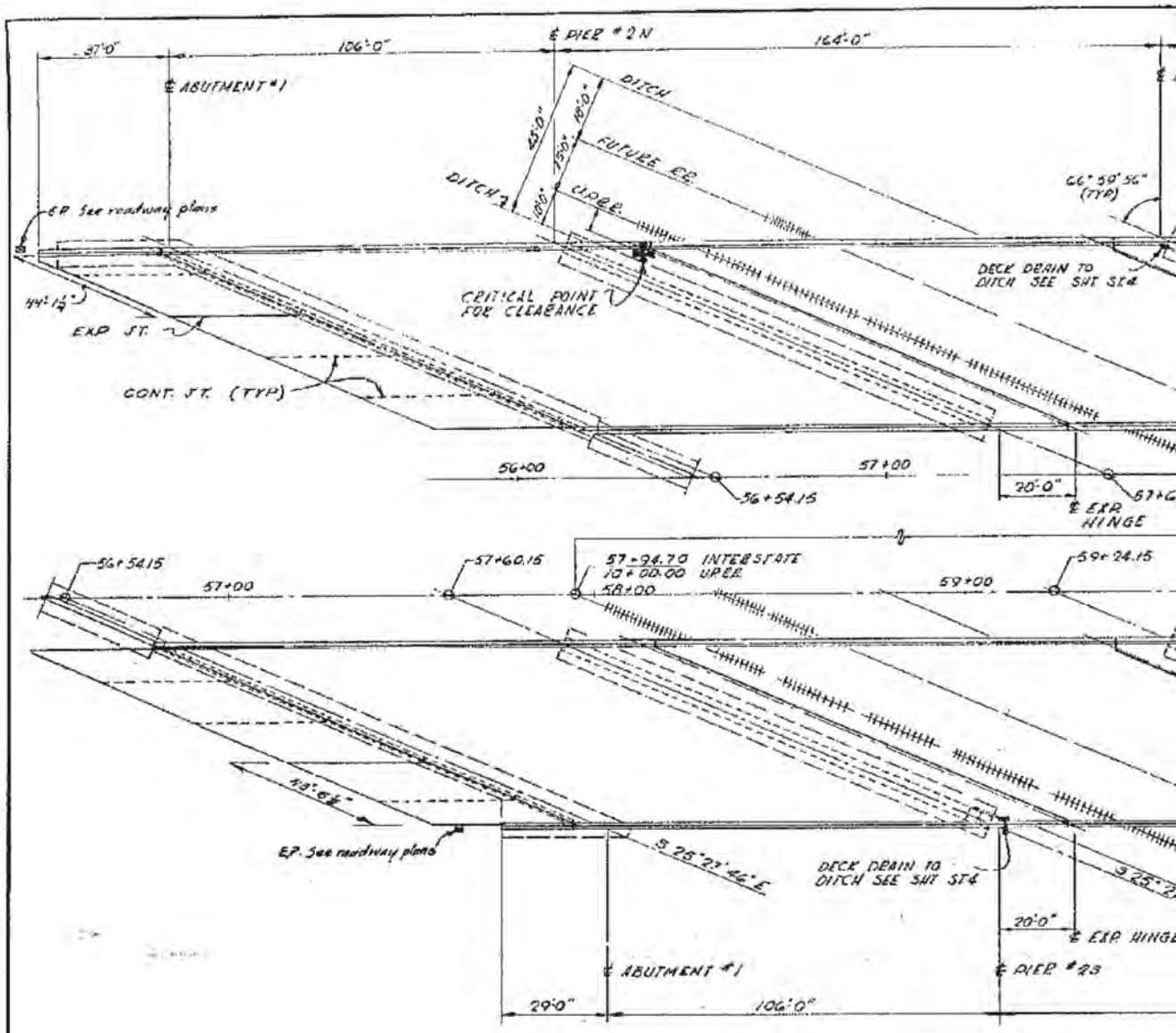


DECK

SCALE

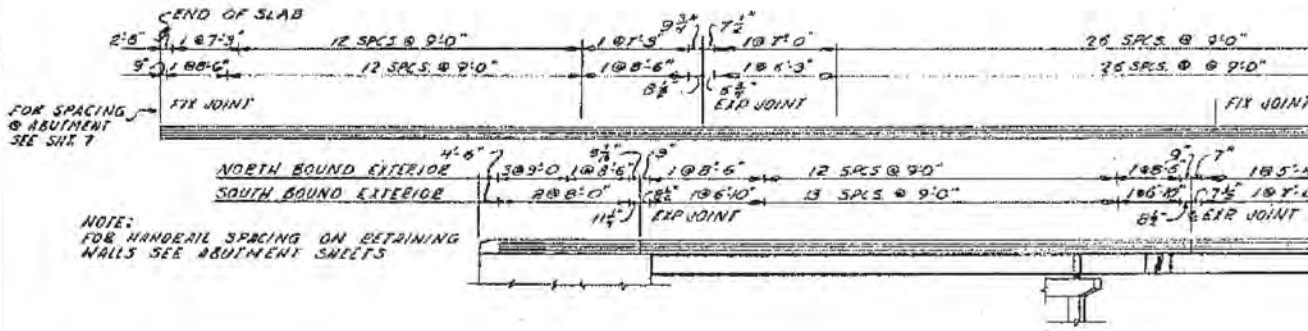


HANDRAIL SPACING

| FED. ROAD DIST. NO. | STATE | FED. AID PROJ. NO. | [illegible] | [illegible] | [illegible] |
|---|---|---|---|---|---|
| U. T. | UTAH | | | | |

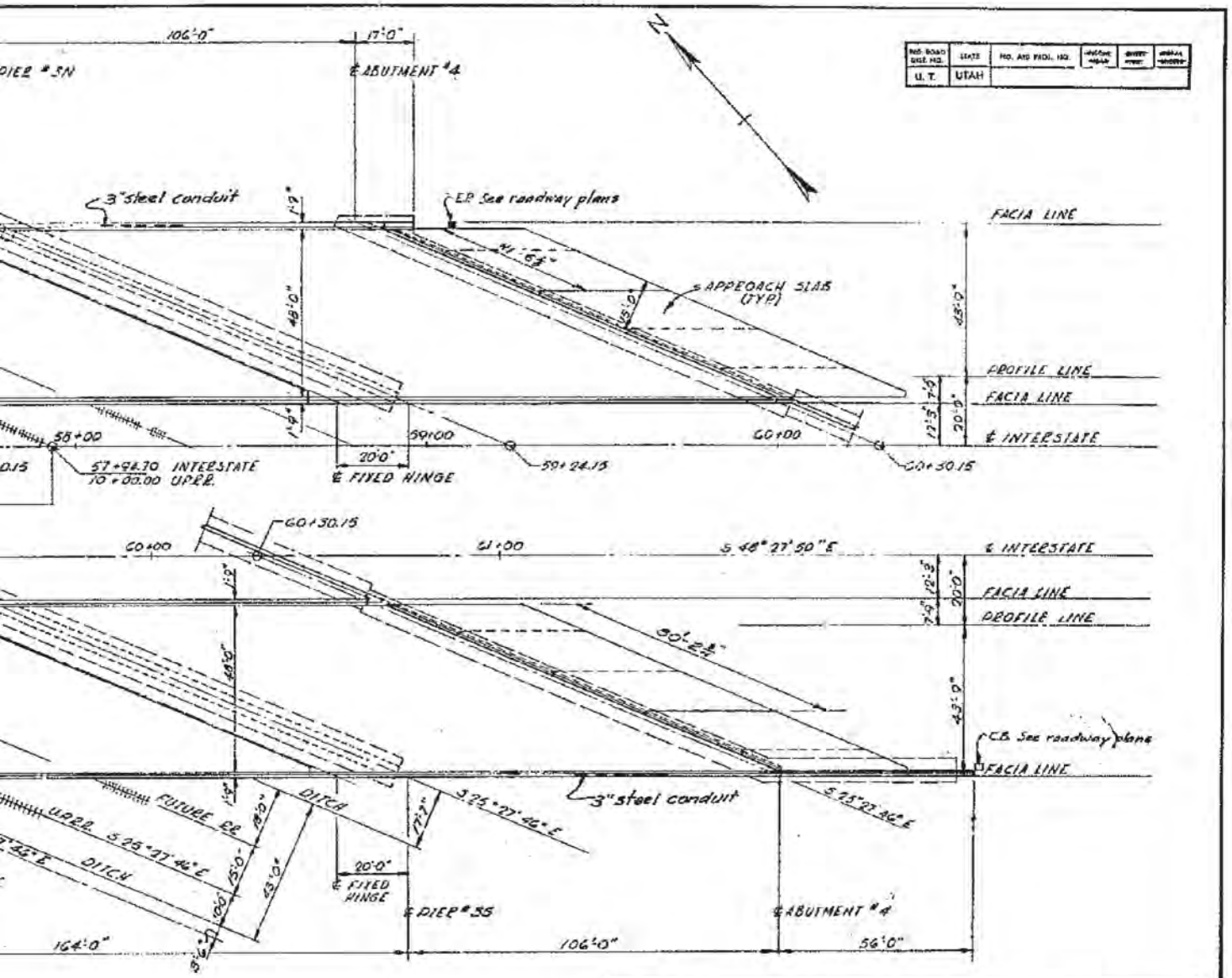


PLAN
1" = 20'

**FOR INFORMATION ONLY**

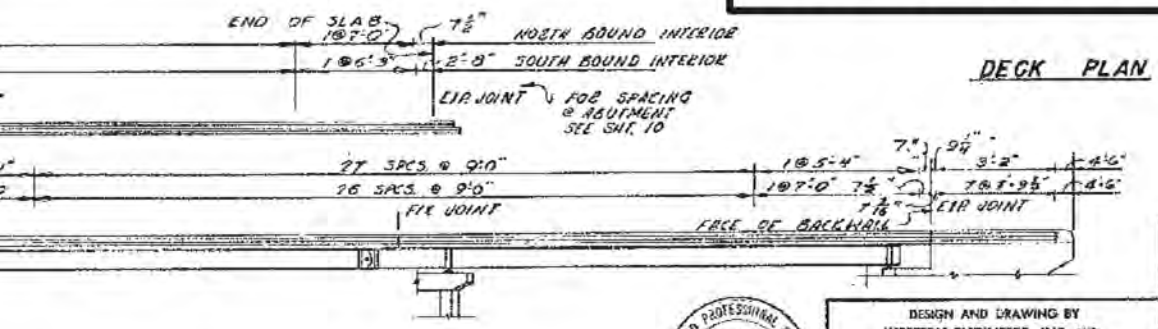


DECK PLAN

| NO. | BY | DATE | REMARKS |
|---|---|---|---|
| | | | REVISIONS |

REGISTERED PROFESSIONAL ENGINEER NO. 2388 H. JACK LEONARD STATE OF UTAH

DESIGN AND DRAWING BY
WESTERN ENGINEERS, INC. AND
EDWARDS AND KELCEY
CONSULTING ENGINEERS

SUBMITTED BY H. Jack Leonard CHIEF ENGINEER
UTAH ENGR. INC. NO. 2-388

SHEET 2 OF 24 SHEETS

UTAH STATE ROAD COMMISSION
SALT LAKE CITY, UTAH
BRIDGE DEPARTMENT

INTERSTATE OVER
UNION PACIFIC R. R.
390'-0 7/8" O. TO O. 67" X INS. I.
STA. 57+94.70 IG-15-6(10)317 3rd Contr.
LEHI-PROVO UTAH COUNTY

| | |
|---|---|
| DESIGNED BY RSE | SCALE 1" = 20' |
| DRAWN BY RE | ISSUED [illegible] |
| TRACED BY RE | APPROVED [illegible] |
| CHECKED BY GEW 2-23-68 | CHIEF BRIDGE ENGINEER |
| NO. | STD. NO. C-341 |
| NO. | |

STRUCTURE I-C

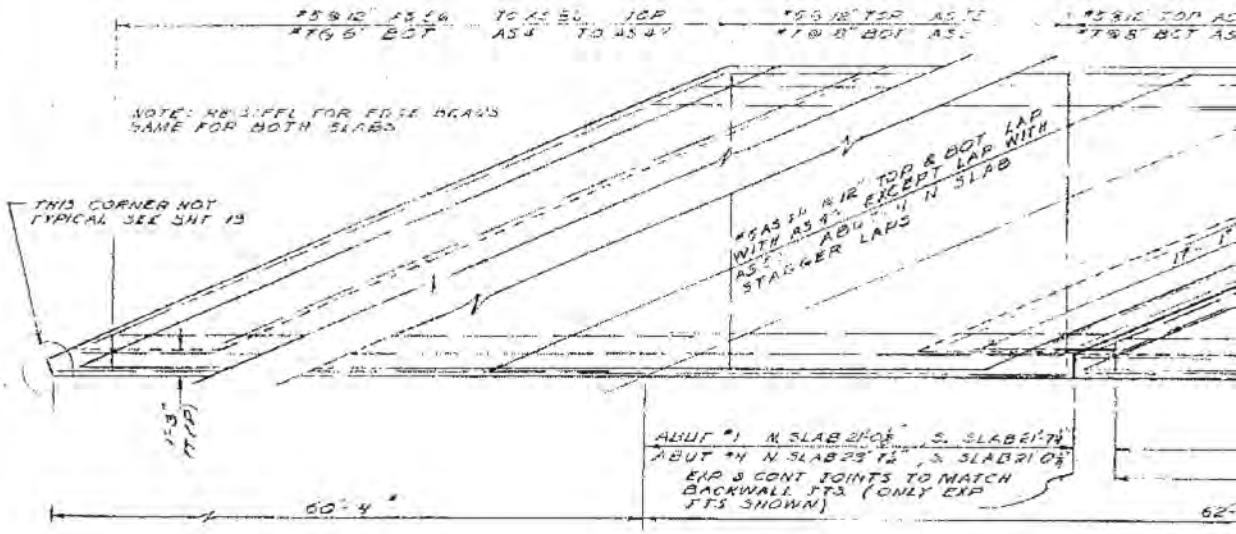


## APPROACH SLAB
SCALE: 1/4" = 1'-0"

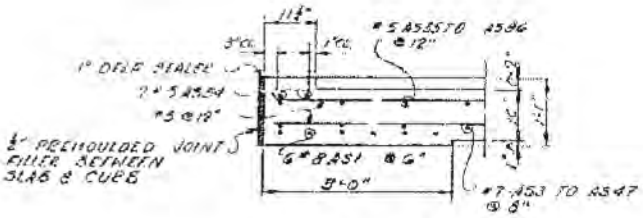


## SECTION B-B
SCALE: 3/4" = 1'-0"

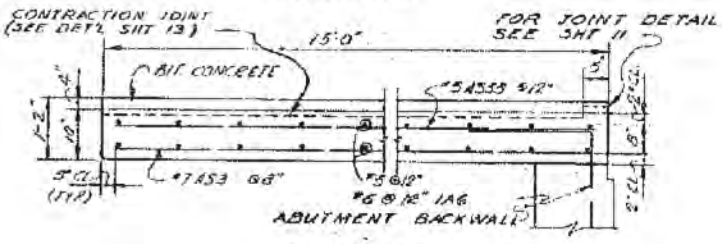


## SECTION A-A
SCALE: 3/4" = 1'-0"

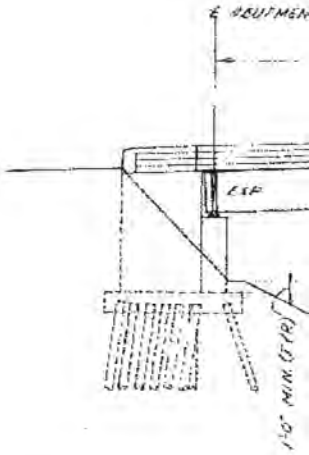


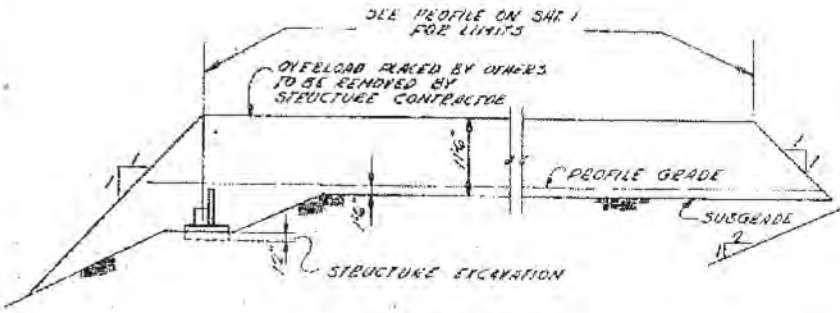


## ROADWAY EXCAVATION
NO SCALE

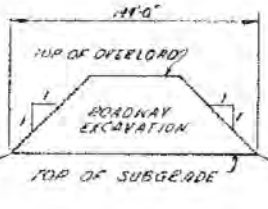


## OVERLOAD SECTION
NO SCALE

DGN Files IP_PWPubres\16724\4433.C-041-03_Ferninfoodon
02-MAY-2005

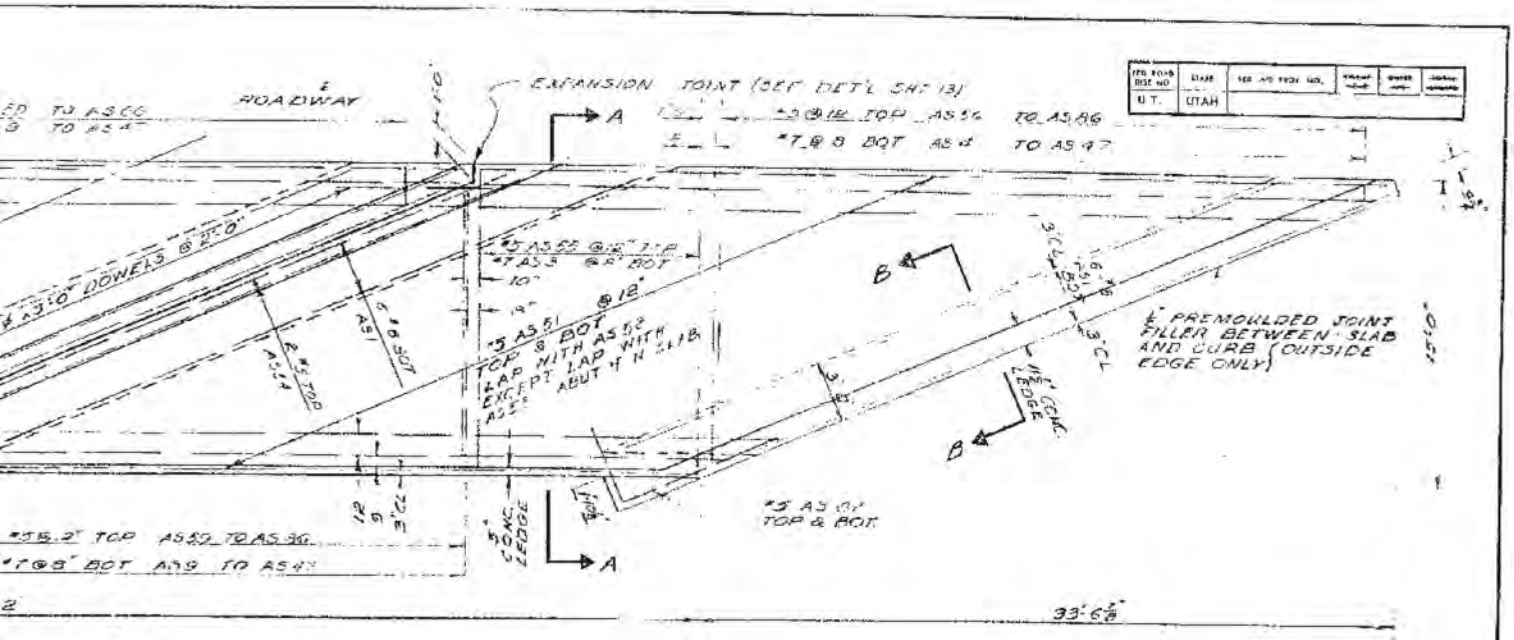


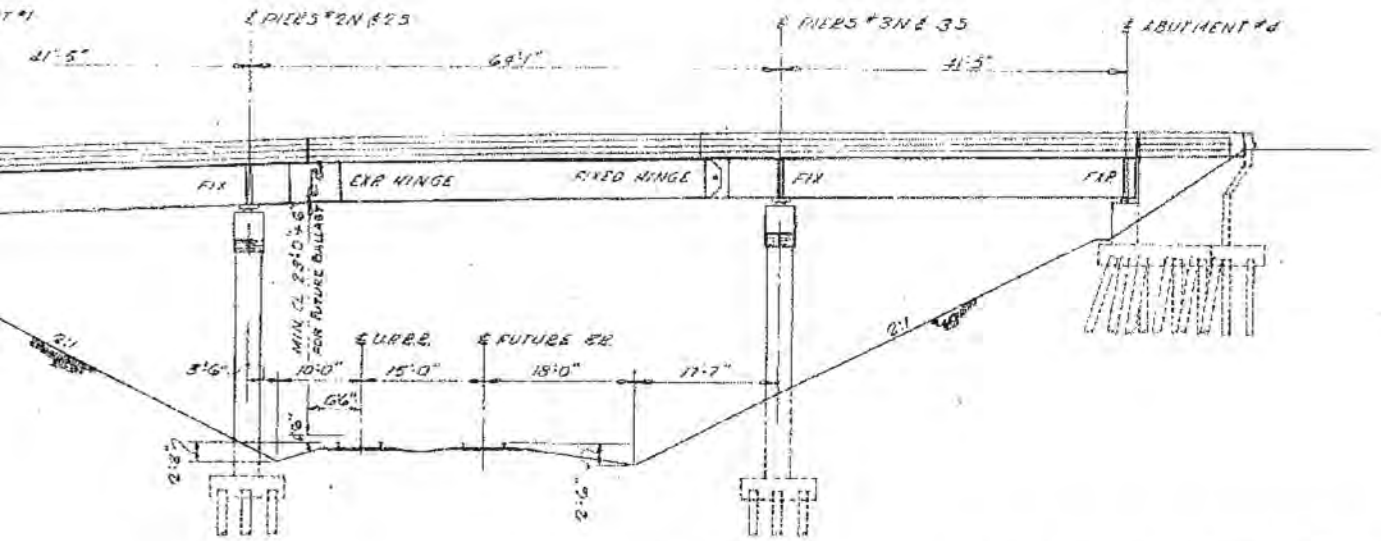


SQUARE LONGITUDINAL ELEVATION

SCALE 1" = 10'

ELEVATION AND APPROACH SLAB

SHEET 3 OF 24 SHEETS

UTAH STATE ROAD COMMISSION
SALT LAKE CITY, UTAH
BRIDGE DEPARTMENT

INTERSTATE OVER
UNION PACIFIC R.R.
390'-0 7/8" O. TO O. 67° X ING'L
STA. 571+94.70 IC-15-5(71)247
LEHI-PROVO UTAH COUNTY

DESIGNED BY A.R. SCALE
DRAWN BY R.L.R.L. DATE June 11, 1963
TRACED BY R.L.R.L. APPROVED
CHECKED BY B.K. CHIEF BRIDGE ENGINEER

DESIGN AND DRAWING BY
WESTERN ENGINEERS, INC. AND
EDWARDS AND KELCEY
CONSULTING ENGINEERS

SUBMITTED BY CHIEF ENGINEER
UTAH ENGR. INC. NO. 2388

PROJ. NO. STD. NO. C-341

STRUCTURE 1-C

**FOR INFORMATION ONLY**

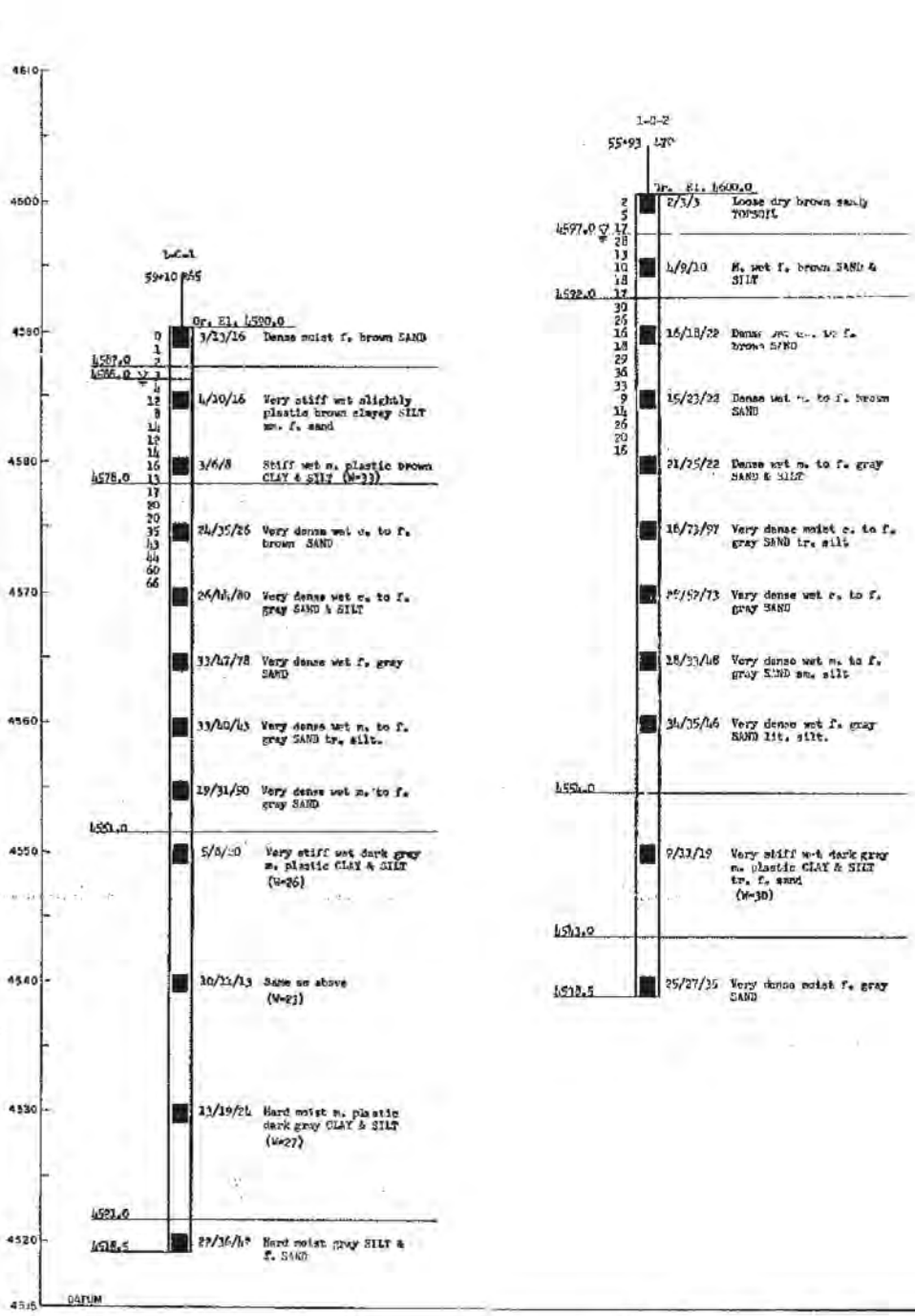


FOR INFORMATION ON

DGN Files TPL PW Bridges\1672\4431-C-041-04-Forest\Boom
02-MAY-2005

| FED. ROAD DIST. NO. | STATE | FED. AID PROJ. NO. | PROJECT NO. | SHEET NO. | TOTAL SHEETS |
|---|---|---|---|---|---|
| U. T. | UTAH | | | | |

26.0
M. dry brown sandy TOPSOIL

Very dense dry brown sandy TOPSOIL

Very dense moist f. brown SAND & SILT lit. gravel

Dense moist f. brown SAND

Dense wet f. brown SAND lit. silt

Very dense wet c. to f. brown SAND & GRAVEL

Dense moist c. to f. brown SAND & GRAVEL

Very dense dry c. to f. cemented gray SAND

Very dense moist f. gray SAND sm. silt

Same as above

Dense wet f. gray SAND & SILT

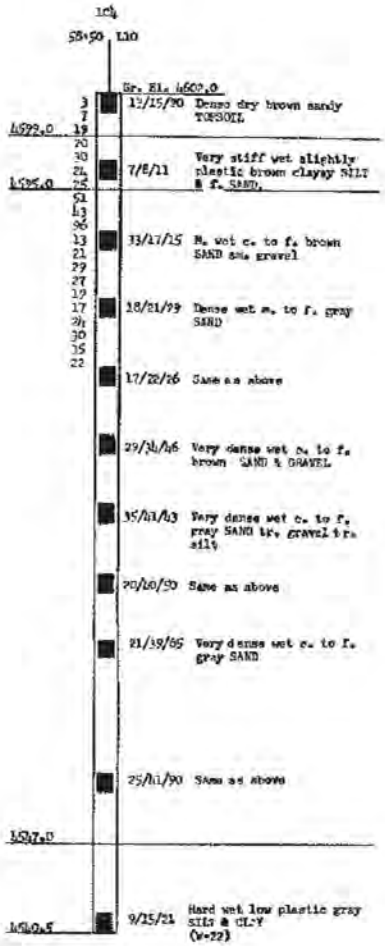


## LEGEND

Boring No. — 1-A-1

Interstate Station — 22+63 — R72 — Offset

Ground Elevation — Gr. El. 4562

Ground Water Table Elevation 4567.1 (?)

Number of Blows Used to drive casing 12 inches with 300 lb. hammer falling 2 ft. (Typical)

Strata Change Elevation — 4550 (Typical)

Boring Advanced Without Casing

Location of Sample (Typical) — 4539

Bottom of Boring Elevation — 4535.5

Number of Blows Used to drive 1-3/8" I.D. sampler with 140 lb. hammer falling 30 inches — 1st. 6 inches, 2nd. 6 inches, 3rd. 6 inches

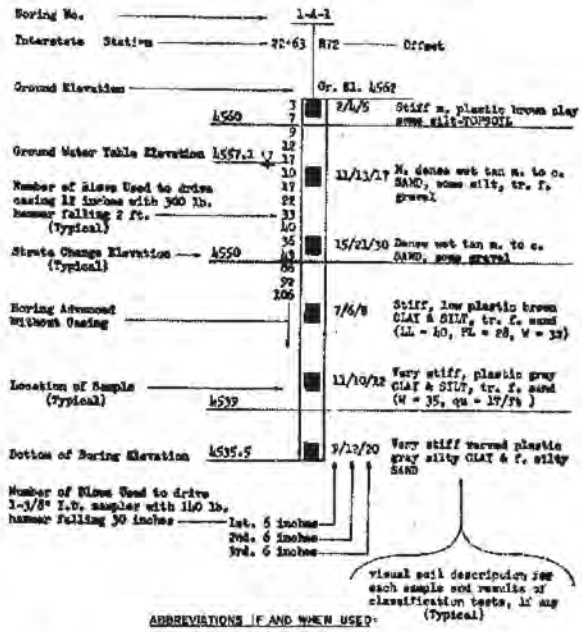


visual soil description for each sample and results of classification tests, if any (Typical)

ABBREVIATIONS IF AND WHEN USED:

br. = brown
gr. = gray
org. = organic
f. = fine
v. f. = very fine
m. = medium
c. = coarse
sm. = some
tr. = trace
lit. = little
LL = Liquid Limit in %
PL = Plastic Limit in %
W = Natural Moisture Content in %
qu = Unconfined compression test from pocket penetrometer in T/ft.

## BORING LOGS

ILY

DESIGN AND DRAWING BY
WESTERN ENGINEERS, INC. AND
EDWARDS AND KELCEY
CONSULTING ENGINEERS

SUBMITTED BY H. Jack Howard, CHIEF ENGINEER
UTAH ENGR. LIC. NO. 2588

REGISTERED PROFESSIONAL ENGINEER NO. 2588 H. JACK HOWARD STATE OF UTAH

SHEET 4 OF 24 SHEETS

UTAH STATE ROAD COMMISSION
SALT LAKE CITY, UTAH
BRIDGE DEPARTMENT

INTERSTATE OVER
UNION PACIFIC R.R.
390'-0¾" O. TO O. 67"X 1NG / 8½ Conc.
STA. 574+94.70 (G-15-5(20) 277
LEHI-PROVO UTAH COUNTY

DESIGNED BY E.S.K. SCALE AS SHOWN
DRAWN BY E.S.K.
TRACED BY E.S.K.
CHECKED BY A.S.K.

NO. C-341

STRUCTURE I-C

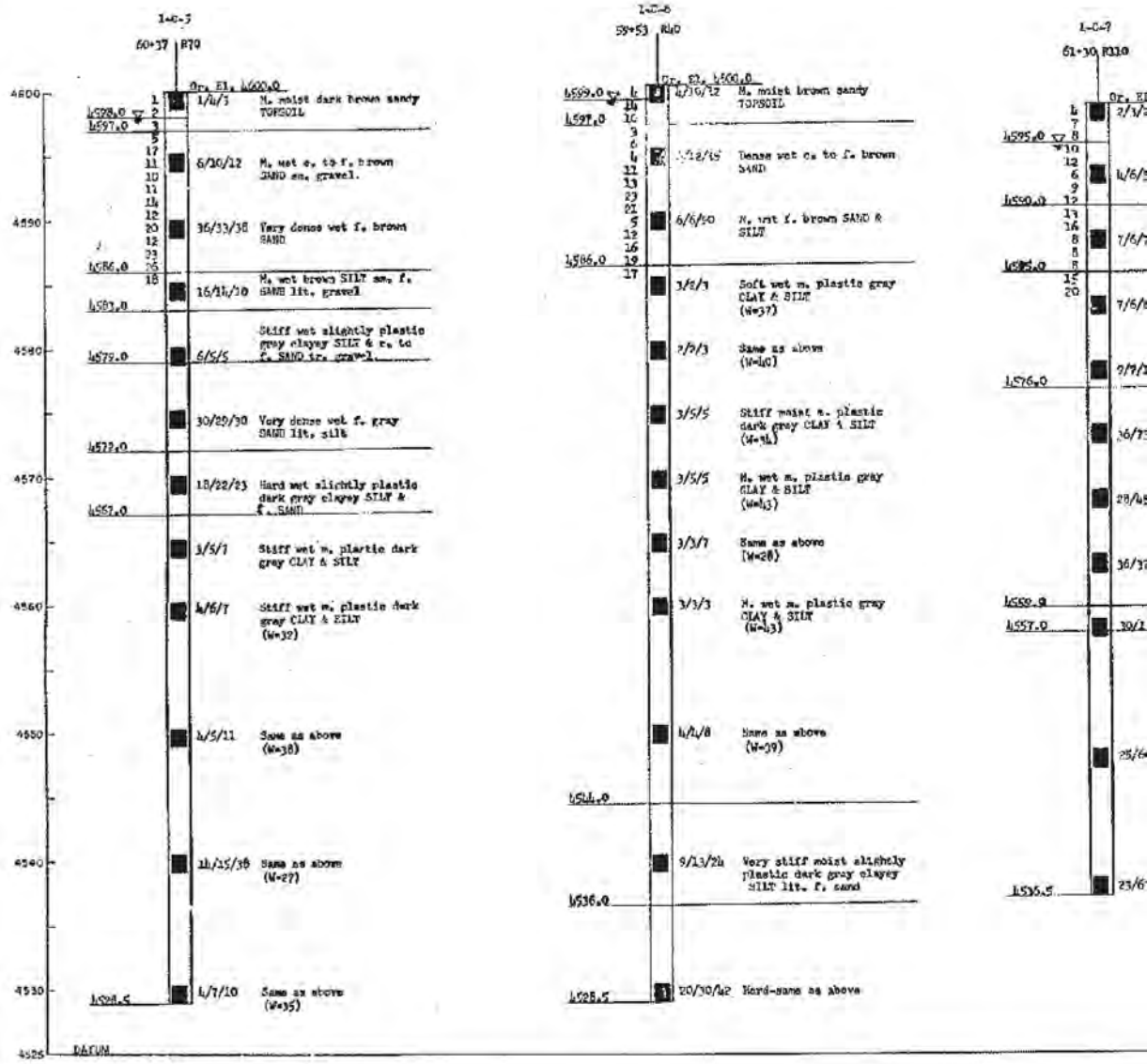


**FOR INFORMATION ONLY**

| FED. ROAD DIST. NO. | STATE | FED. AID PROJ. NO. | SHEET NO. | TOTAL SHEETS |
|---|---|---|---|---|
| U.T. | UTAH | | | |

. 4598.0
Loose moist brown sandy TOPSOIL, few roots

Same as above

M. wet, tan f. SAND & SILT

Stiff m. plastic wet tan CLAY & SILT (W=28)

2 Stiff low plastic moist gray SILT & CLAY (W=20)

/94 Very dense moist gray f. to c. SAND some f. to m. gravel

/92 Same as above

/58 Same as above.

/74 Very dense moist black v. f. SAND & SILT

/72 Very dense moist gray black f. to c. SAND

/69 Same as above

1-C

57+40 %

Gr. El. 4596.0

F. SAND lit. silt lit. f. to m. gravel

4591.6 ▽

/11/13 M. dry light brown f. to c. SAND lit. f. gravel

/5/5 M. moist lt. brown m. to c. SAND lit. f. gravel

4584.0

4582.0 F. to m. GRAVEL

/4/4 Loose wet brown varved layers of f. SAND lit. silt and brown CLAY.

4576.0

/10/12 M. moist gray f. to m. GRAVEL and m. to c. SAND

/14/24 M. moist gray m. SAND some m. gravel

4564.5

/17/22 M. moist gray f. to c. SAND lit. silt with f. sand, lit. f. gravel

## LEGEND

Boring No. — 1-A-1

Interstate Station — 22+63 272 — Offset

Ground Elevation — Gr. El. 4562

4560 — 3, 7, 9 — 2/1/5 Stiff m. plastic brown clay some silt-TOPSOIL

Ground Water Table Elevation — 4557.1 ▽ — 12, 17, 10

Number of Blows Used to drive casing 12 inches with 300 lb. hammer falling 2 ft. (Typical) — 17, 22, 33, 40

11/13/17 M. dense wet tan m. to c. SAND, some silt, tr. f. gravel

Strata Change Elevation (Typical) — 4550 — 36, 41, 86, 92, 106

15/21/30 Dense wet tan m. to c. SAND, some gravel

Boring Advanced Without Casing

7/6/6 Stiff, low plastic brown CLAY & SILT, tr. f. sand (LL = ND, PL = 28, W = 32)

Location of Sample (Typical) — 4539

11/10/12 Very stiff, plastic gray CLAY & SILT, tr. f. sand (W = 35, qu = 17/ft )

Bottom of Boring Elevation — 4535.5

9/12/20 Very stiff varved plastic gray silty CLAY & f. silty SAND

Number of Blows Used to drive 1-3/8" I.D. sampler with 140 lb. hammer falling 30 inches — 1st. 6 inches, 2nd. 6 inches, 3rd. 6 inches

visual soil description for each sample and results of classification tests, if any (Typical)

ABBREVIATIONS IF AND WHEN USED:

br. = brown
gr. = gray
org. = organic
f. = fine
v. f. = very fine
m. = medium
c. = coarse
sm. = some
tr. = trace
lit. = little
LL = Liquid Limit in %
PL = Plastic Limit in %
W = Natural Moisture Content in %
qu = Unconfined compression test from pocket penetrometer in T/ft.

# BORING LOGS

SHEET 5 OF 24 SHEETS

UTAH STATE ROAD COMMISSION
SALT LAKE CITY, UTAH
BRIDGE DEPARTMENT

INTERSTATE OVER
UNION PACIFIC R.R.
390'-0¾" O. TO O. 67° X NG L
STA. 57+94.70 IG-15-6(20) 277
LEHI-PROVO UTAH COUNTY

DESIGNED BY F.E.K. SCALE AS SHOWN
DRAWN BY E.E.K. DATE Jan. 11, 1963
TRACED BY E.E.K. APPROVED D.L. Sorensen
CHECKED BY E.E.K. CHIEF BRIDGE ENGINEER

No. DWG. No. C-341

STRUCTURE 1-C

REGISTERED PROFESSIONAL ENGINEER NO. 2388 H. JACK LEONARD STATE OF UTAH

DESIGN AND DRAWING BY
WESTERN ENGINEERS, INC. AND
EDWARDS AND KELCEY
CONSULTING ENGINEERS

SUBMITTED BY H. Jack Leonard
CHIEF ENGINEER
UTAH ENG. LIC. NO. 2388

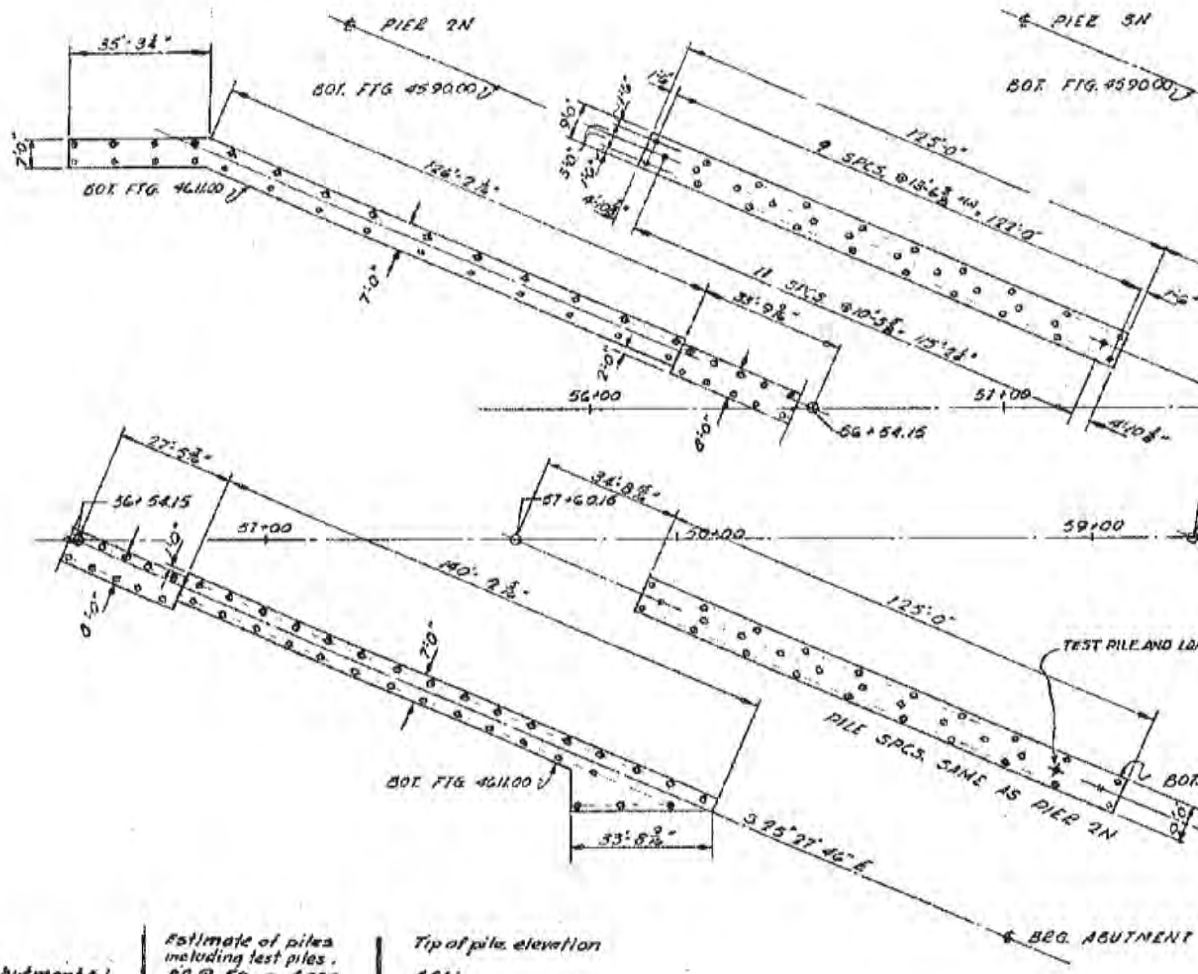


| | Estimate of piles including test piles. | Tip of pile elevation |
|---|---|---|
| Abutment # 1 | 80 @ 50 = 4000 | 4561 |
| Pier 2N - 25 | 64 @ 30 = 1920 | 4560 |
| Pier 3N - 35 | 72 @ 85 = 6120 | 4565 |
| Abutment # 4 | 70 @ 115 = 8050 | 4503 |
| | 20090 | |

NOTE:
1. TWO TEST PILES SHALL HAVE LOAD TESTS. SEE SPECIAL PROVISIONS.
2. AVERAGE ESTIMATED PILE LENGTHS:
   (A) WEST OF UPRR
      (a) STUB ABUTMENTS = 50'
      (b) PIERS = 30'
   (B) EAST OF UPRR
      (a) STUB ABUTMENTS = 115'
      (b) PIERS = 85'
3. MAX PILE STRESS
   (a) PIERS 2N & 3 = 51.5 TONS GROUP II ; PIERS 3N
   (b) ABUTMENT 1 & 4 = 48.4 TONS III
4. ⊙ DIRECTION OF 3:1 BATTER
   ✦ TEST PILE AND LOAD TEST
5. PILE DESIGN LOAD - 50 TONS.

**FOR INFORMATION ONLY**

[redacted]

| NO. ROAD DIST. NO. | STATE | FED. AID PROJ. NO. | | | |
|---|---|---|---|---|---|
| U.T. | UTAH | | | | |

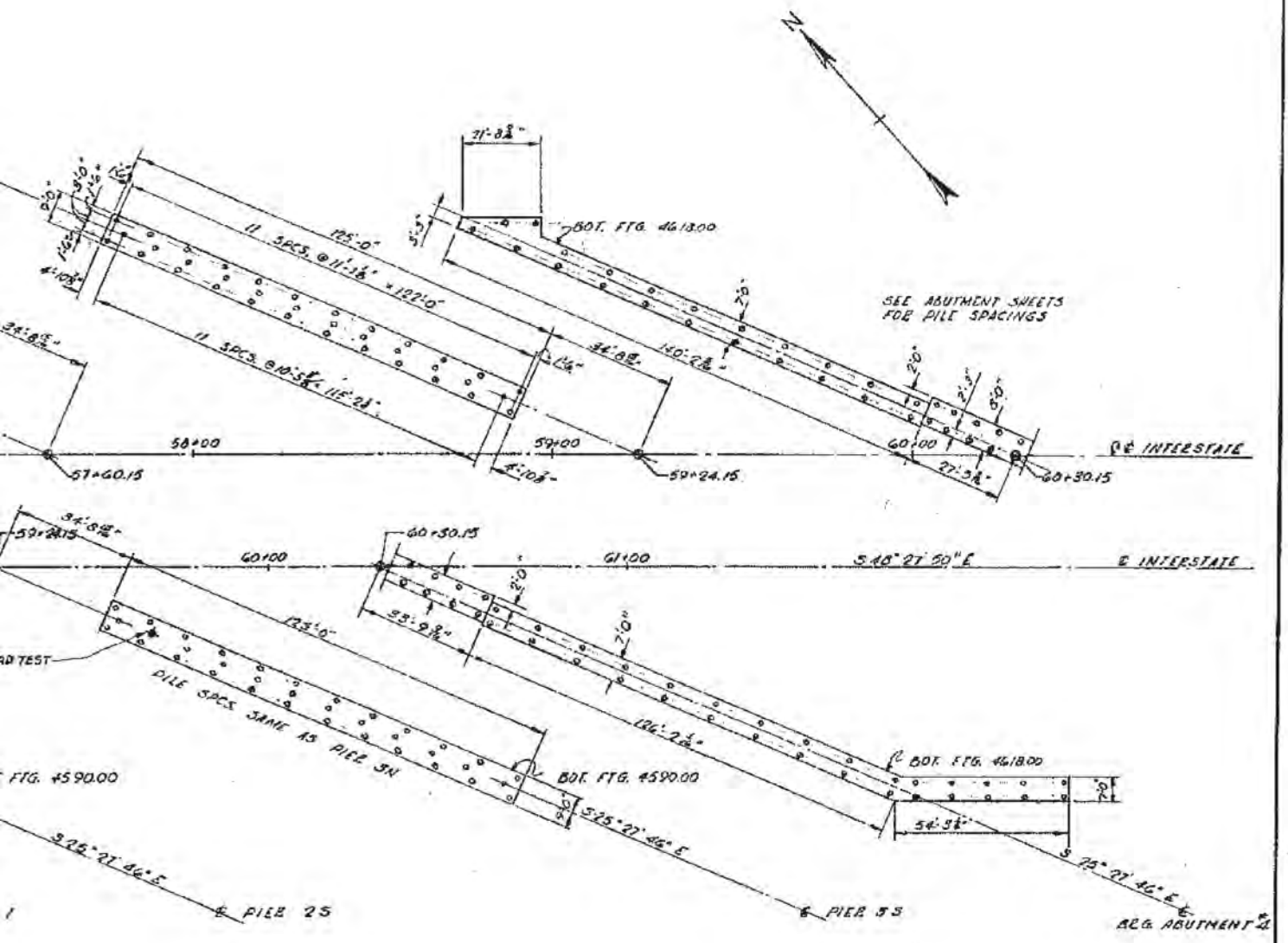


## FOUNDATION PLAN

SHEET 6 OF 24 SHEETS

UTAH STATE ROAD COMMISSION
SALT LAKE CITY, UTAH
BRIDGE DEPARTMENT

INTERSTATE OVER UNION PACIFIC R.R.
390'-0⅞" O. TO O. 67° X ING ℄
STA. 57+94.70 IG -15-6(3) 277
LEHI - PROVO UTAH COUNTY

DESIGNED BY ASP SCALE 1"=20'
DRAWN BY AC ISSUED June 11, 1965
TRACED BY AC APPROVED
CHECKED BY CHIEF BRIDGE ENGINEER

DESIGN AND DRAWING BY
WESTERN ENGINEERS, INC. AND
EDWARDS AND KELCEY
CONSULTING ENGINEERS

SUBMITTED BY CHIEF ENGINEER
UTAH ENGR. REG. NO. 2388

REGISTERED PROFESSIONAL ENGINEER NO. 2388 H. JACK DONALDO STATE OF UTAH

DWG. NO. C-341

STRUCTURE 1-C

ø5 • SISTONS II (AFTER REDUCTION)

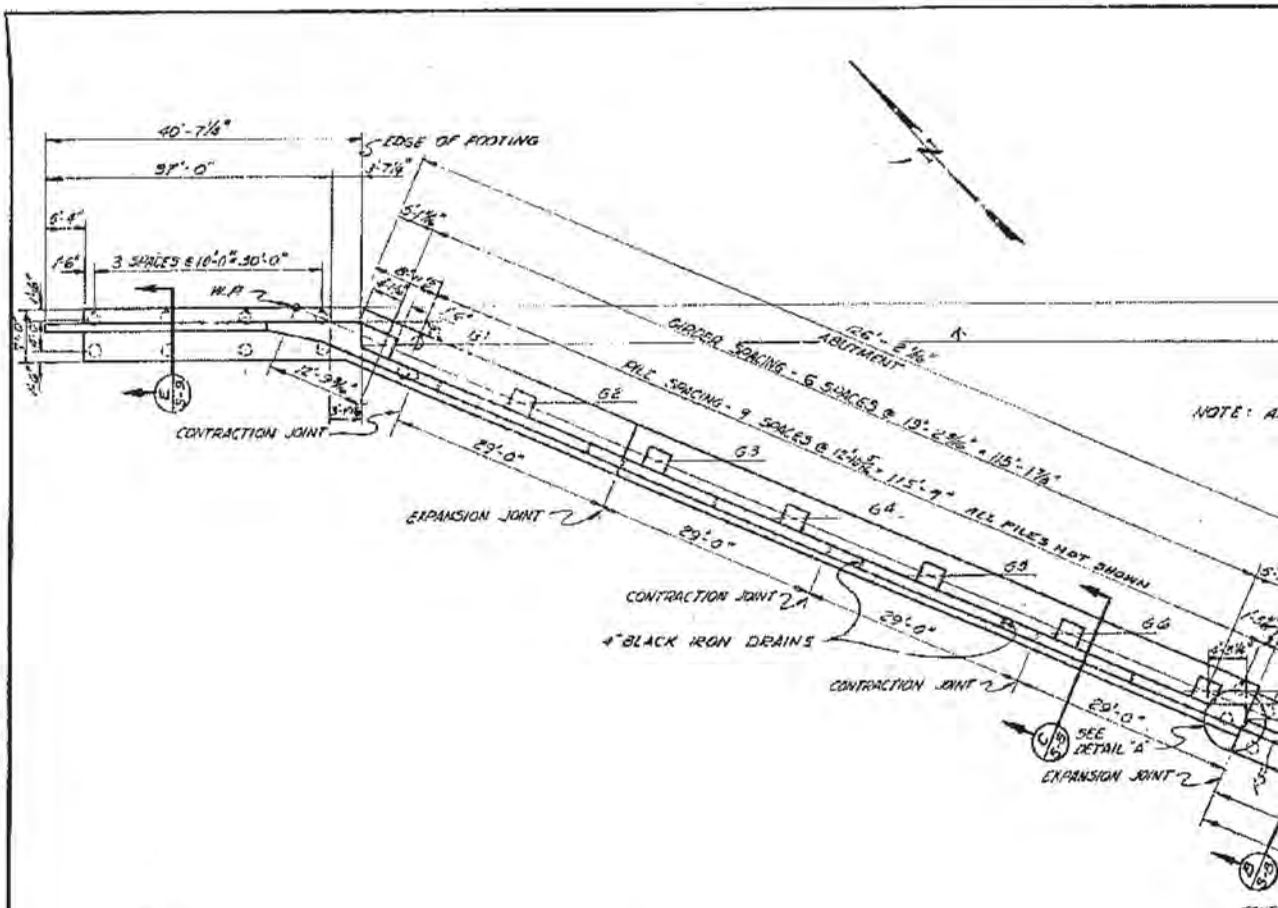


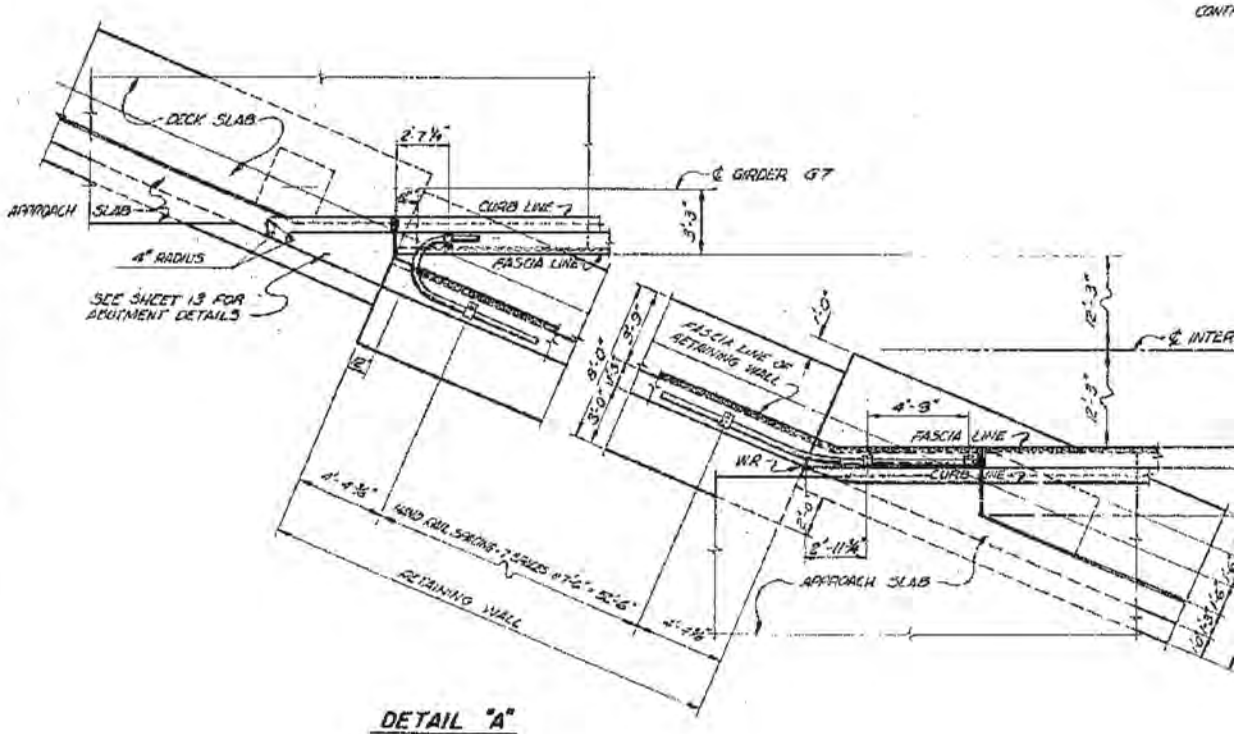


**DETAIL "A"**
SCALE: 1/4" = 1'-0"

[redacted]

| FED. ROAD DIST. NO. | STATE | FED. AID PROJ. NO. | PROJECT NO. | SHEET NO. | TOTAL SHEETS |
|---|---|---|---|---|---|
| U.T. | UTAH | | | | |

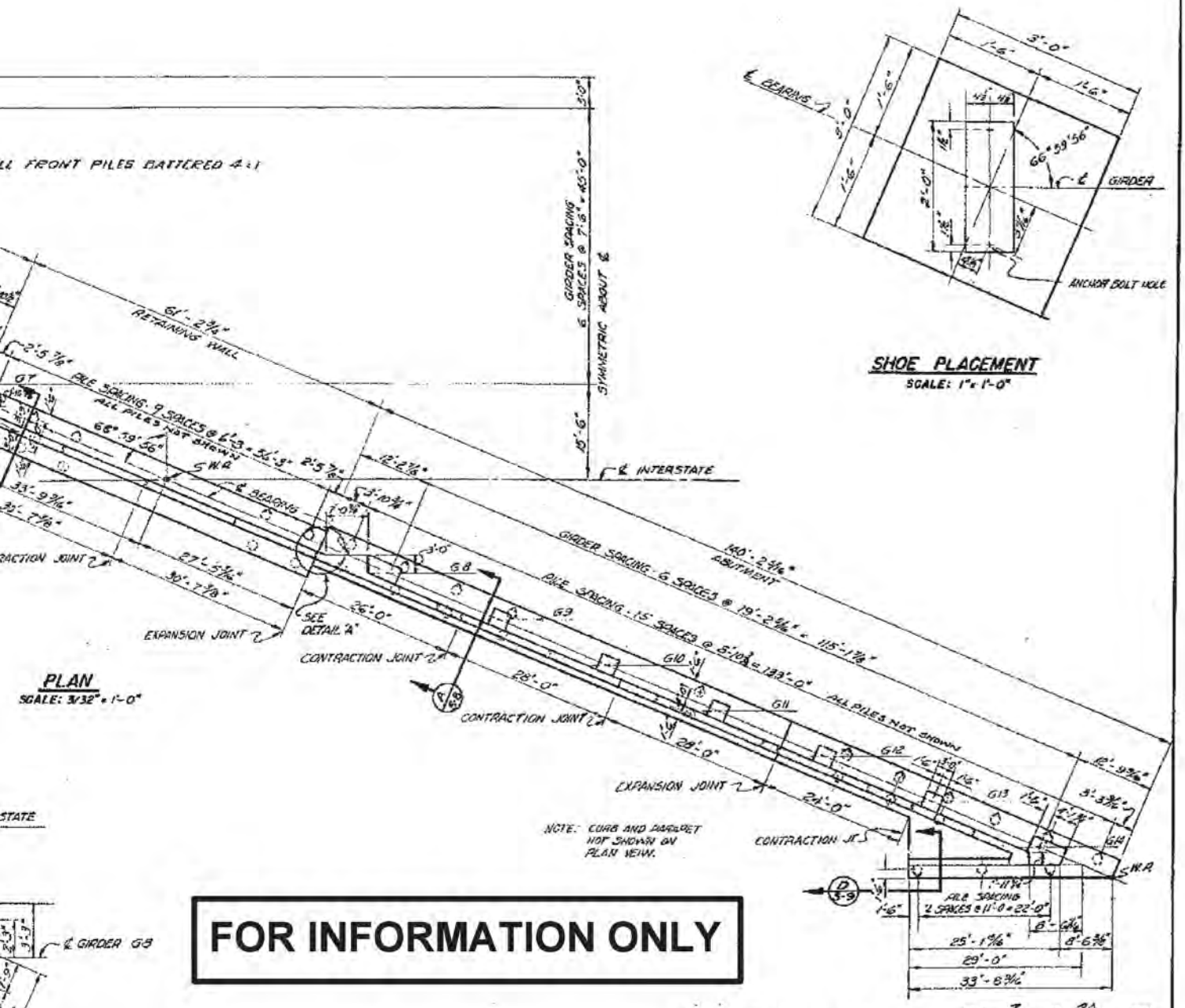


**FOR INFORMATION ONLY**

| NO. | BY | DATE | REVISIONS |
|---|---|---|---|
| 1 | ABM | 3/14/63 | Pile Batter 1:4 |

REGISTERED PROFESSIONAL ENGINEER NO. 2388 H. JACK LEONARD STATE OF UTAH

DESIGN AND DRAWING BY
WESTERN ENGINEERS, INC. AND
EDWARDS AND KELCEY
CONSULTING ENGINEERS

SUBMITTED BY H. Jack Leonard, Chief Engineer
UTAH PROF. REG. NO. 2388

SHEET 7 OF 24 SHEETS

UTAH STATE ROAD COMMISSION
SALT LAKE CITY, UTAH
BRIDGE DEPARTMENT

INTERSTATE OVER
UNION PACIFIC R.R.
390'-0 3/8" O. TO O. 67° X ING ℄
STA. 87+94.70 IG-15-6(23) 7.77
LEHI-PROVO UTAH COUNTY

| | |
|---|---|
| DESIGNED BY ASR | SCALE AS SHOWN |
| DRAWN BY G.W. | ISSUED 11-19-63 |
| TRACED BY G.W. | APPROVED D.L. Sargent, CHIEF BRIDGE ENGINEER |
| CHECKED BY B.K. | |

NO. | STD. NO. C-341

STRUCTURE I-G

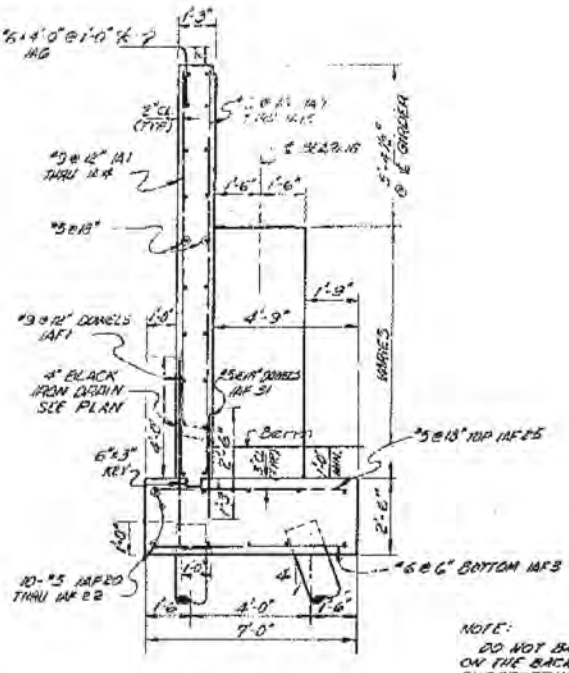


SECTION A

NOTE:
DO NOT BACKFILL OVER HALFWAY ON THE BACKWALL BEFORE THE SUPERSTRUCTURE IS IN PLACE.

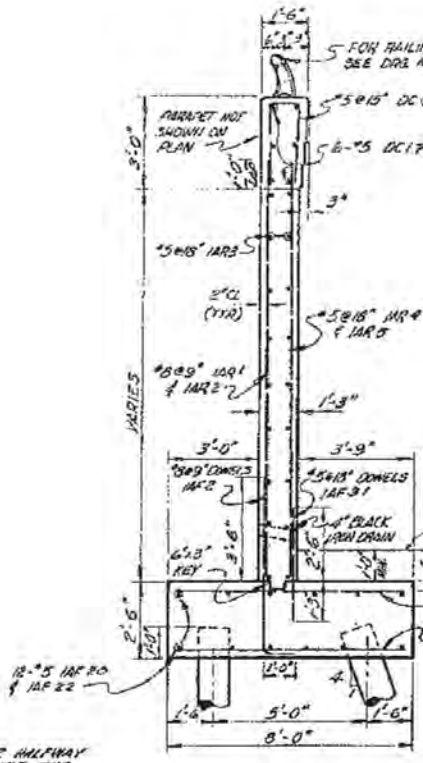


SECTION B

SCALE: 3/8" = 1'-0"

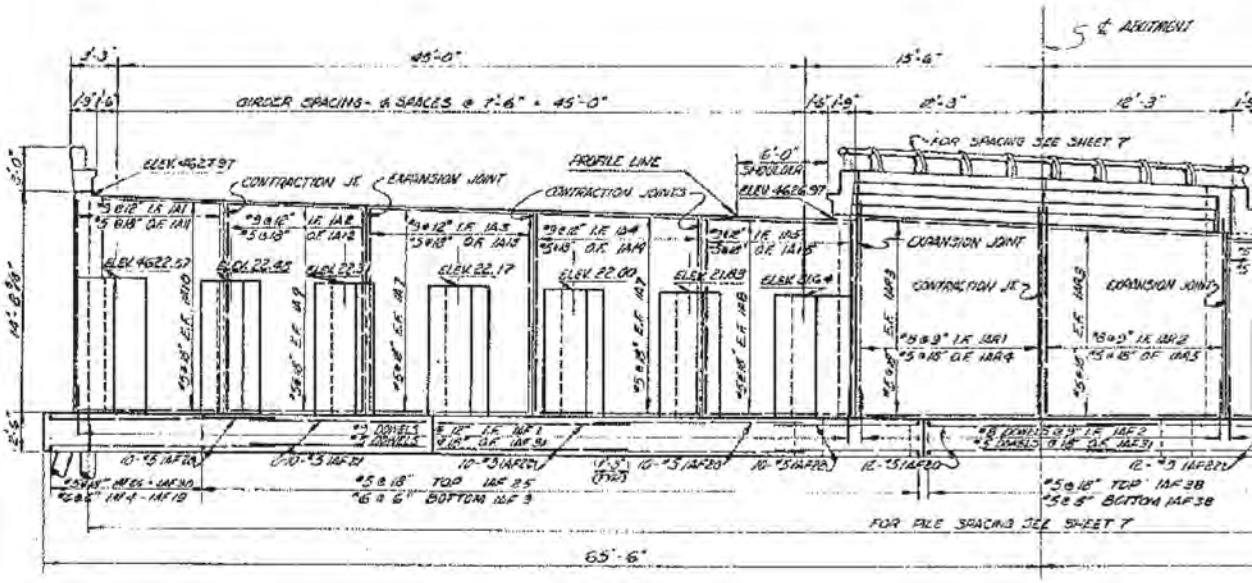


ELEVATION
SCALE: 3/16" = 1'-0"

# FOR INFORMATION ONLY

| FED. ROAD DIST. NO. | STATE | FED. AID PROJ. NO. |
|---|---|---|
| U.T. | UTAH | |

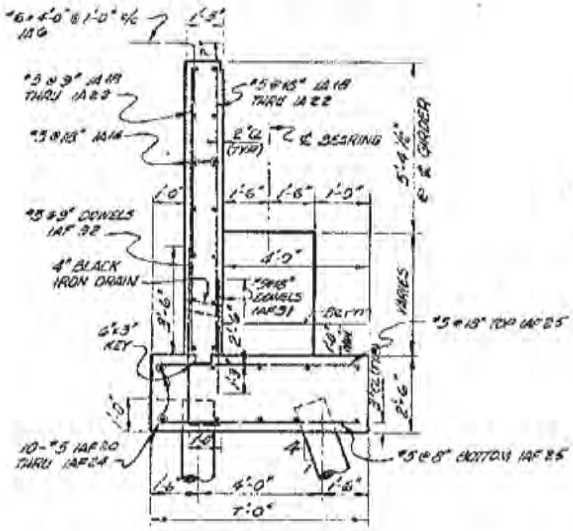


SECTION C

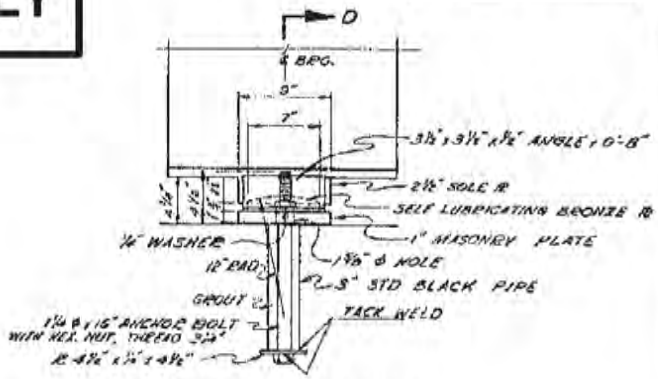


ABUTMENT EXP. SHOE

SCALE: 1½" = 1'-0"

For fixed bearing see sheet 19

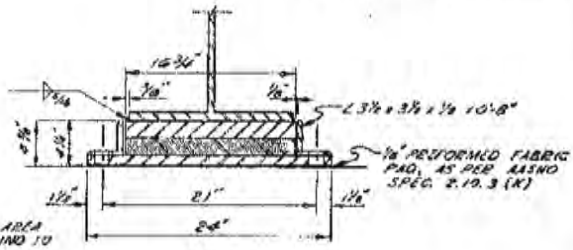


SECTION D

NOTE:
BRIDGE SEAT BEARING AREA TO BE DUBBED OF GROUND TO GRADE WITHIN ¼".
(NO GROUT)

| LOCATION | % SLOPE ON SOLE PL |
|---|---|
| ABUTMENT #1 | |
| G-1 THRU G-7 | 2.5 % |
| G-8 THRU G-10 | 2.0 % |
| G-11 THRU G-14 | 1.5 % |
| PIER #2N & #2S | |
| G-1 | 2.5 % |
| G-2 THRU G-7 | 2.0 % |
| G-8 THRU G-11 | 1.5 % |
| G-12 THRU G-14 | 1.0 % |
| PIER #3N & #3S | |
| G-29 THRU G-33 | 1.5 % |
| G-34 THRU G-37 | 1.0 % |
| G-38 THRU G-42 | 0.0 % |
| ABUTMENT #4 | |
| G-29 THRU G-35 | 1.0 % |
| G-36 THRU G-42 | 0.0 % |

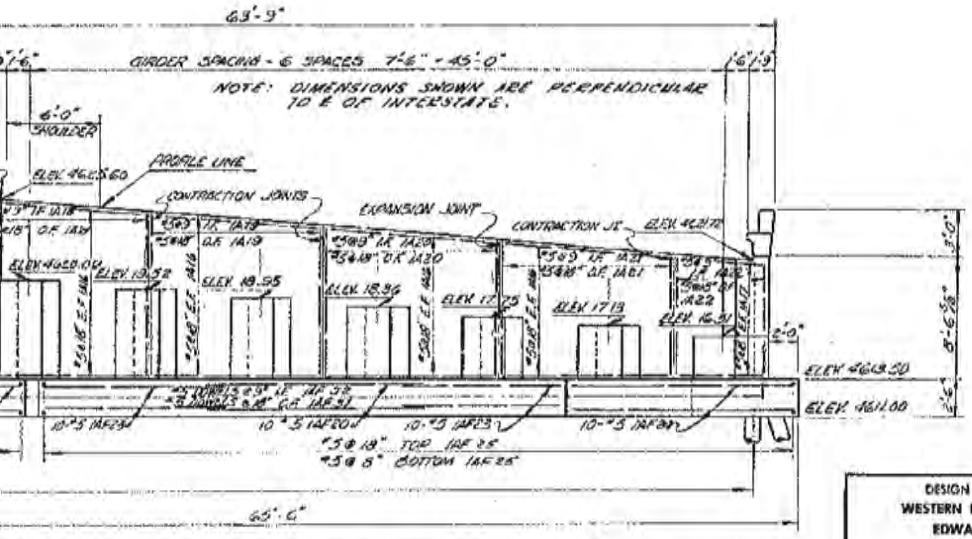


ABUTMENT NO. 1 ELEVATION

AEM Wing's File Copy 1:4

| BY | DATE | REMARKS |
|---|---|---|

REGISTERED PROFESSIONAL ENGINEER NO. 2388 H. JACK LEONARD STATE OF UTAH

DESIGN AND DRAWING BY
WESTERN ENGINEERS, INC. AND
EDWARDS AND KELCEY
CONSULTING ENGINEERS

SUBMITTED BY H. Jack Leonard CHIEF ENGINEER
UTAH ENGR. REG. NO. 2388

SHEET 8 OF 24 SHEETS

UTAH STATE ROAD COMMISSION
SALT LAKE CITY, UTAH
BRIDGE DEPARTMENT

INTERSTATE OVER
UNION PACIFIC R.R.
390'-0⅞" O. TO O. 67° X ING ∠
STA. 57+94.70 ID-15-8(20) 277
LEHI-PROVO UTAH COUNTY

DESIGNED BY ASR SCALE AS SHOWN
DRAWN BY DW ISSUED June 6, 1965
TRACED BY DW APPROVED H. Jack Leonard CHIEF BRIDGE ENGINEER
CHECKED BY BK
SR. NO. BRG. NO. C-341

STRUCTURE 1-C

3rd Const.

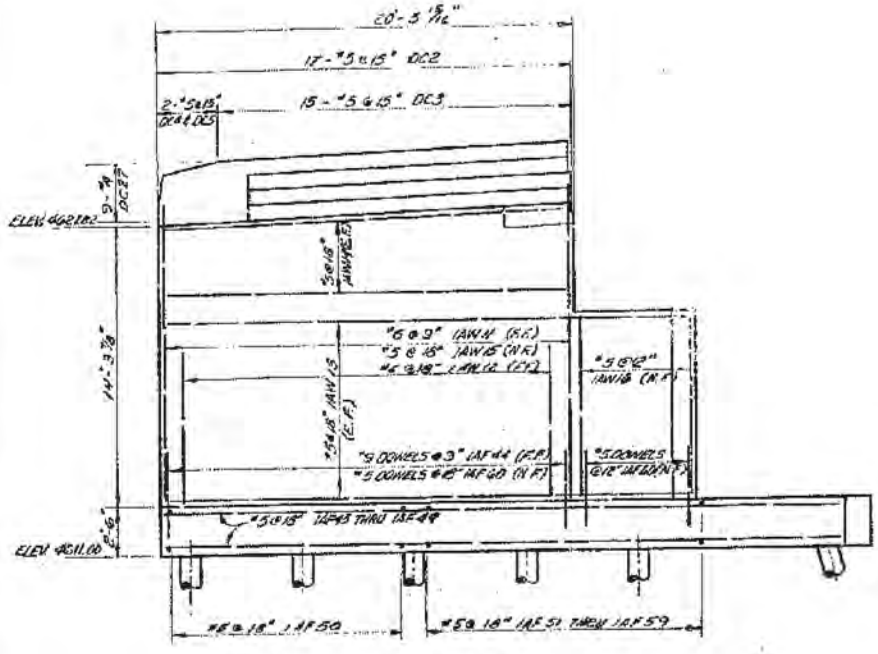


**SOUTH WING-WALL ELEVATION**

SCALE: 1/4" = 1'-0"

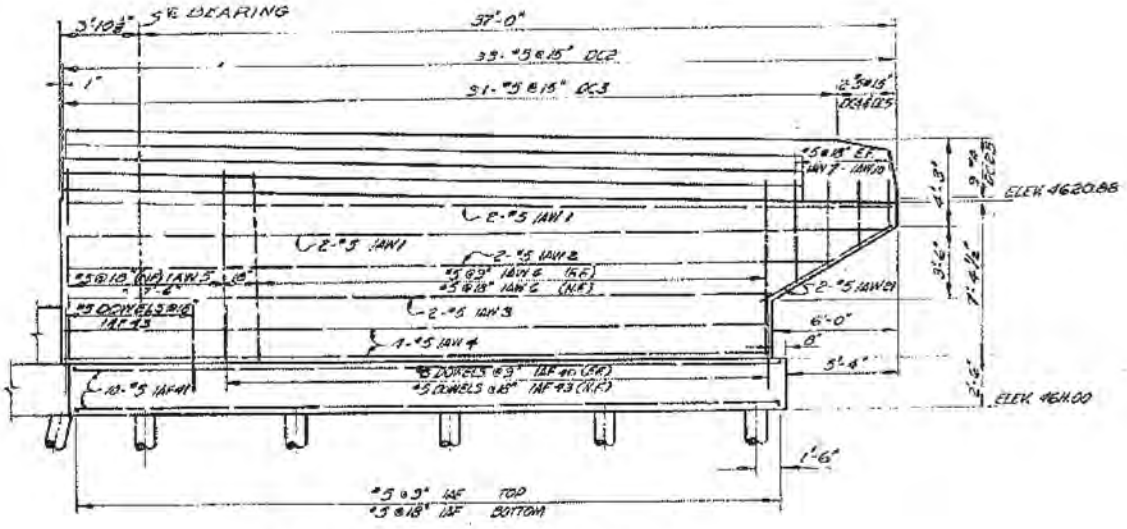


**NORTH WING-WALL ELEVATION**

SCALE: 1/4" = 1'-0"

**FOR INFORMATION ONLY**

DGN Files IPL PWBdms\16721\4433.C-041-B9.Form\Boom
02-MAY-2005

| FED. ROAD DIST. NO. | STATE | FED. AID PROJ. NO. | | | |
|---|---|---|---|---|---|
| N.T. | UTAH | | | | |

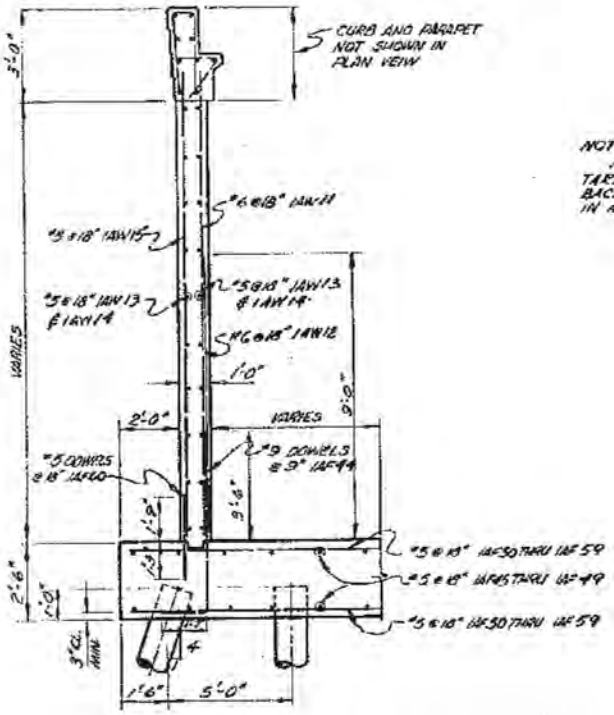


## SECTION D

SCALE: 3/8"=1'-0"

NOTE:
PLACE 5 LAYERS OF TARPAPER, 1'-3"x2'-0", OVER BACKWALL AT EXP. JOINTS IN APPROACH SLAB.

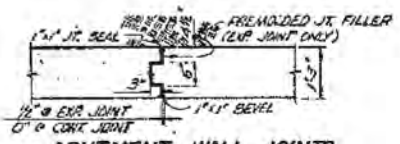


## ABUTMENT WALL JOINTS

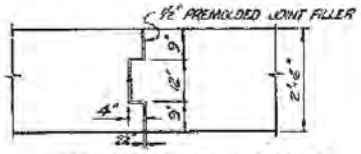


## FOOTING EXPANSION JOINT

## EXPANSION & CONTRACTION JOINTS

SCALE: 1/2"=1'-0"

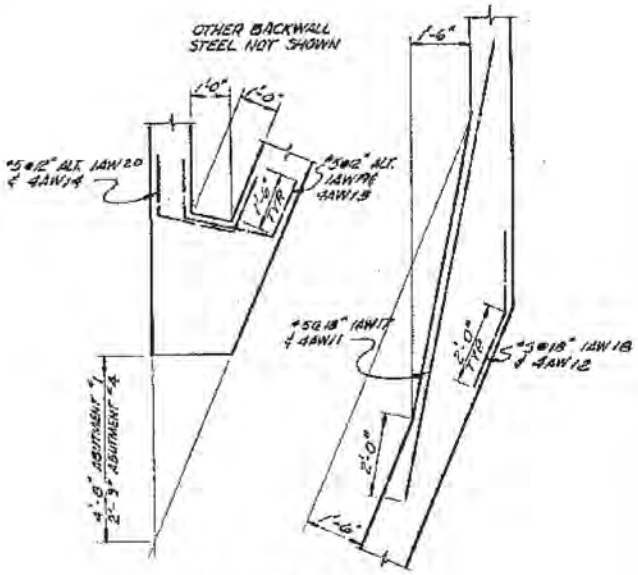


## FILLET DETAILS

SCALE: 1/2"=1'-0"

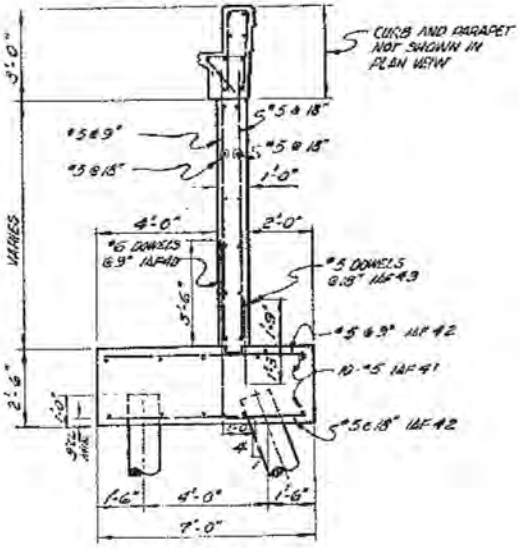


## SECTION E

SCALE: 3/8"=1'-0"

## ABUTMENT NO.1 DETAILS

| NO. | BY | DATE | REVISIONS |
|---|---|---|---|
| 1 | AEM | 10/1/68 | Pile Batter 1:4 |

REGISTERED PROFESSIONAL ENGINEER NO. 2388 N. JACK LEONARD STATE OF UTAH

DESIGN AND DRAWING BY
WESTERN ENGINEERS, INC. AND
EDWARDS AND KELCEY
CONSULTING ENGINEERS

SUBMITTED BY N. Jack Leonard CHIEF ENGINEER
UTAH PROF. ENG. NO. 2-381

SHEET 9 OF 24 SHEETS

UTAH STATE ROAD COMMISSION
SALT LAKE CITY, UTAH
BRIDGE DEPARTMENT

INTERSTATE OVER UNION PACIFIC R.R.
390'-0" 0. TO 0. 67° XING ∠
STA. 57+96.10 IG-15-6(20) 277
LEHI - PROVO UTAH COUNTY

DESIGNED BY ASM SCALE AS SHOWN
DRAWN BY GW ISSUED
TRACED BY G.W. APPROVED
CHECKED BY CHIEF BRIDGE ENGINEER

NO. PROJ. NO. C-341

3rd Cont.

STRUCTURE 1-C

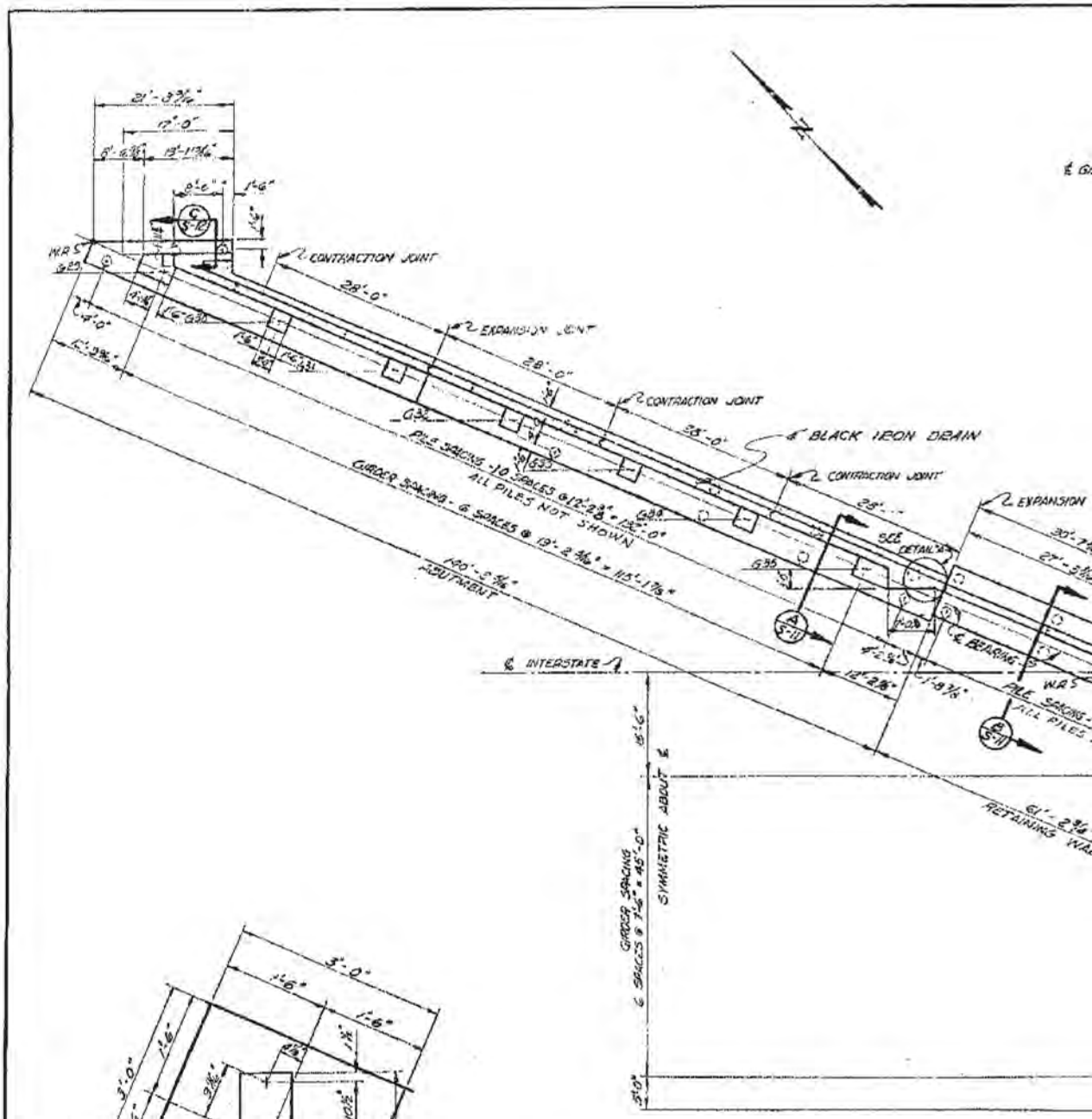


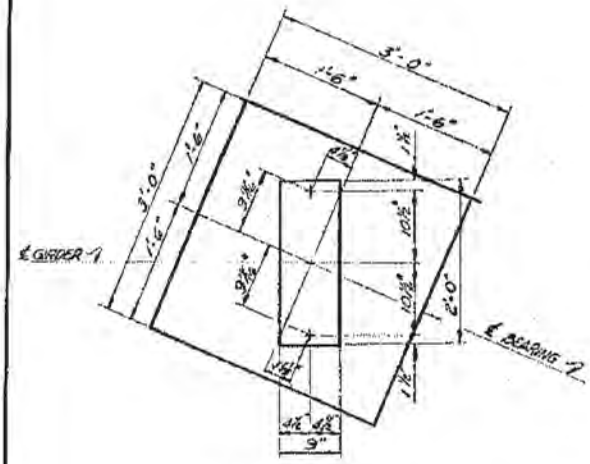


**SHOE PLACEMENT**
SCALE: 1" = 1'-0"

FOR INFORMAT

DGN Files 18 PWPrimal1672\4433 C-341-18 Form1.dgn

BS-HWY-2695

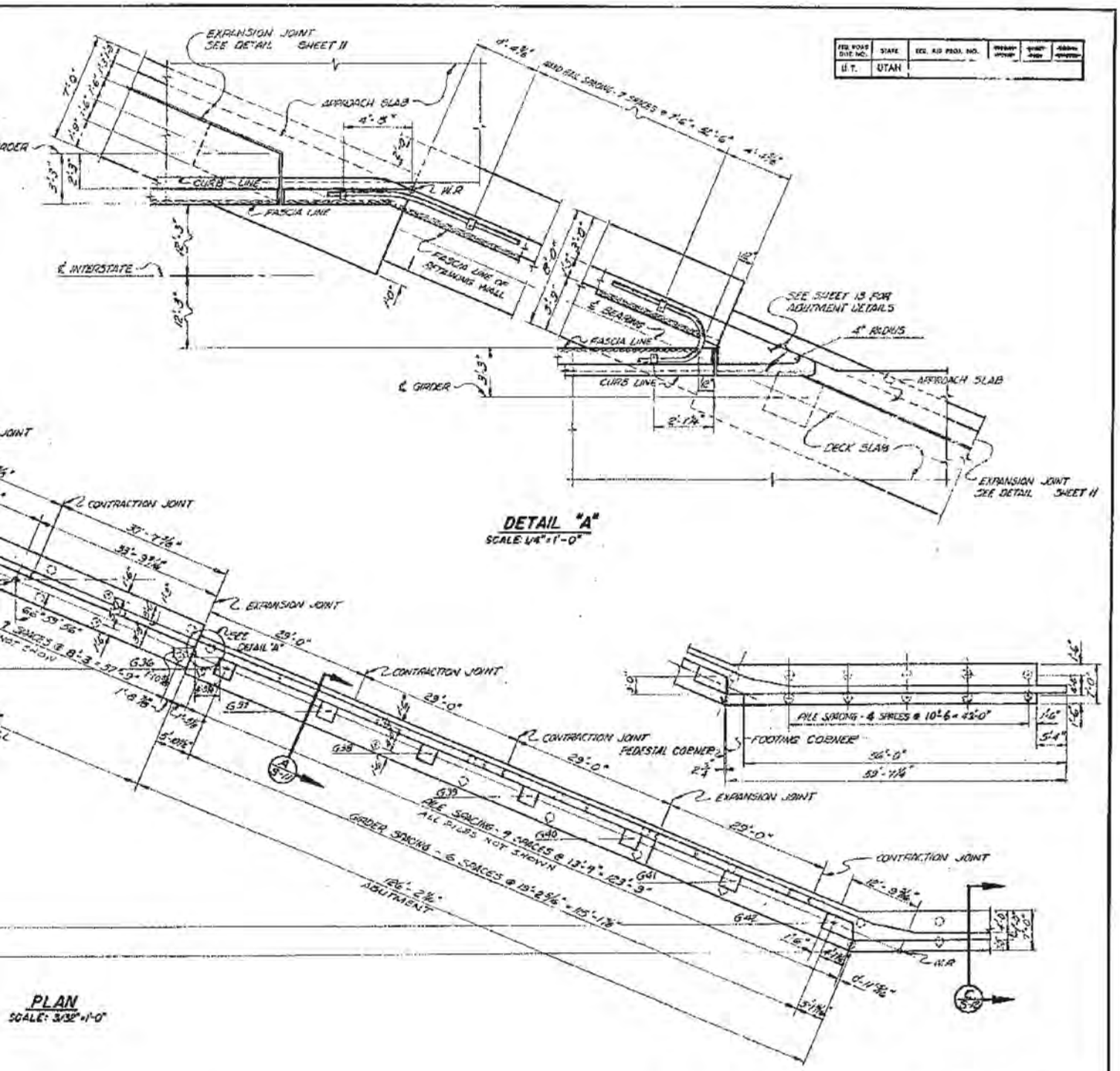


| FED. ROAD DIST. NO. | STATE | FED. AID PROJ. NO. |
|---|---|---|
| U.T. | UTAH | |

ABUTMENT NO. 4

SHEET 10 OF 24 SHEETS

UTAH STATE ROAD COMMISSION
SALT LAKE CITY, UTAH
BRIDGE DEPARTMENT

INTERSTATE OVER
UNION PACIFIC R.R.
390'-0 7/8" Q TO Q, 67° X ING ℄
STA. 57+94.70 IG-15-6(20) 277
LEHI-PROVO UTAH COUNTY

DESIGNED BY A.S.R. SCALE AS SHOWN
DRAWN BY G.W. ISSUED
TRACED BY G.W.S. APPROVED
CHECKED BY B.B. E.W. CHIEF BRIDGE ENGINEER

B.R. NO. DWG. NO. C-341

STRUCTURE 1-C

DESIGN AND DRAWING BY
WESTERN ENGINEERS, INC. AND
EDWARDS AND KELCEY
CONSULTING ENGINEERS

SUBMITTED BY H. J. Leonard CHIEF ENGINEER
UTAH ENGR. INC. NO. 2388

REGISTERED PROFESSIONAL ENGINEER NO. 2388 H. JACK LEONARD STATE OF UTAH

TION ONLY

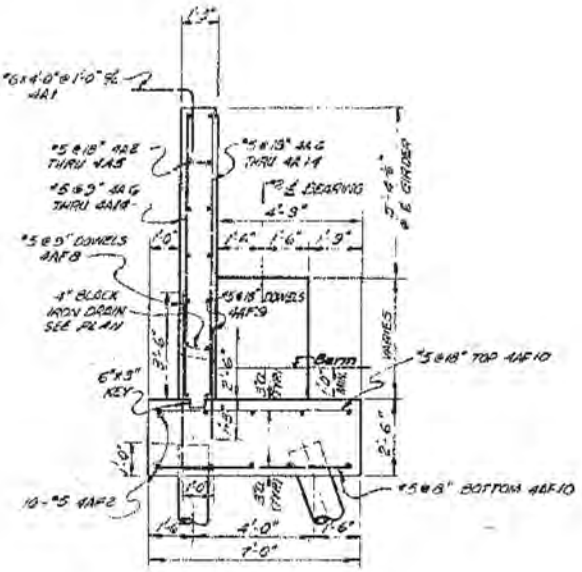


**SECTION A**

SCALE: 3/8" = 1'-0"

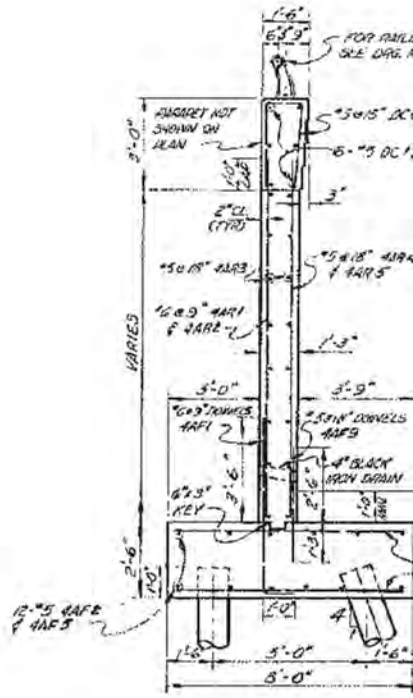


**SECTION B**

SCALE: 3/8" = 1'-0"

NOTE:
DO NOT BACKFILL OVER HALFWAY ON THE BACKWALL BEFORE THE SUPERSTRUCTURE IS IN PLACE.

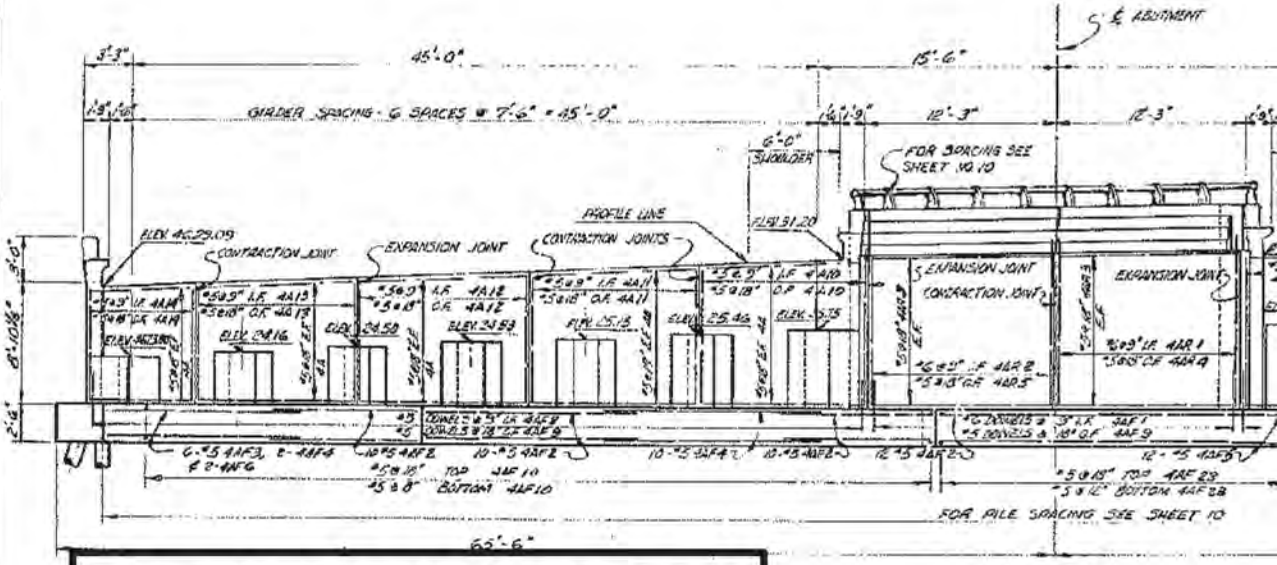


**ELEVATION**

SCALE: 3/16" = 1'-0"

**FOR INFORMATION ONLY**

[redacted]

| FED. ROAD DIST. NO. | STATE | FED. AID PROJ. NO. | | | |
|---|---|---|---|---|---|
| U.T. | UTAH | | | | |

NOTE.
DIMENSIONS FOR JOINT DETAIL ARE PERPENDICULAR TO ℄ BEARING.

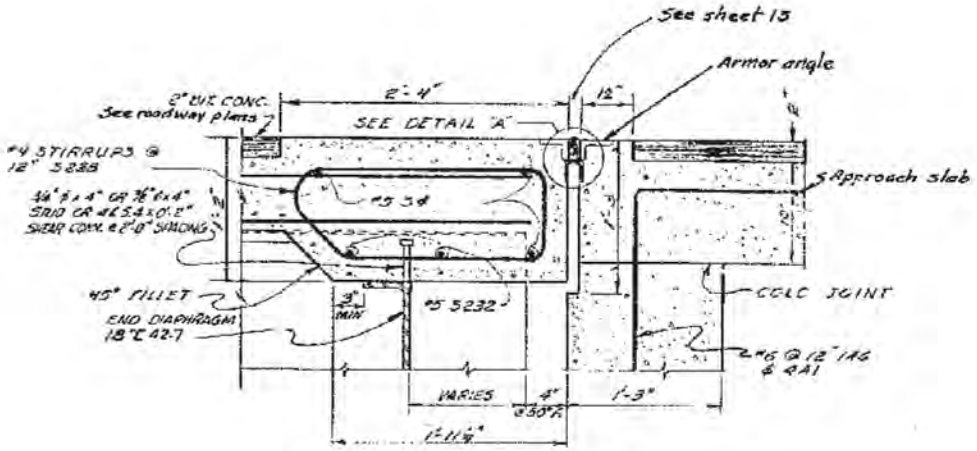


## EXPANSION ABUTMENT JOINT DETAIL

NO SCALE

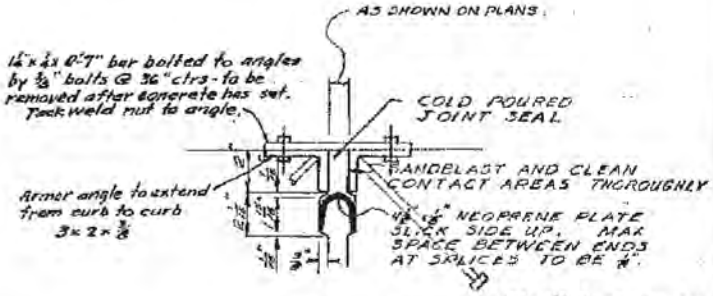


## DETAIL "A"

NO SCALE

1/2"φ x 5 1/2" Min. studs @ 24" ctrs. or alternate bent bar 1 1/4 x 1'-8" to be paid for on bases of stud weight.

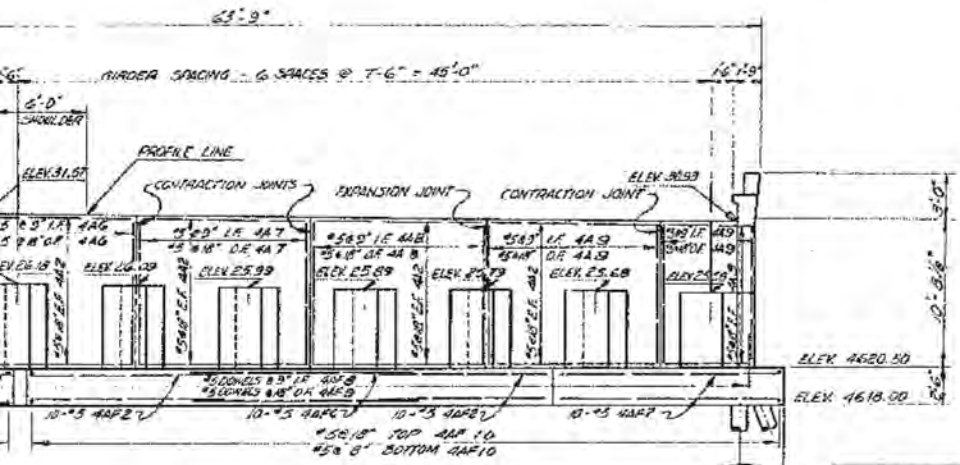


## ABUTMENT NO. 4 ELEVATION

NOTE: SEE SHEETS 13 & 15 FOR EE-STEEL IN PEDESTALS AND WINGWALLS.

REGISTERED PROFESSIONAL ENGINEER NO. 2366 STATE OF UTAH

DESIGN AND DRAWING BY
WESTERN ENGINEERS, INC. AND
EDWARDS AND KELCEY
CONSULTING ENGINEERS

SUBMITTED BY H. Jack Stroud, CHIEF ENGINEER
UTAH BRIDGE EC. NO. 2-368

SHEET 11 OF 24 SHEETS

UTAH STATE ROAD COMMISSION
SALT LAKE CITY, UTAH
BRIDGE DEPARTMENT

**INTERSTATE OVER UNION PACIFIC R.R.**
390'-0 7/8" O. TO O. 67° XING ℄
STA 57+94.70 IS-15-6(20) 277
LEHI-PROVO UTAH COUNTY

DESIGNED BY A.S.A. SCALE AS SHOWN
DRAWN BY G.W. ISSUED June 11, 1963
TRACED BY G.W. APPROVED D. Ivy Samuelson
CHIEF BRIDGE ENGINEER
CHECKED BY R.G.L.
NO. DRD. NO. C-341

STRUCTURE 1-C

1:4
REMARKS
REVISIONS

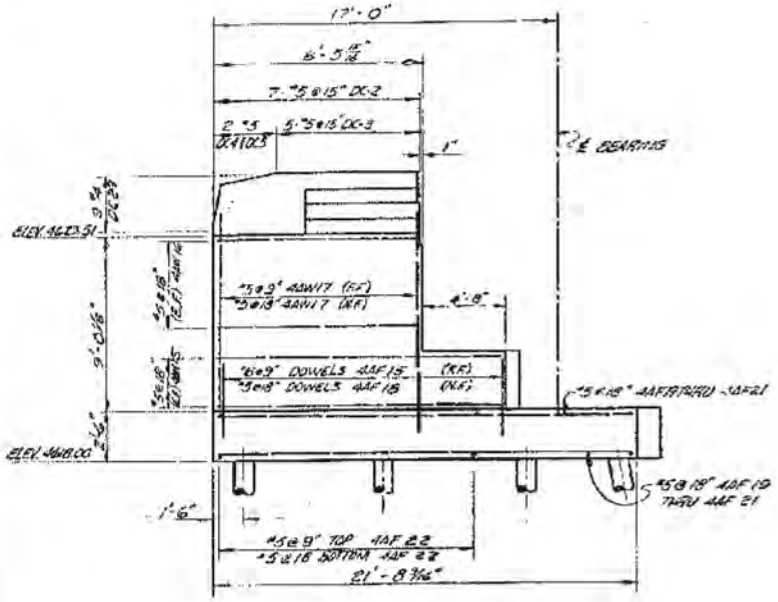


**NORTH WING-WALL**

SCALE: 1/4" = 1'-0"

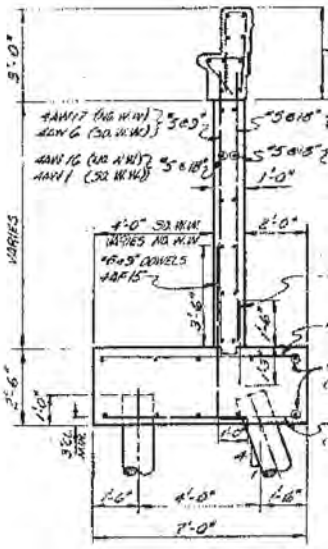


**SECTION C**

SCALE: 3/8" = 1'-0"

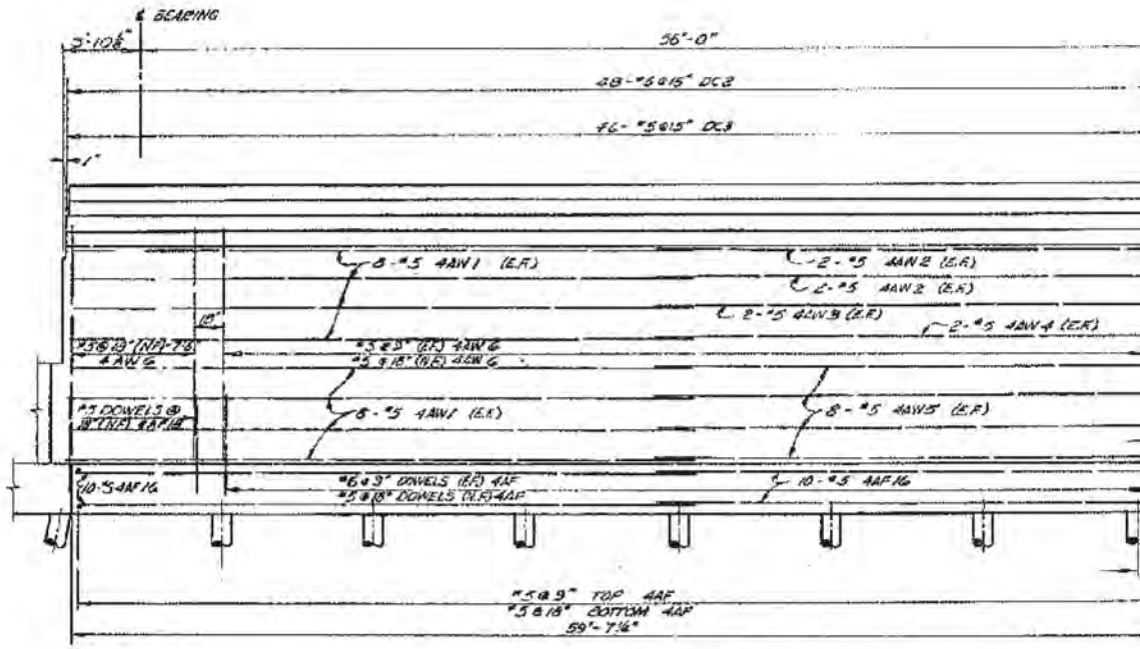


**SOUTH WING-WALL**

SCALE: 1/4" = 1'-0"

[redacted]

| FED. ROAD DIV. NO. | STATE | FED. AID PROJ. NO. | | | |
|---|---|---|---|---|---|
| U.T. | UTAH | | | | |

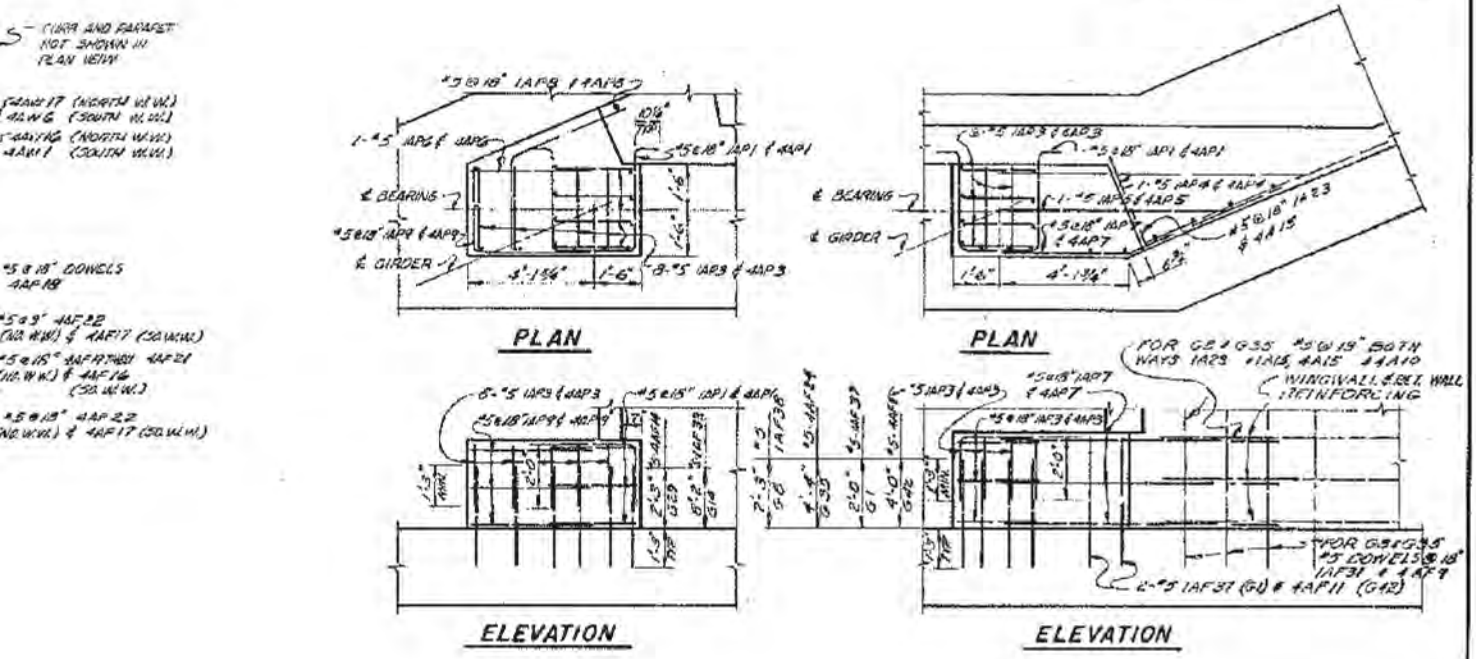


## EXTERIOR PEDESTALS

NO SCALE

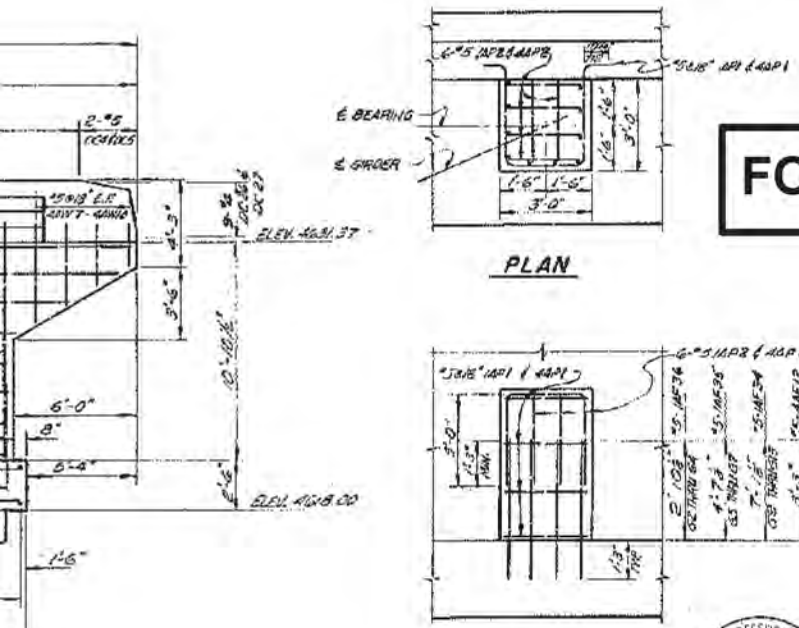


**FOR INFORMATION ONLY**

## INTERIOR PEDESTAL

SCALE: 3/4" = 1'-0"

## ABUTMENT NOS. 1&4 DETAILS

| NO. | BY | DATE | REVISIONS |
|---|---|---|---|
| 1 | AEM | 9/19/83 | Pile Batter 1:4 |

REYNSTONES

SHEET 12 OF 24 SHEETS

UTAH STATE ROAD COMMISSION
SALT LAKE CITY, UTAH
BRIDGE DEPARTMENT

**INTERSTATE OVER UNION PACIFIC R.R.**

390'-0⅞" O.TO O. 67° X ING ∠ 3-Span Cont.
STA 57+94.70 EG-15-8(20)277
LEHI - PROVO UTAH COUNTY

DESIGNED BY A.S.P. SCALE AS SHOWN
DRAWN BY C.M. ISSUED
TRACED BY G.M. APPROVED
CHECKED BY B.K. CHIEF BRIDGE ENGINEER

NO. C-341

DESIGN AND DRAWING BY
WESTERN ENGINEERS, INC. AND
EDWARDS AND KELCEY
CONSULTING ENGINEERS

SUBMITTED BY
UTAH PROF. ENG. NO. 2355

REGISTERED PROFESSIONAL ENGINEER NO. 2388 N. J. O'CONNOR STATE OF UTAH

STRUCTURE I-G

APPROACH SLAB
CONTRACTION JOINT
NO SCALE

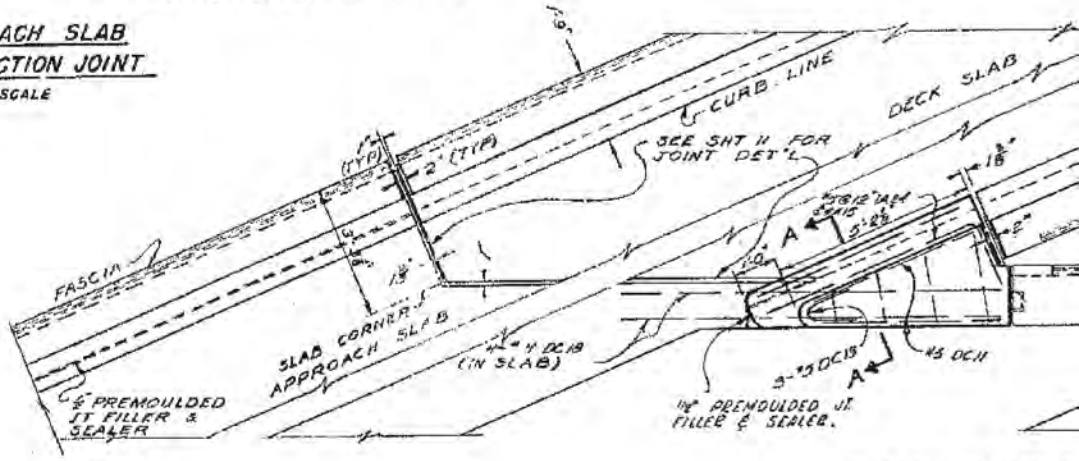


TYPICAL PLAN A

SCALE: 1/2" = 1'

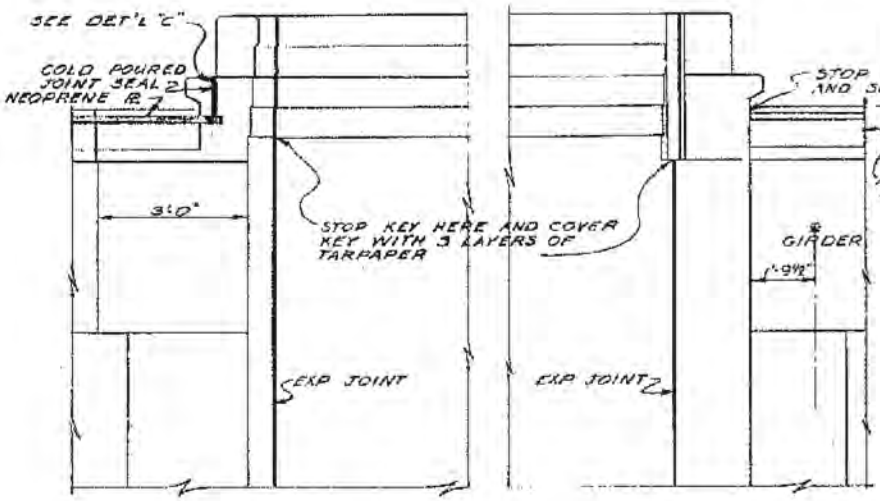


PARTIAL ELEVATION

SCALE: 1/2" = 1'-0"

SECT

SCALE

**FOR INFORMATION ONLY**

DGN Files IP. PWPubns\16721\4433.C-041-13.Foundation
02-MAY-2005

| FED. ROAD DIST. NO. | STATE | FED. AID PROJ. NO. | TOTAL SHEETS | SHEET NO. | TOTAL SHEETS |
|---|---|---|---|---|---|
| U. T. | UTAH | | | | |

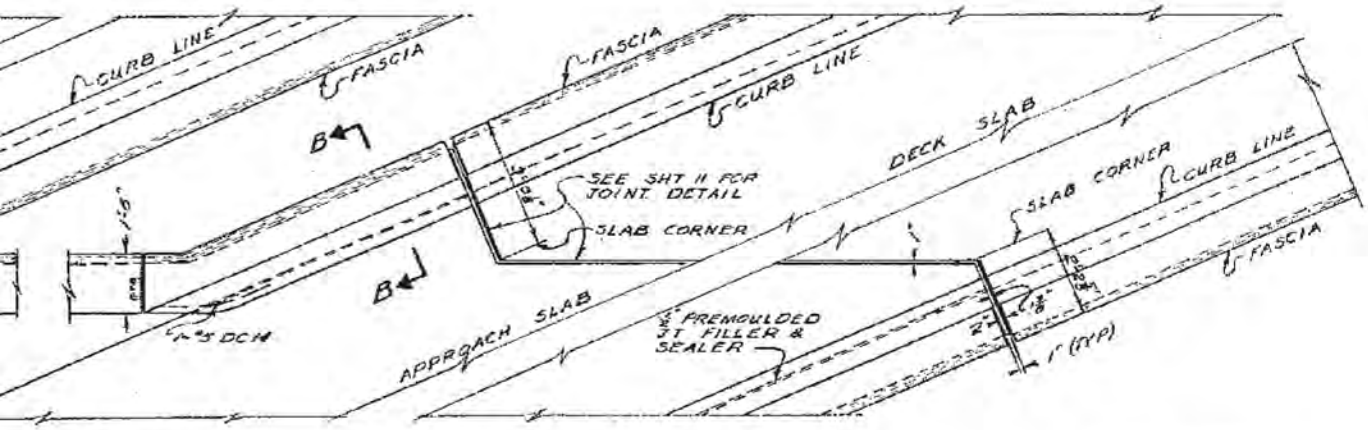


## T ABUTMENTS

0"

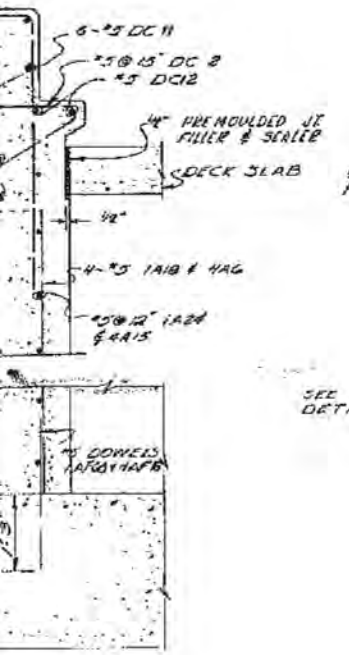


## ION A-A

3/4" = 1'-0"

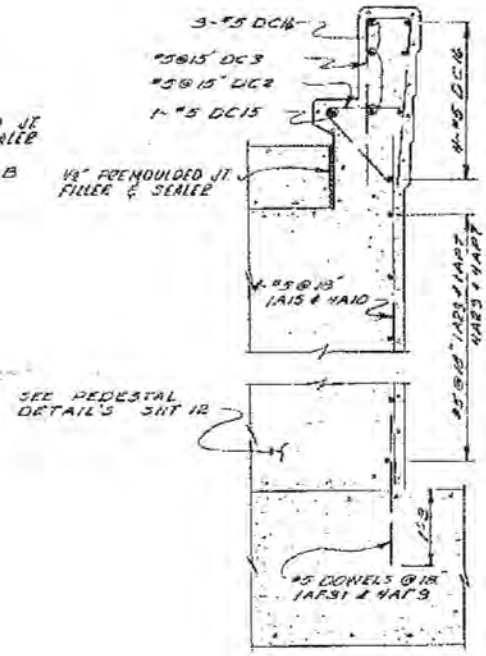


## SECTION B-B

SCALE: 3/4" = 1'-0"

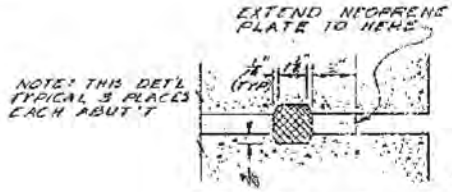


## DETAIL C

NO SCALE

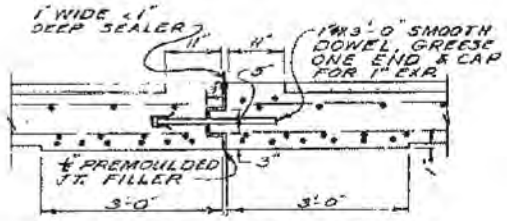


NOTE: RE-STEEL SAME AS SECT B-B SHT 3

## APPROACH SLAB EXP. JOINT

SCALE: 3/4" = 1'-0"

## ABUTMENT NOS. 1 & 4 DETAILS

SHEET 13 OF 24 SHEETS

UTAH STATE ROAD COMMISSION
SALT LAKE CITY, UTAH
BRIDGE DEPARTMENT

INTERSTATE OVER
UNION PACIFIC R. R.
390'-0 1/8" O TO O. 67" KING L.
STA. 57+94.70 [G-15-G(20)] 297
LEHI - PROVO UTAH COUNTY

DESIGNED BY ASB. SCALE AS NOTED
DRAWN BY P.L.L. ISSUED June 11, 1963
TRACED BY P.L.L. APPROVED D. de Sargent
CHIEF BRIDGE ENGINEER
CHECKED BY B.K.
NO. DFD. NO. C-341

DESIGN AND DRAWING BY
WESTERN ENGINEERS, INC. AND
EDWARDS AND KELCEY
CONSULTING ENGINEERS

SUBMITTED BY H. Jack Stewart
CHIEF ENGINEER
UTAH ENGR. REG. NO. 2368

REGISTERED PROFESSIONAL ENGINEER NO. 2368 H. JACK STEWART STATE OF UTAH

STRUCTURE 1-C

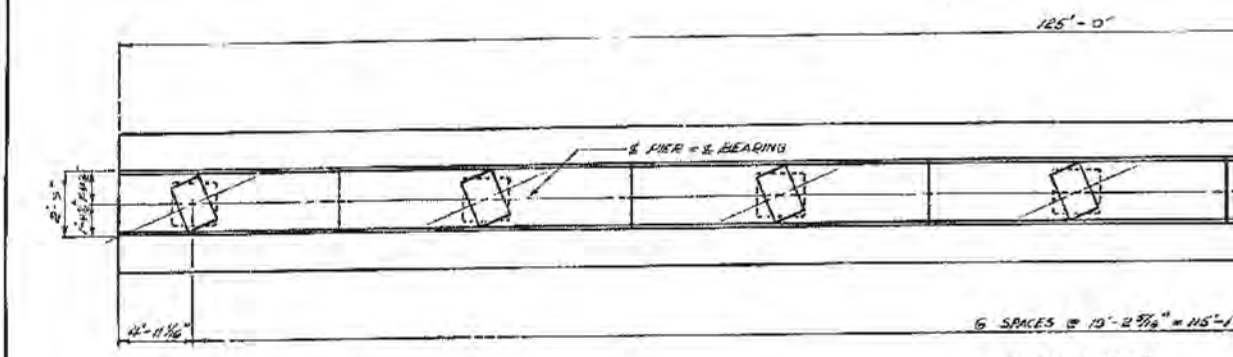


PLAN-PIERS

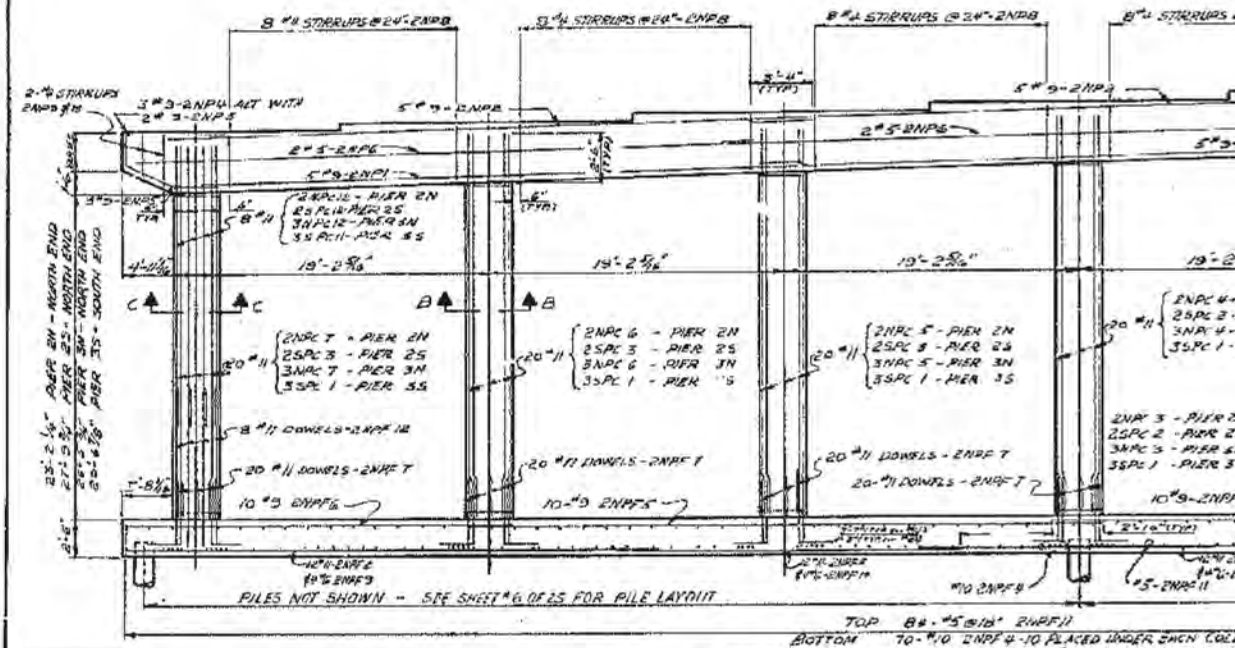


ELEVATION - PIERS

**FOR INFORMATION ONLY**

| | | | | | | | |
|---|---|---|---|---|---|---|---|
| 4618.99 | 19.54 | 20.08 | 20.61 | 21.12 | 21.62 | 22.11 | PIER 2N |
| 0 | 0 | 0 | 0 | 0 | 0 | 0 | SHIM REQ'D |
| 4622.18 | 22.61 | 23.03 | 23.44 | 23.83 | 24.21 | 24.58 | PIER 3N |
| 0 | 0 | 0 | 0 | 0 | 0 | 0 | SHIM REQ'D |

| | | | | | |
|---|---|---|---|---|---|
| PIER 2S | 4623.35 | 23.46 | 23.56 | 23.64 | 23.71 |
| SHIM REQ'D | 0 | 0 | 0 | 0 | 0 |
| PIER 3S | 4625.30 | 25.30 | 25.30 | 25.22 | 25.22 |
| SHIM REQ'D | 3/8" | 1/4" | 0 | 3/8" | 0 |

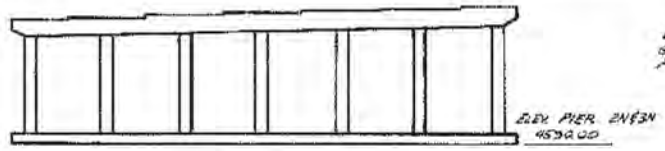


PIERS 2N & 3N

PIERS 2S & 3S

NOTE: SEE ELEVATION OF PIERS FOR SPLICING DETAILS OF EXTERIOR AND INTERIOR COLUMN STEEL.

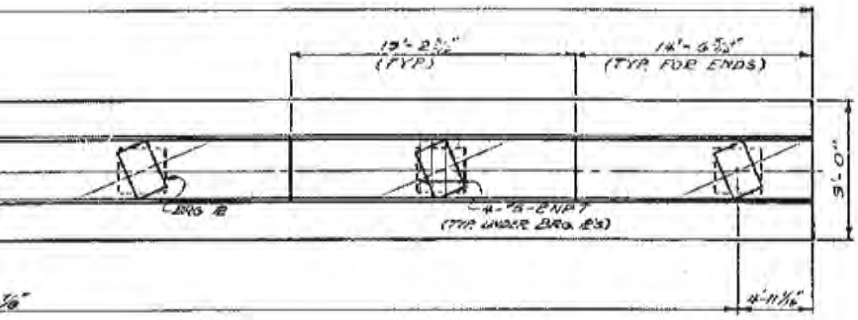


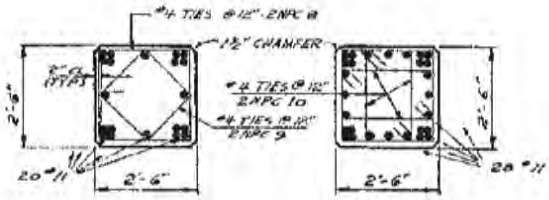


SECTION B-B

SECTION C-C

NOTE: THE PREFIX 2N OF MARK NO'S, SUCH AS 2NP1, INDICATES BAR P1 IS LOCATED IN PIER 2N. IN THE OTHER PIERS, THE SAME BAR IS MARKED WITH THE PREFIX PERTAINING TO THE NUMBER OF THAT PIER.

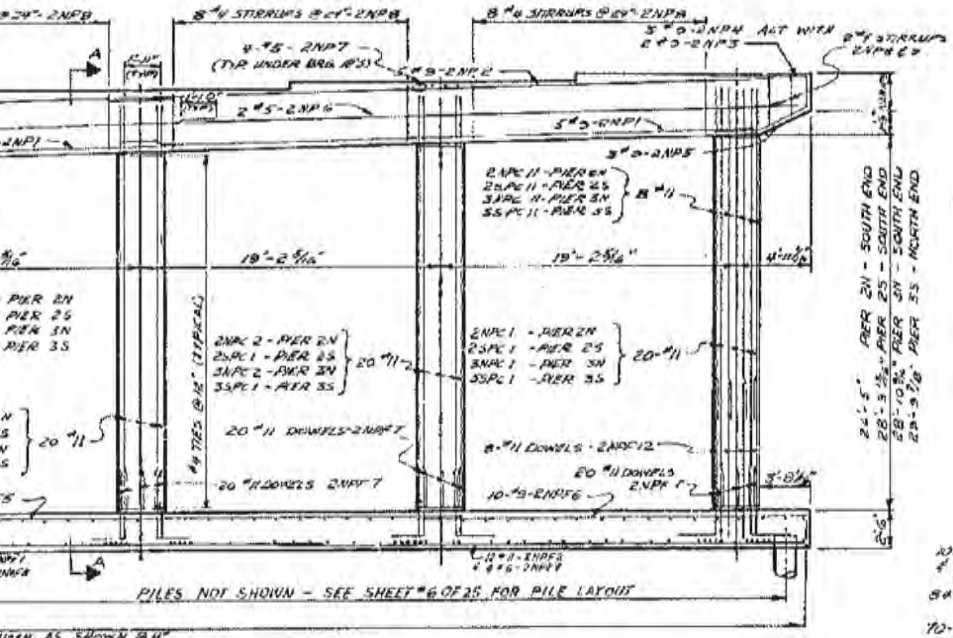


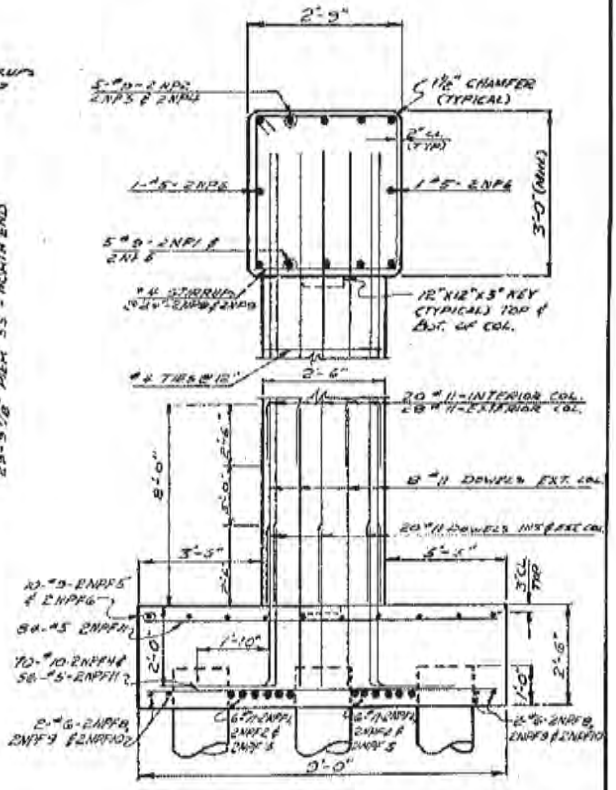


SECTION A-A

| | | |
|---|---|---|
| | 23.77 | 23.77 |
| | 0 | 5/16" |
| | 25.16 | 25.09 |
| | 0 | 0 |

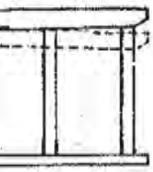

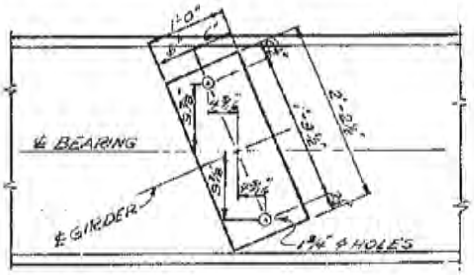


TYPICAL SHOE PLACEMENT

| NO. | BY | DATE | REMARKS |
|---|---|---|---|
| | | | REVISIONS |

UTAH STATE DEPARTMENT OF HIGHWAYS
SALT LAKE CITY, UTAH
STRUCTURES DIVISION

LEHI - PROVO
INTERSTATE OVER UNION PACIFIC R.R.
PIER DETAILS

| | | |
|---|---|---|
| DESIGNED BY | CHECKED BY | (G-15-6)(20)777 3rd Contr. |
| DRAWN BY H.D.S. | CHECKED BY T.R.P. | PROJECT NUMBER |
| QUANTITIES BY H.D.S. | CHECKED BY | SCT 3920 |
| APPROVED RECOMMENDED BY | GROUP LEADER | STATION |
| APPROVED June 11, 1963 DATE | CHIEF STRUCTURAL ENGINEER | UTAH COUNTY |
| BR. NO. | DRG. NO. C-341 | 14 OF 24 |

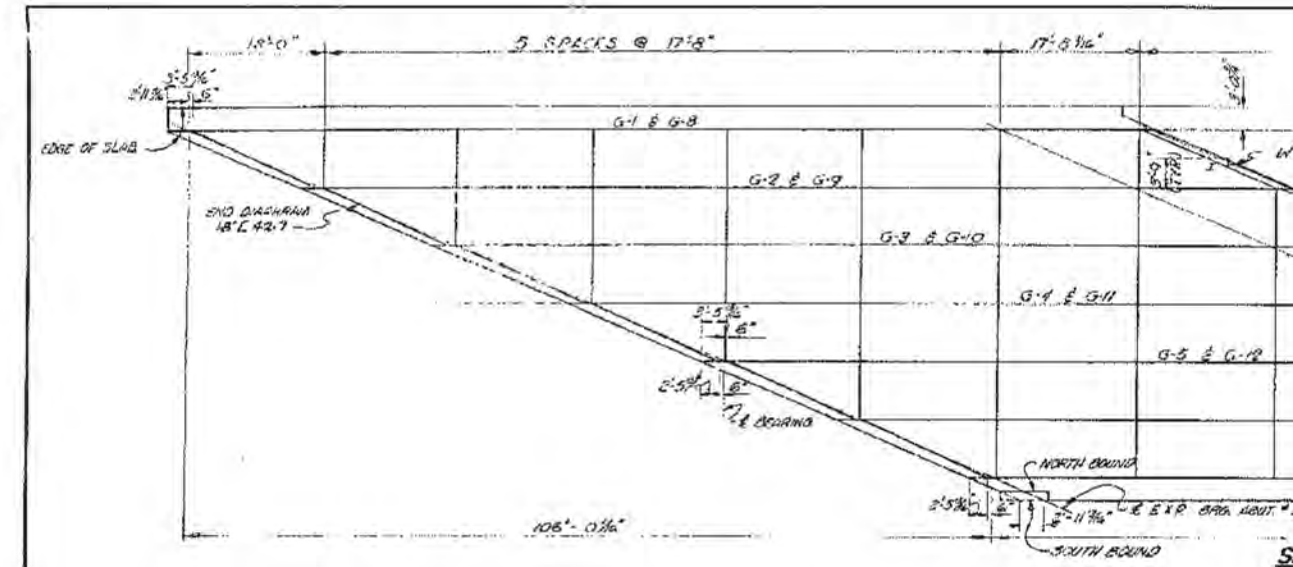
18'-0"
5 SPACES @ 17'-8"
17'-8 1/16"
EDGE OF SLAB
G-1 & G-8
G-2 & G-9
G-3 & G-10
G-4 & G-11
G-5 & G-12
END DIAPHRAM
18" [ 42.7
℄ BEARING
NORTH BOUND
SOUTH BOUND
106'-0 1/16"

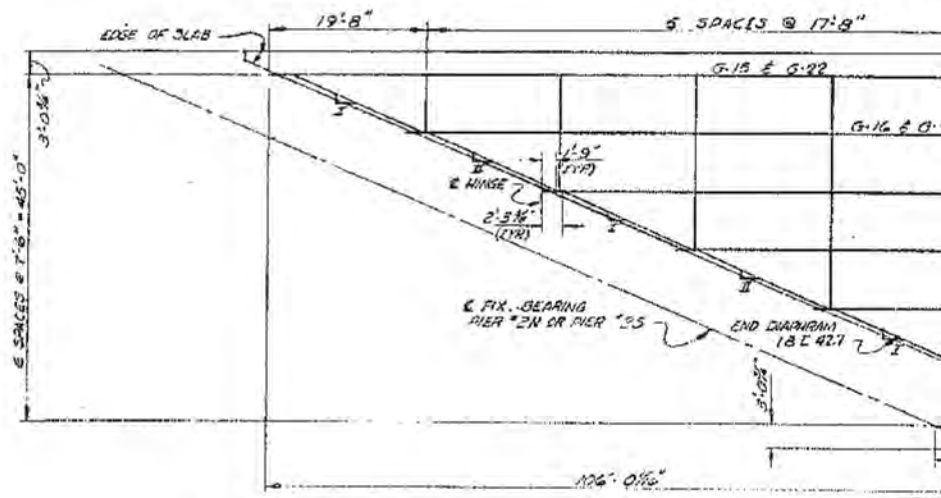
EDGE OF SLAB
19'-8"
5 SPACES @ 17'-8"
G-15 & G-22
℄ HINGE
℄ FIX.-BEARING
PIER "2N OR PIER "2S
END DIAPHRAM
18" [ 42.7
6 SPACES @ 7'-6" = 45'-0"
106'-0 1/16"

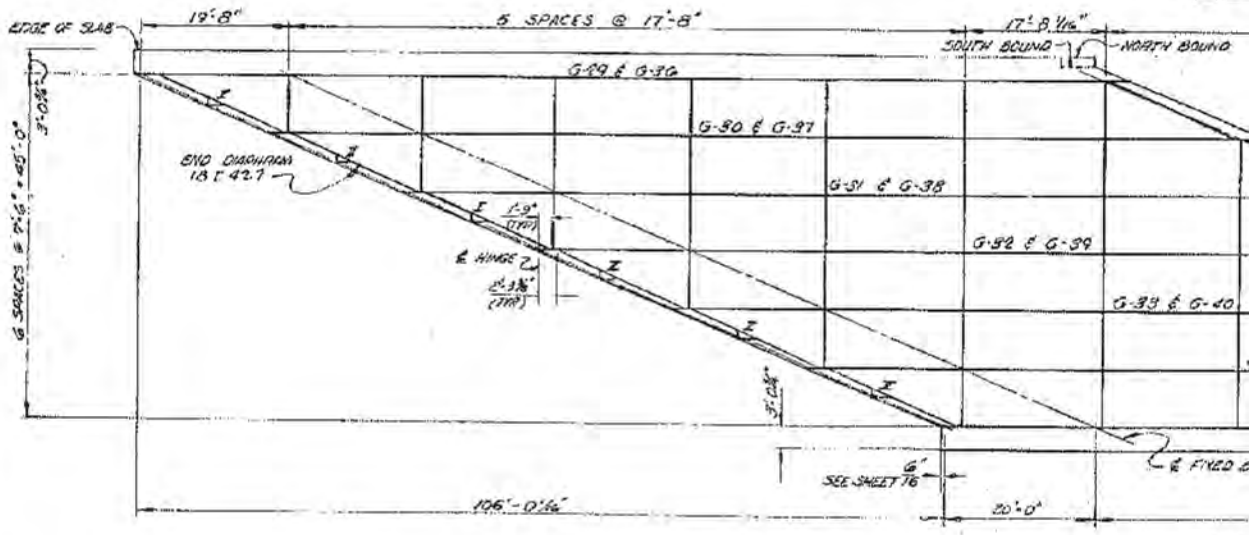
EDGE OF SLAB
19'-8"
5 SPACES @ 17'-8"
17'-8 1/16"
SOUTH BOUND
NORTH BOUND
G-29 & G-36
G-30 & G-37
G-31 & G-38
G-32 & G-39
G-33 & G-40
END DIAPHRAM
18" [ 42.7
℄ HINGE
6 SPACES @ 7'-6" = 45'-0"
SEE SHEET T6
106'-0 1/16"
20'-0"

| FED. ROAD DIST. NO. | STATE | FED. AID PROJ. NO. | FISCAL YEAR | SHEET NO. | TOTAL SHEETS |
|---|---|---|---|---|---|
| U-T. | UTAH | | | | |

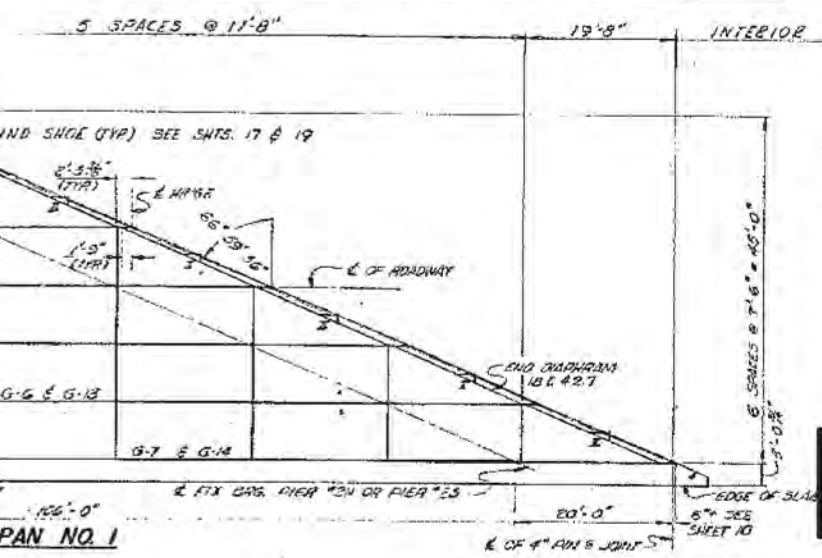


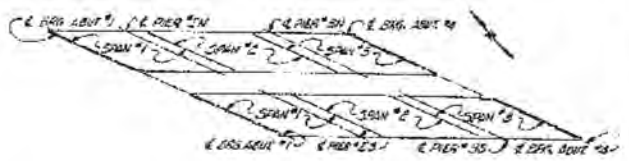


FRAMING PLAN

NO SCALE

**FOR INFORMATION ONLY**

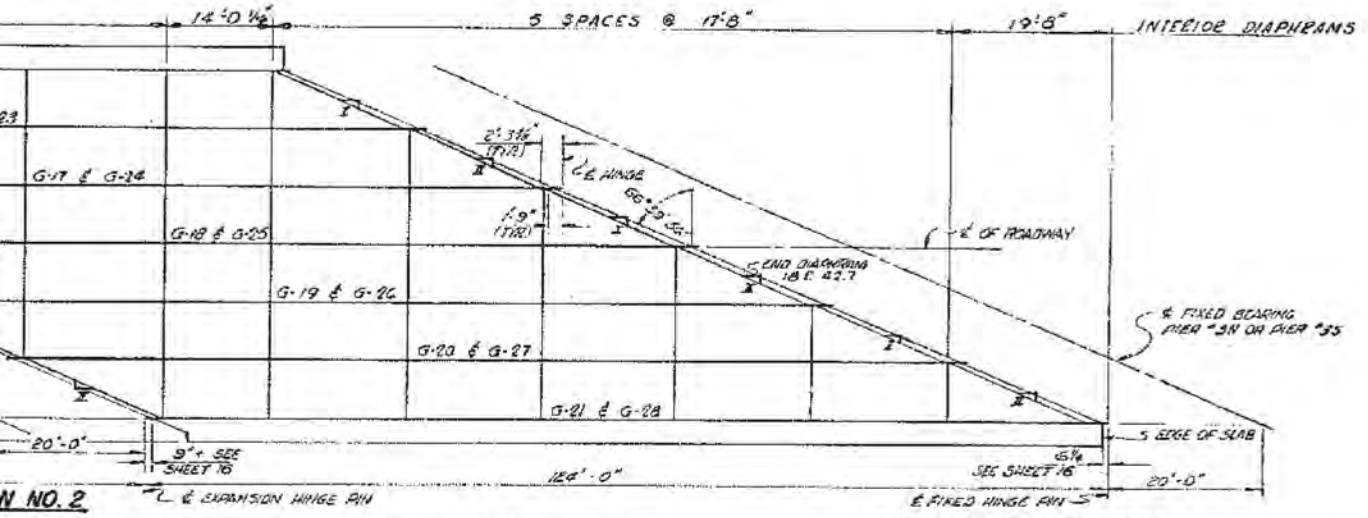


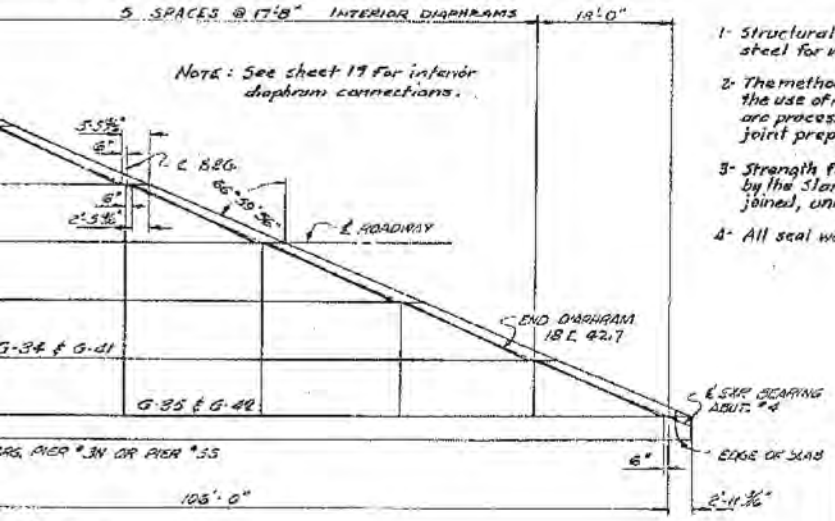


## STRUCTURAL STEEL NOTES

1- Structural steel for welding shall conform to the specifications for structural steel for welding of A.A.S.H.O. M-165 (A.S.T.M. A-373) or M-183 (A-36)

2- The methods of joint preparation for welding shown on the plans are based on the use of manually shielded arc welding. In the event that automatic submerged arc processes are used, the contractor may submit alternative methods of joint preparation for approval of the Engineer.

3- Strength fillet weld or alternate shall be the minimum sized welds required by the Standard Specifications of the A.W.S. for thickness of the material joined, unless otherwise specified.

4- All seal weld shall be minimum 3/16" fillet.

FRAMING PLAN

REGISTERED PROFESSIONAL ENGINEER NO. 2388 H. JACK LEWIS STATE OF UTAH

SHEET 15 OF 24 SHEETS

UTAH STATE ROAD COMMISSION
SALT LAKE CITY, UTAH
BRIDGE DEPARTMENT

INTERSTATE OVER UNION PACIFIC R.R.
390'-0 7/8" O. TO O. 67° X ING ∠
STA 57+94.70 ∠G-15-6(20)277
LEHI-PROVO UTAH COUNTY

DESIGNED BY G.K.K. SCALE 3/16" = 1'-0"
DRAWN BY G.K. ISSUED June 15, 1963
TRACED BY G.W. APPROVED
CHECKED BY G.K.K. & G.W. CHIEF BRIDGE ENGINEER
NO. NO. C-341

DESIGN AND DRAWING BY
WESTERN ENGINEERS, INC. AND
EDWARDS AND KELCEY
CONSULTING ENGINEERS

SUBMITTED BY CHIEF ENGINEER
UTAH ENGR. INC. NO. 3782

STRUCTURE I-C

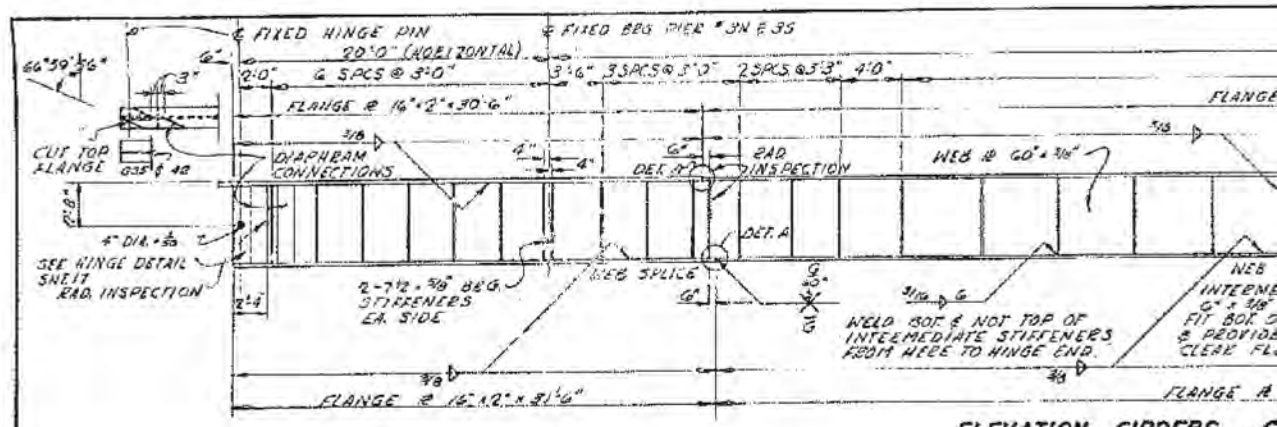


ELEVATION GIRDERS G

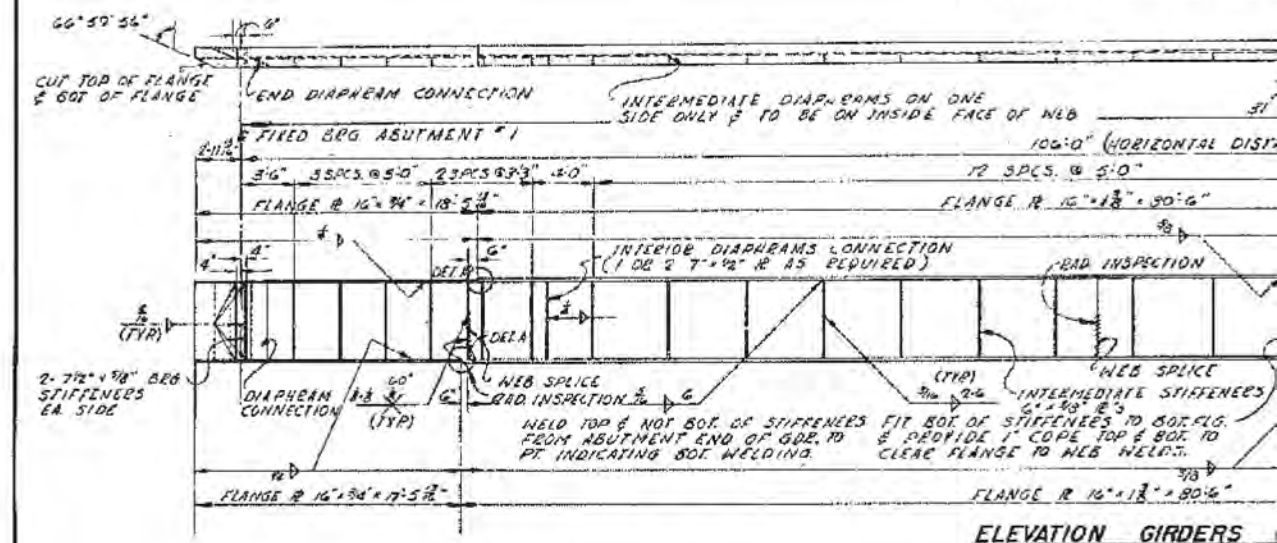


ELEVATION GIRDERS

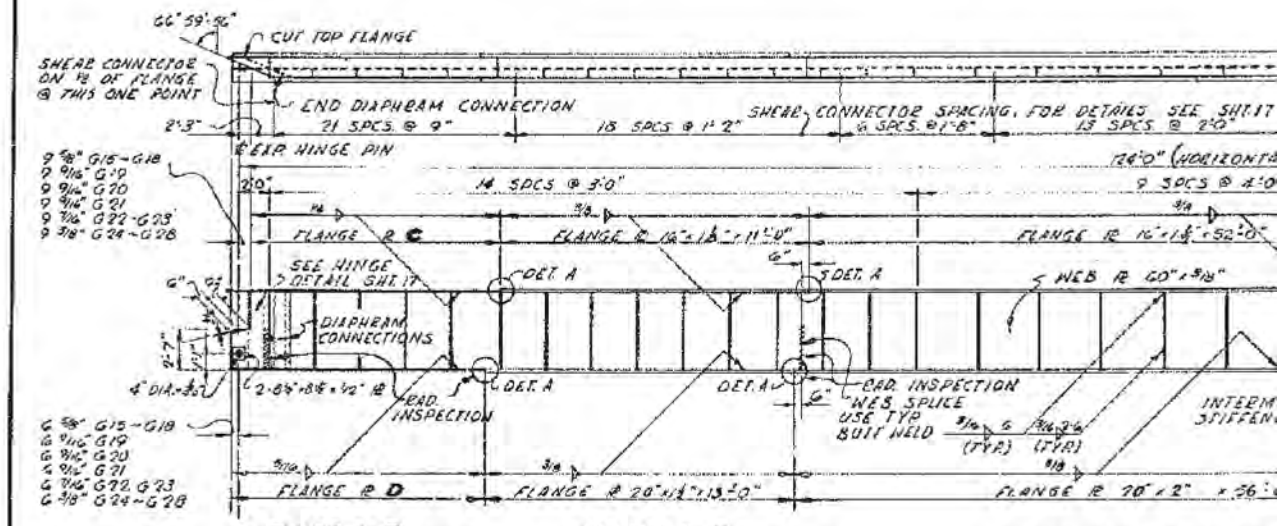


| FLANGE PL D | FLANGE PL C |
|---|---|
| 20" x 1" x 21'-6 5/8" G15 ~ G18 | 16" x 3/4" x 24'-2 5/8" G15 ~ G18 |
| 20" x 1" x 21'-6 9/16" G19 | 16" x 3/4" x 24'-2 11/16" G19 |
| 20" x 1" x 21'-6 9/16" G20 | 16" x 3/4" x 24'-2 9/16" G20 |
| 20" x 1" x 21'-6 9/16" G21 | 16" x 3/4" x 24'-2 9/16" G21 |
| 20" x 1" x 21'-6 7/16" G22, G23 | 16" x 3/4" x 24'-2 9/16" G22, G23 |
| 20" x 1" x 21'-6 5/8" G24 ~ G28 | 16" x 3/4" x 24'-2 5/8" G24 ~ G28 |

ELEVATION GIRDERS

[redacted]

FOR INF

02-MAY-2005 DGN Files 3P, PWPadmin\16721\4433_C-041-16_Formlocation

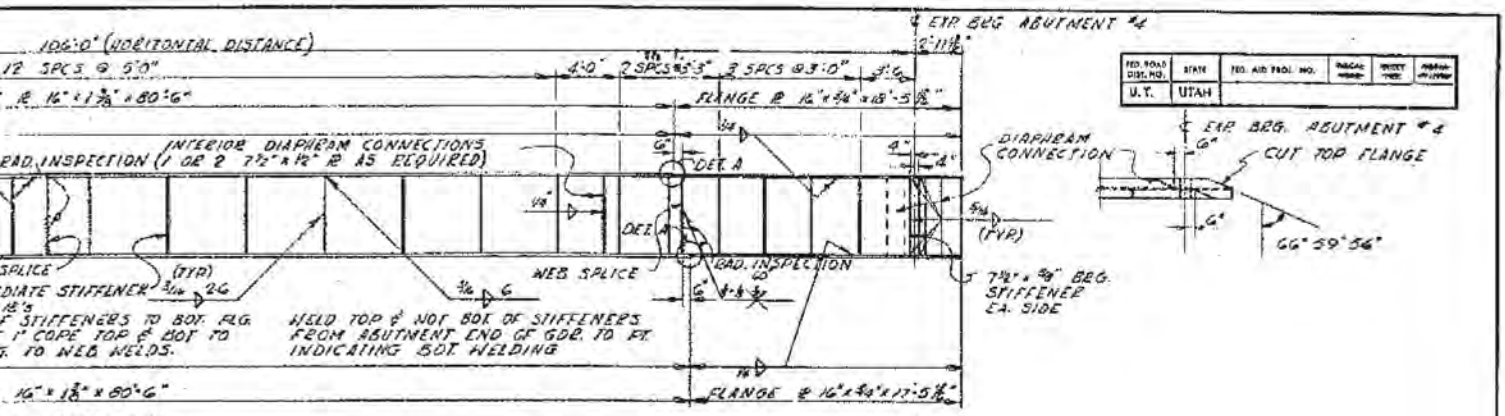


| FED. ROAD DISTR. NO. | STATE | FED. AID PROJ. NO. |
|---|---|---|
| U.T. | UTAH | |

## G29 THRU G42

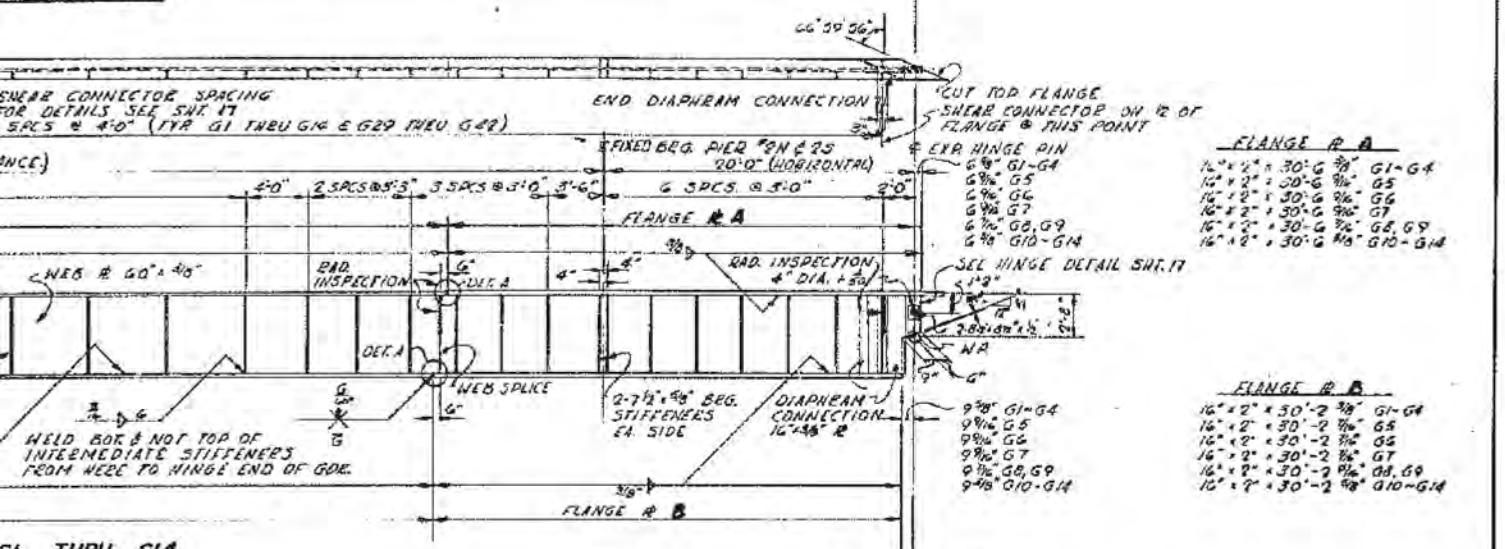


| FLANGE PL A | |
|---|---|
| 16" x 2" x 30'-6 3/8" | G1-G4 |
| 16" x 2" x 30'-6 9/16" | G5 |
| 16" x 2" x 30'-6 9/16" | G6 |
| 16" x 2" x 30'-6 9/16" | G7 |
| 16" x 2" x 30'-6 7/16" | G8, G9 |
| 16" x 2" x 30'-6 5/16" | G10-G14 |

| FLANGE PL B | |
|---|---|
| 16" x 2" x 30'-2 3/8" | G1-G4 |
| 16" x 2" x 30'-2 7/16" | G5 |
| 16" x 2" x 30'-2 7/16" | G6 |
| 16" x 2" x 30'-2 7/16" | G7 |
| 16" x 2" x 30'-2 9/16" | G8, G9 |
| 16" x 2" x 30'-2 5/8" | G10-G14 |

## G1 THRU G14

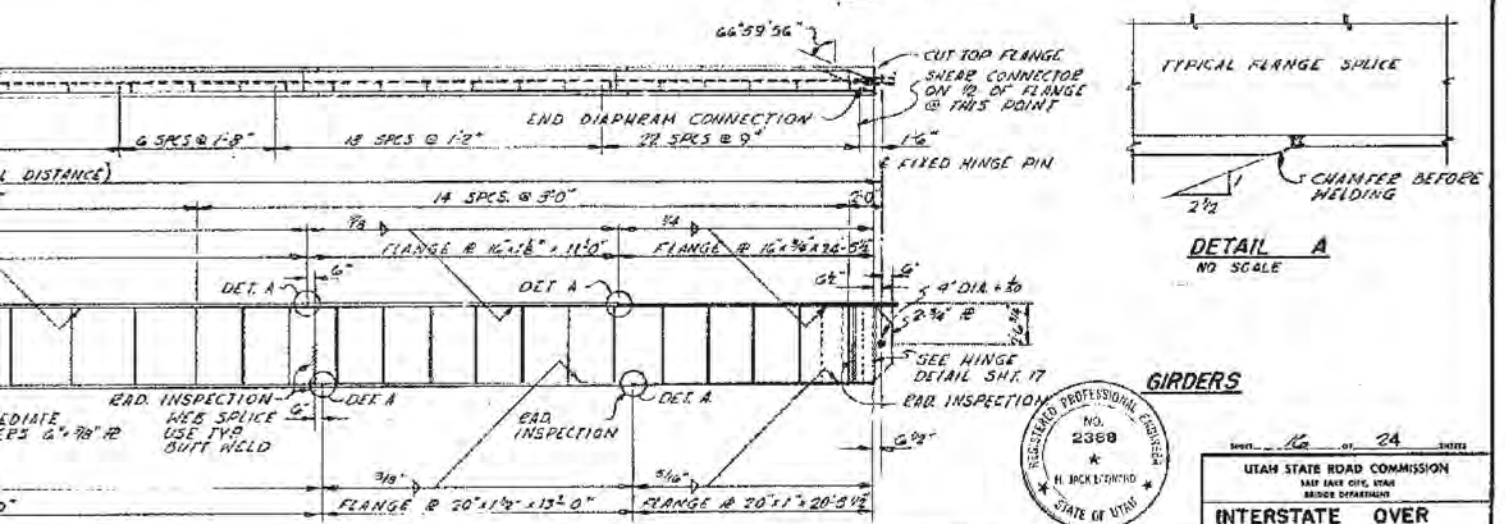





**DETAIL A**
NO SCALE

## G15 THRU G28

NOTE: FABRICATOR TO FURNISH ACCEPTABLE RADIOGRAPHIC PLATES FOR ALL TENSION WELDS IN FLANGES AND IN TENSILE REGIONS OF WEB SPLICES AS SHOWN ON THIS SHEET.
//////// - INDICATES WHICH HALF OF WEB TO INSPECT.

REGISTERED PROFESSIONAL ENGINEER NO. 2368 H. JACK LEONARD STATE OF UTAH

DESIGN AND DRAWING BY
WESTERN ENGINEERS, INC. AND
EDWARDS AND KELCEY
CONSULTING ENGINEERS

SUBMITTED BY: [signature] CHIEF ENGINEER
UTAH SHEET NO. 2 T.F.S.

**GIRDERS**

SHEET 16 OF 24 SHEETS

UTAH STATE ROAD COMMISSION
SALT LAKE CITY, UTAH
BRIDGE DEPARTMENT

INTERSTATE OVER
UNION PACIFIC R.R.
390'-0 7/8" O. TO O. 67° X ING ∠
STA. 57+34.70 IG-15-6 (20) E.77
LEHI-PROVO UTAH COUNTY

DESIGNED BY K.Y. SCALE 3/16"=1'-0"
DRAWN BY B.C. ISSUED
TRACED BY B.K. APPROVED
CHECKED BY CHIEF BRIDGE ENGINEER
BY
NO.
DWG. NO. C-341

STRUCTURE I-5

**ORMATION ONLY**

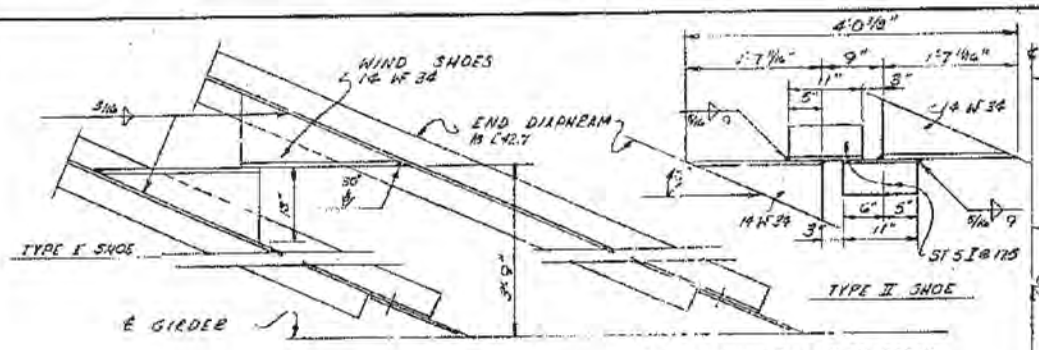


**PLAN WIND SHOES**
SCALE: 1" = 1'-0"

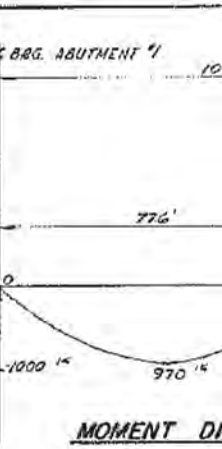


**MOMENT DI**

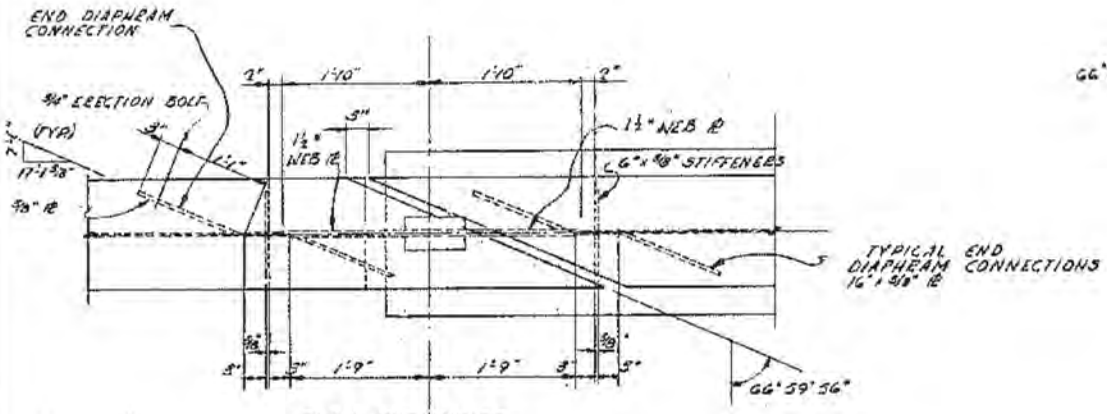


**PLAN EXP. HINGE**
SCALE: 1" = 1'-0"

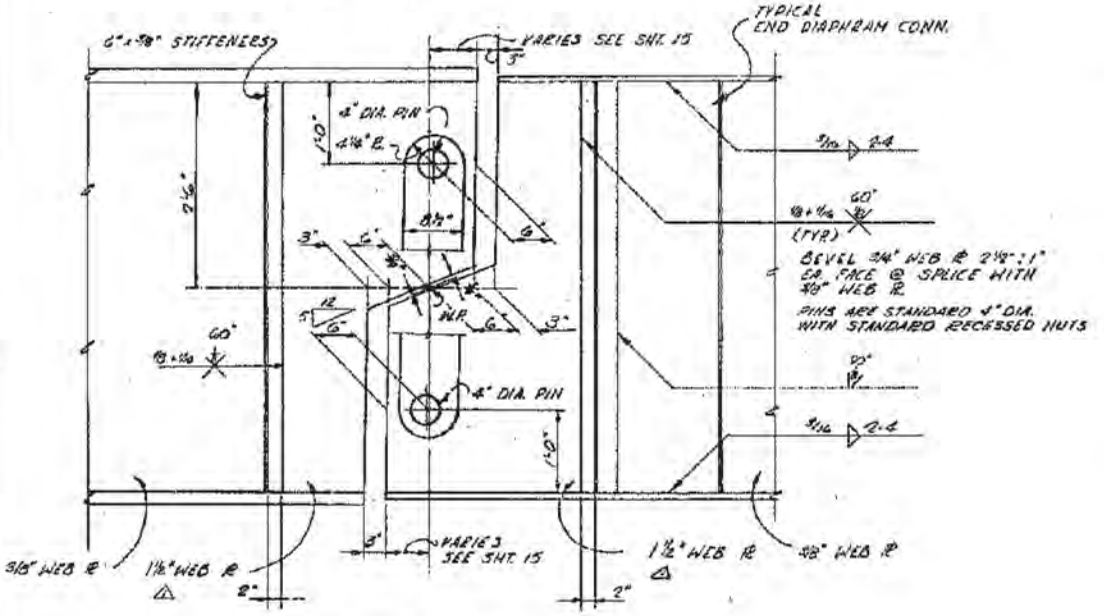


**ELEVATION EXP. HINGE**
SCALE: 1" = 1'-0"

DGN File: IP_PWPlans11672\A4433_C-341-17_Form1.dgn
BS-HWY-2695

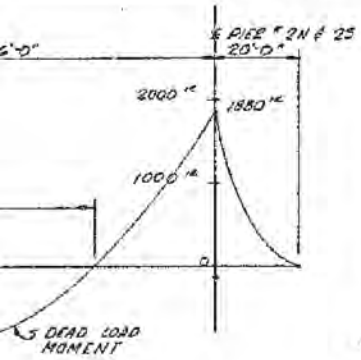


AGRAM

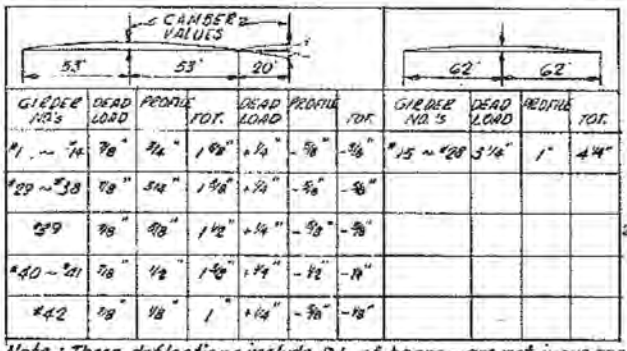


| GIRDER NO.'S | DEAD LOAD | PROFILE | TOT. | DEAD LOAD | PROFILE | TOT. | GIRDER NO.'S | DEAD LOAD | PROFILE | TOT. |
|---|---|---|---|---|---|---|---|---|---|---|
| #1 ~ #14 | 7/8" | 3/4" | 1 5/8" | +1/4" | -5/8" | -3/8" | #15 ~ #28 | 3 1/4" | 1" | 4 1/4" |
| #29 ~ #38 | 7/8" | 5/4" | 1 5/8" | +1/4" | -5/8" | -3/8" | | | | |
| #39 | 7/8" | 5/8" | 1 1/2" | +1/4" | -5/8" | -3/8" | | | | |
| #40 ~ #41 | 7/8" | 1/2" | 1 5/8" | +1/4" | -1/2" | -1/4" | | | | |
| #42 | 7/8" | 1/8" | 1" | +1/4" | -3/8" | -1/8" | | | | |

* Note: These deflections include D.L. of beam - are not increased by 1.25 and are not used for screed elev. sheets 24-25

BEAM CAMBER SCHEDULE

| FED. ROAD DIST. NO. | STATE | PROJ. NO. | SHEET NO. | TOTAL SHEETS |
|---|---|---|---|---|
| U.T. | UTAH | | | |

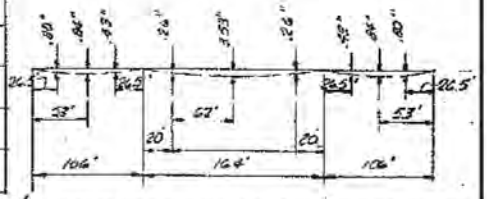


DEFLECTIONS SHOWN ARE DUE SUPER-STRUCTURE DEAD LOAD. (See note *)

DEFLECTION DIAGRAM

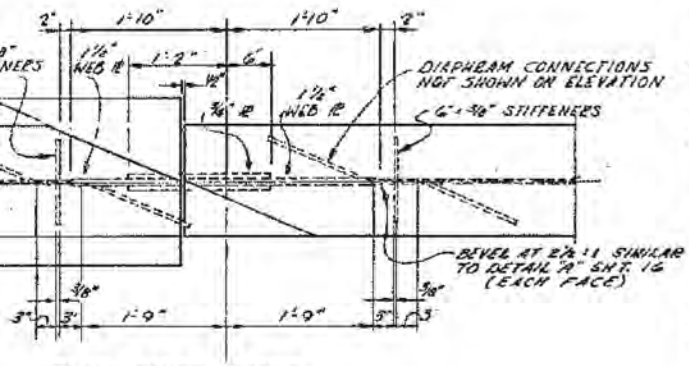


PLAN FIXED HINGE
SCALE: 1"=1'-0"

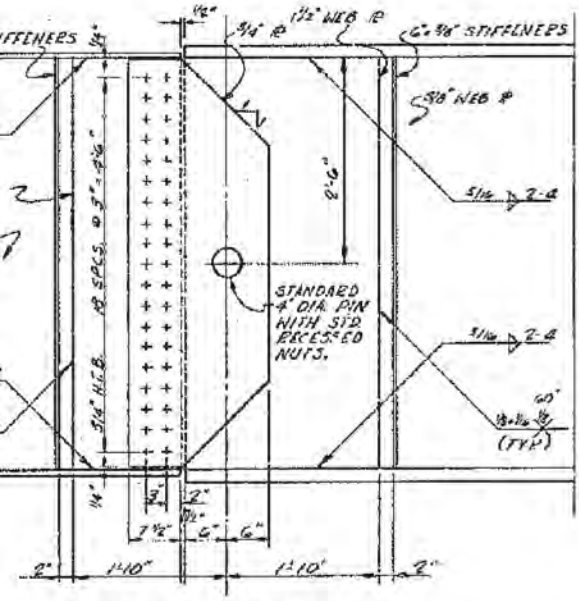


ELEVATION FIXED HINGE
SCALE: 1"= 1'-0"

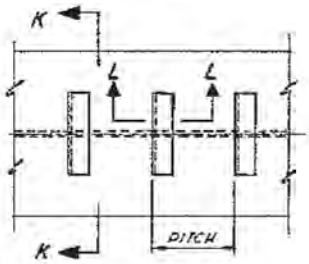


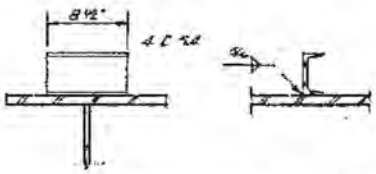


SHEAR CONNECTOR NOTE:

PAYMENT IS BASED ON THE WT. OF 4-3/4"ϕ STUD CONNECTORS. EQUIVALENT CONNECTORS AS INDICATED IN THE TABLE BELOW MAY BE USED @ THE SAME SPCNG.

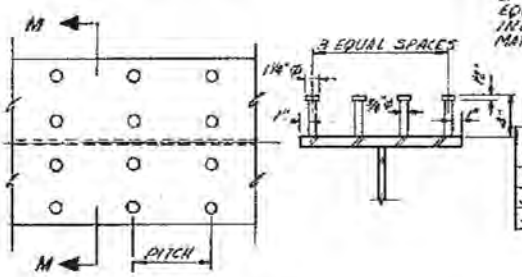


| EQUIVALENT CONNECTOR | SHEAR CAPACITY |
|---|---|
| 4-3/4"ϕ STUDS x 4" | 10.17 k |
| 3-3/4"ϕ STUDS x 4" | 10.58 k |
| 4 L 3x3 x 0'-8 1/2" | 10.40 k |

SHEAR CONNECTOR DETAILS
NO SCALE

**FOR INFORMATION ONLY**

GIRDER DETAILS

| NO | BY | Date | Remarks |
|---|---|---|---|
| 1 | JRCP | 3-11-63 | change web ℞ from 3/4" to 1 1/2" |

REVISIONS

REGISTERED PROFESSIONAL ENGINEER NO. 2368 H. BECK LEONARD STATE OF UTAH

DESIGN AND DRAWING BY
WESTERN ENGINEERS, INC. AND
EDWARDS AND KELCEY
CONSULTING ENGINEERS

SUBMITTED BY H. Jack Howard CHIEF ENGINEER
STATE ENGR. LIC. NO. 2-258

SHEET 17 OF 24 SHEETS

UTAH STATE ROAD COMMISSION
SALT LAKE CITY, UTAH
BUREAU OF BRIDGES

INTERSTATE OVER
UNION PACIFIC R. R.
390'-0 7/8" Q TO Q 67° X ING ∠ 3 Cont.
STA. 574 9470 EG-15-6(6) 277
LEHI-PROVO UTAH COUNTY

DESIGNED BY ASR SCALE 1"=1'-0"
DRAWN BY RK ISSUED D.L. H.L.S.
TRACED BY RK APPROVED D.L. Sargent
CHECKED BY RK CHIEF BRIDGE ENGINEER
SR. NO. DWG. NO. C-341

STRUCTURE 1-C

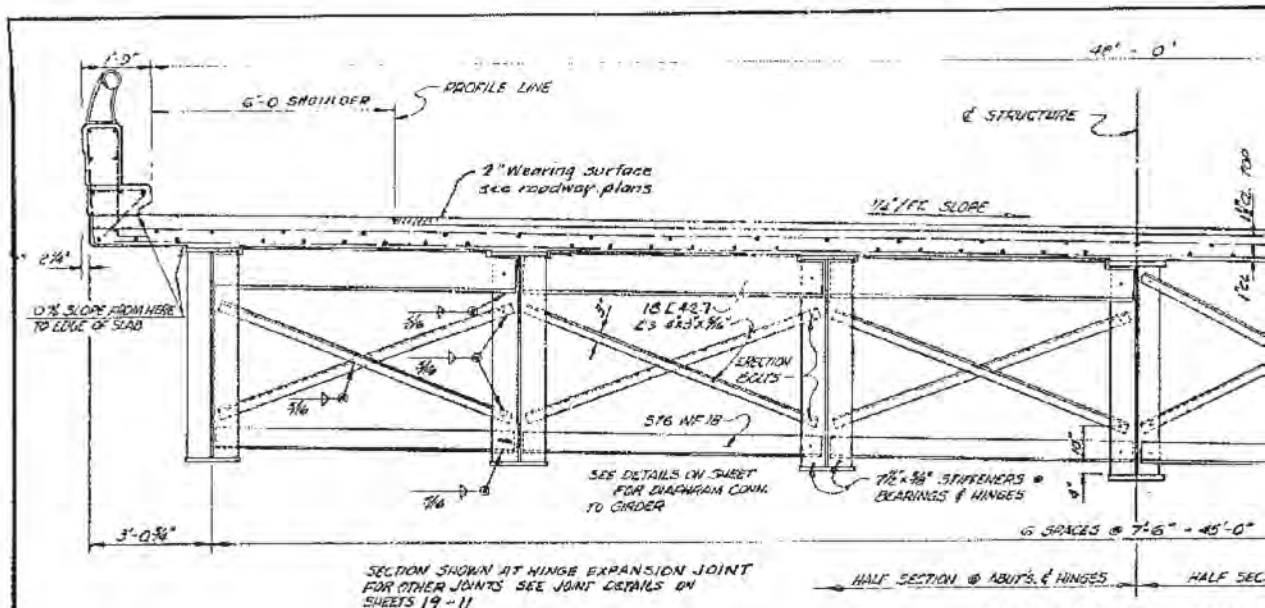


**TRANSVERSE SECTION**
SCALE: 1/2" = 1'-0"

**FOR INFORMATION ONLY**

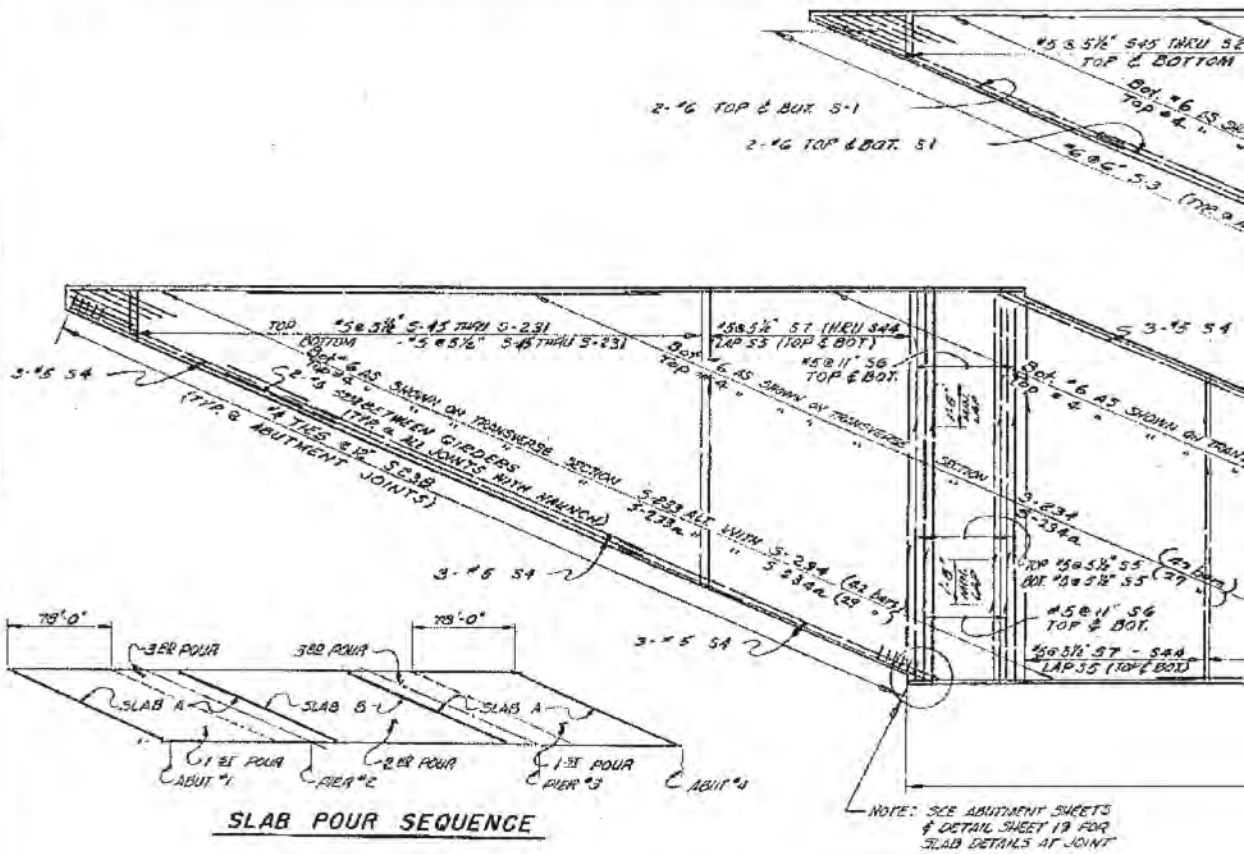


**SLAB POUR SEQUENCE**

DGN Files IP: PWPubns\16721\4433.C-041-18.Formlayout
02-MAY-2005

| FED. ROAD PROJ. NO. | STATE | FED. AID PROJ. NO. | | | |
|---|---|---|---|---|---|
| U.T. | UTAH | | | | |

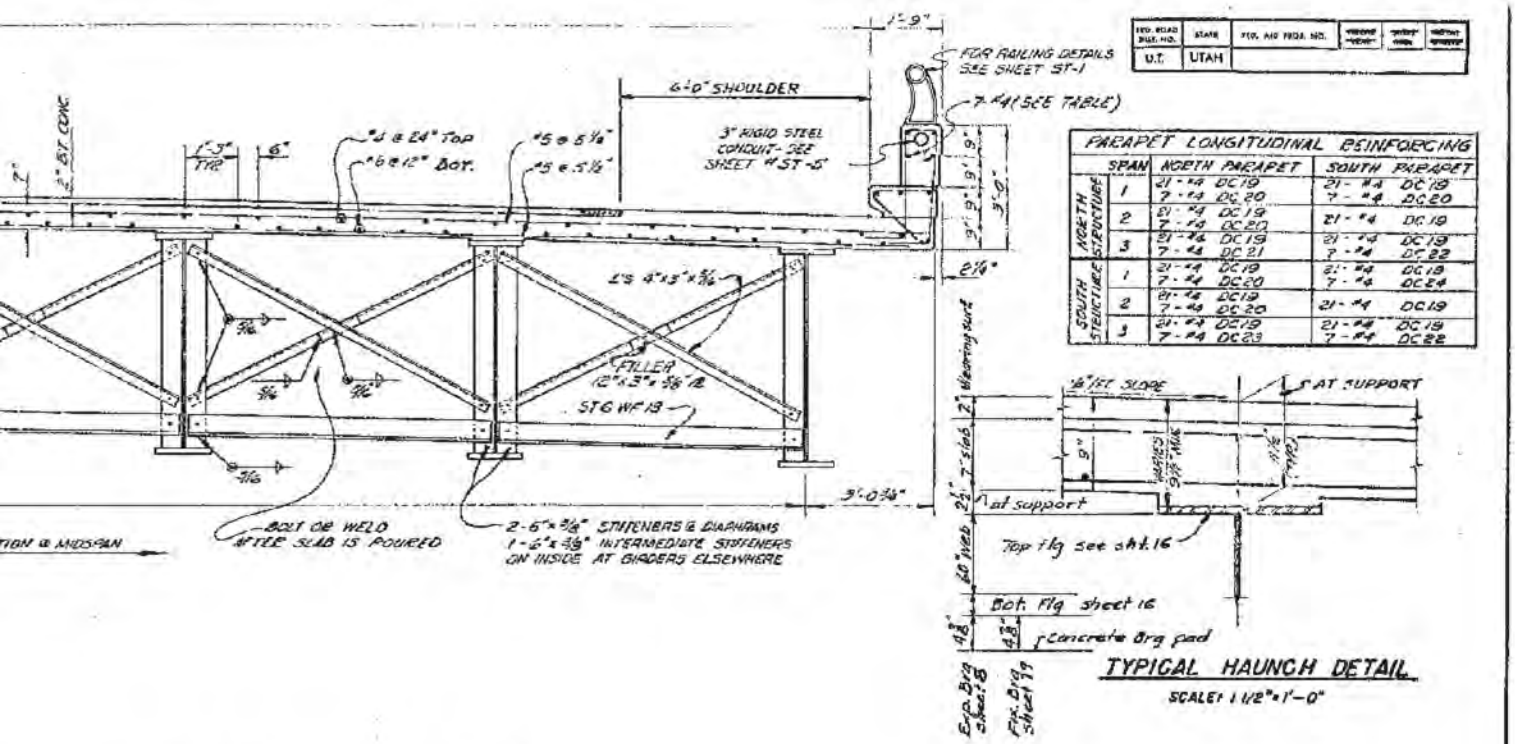


| | SPAN | NORTH PARAPET | SOUTH PARAPET |
|---|---|---|---|
| NORTH STRUCTURE | 1 | 21-#4 DC19<br>7-#4 DC20 | 21-#4 DC19<br>7-#4 DC20 |
| | 2 | 21-#4 DC19<br>7-#4 DC20 | 21-#4 DC19 |
| | 3 | 21-#4 DC19<br>7-#4 DC21 | 21-#4 DC19<br>7-#4 DC22 |
| SOUTH STRUCTURE | 1 | 21-#4 DC19<br>7-#4 DC20 | 21-#4 DC19<br>7-#4 DC24 |
| | 2 | 21-#4 DC19<br>7-#4 DC20 | 21-#4 DC19 |
| | 3 | 21-#4 DC19<br>7-#4 DC23 | 21-#4 DC19<br>7-#4 DC22 |

PARAPET LONGITUDINAL REINFORCING




## TYPICAL HAUNCH DETAIL

SCALE: 1 1/2" = 1'-0"

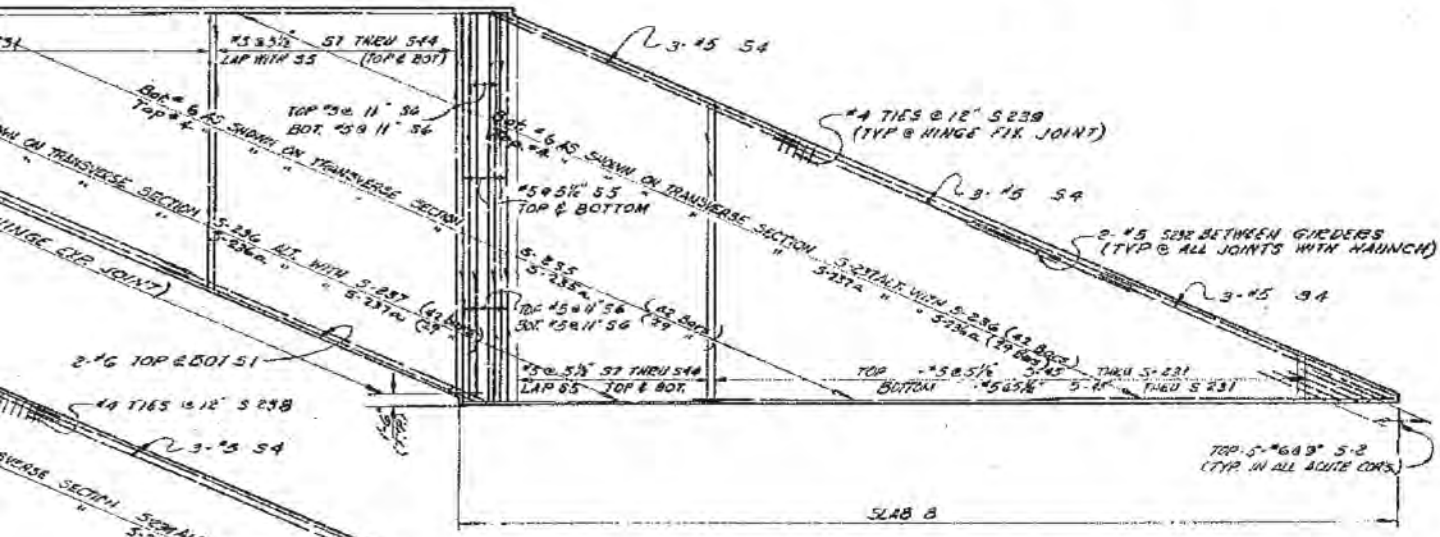


## TRANSVERSE SECTION B DECK SLAB

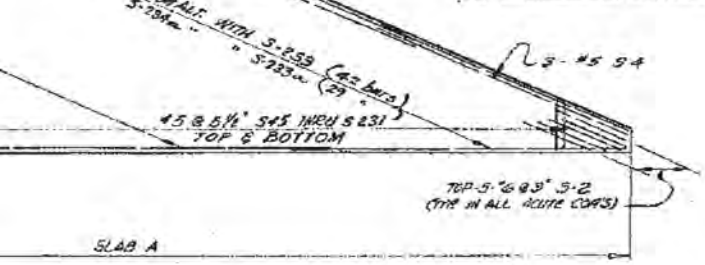


## SLAB REINFORCING

SCALE: 3/32" = 1'-0"

SHEET 18 OF 24 SHEETS

UTAH STATE ROAD COMMISSION
SALT LAKE CITY, UTAH
BRIDGE DEPARTMENT

INTERSTATE OVER UNION PACIFIC R.R.
390'-0 3/8" O. TO O. 67" X 1NG ∠
STA. 574-5470 I 15-15-6 (202.277)
LEHI - PROVO UTAH COUNTY

DESIGNED BY K.K. SCALE AS SHOWN
DRAWN BY B.K. ISSUED
TRACED BY G.W. APPROVED
CHECKED BY B.K. CHIEF BRIDGE ENGINEER

BR. NO. DWG. NO. C-341

DESIGN AND DRAWING BY
WESTERN ENGINEERS, INC. AND
EDWARDS AND KELCEY
CONSULTING ENGINEERS

SUBMITTED BY CHIEF ENGINEER
UTAH HIGH. INC. NO. 2378

REGISTERED PROFESSIONAL ENGINEER NO. 2388 H. JACK LEONARD STATE OF UTAH

STRUCTURE 1-C

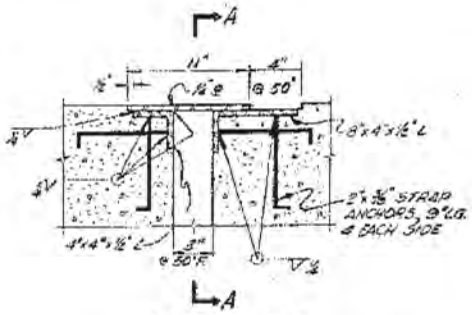


SECTION B-B

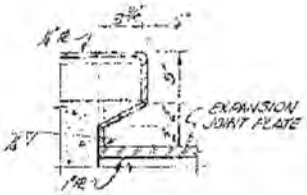


SECTION A-A

## SIDEWALK EXPANSION JOINT DETAILS

AT EXPANSION HINGE ONLY

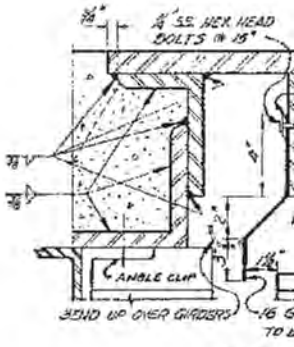


DETAIL

NO SCAL

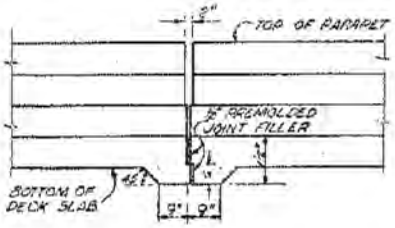


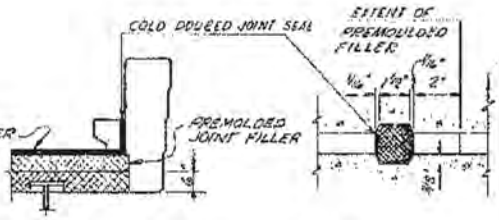


## SIDEWALK FIXED JOINT DETAILS

NO SCALE

NOTE:
DIMENSIONS FOR JOINT DETAIL ARE PERPENDICULAR TO ℄ HINGE. ALL ANGLE AND PLATE MEMBERS EXTEND FROM CURB TO CURB.

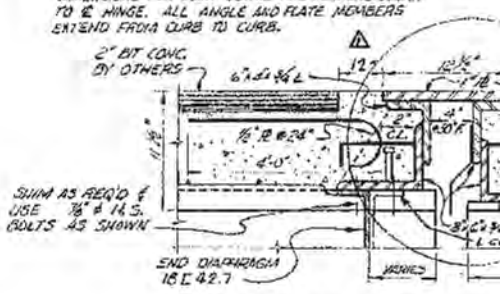


## HINGE EXPANSION JOI

NO SCALE

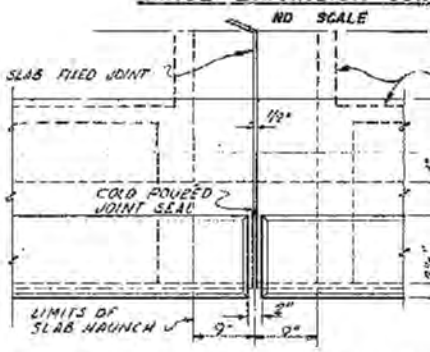


## CURB JOINT PLAN AT FIXED H

SCALE: 1" = 1'-0"

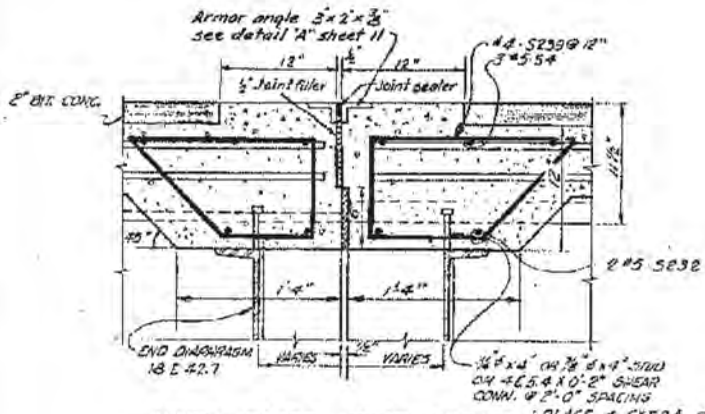


## HINGE FIXED JOINT DETAIL

SCALE: 1 1/2" = 1'-0"

PLACE 4 EXTRA SHEAR CONN. @ 0'-6" @ WIND SHOES.

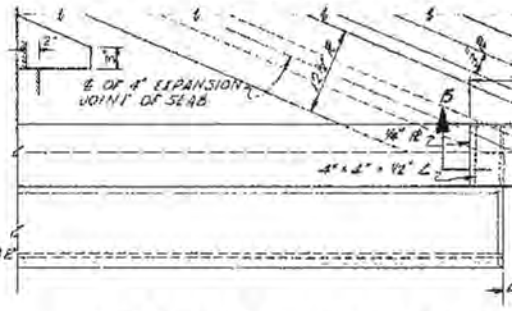


## CURB JOINT PLAN AT EXPANS

SCALE: 1" = 1'-0"

| FED. ROAD DIST. NO. | STATE | FED. AID PROJ. NO. | TYPEWR. WORK | SHEET NO. | TOTAL SHEETS |
|---|---|---|---|---|---|
| U-T | UTAH | | | | |

NOTE:
BEDDING SEAT BEARING AREAS (2" LARGER THAN MASONRY ℞) SHALL BE FINISHED HIGH AND RUBBED OR GROUND TO GRADE WITHIN A TOLERANCE OF ± 1/16". GROUTING NOT PERMITTED. SEE SHT. 8 FOR SOLE ℞ BEVEL.

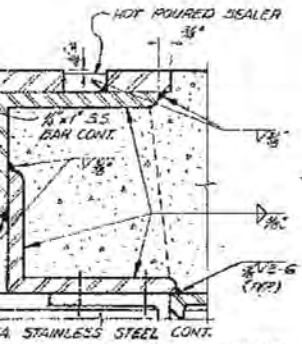


"A"

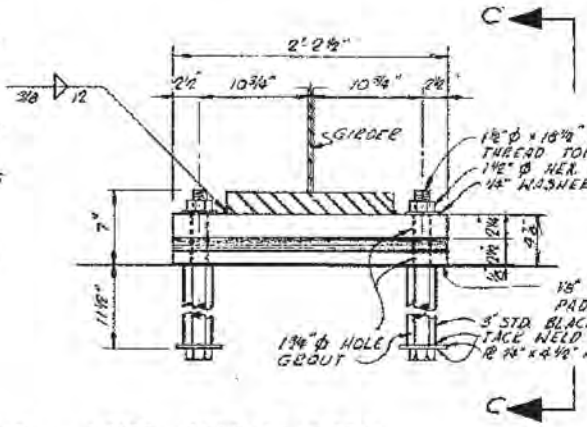


FIXED SHOE AT PIERS

SCALE: 1/2" = 1'-0"

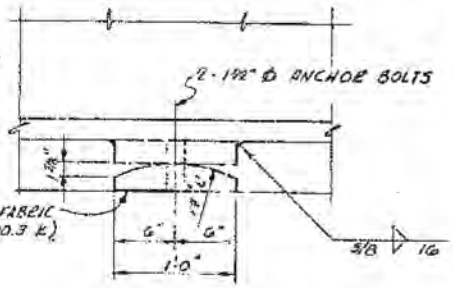


SECTION C-C

NOTE:
For Expansion Brg. See Sheet 8.

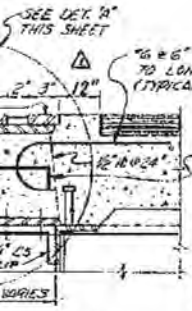


NT DETAIL

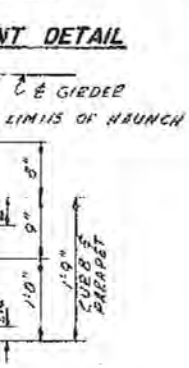


NGE

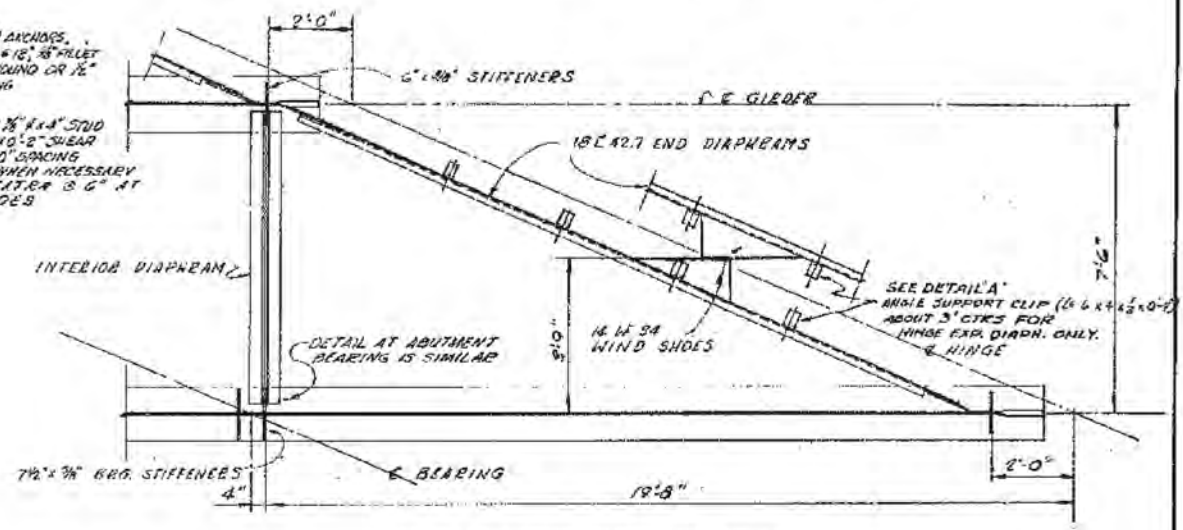


HINGE EXPANSION DIAPHRAGM SHOWN.

TYPICAL INTERIOR DIAPHRAGM CONNECTION

SCALE: 1/2" = 1'-0"

**FOR INFORMATION ONLY**

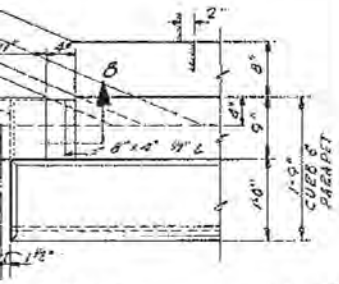


ION HINGE

DETAILS

| NO. | BY | DATE | REVISIONS |
|---|---|---|---|
| 1 | CGH | 6-5-63 | 4" changed to 12" |

REGISTERED PROFESSIONAL ENGINEER NO. 2388 H. DICKSTONHAM STATE OF UTAH

DESIGN AND DRAWING BY
WESTERN ENGINEERS, INC. AND
EDWARDS AND KELCEY
CONSULTING ENGINEERS

SUBMITTED BY _____ CHIEF ENGINEER
UTAH ENGR. LIC. NO. 2388

SHEET 19 OF 24 SHEETS

UTAH STATE ROAD COMMISSION
SALT LAKE CITY, UTAH
BRIDGE DEPARTMENT

INTERSTATE OVER
UNION PACIFIC R. R.
390'-0 7/8" O. TO O. 67° X ING ∠
STA. 576+94.70 EG-15-6(28)277
LEHI-PROVO UTAH COUNTY

5th Cont.

DESIGNED BY ASE SCALE AS SHOWN
DRAWN BY G.W., B.K. DATE
TRACED BY G.W., B.K. APPROVED
CHECKED BY CHIEF BRIDGE ENGINEER

BR. NO. BRG. NO. C-341

STRUCTURE 1-C

# BILL OF REINFORCI

| MARK | SIZE | LGTH. | NO. REQ. | TOTAL LENGTH | TYPE | A | B | C | D | E | F | G | H | J | K | O |
|---|---|---|---|---|---|---|---|---|---|---|---|---|---|---|---|---|
| | | | | | **APPROACH SLAB** | | | | | | | | | | | |
| AS 1 | 8 | 37-2 | 96 | 3568-0 | 1 | | | | | | | | | | | |
| AS 2 | 19 | 3-0 | 68 | 204-0 | | | | | | | | | | | | |
| AS 3 | 7 | 14-6 | 360 | 5220-0 | | | | | | | | | | | | |
| AS 4 | | 14-7½ | 8 | 113-8 | | | | | | | | | | | | |
| AS 5 | | 13-11 | 8 | 111-4 | | | | | | | | | | | | |
| AS 6 | | 13-1½ | 8 | 109-0 | | | | | | | | | | | | |
| AS 7 | | 13-4 | 8 | 106-8 | | | | | | | | | | | | |
| AS 8 | | 13-0½ | 8 | 104-4 | | | | | | | | | | | | |
| AS 9 | | 12-9 | 16 | 204-0 | 1 | | | | | | | | | | | |
| THRU | | | DECREASE | THESE CONSECUTIVE BARS BY 3½" EACH | | | | | | | | | | | | |
| AS 47 | 7 | 1-8 | 16 | 26-5 | 1 | | | | | | | | | | | |
| AS 48 | 5 | 40-0 | 120 | 4800-0 | | | | | | | | | | | | |
| AS 49 | 5 | 44-6 | 90 | 4205-0 | | | | | | | | | | | | |
| AS 50 | | 46-6 | 30 | 1395-0 | | | | | | | | | | | | |
| AS 51 | | 20-0 | 120 | 2400-0 | | | | | | | | | | | | |
| AS 52 | | 24-8 | 90 | 2220-0 | | | | | | | | | | | | |
| AS 53 | | 22-8 | 30 | 680-0 | | | | | | | | | | | | |
| AS 54 | | 37-2 | 32 | 1189-4 | | | | | | | | | | | | |
| AS 55 | | 14-6 | 244 | 3538-0 | | | | | | | | | | | | |
| AS 56 | | 14-0½ | 8 | 112-7 | | | | | | | | | | | | |
| AS 57 | | 13-1⅞ | 8 | 109-2 | | | | | | | | | | | | |
| AS 58 | | 13-2¾ | 8 | 105-9 | | | | | | | | | | | | |
| AS 59 | | 12-9½ | 16 | 204-8 | 1 | | | | | | | | | | | |
| THRU | | | DECREASE | THESE CONSECUTIVE BARS BY 5½" EACH | | | | | | | | | | | | |
| | | | | CUT BARS TO CLOSEST INCH | | | | | | | | | | | | |
| AS 84 | | 2-1⅞ | 16 | 33-10 | 1 | | | | | | | | | | | |
| AS 85 | 5 | 1-8¼ | 16 | 27-0 | 1 | | | | | | | | | | | |
| AS 86 | 5 | 12-0 | 8 | 96-0 | 4 | | 8-0 | 4-0 | | | | | | | | |
| | | | | | **DECK SLAB** | | | | | | | | | | | |
| S 1 | 6 | 44-0 | 48 | 2112-0 | 1 | | | | | | | | | | | |
| S 2 | 6 | 10-0 | 60 | 600-0 | 1 | | | | | | | | | | | |
| S 3 | 6 | 4-8 | 400 | 1866-8 | 2 | 8" | 4-0 | | | | | | | 6" | | |
| S 4 | 5 | 42-0 | 72 | 3024-0 | 1 | | | | | | | | | | | |
| S 5 | | 40-0 | 1316 | 52,640-0 | 1 | | | | | | | | | | | |
| S 6 | | 12-8 | 428 | 5424-4 | 1 | | | | | | | | | | | |
| S 7 | | 11-5 | 24 | 274-0 | 1 | | | | | | | | | | | |
| S 8 | | 11-2½ | 24 | 267-0 | 1 | | | | | | | | | | | |
| THRU | | | DECREASE | THESE CONSECUTIVE BARS BY 2⅜" EACH | | | | | | | | | | | | |
| | | | | CUT BARS TO CLOSEST INCH | | | | | | | | | | | | |
| S 43 | | 5-3⅜ | 24 | 126-9 | 1 | | | | | | | | | | | |
| S 44 | | 5-1 | 24 | 122-0 | 1 | | | | | | | | | | | |
| S 45 | | 42-4 | 24 | 1014-0 | 1 | | | | | | | | | | | |
| S 46 | | 42-1⅞ | 24 | 1007-9 | 1 | | | | | | | | | | | |
| THRU | | | DECREASE | THESE CONSECUTIVE BARS BY 2⅜" EACH | | | | | | | | | | | | |
| | | | | CUT BARS TO CLOSEST INCH | | | | | | | | | | | | |
| S 230 | | 5-2⅞ | 24 | 136-9 | 1 | | | | | | | | | | | |
| S 231 | 5 | 5-6 | 24 | 132-0 | 1 | | | | | | | | | | | |
| S 232 | 5 | 18-6 | 48 | 888-0 | 1 | | | | | | | | | | | |
| S 233 | 6 | 52-0 | 168 | 8736-0 | 1 | | | | | | | | | | | |
| S 234 | 6 | 40-0 | 336 | 13440-0 | 1 | | | | | | | | | | | |
| S 235 | 6 | 50-0 | 84 | 4200-0 | 1 | | | | | | | | | | | |
| S 236 | 6 | 40-0 | 84 | 3360-0 | 1 | | | | | | | | | | | |
| S 237 | 6 | 34-3 | 84 | 2877-0 | 1 | | | | | | | | | | | |
| S 238 | 4 | 5-9 | 464 | 2668-0 | 20 | 2-4 | 10" | 2-2 | 11" | 1-8 | 12" | 12" | | | | |
| S 239 | 4 | 5-0 | 464 | 2320-0 | 20 | 0-4 | 10" | 1-10 | 11" | 1-2 | 12" | 12" | | | | |
| CONTINUED IN LAST COLUMN | | | | | | | | | | | | | | | | |
| | | | | | **CURB & PARAPET** | | | | | | | | | | | |
| DC 1 | 5 | 7-7½ | 1220 | 9302-6 | 22 | | 1-0 | 2-10½ | 8" | 2-7 | | | 3½ | | | |
| DC 2 | | 3-1 | 1347 | 4153-6 | 21 | | 1-4½ | 1-8½ | | | | | 12 | | 12 | |
| DC 3 | | 5-10½ | 104 | 611-0 | 22 | | 0-0 | 2-10½ | 8" | 2-7 | | | 3½ | | | |
| DC 4 | | 5-6 | 4 | 22-0 | 22 | | 0-0 | 2-8½ | 7" | 2-5 | | | 3½ | | | |
| DC 5 | | 4-9 | 4 | 19-0 | 22 | | 0-0 | 2-5½ | 4" | 2-2 | | | 3½ | | | |
| DC 6 | | 6-5 | 100 | 641-8 | 22 | | 0-0 | 2-7 | 1-2 | 2-9 | | | 3 | | | |
| DC 7 | | 9-6 | 2 | 19-0 | 5 | | 4-6 | 4 | 4-6 | | | | | | | |
| DC 8 | 5 | 9-10 | 2 | 19-8 | 5 | | 4-6 | 1-1 | 4-6 | | | | | | | |

| MARK | SIZE | LGTH. | NO. REQ. | TOTAL LENGTH | TYPE | A | B | C | D |
|---|---|---|---|---|---|---|---|---|---|
| | | | | | **CURB & PARAPET** | | | | |
| DC 9 | 5 | 10-3 | 2 | 20-6 | 5 | | 4-6 | 1-6 | 4-6 |
| DC 10 | | 10-10 | 2 | 21-8 | 5 | | 4-6 | 2-1 | 4-6 |
| DC 11 | | 4-6 | 12 | 54-0 | 1 | | | | |
| DC 12 | | 6-5 | 4 | 25-8 | 1 | | | | |
| DC 13 | | 3-0 | 6 | 18-0 | 21 | | 1-6 | 1-6 | |
| DC 14 | | 3-0 | 2 | 6-0 | 6 | | 1-6 | 1-6 | 5" |
| DC 15 | | 6-3 | 2 | 12-6 | 1 | | | | |
| DC 16 | | 7-6 | 14 | 105-0 | 1 | | | | |
| DC 17 | 5 | 30-3 | 24 | 726-0 | | | | | |
| DC 18 | 4 | 9-6 | 8 | 76-0 | | | | | |
| DC 19 | | 40-0 | 268 | 10,680-0 | | | | | |
| DC 20 | | 9-2 | 35 | 320-10 | | | | | |
| DC 21 | | 10-2 | 7 | 71-2 | | | | | |
| DC 22 | | 13-9 | 14 | 192-6 | | | | | |
| DC 23 | | 5-1 | 7 | 35-7 | | | | | |
| DC 24 | | 15-4 | 7 | 107-4 | | | | | |
| DC 25 | | 40-2 | 9 | 361-6 | | | | | |
| DC 26 | | 19-11 | 9 | 179-3 | | | | | |
| DC 27 | | 40-0 | 9 | 360-0 | | | | | |
| DC 28 | | 20-10 | 9 | 187-6 | 1 | | | | |
| DC 29 | 4 | 7-7 | 9 | 68-3 | 1 | | | | |
| | | | | | **ABUTMENT NO. 1** | | | | |
| | | | | | (FOOTING) | | | | |
| IAF 1 | 9 | 7-0 | 128 | 896-0 | 4 | | 6-3 | 1-0 | |
| IAF 2 | 8 | 6-6 | 82 | 532-0 | 4 | | 5-9 | 1-0 | |
| IAF 3 | 6 | 6-6 | 260 | 1703-0 | 1 | | | | |
| IAF 4 | | 6-3 | 1 | 6-3 | | | | | |
| IAF 5 | | 6-0 | 1 | 6-0 | | | | | |
| IAF 6 | | 5-9 | 1 | 5-9 | | | | | |
| IAF 7 | | 5-6 | 1 | 5-6 | | | | | |
| IAF 8 | | 5-3 | 1 | 5-3 | | | | | |
| IAF 9 | | 5-0 | 1 | 5-0 | | | | | |
| IAF 10 | | 4-9 | 1 | 4-9 | | | | | |
| IAF 11 | | 4-6 | 1 | 4-6 | | | | | |
| IAF 12 | | 4-3 | 1 | 4-3 | | | | | |
| IAF 13 | | 4-0 | 1 | 4-0 | | | | | |
| IAF 14 | | 3-9 | 1 | 3-9 | | | | | |
| IAF 15 | | 3-6 | 1 | 3-6 | | | | | |
| IAF 16 | | 3-3 | 1 | 3-3 | | | | | |
| IAF 17 | | 2-0 | 5 | 10-0 | | | | | |
| IAF 18 | | 2-9 | 1 | 2-9 | | | | | |
| IAF 19 | 6 | 2-6 | 1 | 2-6 | 1 | | | | |
| IAF 20 | 5 | 40-0 | 42 | 1680-0 | | | | | |
| IAF 21 | | 19-0 | 10 | 190-0 | | | | | |
| IAF 22 | | 22-0 | 32 | 704-0 | | | | | |
| IAF 23 | | 24-6 | 20 | 490-0 | | | | | |
| IAF 24 | | 38-8 | 10 | 388-8 | | | | | |
| IAF 25 | | 6-6 | 363 | 2359-6 | | | | | |
| IAF 26 | | 5-9 | 1 | 5-9 | | | | | |
| IAF 27 | | 5-0 | 1 | 5-0 | | | | | |
| IAF 28 | | 4-3 | 1 | 4-3 | | | | | |
| IAF 29 | | 3-6 | 1 | 3-6 | | | | | |
| IAF 30 | | 2-9 | 1 | 2-9 | | | | | |
| IAF 31 | | 3-9 | 214 | 802-6 | 1 | | | | |
| IAF 32 | | 6-8 | 172 | 1146-8 | 4 | | 5-9 | 1-0 | |
| IAF 33 | | 8-5 | 14 | 131-10 | 1 | | | | |
| IAF 34 | | 8-4 | 50 | 416-8 | 1 | | | | |
| IAF 35 | | 5-10 | 33 | 192-6 | 1 | | | | |
| IAF 36 | | 4-1 | 30 | 122-6 | 1 | | | | |
| IAF 37 | | 3-3 | 12 | 39-0 | 1 | | | | |
| IAF 38 | 5 | 7-6 | 133 | 997-6 | 1 | | | | |
| | | | | | (ABUTMENT) | | | | |
| IA 1 | 9 | 14-1 | 22 | 309-10 | 1 | | | | |
| IA 2 | 9 | 13-11 | 24 | 334-0 | 1 | | | | |
| IA 3 | 9 | 13-8 | 28 | 382-8 | 1 | | | | |
| IA 4 | 9 | 13-6 | 28 | 378-0 | 1 | | | | |
| IA 5 | 9 | 13-4 | 26 | 346-8 | 1 | | | | |
| IA 6 | 6 | 4-0 | 244 | 976-0 | 4 | | 2-0 | 2-0 | |
| IA 7 | 5 | 27-8 | 40 | 1106-8 | 1 | | | | |
| IA 8 | 5 | 25-8 | 20 | 513-4 | 1 | | | | |



DGN Files IP: PWPadmin\16721\4433.C-041-28_Form1.dgn
02-MAY-2005

# NG STEEL

| E | F | G | H | J | K | O | MARK | SIZE | LGTH. | NO. REQ. | TOTAL LENGTH | TYPE | A | B | C | D | E | F | G | H | J | K | O |
|---|---|---|---|---|---|---|---|---|---|---|---|---|---|---|---|---|---|---|---|---|---|---|---|
| ONT'D. | | | | | | | | | | | ABUT. #1 - ABUTMENT CONT'D. | | | | | | | | | | | | |
| | | | | | | | 1A 9 | 5 | 23-8 | 20 | 473-4 | 1 | | | | | | | | | | | |
| | | | | | | | 1A10 | | 20-1 | 22 | 441-10 | | | | | | | | | | | | |
| | | | | | | | 1A 11 | | 14-1 | 15 | 211-3 | | | | | | | | | | | | |
| | | | | | | | 1A 12 | | 12-11 | 16 | 222-8 | | | | | | | | | | | | |
| | | | 12" | | 5" | | 1A 13 | | 13-8 | 19 | 259-8 | | | | | | | | | | | | |
| 12" | | | | | | | 1A 14 | | 13-6 | 19 | 256-6 | | | | | | | | | | | | |
| | | | | | | | 1A 15 | | 13-4 | 22 | 293-4 | | | | | | | | | | | | |
| | | | | | | | 1A 16 | | 28-8 | 56 | 1605-4 | | | | | | | | | | | | |
| | | | | | | | 1A 17 | | 16-0 | 12 | 192-0 | | | | | | | | | | | | |
| | | | | | | | 1A 18 | | 11-2 | 57 | 636-6 | | | | | | | | | | | | |
| | | | | | | | 1A 19 | | 10-4½ | 57 | 591-4½ | | | | | | | | | | | | |
| | | | | | | | 1A 20 | | 9-5 | 57 | 536-9 | | | | | | | | | | | | |
| | | | | | | | 1A 21 | | 8-7½ | 57 | 491-7½ | | | | | | | | | | | | |
| | | | | | | | 1A 22 | | 8-0½ | 33 | 265-4½ | 1 | | | | | | | | | | | |
| | | | | | | | 1A 23 | | 7-11 | 4 | 31-8 | 4 | | 2-3 | 6-3 | | | | | | | | |
| | | | | | | | 1A 24 | 5 | 7-5 | 12 | 89-0 | 4 | | 5-9 | 1-9 | | | | | | | | |
| | | | | | | | | | | | ABUT. #1 - RETAINING WALL | | | | | | | | | | | | |
| | | | | | | | 1AR 1 | 8 | 14-8 | 41 | 601-4 | 1 | | | | | | | | | | | |
| | | | | | | | 1AR 2 | 8 | 14-0 | 41 | 574-0 | 1 | | | | | | | | | | | |
| | | | | | | | 1AR 3 | 5 | 30-3 | 38 | 1149-6 | 1 | | | | | | | | | | | |
| | | | | | | | 1AR 4 | 5 | 14-8 | 20 | 293-4 | 1 | | | | | | | | | | | |
| | | | | | | | 1AR 5 | 5 | 14-0 | 20 | 280-0 | 1 | | | | | | | | | | | |
| | | | | | | | | | | | ABUT #1 - NORTH WINGWALL FOOTING | | | | | | | | | | | | |
| | | | | | | | 1AF 40 | 5 | 6-7 | 36 | 237-0 | 4 | | 5-9 | 1-0 | | | | | | | | |
| | | | | | | | 1AF 41 | 5 | 34-9 | 10 | 347-6 | | | | | | | | | | | | |
| | | | | | | | 1AF 42 | 5 | 6-6 | 71 | 461-6 | | | | | | | | | | | | |
| | | | | | | | 1AF 43 | 5 | 2-9 | 23 | 63-3 | | | | | | | | | | | | |
| | | | | | | | | | | | ABUT #1 - NORTH WINGWALL | | | | | | | | | | | | |
| | | | | | | | 1AW 1 | 5 | 40-5 | 4 | 161-8 | 1 | | | | | | | | | | | |
| | | | | | | | 1AW 2 | 5 | 37-3 | 2 | 74-6 | 1 | | | | | | | | | | | |
| | | | | | | | 1AW 3 | 5 | 34-0 | 2 | 68-0 | 1 | | | | | | | | | | | |
| | | | | | | | 1AW 4 | 5 | 34-0 | 4 | 136-0 | 1 | | | | | | | | | | | |
| | | | | | | | | | | | DECK SLAB CONTINUED | | | | | | | | | | | | |
| | | | | | | | 5233a | 4 | 52'-0 | 116 | 6032'-0 | 1 | | | | | | | | | | | |
| | | | | | | | 5234a | 4 | 40'-0 | 232 | 9280'-0 | 1 | | | | | | | | | | | |
| | | | | | | | 5235a | 4 | 50'-0 | 58 | 2900'-0 | 1 | | | | | | | | | | | |
| | | | | | | | 5236a | 4 | 40'-0 | 58 | 2320'-0 | 1 | | | | | | | | | | | |
| | | | | | | | 5237a | 4 | 34'-3 | 58 | 1986'-6 | 1 | | | | | | | | | | | |

| FED. ROAD DIST. NO. | STATE | PROJ. AID PROJ. NO. | SHEET NO. | TOTAL SHEETS | SHEET NAME |
|---|---|---|---|---|---|
| U 7 | UTAH | | | | |

## BAR TYPES

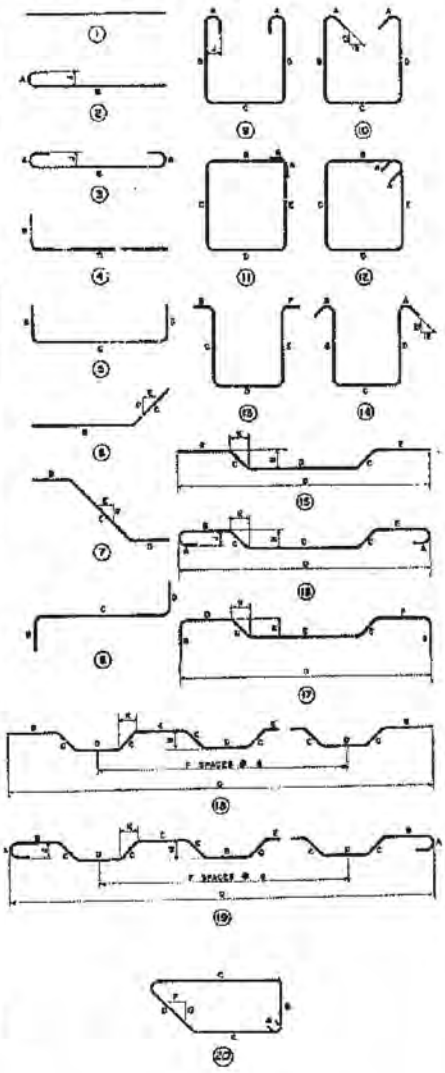

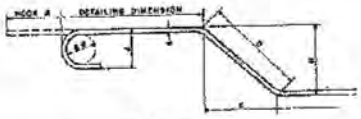


HOOK DETAIL

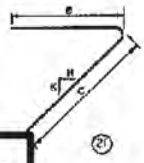

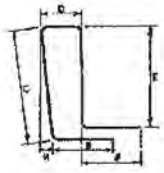

**FOR INFORMATION ONLY**

### GENERAL NOTES

1. All placing drawings, detailing, and fabrication shall be in accordance with the "Manual of Standard Practice for Detailing Reinforced Concrete Structures (ACI 315-57)".
2. All dimensions shown for bar bending details are out-to-out of bars.

REGISTERED PROFESSIONAL ENGINEER NO. 2380 H. LOCK LEONARD STATE OF UTAH

DESIGN AND DRAWING BY
WESTERN ENGINEERS, INC. AND
EDWARDS AND KELCEY
CONSULTING ENGINEERS

SUBMITTED BY [signature] CHIEF ENGINEER
UTAH ENGR. LIC. NO. 2380

SHEET 20 OF 24 SHEETS

UTAH STATE ROAD COMMISSION
SALT LAKE CITY, UTAH
BRIDGE DEPARTMENT

INTERSTATE OVER
UNION PACIFIC R. R.
380'-0⅞" O. TO O. 67° XING ∠
STA 37+94.70 IG-15-6(20) 277
LEHI-PROVO UTAH COUNTY

DESIGNED BY ____ SCALE ____
DRAWN BY RG ____ LOADING [signature] U. 1963
TRACED BY ____ APPROVED D. L. Sharp
CHECKED BY R.L. ____ CHIEF BRIDGE ENGINEER

NO. ____ DATE ____ NO. C-341

STRUCTURE I-C

# BILL OF REINFORCING

| MARK | SIZE | LGTH. | NO. REQ. | TOTAL LENGTH | TYPE | A | B | C | D | E | F | G | H | J | K | O |
|---|---|---|---|---|---|---|---|---|---|---|---|---|---|---|---|---|
| | | | | ABUT. #1 - NORTH WINGWALL CONT'D. | | | | | | | | | | | | |
| 1AW 5 | 5 | 9-6 | 6 | 57-0 | 1 | | | | | | | | | | | |
| 1AW 6 | | 9-0 | 51 | 459-0 | 1 | | | | | | | | | | | |
| 1AW 7 | | 5-0 | 2 | 10-0 | 1 | | | | | | | | | | | |
| 1AW 8 | | 4-0 | 2 | 8-0 | 1 | | | | | | | | | | | |
| 1AW 9 | | 3-0 | 2 | 6-0 | 1 | | | | | | | | | | | |
| 1AW 10 | | 2-3 | 2 | 4-6 | 1 | | | | | | | | | | | |
| 1AW 17 | | 10-4 | 6 | 62-0 | 1 | | | | | | | | | | | |
| 1AW 18 | | 4-0 | 6 | 24-0 | 6 | | 2-0 | 2-0 | 5½ | 12" | | | | | | |
| 1AW 21 | | 7-3 | 2 | 14-6 | 1 | | | | | | | | | | | |
| 1A 23 | 5 | 7-11 | 4 | 31-8 | 4 | | 2-0 | 6-0 | | | | | | | | |
| | | | | ABUT. #1 - SOUTH WINGWALL FOOTING | | | | | | | | | | | | |
| 1AF 44 | 9 | 7-1 | 29 | 205-5 | 4 | | 5-9 | 1-9 | | | | | | | | |
| 1AF 45 | 5 | 33-3 | 4 | 133-0 | 1 | | | | | | | | | | | |
| 1AF 46 | | 30-0 | 2 | 60-0 | | | | | | | | | | | | |
| 1AF 47 | | 26-9 | 2 | 53-6 | | | | | | | | | | | | |
| 1AF 48 | | 22-9 | 2 | 45-6 | | | | | | | | | | | | |
| 1AF 49 | | 19-3 | 2 | 38-6 | | | | | | | | | | | | |
| 1AF 50 | | 12-0 | 16 | 192-0 | | | | | | | | | | | | |
| 1AF 51 | | 11-4 | 2 | 22-8 | | | | | | | | | | | | |
| 1AF 52 | | 10-8 | 2 | 21-4 | | | | | | | | | | | | |
| 1AF 53 | | 10-0 | 2 | 20-0 | | | | | | | | | | | | |
| 1AF 54 | | 9-4 | 2 | 18-8 | | | | | | | | | | | | |
| 1AF 55 | | 8-8 | 2 | 17-4 | | | | | | | | | | | | |
| 1AF 56 | | 8-0 | 2 | 16-0 | | | | | | | | | | | | |
| 1AF 57 | | 7-4 | 2 | 14-8 | | | | | | | | | | | | |
| 1AF 58 | | 6-8 | 2 | 13-4 | | | | | | | | | | | | |
| 1AF 59 | | 6-0 | 2 | 12-0 | | | | | | | | | | | | |
| 1AF 60 | 5 | 3-0 | 20 | 60-0 | 1 | | | | | | | | | | | |
| | | | | ABUT. #1 - SOUTH WINGWALL | | | | | | | | | | | | |
| 1AW 11 | 6 | 15-4 | 15 | 230-0 | 1 | | | | | | | | | | | |
| 1AW 12 | 6 | 9-0 | 14 | 126-0 | 1 | | | | | | | | | | | |
| 1AW 13 | 5 | 24-8 | 14 | 345-4 | 1 | | | | | | | | | | | |
| 1AW 14 | 5 | 20-0 | 8 | 160-0 | 1 | | | | | | | | | | | |
| 1AW 15 | 5 | 15-4 | 15 | 230-0 | 1 | | | | | | | | | | | |
| 1AW 16 | 5 | 8-10 | 5 | 44-2 | 1 | | | | | | | | | | | |
| 1AW 19 | 5 | 5-2 | 10 | 51-8 | 23 | | 2-0 | 1-6 | 12" | 3" | | | 12" | | 3" | |
| 1AW 20 | 5 | 4-11 | 10 | 49-2 | 23 | | 1-11 | 1-6 | 12" | 3" | | | 12" | | 3" | |
| | | | | ABUT. #1 PEDESTALS | | | | | | | | | | | | |
| 1AP 1 | 5 | 10-4½ | 63 | 653-7½ | 13 | | 10¼ | 3-3 | 2-8 | 3-3 | 10¼ | | | | | |
| 1AP 2 | | 8-3 | 66 | 544-6 | 5 | | 3-0 | 2-6 | 3-0 | | | | | | | |
| 1AP 3 | | 6-3 | 20 | 125-0 | 5 | | 2-0 | 2-6 | 2-0 | | | | | | | |
| 1AP 4 | | 10-3 | 2 | 20-6 | 1 | | | | | | | | | | | |
| 1AP 5 | | 7-6 | 2 | 15-0 | 1 | | | | | | | | | | | |
| 1AP 6 | | 4-0 | 1 | 4-0 | 1 | | | | | | | | | | | |
| 1AP 7 | | 9-6 | 8 | 76-0 | 6 | | 4-0 | 5-6 | 5½ | 12" | | | | | | |
| 1AP 8 | | 7-6 | 7 | 52-6 | 6 | | 3-0 | 4-6 | 12" | 6" | | | | | | |
| 1AP 9 | 5 | 6-10 | 7 | 47-10 | 4 | | 2-10 | 4-0 | | | | | | | | |
| | | | | ABUTMENT NO. 4 | | | | | | | | | | | | |
| | | | | FOOTING | | | | | | | | | | | | |
| 4AF 1 | 6 | 6-7 | 82 | 539-10 | 4 | | 5-9 | 1-0 | | | | | | | | |
| 4AF 2 | 5 | 40-0 | 62 | 2480-0 | 1 | | | | | | | | | | | |
| 4AF 3 | | 17-0 | 6 | 102-0 | 1 | | | | | | | | | | | |
| 4AF 4 | | 6-0 | 12 | 72-0 | 1 | | | | | | | | | | | |
| 4AF 5 | | 22-0 | 12 | 264-0 | 1 | | | | | | | | | | | |
| 4AF 6 | | 9-0 | 12 | 108-0 | 1 | | | | | | | | | | | |
| 4AF 7 | | 34-0 | 10 | 340-0 | 1 | | | | | | | | | | | |
| 4AF 8 | | 6-8 | 347 | 2313-4 | 4 | | 5-9 | 1-0 | | | | | | | | |
| 4AF 9 | | 3-9 | 213 | 798-9 | 1 | | | | | | | | | | | |
| 4AF 10 | | 6-6 | 554 | 3633-6 | 1 | | | | | | | | | | | |
| 4AF 11 | | 5-3 | 18 | 94-6 | 1 | | | | | | | | | | | |
| 4AF 12 | | 4-11 | 72 | 354-0 | 1 | | | | | | | | | | | |
| 4AF 13 | 5 | 4-6 | 60 | 270-0 | 1 | | | | | | | | | | | |

| MARK | SIZE | LGTH. | NO. REQ. | TOTAL LENGTH | TYPE | A | B | C | D | E |
|---|---|---|---|---|---|---|---|---|---|---|
| | | | | ABUT. #4 FOOTING CONT. | | | | | | |
| 4AF 14 | 5 | 3-6 | 14 | 49-0 | 1 | | | | | |
| 4AF 23 | 5 | 7-6 | 103 | 772-6 | 1 | | | | | |
| 4AF 24 | 5 | 5-7 | 16 | 89-4 | 1 | | | | | |
| 4AF 25 | 5 | 3-0 | 4 | 12-0 | 1 | | | | | |
| | | | | ABUTMENT | | | | | | |
| 4A 1 | 6 | 4-0 | 244 | 976-0 | 4 | | 2-0 | 2-0 | | |
| 4A 2 | 5 | 28-8 | 64 | 1843-8 | 1 | | | | | |
| 4A 3 | | 16-0 | 16 | 256-0 | | | | | | |
| 4A 4 | | 27-8 | 56 | 1549-4 | | | | | | |
| 4A 5 | | 14-3 | 14 | 199-4 | | | | | | |
| 4A 6 | | 10-9 | 58 | 623-6 | | | | | | |
| 4A 7 | | 10-7 | 58 | 613-10 | | | | | | |
| 4A 8 | | 10-5 | 58 | 604-2 | | | | | | |
| 4A 9 | | 10-3 | 92 | 943-0 | | | | | | |
| 4A 10 | | 10-1 | 59 | 594-11 | | | | | | |
| 4A 11 | | 9-7 | 55 | 523-1 | | | | | | |
| 4A 12 | | 9-1 | 55 | 499-7 | | | | | | |
| 4A 13 | | 8-7 | 55 | 472-1 | | | | | | |
| 4A 14 | | 4-5 | 30 | 252-6 | 1 | | | | | |
| 4A 15 | 5 | 7-5 | 20 | 148-4 | 4 | | 5-9 | 1-9 | | |
| | | | | ABUT. #4 RETAINING WALL | | | | | | |
| 4AR 1 | 6 | 12-4 | 41 | 505-8 | 1 | | | | | |
| 4AR 2 | 6 | 12-0 | 41 | 492-0 | 1 | | | | | |
| 4AR 3 | 5 | 30-3 | 32 | 968-0 | 1 | | | | | |
| 4AR 4 | 5 | 12-4 | 20 | 246-8 | 1 | | | | | |
| 4AR 5 | 5 | 12-0 | 20 | 240-0 | 1 | | | | | |
| | | | | ABUT. #4 SOUTH WINGWALL | | | | | | |
| 4AF 15 | 6 | 6-7 | 41 | 431-7 | 4 | | 5-9 | 1-0 | | |
| 4AF 16 | 5 | 27-6 | 20 | 550-0 | 1 | | | | | |
| 4AF 17 | 5 | 6-6 | 110 | 715-0 | 1 | | | | | |
| 4AF 18 | 5 | 2-9 | 37 | 101-9 | 1 | | | | | |
| | | | | ABUT. #4 SOUTH WINGWA | | | | | | |
| 4AW 1 | 5 | 40-0 | 16 | 640-0 | 1 | | | | | |
| 4AW 2 | | 20-7 | 4 | 82-4 | | | | | | |
| 4AW 3 | | 18-5 | 2 | 36-10 | | | | | | |
| 4AW 4 | | 16-3 | 2 | 32-6 | | | | | | |
| 4AW 5 | | 14-4 | 8 | 114-8 | | | | | | |
| 4AW 6 | | 11-10 | 98 | 1159-8 | | | | | | |
| 4AW 7 | | 5-0 | 2 | 10-0 | | | | | | |
| 4AW 8 | | 4-0 | 2 | 8-0 | | | | | | |
| 4AW 9 | | 3-0 | 2 | 6-0 | | | | | | |
| 4AW 10 | | 2-0 | 2 | 4-0 | | | | | | |
| 4AW 11 | | 10-4 | 7 | 72-4 | 1 | | | | | |
| 4AW 12 | | 4-0 | 7 | 28-0 | 6 | | 2-0 | 2-0 | 5½ | 12" |
| 4AW 13 | | 5-2 | 6 | 31-0 | 23 | | 2-2 | 1-6 | 12" | 3" |
| 4AW 14 | 5 | 4-11 | 6 | 29-6 | 23 | | 1-11 | 1-6 | 12" | 3" |
| | | | | ABUT. #4 NORTH WING WA | | | | | | |
| 4AF 15 | 6 | 6-7 | 11 | 72-5 | 4 | | 5-9 | 1-0 | | |
| 4AF 18 | 5 | 2-9 | 9 | 24-9 | 1 | | | | | |
| 4AF 19 | 5 | 21-2 | 4 | 84-8 | 1 | | | | | |
| 4AF 20 | 5 | 22-0 | 2 | 44-0 | 1 | | | | | |
| 4AF 21 | 5 | 18-6 | 2 | 37-0 | 1 | | | | | |
| 4AF 22 | 5 | 6-6 | 27 | 175-6 | 1 | | | | | |
| | | | | ABUT. #4 NORTH WINGWALL | | | | | | |
| 4AW 15 | 6 | 12-8 | 6 | 76-0 | 1 | | | | | |
| 4AW 16 | 5 | 8-0 | 8 | 64-0 | 1 | | | | | |
| 4AW 17 | 5 | 10-0 | 17 | 170-0 | 1 | | | | | |

PENNSYLVANIA DOT

DGN File: 18_PWPhase1167\4433_C-341-21_FoundFooting

BC-MAY-2005

## STEEL

| F | G | H | J | K | O | MARK | SIZE | LGTH. | NO. REQ. | TOTAL LENGTH | TYPE | A | B | C | D | E | F | G | H | J | K | O |
|---|---|---|---|---|---|---|---|---|---|---|---|---|---|---|---|---|---|---|---|---|---|---|
| | | | | | | | | | | ABUT #4 PEDESTALS | | | | | | | | | | | | |
| | | | | | | 4AP 1 | 5 | 10-4½ | 59 | 612-1½ | 13 | | 10¼ | 3-3 | 2-8 | 3-3 | 10¼ | | | | | |
| | | | | | | 4AP 2 | | 8-3 | 66 | 544-6 | 5 | | 3-0 | 2-6 | 3-0 | | | | | | | |
| | | | | | | 4AP 3 | | 6-3 | 20 | 125-0 | 5 | | 2-0 | 2-6 | 2-0 | | | | | | | |
| | | | | | | 4AP 4 | | 10-3 | 2 | 20-6 | 1 | | | | | | | | | | | |
| | | | | | | 4AP 5 | | 7-6 | 2 | 15-0 | 1 | | | | | | | | | | | |
| | | | | | | 4AP 6 | | 4-0 | 1 | 4-0 | 1 | | | | | | | | | | | |
| | | | | | | 4AP 7 | | 9-6 | 8 | 76-0 | 6 | | 4-0 | 5-6 | 5½ | 12" | | | | | | |
| | | | | | | 4AP 8 | | 7-6 | 3 | 22-6 | 6 | | 3-0 | 4-6 | 12" | 6" | | | | | | |
| | | | | | | 4AP 9 | 5 | 6-10 | 3 | 20-6 | 4 | | 2-10 | 4-0 | | | | | | | | |

D.

FOOTING

LL

12" 3"

12" 3"

FOOTING

| STD. ROAD DIST. NO. | STATE | FED. AID PROJ. NO. | FISCAL YEAR | SHEET NO. | TOTAL SHEETS |
|---|---|---|---|---|---|
| U. T. | UTAH | | | | |

## BAR TYPES

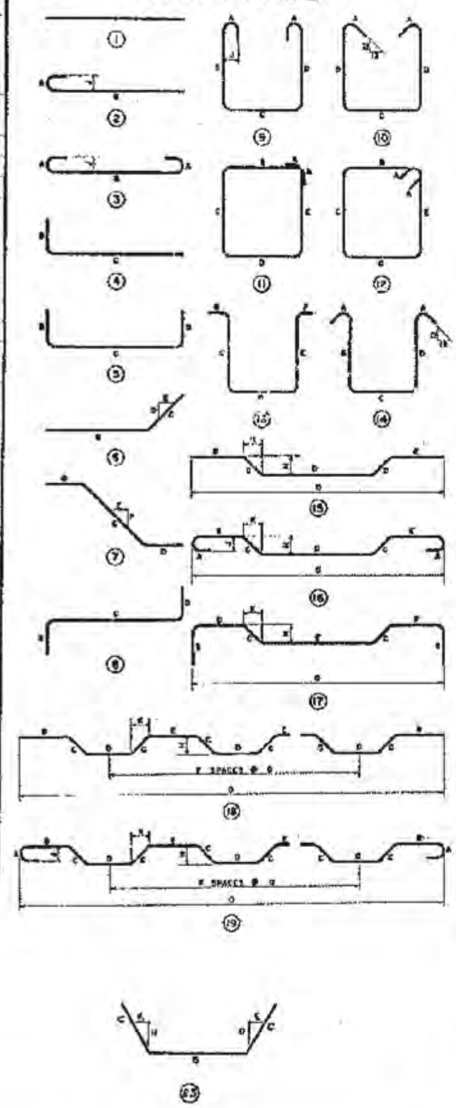

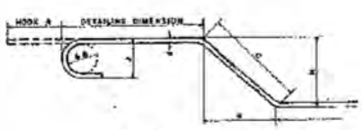

HOOK DETAIL

**FOR INFORMATION ONLY**

### GENERAL NOTES

1. All placing drawings, detailing, and fabrication shall be in accordance with the "Manual of Standard Practice for Detailing Reinforced Concrete Structures (ACI 315-57)".
2. All dimensions shown for bar bending details are out-to-out of bars.

REGISTERED PROFESSIONAL ENGINEER NO. 2388 H. JACK LOMBARD STATE OF UTAH

DESIGN AND DRAWING BY
WESTERN ENGINEERS, INC. AND
EDWARDS AND KELCEY
CONSULTING ENGINEERS

SUBMITTED BY: H. Jack Lombard, CHIEF ENGINEER
UTAH ENGR. LIC. NO. 2388

SHEET 21 OF 24 SHEETS

UTAH STATE ROAD COMMISSION
SALT LAKE CITY, UTAH
BRIDGE DEPARTMENT

INTERSTATE OVER
UNION PACIFIC R. R.
390'-0⅞" O. TO O. 67° XING ∠
STA. 57+94.70 IG-15-6(20)277
LEHI - PROVO UTAH COUNTY

3 Co Contr.

DESIGNED BY: ____ SCALE: ____
DRAWN BY: CG ISSUED: June 11, 1963
TRACED BY: ____ APPROVED: ____ CHIEF BRIDGE ENGINEER
CHECKED BY: RL

BR. NO. ____ DWG. NO. C-341

STRUCTURE I-C

# BILL OF REINFORCING

| MARK | SIZE | LGTH. | NO. REQ. | TOTAL LENGTH | TYPE | A | B | C | D | E | F | G | H | J | K | O |
|---|---|---|---|---|---|---|---|---|---|---|---|---|---|---|---|---|
| | | | | PIER NO. 2N | | | | | | | | | | | | |
| | | | | FOOTING | | | | | | | | | | | | |
| 2NPF 1 | 11 | 42-0 | 12 | 504-0 | 1 | | | | | | | | | | | |
| 2NPF 2 | 11 | 35-3 | 24 | 840-0 | 1 | | | | | | | | | | | |
| 2NPF 3 | 11 | 22-8 | 12 | 272-0 | 1 | | | | | | | | | | | |
| 2NPF 4 | 10 | 8-6 | 70 | 595-0 | 1 | | | | | | | | | | | |
| 2NPF 5 | 9 | 41-3 | 20 | 825-0 | 1 | | | | | | | | | | | |
| 2NPF 6 | 9 | 25-4 | 20 | 508-8 | 1 | | | | | | | | | | | |
| 2NPF 7 | 11 | 6-4 | 140 | 896-8 | 4 | | 2-6 | 1-10 | | | | | | | | |
| 2NPF 8 | 6 | 39-10 | 4 | 159-8 | 1 | | | | | | | | | | | |
| 2NPF 9 | 6 | 34-4 | 8 | 274-8 | 1 | | | | | | | | | | | |
| 2NPF 10 | 6 | 20-10 | 4 | 83-4 | 1 | | | | | | | | | | | |
| 2NPF 11 | 5 | 8-6 | 140 | 1190-0 | 1 | | | | | | | | | | | |
| 2NPF 12 | 11 | 11-10 | 16 | 188-4 | 4 | | 12-0 | 1-10 | | | | | | | | |
| | | | | COLUMNS | | | | | | | | | | | | |
| 2NPC 1 | 11 | 28-8 | 20 | 573-4 | 1 | | | | | | | | | | | |
| 2NPC 2 | 11 | 28-4 | 20 | 565-4 | 1 | | | | | | | | | | | |
| 2NPC 3 | 11 | 27-8 | 20 | 553-4 | 1 | | | | | | | | | | | |
| 2NPC 4 | 11 | 27-2 | 20 | 543-4 | 1 | | | | | | | | | | | |
| 2NPC 5 | 11 | 26-7 | 20 | 531-8 | 1 | | | | | | | | | | | |
| 2NPC 6 | 11 | 26-1 | 20 | 521-8 | 1 | | | | | | | | | | | |
| 2NPC 7 | 11 | 25-7 | 20 | 511-8 | 1 | | | | | | | | | | | |
| 2NPC 8 | 4 | 10-4 | 126 | 1303-0 | 11 | 0-10 | 2-2 | 2-2 | 2-2 | 2-2 | | | | | | |
| 2NPC 9 | 4 | 7-2 | 126 | 903-0 | 12 | 0-5 | 1-7 | 1-7 | 1-7 | 1-7 | | | | | | |
| 2NPC 10 | 4 | 8-6 | 204 | 1734-0 | 12 | 0-5 | 1-8 | 2-2 | 1-8 | 2-2 | | | | | | |
| 2NPC 11 | 11 | 23-4 | 8 | 186-8 | 1 | | | | | | | | | | | |
| 2NPC 12 | 11 | 20-2 | 8 | 162-0 | 1 | | | | | | | | | | | |
| | | | | CAP | | | | | | | | | | | | |
| 2NP 1 | 9 | 40-6 | 16 | 607-6 | 1 | | | | | | | | | | | |
| 2NP 2 | 9 | 41-6 | 16 | 622-6 | 1 | | | | | | | | | | | |
| 2NP 3 | 9 | 6-0 | 4 | 27-0 | 1 | | | | | | | | | | | |
| 2NP 4 | 9 | 8-1 | 6 | 48-6 | 4 | | 6-9 | 1-4 | | | | | | | | |
| 2NP 5 | 9 | 5-10 | 6 | 35-0 | 6 | | 2-0 | 3-9 | 4-10 | 3-4 | 12 | | | | | |
| 2NP 6 | 5 | 42-3 | 6 | 256-6 | 1 | | | | | | | | | | | |
| 2NP 7 | 5 | 2-5 | 28 | 67-8 | | | | | | | | | | | | |
| 2NP 8 | 4 | 11-0 | 50 | 550-0 | 12 | 0-5 | 2-5 | 2-8 | 2-5 | 2-8 | | | | | | |
| 2NP 9 | 4 | 9-8 | 2 | 19-4 | 12 | 0-5 | 2-5 | 6-0 | 2-5 | 2-0 | | | | | | |
| | | | | PIER NO. 2S | | | | | | | | | | | | |
| | | | | FOOTING | | | | | | | | | | | | |
| | | | | SAME AS 2N FOOTING | | | | | | | | | | | | |
| | | | | COLUMNS | | | | | | | | | | | | |
| 2SPC 1 | 11 | 30-7 | 40 | 1223-4 | 1 | | | | | | | | | | | |
| 2SPC 2 | 11 | 30-5 | 40 | 1216-8 | 1 | | | | | | | | | | | |
| 2SPC 3 | 11 | 30-3 | 60 | 1815-0 | 1 | | | | | | | | | | | |
| 2SPC 8 | 4 | 10-4 | 140 | 1446-8 | 11 | 0-10 | 2-2 | 2-2 | 2-2 | 2-2 | | | | | | |
| 2SPC 9 | 4 | 7-2 | 140 | 1003-4 | 12 | 0-5 | 1-7 | 1-7 | 1-7 | 1-7 | | | | | | |
| 2SPC 10 | 4 | 8-6 | 228 | 1938-0 | 12 | 0-5 | 1-8 | 2-2 | 1-8 | 2-2 | | | | | | |
| 2SPC 11 | 11 | 26-3 | 8 | 202-0 | 1 | | | | | | | | | | | |
| 2SPC 12 | 11 | 24-10 | 8 | 198-8 | 1 | | | | | | | | | | | |
| | | | | CAP | | | | | | | | | | | | |
| | | | | SAME AS 2N CAP | | | | | | | | | | | | |
| | | | | PIER NO. 3N | | | | | | | | | | | | |
| | | | | FOOTING | | | | | | | | | | | | |
| | | | | SAME AS 2N FOOTING | | | | | | | | | | | | |

| MARK | SIZE | LGTH. | NO. REQ. | TOTAL LENGTH | TYPE | A | B | C | D | E |
|---|---|---|---|---|---|---|---|---|---|---|
| | | | | PIER NO. 3N COLUMNS | | | | | | |
| 3NPC 1 | 11 | 31-3 | 20 | 625-0 | 1 | | | | | |
| 3NPC 2 | 11 | 30-10 | 20 | 616-8 | 1 | | | | | |
| 3NPC 3 | 11 | 30-5 | 20 | 608-4 | 1 | | | | | |
| 3NPC 4 | 11 | 30-0 | 20 | 600-0 | 1 | | | | | |
| 3NPC 5 | 11 | 29-7 | 20 | 591-8 | 1 | | | | | |
| 3NPC 6 | 11 | 29-2 | 20 | 583-4 | 1 | | | | | |
| 3NPC 7 | 11 | 28-12 | 20 | 576-8 | 1 | | | | | |
| 3NPC 8 | 4 | 10-4 | 154 | 1446-8 | 11 | 0-10 | 2-2 | 2-2 | 2-2 | 2-2 |
| 3NPC 9 | 4 | 7-2 | 140 | 1003-4 | 12 | 0-5 | 1-7 | 1-7 | 1-7 | 1-7 |
| 3NPC 10 | 4 | 8-6 | 224 | 1904-0 | 12 | 0-5 | 1-8 | 2-2 | 1-8 | 2-2 |
| 3NPC 11 | 11 | 25-11 | 8 | 207-4 | 1 | | | | | |
| 3NPC 12 | 11 | 23-6 | 8 | 188-0 | 1 | | | | | |
| | | | | CAP | | | | | | |
| | | | | SAME AS 2N CAP | | | | | | |
| | | | | PIER NO. 3S | | | | | | |
| | | | | FOOTING | | | | | | |
| | | | | SAME AS 2N FOOTING | | | | | | |
| | | | | COLUMNS | | | | | | |
| 3SPC 1 | 11 | 32-0 | 140 | 4480-0 | 1 | | | | | |
| 3SPC 8 | 4 | 10-4 | 150 | 1550-0 | 12 | 0-10 | 2-2 | 2-2 | 2-2 | 2-2 |
| 3SPC 9 | 4 | 7-2 | 150 | 1075-0 | 12 | 0-5 | 1-7 | 1-7 | 1-7 | 1-7 |
| 3SPC 10 | 4 | 8-6 | 240 | 2040-0 | 12 | 0-5 | 1-8 | 2-2 | 1-8 | 2-2 |
| 3SPC 11 | 11 | 26-8 | 16 | 426-8 | 1 | | | | | |
| | | | | CAP | | | | | | |
| | | | | SAME AS 2N CAP | | | | | | |

PENNSYLVANIA CO

DEN. File: JP PaPrints1872X4433.F-341-22 Foundation

JUL-MAY-2005

## G STEEL

| F | G | H | J | K | O | MARK | SIZE | LGTH. | NO. REQ. | TOTAL LENGTH | TYPE | A | B | C | D | E | F | G | H | J | K | O |
|---|---|---|---|---|---|---|---|---|---|---|---|---|---|---|---|---|---|---|---|---|---|---|

| SEC. ROAD DIST. NO. | STATE | NO. AND PROJ. NO. | PROGRAM YEAR | SHEET NO. | TOTAL SHEETS |
|---|---|---|---|---|---|
| U.T. | UTAH | | | | |

### BAR TYPES

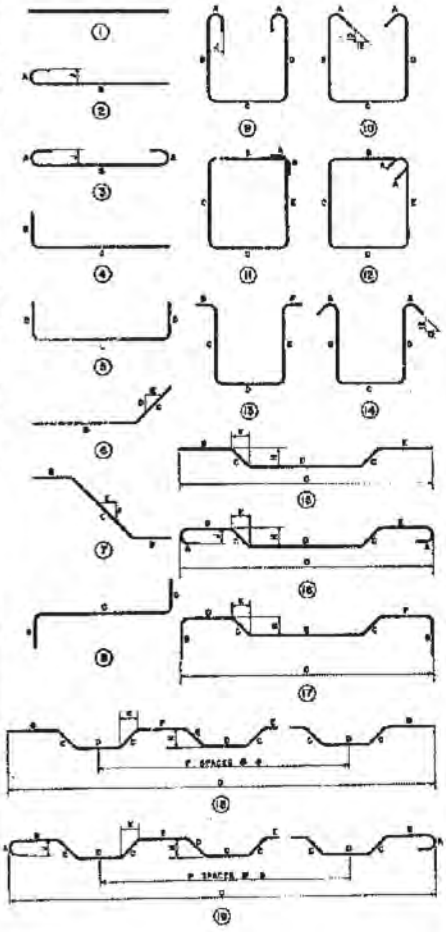


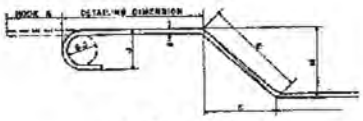


HOOK DETAIL

**FOR INFORMATION ONLY**

### GENERAL NOTES

1. All placing drawings, detailing, and fabrication shall be in accordance with the "Manual of Standard Practice for Detailing Reinforced Concrete Structures (ACI 315-57)".
2. All dimensions shown for bar bending details are out-to-out of bars.

REGISTERED PROFESSIONAL ENGINEER NO. 2366 R. JOHN OLD STATE OF UTAH

DESIGN AND DRAWING BY
WESTERN ENGINEERS, INC. AND
EDWARDS AND KELCEY
CONSULTING ENGINEERS

SUBMITTED BY: W. Jack Lemon, CHIEF ENGINEER
STATE ENGR. LIC. NO. 3-358

SHEET 22 OF 24 SHEETS

UTAH STATE ROAD COMMISSION
SALT LAKE CITY, UTAH
BRIDGE DEPARTMENT

INTERSTATE OVER
UNION PACIFIC R. R.
390'-0 7/8" O. TO O. 67° XING ∠
STA. 57+94.70 16 - 15 - 6(20) 277
LEHI - PROVO UTAH COUNTY

3rd Contr.

DESIGNED BY: ____ SCALE: ____
DRAWN BY: RO ISSUED: January 15, 1962
TRACED BY: ____ APPROVED: D. L. Spangler
CHECKED BY: RL CHIEF BRIDGE ENGINEER

NO. ____ ORIG. NO. C-341

STRUCTURE I-C

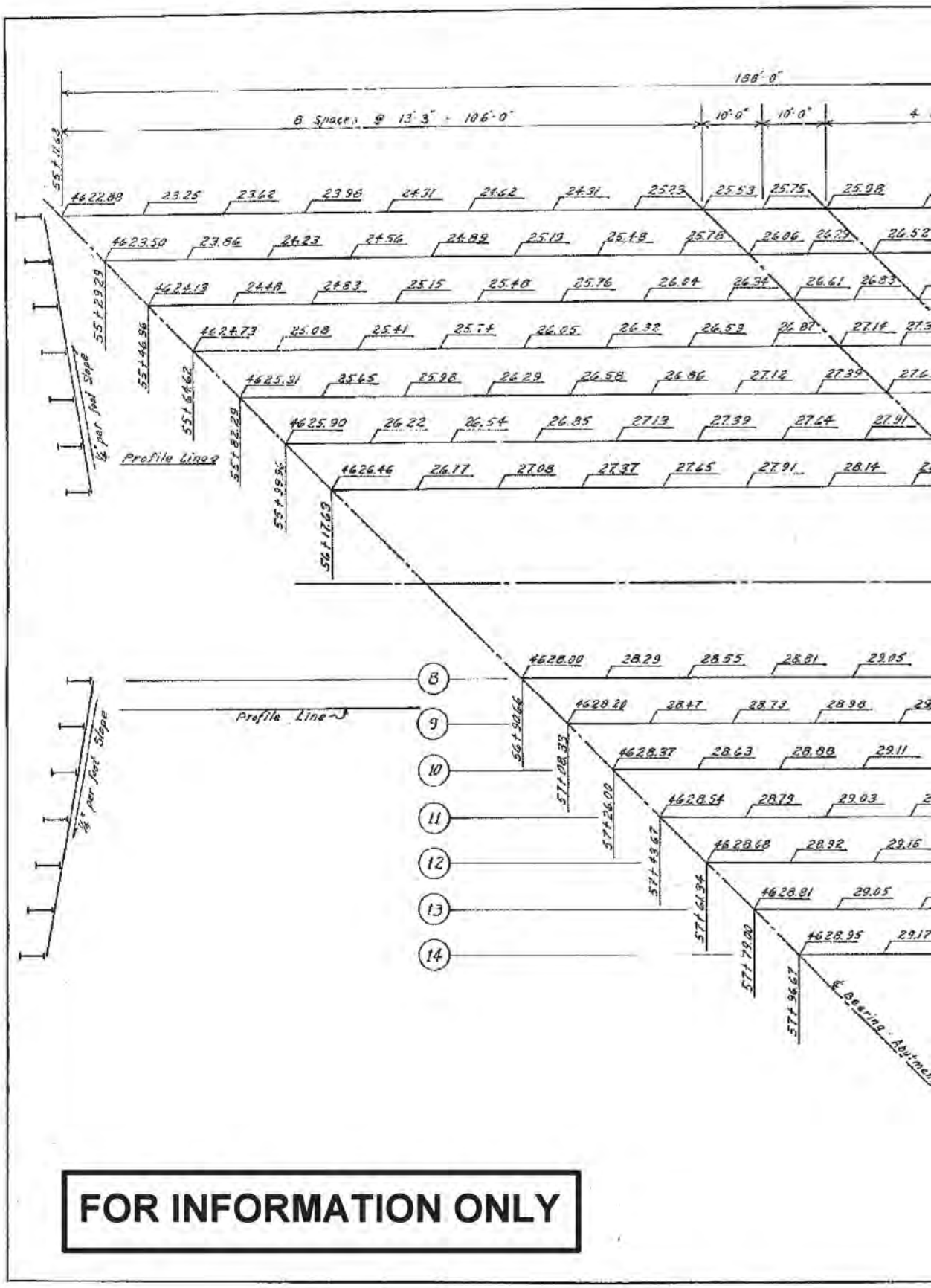


**FOR INFORMATION ONLY**

[redacted]

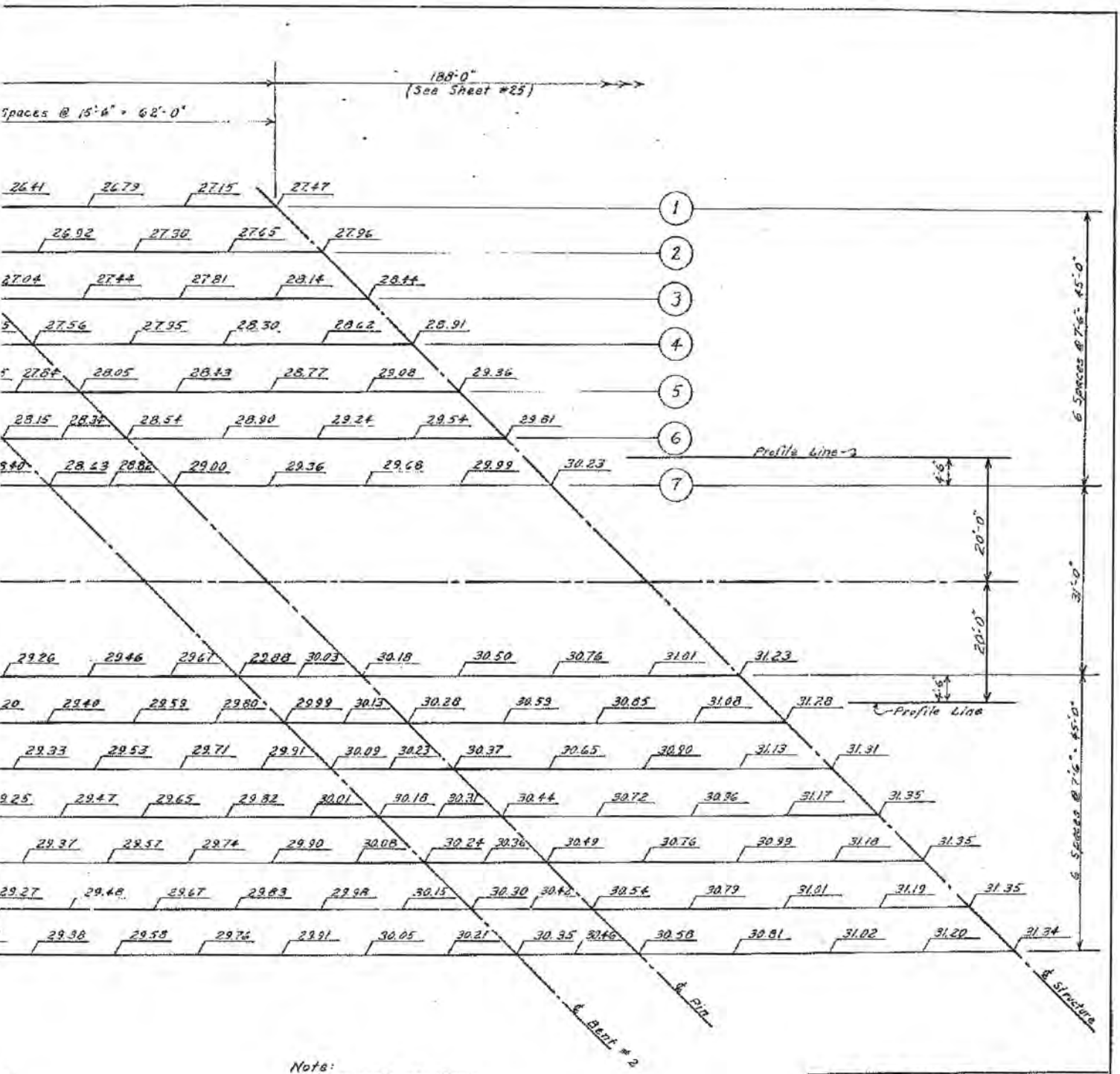


Note:
Skew angle as drawn is not true skew angle.
Elevations shown are finish grade plus 1.25 x slab D.L. deflection only.

| NO. | BY | DATE | REMARKS |
|---|---|---|---|
| | | | REVISIONS |

UTAH STATE DEPARTMENT OF HIGHWAYS
SALT LAKE CITY, UTAH
STRUCTURES DIVISION

LEHI - PROVO
INTERSTATE OVER UPRR
SCREED ELEVATIONS

| | | |
|---|---|---|
| DESIGNED BY | ORIGINAL BY H.C.W. | IG-15-6(20)277 3rd Contr. |
| DRAWN BY JEW | CHECKED BY | PROJECT NUMBER |
| QUANTITIES BY JEW | CHECKED BY | 57+94.70 |
| APPROVAL RECOMMENDED BY | GROUP LEADER | STATION |
| APPROVED Gov. 11, 1962 | D.L. Sargent CHIEF ENGINEER | UTAH COUNTY |
| SHEET NO. | DOC. NO. C-341 | 23 OF 24 |

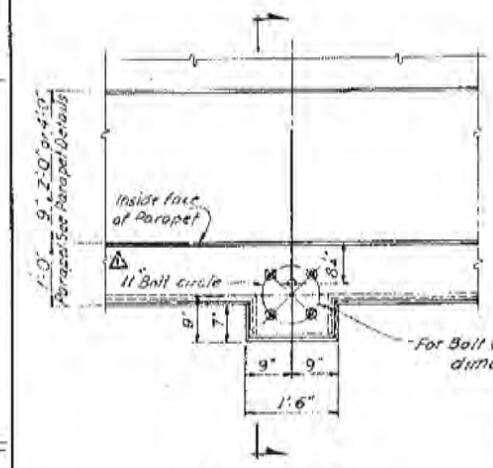


| BOLT CIRCLE DIA. | ANCHOR BOLT SIZE |
|---|---|
| 11" | 1"ø |

PLAN
(BRACKET "A")

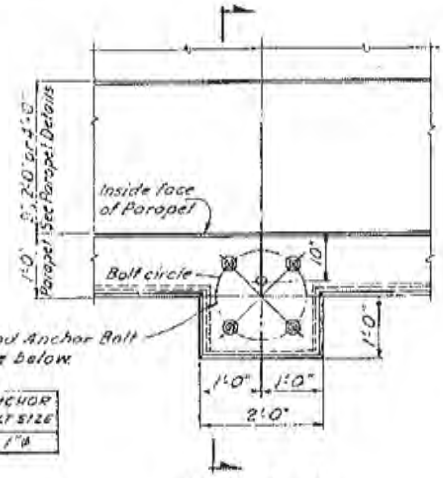


PLAN
(BRACKET "B")

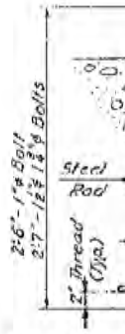


ANCHOR

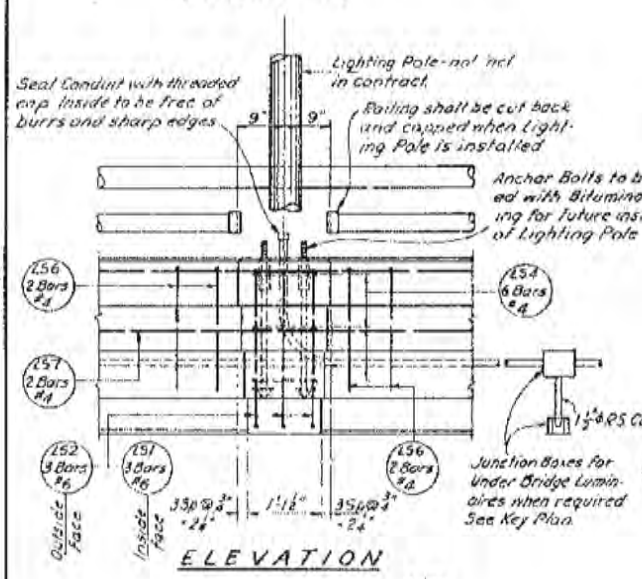


ELEVATION

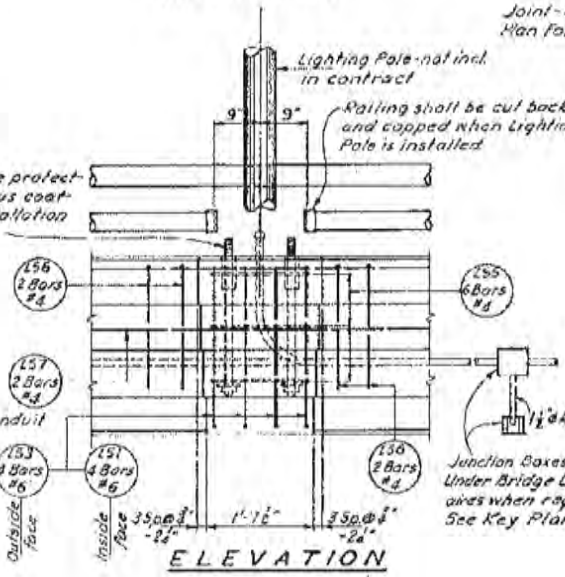


ELEVATION

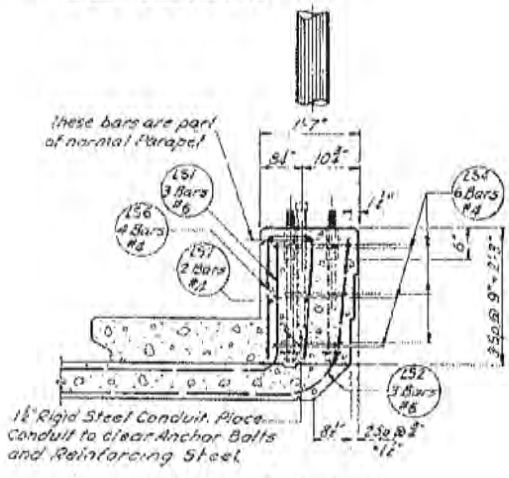


SECTION A-A

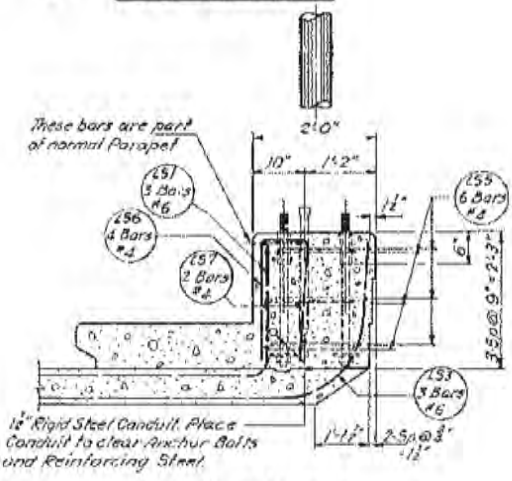


SECTION B-B

FOR I

BOLT DETAIL

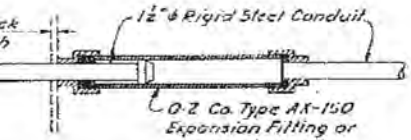


EXPANSION FITTING DETAIL

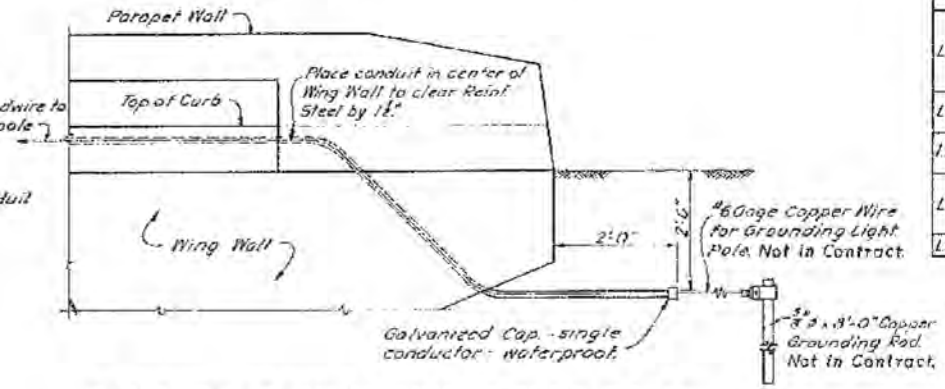


CONDUIT TERMINATION AT WING WALLS

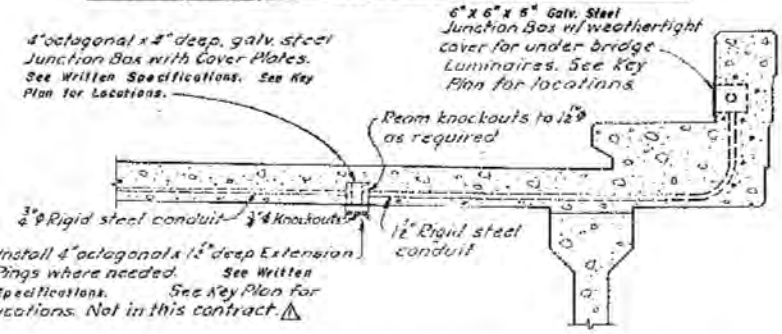


DETAILS FOR FUTURE SUSPENDED UNDERPASS LUMINAIRES

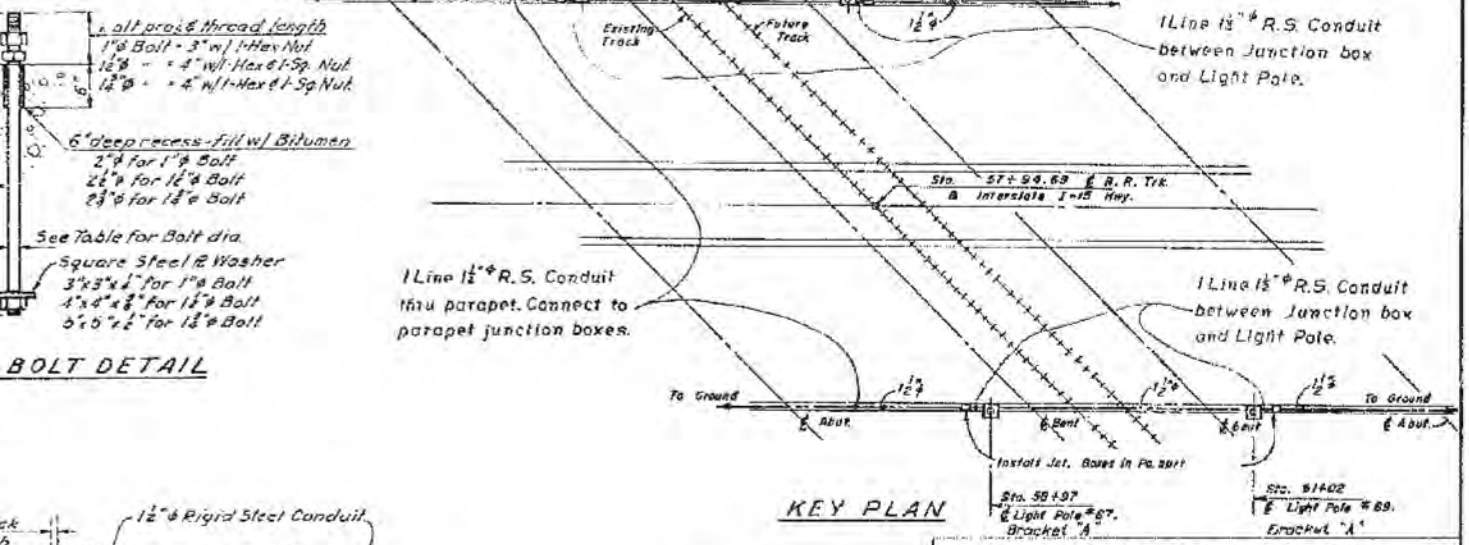


KEY PLAN

Note

Light Pole stationing, if shown, is approximate. Pole Mounting Bracket shall be located midway between railing posts nearest the station indicated.

STEEL SCHEDULE - POLE SUPPORT

| MARK | SIZE | LENGTH | AMT. | SKETCH |
|---|---|---|---|---|
| LS1 | 6 | 5'-2" | 12 | 2'-10" 1'-10" 4"R |
| LS2 | 6 | 6'-1" | 12 | 3'-4" 11"R 2½" |
| LS3 | 6 | 6'-4" | - | 3'-4" 1'-5"R 2½" |
| LS4 | 4 | 3'-3" | 24 | LS4 - 1'-1" LS5 - 1'-6" LS4 1'-0" LS5 1'-7" |
| LS5 | 4 | 4'-8" | - | |
| LS6 | 4 | 4'-11" | 16 | 2'-1" 12" 9" |
| LS7 | 4 | | 8 | |

GENERAL NOTES

1-Rigid Steel Conduit, threaded and galvanized, shall conform to Federal Specifications WW-C-581c.

2-Conduit Expansion Fittings shall be installed where ever conduit crosses structure expansion joints.

3-Conduit shall terminate at junction boxes with double lock nuts and insulated grounding type bushings. Bushings shall be O-Z Co. Type BL or approved equal. All conduit shall be bonded in boxes with bare #6 AWG Copper wire.

4-All work shall conform to the latest Edition of the National Electrical Code.

5-See Special Provisions for Electrical Work - Bridges.

UTAH STATE DEPARTMENT OF HIGHWAYS
SALT LAKE CITY, UTAH
STRUCTURES DIVISION
LEHI TO PROVO
INTERSTATE OVER U.P.R.R.
ELECTRICAL WORK BRIDGES

| | | |
|---|---|---|
| DESIGNED BY | CHECKED BY | IG-15-6(20)277 3rd Conb. PROJECT NUMBER |
| DRAWN BY J.H.G. | CHECKED BY | |
| QUANTITIES BY | CHECKED BY | 57+94.70 STATION |
| APPROVAL RECOMMENDED BY GROUP LEADER | | UTAH COUNTY |
| APPROVED DATE CHIEF STRUCTURAL ENG'R | | |
| SHT. NO. 1-C | DRG. NO. C-341 | 24 of 24 |

REVISIONS
NO. 1 ⚠ 8-30-73 11"S.C. added to Bracket "A"

**INFORMATION ONLY**

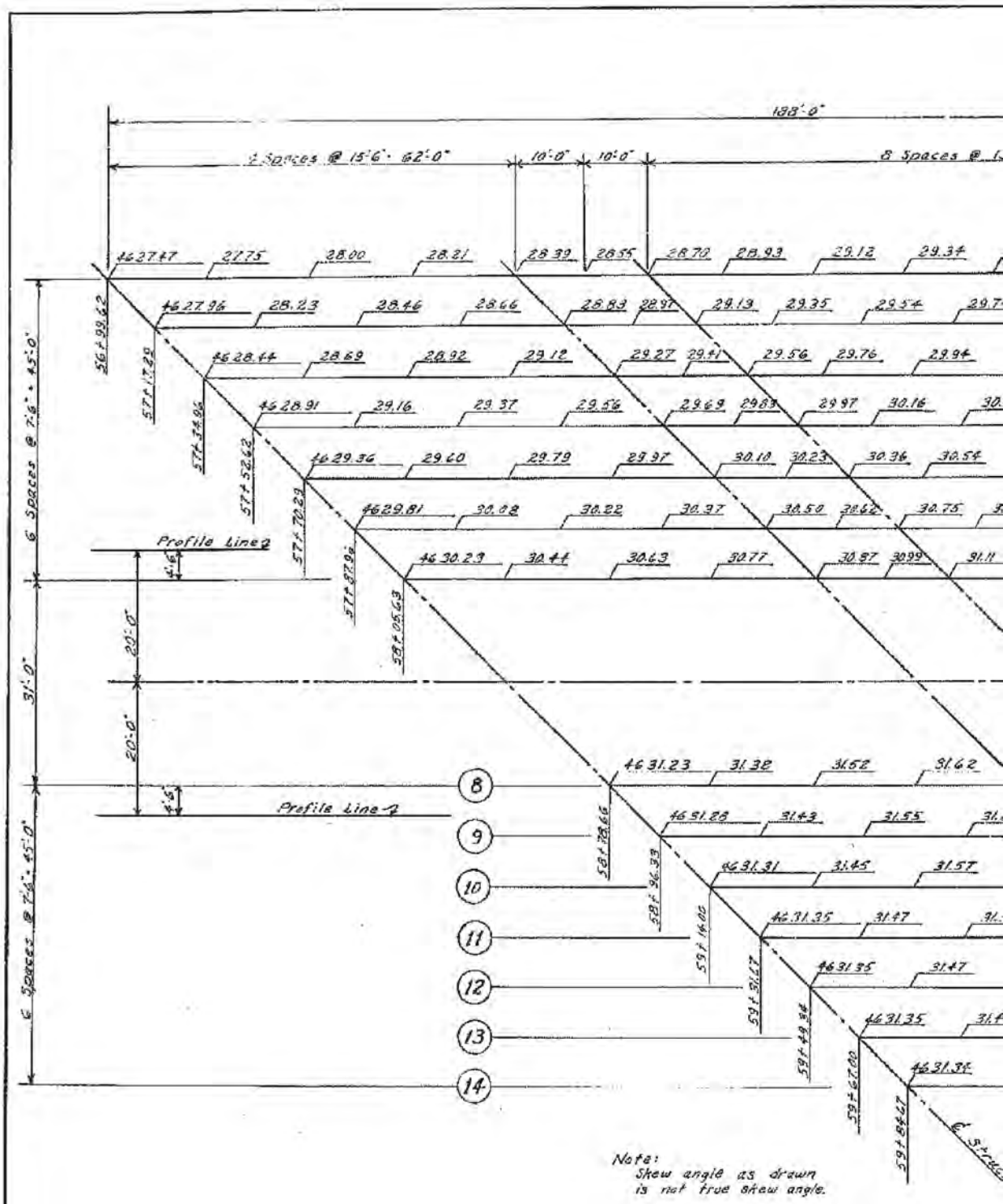


**FOR INFORMATION ONLY**

[redacted]

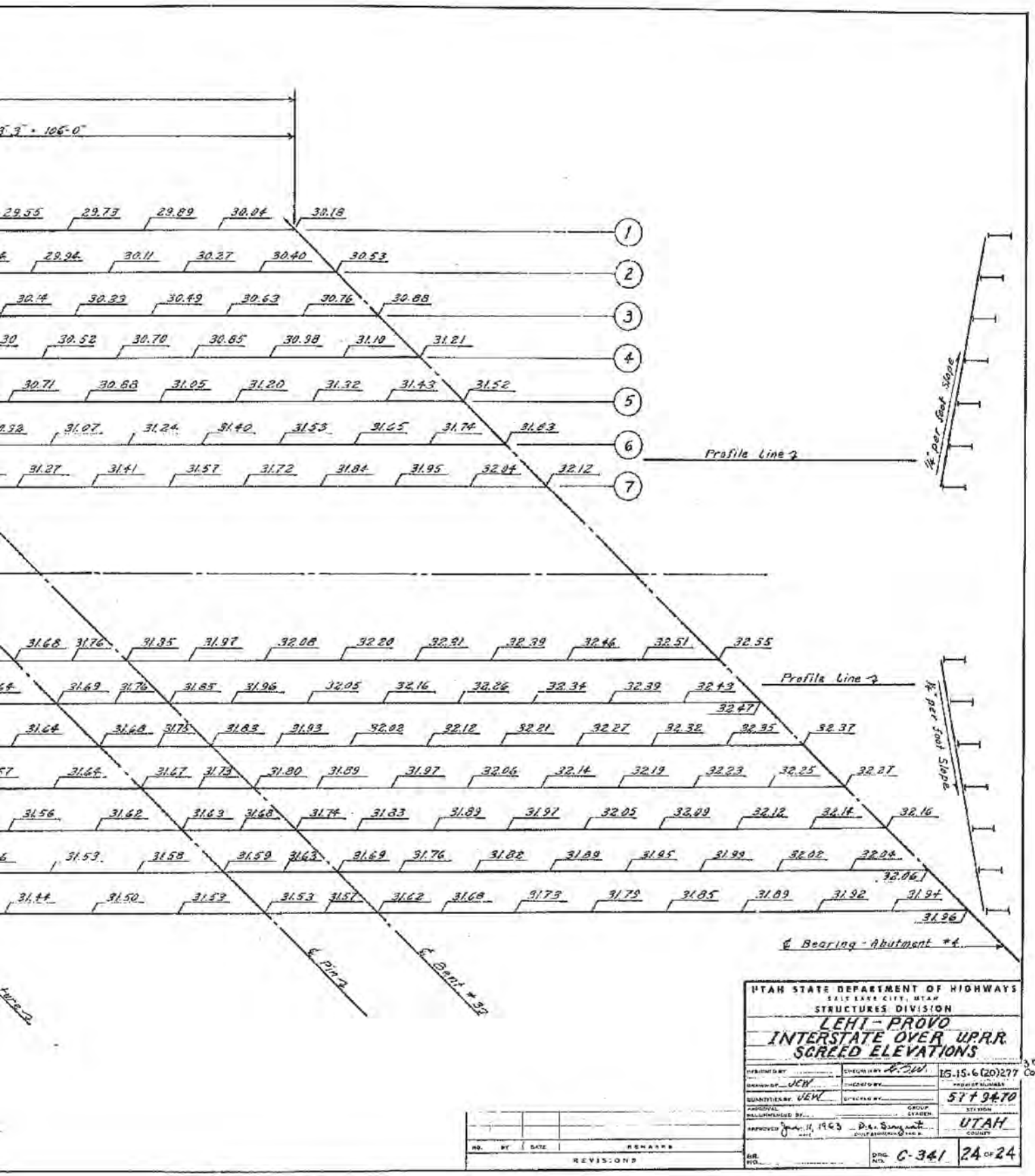


UTAH STATE DEPARTMENT OF HIGHWAYS
SALT LAKE CITY, UTAH
STRUCTURES DIVISION

LEHI - PROVO
INTERSTATE OVER U.P.R.R.
SCREED ELEVATIONS

| | | |
|---|---|---|
| DESIGNED BY | CHECKED BY | IG-15-6(20)277 |
| DRAWN BY JEW | CHECKED BY | PROJECT NUMBER |
| QUANTITIES BY JEW | CHECKED BY | 5 T 9470 |
| APPROVAL RECOMMENDED BY | GROUP LEADER | STATION |
| APPROVED June 11, 1963 | D. A. Sargent | UTAH |
| DATE | CHIEF ENGINEER | COUNTY |
| | | DWG. NO. C-341 |

24 OF 24

| NO. | BY | DATE | REMARKS |
|---|---|---|---|
| | | | |

REVISIONS

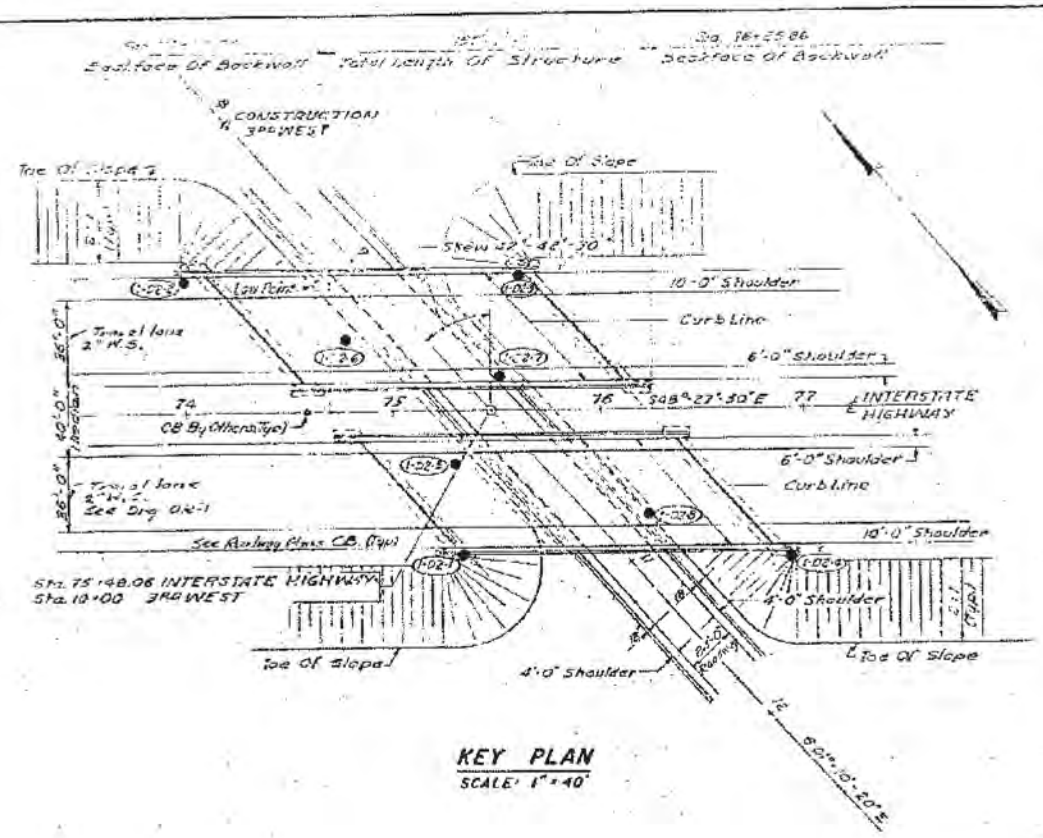


## KEY PLAN

SCALE: 1" = 40'

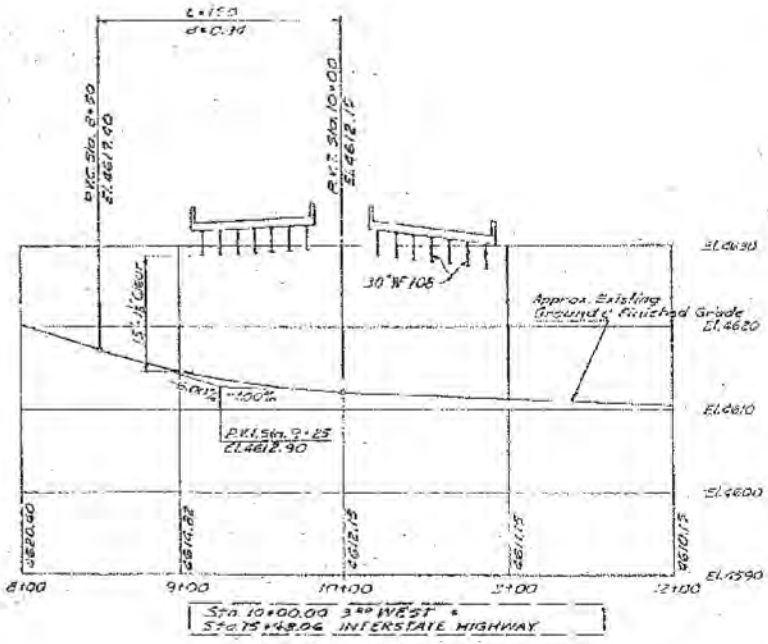


## 3RD. WEST PROFILE

SCALE: 1" = 10' VERT.
1" = 50' HOR.

## GENERAL N

DESIGN SPECIFICATION:
AASHTO Standard Specificatio

CONSTRUCTION SPECIFICATION
Materials, Construction And Wo
Specifications For Road And Bri
Which Are In Effect At Date Of B

LIVE LOAD:
HS20-S16-44 Interstate Altera
OF 1961

ALLOWABLE STRESSES:
Structural Steel
Reinforcing Steel
fc - Cast-In-Place Concrete in
fc - Ultimate Compressive Str

STRUCTURAL STEEL:
Unless Otherwise Noted St

CONCRETE:
Class AA Concrete With Type

REINFORCEMENT:
All Reinforcing Steel Bar
To AASHTO. Designation M31 And S

CHAMFERS:
Exposed Concrete Of Substru
Noted. Edges Of Concrete Deck
Noted. Exposed corners. at appro

FOUNDATIONS:
Foundations May Be Altered

DATUM:
All Elevations Refer To U.S.G

BENCH MARK:

SHOP DRAWINGS:
All Shop Drawings Shall Be

DGN Files IP_PWpdns\16721\4433_C-042-01_Foundation
02-MAY-2005

**FOR INFORMATION ONLY**

| FED. ROAD DIV. NO. | STATE | FED. AID PROJ. NO. | FISCAL YEAR | SHEET NO. | TOTAL SHEETS |
|---|---|---|---|---|---|
| 07 | UTAH | | | | |

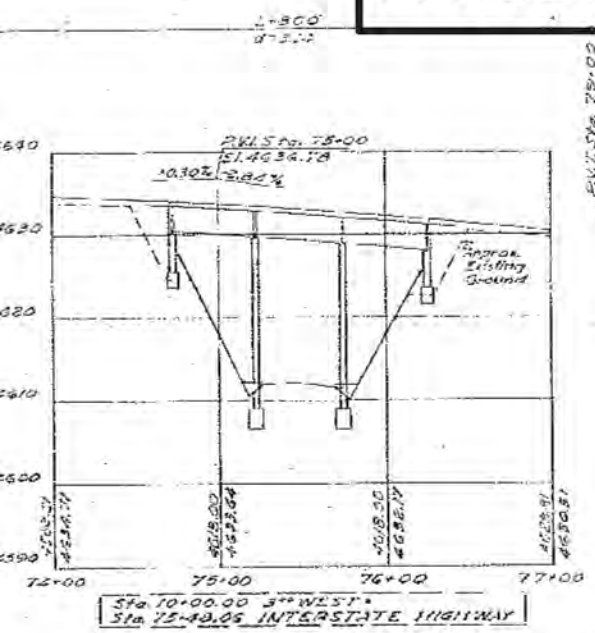


**INTERSTATE HIGHWAY PROFILE**

SCALE: 1" = 10' VERT
1" = 50' HOR.

## ESTIMATE OF QUANTITIES
2 Structures

| NO. | ITEM | QUANTITIES | As Const |
|---|---|---|---|
| | EXCAVATION FOR STRUCTURES (UNCLASSIFIED) | 680 Cu Yd. | 1090 |
| | CLASS A CONCRETE (AE) | 1,500 Cu Yd. | 1494.36 |
| | REINFORCING STEEL | 259170 LB. | |
| | STRUCTURAL STEEL | 334400 LB. | 336,952 |
| | METAL RAILING (SINGLE RAIL) | 750 Lin Ft. | 734.4 |
| | MECHANICAL TAMPING | 72 Hr. | 386.5 |
| | RE. CONC. SLOPE PROTECTION | 1573 Sq Yd. | 1544.74 |
| | 3" RIGID STEEL CONDUIT | 400 Lin Ft. | 368 |

## STANDARD DRAWINGS

| SHEET NUMBER | DESCRIPTION |
|---|---|
| ST-1 | RAILING DETAILS |
| ST-5 | LIGHT DETAILS |
| SS-3 | STD. STEEL DETAILS |
| MR-1 | METAL RAILING DETAILS |

## INDEX OF SHEETS



| SHEET NUMBER | DESCRIPTION |
|---|---|
| 1 | KEY PLAN & INDEX SHEET |
| 2 | DECK PLAN & ELEVATION |
| 3 | BORING LOGS |
| 4 | FOUNDATION PLAN |
| 5 | ABUTMENT NO. 1 & NO. 3 |
| 6 | ABUTMENT NO. 2 & NO. 4 |
| 7-8 | ABUTMENT DETAILS |
| 9 | PIER NO. 1 & NO. 2 |
| 10 | PIER NO. 3 & NO. 4 |
| 11 | FRAMING PLAN |
| 12 | TRANSVERSE SECTION |
| 13 | STEEL DETAILS |
| 14 | CONCRETE DETAILS |
| 15-16 | REINFORCING SCHEDULE |
| 17-18 | RE. CONC. SLOPE PROTECTION |
| 19 | SCREED ELEVATIONS |
| 100 | LIGHTING DETAILS |



## NOTES

...n For Highway Bridges, 1961 Edition

...IS:
...remanship Shall Be In Accordance With The State Standard ...ge Construction, 1960 Edition And Supplements Thereto ...Request For Bids.

...nate Loading In Accordance With The A.A.S.H.O. Specifications

| | |
|---|---|
| | 18,000 p.s.i. |
| | 20,000 p.s.i. |
| Compression | 1,200 p.s.i. |
| ...engths | 3,000 p.s.i. |

...ructural Steel Shall Conform To A.S.T.M. Designation A-7.

...E, Low Alkali Cement Shall Be Used Throughout

...s Shall Be New Billet Steel, Intermediate Grade, Conforming ...hall Have Deformations Conforming To A.S.T.M. Designation M137

...cture, Shall Have 1½" Chamfers And 1½" Fillets Unless Otherwise ... And Sidewalk Shall Have ¾" Chamfers And ¾" Fillets Unless Otherwise ... joints and joint filler to be Beveled ¾" or Trimmed.

...If Necessary To Suit Conditions Encountered In Construction

...C. And G.S. Mean Sea Level Datum Of 1929

...Approval Before Fabrication Of Steel

**KEY PLAN & INDEX SHEET**

SHEET 1 OF 19 SHEETS

UTAH STATE ROAD COMMISSION
SALT LAKE CITY, UTAH
BRIDGE DEPARTMENT

LEHI 3RD WEST OVERPASS
155'-7 1/8" O. TO O. 47° XING ∠
STA. 75+48.06 I-15-6(10)276 1 PE CONTR
LEHI-PROVO UTAH COUNTY

DESIGNED BY: BK AS NOTED
DRAWN BY: JK ISSUED: Oct. 29, 1962
TRACED BY: PROPOSED: D. L. Sargent
CHECKED BY: JKB CHIEF BRIDGE ENGINEER
BY: DWG. NO. C-342
PA.

STRUCTURE 1-02

REGISTERED PROFESSIONAL ENGINEER NO. 2164 F. R. BOWVILLE STATE OF UTAH

DESIGN AND DRAWING BY
WESTERN ENGINEERS, INC. AND
EDWARDS AND KELCEY
CONSULTING ENGINEERS

SUBMITTED BY: F. R. Bowville CHIEF ENGINEER
UTAH ENGR. LIC. NO. 2162

FINAL 12-30-63

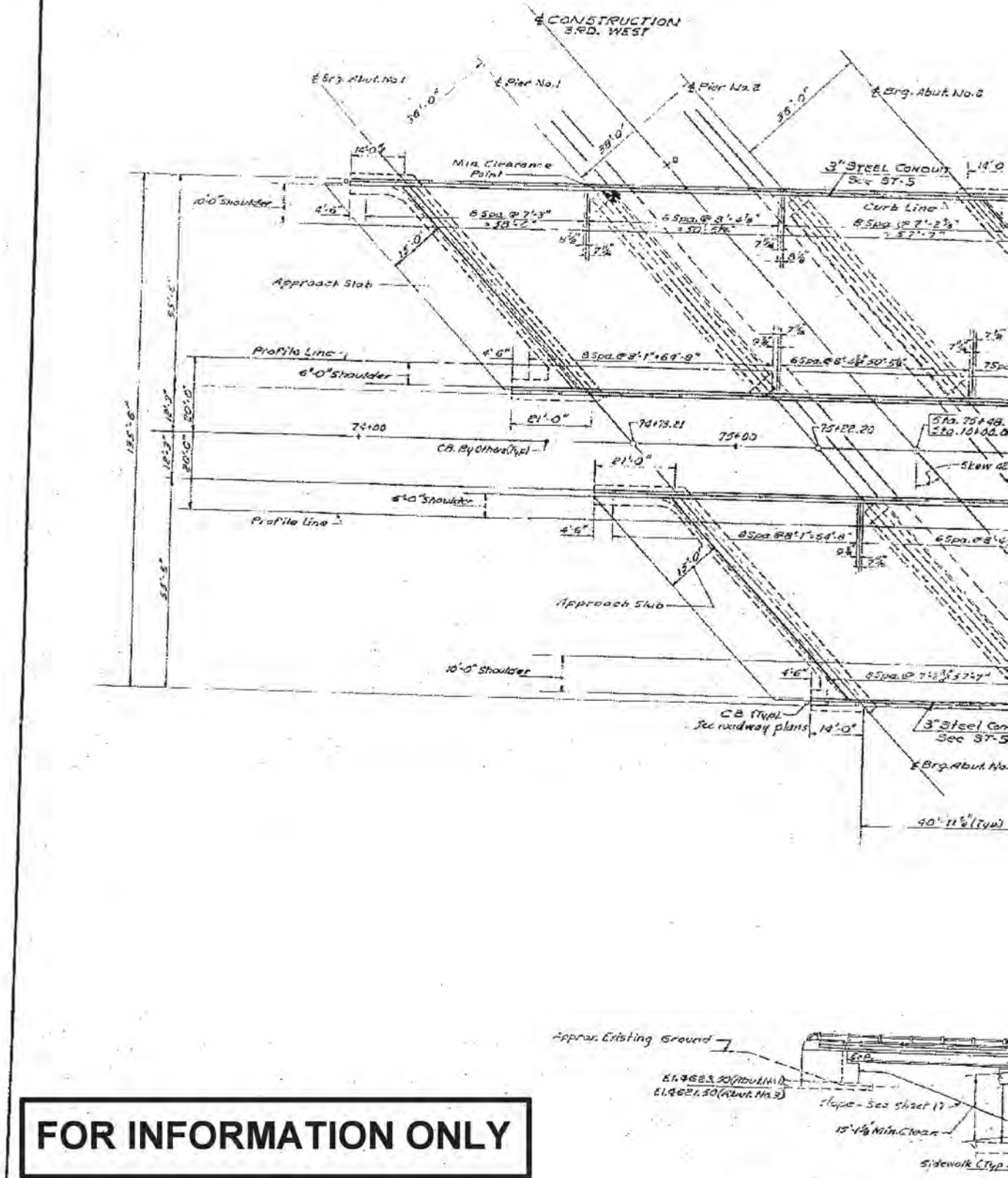


**FOR INFORMATION ONLY**

02-MAY-2005 DGN Files IP PWPdms\16721\4433.C-042-B2.PowerGeogen

| FED. ROAD DIST. NO. | STATE | FED. AID PROJ. NO. | FISCAL YEAR | SHEET NO. | TOTAL SHEETS |
|---|---|---|---|---|---|
| UT | UTAH | | | 6 | |

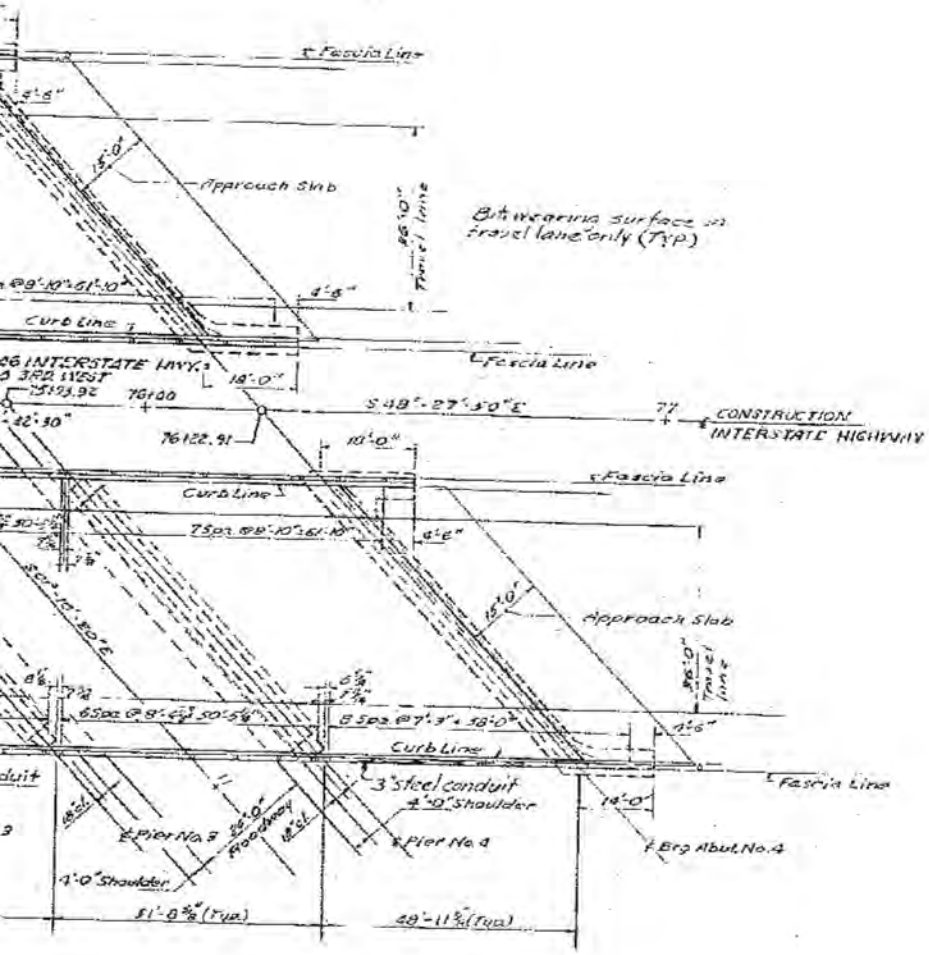


## PLAN

SCALE: 1/16" = 1'-0"

NOTES:
FOR RAILING DETAILS SEE DRG NO'S. ST-1 AND MR-1.
FOR JOINT FILLER DETAILS AT PARAPETS SEE SHEET 12

## DECK PLAN & ELEVATION

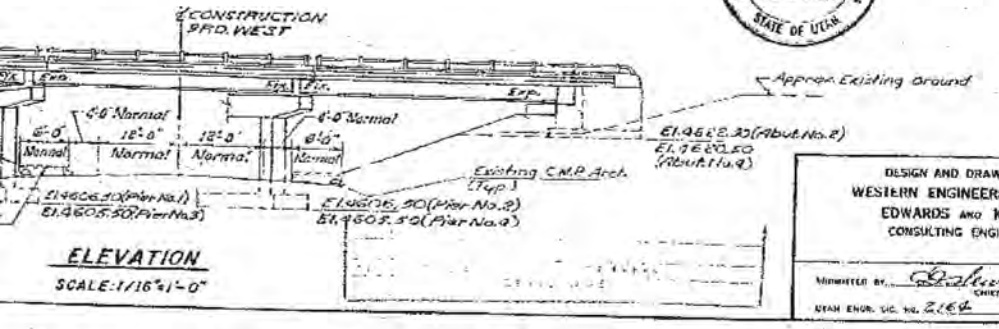


## ELEVATION

SCALE: 1/16" = 1'-0"

REGISTERED PROFESSIONAL ENGINEER
NO. 2164
J. R. NEWBILL
STATE OF UTAH

DESIGN AND DRAWING BY
WESTERN ENGINEERS, INC. AND
EDWARDS AND KELCEY
CONSULTING ENGINEERS

SUBMITTED BY: [signature] CHIEF ENGINEER
UTAH ENGR. LIC. NO. 2164

SHEET 2 OF 19 SHEETS

UTAH STATE ROAD COMMISSION
SALT LAKE CITY, UTAH
BRIDGE DEPARTMENT

LEHI 3RD WEST OVERPASS
155'-7 1/8" O. TO O. 133° XING ∠
STA. 75+16.06 2-15-6 (1)270 1 CONT
LEHI-PROVO UTAH COUNTY

DESIGNED BY: KY SCALE: AS NOTED
DRAWN BY: EG ISSUED: OCT. 29, 1968
TRACED BY: APPROVED: D.L. Sorensen
CHIEF BRIDGE ENGINEER
CHECKED BY: [signature]

No.
Date
NO. C-342

STRUCTURE 6-D2

# FOR INFORMATION ONLY

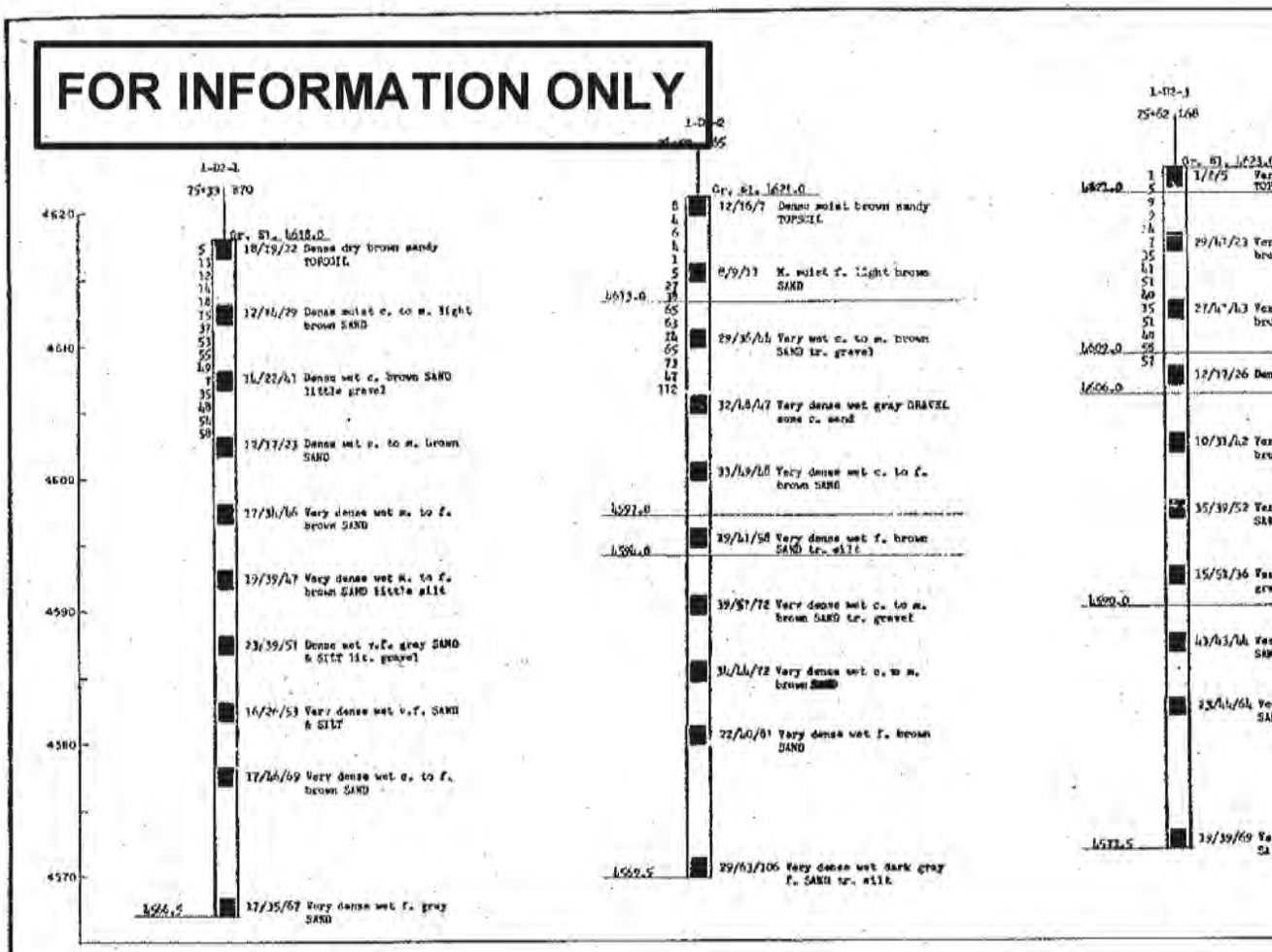

| FED. ROAD DIV. NO. | STATE | FED. AID PROJ. NO. | FISCAL YEAR | SHEET NO. | TOTAL SHEETS |
|---|---|---|---|---|---|
| 4 T | UTAH | | | 7 | |

1-D2-4

76+93 R70

Gr. El. 4616.0

| Elev. | Blows | Description |
|---|---|---|
| 4616.0 | 2, 1, 8, 8, 16 | 3/3/2 Dr. moist dark brown silty TOPSOIL |
| | 3, 26, 40, 47, 42 | 20/17/16 Dense moist c. to f. brown SAND lit. gravel |
| | 16, 50, 48, 62, 64 | 31/23/61 Dense moist gray m. to f. SAND |
| | | 31/52/83 Very dense wet c. to f. gray SAND |
| | | 42/38/46 Very dense wet c. to f. brown SAND lit. gravel |
| | | 21/28/33 Very dense wet m. to f. brown SAND lit. clayey silt |
| | | 50/31/36 Same as above changing to very dense wet f. gray SAND lit. silt |
| | | 24/51/35 Very dense wet f. SAND to brown and gray 1/8" laminations |
| | | 21/43/53 Very dense wet f. gray SAND tr. silt |
| 4556.5 | | 28/51/52 Very dense wet m. to f. gray SAND |

## LEGEND

Boring No. — 1-4-2

Interstate Station — 22+63 R72 — Offset

Ground Elevation — Gr. El. 4562

Ground Water Table Elevation — 4557.1

Number of Blows Used to drive casing 12 inches with 300 lb. hammer falling 2 ft. (Typical)

Strata Change Elevation (Typical) — 4550

Boring Advanced Without Casing

Location of Sample (Typical) — 4539

Bottom of Boring Elevation — 4535.5

Number of Blows Used to drive 1-3/8" I.D. sampler with 140 lb. hammer falling 30 inches — 1st. 6 inches, 2nd. 6 inches, 3rd. 6 inches

| Elev. | Blows | Description |
|---|---|---|
| | 3, 7, 9 | 2/4/5 Stiff m. plastic brown clay some silt-TOPSOIL |
| | 12, 27, 10, 31, 22, 33, 40 | 11/13/17 M. dense wet tan m. to c. SAND, some silt, tr. f. gravel |
| | 36, 43, 86, 92, 106 | 15/21/30 Dense wet tan m. to c. SAND, some gravel |
| | | 1/6/8 Stiff, low plastic brown CLAY & SILT, tr. f. sand (LL = 40, PL = 28, W = 32) |
| | | 11/10/12 Very stiff, plastic gray CLAY & SILT, tr. f. sand (W = 35, qu = 17/ft²) |
| | | 9/12/20 Very stiff varved plastic gray silty CLAY & f. silty SAND |

visual soil description for each sample and results of classification tests, if any (Typical)

ABBREVIATIONS IF AND WHEN USED:

br. = brown
gr. = gray
org. = organic
f. = fine
v. f. = very fine
m. = medium
c. = coarse
sa. = some
tr. = trace
lit. = little
LL = Liquid Limit in %
PL = Plastic Limit in %
W = Natural Moisture Content in %
qu = Unconfined compression test from pocket penetrometer in T/ft.²

1-D2-8

76+20 R62

Gr. El. 4617.0

| Elev. | Blows | Description |
|---|---|---|
| 4615.0 | 7, 8, 5, 6, 2 | 7/12/5 Dense moist dark brown sandy TOPSOIL |
| | 1, 7, 25, 31, 52 | 19/20/31 M. dry light brown m. to f. SAND |
| | 12, 47, 62, 24, 66 | 17/29/50 Very dense wet c. to f. SAND |
| | | 26/47/42 Same as above |
| | | 37/28/46 Same as above |
| | | 26/31/46 Very dense wet m. to f. brown SAND |
| 4585.5 | | 24/33/52 Very dense wet f. brown SAND |

# BORING LOGS

REGISTERED PROFESSIONAL ENGINEER NO. 2164 J. R. NONVILLE STATE OF UTAH

DESIGN AND DRAWING BY
WESTERN ENGINEERS, INC. AND
EDWARDS AND KELCEY
CONSULTING ENGINEERS

SUBMITTED BY J. R. Nonville CHIEF ENGINEER
UTAH ENGR. LIC. NO. 2164

SHEET 3 OF 19 SHEETS

UTAH STATE ROAD COMMISSION
SALT LAKE CITY, UTAH
BRIDGE DEPARTMENT

LEHI 3RD WEST OVERPASS
155'-7 1/8" O. TO O. 47° XING L
STA. 75448.06 3-15-6 (19) 236.190 COUNTY
LEHI-PROVO UTAH COUNTY

INTERVIEWED BY EKK SCALE AS NOTED
DRAWN BY EKK DATE Oct. 29, 1962
TRACED BY EKK APPROVED R. L. Sargent
CHECKED BY EKK EKK CHIEF BRIDGE ENGINEER

NO. C-342

STRUCTURE 4-D2

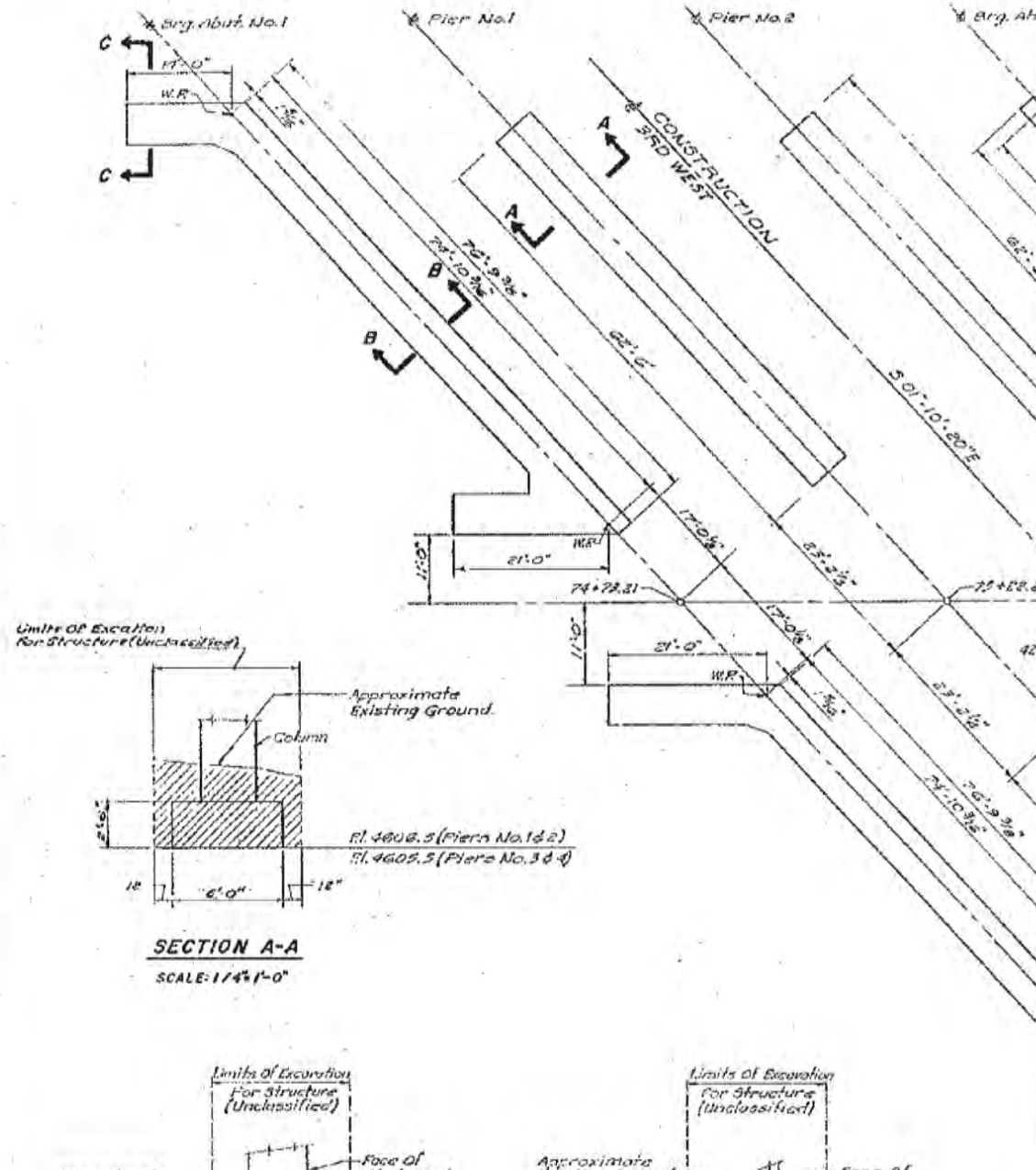


DGN Files: IP PwPlot=11572\4433.C-342-R4.Form\Footer
02-MAY-2008

| FED. ROAD DIST. NO. | STATE | FED. AID PROJ. NO. | FISCAL YEAR | SHEET NO. | TOTAL SHEETS |
|---|---|---|---|---|---|
| U.T. | UTAH | | | 8 | |

**FOR INFORMATION ONLY**

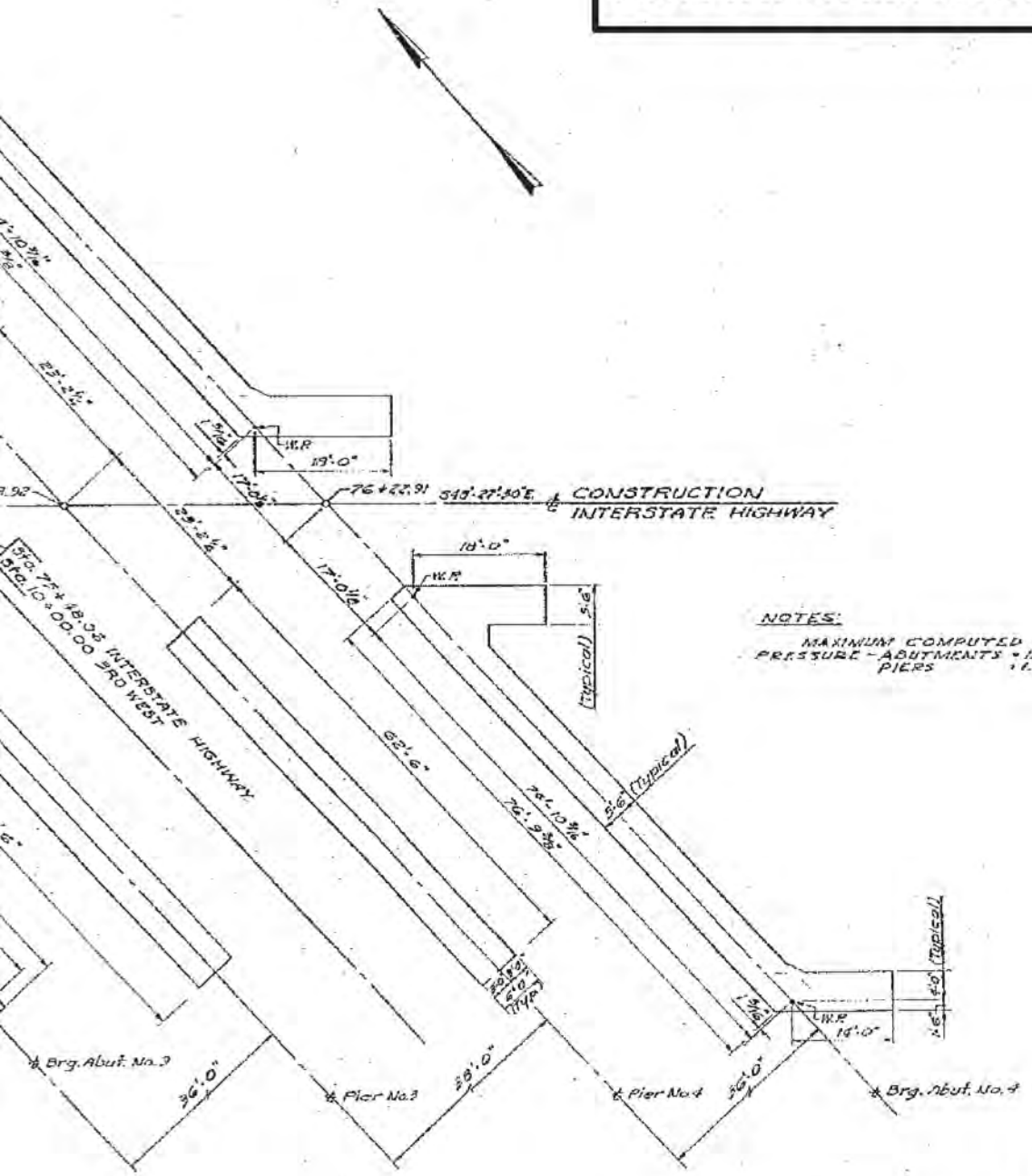


NOTES:

MAXIMUM COMPUTED SOIL BEARING PRESSURE - ABUTMENTS = 1.6 Tons/Sq. Ft.
PIERS = 1.8 Tons/Sq. Ft.

## FOUNDATION PLAN

SCALE: 1" = 10'-0"

REGISTERED PROFESSIONAL ENGINEER NO. 2164 J. R. NEWELLE STATE OF UTAH

DESIGN AND DRAWING BY
WESTERN ENGINEERS, INC. AND
EDWARDS AND KELCEY
CONSULTING ENGINEERS

SUBMITTED BY J. R. Newelle CHIEF ENGINEER
UTAH ENGR. LIC. NO. 2164

## FOUNDATION PLAN

SHEET 4 OF 18 SHEETS

UTAH STATE ROAD COMMISSION
SALT LAKE CITY, UTAH
BRIDGE DEPARTMENT

LEHI 3RD WEST OVERPASS
155'-7 1/8" O. TO O. 47° XING L
STA. 75+48.06 I-15-6 (18) 266 1ST CONTR
LEHI-PROVO UTAH COUNTY

DESIGNED BY KG SCALE AS NOTED
DRAWN BY E.D. DATE Oct. 23, 1962
TRACED BY APPROVED D. L. Sargent CHIEF BRIDGE ENGINEER
CHECKED BY LCD

BR. NO. BRIDGE NO. C-342

STRUCTURE 1-02

**FOR INFORMATION ONLY**

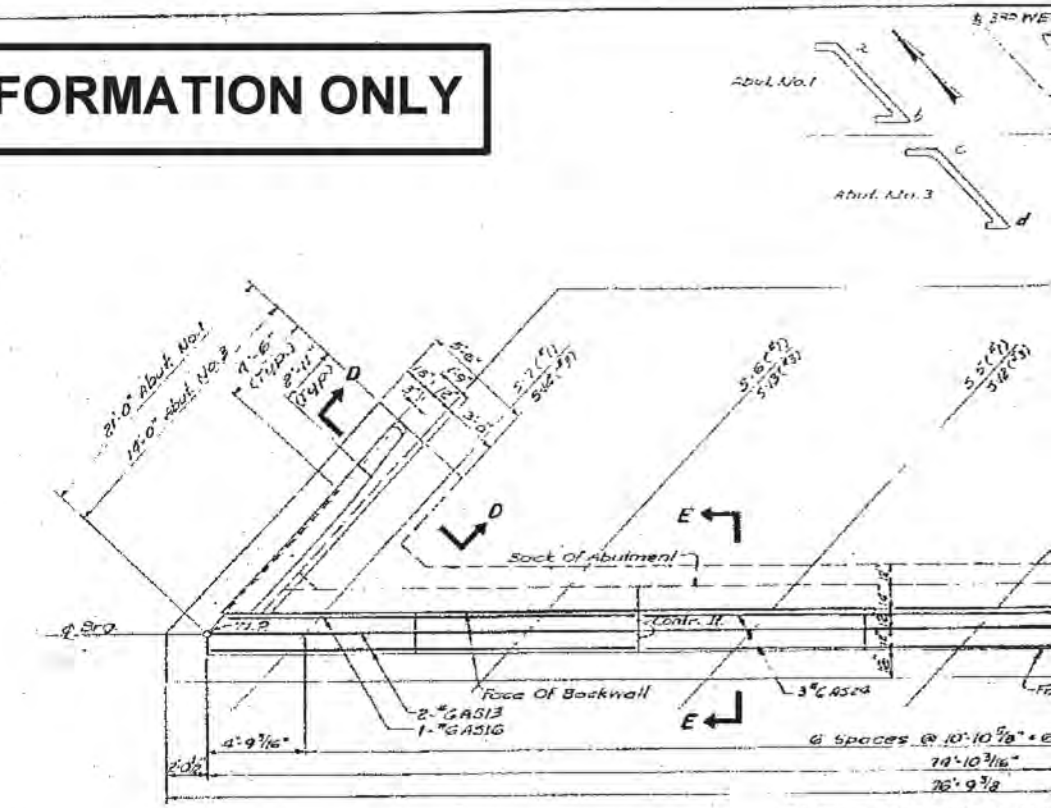


PLAN — ABUTMENT NO
ABUTMENT NO.3-SIMILA
SCALE: 1/4"=1'-0"

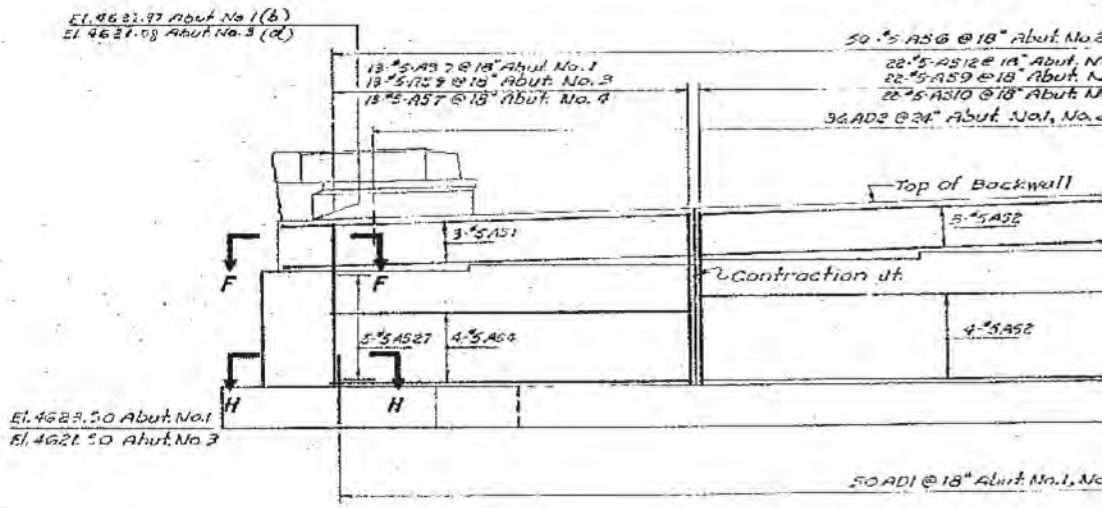


REINFORCEMENT—BACKFAC
ABUTMENT NO. 2, NO. 3 &
SCALE: 1/4"=1'-

DGN Files 3P, PWPubns\16721\4433.C-042-85.PonteGoogan
02-MAY-2005

| FED. ROAD DIST. NO. | STATE | FED. AID PROJ. NO. | FINAL PLAN | SHEET NO. | TOTAL SHEETS |
|---|---|---|---|---|---|
| U T | UTAH | | | 9 | |

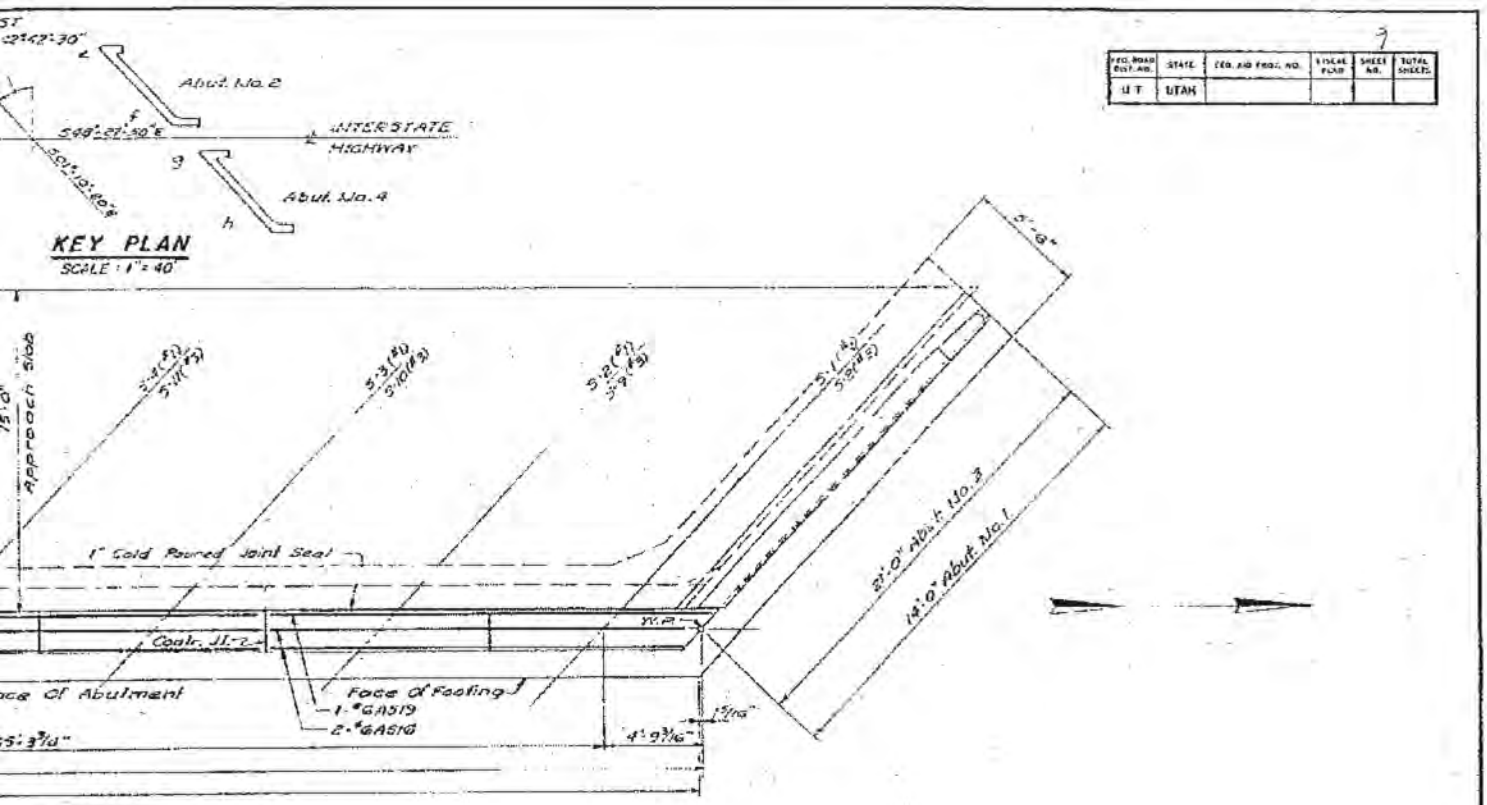


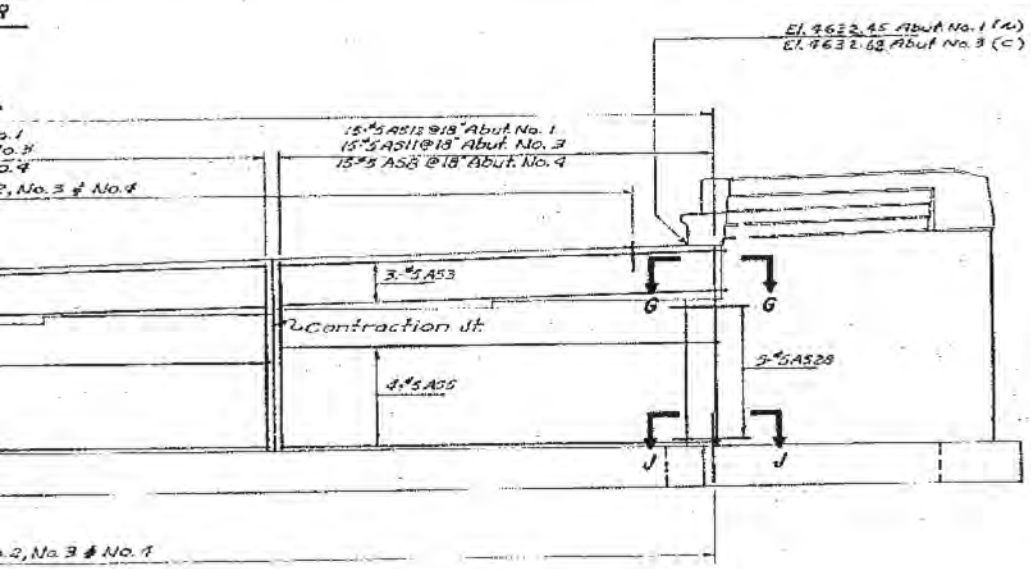


| STRINGER NO. | ELEVATION ABUT. NO. 1 |
|---|---|
| S-1 | 4630.14 |
| S-2 | 4630.23 |
| S-3 | 4630.33 |
| S-4 | 4630.41 |
| S-5 | 4630.49 |
| S-6 | 4630.57 |
| S-7 | 4630.66 |
| **STRINGER NO.** | **ELEVATION ABUT. NO. 3** |
| S-8 | 4630.31 |
| S-9 | 4630.06 |
| S-10 | 4629.80 |
| S-11 | 4629.55 |
| S-12 | 4629.27 |
| S-13 | 4629.03 |
| S-14 | 4628.77 |

## ABUTMENT NO. 1 & NO. 3

## E-ABUTMENT NO. 1
## NO. 4 - SIMILAR

NOTES:
FOR FOOTING LOCATION PLAN SEE SHEET 4
FOR ELEVATIONS OF WINGWALLS & FOOTING REINF. SEE SHEET 8
FOR ANCHOR BOLT LOCATION PLAN, CONTR. JT. DETAIL & SECTIONS NOT SHOWN SEE SHEET 7.

REGISTERED PROFESSIONAL ENGINEER NO. 2164 J. R. NEWVILLE STATE OF UTAH

DESIGN AND DRAWING BY
WESTERN ENGINEERS, INC. AND
EDWARDS AND KELCEY
CONSULTING ENGINEERS

SUBMITTED BY J. R. Newville CHIEF ENGINEER
UTAH ENGR. LIC. NO. 2164

SHEET 5 OF 19 SHEETS

UTAH STATE ROAD COMMISSION
SALT LAKE CITY, UTAH
BRIDGE DEPARTMENT

LEHI 3RD WEST OVERPASS
155'-7 1/8" O. TO O. 47° XING ∠
STA. 75+48.06 I-15-6 (9)836 1ST CONTR.
LEHI-PROVO UTAH COUNTY

DESIGNED BY YG SCALE AS NOTED
DATE OCT. 22, 1963
DRAWN BY
TRACED BY
CHECKED BY J.L.R. CHIEF ENGINEER

No. C-342

STRUCTURE 6-02

**FOR INFORMATION ONLY**

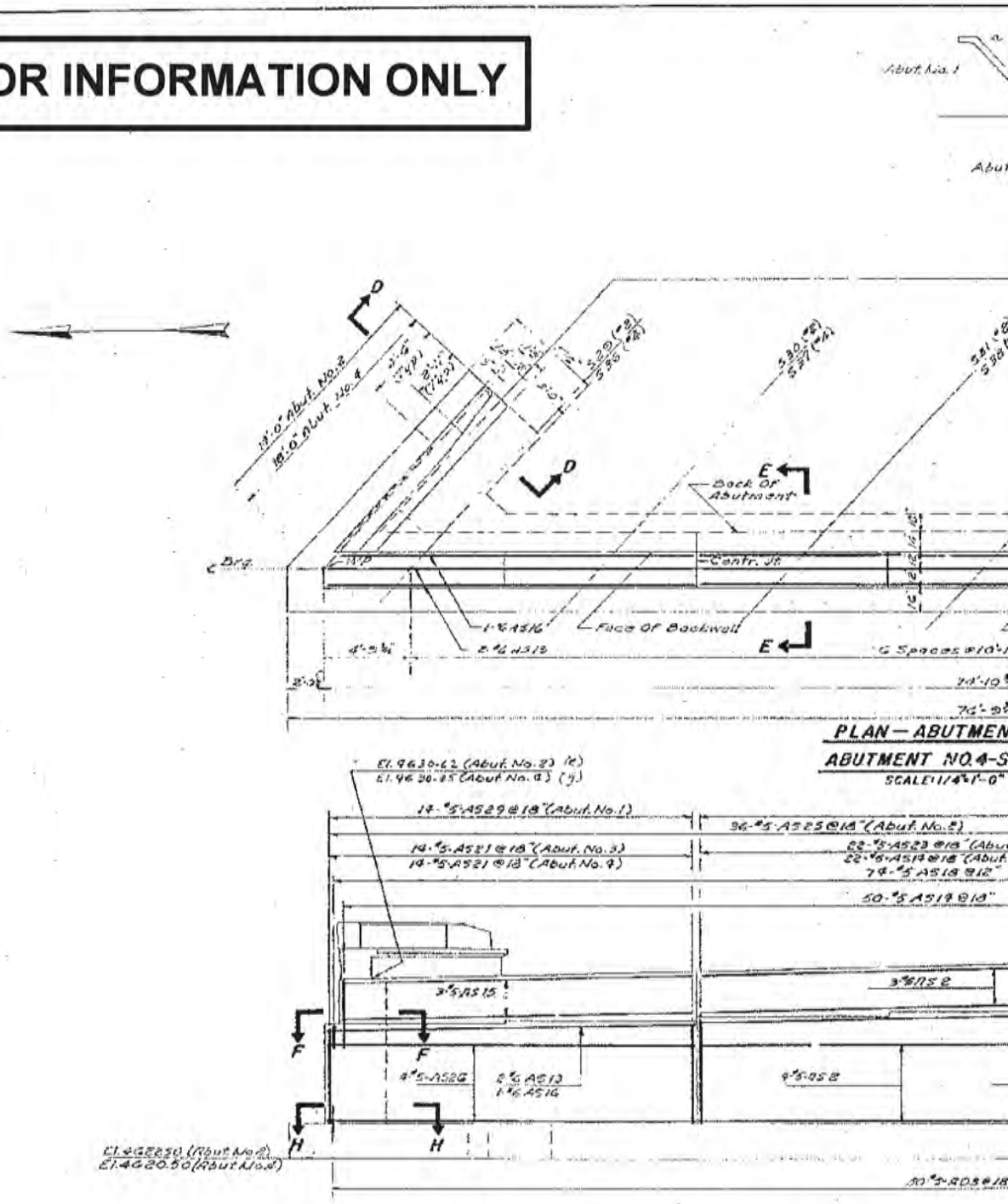


02-MAY-2025 DGN Files: IP, PwPlot=11572\4433_C-342-05_Front6.pdf

| FED. ROAD DIST. NO. | STATE | FED. AID PROJ. NO. | FISCAL YEAR | SHEET NO. | TOTAL SHEETS |
|---|---|---|---|---|---|
| UT | UTAH | | | | 10 |

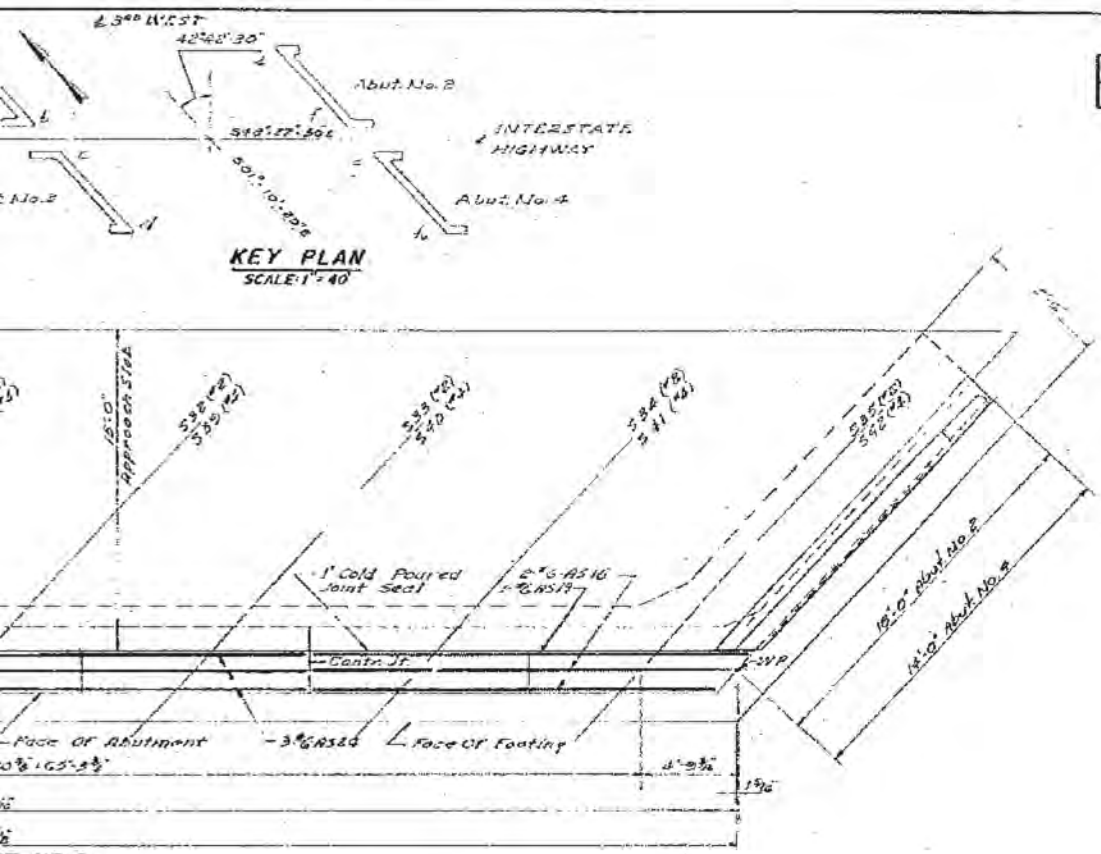


T NO. 2
IMILAR

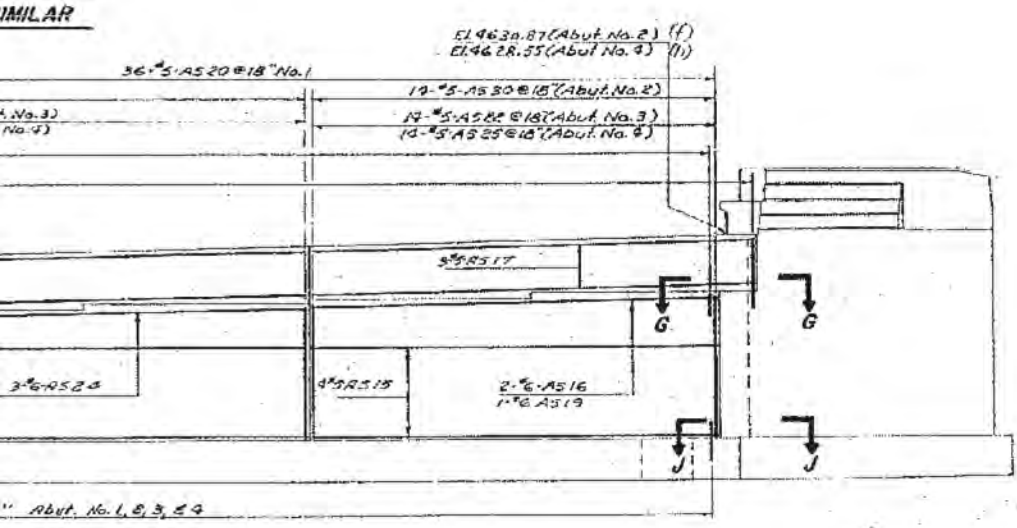


| STRINGER NO. | ELEVATION ABUT. NO. 2 |
|---|---|
| S-29 | 4628.31 |
| S-30 | 4628.36 |
| S-31 | 4628.40 |
| S-32 | 4628.45 |
| S-33 | 4628.49 |
| S-34 | 4628.52 |
| S-35 | 4628.56 |
| **STRINGER NO.** | **ELEVATION ABUT. NO. 4** |
| S-36 | 4628.04 |
| S-37 | 4627.74 |
| S-38 | 4627.45 |
| S-39 | 4627.15 |
| S-40 | 4626.85 |
| S-41 | 4626.55 |
| S-42 | 4626.16 |

ABUTMENT NO. 2 & NO. 4

ACE – ABUTMENT NO. 2
& NO. 4 - SIMILAR
-0"

NOTES:
FOR FOOTING LOCATION PLAN SEE SHEET 4
FOR ELEVATIONS OF WINGWALLS & FOOTING REINF. SEE SHEET 8
FOR ANCHOR BOLT LOCATION PLAN, CONTR. JT. DETAIL & SECTIONS NOT SHOWN SEE SHEET 7

REGISTERED PROFESSIONAL ENGINEER
No. 2164
L. R. NEWBERRY
STATE OF UTAH

DESIGN AND DRAWING BY
WESTERN ENGINEERS, INC. AND
EDWARDS AND KELCEY
CONSULTING ENGINEERS

SUBMITTED BY: CHIEF ENGINEER
UTAH ENGR. LIC. NO. 2164

SHEET 6 OF 19 SHEETS

UTAH STATE ROAD COMMISSION
SALT LAKE CITY, UTAH
BRIDGE DEPARTMENT

LEHI 3RD WEST
OVERPASS
155'-7 1/8" O. TO O. 47° XING ℄
STA. 75+48.06 I-15-6 (13)234 LEHI-PROVO UTAH COUNTY

DESIGNED BY: YG
DRAWN BY: D
TRACED BY:
CHECKED BY: LRB
SCALE: AS NOTED
DATE: Oct. 29, 1967
APPROVED: D. L. Sargent
CHIEF ENGINEER

DR. NO. C-342

STRUCTURE 1-D2

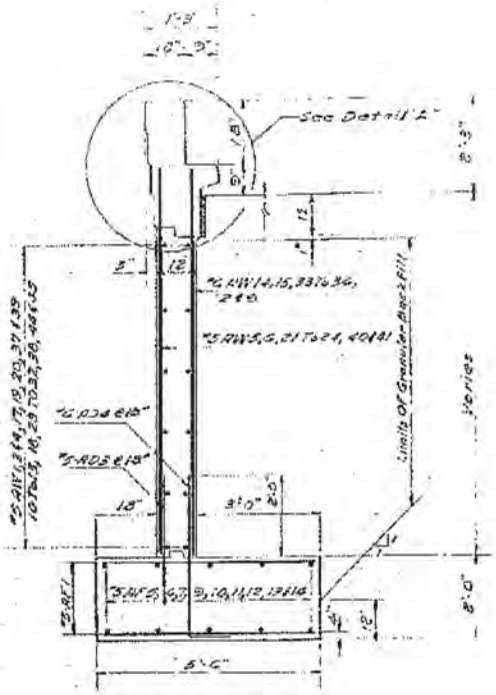


SECTION D-D

SCALE: 1/2" = 1'-0"

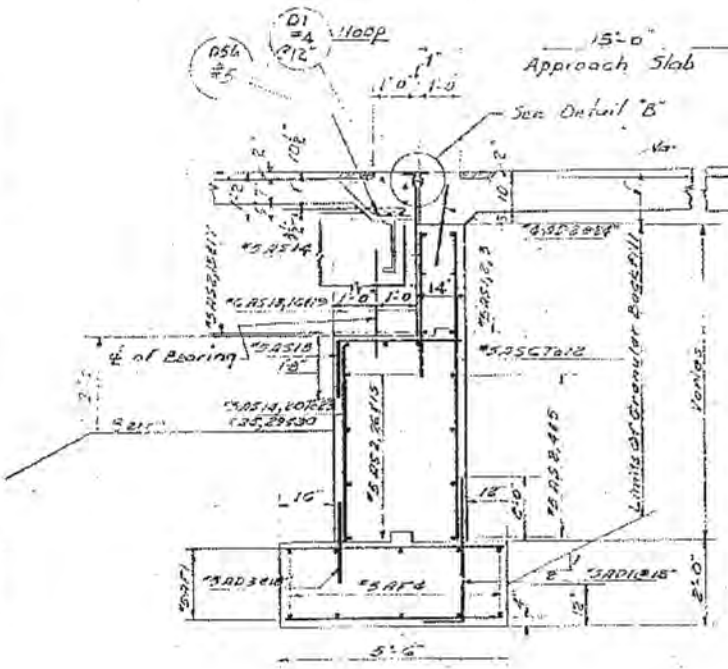


SECTION E-E

SCALE: 1/2" = 1'-0"

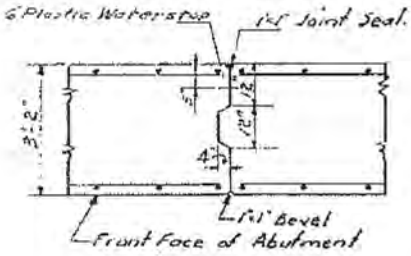


CONTRACTION JOINT

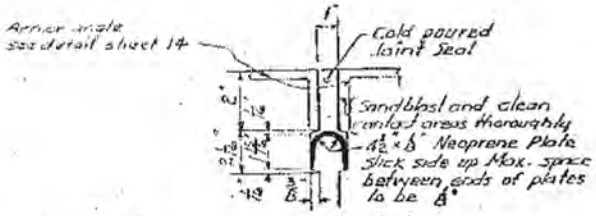


DETAIL "B"

**FOR INFORMATION ONLY**

| FED. ROAD DIST. NO. | STATE | FED. AID PROJ. NO. | FISCAL YEAR | SHEET NO. | TOTAL SHEETS |
|---|---|---|---|---|---|
| 07 | UTAH | | | | |

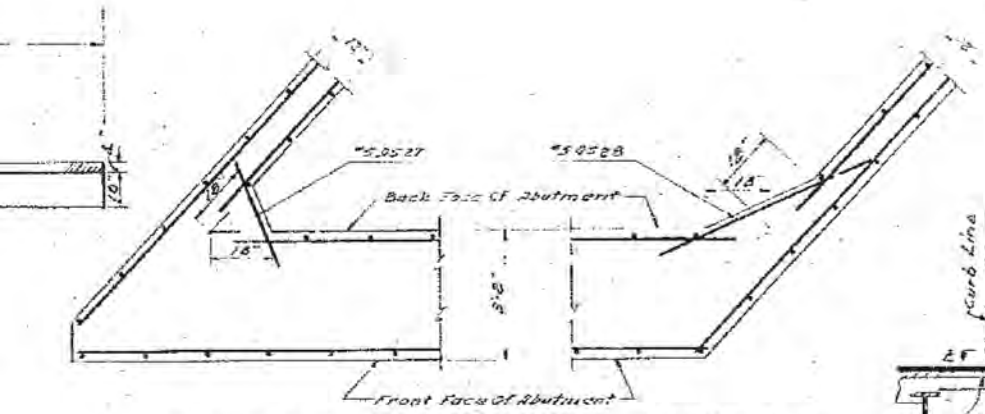


SECTION H-H

SECTION J-J

SCALE: 1/2" = 1'-0"

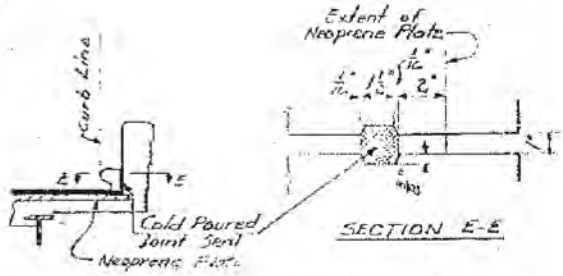


SECTION E-E

TYPICAL JOINT DETAIL AT PARAPET FOR ABUTMENTS AND PIER #1 & #3

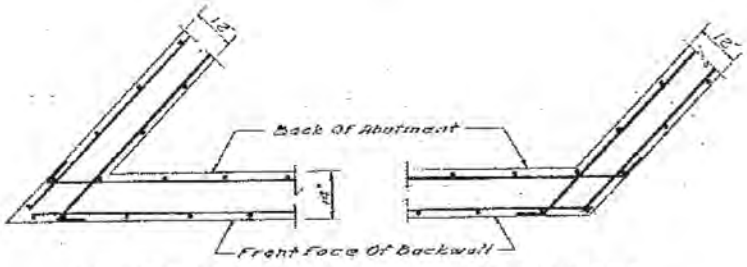


SECTION F-F

SECTION G-G

SCALE: 1/2" = 1'-0"

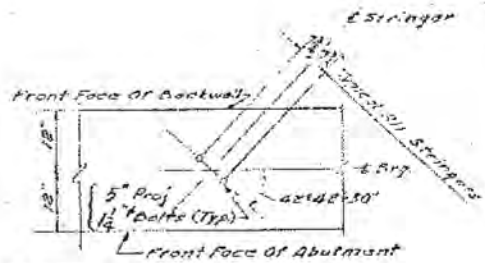


ANCHOR BOLT LOCATION PLAN

SCALE: 3/4" = 1'-0"

See Sheet 55-3

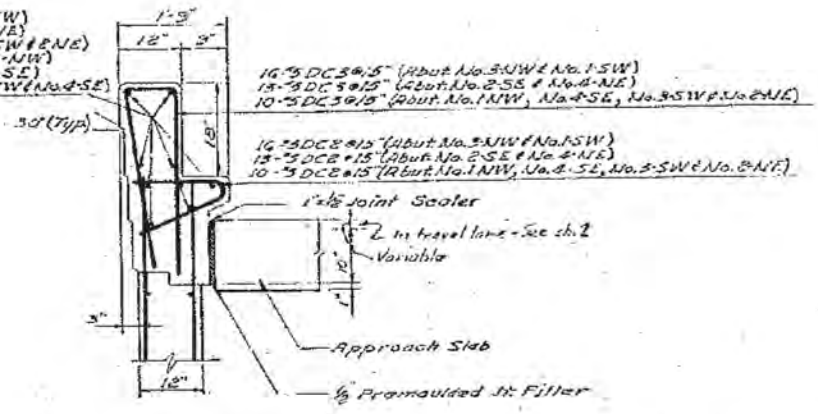


DETAIL "A"

SCALE: 3/4" = 1'-0"

ABUTMENT DETAILS

SHEET 7 OF 19 SHEETS

UTAH STATE ROAD COMMISSION
SALT LAKE CITY, UTAH
BRIDGE DEPARTMENT

LEHI 3RD WEST OVERPASS
155'-7⅛" O. TO O. 47° XING ℄
STA. 75+46.06
LEHI-PROVO
I-15-6 (19)276 1st CONTR.
UTAH COUNTY

DESIGNED BY KY
DRAWN BY T.Q.
TRACED BY
CHECKED BY J.L.S.
SCALE AS NOTED
ISSUED 1-25-1963
APPROVED 2-5-5 original
SHEET ABOVE SUBMITTED
NO.
NO.
DWG. NO. C-342

STRUCTURE 1-02

REGISTERED PROFESSIONAL ENGINEER NO. 2164 L. B. NEWVILLE STATE OF UTAH

DESIGN AND DRAWING BY
WESTERN ENGINEERS, INC. AND
EDWARDS AND KELCEY
CONSULTING ENGINEERS

SUBMITTED BY L. B. Newville
CHIEF ENGINEER
UTAH ENGR. LIC. NO. 2164

**FOR INFORMATION ONLY**

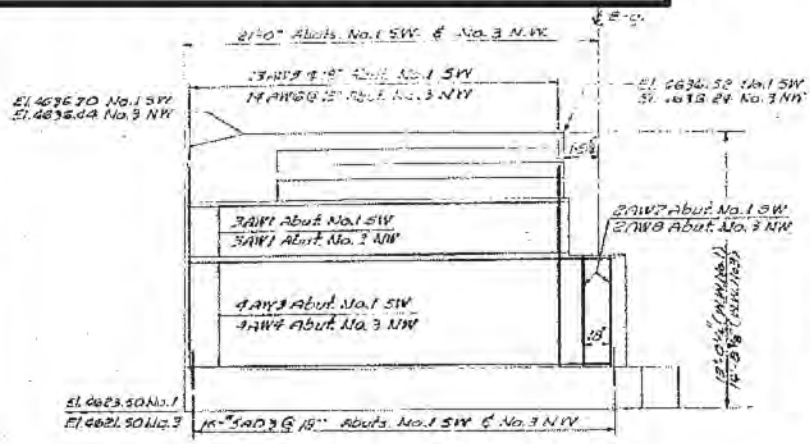


REINFORCEMENT – FRONT FACE

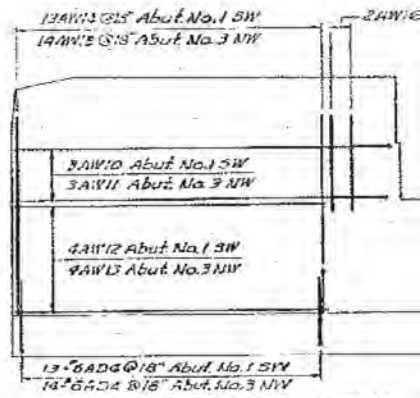


REINFORCEMENT – BACK FACE

SOUTHWEST WINGWALL – ABUT. NO. 1
NORTHWEST WINGWALL – ABUT. NO. 3

SCALE: 1/4" = 1'-0"

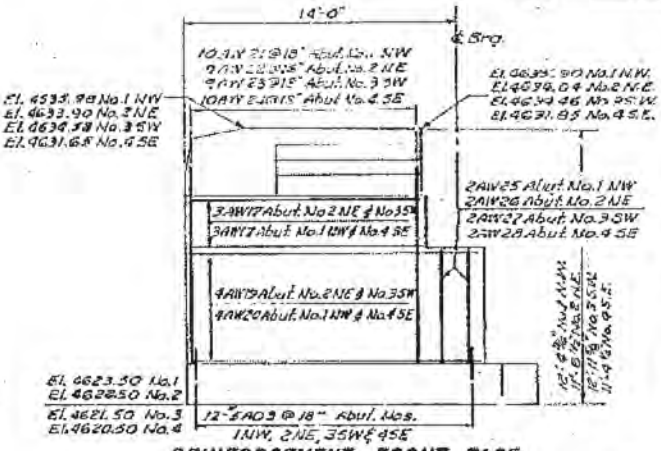


REINFORCEMENT – FRONT FACE

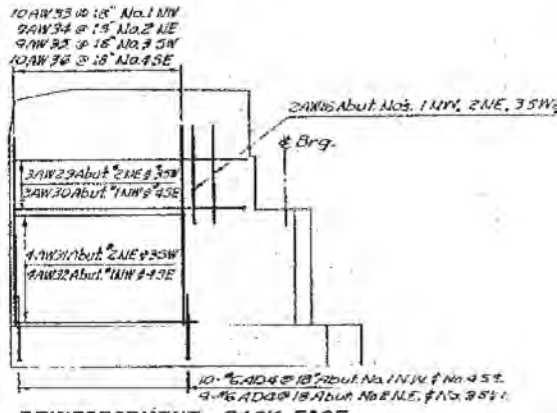


REINFORCEMENT – BACK FACE

NORTHWEST WINGWALL – ABUT. NO. 1
NORTHEAST WINGWALL – ABUT. NO. 2
SOUTHWEST WINGWALL – ABUT. NO. 3
SOUTHEAST WINGWALL – ABUT. NO. 4

SCALE: 1/4" = 1'-0"

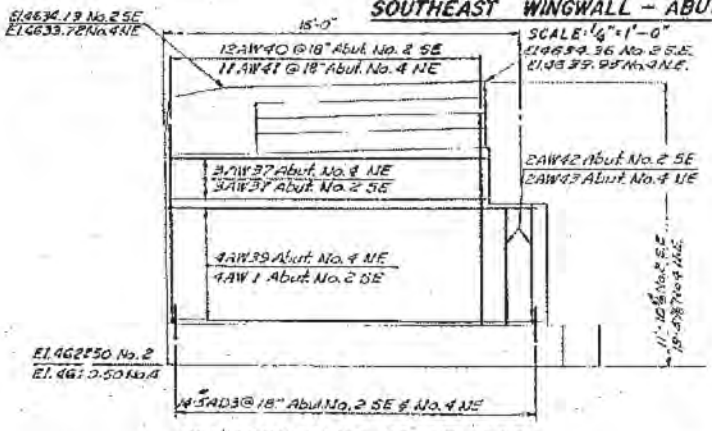


REINFORCEMENT – FRONT FACE

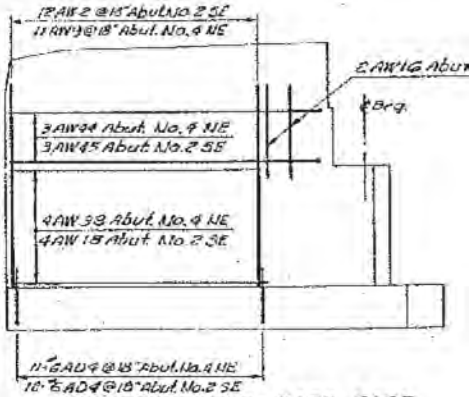


REINFORCEMENT – BACK FACE

SOUTHEAST WINGWALL – ABUT. NO. 2
NORTHEAST WINGWALL – ABUT. NO. 4

SCALE: 1/4" = 1'-0"

[redacted]

02-MAY-2005 DGN Files IP: PWPubnet\1672\4433.C-042-88.Pomeroy.dgn

12

| FED. ROAD DIST. NO. | STATE | FED. AID PROJ. NO. | FISCAL YEAR | SHEET NO. | TOTAL SHEETS |
|---|---|---|---|---|---|
| 8 T | UTAH | | | | |

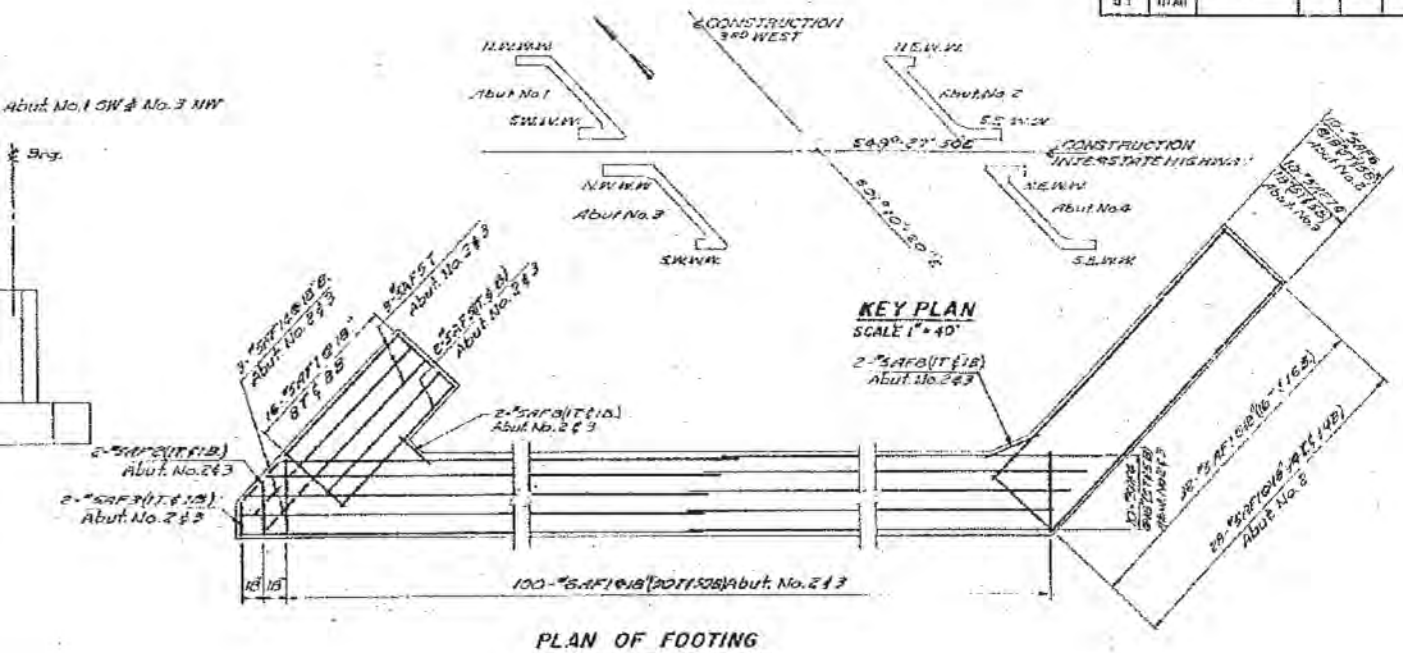


PLAN OF FOOTING
ABUTMENT NO. 2 & 3
SCALE: 3/16" = 1'-0"

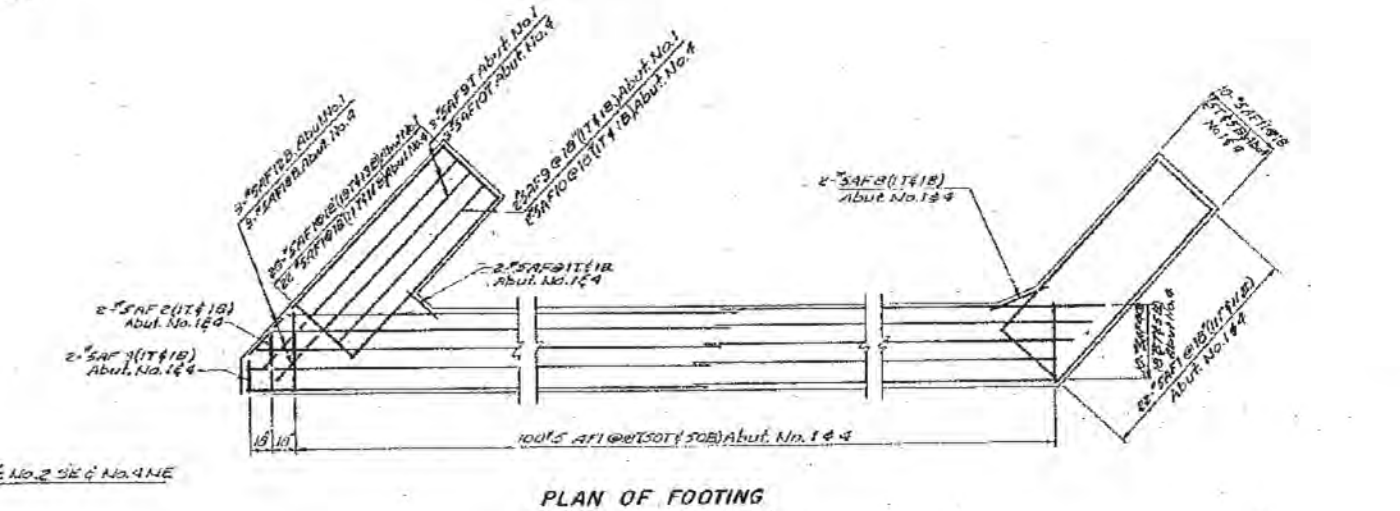


PLAN OF FOOTING
ABUTMENT NO. 1 & 4
SCALE: 3/16" = 1'-0"

ABUTMENT DETAILS

SHEET 3 OF 19 SHEETS

UTAH STATE ROAD COMMISSION
SALT LAKE CITY, UTAH
BRIDGE DEPARTMENT

LEHI 3RD WEST OVERPASS

155'-7 1/8" O.TO O. 47° XING ∠
STA. 75+48.05 I-15-6(15)226 (15 COUNTY)
LEHI - PROVO UTAH COUNTY

SCALE BY XG SCALE AS NOTED
DRAWN BY TD DATE Oct 23 1962
CHECKED BY D.L. Sargent CHIEF BRIDGE ENGINEER
CHECKED BY J.L.B. Dwg.
BR. NO. C-342
PR.

STRUCTURE I-02

REGISTERED PROFESSIONAL ENGINEER NO. 2164 J. R. NEWVILLE STATE OF UTAH

DESIGN AND DRAWING BY
WESTERN ENGINEERS, INC. AND
EDWARDS AND KELCEY
CONSULTING ENGINEERS

SUBMITTED BY J. R. Newville CHIEF ENGINEER
UTAH REG. ENG. NO. 2164

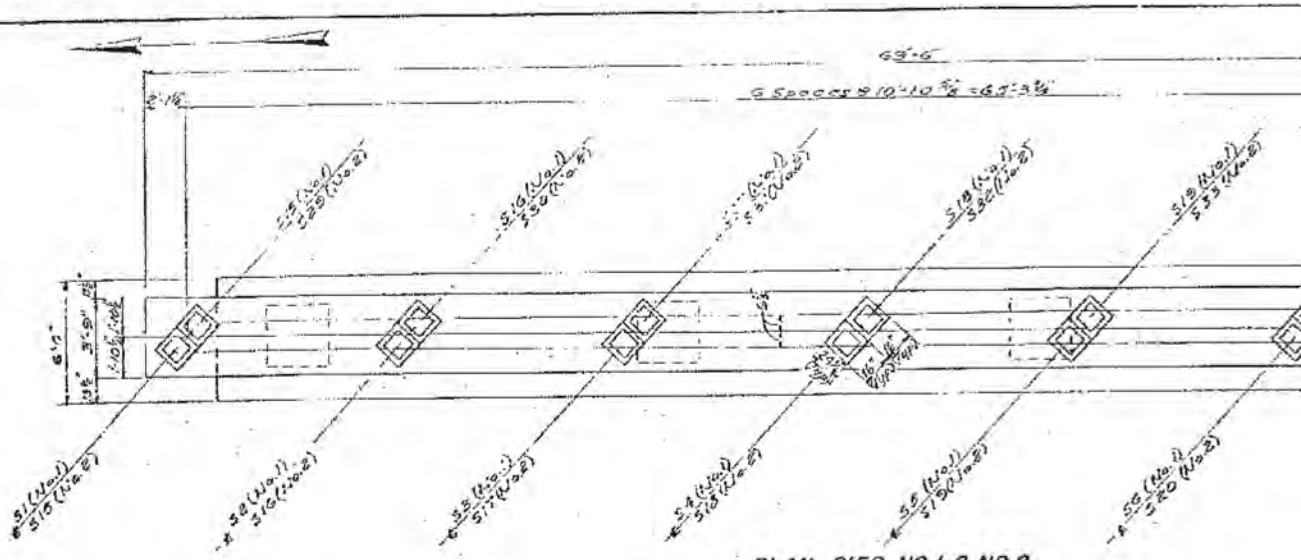

PLAN- PIER NO.1 & NO.2

SCALE: 1/4"=1'-0"

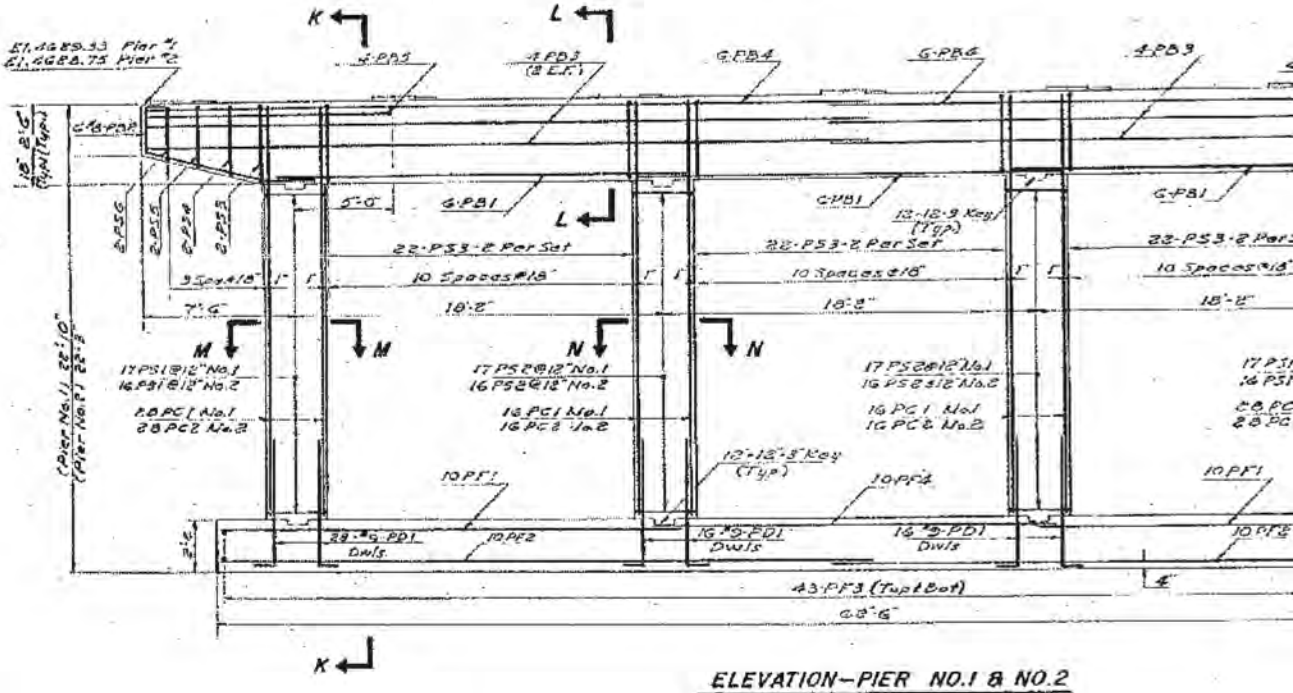

ELEVATION-PIER NO.1 & NO.2

SCALE: 1/4"=1'-0"

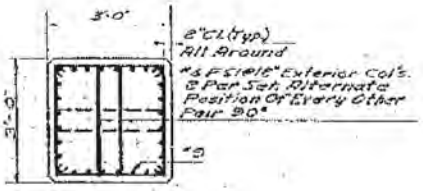

SECTION M-M

SCALE: 1/4"=1'-0"

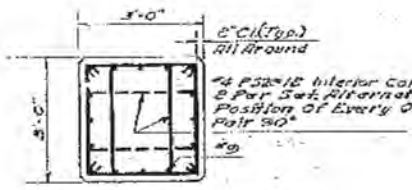

SECTION N-N

SCALE: 1/4"=1'-0"

| FED. ROAD DIST. NO. | STATE | FED. AID PROJ. NO. | FISCAL YEAR | SHEET NO. | TOTAL SHEETS |
|---|---|---|---|---|---|
| U T | UTAH | | | | |

**FOR INFORMATION ONLY**

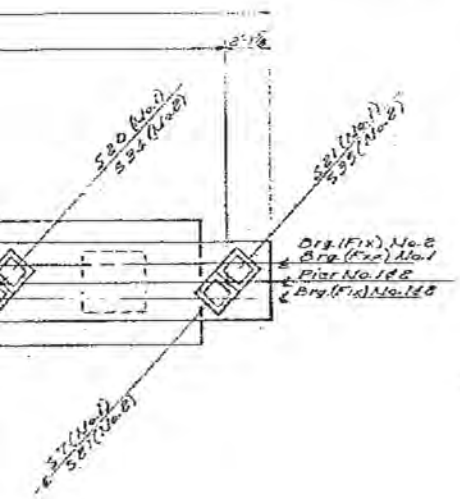


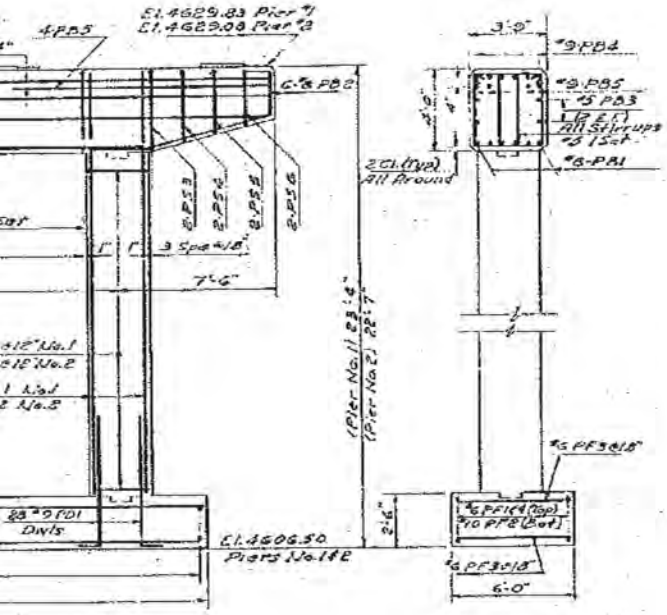


SECTION K-K

SCALE: 1/4" = 1'-0"

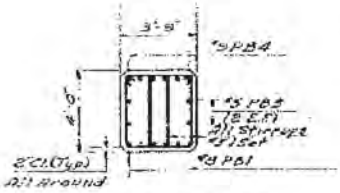


SECTION L-L

SCALE: 1/4" = 1'-0"

| STR. NO. | ELEVATION PIER NO.1 | STR. NO. | ELEVATION PIER NO.1 | STR. NO. | ELEVATION PIER NO.2 | STR. NO. | ELEVATION PIER NO.2 |
|---|---|---|---|---|---|---|---|
| 1 | 4629.66 | 15 | 4629.63 | 15 | 4629.02 | 29 | 4629.00 |
| 2 | 4629.73 | 16 | 4629.71 | 16 | 4629.08 | 30 | 4629.06 |
| 3 | 4629.80 | 17 | 4629.79 | 17 | 4629.14 | 31 | 4629.12 |
| 4 | 4629.87 | 18 | 4629.86 | 18 | 4629.19 | 32 | 4629.17 |
| 5 | 4629.95 | 19 | 4629.92 | 19 | 4629.25 | 33 | 4629.23 |
| 6 | 4630.01 | 20 | 4629.99 | 20 | 4629.30 | 34 | 4629.28 |
| 7 | 4630.07 | 21 | 4630.06 | 21 | 4629.35 | 35 | 4629.33 |

NOTE:
FOR ANCHOR BOLT LOCATIONS SEE SHEET 10

PIERS NO.1 & NO.2

SHEET 9 OF 13 SHEETS

UTAH STATE ROAD COMMISSION
SALT LAKE CITY, UTAH
BRIDGE DEPARTMENT

LEHI - 3RD WEST OVERPASS
155'-7 1/8" O. TO O. 47° XING L
STA. 75+46.06 I-15-6 (10) TOG (12 CONTR.)
LEHI-PROVO UTAH COUNTY

DESIGNED BY A.K. SCALE AS NOTED
DRAWN BY T.Q. ISSUED Oct. 23, 1962
TRACED BY SUBMITTED D.C. Saaguet
CHECKED BY K.Y. BRIDGE ENGINEER

BR. PR. DWG. NO. C-342

STRUCTURE 1-02

REGISTERED PROFESSIONAL ENGINEER NO. 2164 J. R. NEWVILLE STATE OF UTAH

DESIGN AND DRAWING BY
WESTERN ENGINEERS, INC. AND
EDWARDS AND KELCEY
CONSULTING ENGINEERS

SUBMITTED BY J. R. Newville CHIEF ENGINEER
UTAH ENGR. LIC. NO. 2164

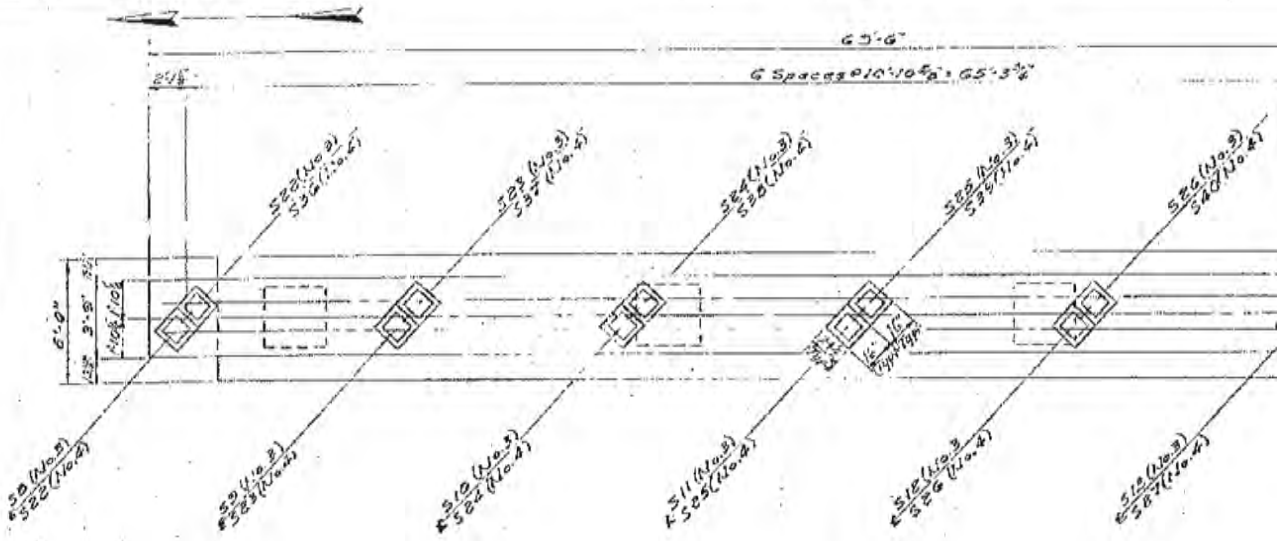


**PLAN-PIER NO. 3 & NO. 4**
SCALE: 1/4" = 1'-0"

NOTE:
REINFORCEMENT FOR PIERS NO. 3 & 4
SIMILAR TO PIERS NO. 1 & 2 EXCEPT AS NOTED.

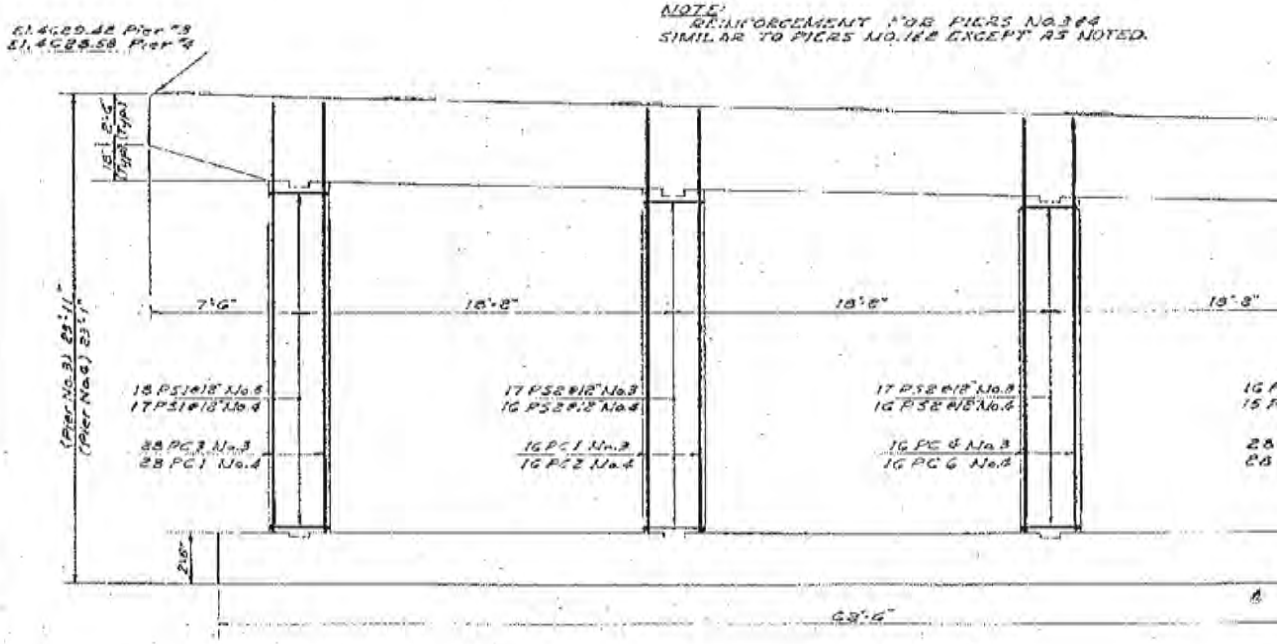


**ELEVATION-PIER NO. 3 & NO. 4**
SCALE: 1/4" = 1'-0"

**FOR INFORMATION ONLY**

DGN Files: IP_PierDetail15672A4433.C-342-18_ForumFoundation
02-MAY-2025

| FED. ROAD DIST. NO. | STATE | FED. AID PROJ. NO. | FISCAL YEAR | SHEET NO. | TOTAL SHEETS |
|---|---|---|---|---|---|
| 8 | UTAH | | | 14 | |

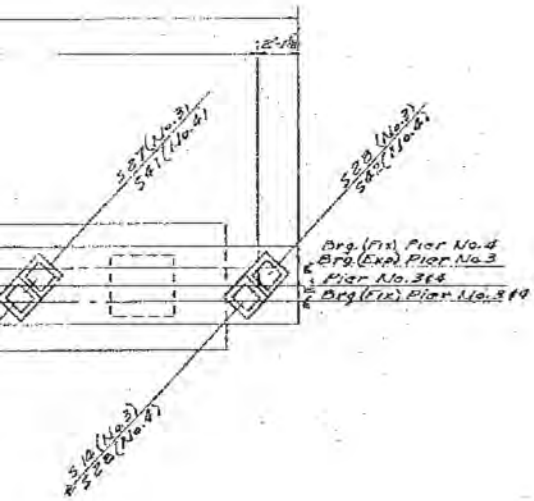


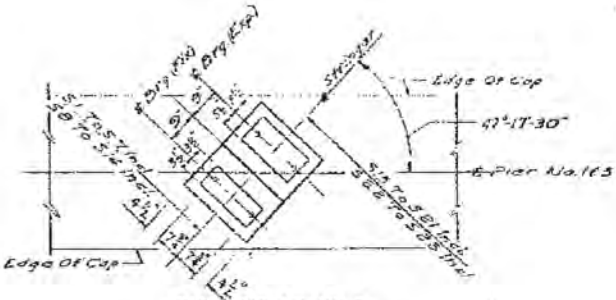


PIER NO. 1 & NO. 3

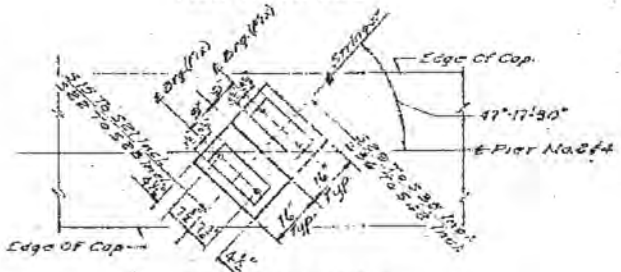


PIER NO. 2 & NO. 4

## ANCHOR BOLT LOCATION PLAN

SCALE: 1/2" = 1'-0"

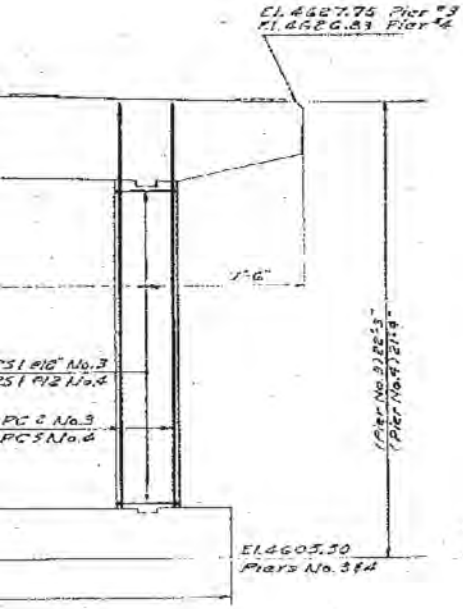


| STR. NO. | ELEVATION PIER NO. 3 | STR. NO. | ELEVATION PIER NO. 3 | STR. NO. | ELEVATION PIER NO. 4 | STR. NO. | ELEVATION PIER NO. 4 |
|---|---|---|---|---|---|---|---|
| 8 | 4629.67 | 22 | 4629.65 | 22 | 4628.89 | 36 | 4628.81 |
| 9 | 4629.41 | 23 | 4629.39 | 23 | 4628.61 | 37 | 4628.59 |
| 10 | 4629.14 | 24 | 4629.12 | 24 | 4628.33 | 38 | 4628.30 |
| 11 | 4628.87 | 25 | 4628.85 | 25 | 4628.04 | 39 | 4628.02 |
| 12 | 4628.60 | 26 | 4628.58 | 26 | 4627.75 | 40 | 4627.73 |
| 13 | 4628.32 | 27 | 4628.30 | 27 | 4627.46 | 41 | 4627.44 |
| 14 | 4628.05 | 28 | 4628.03 | 28 | 4627.17 | 42 | 4627.15 |

## PIERS NO. 3 & NO. 4

SHEET 10 OF 13 SHEETS

UTAH STATE ROAD COMMISSION
SALT LAKE CITY, UTAH
BRIDGE DEPARTMENT

LEHI 3RD WEST OVERPASS
(55'-7 1/8" O.TO O, 47° XING ℄
STA. 75+48.06 I-15-6 (9)226 1'0 OVERH.
LEHI-PROVO UTAH COUNTY

DESIGNED BY BK SCALE AS NOTED
DRAWN BY T.Q. DATE Oct. 22, 1969
TRACED BY APPROVED D.E. Sargent
CHECKED BY KY BRIDGE ENGINEER
BR. No. C-342
STRUCTURE 1-02

REGISTERED PROFESSIONAL ENGINEER NO. 2164 E. R. NOWZILE STATE OF UTAH

DESIGN AND DRAWING BY
WESTERN ENGINEERS, INC. AND
EDWARDS AND KELCEY
CONSULTING ENGINEERS

SUBMITTED BY [signature] CHIEF ENGINEER
UTAH REGD. LIC. NO. 2164

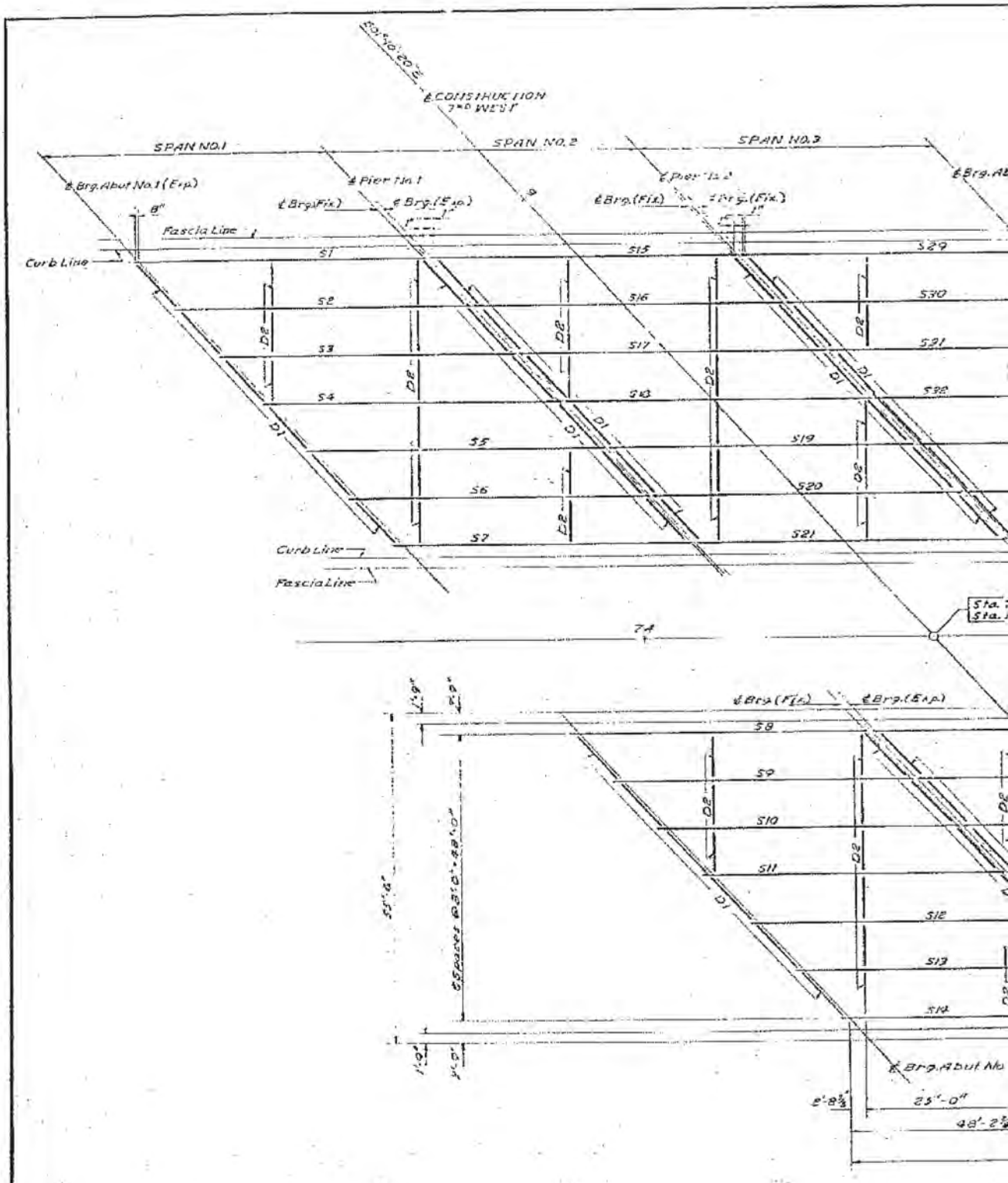


**FOR INFORMATION ONLY**

15

| FED. ROAD DIST. NO | STATE | FED. AID PROJ. NO. | FISCAL YEAR | SHEET NO. | TOTAL SHEETS |
|---|---|---|---|---|---|
| UT | UTAH | | | | |

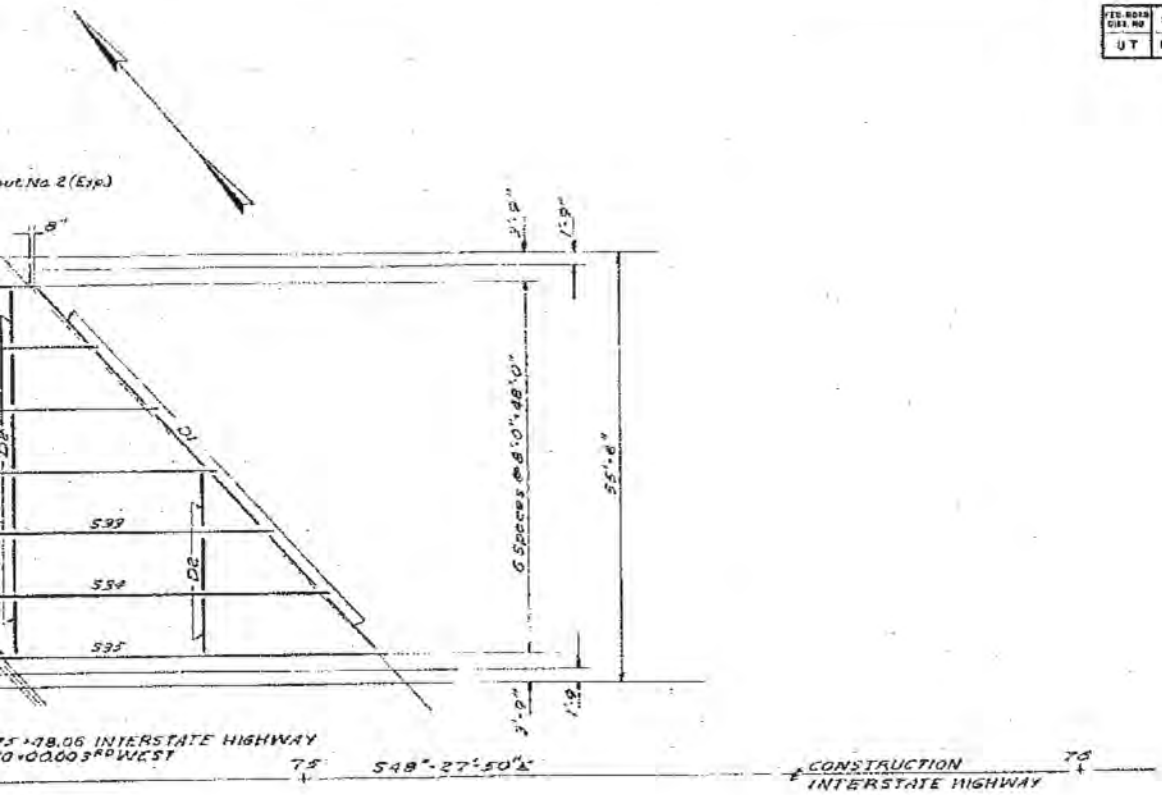


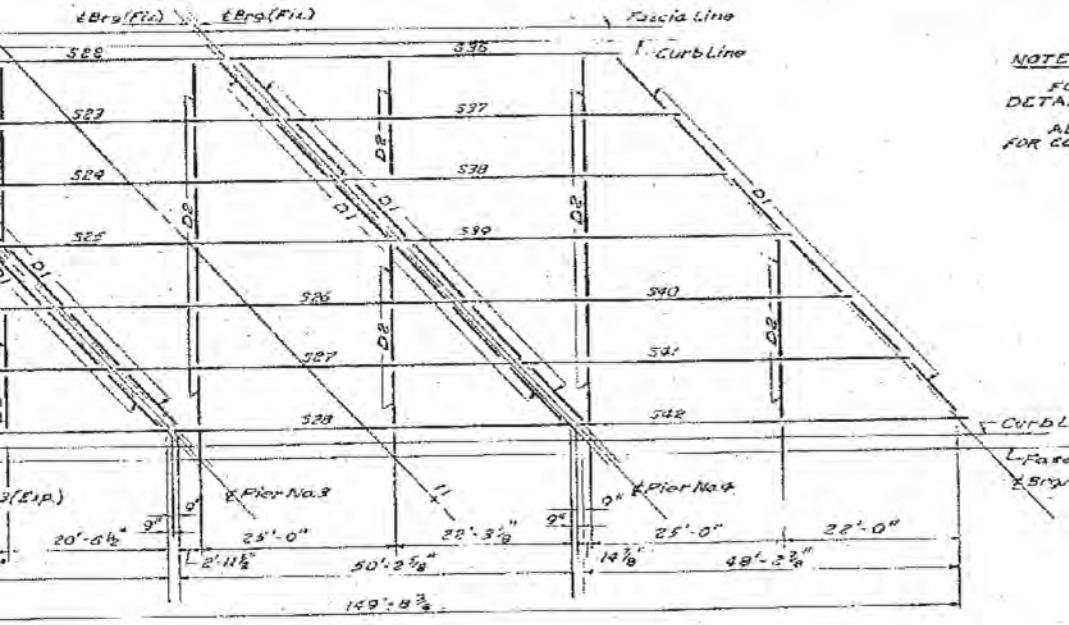


NOTES:

FOR BEARING AND DIAPHRAGM DETAILS SEE SHEET 15

ALL STRINGERS - 30 WF 108
FOR COV. PL'S SEE SHEET 13

FRAMING PLAN

FRAMING PLAN
SCALE: 3/32" = 1'-0"

REGISTERED PROFESSIONAL ENGINEER
NO. 2164
J. R. NEWVILLE
STATE OF UTAH

DESIGN AND DRAWING BY
WESTERN ENGINEERS, INC. AND
EDWARDS AND KELCEY
CONSULTING ENGINEERS

SUBMITTED BY: J. R. Newville, CHIEF ENGINEER
UTAH ENGR. LIC. NO. 2164

SHEET 11 OF 19 SHEETS

UTAH STATE ROAD COMMISSION
SALT LAKE CITY, UTAH
BRIDGE DEPARTMENT

LEHI 3RD WEST
OVERPASS

155'-7⅛" O. TO O. 47° XING L
STA. 75+48.06 I-15-6 (19) 276 EST. CONTR.
LEHI - PROVO UTAH COUNTY

DESIGNED BY J.L.B. SCALE AS NOTED
DRAWN BY T.M. ISSUED Oct. 27 1962
TRACED BY APPROVED D.L. Sargent, CHIEF BRIDGE ENGINEER
CHECKED BY J.L.B. 1961

No. C-342

STRUCTURE 4-02

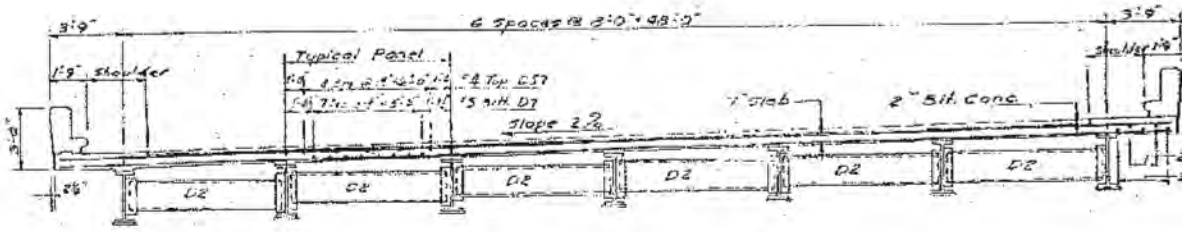


**TRANSVERSE SECTION**

SCALE: 1/4" = 1'-0"

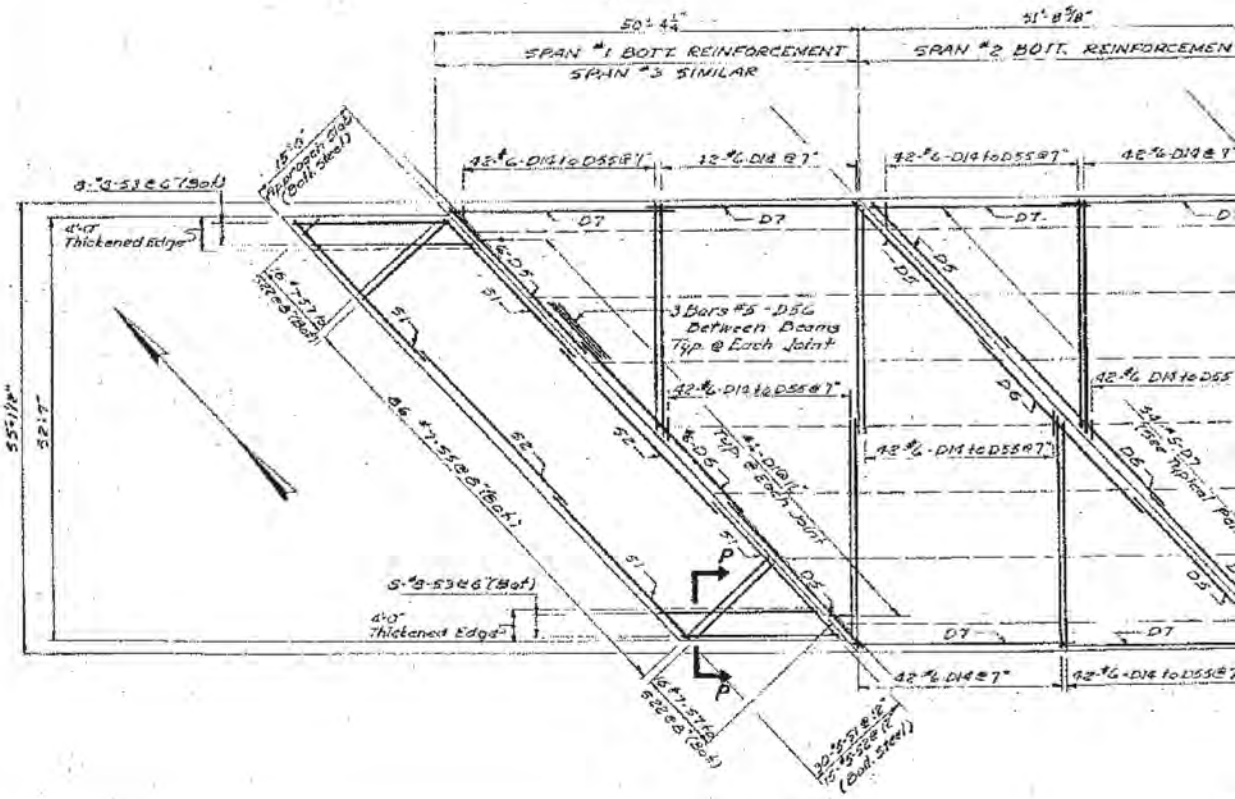


**FOR INFORMATION ONLY**

16

| FED. ROAD DIST. NO. | STATE | FED. AID PROJ. NO. | FISCAL YEAR | SHEET NO. | TOTAL SHEETS |
|---|---|---|---|---|---|
| UT | UTAH | | | | |

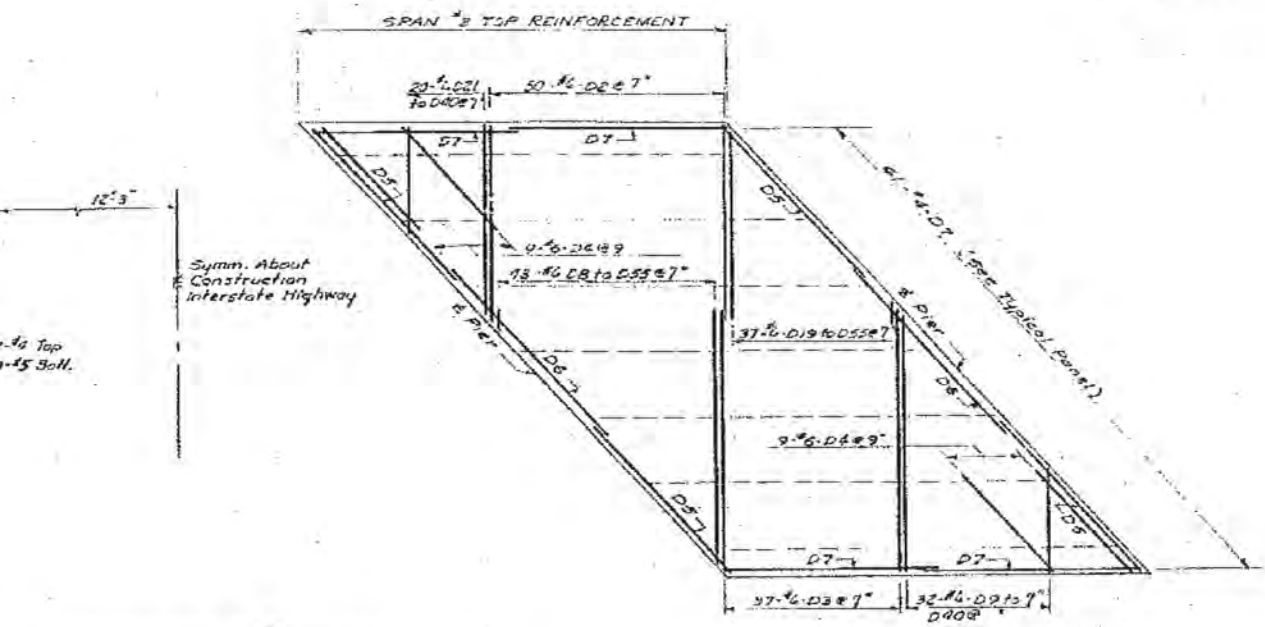


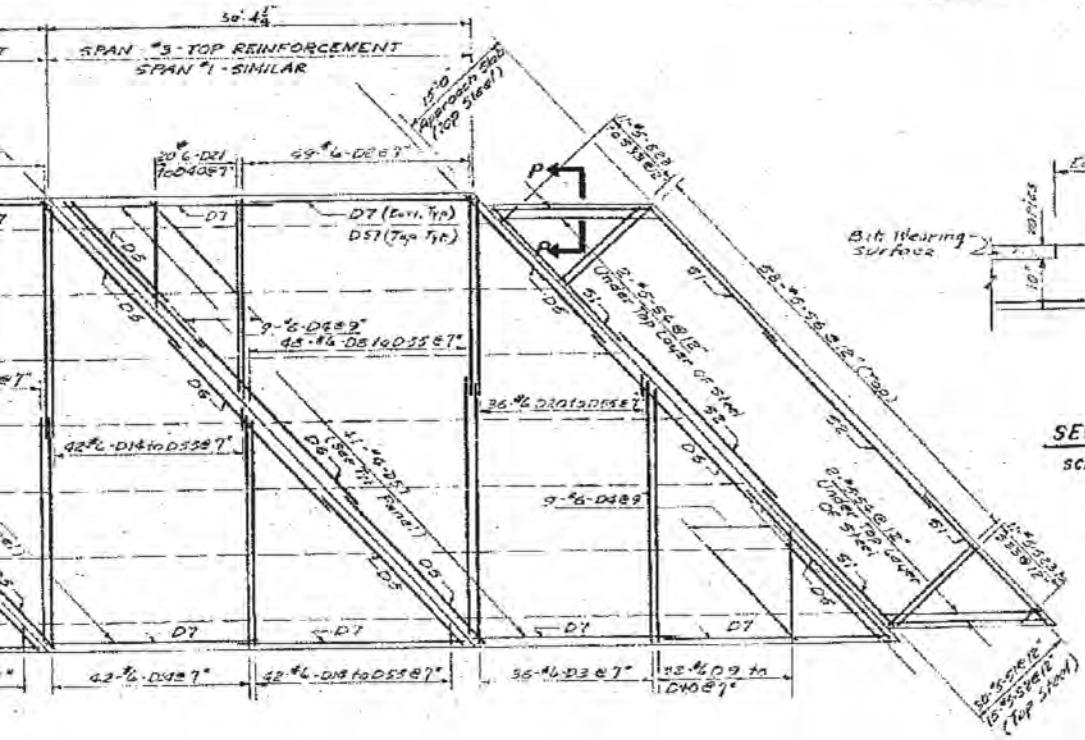


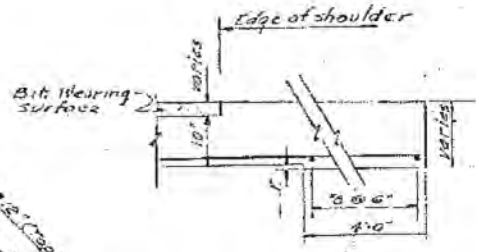


**SECTION P-P**

SCALE: 3/4"=1'-0"

NOTES:
FOR CURB & PARAPET REINF. SEE DRG NO. S7-1
FOR DIAPHRAGM DETAILS SEE SHEET 14

**TRANSVERSE SECTION**

**DECK REINFORCING PLAN**

SCALE: 1"=10'-0"

SHEET 12 OF 19 SHEETS

UTAH STATE ROAD COMMISSION
SALT LAKE CITY, UTAH
BRIDGE DEPARTMENT

LEHI 3RD WEST OVERPASS
155'-7 1/8" O. TO O. 47° XING ∠
STA. 75+46.06 I-15-6 (9) 7TH NORTH
LEHI-PROVO UTAH COUNTY

DESIGNED BY J.C.M. SCALE AS NOTED
DRAWN BY K. DATE Oct. 29, 1962
TRACED BY APPROVED D.L. Sargent
CHECKED BY J.E.D. CHIEF BRIDGE ENGINEER
BR. No. DWG. No. C-342

STRUCTURE 1-02

REGISTERED PROFESSIONAL ENGINEER NO. 2164 J. E. DERRIDDLE STATE OF UTAH

DESIGN AND DRAWING BY
WESTERN ENGINEERS, INC. AND
EDWARDS AND KELCEY
CONSULTING ENGINEERS

SUBMITTED BY J. E. Derriddle LEAD ENGINEER
UTAH ENGR. LIC. NO. 2164

**FOR INFORMATION ONLY**

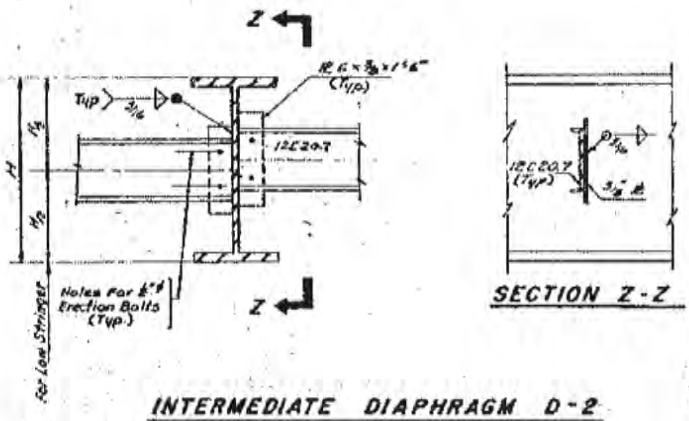


INTERMEDIATE DIAPHRAGM D-2

SCALE: 3/4" = 1'-0"

NOTE:
See sheet SS-3 for bearing plate details. Use Type "A" bearings for both fixed and expansion bearings.

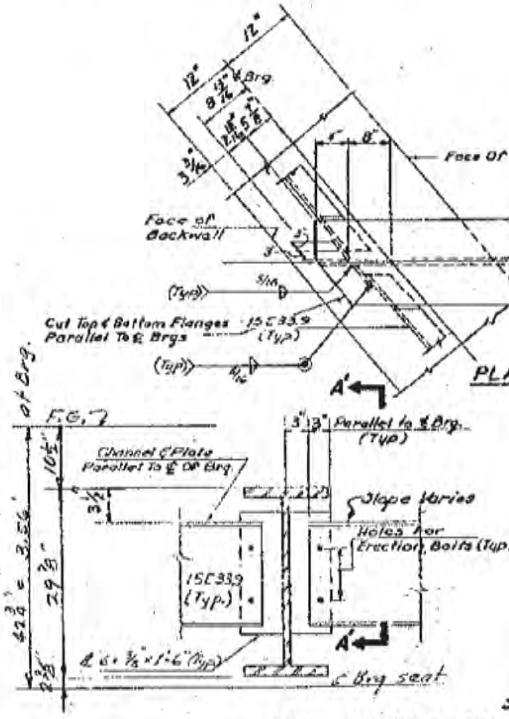


END DIAPHRAGM

SCALE: 3/4" = 1'-0"

| FED. ROAD DIST. NO. | STATE | FED. AID PROJ. NO. | FISCAL YEAR | SHEET NO. | TOTAL SHEETS |
|---|---|---|---|---|---|
| U 7 | UTAH | | | | |

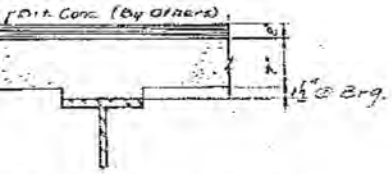


PICAL HAUNCH DETAIL
NOT TO SCALE

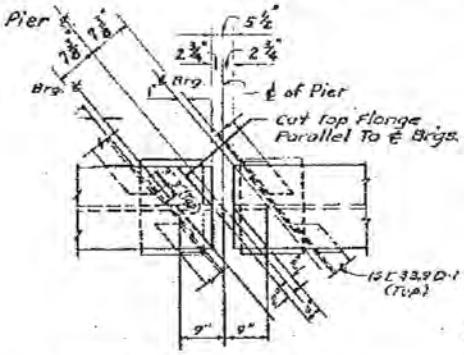


DETAILS OF STRINGERS AT PIERS
NOT TO SCALE

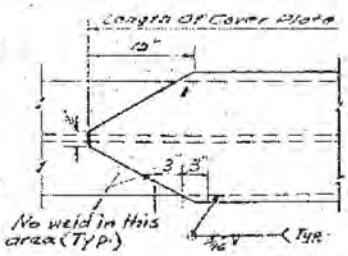


COVER PLATE DETAILS
NOT TO SCALE

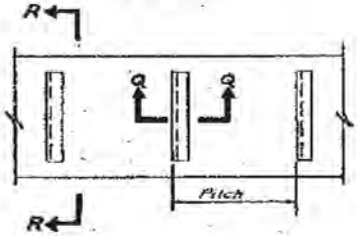


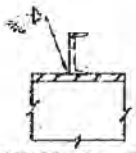

SECTION Q - Q

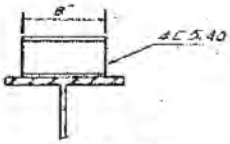


SECTION R - R

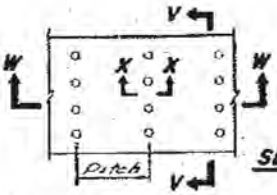


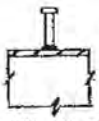

SECTION X-X

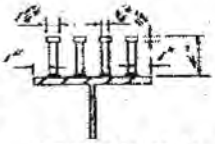

SECTION V-V

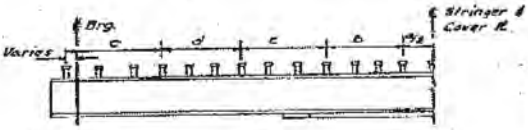


SECTION W-W

SHEAR CONNECTOR DETAILS
NOT TO SCALE

| EQUIVALENT SHEAR CONNECTOR CAPACITY | |
|---|---|
| Connector | Capacity |
| 4×¾φ Studs × 4" | 10.17" |
| 3-¾φ Studs × 6" | 10.38" |
| 4 3.5φ × 0'-8" | 10.40" |

Abutment

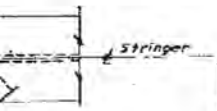


AN

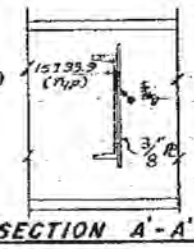


SECTION A'-A'

D-1

STRINGER SCHEDULE

| Stringer Number | Section | Cover ℞ | Stud Pitch e | d | c | b | a | Beam Camber (Point Of Max. Camber) Dead Load | Profile | Total |
|---|---|---|---|---|---|---|---|---|---|---|
| S-1 To S-14 S-29 To S-42 | 30 WF 108 | 12"×⅝"×33'-0" | 12@5" = 5'-0" | 10@6" = 5'-0" | 11@8" = 7'-4" | 5@10" = 4'-2" | 6@12" = 6'-0" | ⅞" | ⅛" | 1" |
| S-15, S-21, S-22, S-28 | 30 WF 108 | 12"×⅝"×35'-0" | 12@5" = 5'-0" | 13@6" = 5'-0" | 9@8" = 6'-0" | 4@10" = 3'-4" | 12@12" = 12'-0" | 1" | ⅛" | 1⅛" |
| S-16 To S-20 S-23 To S-27 | 30 WF 108 | 12"×⅜"×36'-0" | 11@5" = 7'-1" | 10@6" = 5'-0" | 8@8" = 5'-4" | 5@10" = 4'-2" | 8@12" = 8'-0" | 1" | ⅛" | 1⅛" |

SHEAR CONNECTOR NOTE:
PAYMENT IS BASED ON THE WEIGHT OF 4-¾φ STUD CONNECTORS. EQUIVALENT CONNECTORS AS INDICATED IN THE TABLE ABOVE MAY BE USED AT THE SAME SPACING.

DIAPHRAGM CONNECTION NOTE:
⅞φ HIGH TENSION BOLTS MAY BE SUBSTITUTED PROVIDED THAT THE CONNECTION BE MADE EQUIVALENT IN STRENGTH TO THE WELDED CONNECTION SHOWN. SHOP DRAWINGS MUST INDICATE THE TYPE OF CONNECTION SELECTED.

STEEL DETAILS

SHEET 19 OF 19 SHEETS

UTAH STATE ROAD COMMISSION
SALT LAKE CITY, UTAH
BRIDGE DEPARTMENT

LEHI 3RD WEST OVERPASS
155'-7⅛" O. TO O. 47° XING ∠
STA. 75+48.06 T-15-8 (91) 116 W. 2 CONTR.
LEHI - PROVO UTAH COUNTY

DESIGNED BY J.E.B. SCALE AS NOTED
DRAWN BY J.E.B. DATE Oct. 21, 1962
TRACED BY S.E.B. APPROVED D.L. Sargent
CHECKED BY S.E.B. CHIEF BRIDGE ENGINEER

No. No. No. C-342

STRUCTURE, 1-D2

DESIGN AND DRAWING BY
WESTERN ENGINEERS, INC. AND
EDWARDS AND KELCEY
CONSULTING ENGINEERS

SUBMITTED BY [signature] CHIEF ENGINEER
UTAH ENGR. LIC. NO. 2167

REGISTERED PROFESSIONAL ENGINEER NO. 2164 J. R. REAVILLE STATE OF UTAH

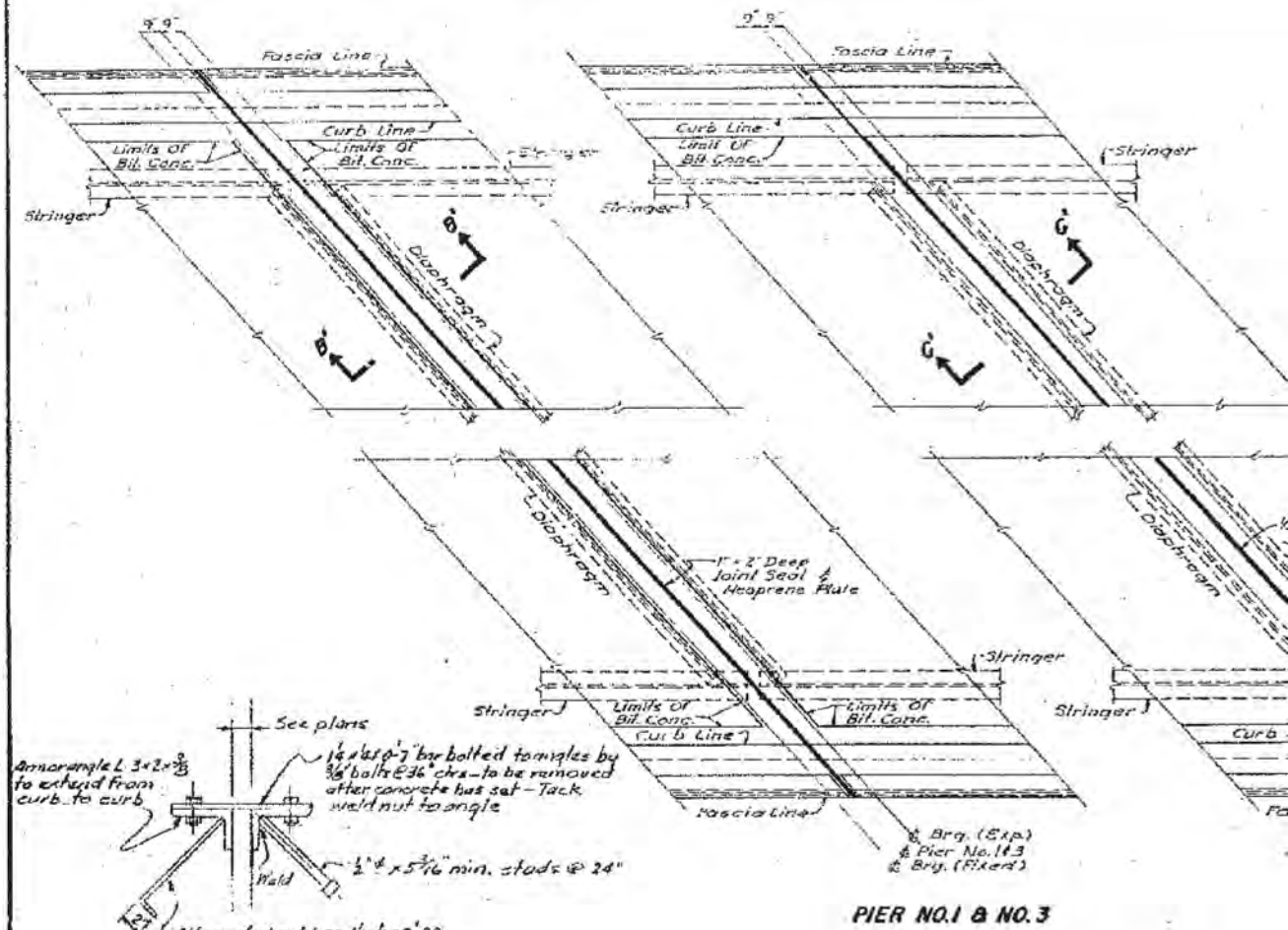


PIER NO.1 & NO.3

TRANSVERSE ROADWAY

SCALE: 3/8" = 1'-0"

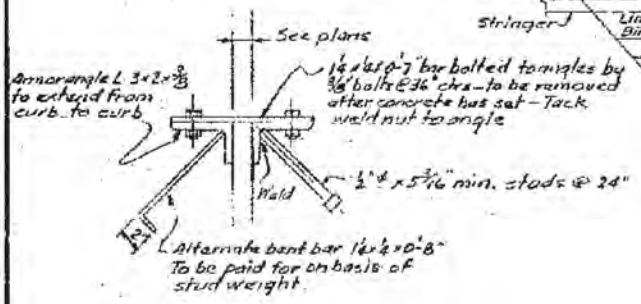


ARMOR ANGLE DETAIL

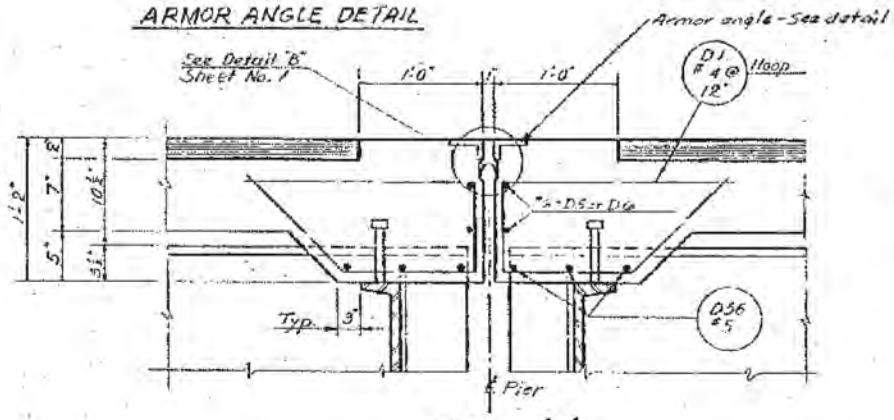


SECTION B'-B'

SCALE: 1 1/2" = 1'-0"

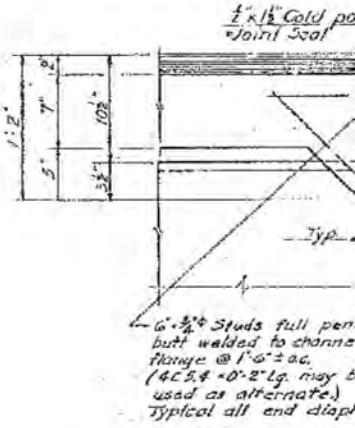


**FOR INFORMATION ONLY**

DGN Files 18-PW\Phase1\672\4433\C-042-4 for information

BS-HWY-2685

| FED. ROAD DIST. NO. | STATE | FED. RD. PROJ. NO. | FISCAL YEAR | SHEET NO. | TOTAL SHEETS |
|---|---|---|---|---|---|
| UT | UTAH | | | | |

18

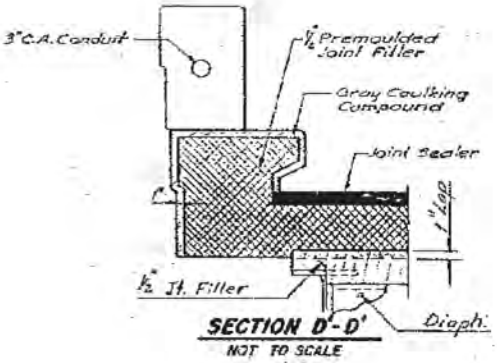


**SECTION D'-D'**
NOT TO SCALE

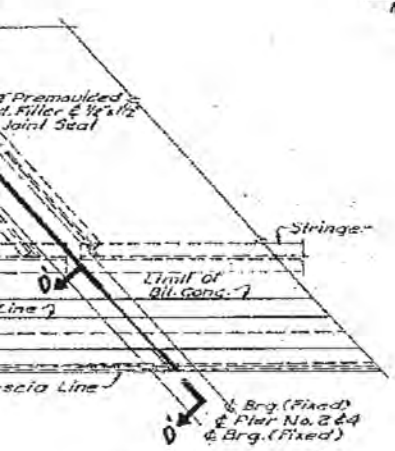


**PIER NO. 2 & NO. 4**

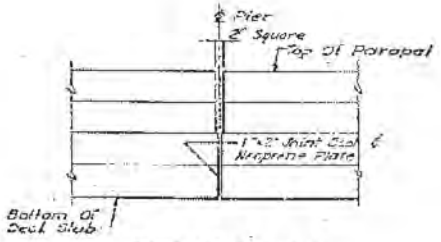


**PIER NO. 1 & NO. 3**

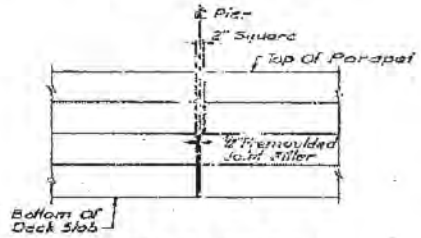


**PIER NO. 2 & NO. 4**

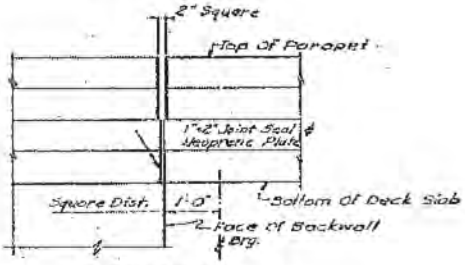


**ABUTMENTS**

**JOINT FILLER DETAILS AT PARAPETS**
SCALE: ½" = 1'-0"

**JOINTS**

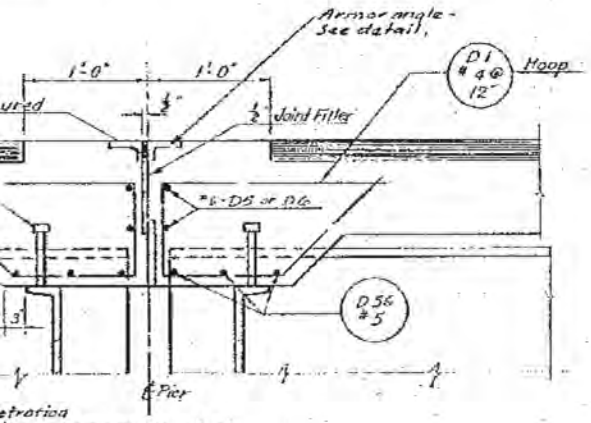


**SECTION C'-C'**
SCALE: 1½" = 1'-0"

**CONCRETE DETAILS**

SHEET 14 OF 19 SHEETS

UTAH STATE ROAD COMMISSION
SALT LAKE CITY, UTAH
BRIDGE DEPARTMENT

LEHI 3RD WEST OVERPASS
155'-7⅛" O. TO O. 47° XING ℄
STA. 75+48.06
LEHI - PROVO
2-15-6 (13) 126 1st CONTR.
UTAH COUNTY

DESIGNED BY J.L.B. SCALE AS NOTED
DRAWN BY J.L.B. DATE Oct. 23, 1962
TRACED BY APPROVED D.L. Sargent
CHECKED BY J.L.B. CHIEF BRIDGE ENGINEER

NO. SHEET NO. C-342

STRUCTURE 8-D2

REGISTERED PROFESSIONAL ENGINEER NO. 2164 J. R. NEWVILLE STATE OF UTAH

DESIGN AND DRAWING BY
WESTERN ENGINEERS, INC. AND
EDWARDS AND KELCEY
CONSULTING ENGINEERS

SUBMITTED BY J. R. Newville CHIEF ENGINEER
UTAH ENGR. LIC. NO. 2164

# BILL OF REINFORCING

| MARK | SIZE | LGTH. | NO. REQ. | TOTAL LENGTH | TYPE | A | B | C | D | E | F | G | H | J | K | O |
|---|---|---|---|---|---|---|---|---|---|---|---|---|---|---|---|---|
| ABUTMENTS AND WINGWALLS | | | | | | | | | | | | | | | | |
| AD-1 | 5 | 4'-8" | 200 | 933'-0" | 4 | | 1'-0" | 3'-8" | | | | | | | | |
| 2 | 4 | 2'-0" | 144 | 288'-0" | 1 | | | | | | | | | | | |
| 3 | 5 | 2'-0" | 308 | 616'-0" | 1 | | | | | | | | | | | |
| 4 | 6 | 4'-8" | 88 | 410'-8" | 4 | | 1'-0" | 3'-8" | | | | | | | | |
| AF-1 | 5 | 5'-0" | 584 | 2920'-0" | 1 | | | | | | | | | | | |
| 2 | | 3'-6" | 8 | 28'-0" | | | | | | | | | | | | |
| 3 | | 2'-0" | 8 | 16'-0" | | | | | | | | | | | | |
| 4 | | 27'-0" | 120 | 3240'-0" | | | | | | | | | | | | |
| 5 | | 11'-6" | 14 | 161'-0" | | | | | | | | | | | | |
| 6 | | 19'-6" | 10 | 195'-0" | | | | | | | | | | | | |
| 7 | | 22'-6" | 10 | 225'-0" | | | | | | | | | | | | |
| 8 | | 5'-0" | 16 | 80'-0" | | | | | | | | | | | | |
| 9 | | 18'-0" | 7 | 126'-0" | | | | | | | | | | | | |
| 10 | | 15'-0" | 7 | 105'-0" | | | | | | | | | | | | |
| 11 | | 15'-8" | 20 | 310'-0" | | | | | | | | | | | | |
| 12 | | 22'-0" | 3 | 66'-0" | | | | | | | | | | | | |
| 13 | | 19'-0" | 3 | 57'-0" | | | | | | | | | | | | |
| 14 | 5 | 15'-0" | 6 | 90'-0" | 1 | | | | | | | | | | | |
| AS-1 | 5 | 20'-6" | 12 | 246'-0" | 20 | | 19'-0" | 1'-6" | 1 | 1 | | | | | | |
| 2 | | 32'-3" | 56 | 1806'-0" | 1 | | | | | | | | | | | |
| 3 | | 23'-6" | 12 | 282'-0" | 6 | | 22'-0" | 1'-6" | 1 | 1 | | | | | | |
| 4 | | 17'-8" | 16 | 280'-0" | 1 | | | | | | | | | | | |
| 5 | | 21'-6" | 16 | 344'-0" | | | | | | | | | | | | |
| 6 | | 5'-3" | 50 | 267'-6" | | | | | | | | | | | | |
| 7 | | 7'-3" | 26 | 188'-6" | | | | | | | | | | | | |
| 8 | | 6'-0" | 15 | 90'-0" | | | | | | | | | | | | |
| 9 | | 7'-9" | 35 | 271'-3" | | | | | | | | | | | | |
| 10 | | 6'-3" | 22 | 137'-6" | | | | | | | | | | | | |
| 11 | | 8'-8" | 15 | 127'-8" | | | | | | | | | | | | |
| 12 | 8 | 6'-2" | 37 | 249'-8" | | | | | | | | | | | | |
| 13 | 6 | 20'-0" | 8 | 160'-0" | | | | | | | | | | | | |
| 14 | 5 | 4'-0" | 222 | 888'-0" | | | | | | | | | | | | |
| 15 | 5 | 19'-9" | 28 | 553'-0" | 1 | | | | | | | | | | | |
| 16 | 6 | 19'-9" | 12 | 237'-0" | | | | | | | | | | | | |
| 17 | 5 | 21'-6" | 12 | 258'-0" | 1 | | | | | | | | | | | |
| 18 | 5 | 4'-8" | 296 | 1332'-0" | 4 | | 1'-6" | 3'-0" | | | | | | | | |
| 19 | 6 | 21'-0" | 4 | 84'-0" | 1 | | | | | | | | | | | |
| 20 | 5 | 4'-3" | 36 | 153'-0" | | | | | | | | | | | | |
| 21 | 5 | 4'-9" | 28 | 133'-0" | | | | | | | | | | | | |
| 22 | 5 | 6'-3" | 14 | 87'-6" | | | | | | | | | | | | |
| 23 | 5 | 5'-6" | 22 | 121'-0" | | | | | | | | | | | | |
| 24 | 6 | 32'-3" | 12 | 387'-0" | | | | | | | | | | | | |
| 25 | 5 | 3'-3" | 50 | 162'-6" | | | | | | | | | | | | |
| 26 | 5 | 20'-9" | 16 | 332'-0" | | | | | | | | | | | | |
| 27 | 3 | 3'-0" | 20 | 60'-0" | | | | | | | | | | | | |
| 28 | 5 | 6'-0" | 20 | 120'-0" | | | | | | | | | | | | |
| 29 | 5 | 4'-6" | 14 | 63'-0" | | | | | | | | | | | | |
| 30 | 5 | 3'-6" | 14 | 49'-0" | 1 | | | | | | | | | | | |
| AW-1 | 5 | 19'-3" | 10 | 192'-6" | 1 | | | | | | | | | | | |
| 2 | 6 | 6'-0" | 12 | 96'-0" | | | | | | | | | | | | |
| 3 | 5 | 20'-9" | 4 | 83'-0" | | | | | | | | | | | | |
| 4 | | 22'-0" | 4 | 88'-0" | | | | | | | | | | | | |
| 5 | | 9'-3" | 13 | 120'-3" | | | | | | | | | | | | |
| 6 | | 11'-0" | 14 | 154'-0" | | | | | | | | | | | | |
| 7 | | 4'-9" | 2 | 9'-6" | | | | | | | | | | | | |
| 8 | 5 | 6'-6" | 2 | 13'-0" | | | | | | | | | | | | |
| 9 | 6 | 9'-9" | 11 | 107'-3" | 1 | | | | | | | | | | | |
| 10 | 5 | 19'-8" | 3 | 58'-6" | 20 | | 18'-0" | 1'-6" | 1 | 1 | | | | | | |
| 11 | | 21'-0" | 3 | 63'-0" | 6 | | 19'-6" | 1'-6" | 1 | 1 | | | | | | |
| 12 | | 16'-0" | 4 | 64'-0" | 1 | | | | | | | | | | | |
| 13 | 5 | 19'-0" | 4 | 76'-0" | | | | | | | | | | | | |
| 14 | 6 | 9'-3" | 13 | 120'-3" | | | | | | | | | | | | |
| 15 | 6 | 11'-0" | 14 | 154'-0" | | | | | | | | | | | | |
| 16 | 6 | 6'-0" | 16 | 96'-0" | | | | | | | | | | | | |
| 17 | 5 | 12'-3" | 12 | 147'-0" | | | | | | | | | | | | |
| 18 | | 16'-0" | 4 | 64'-0" | | | | | | | | | | | | |
| 19 | | 13'-9" | 8 | 110'-0" | | | | | | | | | | | | |
| 20 | | 15'-3" | 8 | 122'-0" | | | | | | | | | | | | |
| 21 | | 8'-9" | 10 | 87'-6" | | | | | | | | | | | | |
| 22 | | 7'-9" | 9 | 69'-9" | | | | | | | | | | | | |
| 23 | | 9'-3" | 9 | 83'-3" | | | | | | | | | | | | |
| 24 | | 7'-6" | 10 | 75'-0" | | | | | | | | | | | | |
| 25 | | 4'-3" | 2 | 8'-6" | | | | | | | | | | | | |
| 26 | | 3'-3" | 2 | 6'-6" | | | | | | | | | | | | |
| 27 | 5 | 4'-9" | 2 | 9'-6" | 1 | | | | | | | | | | | |

| MARK | SIZE | LGTH. | NO. REQ. | TOTAL LENGTH | TYPE | A | B | C | D | E |
|---|---|---|---|---|---|---|---|---|---|---|
| AW-28 | 5 | 3'-3" | 2 | 6'-6" | 1 | | | | | |
| 29 | | 15'-0" | 6 | 78'-0" | 20 | | 11'-6" | 1'-6" | 1 | 1 |
| 30 | | 14'-6" | 6 | 87'-0" | 6 | | 13'-0" | 1'-6" | 1 | 1 |
| 31 | | 9'-0" | 8 | 72'-0" | 1 | | | | | |
| 32 | 5 | 12'-0" | 8 | 96'-0" | 1 | | | | | |
| 33 | 6 | 8'-9" | 10 | 87'-6" | 1 | | | | | |
| 34 | 6 | 7'-9" | 9 | 69'-9" | 1 | | | | | |
| 35 | 6 | 9'-3" | 9 | 83'-3" | 1 | | | | | |
| 36 | 6 | 7'-6" | 10 | 75'-0" | 1 | | | | | |
| 37 | 5 | 16'-0" | 6 | 96'-0" | 1 | | | | | |
| 38 | | 12'-0" | 4 | 48'-0" | 1 | | | | | |
| 39 | | 17'-9" | 4 | 71'-0" | 1 | | | | | |
| 40 | | 8'-0" | 12 | 96'-0" | 1 | | | | | |
| 41 | | 9'-9" | 11 | 107'-3" | 1 | | | | | |
| 42 | | 3'-9" | 2 | 7'-6" | 1 | | | | | |
| 43 | | 5'-3" | 2 | 10'-6" | 1 | | | | | |
| 44 | | 17'-0" | 3 | 51'-0" | 20 | | 15'-6" | 1'-6" | 1 | 1 |
| 45 | 5 | 18'-6" | 3 | 55'-6" | 6 | | 17'-0" | 1'-6" | 1 | 1 |
| CURB AND PARAPET | | | | | | | | | | |
| DC-1 | 5 | 8'-1½" | 496 | 4030'-0" | 21 | 8 | 2'-10½" | 2'-7" | 1'-0" | 1'-0" |
| 2 | 5 | 3'-1" | 594 | 1831'-6" | 22 | 1'-4½" | 1'-8½" | | | |
| 3 | 5 | 6'-0" | 98 | 588'-0" | 23 | | 2'-10" | 8" | 2'-6" | |
| 4 | | | | | | | | | | |
| 5 | 4 | 25'-5" | 144 | 3672'-0" | 1 | | | | | |
| 6 | | 26'-3" | 72 | 1890'-0" | | | | | | |
| 7 | | 19'-1" | 9 | 172'-8" | | | | | | |
| 8 | | 16'-3" | 9 | 146'-3" | | | | | | |
| 9 | | 12'-3" | 18 | 220'-6" | | | | | | |
| 10 | | 18'-4" | 9 | 165'-6" | | | | | | |
| 11 | | 15'-4" | 9 | 138'-6" | | | | | | |
| 12 | 4 | 11'-6" | 18 | 207'-0" | 1 | | | | | |
| PIERS | | | | | | | | | | |
| PF-1 | 6 | 23'-0" | 80 | 1840'-0" | 1 | | | | | |
| 2 | 10 | 32'-9" | 80 | 2620'-0" | 1 | | | | | |
| 3 | 6 | 5'-9" | 344 | 1976'-0" | 1 | | | | | |
| 4 | 8 | 20'-0" | 40 | 800'-0" | 1 | | | | | |
| PD-1 | 9 | 6'-0" | 352 | 2112'-0" | 4 | | 1'-0" | 5'-0" | | |
| PC-1 | 9 | 20'-3" | 132 | 2673'-0" | 1 | | | | | |
| 2 | | 19'-7" | 132 | 2585'-0" | | | | | | |
| 3 | | 21'-0" | 28 | 588'-0" | | | | | | |
| 4 | | 20'-0" | 16 | 320'-0" | | | | | | |
| 5 | | 18'-9" | 28 | 525'-0" | | | | | | |
| 6 | 9 | 19'-3" | 16 | 308'-0" | 1 | | | | | |
| PS-1 | 4 | 9'-4" | 264 | 2464'-0" | 12 | 5" | 2'-8" | 1'-7" | 2'-0" | 1'-7" |
| 2 | 4 | 10'-4" | 264 | 2728'-0" | 12 | 5" | 2'-8" | 2'-1" | 2'-8" | 2'-1" |
| 3 | 5 | 12'-4" | 280 | 3453'-4" | 12 | 5" | 2'-1" | 3'-8" | 2'-1" | 3'-8" |
| 4 | 5 | 11'-6" | 16 | 184'-0" | 12 | 5" | 2'-1" | 3'-3" | 2'-1" | 3'-3" |
| 5 | 5 | 10'-8" | 16 | 170'-8" | 12 | 5" | 2'-1" | 2'-10" | 2'-1" | 2'-10" |
| 6 | 5 | 10'-0" | 16 | 160'-0" | 12 | 5" | 2'-1" | 2'-6" | 2'-1" | 2'-0" |
| FB-1 | 8 | 20'-6" | 72 | 1476'-0" | 1 | | | | | |
| 2 | 8 | 12'-2" | 48 | 584'-0" | 24 | 1'-0" | 3'-0" | 6'-0" | 2'-2" | |
| 3 | 5 | 35'-6" | 32 | 1136'-0" | 1 | | | | | |
| 4 | 9 | 35'-6" | 48 | 1704'-0" | 1 | | | | | |
| 5 | 5 | 12'-4" | 32 | 394'-8" | 1 | | | | | |

REMARKS 00

DGN Files: IP PrePrint/15672A433.C-342-15.forminfoution
02-MAY-2025

## STEEL

| F | G | H | J | K | O |
|---|---|---|---|---|---|
| 1' | 1'-0" | | | | |
| 1' | 1'-0" | | | | |
| 1'-6" | | | | | |

| MARK | SIZE | LGTH. | NO. REQ. | TOTAL LENGTH | TYPE | A | B | C | D | E | F | G | H | J | K | O |
|---|---|---|---|---|---|---|---|---|---|---|---|---|---|---|---|---|
| | | DECK AND APPROACH SLAB | | | | | | | | | | | | | | |
| S-1 | 5 | 22'-0" | 240 | 5280'-0" | 1 | | | | | | | | | | | |
| 2 | 5 | 30'-0" | 120 | 3600'-0" | | | | | | | | | | | | |
| 3 | 6 | 19'-6" | 64 | 1248'-0" | | | | | | | | | | | | |
| 4 | 5 | 19'-6" | 16 | 312'-0" | | | | | | | | | | | | |
| 5 | 7 | 14'-6" | 344 | 4988'-0" | | | | | | | | | | | | |
| 6 | 5 | 14'-6" | 232 | 3364'-0" | | | | | | | | | | | | |
| 7 | 7 | 14' 0" | 8 | 112'-0" | | | | | | | | | | | | |
| 8 | | 13'-3" | | 106'-0" | | | | | | | | | | | | |
| 9 | | 12'-6" | | 100'-0" | | | | | | | | | | | | |
| 10 | | 11'-10" | | 94'-8" | | | | | | | | | | | | |
| 11 | | 11'-1" | | 88'-8" | | | | | | | | | | | | |
| 12 | | 10'-4" | | 82'-8" | | | | | | | | | | | | |
| 13 | | 9'-7" | | 76'-8" | | | | | | | | | | | | |
| 14 | | 8'-10" | | 70'-8" | | | | | | | | | | | | |
| 15 | | 8'-2" | | 65'-0" | | | | | | | | | | | | |
| 16 | | 7'-5" | | 59'-3" | | | | | | | | | | | | |
| 17 | | 6'-8" | | 53'-3" | | | | | | | | | | | | |
| 18 | | 5'-11" | | 47'-3" | | | | | | | | | | | | |
| 19 | | 5'-2" | | 41'-3" | | | | | | | | | | | | |
| 20 | | 4'-6" | | 36'-0" | | | | | | | | | | | | |
| 21 | | 3'-9" | | 30'-0" | | | | | | | | | | | | |
| 22 | 7 | 3'-0" | | 24'-0" | | | | | | | | | | | | |
| 23 | 5 | 13'-0" | | 104'-0" | | | | | | | | | | | | |
| 24 | | 12'-0" | | 96'-0" | | | | | | | | | | | | |
| 25 | | 11'-0" | | 88'-0" | | | | | | | | | | | | |
| 26 | | 10'-0" | | 80'-0" | | | | | | | | | | | | |
| 27 | | 9'-0" | | 72'-0" | | | | | | | | | | | | |
| 28 | | 8'-0" | | 64'-0" | | | | | | | | | | | | |
| 29 | | 7'-0" | | 56'-0" | | | | | | | | | | | | |
| 30 | | 6' 0" | | 48'-0" | | | | | | | | | | | | |
| 31 | | 5'-0" | | 40'-0" | | | | | | | | | | | | |
| 32 | | 4'-0" | | 32'-0" | | | | | | | | | | | | |
| 33 | 5 | 3' 0" | 8 | 29'-0" | 1 | | | | | | | | | | | |

| FED. ROAD DIST. NO. | STATE | FED. AID PROJ. NO. | FISCAL YEAR | SHEET NO. | TOTAL SHEETS |
|---|---|---|---|---|---|
| UT | UTAH | | | | |

## BAR TYPES

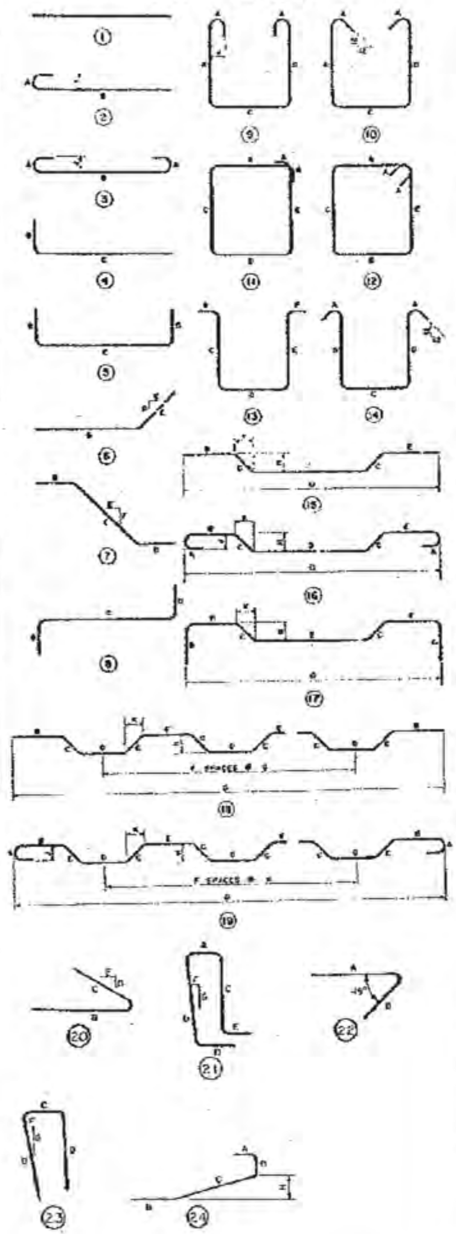

**FOR INFORMATION ONLY**

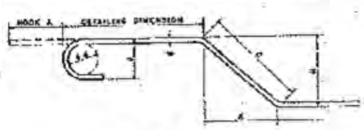

HOOK DETAIL

### GENERAL NOTES

1. All placing drawings, detailing, and fabrication shall be in accordance with the "Manual of Standard Practice for Detailing Reinforced Concrete Structures (ACI 315-57)".
2. All dimensions shown for bar bending details are out-to-out of bars.

DESIGN AND DRAWING BY
WESTERN ENGINEERS, INC. AND
EDWARDS AND KELCEY
CONSULTING ENGINEERS

SUBMITTED BY [signature] CHIEF ENGINEER
UTAH REG. LIC. NO. 2164

## REINFORCING SCHEDULE

SHEET 15 OF 19 SHEETS

UTAH STATE ROAD COMMISSION
SALT LAKE CITY, UTAH
BRIDGE DEPARTMENT

LEHI 3 RD. WEST
OVERPASS
155'-7 5/8" O. TO O. 47° XING ∠
STA. 75 + 48.06 I-15-6(9)26
LEHI - PROVO UTAH COUNTY

DESIGNED BY J.K. | SCALE
DRAWN BY T.E.M. | ISSUED Oct. 22, 1962
TRACED BY | APPROVED D.L. Sargent
CHECKED BY H.K.-N.K. | CHIEF BRIDGE ENGINEER

DWG. NO. C-342

STRUCTURE 1-02

# BILL OF REINFORCING

| MARK | SIZE | LGTH. | NO. REQ. | TOTAL LENGTH | TYPE | A | B | C | D | E | F | G | H | J | K | O |
|---|---|---|---|---|---|---|---|---|---|---|---|---|---|---|---|---|
| | | DECK | AND | APPROACH | | SLAB | | CONT. | | | | | | | | |
| D-1 | 4 | 5'-0" | 720 | 3600'-0" | 26 | 8" | 1'-1" | 1'-2" | 2'-1" | | | | | | | |
| 2 | 8 | 24'-6" | 296 | 7252'-0" | 1 | | | | | | | | | | | |
| 3 | 6 | 32'-6" | 216 | 7085'-0" | | | | | | | | | | | | |
| 4 | 6 | 16'-0" | 108 | 1728'-0" | | | | | | | | | | | | |
| 5 | 6 | 25'-0" | 48 | 1200'-0" | | | | | | | | | | | | |
| 6 | 6 | 27'-0" | 24 | 648'-0" | | | | | | | | | | | | |
| 7 | 5 | 26'-6" | 648 | 17172'-0" | | | | | | | | | | | | |
| 8 | 6 | 32'-0" | 6 | 192'-0" | | | | | | | | | | | | |
| 9 | 6 | 31'-7" | 12 | 379'-0" | | | | | | | | | | | | |
| 10 | | 30'-6" | 12 | 366'-0" | | | | | | | | | | | | |
| 11 | | 29'-11" | 12 | 359'-0" | | | | | | | | | | | | |
| 12 | | 29'-3" | 12 | 354'-0" | | | | | | | | | | | | |
| 13 | | 28'-6" | 12 | 344'-0" | | | | | | | | | | | | |
| 14 | | 28'-0" | 540 | 15120'-0" | | | | | | | | | | | | |
| 15 | | 27'-4" | 36 | 984'-0" | | | | | | | | | | | | |
| 16 | | 26'-9" | 36 | 963'-0" | | | | | | | | | | | | |
| 17 | | 26'-1" | 36 | 939'-0" | | | | | | | | | | | | |
| 18 | | 25'-8" | 36 | 924'-0" | | | | | | | | | | | | |
| 19 | | 24'-10" | 36 | 895'-8" | | | | | | | | | | | | |
| 20 | | 24'-3" | 42 | 1018'-6" | | | | | | | | | | | | |
| 21 | | 23'-7" | 48 | 1132'-0" | | | | | | | | | | | | |
| 22 | | 23'-0" | | 1104'-0" | | | | | | | | | | | | |
| 23 | | 22'-4" | | 1072'-0" | | | | | | | | | | | | |
| 24 | | 21'-8" | | 1040'-0" | | | | | | | | | | | | |
| 25 | | 21'-1" | | 1012'-0" | | | | | | | | | | | | |
| 26 | | 20'-5" | | 980'-0" | | | | | | | | | | | | |
| 27 | | 19'-10" | | 952'-0" | | | | | | | | | | | | |
| 28 | | 19'-2" | | 920'-0" | | | | | | | | | | | | |
| 29 | | 18'-6" | | 888'-0" | | | | | | | | | | | | |
| 30 | | 17'-11" | | 860'-0" | | | | | | | | | | | | |
| 31 | | 17'-4" | | 832'-0" | | | | | | | | | | | | |
| 32 | | 16'-8" | | 800'-0" | | | | | | | | | | | | |
| 33 | | 16'-0" | | 768'-0" | | | | | | | | | | | | |
| 34 | | 15'-5" | | 740'-0" | | | | | | | | | | | | |
| 35 | | 14'-9" | | 708'-0" | | | | | | | | | | | | |
| 36 | | 14'-2" | | 680'-0" | | | | | | | | | | | | |
| 37 | | 13'-6" | | 648'-0" | | | | | | | | | | | | |
| 38 | | 12'-11" | | 622'-0" | | | | | | | | | | | | |
| 39 | | 12'-3" | | 588'-0" | | | | | | | | | | | | |
| 40 | | 11'-7" | 48 | 556'-0" | | | | | | | | | | | | |
| 41 | | 11'-0" | 36 | 396'-0" | | | | | | | | | | | | |
| 42 | | 10'-4" | | 372'-0" | | | | | | | | | | | | |
| 43 | | 9'-9" | | 351'-0" | | | | | | | | | | | | |
| 44 | | 9'-2" | | 330'-0" | | | | | | | | | | | | |
| 45 | | 8'-6" | | 306'-0" | | | | | | | | | | | | |
| 46 | | 7'-10" | | 282'-0" | | | | | | | | | | | | |
| 47 | | 7'-2" | | 258'-0" | | | | | | | | | | | | |
| 48 | | 6'-7" | | 237'-0" | | | | | | | | | | | | |
| 49 | | 5'-11" | | 213'-0" | | | | | | | | | | | | |
| 50 | | 5'-4" | | 192'-0" | | | | | | | | | | | | |
| 51 | | 4'-8" | | 168'-0" | | | | | | | | | | | | |
| 52 | | 4'-1" | | 147'-0" | | | | | | | | | | | | |
| 53 | | 3'-5" | | 123'-0" | | | | | | | | | | | | |
| 54 | | 2'-10" | | 102'-0" | | | | | | | | | | | | |
| 55 | 5 | 2'-2" | 36 | 78'-0" | 1 | | | | | | | | | | | |
| 56 | 5 | 9'-3 | 216 | 1998'-0" | 1 | | | | | | | | | | | |
| 57 | 4 | 26'-6 | 492 | 13038'-0" | 1 | | | | | | | | | | | |

| MARK | SIZE | LGTH. | NO. REQ. | TOTAL LENGTH | TYPE | A | B | C | D | E |
|---|---|---|---|---|---|---|---|---|---|---|

*2-#8 ABOVE 4.0

DGN: Files 1P PWPhoenix\16721\4433.C-342-16_for-inf.dgn

02-MAY-2005

STEEL

| F | G | H | J | K | O |
|---|---|---|---|---|---|

| MARK | SIZE | LGTH. | NO. REQ. | TOTAL LENGTH | TYPE | A | B | C | D | E | F | G | H | J | K | O |
|---|---|---|---|---|---|---|---|---|---|---|---|---|---|---|---|---|

| FED. AID PROJ. NO. | STATE | FED. AID PROJ. NO. | FISCAL YEAR | SHEET NO. | TOTAL SHEETS |
|---|---|---|---|---|---|
| | UT UTAH | | | | |

BAR TYPES

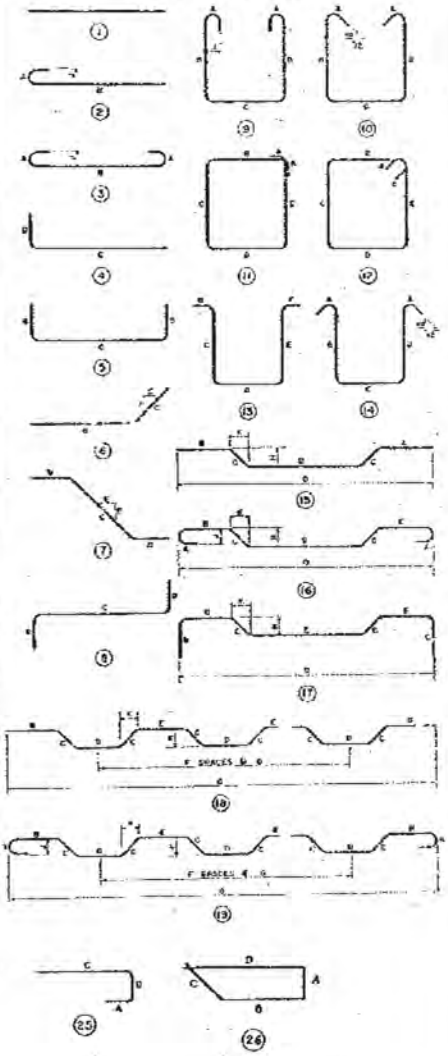


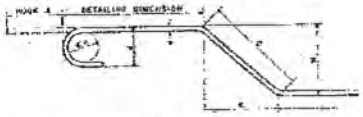


HOOK DETAIL

**FOR INFORMATION ONLY**

GENERAL NOTES

1. All placing drawings, detailing, and fabrication shall be in accordance with the "Manual of Standard Practice for Detailing Reinforced Concrete Structures (ACI 315-57)".
2. All dimensions shown for bar bending details are out-to-out of bars.

REGISTERED PROFESSIONAL ENGINEER NO. 2164 J. R. NEWVILLE STATE OF UTAH

DESIGN AND DRAWING BY
WESTERN ENGINEERS, INC. AND
EDWARDS AND KELCEY
CONSULTING ENGINEERS

SUBMITTED BY J. R. Newville
CHIEF ENGINEER
UTAH STATE REG. NO. 2164

*REINFORCING SCHEDULE*

SHEET 16 OF 19 SHEETS

UTAH STATE ROAD COMMISSION
SALT LAKE CITY, UTAH
BRIDGE DEPARTMENT

LEHI 3RD. WEST OVERPASS
155'-7 1/8" O. TO O. 47° XING ∠
STA. 75+40.06 I-15-6 (10) 126 (12) REVISE
LEHI - PROVO UTAH COUNTY

DESIGNED BY M SCALE
DRAWN BY T. CAL ISSUED Oct. 29, 1962
TRACED BY APPROVED D. L. Sargent
CHIEF BRIDGE ENGINEER
CHECKED BY K.S.

S.A. NO. DWG. NO. C-342

STRUCTURE 1-02

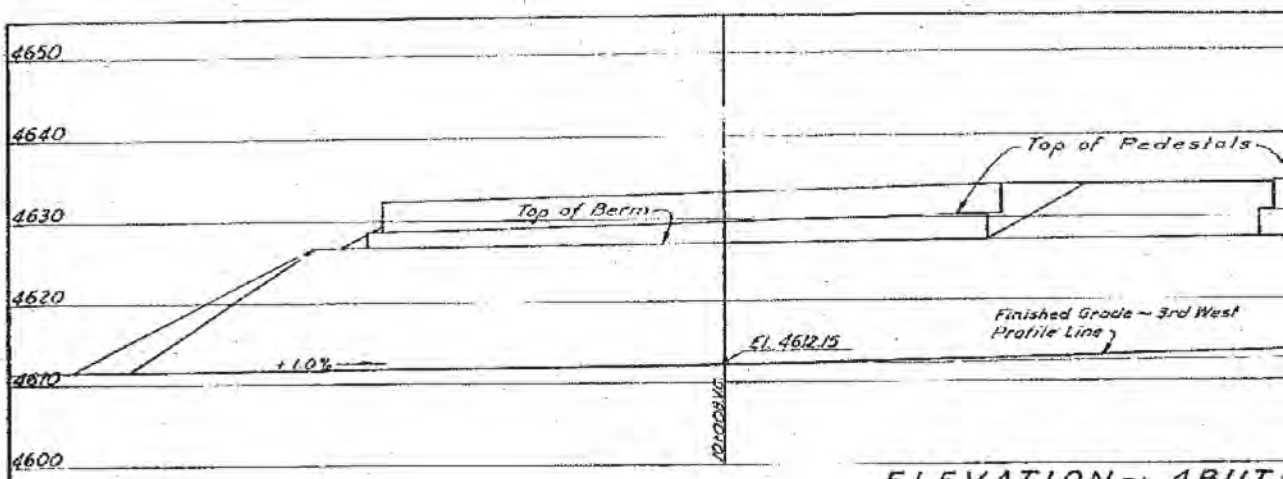


ELEVATION ~ ABUT
(NORMAL TO 3RD WEST S

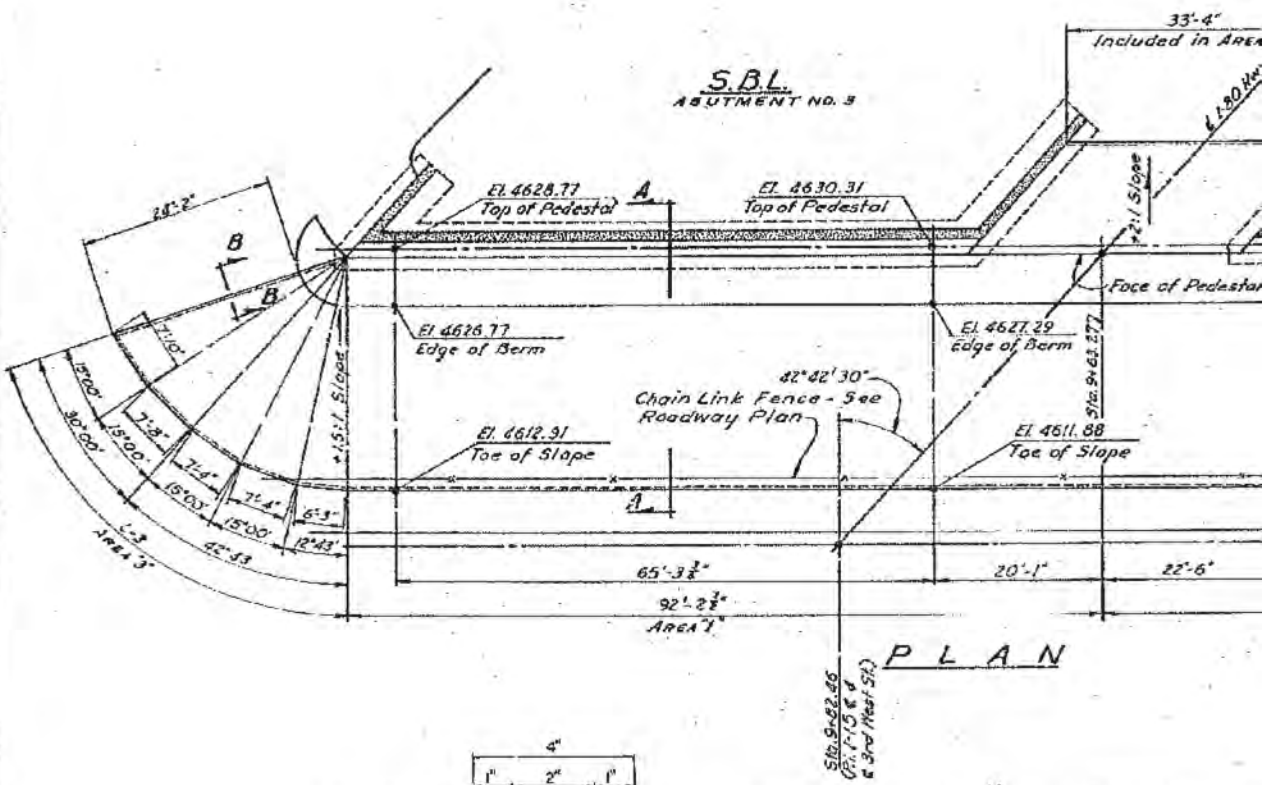


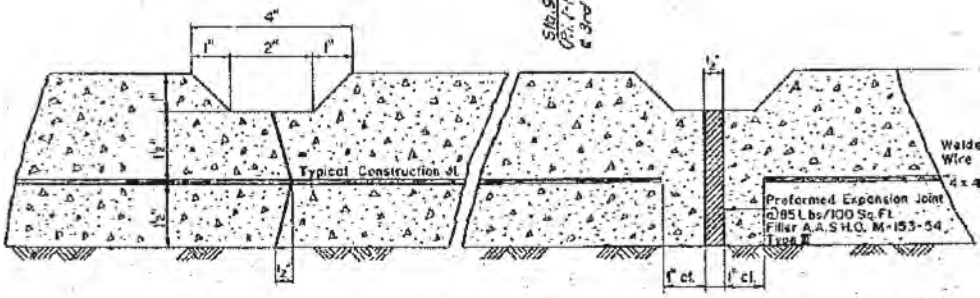


Locate Construction Joints as needed in placing concrete slab. Locate vertical Expansion Joints at 40'-0" max. spacing in slab.

SECTION C-C

SECTION D-D

[redacted]

## CONC. SLOPE PROTECTION

| Location No. | Avg. Slope Length | Area "1" ② | Area "2" or "3" ③ | Quantity Sq. Yd. ① |
|---|---|---|---|---|
| Abut. 1 & 3 | 26.15' | 714.49 | 69.70 | 784 |
| | | | | |
| | | | | |
| | | | | 784 |

NOTES

① Quantity in Sq. Yd. is estimated exposed area.
② Area "1" = (Berm Width + Slope Length) x Toe Length
③ Area "2" or "3" = (Slope Length + 6'-0") x Toe Length x ½

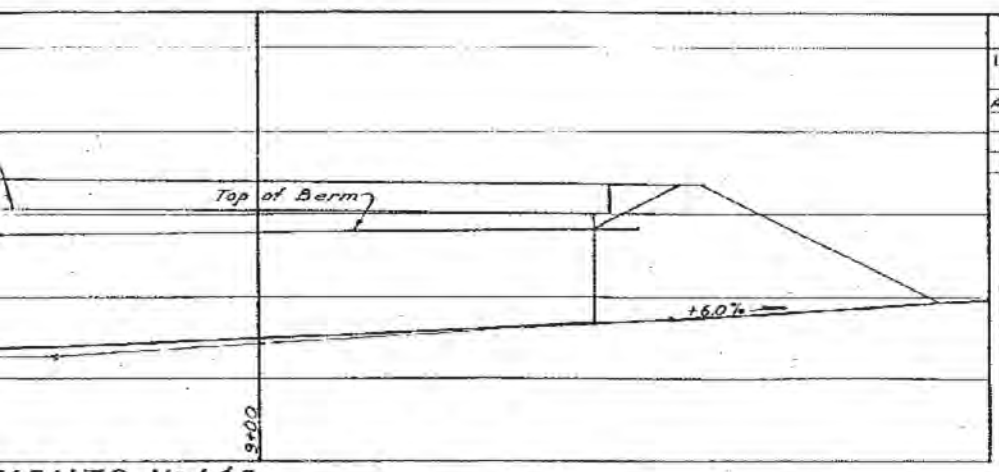


MENTS No. 1 & 3
STREET)

**FOR INFORMATION ONLY**

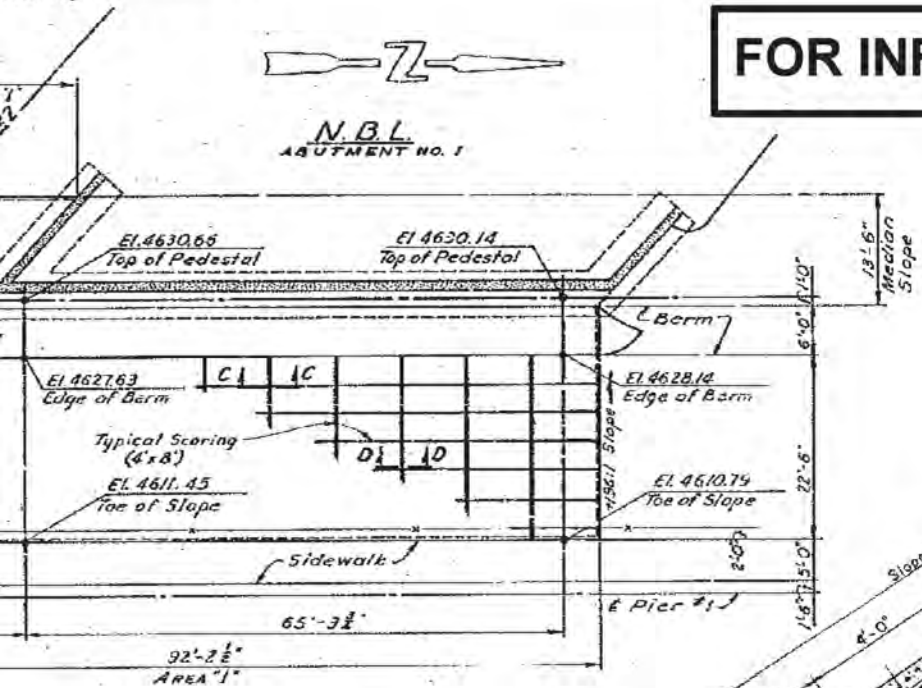


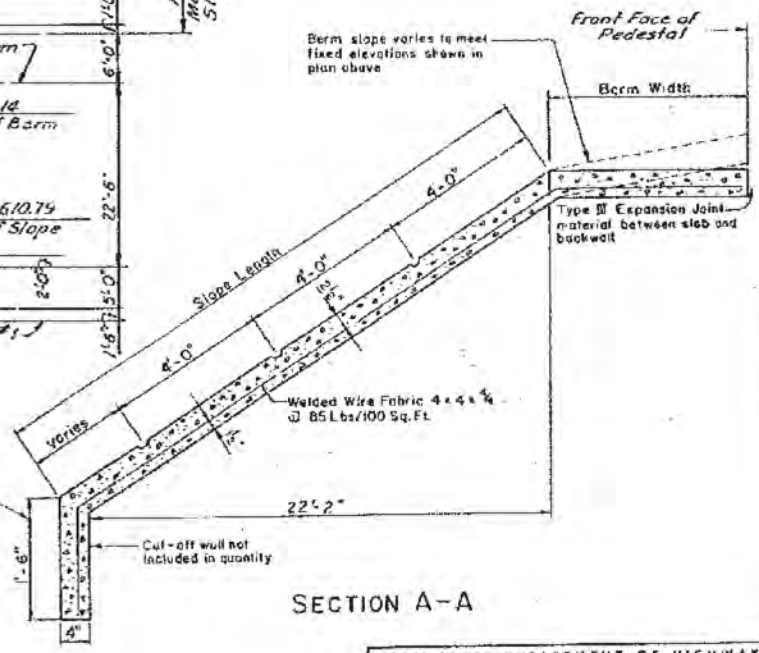


SECTION A-A

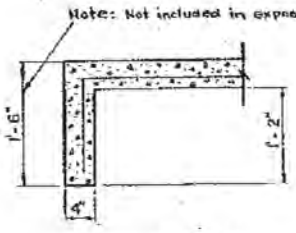


SECTION B-B
(Cut-off wall Detail)

UTAH STATE DEPARTMENT OF HIGHWAYS
SALT LAKE CITY, UTAH
STRUCTURES DIVISION

LEHI TO PROVO
LEHI 3rd WEST OVERPASS
REINF. CONC. SLOPE PROTECTION

| | | |
|---|---|---|
| DESIGNED BY | CHECKED BY | I-15-6(19)272 (10 County) PROJECT NUMBER |
| DRAWN BY J.H.O. | CHECKED BY | |
| QUANTITIES BY | CHECKED BY | 75+48.06 STATION |
| APPROVED RECOMMENDED BY | GROUP LEADER | UTAH COUNTY |
| APPROVED Oct. 29, 1962 DATE | D. L. Sargent CHIEF ENGINEER, STRUCTURES | |

| NO. | BY | DATE | CHANGE |
|---|---|---|---|
| | | | |

REVISIONS

DR. NO.

ORIG. NO. C-342 | 17 of 19

OF-SP-2

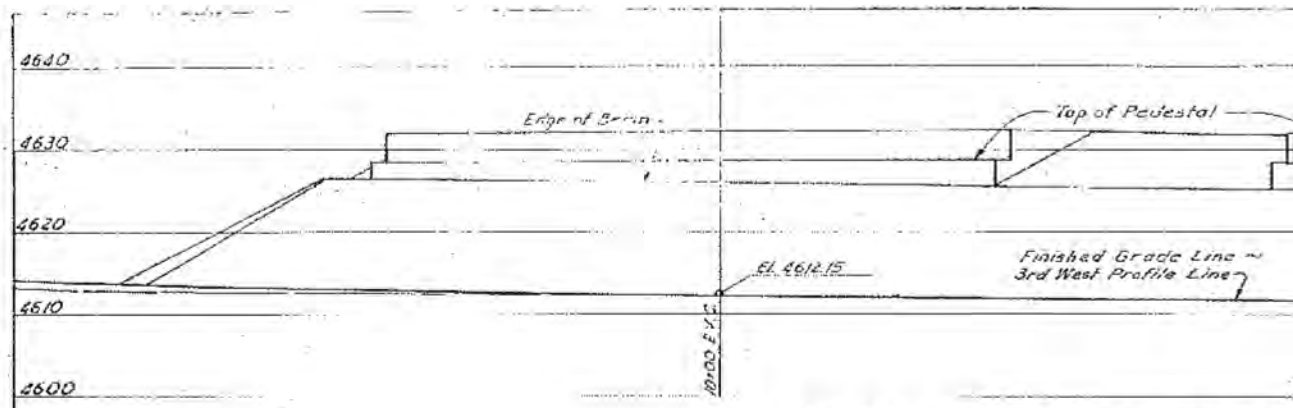


ELEVATION~ ABUTMENTS
(NORMAL TO 3RD WEST STREET)

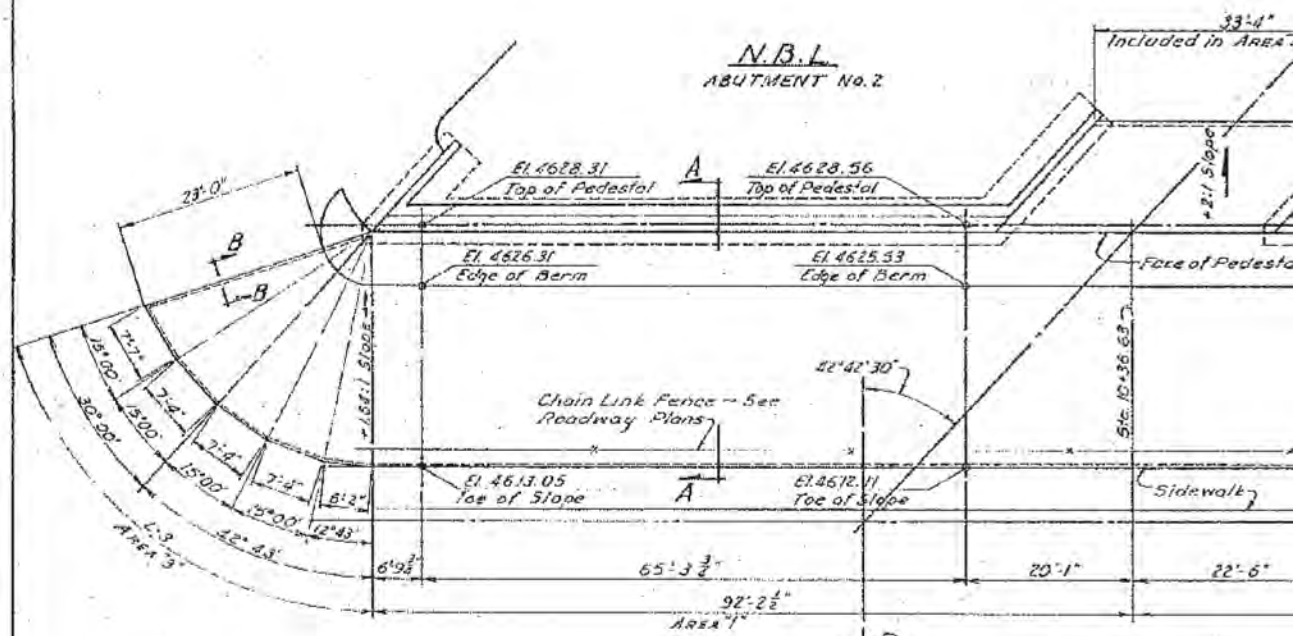


PLAN

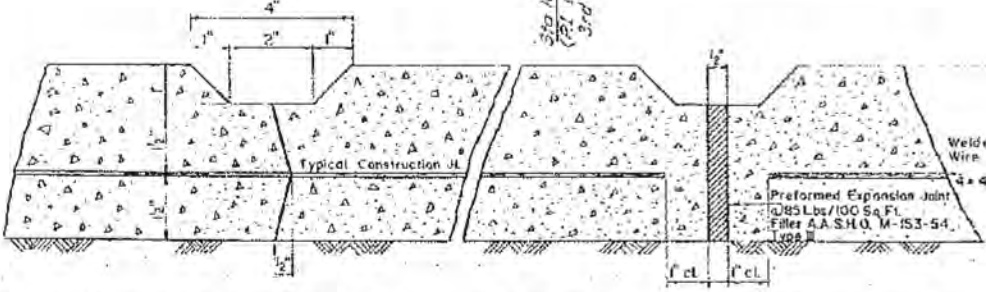


Locate Construction Joints as needed in placing concrete slab. Locate vertical Expansion Joints at 40'-0" max. spacing in slab.

SECTION C-C

SECTION D-D

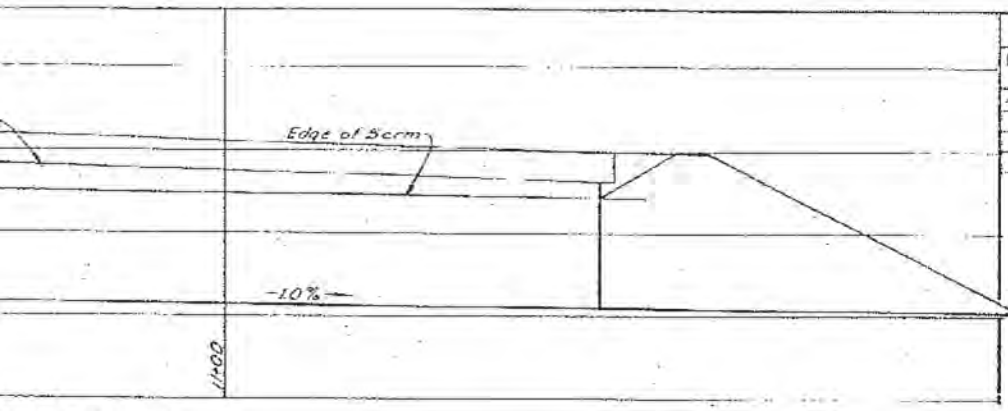


## CONC. SLOPE PROTECTION

| Location No. | Avg. Slope Length | Area "1" ② | Area "2" or "3" ③ | Quantity Sq. Yd. ① |
|---|---|---|---|---|
| About 264 | 25.88' | 715.72 | 73.65 | 789 |
| | | | | |
| | | | | |
| | | | | 789 |

NOTES

① Quantity in Sq. Yd. is estimated exposed area.
② Area "1" = (Berm Width + Slope Length) x Toe Length
③ Area "2" or "3" = (Slope Length + 6'-4") x Toe Length x ½

C No. 2 & 4

**FOR INFORMATION ONLY**

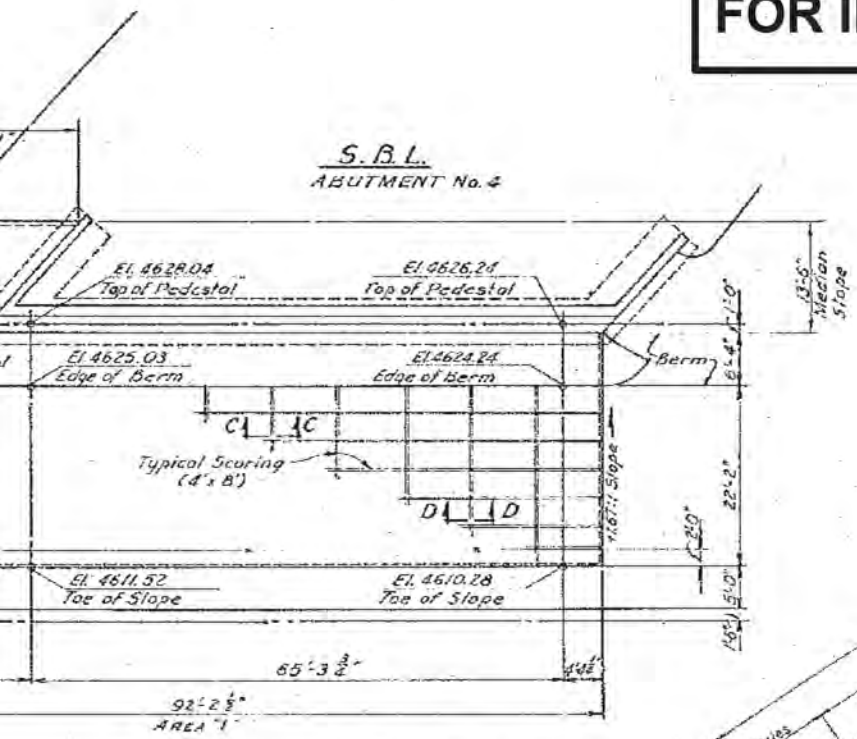


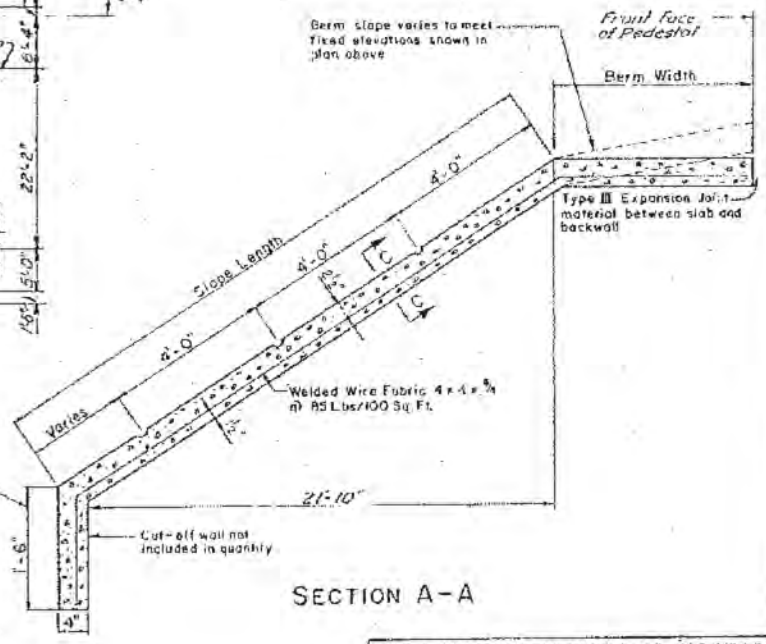


SECTION A-A

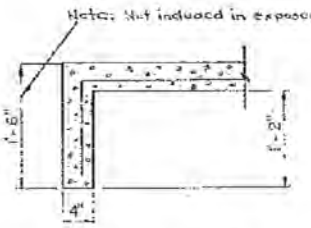


SECTION B-B
(Cut-off wall Detail)

UTAH STATE DEPARTMENT OF HIGHWAYS
SALT LAKE CITY, UTAH
STRUCTURES DIVISION
LEHI TO PROVO
LEHI 3rd WEST OVERPASS
REINF. CONC. SLOPE PROTECTION

| | | |
|---|---|---|
| | | I-15-6(=)270-15 |
| J.H.D. | | 75+48.06 |
| | | UTAH |
| Oct 29, 1962 | D.L. Sargent | |

REVISIONS

C-342 18 of 19

OF-SP-2

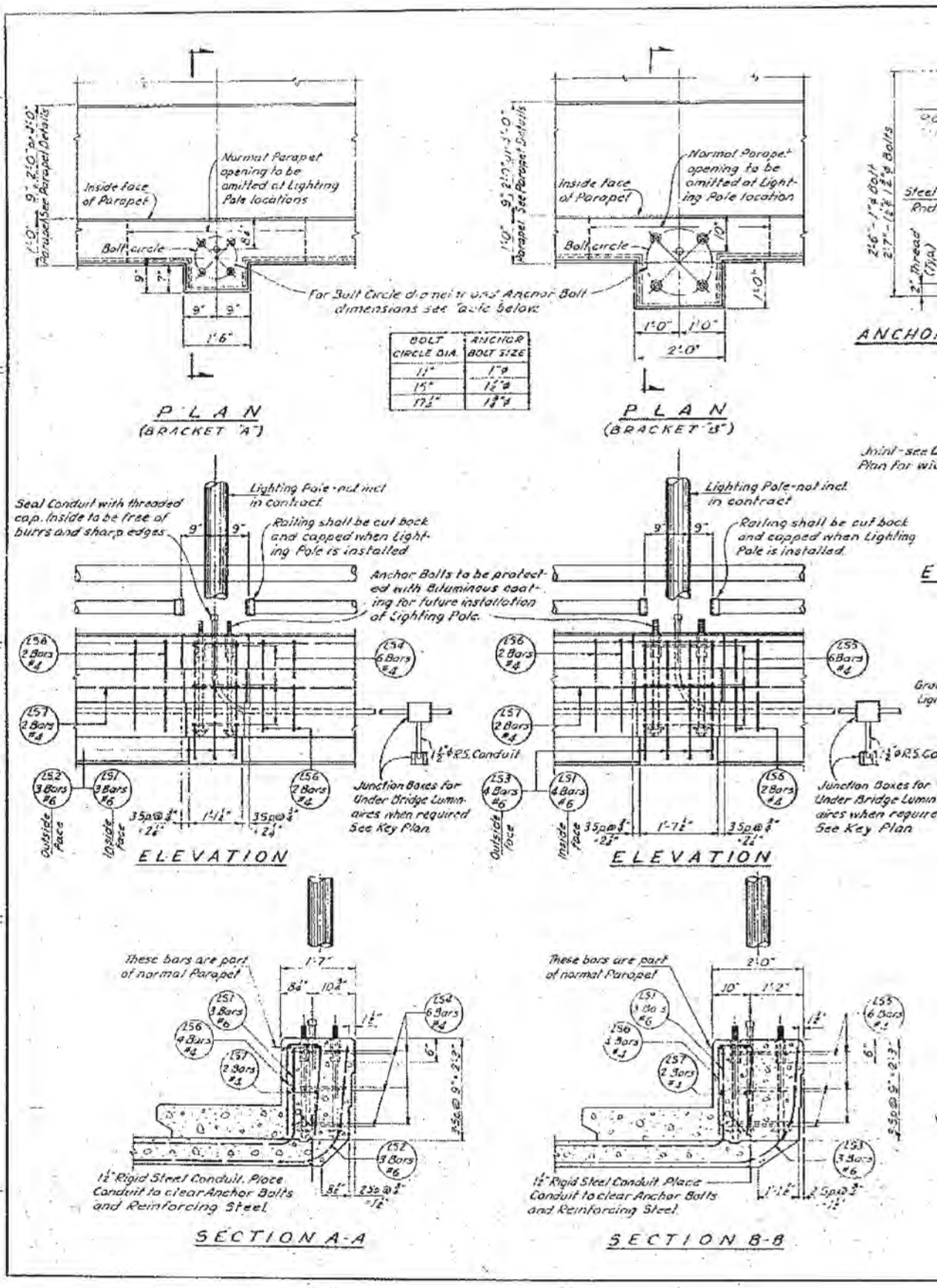


| BOLT CIRCLE DIA. | ANCHOR BOLT SIZE |
|---|---|
| 11" | 1" ø |
| 15" | 1½" ø |
| 17½" | 1¾" ø |

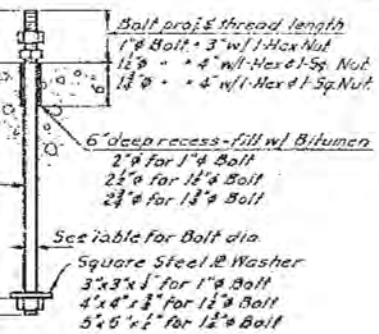


R BOLT DETAIL

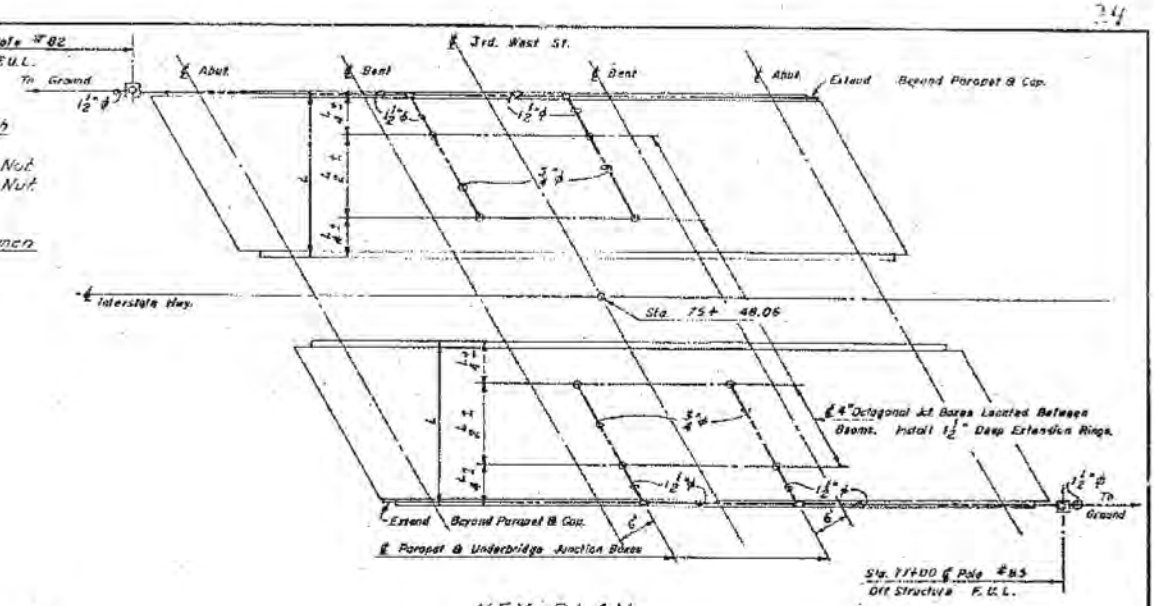


KEY PLAN

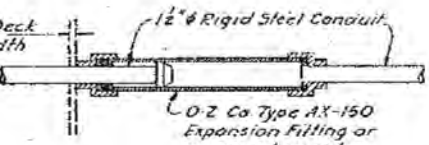


XPANSION FITTING DETAIL

Note

Light Pole stationing, if shown, is approximate. Pole Mounting Bracket shall be located midway between railing posts nearest the station indicated.

STEEL SCHEDULE - POLE SUPPORT

| MARK | SIZE | LENGTH | AMT | SKETCH |
|---|---|---|---|---|
| LS1 | 6 | 5'-2" | | 2'-0" 1'-10" 4"R |
| LS2 | 6 | 6'-1" | | 3'-3" 11"R 2½" |
| LS3 | 6 | 6'-4" | | 3'-4" 1'-5"R 2½" |
| LS4 | 4 | 3'-3" | | LS4 - 1'-1" LS5 - 1'-6" |
| LS5 | 4 | 4'-8" | | |
| LS6 | 4 | 4'-11" | | 2'-1" 12 11 |
| LS7 | 4 | | | |

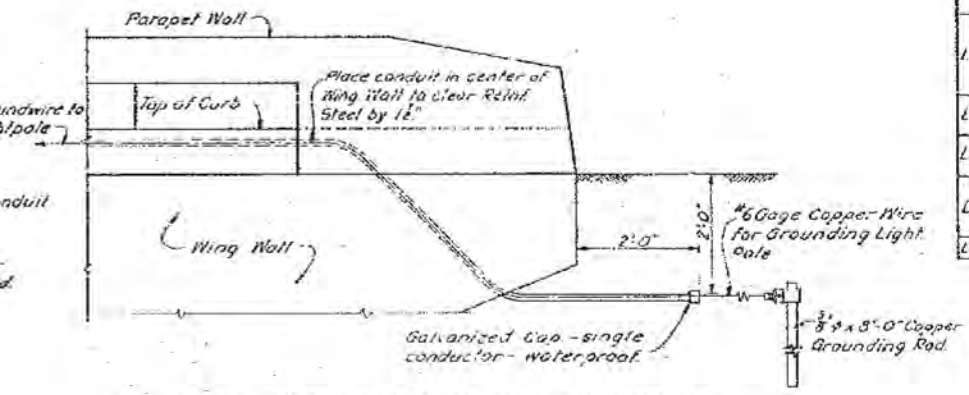


CONDUIT TERMINATION AT WING WALLS

GENERAL NOTES

1. Rigid Steel Conduit, threaded and galvanized, shall conform to Federal Specifications WW-C-581c.

2. Conduit Expansion Fittings shall be installed where ever conduit crosses structure expansion joints.

3. Conduit shall terminate at junction boxes with double lock nuts and insulated grounding type bushings. Bushings shall be O-Z Co. Type BL or approved equal. All conduit shall be bonded in boxes with bare #6 AWG Copper wire.

4. All work shall conform to the latest Edition of the National Electrical Code.

5. See Special Provisions for Electrical Work - Bridges.

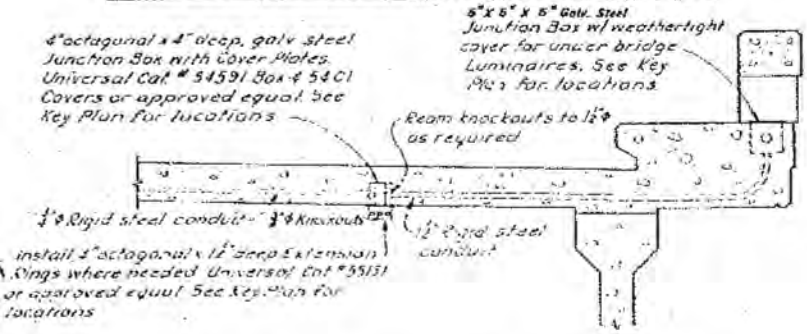


DETAILS FOR FUTURE SUSPENDED UNDERPASS LUMINAIRES

UTAH STATE DEPARTMENT OF HIGHWAYS
SALT LAKE CITY, UTAH
STRUCTURES DIVISION
LEHI TO PROVO
LEHI 3rd WEST OVERPASS
LIGHTING DETAILS FOR STRUCTURE

| | | |
|---|---|---|
| DESIGNED BY | CHECKED BY | 3-15-6(19) 276 |
| DRAWN BY J.H.O. | CHECKED BY | |
| QUANTITIES BY | CHECKED BY | 75+48.06 |
| APPROVED | | UTAH |
| APPROVED | DATE | |
| SHEET NO. | DWG NO. C-342 | 19 of 19 |

STRUCTURE 1-02

**FOR INFORMATION ONLY**

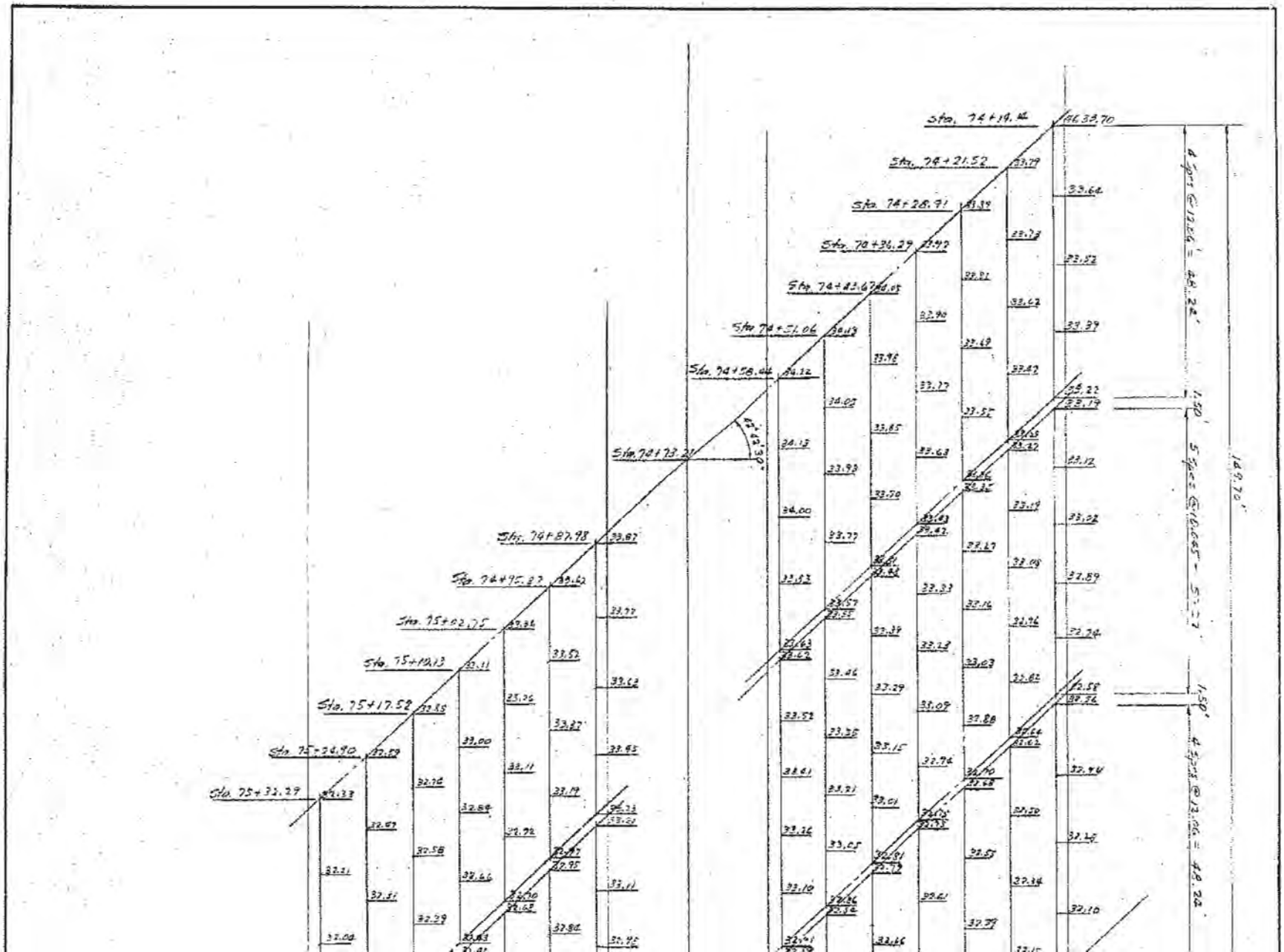
Sta. 74+19.46
Sta. 74+21.52
Sta. 74+28.91
Sta. 74+36.29
Sta. 74+43.67
Sta. 74+51.06
Sta. 74+58.44
Sta. 74+73.21
Sta. 74+87.98
Sta. 74+95.37
Sta. 75+02.75
Sta. 75+10.13
Sta. 75+17.52
Sta. 75+24.90
Sta. 75+32.29
42°42'30"
149.70'
1.50'
1.50'

**FOR INFORMATION ONLY**

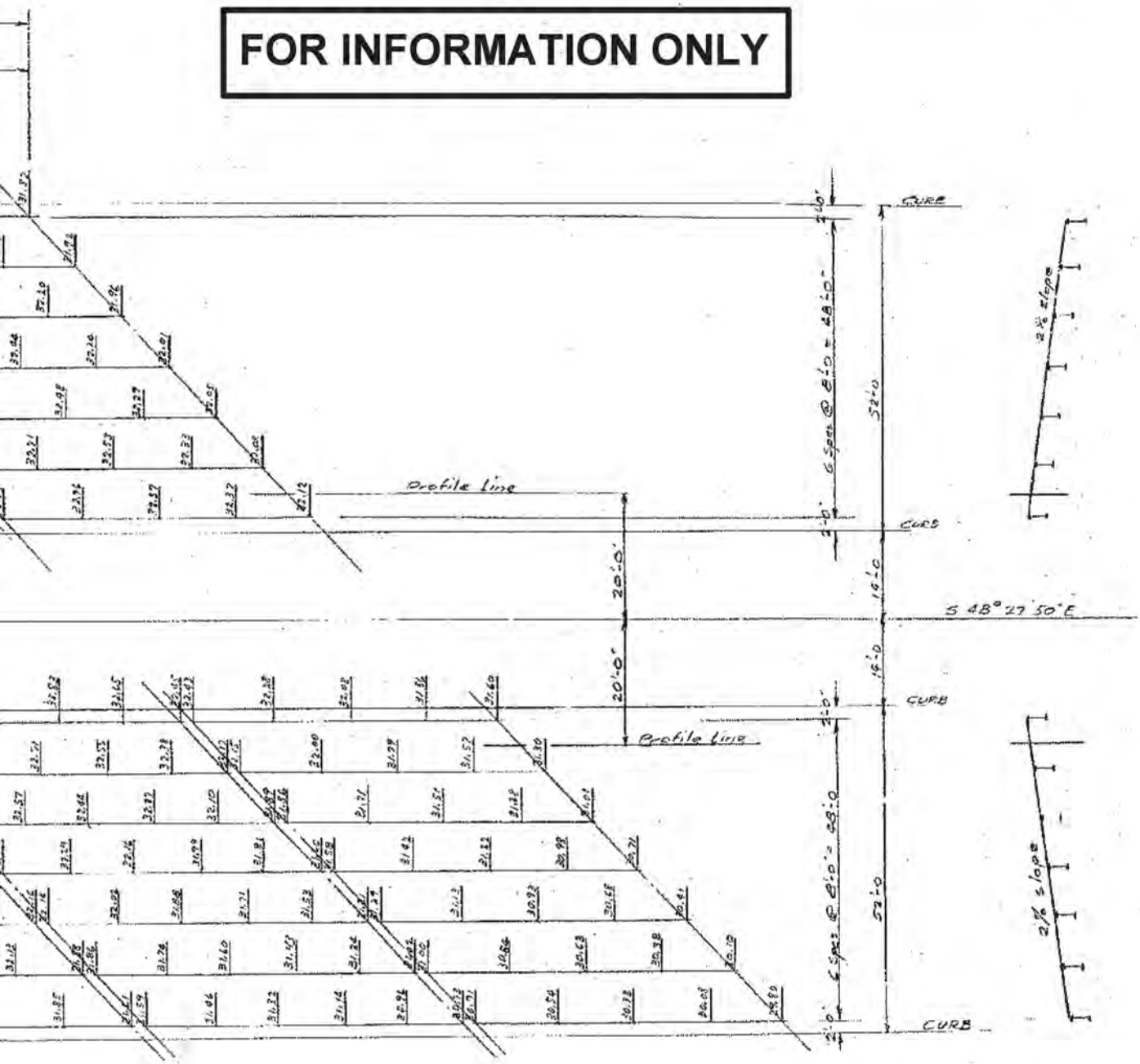


Note:
Elevations shown are finish grade plus 1.25 times slab dead load deflection. ($\Delta = .047 \times 1.25 = .06$)

UTAH STATE DEPARTMENT OF HIGHWAYS
SALT LAKE CITY, UTAH
STRUCTURES DIVISION

LEHI PROVO
LEHI 3RD WEST OVERPASS
SCREED ELEVATIONS

| | | |
|---|---|---|
| DESIGNED BY | CHECKED BY R.E.W. | I-15-6(19) 276 |
| DRAWN BY L.S.N. | CHECKED BY | PROJECT NUMBER |
| QUANTITIES BY | CHECKED BY | 75+48.06 |
| APPROVAL RECOMMENDED BY | GROUP LEADER | STATION |
| APPROVED Oct. 23, 1962 D.L. Sargent | | UTAH |
| DATE | | COUNTY |
| BR. NO. | DRG. NO. C-342 | 19 of 19 |

| NO. | BY | DATE | REMARKS |
|---|---|---|---|
| | | | |

REVISIONS

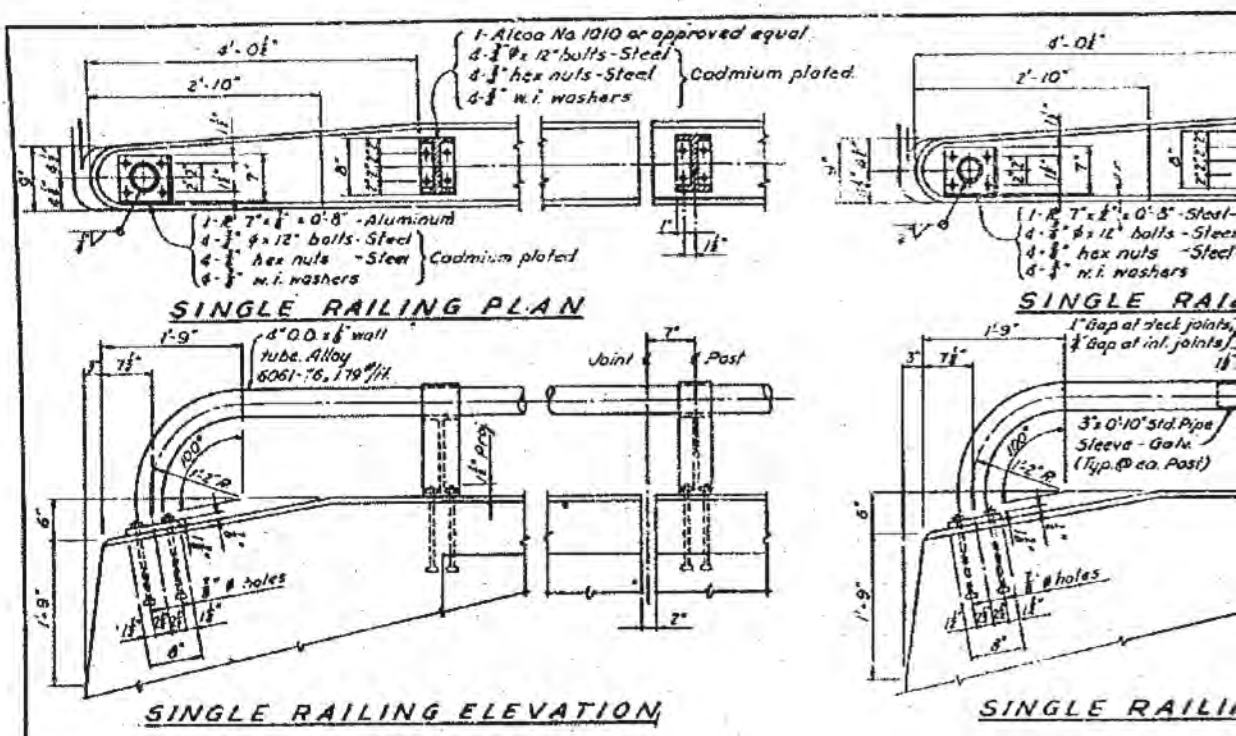


**FOR INFORMATION ONLY**

ALUMINUM RAILING DETAILS

I-15-6(19)276 12th Contr.

DGN Files 3P, PW\dms\16721\4433.C-042-MR-L.Pierson\ooden

02-MAY-2005

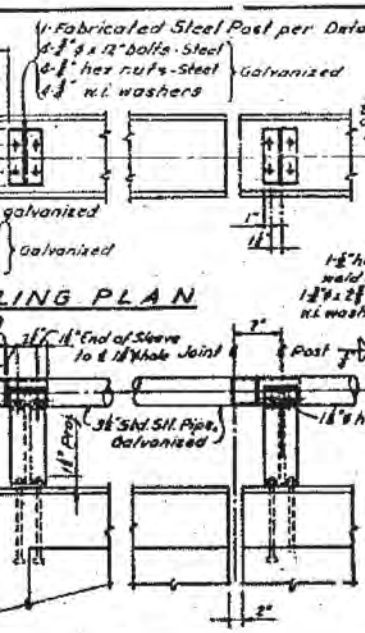


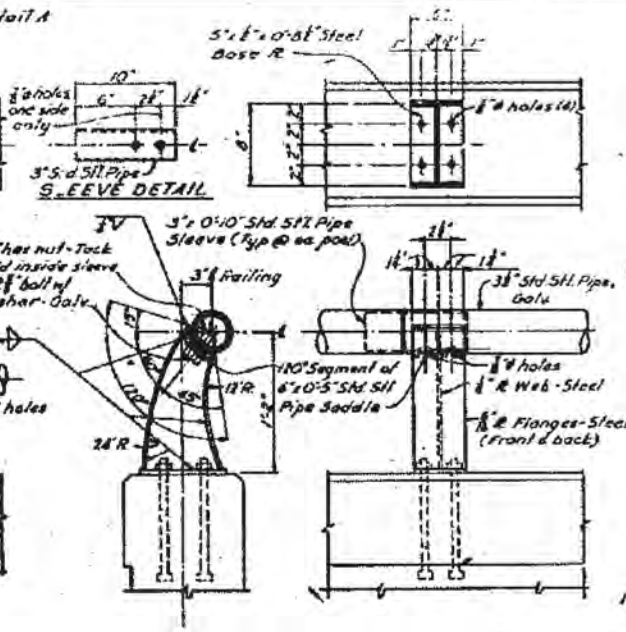


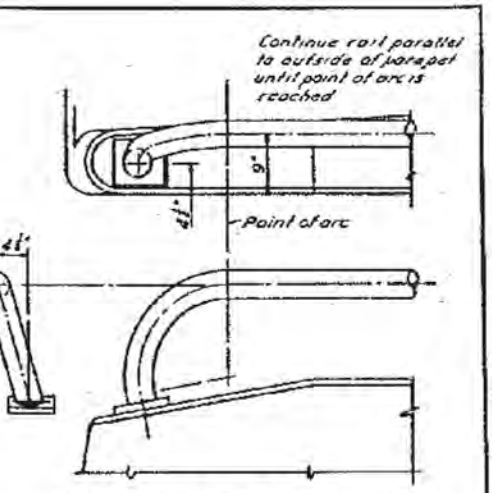


NG ELEVATION

DETAIL A

DETAIL AT RAIL END
(TYPICAL FOR STEEL OR ALUMINUM)

GENERAL NOTES (STEEL)

1-Fabricated steel posts shall be galvanized in accordance with the Specifications for zinc (hot galv.) coating on Structural Steel Shapes, per A.A.S.H.O. M-11.

2-All sheared edges and welds at outside of flanges of post shall be finished to a smooth surface before galvanizing.

(ALUMINUM)

1-The contact surfaces of concrete and aluminum shall be thoroughly coated with aluminum impregnated caulking compound.

2-Aluminum post castings are to be supplied with a uniform standard belt grind (36 grit belt) on major exposed surfaces. Cavities, recessed areas shall have a cast surface. Flash shall be removed as necessary for proper installation.

STEEL RAILING DETAILS

SAVE

UTAH STATE DEPARTMENT OF HIGHWAYS
SALT LAKE CITY, UTAH
STRUCTURES DIVISION

RAILING DETAILS

DESIGNED BY
DRAWN BY J.H.Q.
CHECKED BY
CHECKED BY
CHECKED BY
PROJECT NUMBER
PROJECT LEADER
STATION
COUNTY
APPROVED Nov. 5, 1962 D.L. Sugart
DWG. NO. MR-1
OF

| NO. | BY | DATE | REMARKS |
|---|---|---|---|
| | | | REVISIONS |

TO ACCOMPANY C-342 196

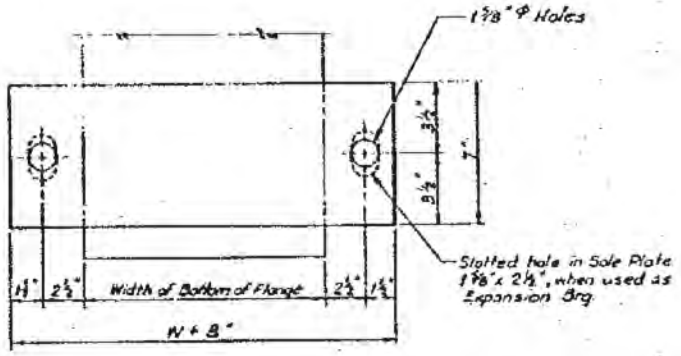


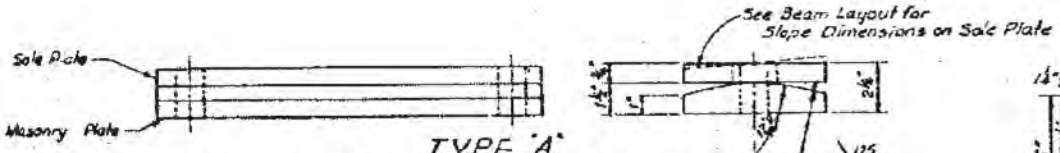


TYPE "A"
DETAIL OF SOLE & MASONRY PLATE ASSEMBLY
AT FIXED BEARING
USED AS EXPANSION BEARING ON SPANS
50' OR LESS

AT TYPE "A"

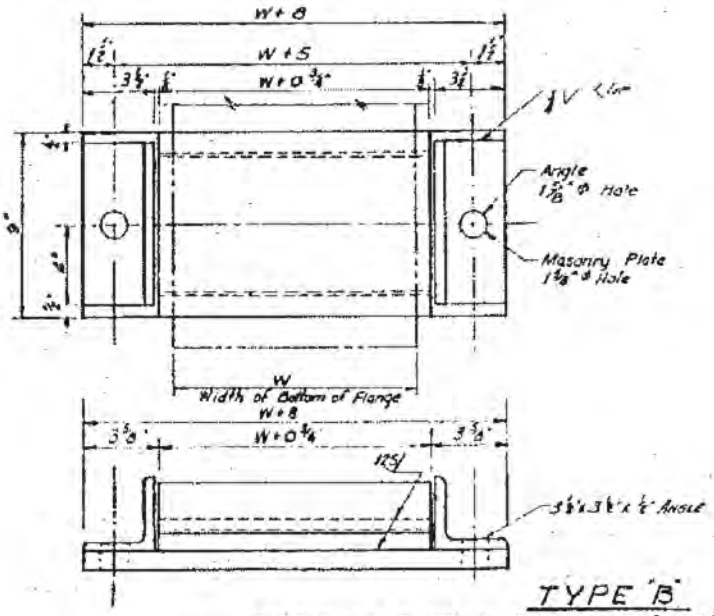


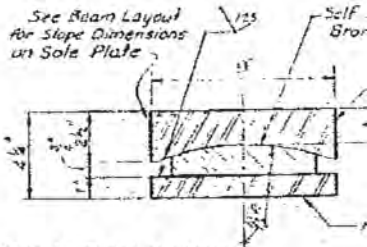


TYPE "B"
DETAIL OF SLIDING PLATE ASS'Y AT EXPANSION BEARING
ON SPANS ABOVE 50 FT.

02-MAY-2005 DGN Files:IP_PwPubes\16721\4433.C-042-59-3.forninfoadan

**FOR INFORMATION ONLY**

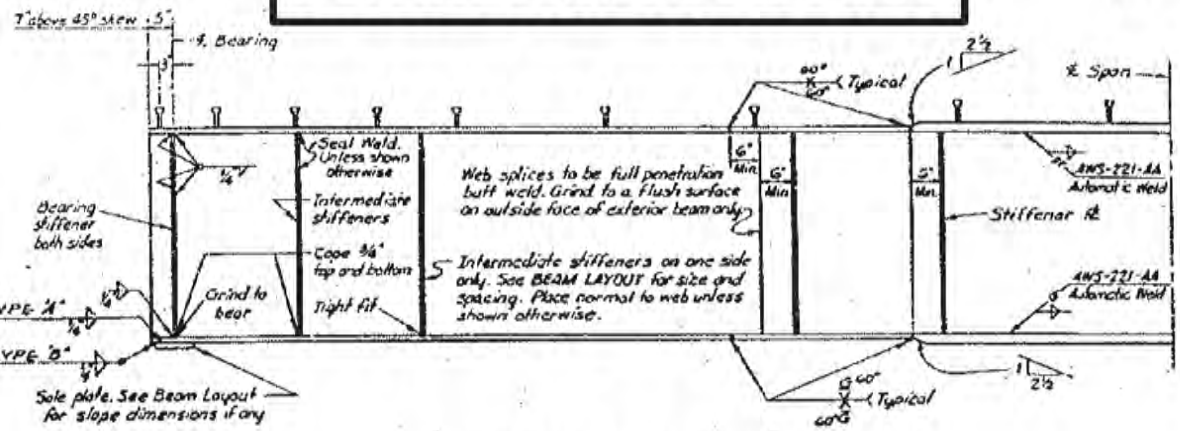


WELDED PLATE BEAM

## STRUCTURAL STEEL NOTES

1- Structural steel for welding shall conform to the Specifications for Structural Steel for Welding of A.A.S.H.O. M-165 (A.S.T.M. A-373)

2- The methods of joint preparation for welding shown on the plans are based on the use of manually shielded arc welding. In the event that automatic or semi-automatic submerged arc processes are used, the Contractor may submit alternative methods of joint preparation for approval of the Engineer.

3- Strength Fillet weld or alternate shall be the minimum sized welds required by the Standard Specifications of the A.W.S. for thickness of the material joined, unless otherwise specified.

4- All seal weld shall be minimum 5/16" fillet.

1

2

3

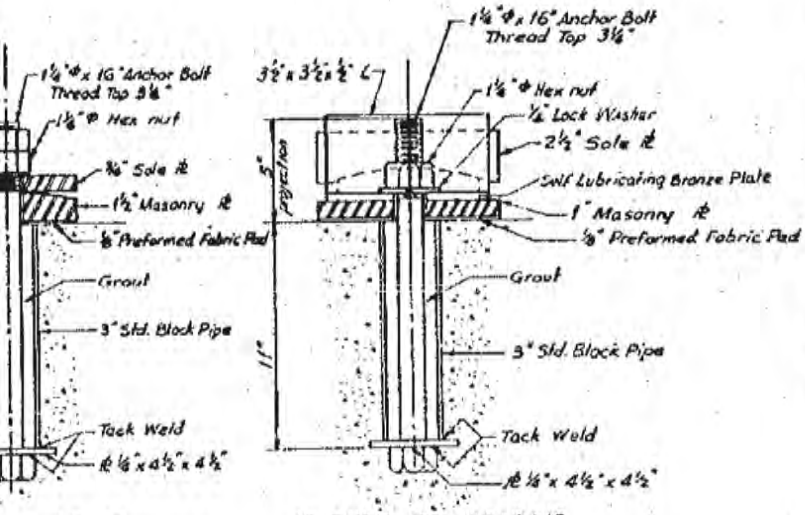


BEARING

AT TYPE "B" BEARING

ANCHOR BOLT

NOTE: Bridge Seat Bearing Areas (2" larger than Masonry Plate) shall be finished high and rubbed or ground to grade within ±⅛" No grouting

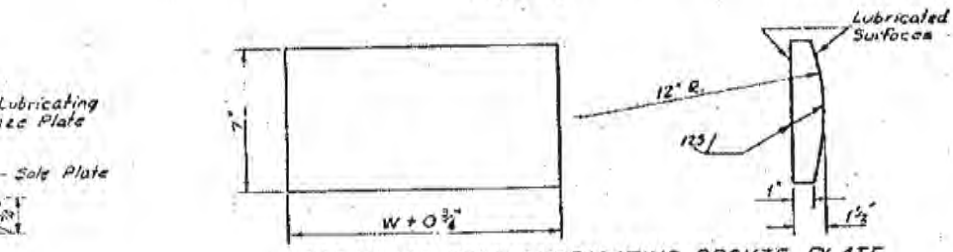


DETAIL OF SELF LUBRICATING BRONZE PLATE

| NO. | BY | DATE | REMARKS |
|---|---|---|---|
| 3 | TEP | 1-5-62 | Removed Fabric Pad Note |
| 2 | TEP | 1-5-62 | Removed Struct. Steel Paint Note |
| 1 | TEP | 1-5-62 | Removed Radiographic ℞ Note |

REVISIONS

UTAH STATE ROAD COMMISSION
SALT LAKE CITY, UTAH
STRUCTURES DIVISION

COMPOSITE WELDED STEEL BEAM SUPERSTRUCTURE
STANDARD
STEEL DETAILS

PREPARED BY MW — CHECKED BY [illegible]
DRAWN BY C.T.C. — CHECKED BY [illegible]
QUANTITIES BY — CHECKED BY
APPROVAL — BRIDGE ENGINEER
RECOMMENDED BY OLT — DIVISION ENGINEER
APPROVED March 7, 1962 — R.L. Sargent — STATE ROAD COMMISSIONER
DATE — COUNTY

SR NO. — DWG. NO. SS-3 — OF

C-342

196

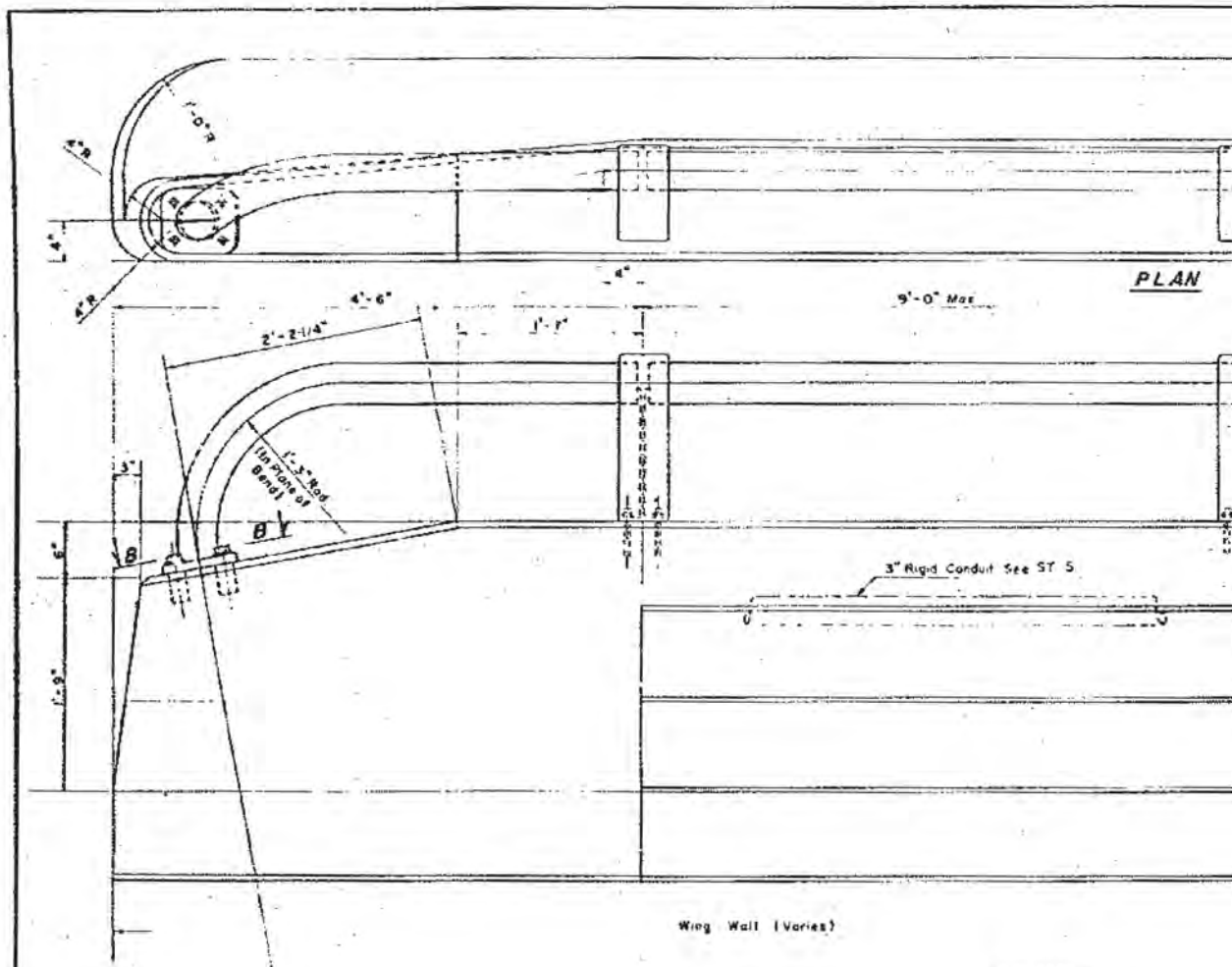


Note:

The curb and parapet shall not be poured until at least 7 days after the slab has been poured and until all shoring has been removed.

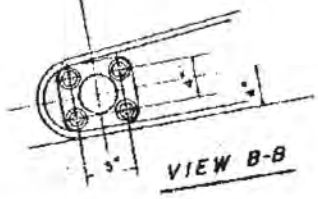


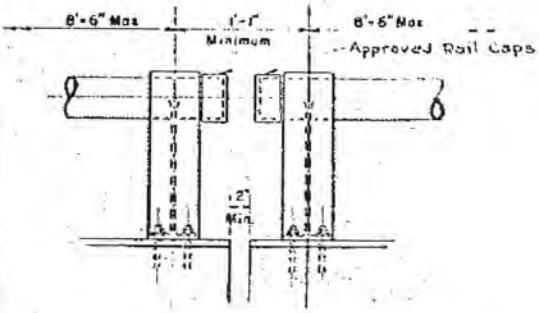


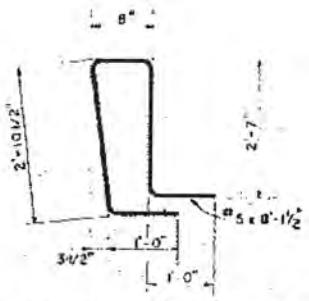


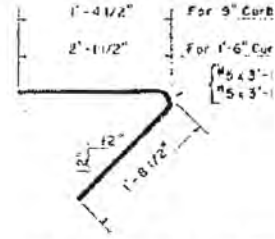

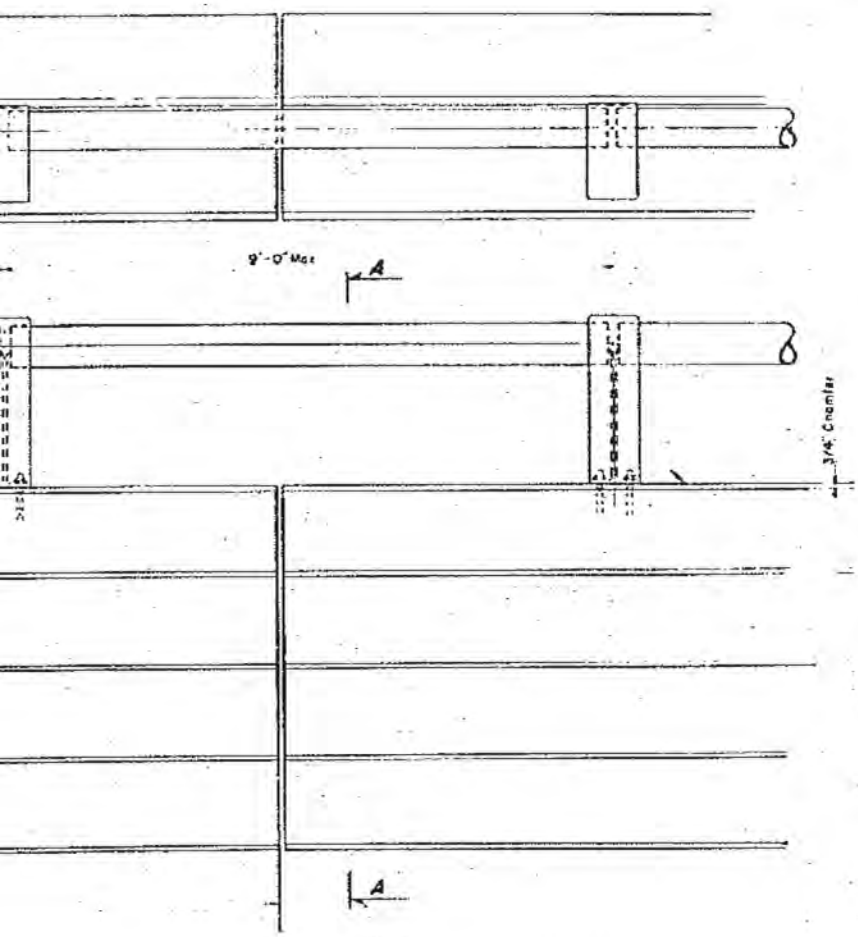


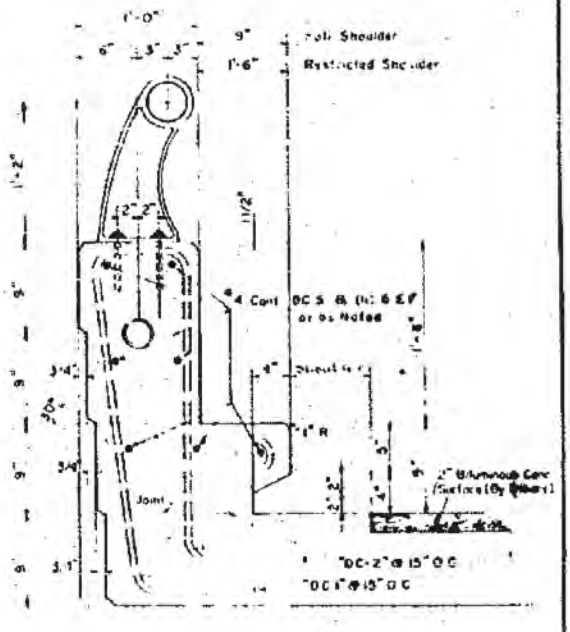


SECTION A-A

Note: For Railing Details, see Sheet NR-1.

**FOR INFORMATION ONLY**

" For 9" Curb
0" For 1'-6" Curb

C-2"

NOTE:
See Individual Structure Plans for Curb Widths and Spacing of Posts

DESIGN AND DRAWING BY
WESTERN ENGINEERS, INC. AND
EDWARDS AND KELCEY
CONSULTING ENGINEERS

STANDARD PARAPET WITH SINGLE RAIL METAL RAILING

W.P. MILE
W.E. LOWRY
W.F. [illegible]
Mar. 6, 1962
D.L. Sargent

ST-1

C-342 19d

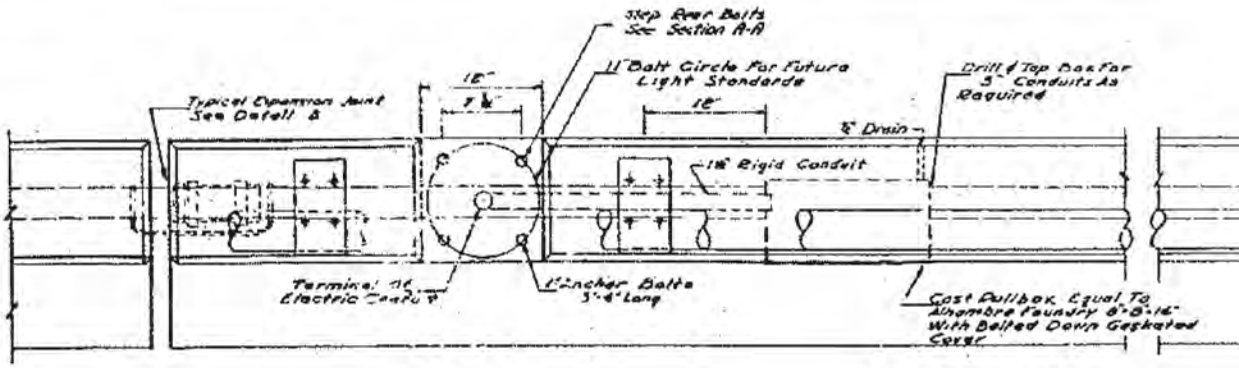


TYPICAL PARAPET PLAN

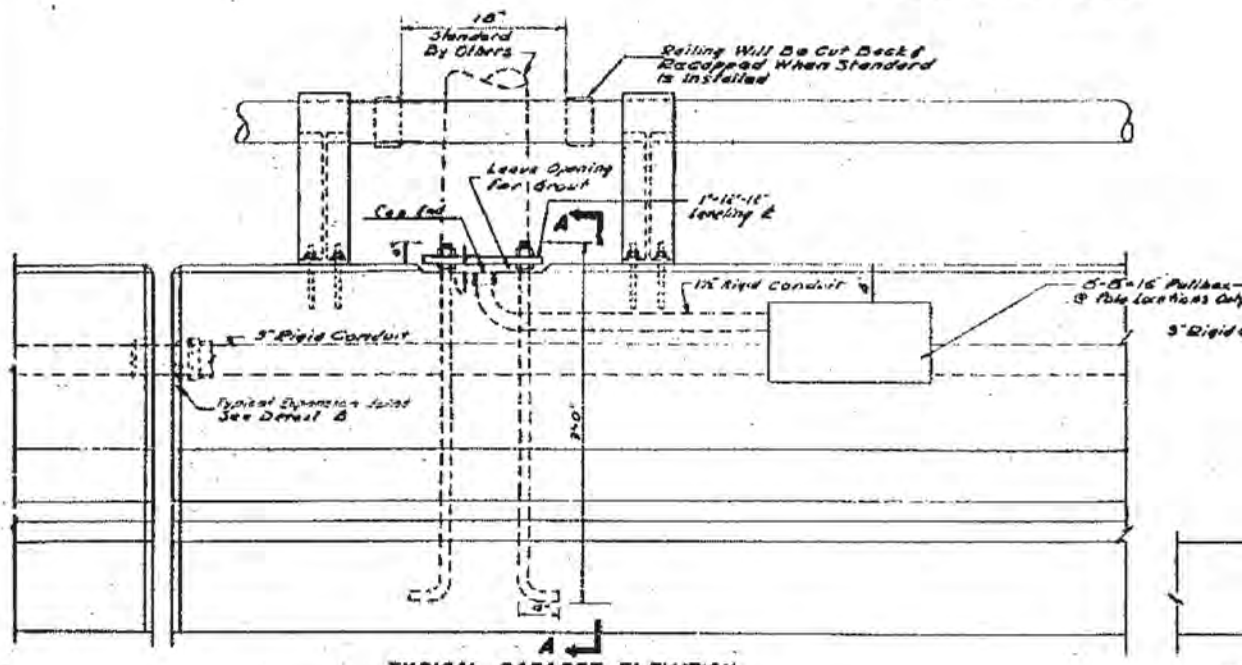


TYPICAL PARAPET ELEVATION AT BRIDGE DECK

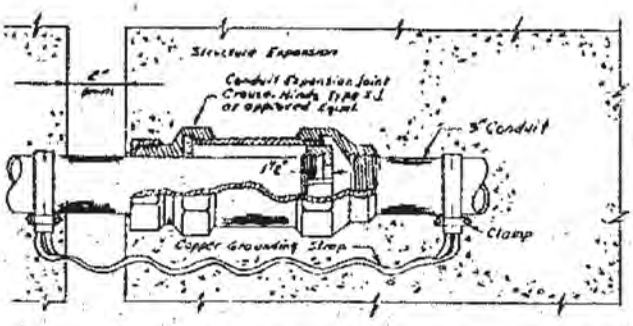


DETAIL B

CONDUIT EXPANSION FITTING DETAIL

NOTES:

1. CONDUITS ENT
DIRECTION OF THE RU
THE BOX IN ORDER TO

2. ANCHOR BOLTS
SUBSTANTIAL TEMPLA
BOLTS SHALL BE GALV
ACCEPT STANDARD
SECURELY WRAPPED

3. CONDUIT EXPAN
CONDUIT CROSSES.

4. ALL CONDUIT IN
HAVE A #10 GA. GALV.
LOOPED BACK AT

5. SAME DETAIL A

6. BRASS PLUGS
OPENINGS @ TOP

| FED. ROAD DIST. NO. | STATE | FED. AID PROJ. NO. | FISCAL YEAR | SHEET NO. | TOTAL SHEETS |
|---|---|---|---|---|---|
| UT | UTAH | E-15-8( ) | | | |

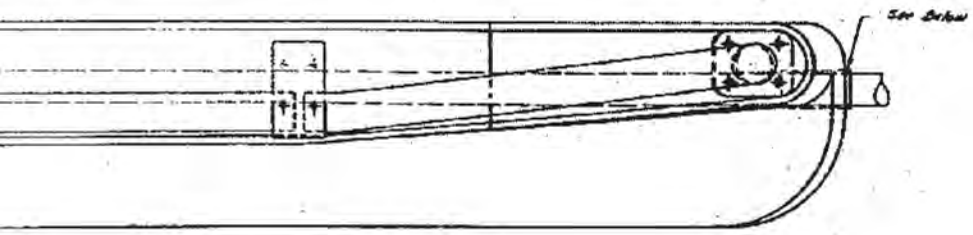


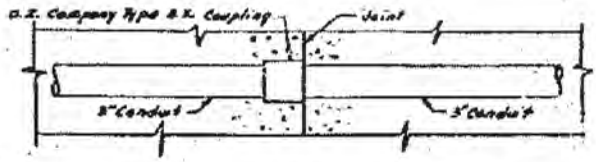


AT FIXED JOINT

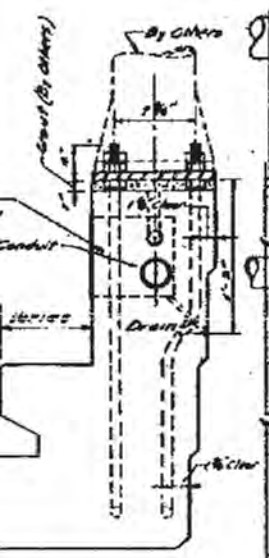


ECTION A-A

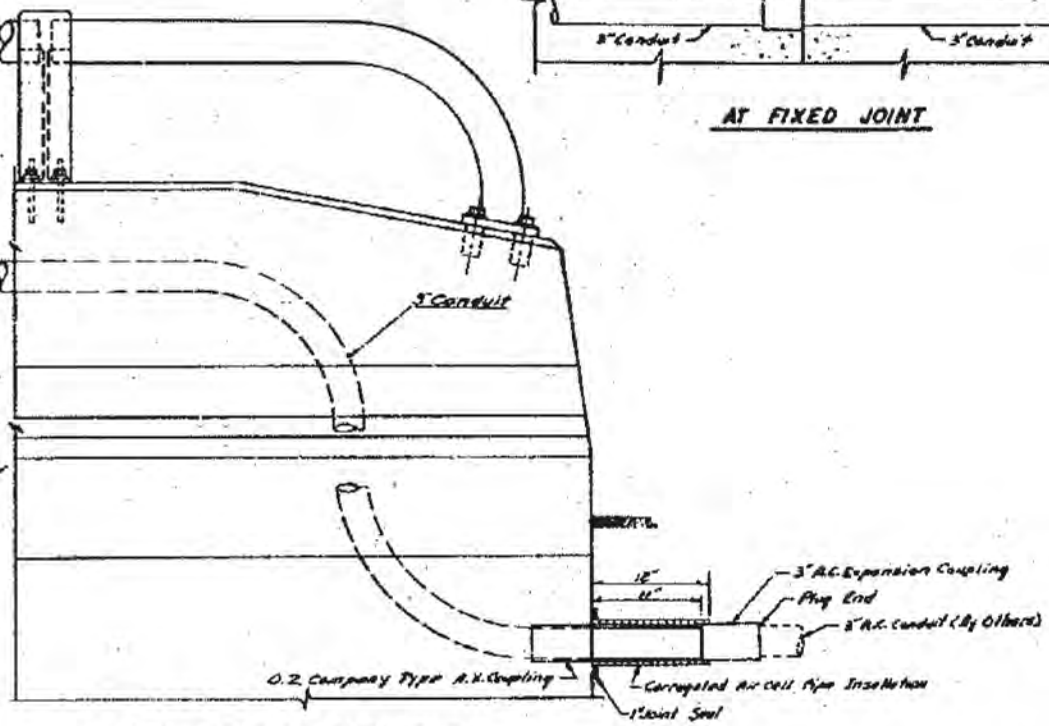


TYPICAL PARAPET ELEVATION
AT WINGWALL

**FOR INFORMATION ONLY**

ERING PULLBOXES SHALL ENTER FROM THE
AND SHALL TERMINATE CLOSE THE END OF
PROVIDE MAXIMUM CLEAR SPACE.

SHALL BE HELD IN POSITION BY MEANS OF
TES. NUTS AND THREADED END OF ANCHOR
NIZED OR CADMIUM-PLATED THREADS SHALL
UTS. EXPOSED PORTIONS OF NUTS & BOLTS SHALL BE
N BURLAP
SION FITTING SHALL BE INSTALLED WHEREVER
TRUCTURE AT EXPANSION JOINT.

WHICH NO. CABLE IS BEING INSTALLED SHALL
IRON PULL WIRE INSTALLED THERIN, WITH 6"
ONDUIT ENDS.

PPLY FOR DOUBLE-RAIL HANDRAIL.

ALL BE USED TO CAP RIGID CONDUIT AT
PARAPETS & AT ENDS OF WINGWALLS.

SHEET 1 OF 1 SHEETS

UTAH STATE ROAD COMMISSION
SALT LAKE CITY, UTAH
BRIDGE DEPARTMENT

**STANDARD OVERHEAD LIGHTING**

DESIGN AND DRAWING BY
WESTERN ENGINEERS, INC. AND
EDWARDS AND KELCEY
CONSULTING ENGINEERS

SUBMITTED BY _____ CHIEF ENGINEER
UTAH ENGR. LIC. NO. _____

DESIGNED BY E.J.K.
DRAWN BY E.H.
TRACED BY J.J.K.
CHECKED BY J.J.K.
DATE Oct. 1962
APPROVED Nov. 6, 1962
BRIDGE ENGINEER

E-C-342 | E-ST-5

19C

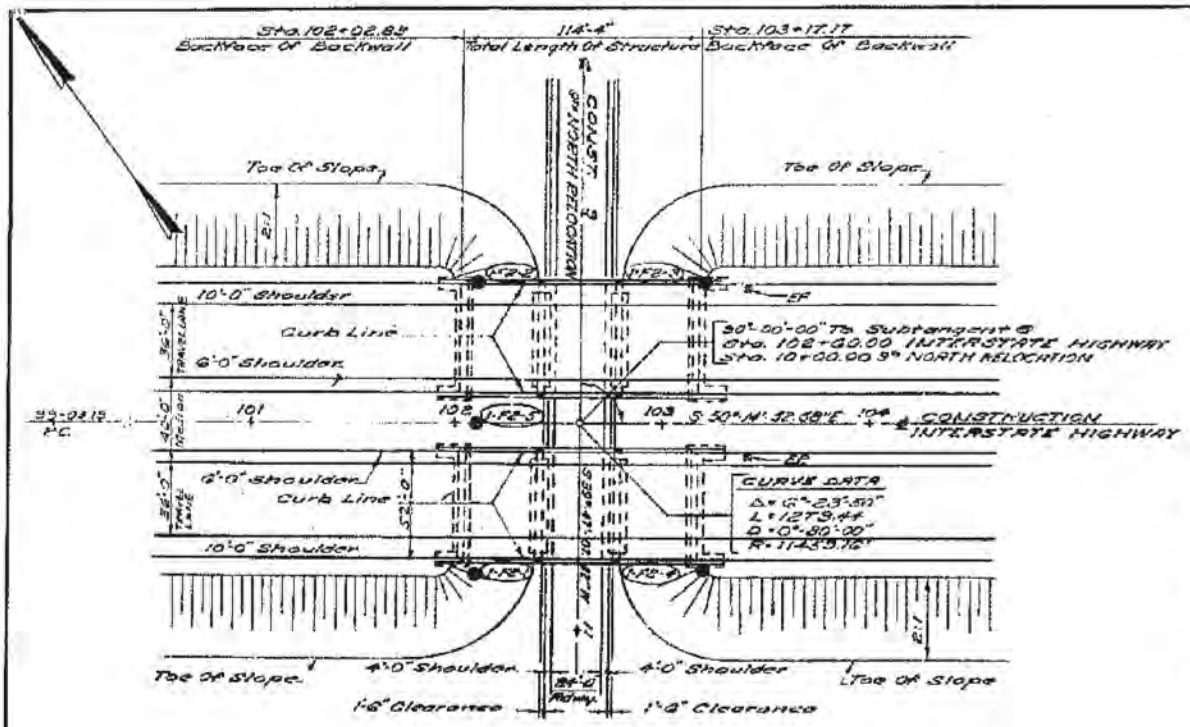


**KEY PLAN**

SCALE: 1"=40'

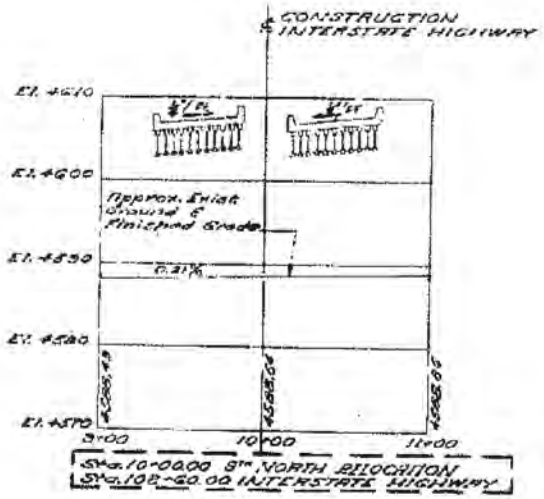


**9TH NORTH RELOCATION PROFILE**

SCALE: 1"=10' VERT.
1"=50' HOR

DESIGN SPECIFICATIONS:
AASHO Standard Specificatio
For Prestressed Concrete Bridges,

ALTERNATE DESIGN:
The Method Of Prestressing To B
Requirements Specified Or As Not

CONSTRUCTION SPECIFICATIONS
Materials, Construction, And
Standard Specifications For Roa
Thereto Which Are In Effect At T

LIVE LOAD:
H 20-S16-44 Interstate Altern
Specifications Of 1961

REINFORCEMENT:
All Reinforcing Steel Bars Sh
Designation M-31 And Shall Have Dea

PRESTRESSED BEAM DATA:
Ultimate 28 Day Cylinder Str
Ultimate Cylinder Strength
Initial Tensioning Load Per
Ultimate Prestressing Steel

HANDLING:
In The Handling Of Beams, The
Times And Must Be Picked Up Only
Beam. Disregard Of This Requiren

CONCRETE:
Class "A" Concrete And Type II Low
See Standard Specifications.

CHAMFERS:
Exposed Corners at joint filler and ope

FOUNDATIONS:
Foundations may be altered, if necessar

Shop Drawings
All Shop Drawing Be Approved b

DATUM:
All Elevations Refer To United

BENCH MARK:

**FOR INFORMATION ONLY**

| FED. ROAD DIST. NO. | STATE | FED. AID PROJ. NO. | FISCAL YEAR | SHEET NO. | TOTAL SHEETS |
|---|---|---|---|---|---|
| U T | UTAH | | | | |

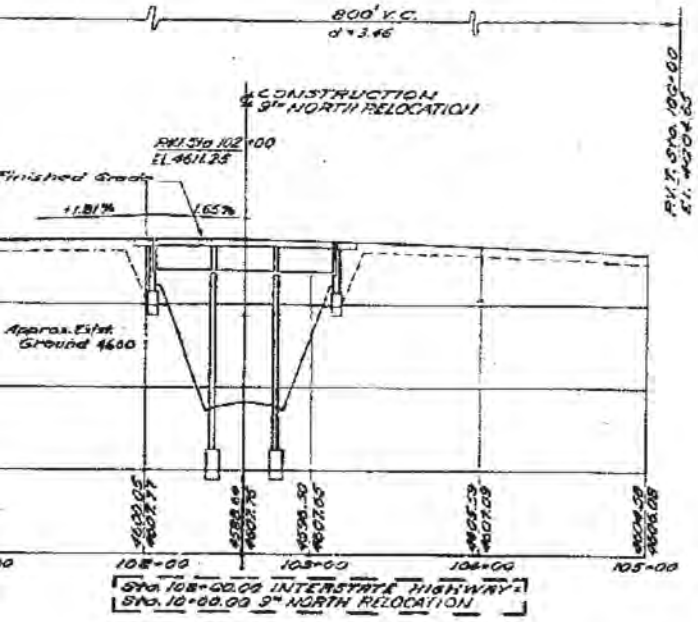


## INTERSTATE HIGHWAY PROFILE

SCALE: 1" = 10' VERT
1" = 50' HOR

## 2 STRUCTURES

### ESTIMATE OF QUANTITIES

| NO. | ITEM | QUANTITY | As Const. |
|---|---|---|---|
| | EXCAV. FOR STRUCTURES (UNCLASS) | 1 030 Cu.Yd | 1212.9 |
| | MECHANICAL TAMPING | 38 Hr | 128 |
| | REINF. CONC. SLOPE PROTECTION | 1085 Sq.Yd | 1053.1 |
| | STRUCTURAL STEEL | 5200 Lb | 5562 |
| | CLASS "A" CONCRETE (A.E.) | 1155 Cu.Yd | 1102.34 |
| | REINFORCING STEEL | 170555 Lb | |
| | | | |
| | | | |
| | PRESTRESSED CONCRETE MEMBER TYPE I 36"-3" | 44 Ea | |
| | PRESTRESSED CONCRETE MEMBER TYPE I 37"-6" | 22 Ea | |
| | METAL RAILING (SINGLE RAIL) | 552 Lin.Ft | 555.8 |
| | 3" RIGID STEEL CONDUIT | 300 Lin.Ft | |
| | ELASTOMERIC BRG PAD ¾" THICK | 108 Sq.Ft | |
| | ELECTRICAL WORK BRIDGES | 1 Lump | |
| | | | |

### STANDARD DRAWINGS

| SHEET NUMBER | DESCRIPTION |
|---|---|
| ST-1 | RAILING DETAILS |
| ST-6 | LIGHT DETAILS |
| MR-1 | METAL RAILING STD. |
| | |
| | |

### INDEX OF SHEETS



| SHEET NUMBER | DESCRIPTION |
|---|---|
| 1 | KEY PLAN & INDEX SHEET |
| 2 | DECK PLAN |
| 3 | BORING LOGS |
| 4 | FOUNDATION PLAN |
| 5 | ABUTMENT NO. 1 & NO. 2 |
| 6 | ABUTMENT NO. 3 & NO. 4 |
| 7 | PIERS |
| 8 | FRAMING PLAN |
| 9 | TRANSVERSE SECTION |
| 10 | MISC. DETAILS |
| 11 | REINFORCING SCHEDULE |
| 12 | REINF. CONC. SLOPE PROT. |
| 13 | SCREED ELEVATIONS |
| 13a | ELECTRICAL WORK BRIDGES |
| | |



## GENERAL NOTES

ns For Highway Bridges 1961 Editions And Supplements Thereto
Type I R.B.S.H.O. Standards Beam Section

e Used Shall Be Optional With The Contractor Subject To All
ed On These Plans
t:
Workmanship Shall Be In Accordance With The State
d And Bridge Construction, 1960 Edition And Supplements
The Date Of Request For Bids.

nate Loading In Accordance With The A.H.S.H.O

ell Be Of New Billet Steel Intermediate Grade Steel, Conforming To A.A.S.H.O
ormations Conforming To A.A.S.H.O Designation M-31

ength Of Concrete 5,000 p.s.i.
Of Concrete At Time Of Prestress 4,000 p.s.i.
¾" Strand 14,000 lbs.
Strength 250,000 p.s.i.

y Must Be Maintained In An Upright Position At All
ytimes Of Approved Devices Anchored Within The
ment May Result In Collapse Of The Member.

Alkali Cement Shall Be Used Throughout, Except Prestressed Beams

joints to be beveled ¾" or rounded.

y, to suit conditions encountered in construction.

Factor Fabrication Of Girders

d States Coast And Geodetic Survey Mean Sea Level Datum of 1929

REGISTERED PROFESSIONAL ENGINEER NO. 2164 J. R. NEWBILL STATE OF UTAH

## KEY PLAN & INDEX SHEET

SHEET 1 OF 13 SHEETS

UTAH STATE ROAD COMMISSION
SALT LAKE CITY, UTAH
BRIDGE DEPARTMENT

LEHI 9TH NORTH
RELOCATION OVERPASS
114'-4" O. TO O.

STA. 102+60.00 LEHI-PROVO
I-15-E(102)276 UTAH COUNTY

DESIGN AND DRAWING BY
WESTERN ENGINEERS, INC. AND
EDWARDS AND KELCEY
CONSULTING ENGINEERS

SUBMITTED BY CHIEF ENGINEER
UTAH ENGR. LIC. NO. 2164

STRUCTURE 1-F2

FINAL 2-24-64

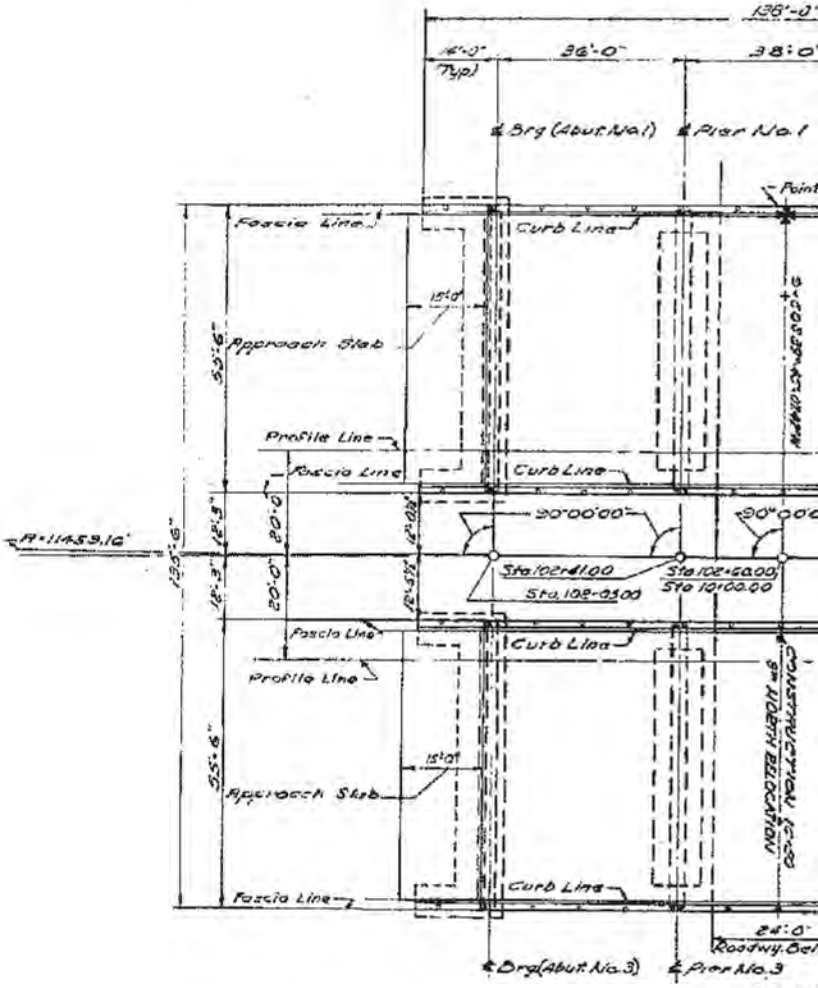


**PLAN**

SCALE: 1/16" = 1'

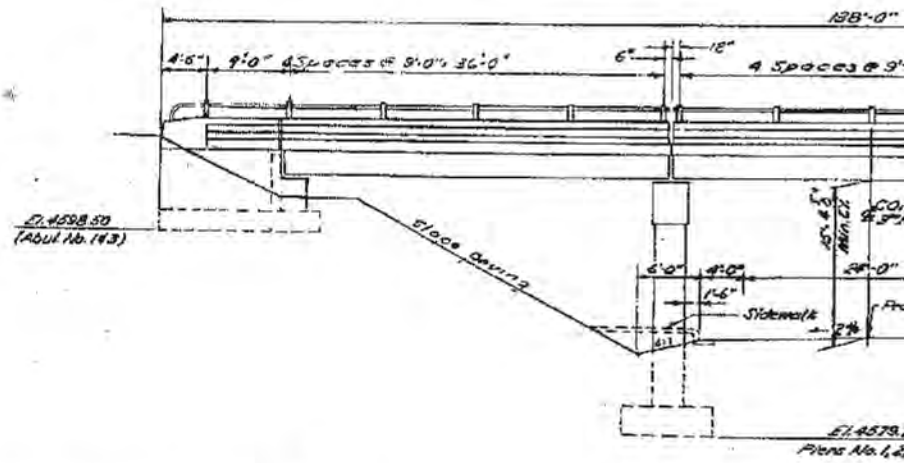


**ELEVATION**

SCALE: 1/8" = 1'-0"

**FOR INFORMATION ONLY**

23

| FED. ROAD DIST. NO. | STATE | FED. AID PROJ. NO. | FISCAL YEAR | SHEET NO. | TOTAL SHEETS |
|---|---|---|---|---|---|
| U 7 | UTAH | | | | |

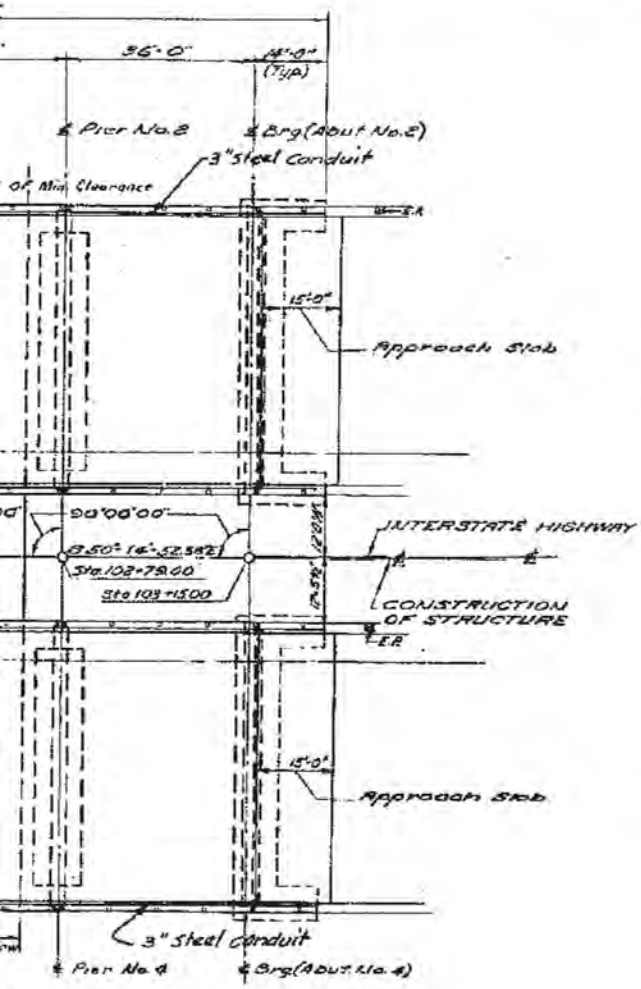


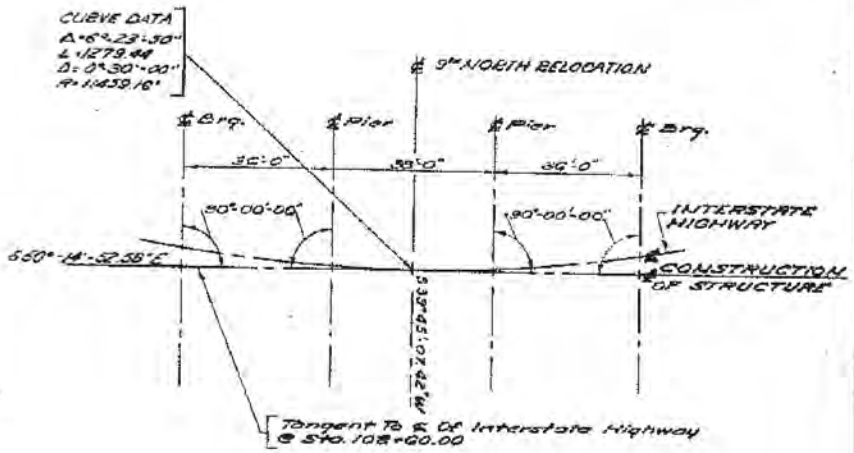


## CONSTRUCTION LAYOUT

SCALE: NOT TO SCALE

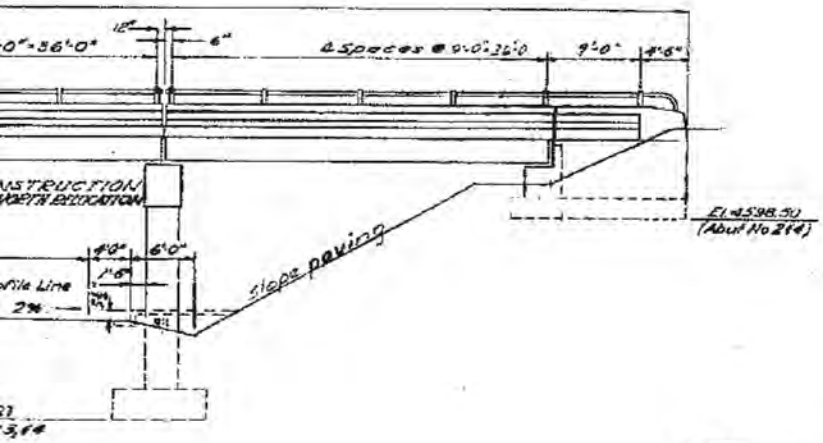


NOTES:
FOR RAILING DETAILS SEE DRG. NO. ST-1

## DECK PLAN

SHEET 2 OF 13 SHEETS

UTAH STATE ROAD COMMISSION
SALT LAKE CITY, UTAH
BRIDGE DEPARTMENT

**LEHI 9TH NORTH RELOCATION OVERPASS**
**114'-4" O. TO O.**

STA. 102+60.00 — I-15-6(98)276
LEHI - PROVO — UTAH COUNTY

DRAWN BY K.Y. — SCALE AS NOTED
DESIGN BY T.Q.
TRACED BY
CHECKED BY Y.S.

No. F-9

DESIGN AND DRAWING BY
WESTERN ENGINEERS, INC. AND
EDWARDS AND KELCEY
CONSULTING ENGINEERS

SUBMITTED BY ____ CHIEF ENGINEER
UTAH ENGR. LIC. NO. 2164

NO. 2164 — J. R. BOWDLE — UTAH

REVISIONS

STRUCTURE I-FE

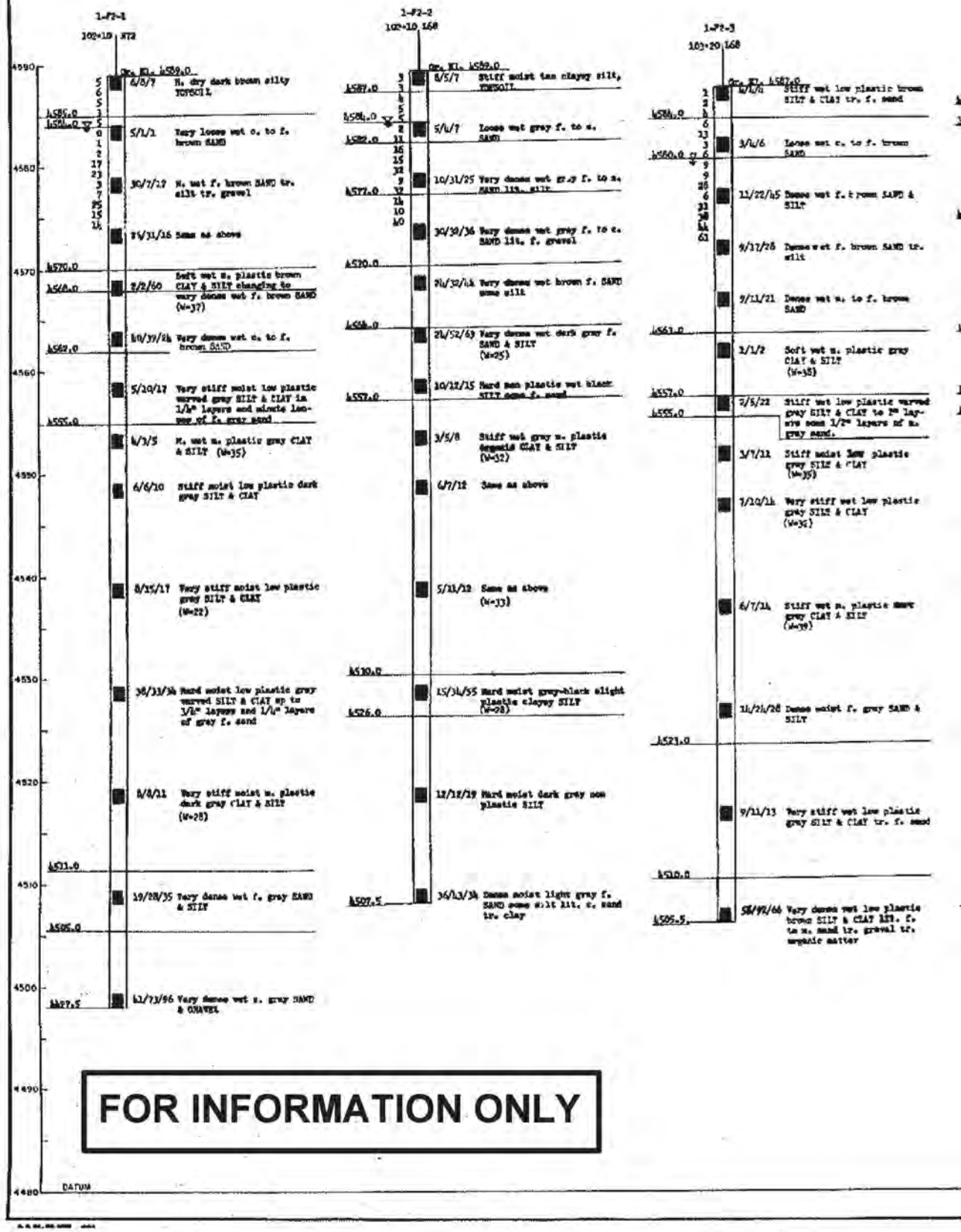


**FOR INFORMATION ONLY**

| FED. HIGHWAY DIVISION | STATE | FED. AID PROJ. NO. | | | |
|---|---|---|---|---|---|
| UT | UTAH | | | | |

24

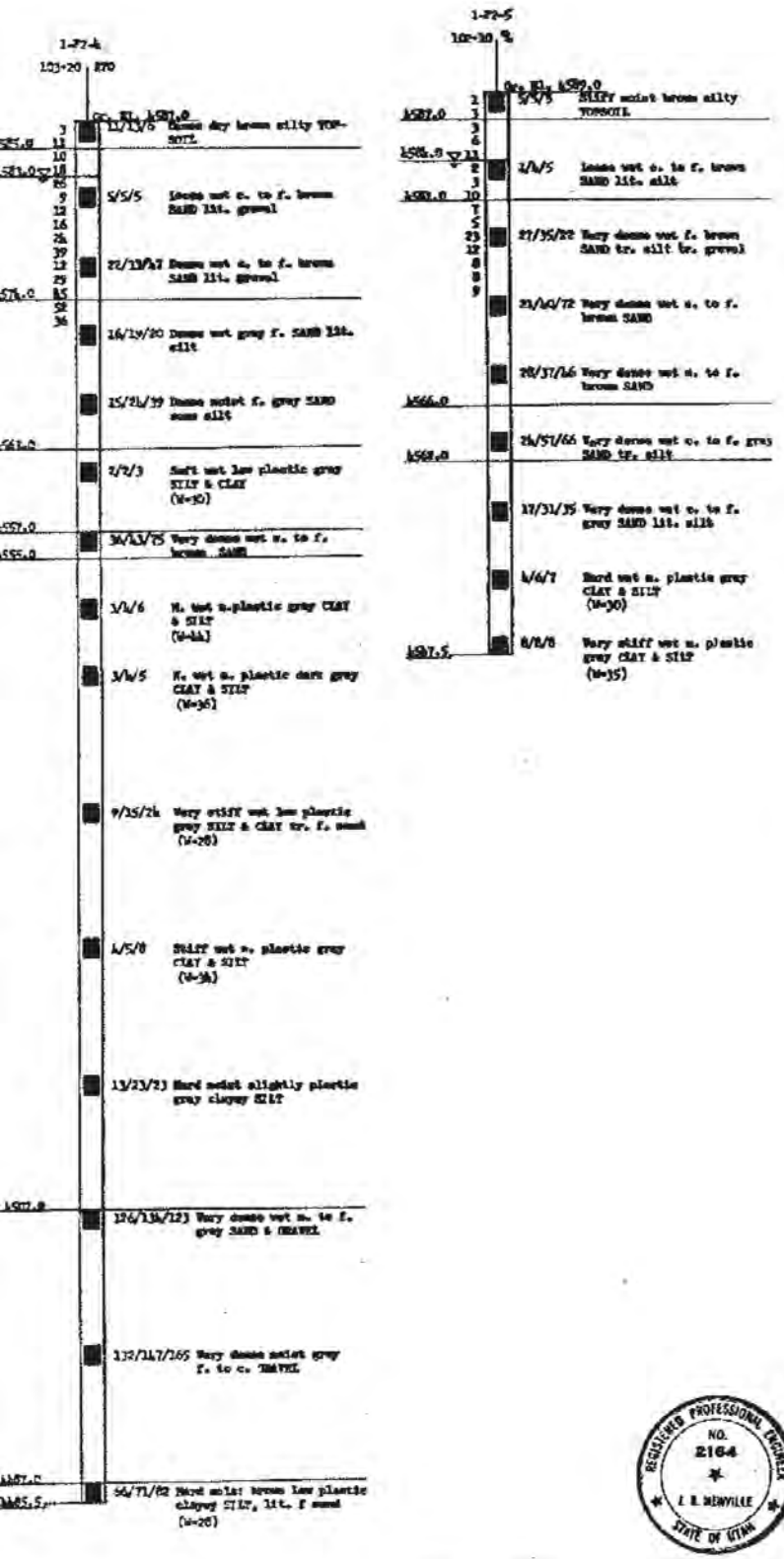


## LEGEND

Boring No. — 1-4-1

Interstate Station — 22+63 — 272 — Offset

Ground Elevation — Gr. El. 4562

Ground Water Table Elevation — 4557.3

Number of Blows Used to drive casing 12 inches with 300 lb. hammer falling 2 ft. (Typical)

Strata Change Elevation (Typical) — 4550

Boring Advanced Without Casing

Location of Sample (Typical) — 4539

Bottom of Boring Elevation — 4535.5

Number of Blows Used to drive 1-3/8" I.D. sampler with 140 lb. hammer falling 30 inches — 1st. 6 inches, 2nd. 6 inches, 3rd. 6 inches

2/4/5 Stiff m. plastic brown clay some silt-TOPSOIL

11/13/17 M. dense wet tan m. to c. SAND, some silt, tr. f. gravel

15/21/30 Dense wet tan m. to c. SAND, some gravel

7/6/8 Stiff, low plastic brown CLAY & SILT, tr. f. sand (LL = 40, PL = 28, W = 32)

11/14/21 Very stiff, plastic gray CLAY & SILT, tr. f. sand (W = 35, qu = 17/ft.)

9/12/20 Very stiff varved plastic gray silty CLAY & f. silty SAND

visual soil description for each sample and results of classification tests, if any (Typical)

ABBREVIATIONS IF AND WHEN USED:

br. = brown
gr. = gray
org. = organic
f. = fine
v. f. = very fine
m. = medium
c. = coarse
sm. = some
tr. = trace
lit. = little
LL = Liquid Limit in %
PL = Plastic Limit in %
W = Natural Moisture Content in %
qu = Unconfined compression test from pocket penetrometer in T/ft.²

## BORING LOGS

SHEET 3 OF 13 SHEETS

UTAH STATE ROAD COMMISSION
SALT LAKE CITY, UTAH
BRIDGE DEPARTMENT

LEHI 9TH NORTH
RELOCATION OVERPASS
114'-4" O. TO O.

STA. 102+60.00 I-15-6(9)274
LEHI-PROVO UTAH COUNTY

DESIGNED BY F.E.K. SCALE AS NOTED
DRAWN BY F.E.K.
TRACED BY F.E.K.
CHECKED BY F.E.K.

DESIGN AND DRAWING BY
WESTERN ENGINEERS, INC. AND
EDWARDS AND KELCEY
CONSULTING ENGINEERS

REGISTERED PROFESSIONAL ENGINEER NO. 2164 J. R. MENVILLE STATE OF UTAH

SUBMITTED BY J. R. Menville CHIEF ENGINEER
UTAH CORP. LIC. NO. 2164

No. F-9

STRUCTURE 1-F2

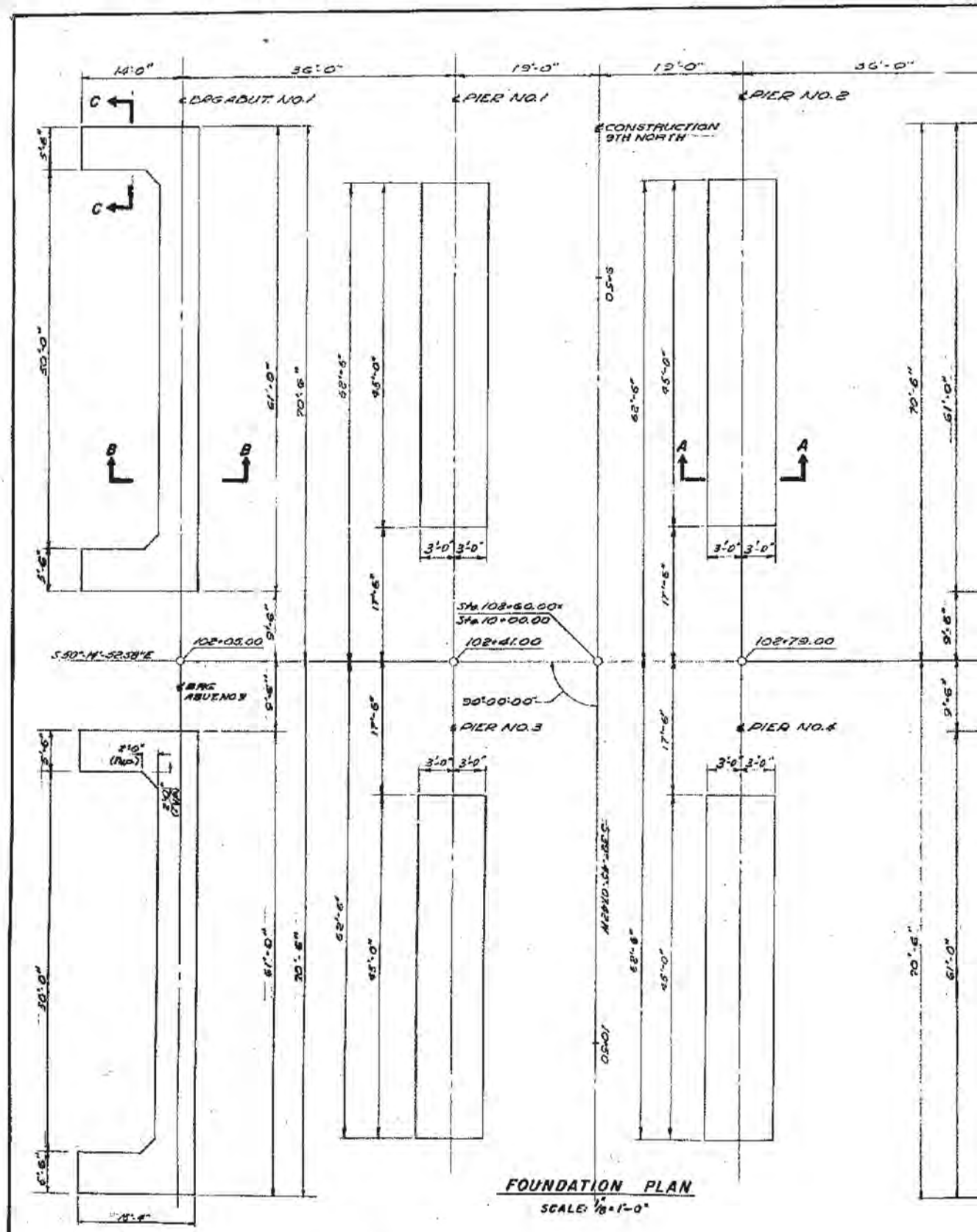
14'-0"
36'-0"
19'-0"
19'-0"
36'-0"
℄ ABUT. NO.1
℄ PIER NO.1
℄ PIER NO.2
℄ CONSTRUCTION 9TH NORTH
C
B
A
50'-0"
5'-6"
61'-0"
70'-6"
62'-6"
45'-0"
17'-6"
3'-0"
9'-6"
Sta. 108+60.00
Sta. 10+00.00
102+05.00
102+41.00
102+79.00
S 60°-14'-52.38"E
℄ BRG. ABUT. NO.2
90°00'00"
℄ PIER NO.3
℄ PIER NO.4
2'-0" (TYP)
N 29°10'-54.88"E
0.5%
FOUNDATION PLAN
SCALE: 1/8" = 1'-0"

25

| FED. ROAD DIST. NO. | STATE | FED. AID PROJ. NO. | PARENT PROJ. | SHEET NO. | TOTAL SHEETS |
|---|---|---|---|---|---|
| U T | UTAH | | | | |

**FOR INFORMATION ONLY**

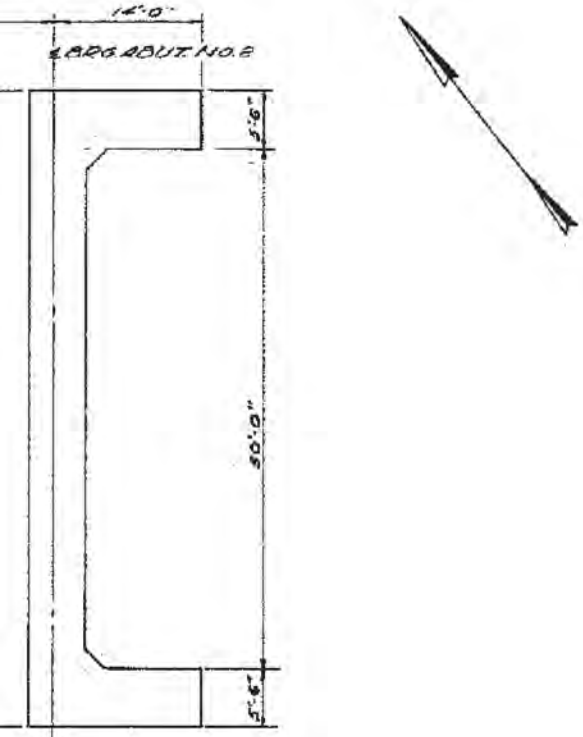


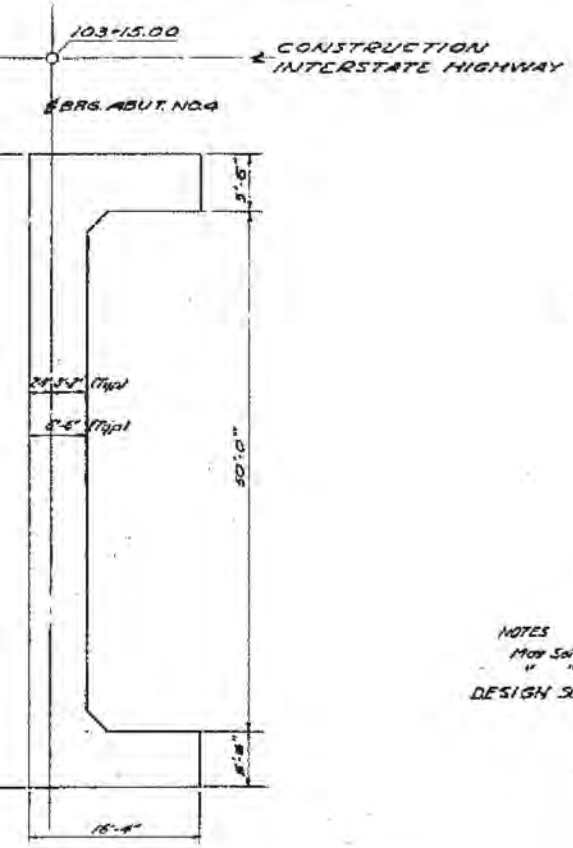


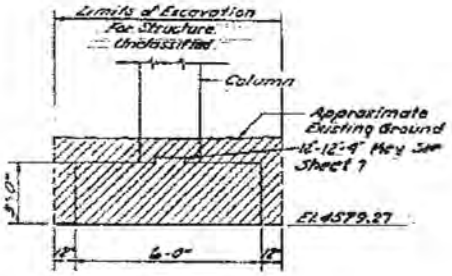


**SECTION A-A**
SCALE 1/4" = 1'-0"

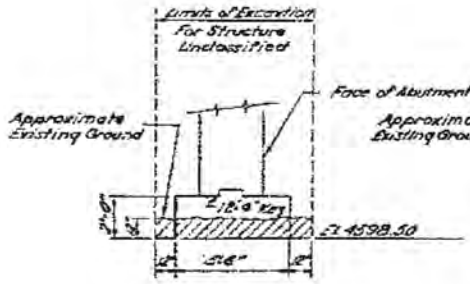


**SECTION B-B**
SCALE 1/4" = 1'-0"

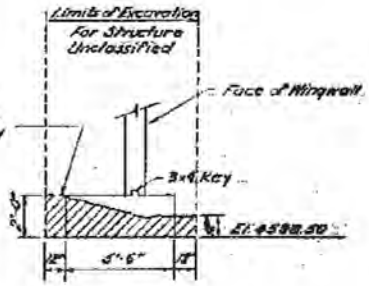


**SECTION C-C**
SCALE 1/4" = 1'-0"

NOTES
Max Soil Pressure Abut. 1.52 Tons/SF
" " " Piers 1.40 Tons/SF
DESIGN SOIL PRESSURE 2 TONS/SQFT MAX.

**FOUNDATION PLAN**

SHEET 4 OF 12 SHEETS

DESIGN AND DRAWING BY
WESTERN ENGINEERS, INC. AND
EDWARDS AND KELCEY
CONSULTING ENGINEERS

SUBMITTED BY [signature] CHIEF ENGINEER
UTAH ENGR. LIC. NO. 2164

UTAH STATE ROAD COMMISSION
SALT LAKE CITY, UTAH
BRIDGE DEPARTMENT

**LEHI 9TH NORTH RELOCATION OVERPASS**
114'-4" O. TO O.
STA. 102+60.00 I-15-6(38)276
LEHI-PROVO UTAH COUNTY

DESIGNED BY KV SCALE AS NOTED
DRAWN BY E.Q. DATE
TRACED BY APPROVED
CHECKED BY R.J.B. CHIEF BRIDGE ENGINEER

NO. NO. DWG. NO. F-9

STRUCTURE 1-F2

FOR

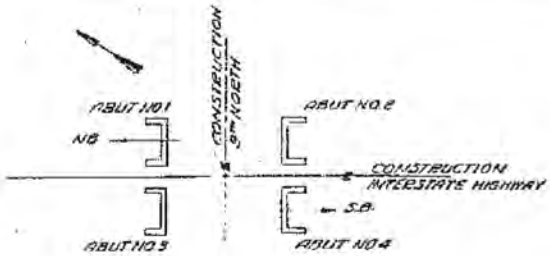


KEY PLAN
SCALE: 1" = 100'

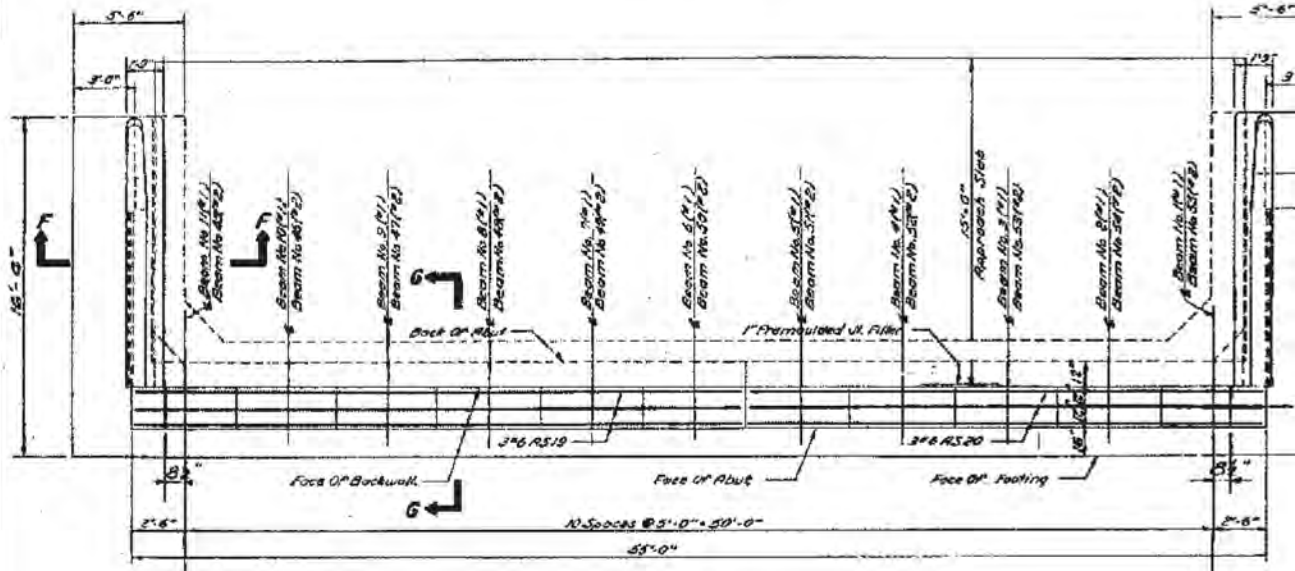


PLAN
SCALE: 1/4" = 1'-0"

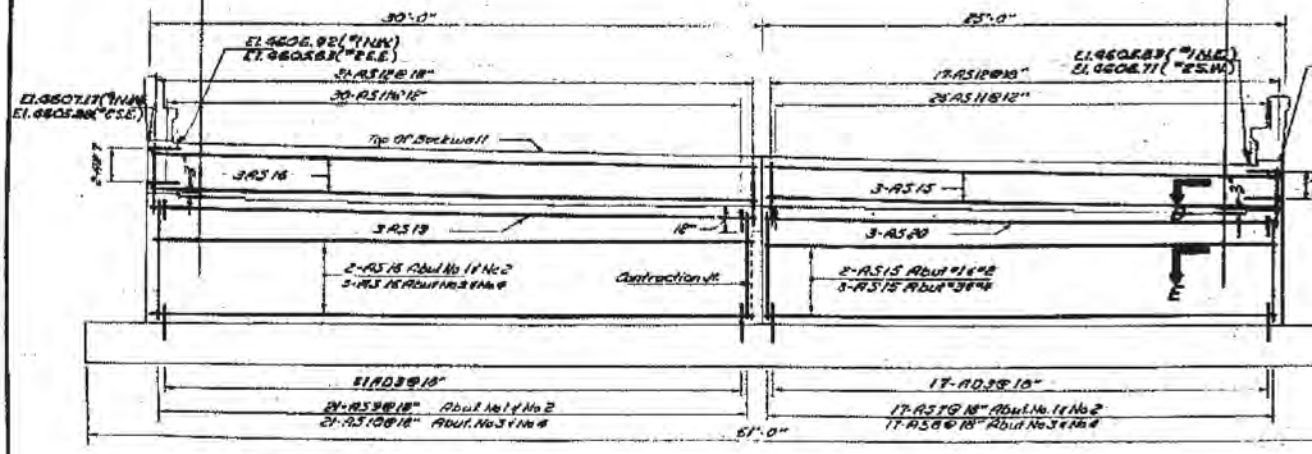


REINFORCEMENT FRONT FACE
ELEVATION
SCALE: 1/4" = 1'-0"

NOTE:
FOR ABUTMENTS NO. 2 & NO. 4,
STEEL IS SEEN FROM BACKFA

**INFORMATION ONLY**



| FED. ROAD DESIG. NO. | STATE | FED. AID PROJ. NO. | PROJECT NO. | SHEET NO. | TOTAL SHEETS |
|---|---|---|---|---|---|
| U 9 | UTAH | | | | |

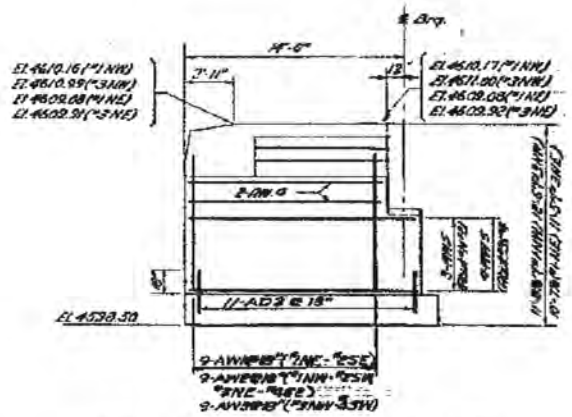


**REINFORCEMENT FRONT FACE**

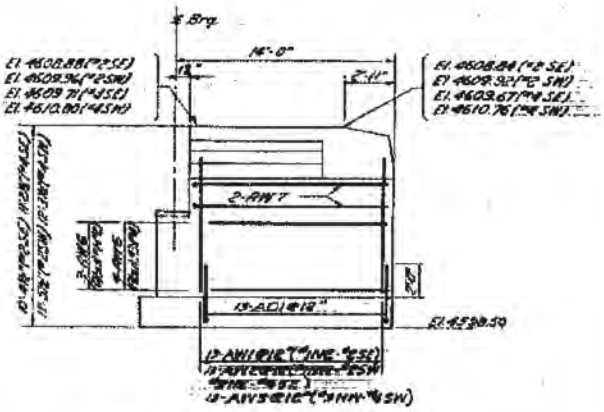


**REINFORCEMENT BACK FACE**

**ELEVATION OF WINGWALLS**

SCALE: 3/16" = 1'-0"

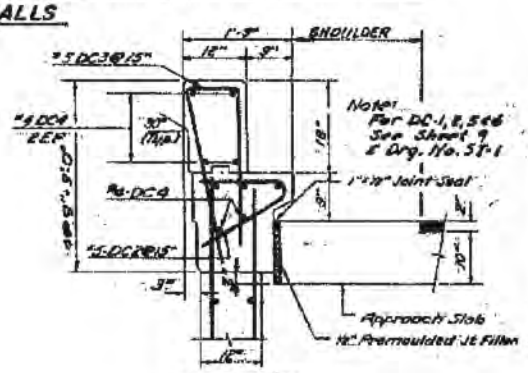


**DETAIL "B"**

SCALE: 3/4" = 1'-0"

| NORTHBOUND | | ROADWAY | |
|---|---|---|---|
| BEAM NO. | ELEVATION ABUT. NO. 1 | BEAM NO. | ELEVATION ABUT. NO. 2 |
| 1 | 4602.63 | 45 | 4603.43 |
| 2 | 4603.73 | 46 | 4602.53 |
| 3 | 4603.84 | 47 | 4602.64 |
| 4 | 4603.96 | 48 | 4602.74 |
| 5 | 4604.04 | 49 | 4602.85 |
| 6 | 4604.15 | 50 | 4603.95 |
| 7 | 4604.25 | 51 | 4604.06 |
| 8 | 4604.36 | 52 | 4604.16 |
| 9 | 4604.46 | 53 | 4604.26 |
| 10 | 4604.56 | 54 | 4604.37 |
| 11 | 4604.67 | 55 | 4604.47 |

**ABUTMENTS NO. 1 & NO. 2**

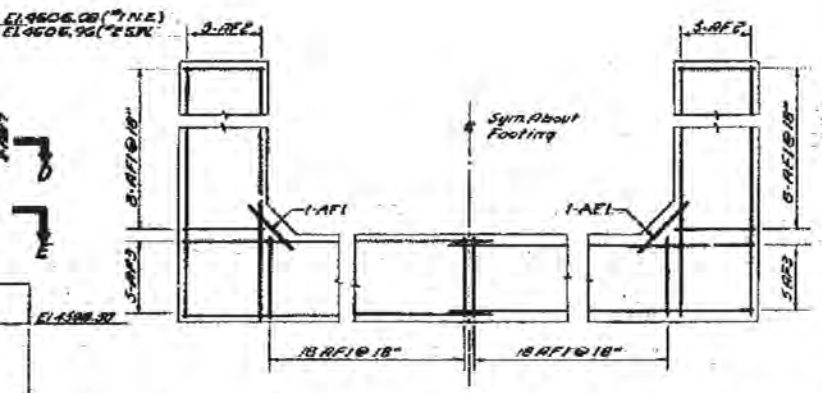


**REINFORCEMENT BOTTOM** **REINFORCEMENT TOP**

**PLAN OF FOOTING**

SCALE: 3/16" = 1'-0"

FOR FOOTING LOCATION PLAN SEE SHEET 8.
FOR SECTIONS E-E, F-F, G-G, C-D, D-E, E-E, AND CONTRACTION JT. SEE SHEET 6.

REGISTERED PROFESSIONAL ENGINEER NO. 2164 J. R. NEWVILLE STATE OF UTAH

DESIGN AND DRAWING BY
WESTERN ENGINEERS, INC. AND
EDWARDS AND KELCEY
CONSULTING ENGINEERS

SUBMITTED BY: J. R. Newville, CHIEF ENGINEER
UTAH ENGR. LIC. NO. 2164

SHEET 5 OF 13 SHEETS

UTAH STATE ROAD COMMISSION
SALT LAKE CITY, UTAH
BRIDGE DEPARTMENT

**LEHI 9TH NORTH RELOCATION OVERPASS**
114'-4" O. TO TO.
STA. 102+60.00 I-15-6(18)276
LEHI-PROVO UTAH COUNTY

DESIGNED BY: KY
DRAWN BY: O.E.
TRACED BY:
CHECKED BY: R.I.P.
SCALE: AS NOTED
DATE: Oct. 11, 1965
APPROVED: 7-24-3 Aug. 8
DWG. NO. F-9

STRUCTURE 1-F2

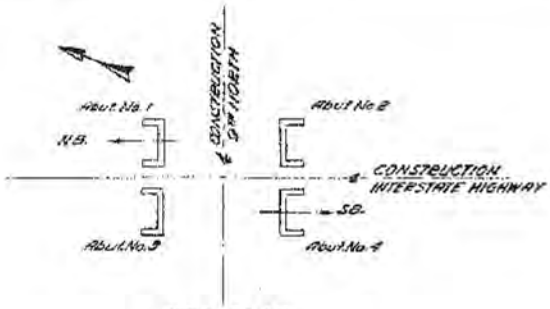


**KEY PLAN**
SCALE: 1" = 100'

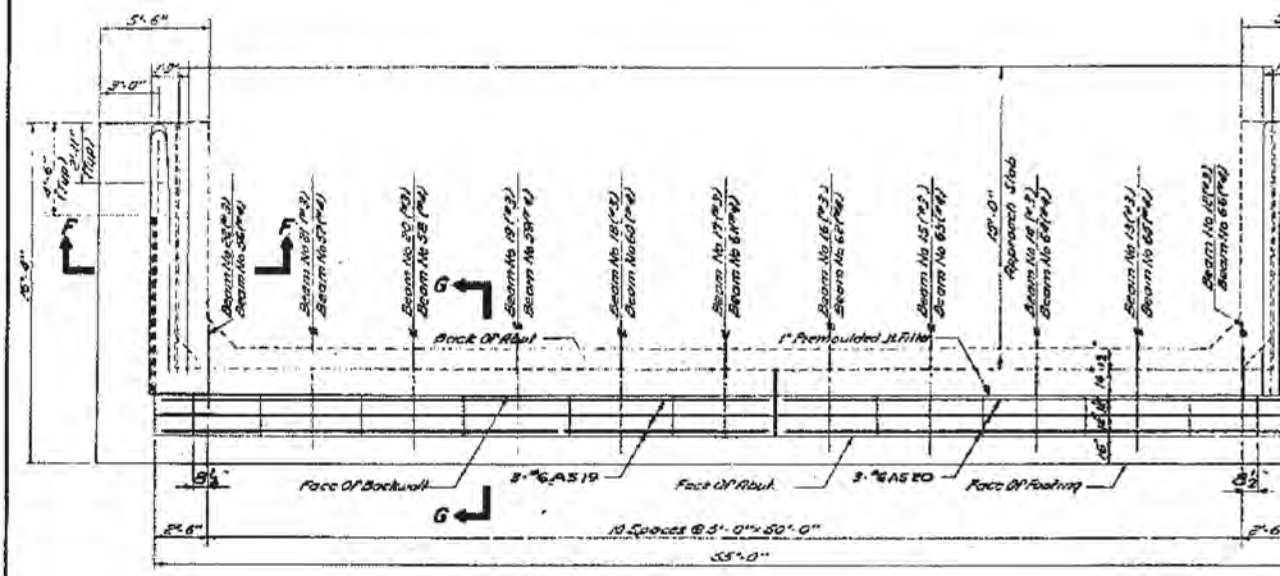


**PLAN**
SCALE: 1/4" = 1'-0"

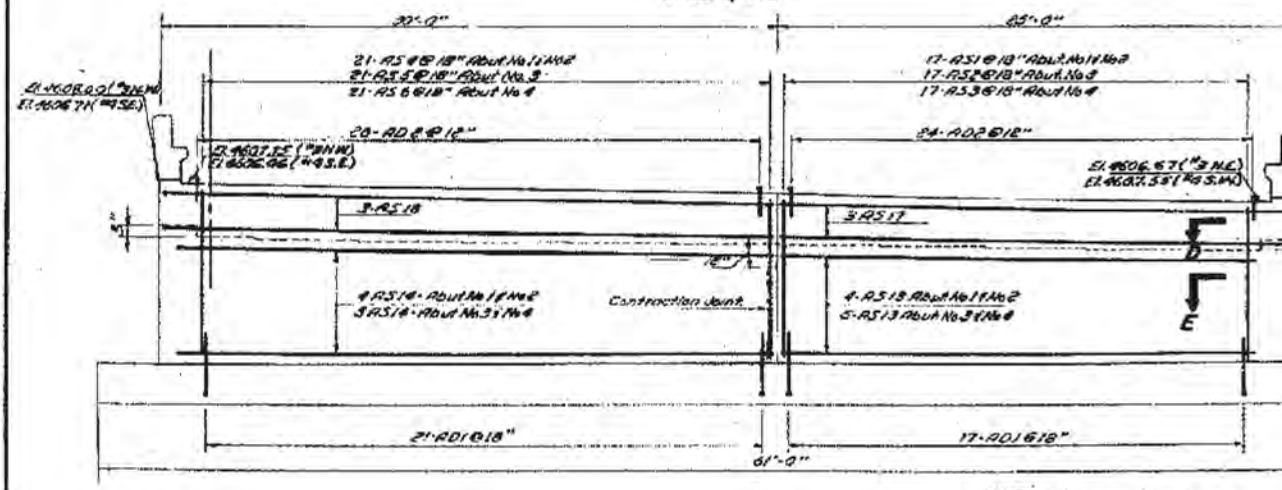


NOTE:
FOR ABUTMENTS NO. 2 & NO. 4, REIN
STEEL IS SEEN FROM BACKFAC

**REINFORCEMENT BACK FACE**
**ELEVATION**
SCALE: 1/4" = 1'-0"

**FOR INFORMATION ONLY**

| FED. ROAD DIST. NO. | STATE | FED. AID PROJ. NO. | FINAL PLANS | SHEET NO. | TOTAL SHEETS |
|---|---|---|---|---|---|
| U T | UTAH | | | | |

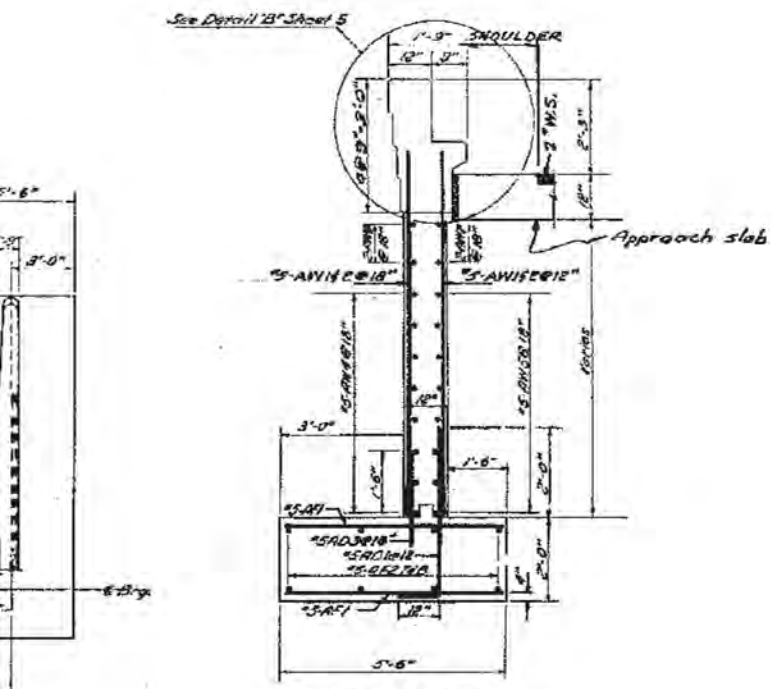


SECTION F-F
SCALE: 1/2" = 1'-0"

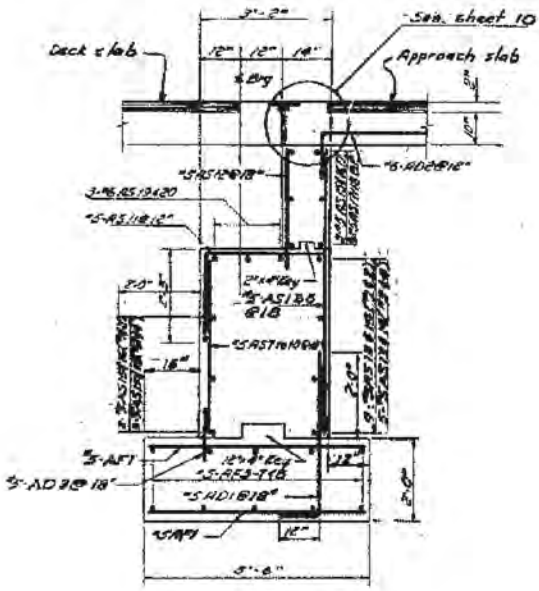


SECTION G-G
SCALE: 1/2" = 1'-0"

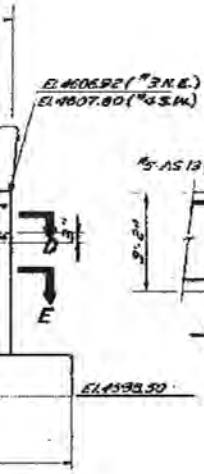


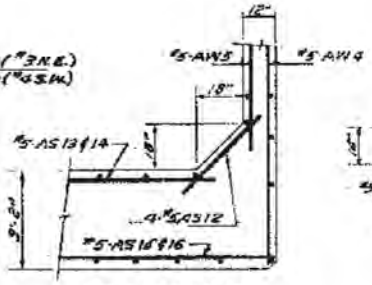


SECTION E-E
SCALE 3/8" = 1'-0"

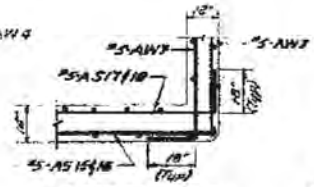


SECTION D-D
SCALE: 3/8" = 1'-0"

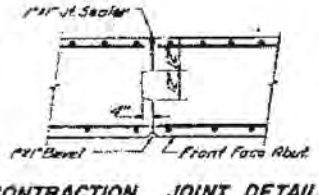


CONTRACTION JOINT DETAIL
SCALE: 3/8" = 1'-0"

SOUTHBOUND BOARDWAY

| BEAM NO. | ELEVATION ABUT. NO. 3 | BEAM NO. | ELEVATION ABUT. NO. 4 |
|---|---|---|---|
| 12 | 4604.46 | 56 | 4604.26 |
| 13 | 4604.56 | 57 | 4604.37 |
| 14 | 4604.67 | 58 | 4604.47 |
| 15 | 4604.77 | 59 | 4604.58 |
| 16 | 4604.88 | 60 | 4604.68 |
| 17 | 4604.98 | 61 | 4604.78 |
| 18 | 4605.09 | 62 | 4604.89 |
| 19 | 4605.19 | 63 | 4604.99 |
| 20 | 4605.29 | 64 | 4605.10 |
| 21 | 4605.40 | 65 | 4605.20 |
| 22 | 4605.50 | 66 | 4605.31 |

NOTES:
FOR FOOTING LOCATION PLAN SEE SHEET 4
FOR WINGWALL ELEVATIONS, FOOTING REINFORCEMENT SEE SHEET 5

ABUTMENTS NO. 3 & NO. 4

SHEET 6 OF 13 SHEETS

UTAH STATE ROAD COMMISSION
SALT LAKE CITY, UTAH
BRIDGE DEPARTMENT

LEHI 9TH NORTH
RELOCATION OVERPASS
114' 4" O TO O.
STA. 102+ 86.00 I-15-6(88)276
LEHI-PROVO UTAH COUNTY

DESIGN AND DRAWING BY
WESTERN ENGINEERS, INC. AND
EDWARDS AND KELCEY
CONSULTING ENGINEERS

REGISTERED PROFESSIONAL ENGINEER NO. 2164 J. R. NEWALL STATE OF UTAH

SUBMITTED BY: CHIEF ENGINEER
UTAH ENGR. LIC. NO. 2165

DRAWN BY: K.Y. SCALE: AS NOTED
TRACED BY: G.E.
CHECKED BY: R.J.R.

F-9

STRUCTURE 1-F2

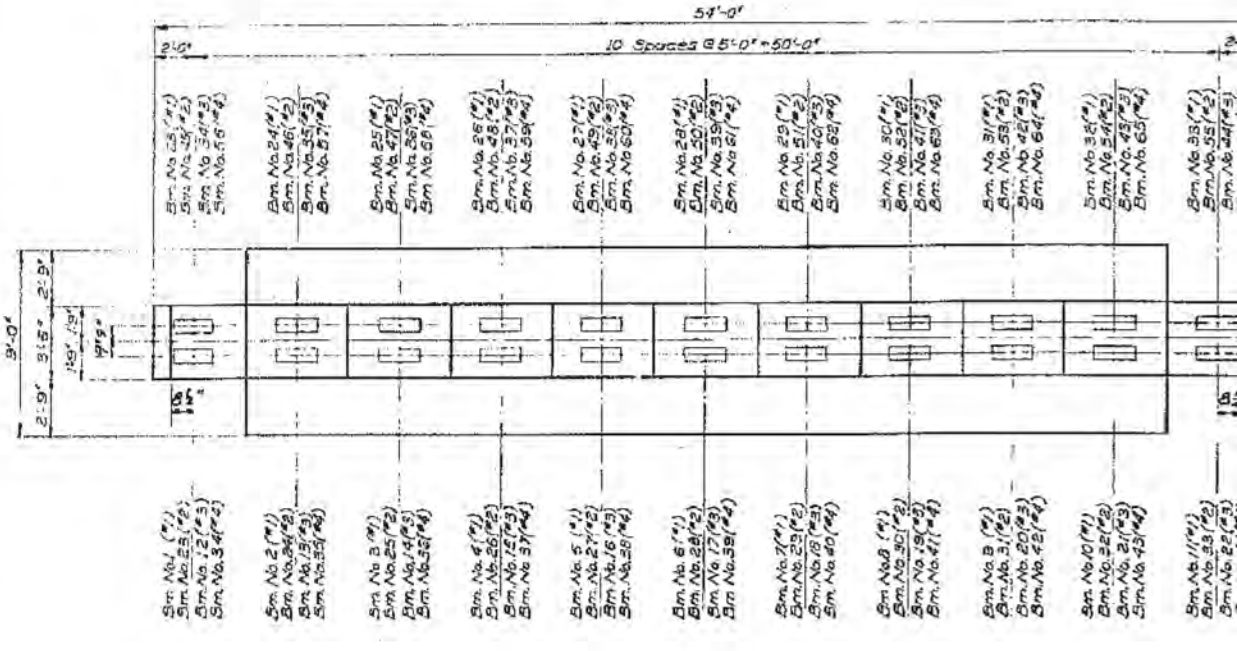


**PLAN**
SCALE: 1/4" = 1'-0"

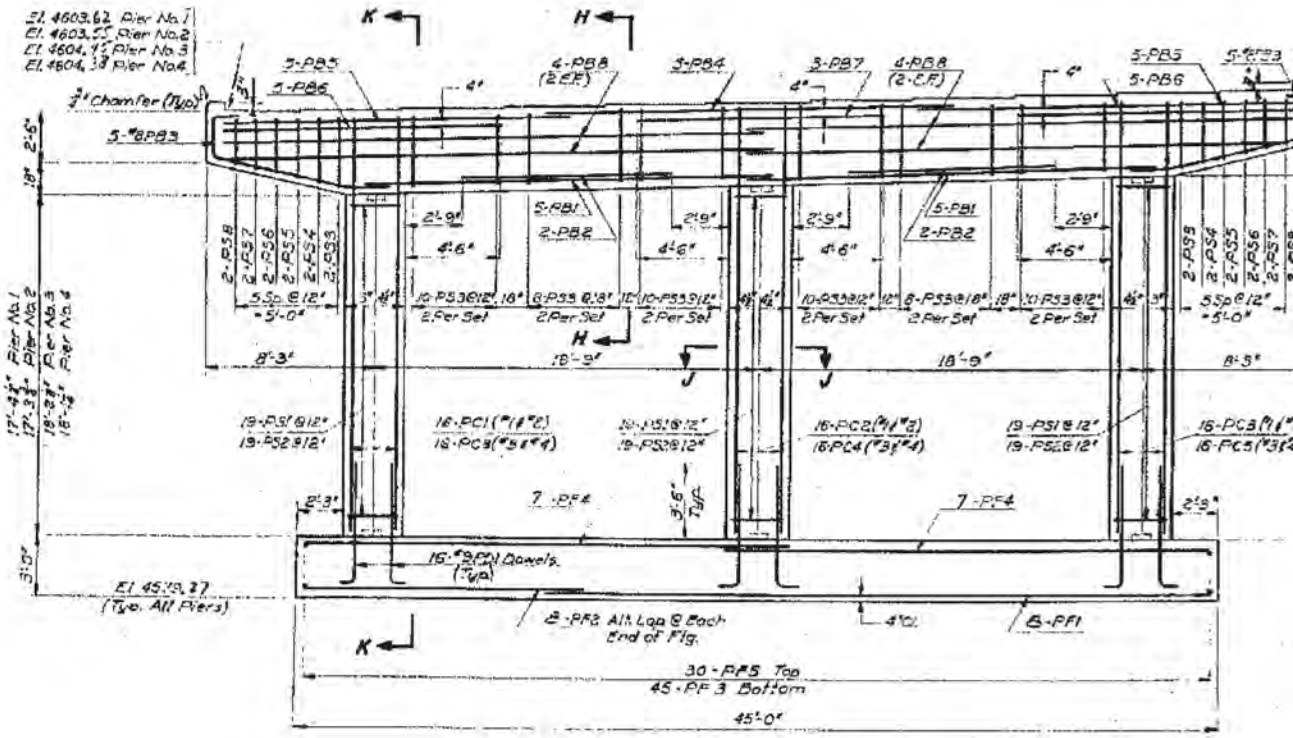


**PIER ELEVATION**
SCALE: 1/4" = 1'-0"

**FOR INFORMA**

| FED.ROAD DIST. NO. | STATE | FED. AID PROJ. NO. | TOTAL SHEETS | SHEET NO. | TOTAL SHEETS |
|---|---|---|---|---|---|
| UT | UTAH | | | 28 | |

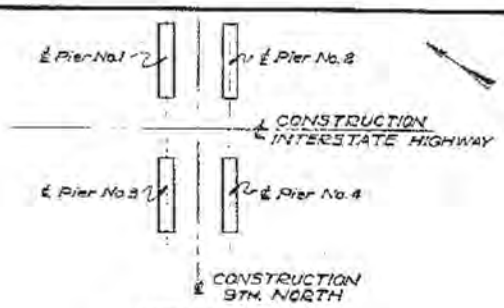


**KEY PLAN**
SCALE: 1"=50'

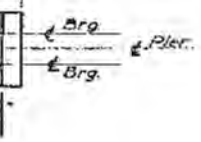


**NORTHBOUND ROADWAY**

| BEAM No. | SEAT ELEVATION PIER No.1 | BEAM No. | SEAT ELEVATION PIER No.2 |
|---|---|---|---|
| 1 | 4603.62 | 23 | 4603.55 |
| 2 | 4603.72 | 24 | 4603.66 |
| 3 | 4603.83 | 25 | 4603.76 |
| 4 | 4603.93 | 26 | 4603.87 |
| 5 | 4604.04 | 27 | 4603.97 |
| 6 | 4604.14 | 28 | 4604.07 |
| 7 | 4604.25 | 29 | 4604.18 |
| 8 | 4604.35 | 30 | 4604.28 |
| 9 | 4604.45 | 31 | 4604.39 |
| 10 | 4604.56 | 32 | 4604.49 |
| 11 | 4604.66 | 33 | 4604.59 |
| 23 | 4603.62 | 45 | 4603.55 |
| 24 | 4603.72 | 46 | 4603.65 |
| 25 | 4603.83 | 47 | 4603.76 |
| 26 | 4603.93 | 48 | 4603.86 |
| 27 | 4604.04 | 49 | 4603.97 |
| 28 | 4604.14 | 50 | 4604.07 |
| 29 | 4604.24 | 51 | 4604.17 |
| 30 | 4604.35 | 52 | 4604.28 |
| 31 | 4604.45 | 53 | 4604.38 |
| 32 | 4604.56 | 54 | 4604.49 |
| 33 | 4604.66 | 55 | 4604.59 |

**SOUTHBOUND ROADWAY**

| BEAM No. | SEAT ELEVATION PIER No.3 | BEAM No. | SEAT ELEVATION PIER No.4 |
|---|---|---|---|
| 12 | 4604.45 | 34 | 4604.59 |
| 13 | 4604.56 | 35 | 4604.49 |
| 14 | 4604.66 | 36 | 4604.59 |
| 15 | 4604.77 | 37 | 4604.70 |
| 16 | 4604.87 | 38 | 4604.80 |
| 17 | 4604.97 | 39 | 4604.91 |
| 18 | 4605.08 | 40 | 4605.01 |
| 19 | 4605.18 | 41 | 4605.12 |
| 20 | 4605.29 | 42 | 4605.22 |
| 21 | 4605.39 | 43 | 4605.32 |
| 22 | 4605.50 | 44 | 4605.43 |
| 34 | 4604.45 | 56 | 4604.38 |
| 35 | 4604.56 | 57 | 4604.49 |
| 36 | 4604.66 | 58 | 4604.59 |
| 37 | 4604.76 | 59 | 4604.69 |
| 38 | 4604.87 | 60 | 4604.80 |
| 39 | 4604.97 | 61 | 4604.90 |
| 40 | 4605.08 | 62 | 4605.01 |
| 41 | 4605.18 | 63 | 4605.11 |
| 42 | 4605.29 | 64 | 4605.22 |
| 43 | 4605.39 | 65 | 4605.32 |
| 44 | 4605.49 | 66 | 4605.42 |

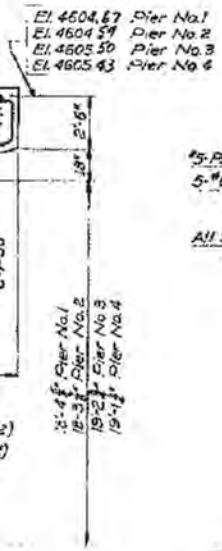


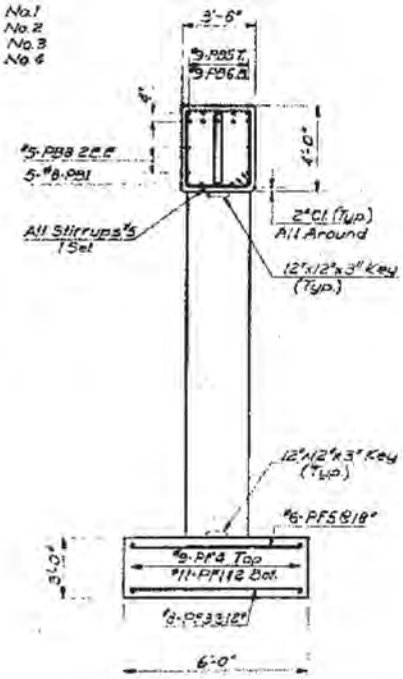


**SECTION K-K**
SCALE: 1/4" = 1'-0"

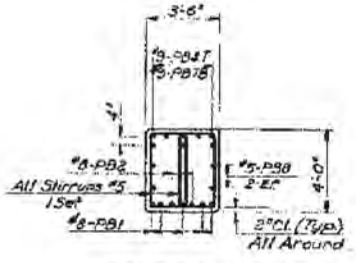


**SECTION H-H**
SCALE: 1/4" = 1'-0"

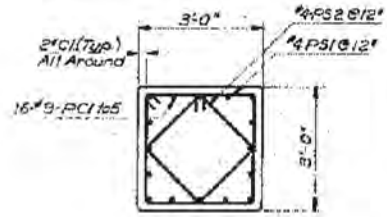


**SECTION J-J**
SCALE: 1/2" = 1'-0"

**PIERS**

SHEET 7 OF 12 SHEETS

UTAH STATE ROAD COMMISSION
SALT LAKE CITY, UTAH
BRIDGE DEPARTMENT

**LEHI 9 NORTH RELOCATION OVERPASS**
114'-4" O. TO O.
STA. 102+60.00 LEHI - PROVO
I-15-6(19)276 UTAH COUNTY
5th Contr.

DESIGNED BY Y.G.
DRAWN BY B.B.
TRACED BY
CHECKED BY Y.G.
SCALE: AS NOTED
DATE: 11, 1963
APPROVED
CHIEF BRIDGE ENGINEER
DR. NO.
DWG. NO. F-9

DESIGN AND DRAWING BY
WESTERN ENGINEERS, INC. AND
EDWARDS AND KELCEY
CONSULTING ENGINEERS

SUBMITTED BY
CHIEF ENGINEER
UTAH ENGR. LIC. NO. 2164

STATE OF UTAH
A. R. NEWKIRK
NO. 2164
REGISTERED ENGINEER

STRUCTURE 1-F2

**ATION ONLY**

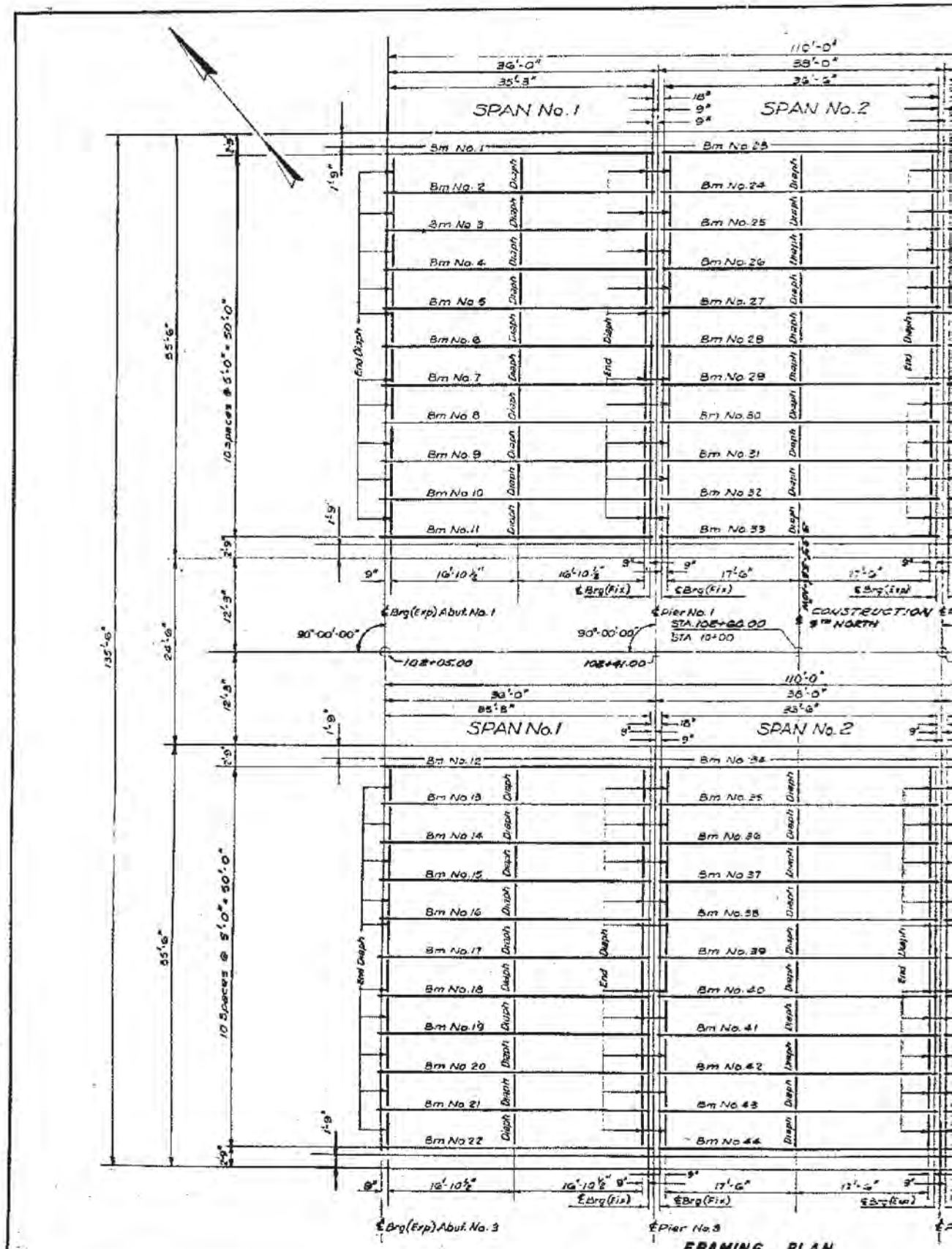


**FRAMING PLAN**

SCALE: 1/8" = 1'-0"

| FED. ROAD DIST. NO. | STATE | FED. AID PROJ. No. | | | |
|---|---|---|---|---|---|
| UT | UTAH | | | | |

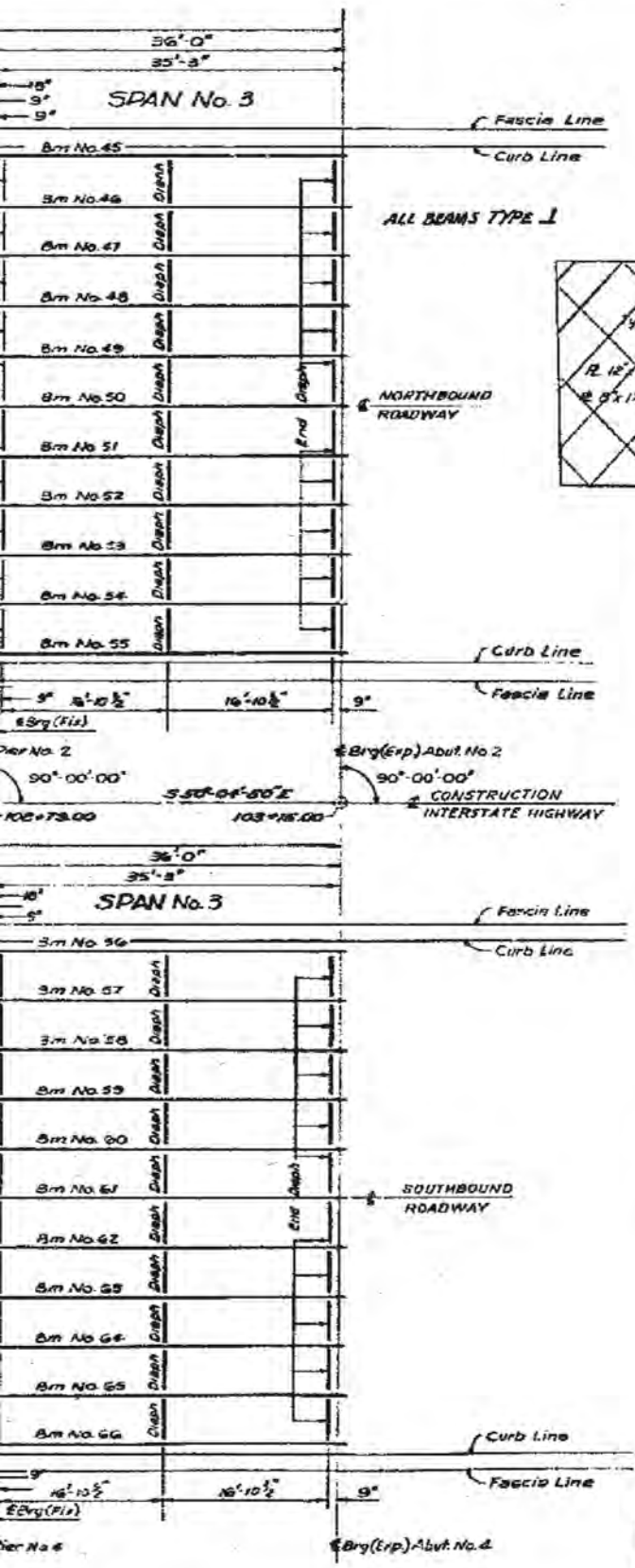


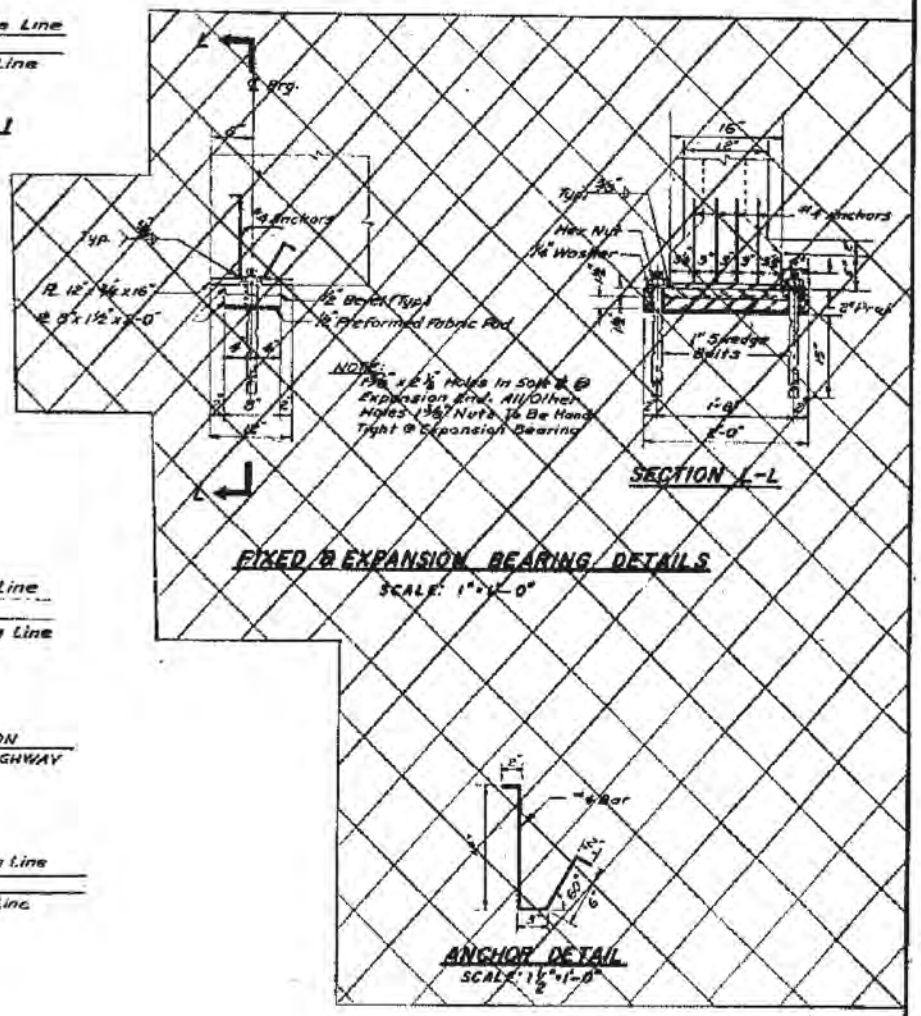


**FOR INFORMATION ONLY**

NOTE:
FOR DIAPHRAGM DETAILS SEE SHEETS 9 & 10 OF 11 SHEETS.

## FRAMING PLAN

SHEET 8 OF 13 SHEETS

UTAH STATE ROAD COMMISSION
SALT LAKE CITY, UTAH
BRIDGE DEPARTMENT

LEHI 9TH NORTH
RELOCATION OVERPASS
114'-4" O. TO O.
STA. 102+60.00 — LEHI-PROVO
S-10-6 (12) 276 — UTAH COUNTY

DESIGNED BY: VB
DRAWN BY: W.A.C.
TRACED BY:
CHECKED BY: VB
SCALE: AS NOTED
DATE: 3-1-65
DWG. No. F-9

DESIGN AND DRAWING BY
WESTERN ENGINEERS, INC. AND
EDWARDS AND KELCEY
CONSULTING ENGINEERS

SUBMITTED BY: J. R. Shewalter, CHIEF ENGINEER
UTAH ENGR. LIC. NO. 2169

REGISTERED PROFESSIONAL ENGINEER No. 2164 J. R. SHEWALTER STATE OF UTAH

STRUCTURE I-F2

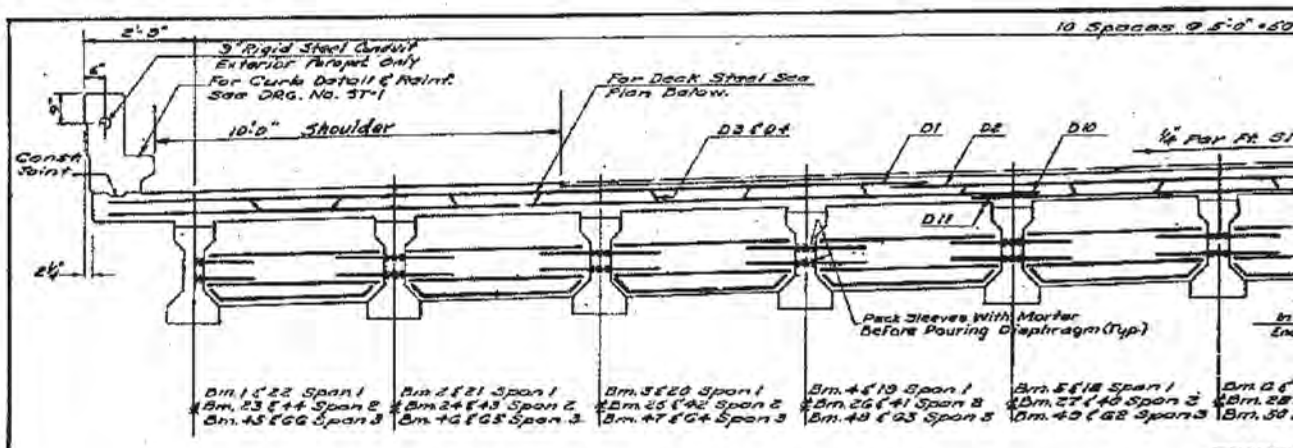


TRANSV

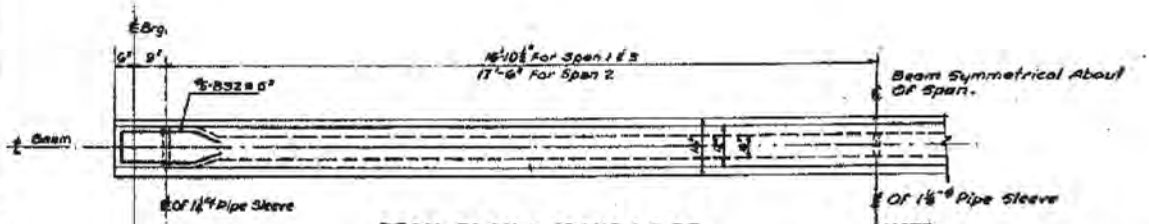


**BEAM PLAN — SPANS 1,2 & 3**

SCALE: ½" = 1'-0"

NOTE:
Use ⅝" Threaded Inserts In Exterior Beams 3" Long In Place Of Pipe Sleeves.

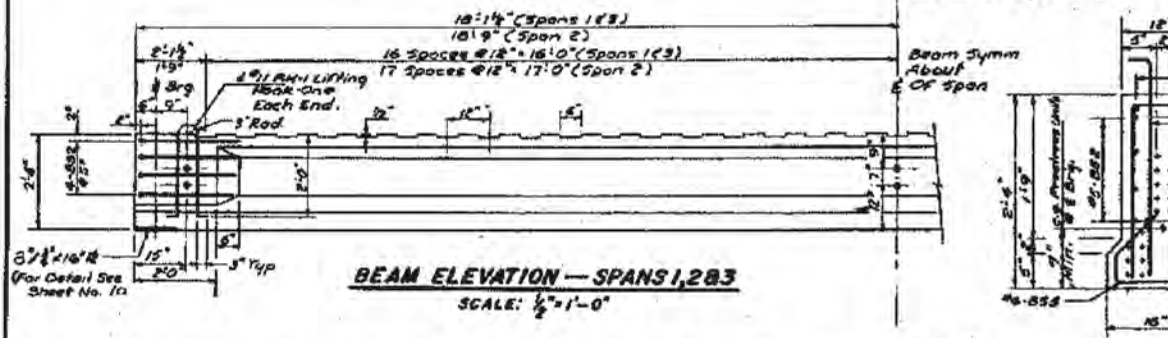


**BEAM ELEVATION — SPANS 1,2 & 3**

SCALE: ½" = 1'-0"

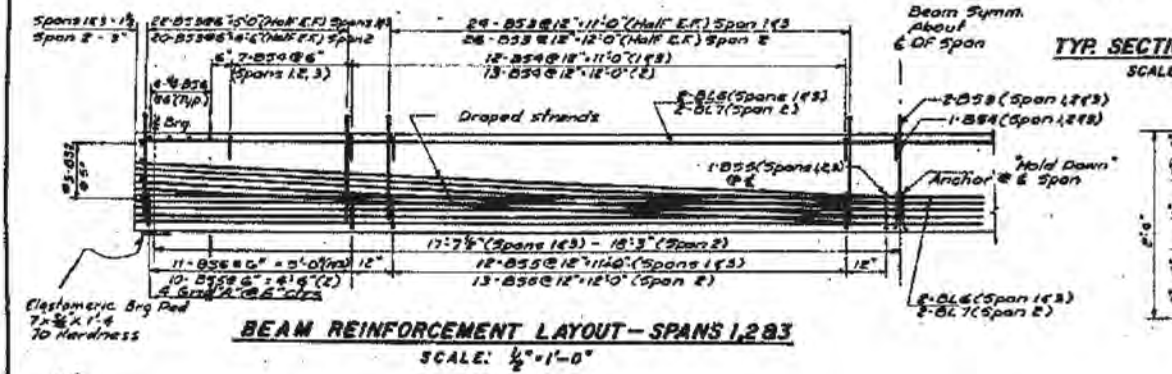


**BEAM REINFORCEMENT LAYOUT — SPANS 1,2 & 3**

SCALE: ½" = 1'-0"

Note
Reinforcement In Beam Above Is For Half The Span. Double To Get Quantities Per Beam.

End blocks may be omitted upon the approval of shop drawings by the Engineer.

TYP. SECTION AT ℄ BR

SCALE: 1" = 1'-0"

TYPICA

FOR INFORMATION ONLY

| FED. ROAD DIST. NO. | STATE | FED. AID PROJ. NO. | FISCAL YEAR | SHEET NO. | TOTAL SHEETS |
|---|---|---|---|---|---|
| UT | UTAH | | | | |

30

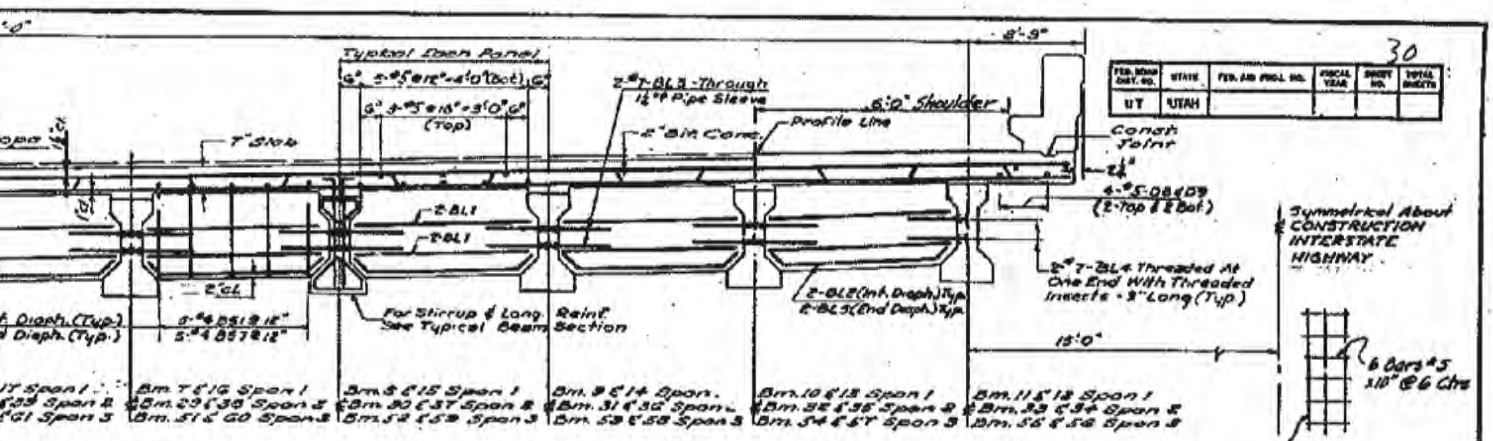


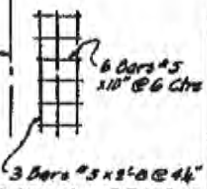


DETAIL GRID "A"

TRANSVERSE SECTION
SCALE: 1/2" = 1'-0"

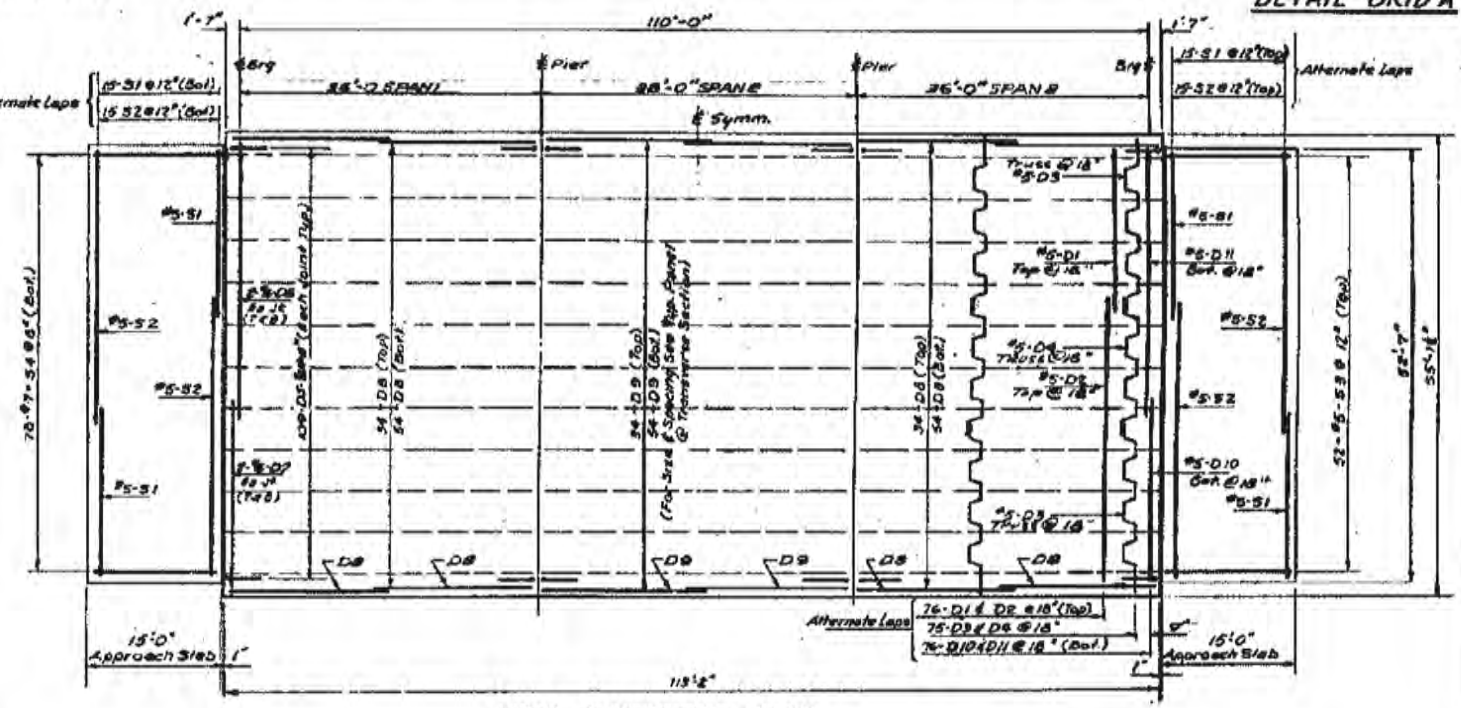


DECK REINFORCING PLAN
SCALE: 1" = 10'-0"

L BEAM SECTION
SCALE: 1" = 1'-0"

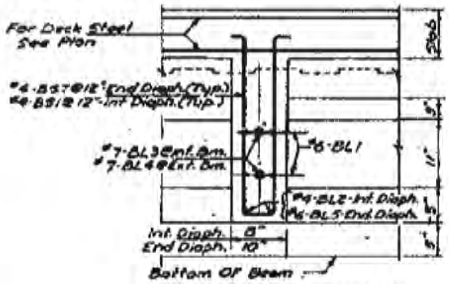


TYP. INT. DIAPHRAGM
END DIAPH. SIMILAR EXCEPT AS NOTED
SCALE: 1" = 1'-0"

Final prestress force after losses
Exterior Beams 283 kp
Interior Beams 223 kp

PRECAST PRESTRESSED BEAM DATA

Ultimate 28 Day Cylinder Strength Of Conc. —— 5000 p.s.i.
Ultimate Cylinder Strength Of Conc. At Time Of Prestressing. —— 4000 p.s.i.

Strands Shall Be Burnt Off ½" Inside At The End Of The Beam And Mortar Shall Be Applied To Cover Entire Face Of End Block.

TRANSVERSE SECTION

REGISTERED PROFESSIONAL ENGINEER
NO. 2164
J. R. REDVILLE
STATE OF UTAH

SHEET 9 OF 13 SHEETS

UTAH STATE ROAD COMMISSION
SALT LAKE CITY, UTAH
BRIDGE DEPARTMENT

LEHI 9TH NORTH RELOCATION OVERPASS
114'-4" O. TO O.
STA. 102+80.00 I-15-6 U8276
LEHI - PROVO UTAH COUNTY

DESIGNED BY K.G. MAR. 29 1966
DRAWN BY H.A.C. MAR. 1966
TRACED BY
CHECKED BY H.A.C. K.G.

DESIGN AND DRAWING BY
WESTERN ENGINEERS, INC. AND
EDWARDS AND KELCEY
CONSULTING ENGINEERS

SUBMITTED BY J. R. Redville CHIEF ENGINEER
UTAH ENGR. LIC. NO. 2164

NO. F-9

STRUCTURE 1-F2

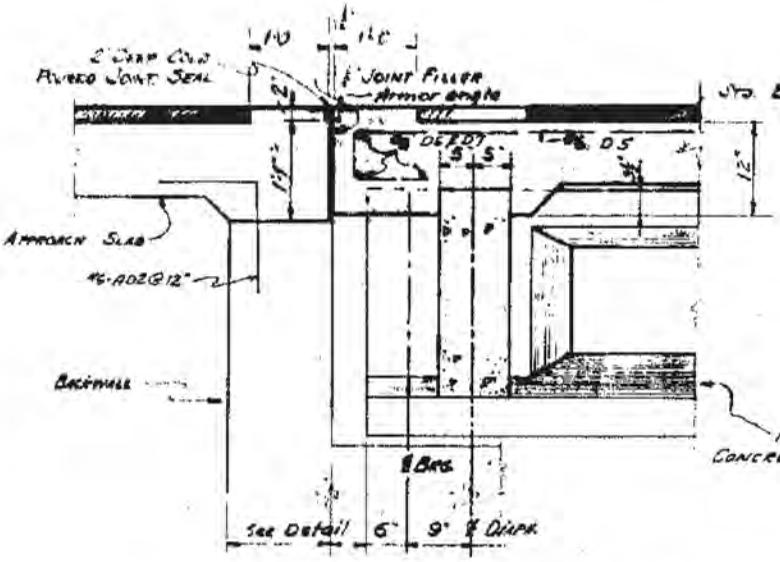


TYPICAL CROSS SECTION AT ABUTMENTS

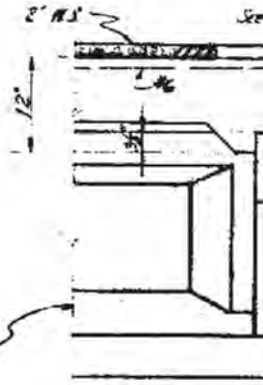

TYPICAL CRO

NOTE:
DIMENSIONS SHOWN IN TYPICAL CROSS SECTIONS AT ABUTMENTS AND BENTS ARE PERPENDICULAR TO CENTERLINE OF BEARING, NOT PARALLEL TO GIRDER CENTERLINES.
FOR PRETENSION DESIGN, END BLOCKS MAY BE ELIMINATED SUBJECT TO APPROVAL OF SHOP DETAILS BY THE ENGINEER.

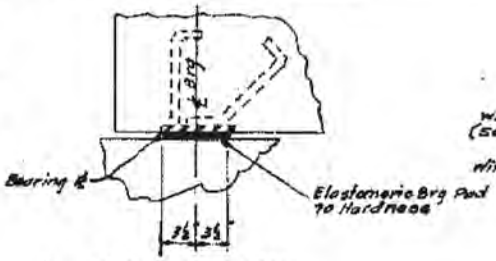


BEARING DETAIL

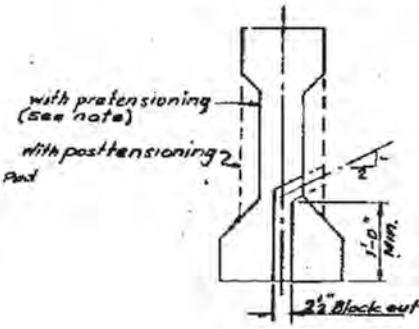


SECTION A-A

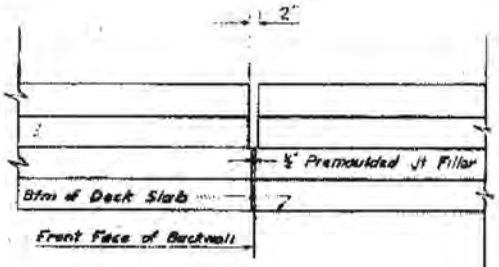


BEAM

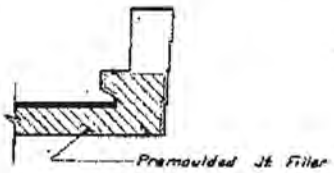


ABUTMENT JOINT DETAIL AT CURBS

TYPICAL SOL

DATE
REVISED BY
DATE
REVISED BY
DATE
REVISED BY
DATE
REVISED BY

DGN: Files 18_PW\Phase1\6721\4433.F-9.18\Foundation

RS-HWY-2695

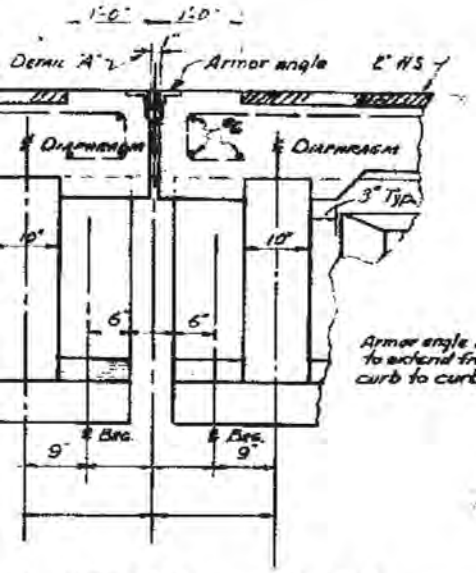


SS SECTION AT BENTS

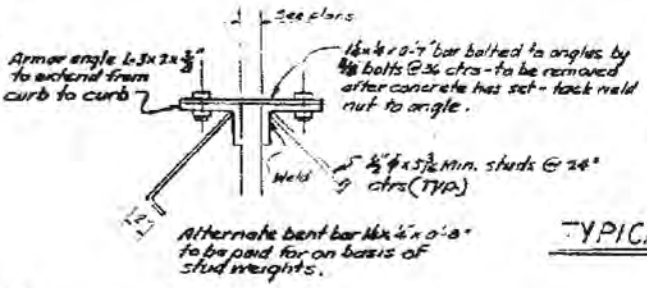


ARMOR ANGLE DETAIL

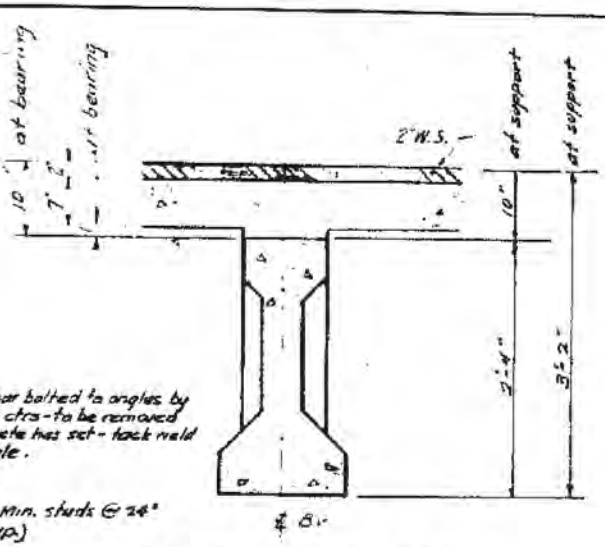


TYPICAL HAUNCH DETAIL

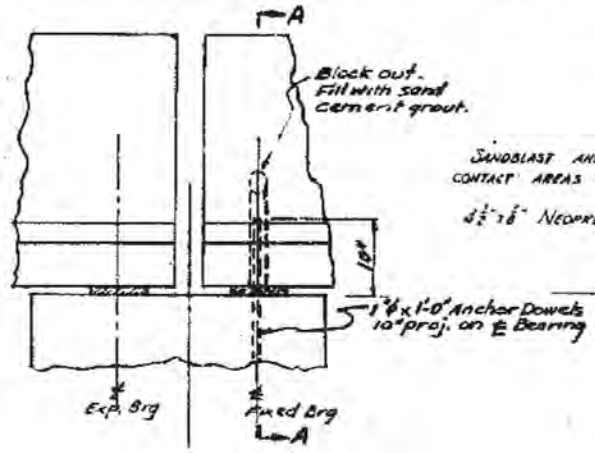


ANCHOR DETAILS

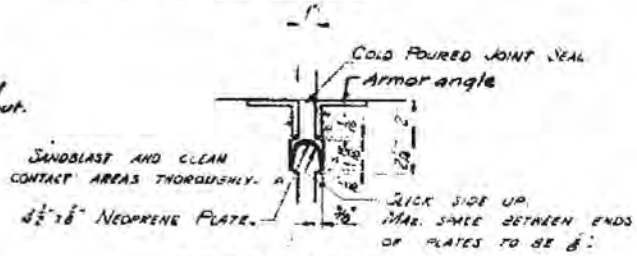


DETAIL "A" TYP.

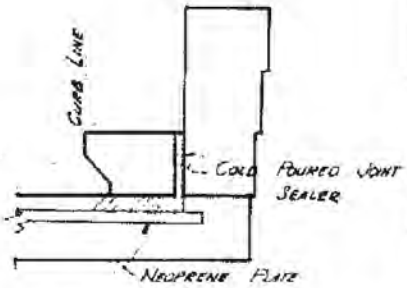


ELEVATION

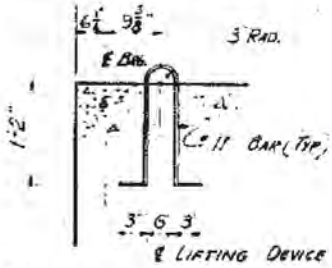


TYPICAL LIFTING DEVICE

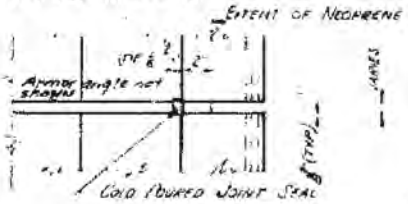


PLAN

BENT JOINT DETAIL AT CURBS

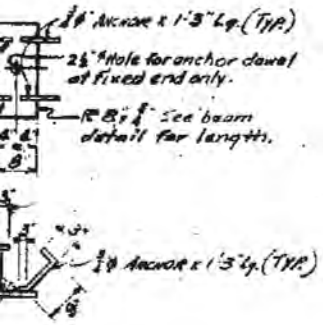


E PLATE

**FOR INFORMATION ONLY**

| | | |
|---|---|---|
| UTAH STATE DEPARTMENT OF HIGHWAYS<br>SALT LAKE CITY, UTAH<br>STRUCTURES DIVISION | | |
| LEHI - PROVO<br>LEHI 9th NORTH RELOCATION OVERPASS<br>MISC. DETAILS | | |
| DESIGNED BY | CHECKED BY RSW | I-15-6 (19) 276<br>PROJECT NUMBER |
| DRAWN BY JPK | CHECKED BY EGL | |
| QUANTITIES BY | CHECKED BY | 102 +60.00<br>STATION |
| APPROVAL<br>DISCOVERY ORDER NO. | GROUP LEADER | UTAH<br>COUNTY |
| APPROVED Jan 11, 1963 | Dale Sorensen<br>CHIEF STRUCTURAL ENGINEER | |
| BR. NO. | DWG. NO. F-9 | 10 of 13 |

5th Conte.

1 F2

# BILL OF REINFORCING

| MARK | SIZE | LGTH. | NO. REQ. | TOTAL LENGTH | TYPE | A | B | C | D | E | F | G | H | J | K | O |
|---|---|---|---|---|---|---|---|---|---|---|---|---|---|---|---|---|
| ABUTMENT REINFORCEMENT | | | | | | | | | | | | | | | | |
| AD 1 | 5 | 5'-0" | 256 | 1280'-0" | 4 | | 12" | 4'-0" | | | | | | | | |
| 2 | 6 | 4'-6" | 208 | 936'-0" | 4 | | 2'-0" | 2'-8" | | | | | | | | |
| 3 | 5 | 2'-6 | 240 | 600'-0" | 1 | | | | | | | | | | | |
| AF 1 | 5 | 5'-0" | 432 | 2160'-0" | 1 | | | | | | | | | | | |
| 2 | 5 | 16'-0" | 80 | 1280'-0" | 1 | | | | | | | | | | | |
| 3 | 5 | 31'-6" | 80 | 2520'-0" | 1 | | | | | | | | | | | |
| AS 1 | 5 | 5'-0" | 34 | 170'-0" | 1 | | | | | | | | | | | |
| 2 | | 6'-0" | 17 | 102'-0" | | | | | | | | | | | | |
| 3 | | 5'-9" | 17 | 97'-9" | | | | | | | | | | | | |
| 4 | | 5'-6" | 42 | 231'-0" | | | | | | | | | | | | |
| 5 | | 6'-6" | 21 | 136'-6" | | | | | | | | | | | | |
| 6 | | 6'-3" | 21 | 131'-3" | | | | | | | | | | | | |
| 7 | | 2'-6" | 34 | 85'-0" | | | | | | | | | | | | |
| 8 | | 3'-3" | 34 | 110'-6" | | | | | | | | | | | | |
| 9 | | 3'-0" | 42 | 126'-0" | | | | | | | | | | | | |
| 10 | | 4'-0" | 42 | 168'-0" | 1 | | | | | | | | | | | |
| 11 | | 4'-9" | 220 | 1045'-0" | 4 | | 2'-0" | 2'-9" | | | | | | | | |
| 12 | | 3'-6" | 164 | 574'-0" | 1 | | | | | | | | | | | |
| 13 | | 22'-0" | 18 | 396'-0" | 1 | | | | | | | | | | | |
| 14 | | 28'-0" | 18 | 504'-0" | 1 | | | | | | | | | | | |
| 15 | | 29'-6" | 22 | 649'-0" | 1 | | | | | | | | | | | |
| 16 | | 29'-6" | 22 | 649'-0" | 1 | | | | | | | | | | | |
| 17 | | 26'-0" | 18 | 468'-0" | 4 | | 18" | 24'-6" | | | | | | | | |
| 18 | 5 | 31'-0" | 18 | 558'-0" | 4 | | 18" | 29'-8" | | | | | | | | |
| 19 | 6 | 29'-6" | 18 | 531'-0" | 1 | | | | | | | | | | | |
| 20 | 6 | 24'-6" | 18 | 441'-0" | 1 | | | | | | | | | | | |
| WINGWALL REINFORCEMENT | | | | | | | | | | | | | | | | |
| AW 1 | 5 | 6'-8" | 46 | 293'-4" | 1 | | | | | | | | | | | |
| 2 | | 7'-6" | 88 | 660'-0" | | | | | | | | | | | | |
| 3 | | 8'-7" | 44 | 377'-8" | | | | | | | | | | | | |
| 4 | | 12'-6" | 16 | 200'-0" | | | | | | | | | | | | |
| 5 | | 14'-4" | 28 | 402'-0" | | | | | | | | | | | | |
| 6 | | 11'-0" | 28 | 308'-0" | 1 | | | | | | | | | | | |
| 7 | 5 | 18'-0" | 16 | 288'-0" | 4 | | 18" | 12'-6" | | | | | | | | |
| APPROACH SLAB REINFORCEMENT | | | | | | | | | | | | | | | | |
| S 1 | 5 | 23'-0" | 120 | 2760'-0" | 1 | | | | | | | | | | | |
| 2 | 5 | 30'-0" | 120 | 3600'-0" | 1 | | | | | | | | | | | |
| 3 | 5 | 19'-6" | 208 | 4056'-0" | 1 | | | | | | | | | | | |
| 4 | 7 | 16'-6" | 318 | 5247'-0" | 1 | | | | | | | | | | | |
| DECK SLAB REINFORCEMENT | | | | | | | | | | | | | | | | |
| D 1 | 5 | 21'-0" | 152 | 3192'-0" | 1 | | | | | | | | | | | |
| 2 | 5 | 35'-0" | 158 | 5530'-0" | 1 | | | | | | | | | | | |
| 3 | 5 | 22'-8" | 300 | 6810'-0" | 28 | | 3'-0" | 7" | 2'-8" | 1'-11" | 9" | 6'-0" | | | | |
| 4 | 5 | 18'-3" | 150 | 2737'-6" | 27 | | | 7" | 2'-3" | 1'-11" | 9" | 6'-0" | | | | |
| 5 | 6 | 4'-0" | 1908 | 7632'-0" | 23 | 6" | 6" | 2'-8" | | | | | | | | |
| 6 | 6 | 32'-9" | 24 | 786'-0" | 1 | | | | | | | | | | | |
| 7 | 6 | 23'-0" | 24 | 552'-0" | | | | | | | | | | | | |
| 8 | 5 | 19'-6" | 704 | 13728'-0" | | | | | | | | | | | | |
| 9 | 5 | 19'-9" | 248 | 4902'-0" | | | | | | | | | | | | |
| 10 | 5 | 23'-0" | 158 | 3634'-0" | | | | | | | | | | | | |
| 11 | 5 | 32'-9" | 158 | 5178'-0" | 1 | | | | | | | | | | | |
| CURB & PARAPET REINFORCEMENT | | | | | | | | | | | | | | | | |
| DC 1 | 5 | 8'-11" | 360 | 3215'-0" | 24 | 8" | 2'-10½" | 2'-7" | 18" | 12" | 1" | 12" | | | | |
| 2 | 5 | 3'-1" | 448 | 1381'-9" | 20 | 1'-0½" | 1'-8½" | | | | | | | | | |
| 3 | 5 | 6'-0" | 88 | 528'-0" | 28 | | 2'-10 | 8" | 2'-6" | | 1" | 12" | | | | |
| 4 | 4 | 12'-0" | 72 | 864'-0" | 1 | | | | | | | | | | | |
| 5 | 4 | 19'-6" | 112 | 2184'-0" | 1 | | | | | | | | | | | |
| 6 | 4 | 19'-9" | 56 | 1106'-0" | 1 | | | | | | | | | | | |

| MARK | SIZE | LGTH. | NO. REQ. | TOTAL LENGTH | TYPE | A | B | C | D | E |
|---|---|---|---|---|---|---|---|---|---|---|
| PIER REINFORCEMENT | | | | | | | | | | |
| PB 1 | 8 | 30'-9" | 40 | 890'-0" | 1 | | | | | |
| 2 | 8 | 10'-3" | 16 | 164'-0" | 1 | | | | | |
| 3 | 8 | 12'-9" | 40 | 510'-0" | 22 | 18" | 3'-0" | 6'-0" | 2'-0" | |
| 4 | 9 | 20'-9" | 20 | 415'-0" | 1 | | | | | |
| 5 | 9 | 18'-3" | 40 | 730'-0" | 1 | | | | | |
| 6 | 9 | 14'-0" | 40 | 560'-0" | 1 | | | | | |
| 7 | 9 | 12'-0" | 18 | 108'-0" | 1 | | | | | |
| 8 | 5 | 27'-3" | 32 | 872'-0" | 1 | | | | | |
| PC 1 | 9 | 21'-0" | 32 | 672'-0" | 1 | | | | | |
| 2 | 9 | 21'-6" | 32 | 688'-0" | 1 | | | | | |
| 3 | 9 | 22'-0" | 64 | 1408'-0" | 1 | | | | | |
| 4 | 9 | 22'-5 | 32 | 717'-4" | 1 | | | | | |
| 5 | 9 | 22'-10" | 32 | 730'-8" | 1 | | | | | |
| PD-1 | 9 | 7'-3" | 192 | 1392'-0" | 4 | | 12" | 6'-3" | | |
| PF 1 | 11 | 32'-0" | 32 | 1048'-0" | 1 | | | | | |
| 2 | 11 | 14'-0" | 32 | 448'-0" | 1 | | | | | |
| 3 | 8 | 5'-6" | 180 | 990'-0" | 1 | | | | | |
| 4 | 9 | 23'-9" | 56 | 1330'-0" | 1 | | | | | |
| 5 | 6 | 5'-6" | 120 | 660'-0" | 1 | | | | | |
| PS 1 | 4 | 11'-6" | 228 | 2622'-0" | 18 | 5" | 2'-8" | 2'-8" | 2'-8" | 2'-8" |
| 2 | 4 | 8'-6" | 228 | 1938'-0" | | | 1'-11" | 1'-11" | 1'-11" | 1'-11" |
| 3 | 5 | 11'-6" | 240 | 2760'-0" | | | 1'-8" | 3'-8" | 1'-8" | 3'-8" |
| 4 | | 11'-2" | 16 | 178'-8" | | | | 3'-6" | | 3'-6" |
| 5 | | 10'-8" | 16 | 170'-8" | | | | 3'-3" | | 3'-3" |
| 6 | | 10'-6" | 16 | 168'-8" | | | | 3'-0" | | 3'-0" |
| 7 | | 9'-8" | 16 | 154'-8" | | | | 2'-9" | | 2'-9" |
| 8 | 5 | 9'-8" | 16 | 148'-8" | 18 | 5" | 1'-8" | 2'-8" | 1'-8" | 2'-6" |
| PRESTRESSED CONCRETE BEAM REINFORCEMENT | | | | | | | | | | |
| BH 1 * | 11 | 5'-3½" | 132 | 698'-6" | 29 | 9" | 2'-0" | 2'-0" | 9" | 9" |
| BSE + | 6 | 5'-6" | 528 | 2904'-0" | 21 | 1'-10" | 8" | 1'-10" | 7" | 7" |
| 3 + | 4 | 2'-10" | 6808 | 19,378'-0" | 4 | | 8" | 2'-7" | | |
| 4 * | 4 | 2'-2" | 2618 | 5678'-4" | 31 | 2½" | 9" | 2½" | 8" | 8" |
| 5 * | 4 | 3'-1" | 3102 | 9549'-6" | 31 | 3½" | 13" | 3½" | 8½" | 8½" |
| 6 * | 4 | 4'-9" | 528 | 2508'-0" | 21 | | 2'-0" | 9" | 2'-0" | |
| BL 6* | 4 | 19'-0" | 352 | 6688'-0" | 1 | | | | | |
| 7 * | 4 | 18'-6" | 176 | 3252'-0" | 1 | | | | | |
| DIAPHRAGM REINFORCEMENT | | | | | | | | | | |
| BL 1 | 6 | 4'-3" | 720 | 3060'-0" | 1 | | | | | |
| 2 | 4 | 4'-9" | 120 | 570'-0" | 20 | 7½" | 3'-6" | 7½" | | |
| 3 | 7 | 3'-0" | 324 | 972'-0" | 1 | | | | | |
| 4 | 7 | 1'-6" | 72 | 108'-0" | 1 | | | | | |
| 5 | 6 | 4'-9" | 240 | 1140'-0" | 20 | 7½" | 3'-6" | 7½" | | |
| BS 1 | 4 | 5'-2" | 300 | 1550'-0" | 13 | | 9" | 2'-2" | 4" | 2'-2" |
| 7 | 4 | 5'-4" | 600 | 3200'-0" | 13 | | 9" | 2'-2" | 6" | 2'-2" |

* REINFORCEMENT NOT INCLUDED IN ESTIMATE TO BE FURNISHED BY BEAM FABRICATOR

# STEEL

| F | G | H | J | K | O |
|---|---|---|---|---|---|
| | | | | | |

| MARK | SIZE | LGTH. | NO. REQ. | TOTAL LENGTH | TYPE | A | B | C | D | E | F | G | H | J | K | O |
|---|---|---|---|---|---|---|---|---|---|---|---|---|---|---|---|---|
| | | | | | | | | | | | | | | | | |

32

| FED. ROAD DIST. NO. | STATE | FED. AID PROJ. NO. | | | |
|---|---|---|---|---|---|
| UT | UTAH | | | | |

## BAR TYPES

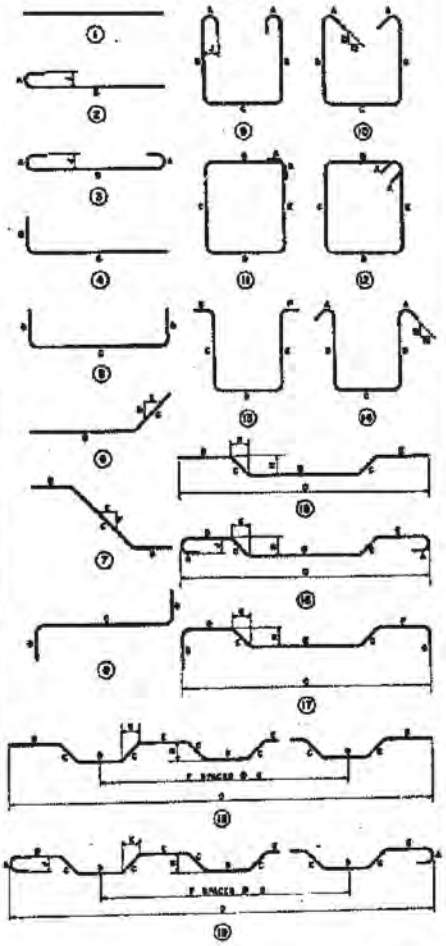


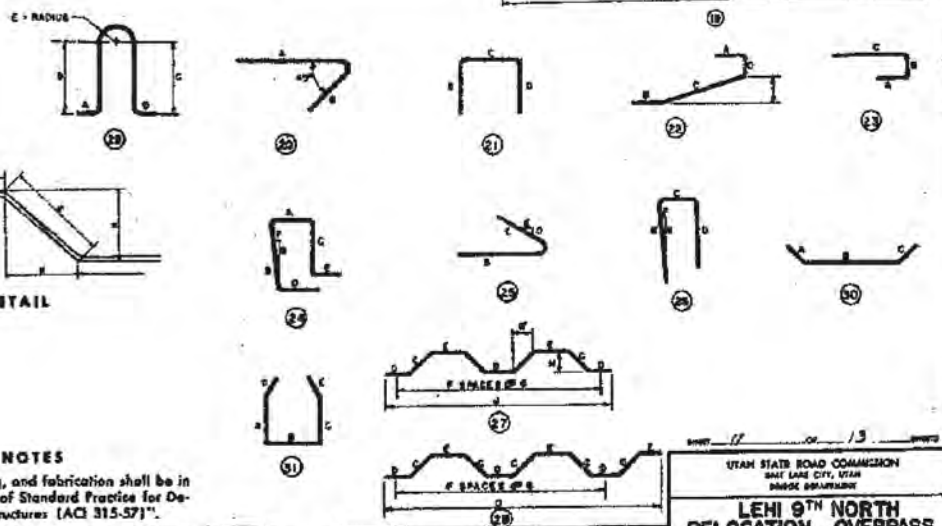


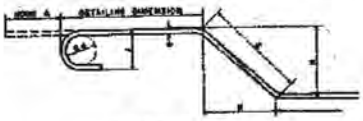


HOOK DETAIL

### GENERAL NOTES

1. All placing drawings, detailing, and fabrication shall be in accordance with the "Manual of Standard Practice for Detailing Reinforced Concrete Structures (ACI 315-57)".
2. All dimensions shown for bar bending details are out-to-out of bars.

REGISTERED PROFESSIONAL ENGINEER NO. 2164 J. R. NEWVILLE STATE OF UTAH

DESIGN AND DRAWING BY
WESTERN ENGINEERS, INC. AND
EDWARDS AND KELCEY
CONSULTING ENGINEERS

SUBMITTED BY _____ CHIEF ENGINEER
UTAH ENGR. LIC. NO. 2164

SHEET 17 OF 13 SHEETS

UTAH STATE ROAD COMMISSION
SALT LAKE CITY, UTAH
BRIDGE DEPARTMENT

LEHI 9TH NORTH RELOCATION OVERPASS
114'-4" O. TO O.

STA. 102 +60.00 I-15-6(15)276
LEHI-PROVO UTAH COUNTY

DESIGNED BY A.G.R. SCALE AS NOTED
DRAWN BY T.K.M. REVISED Nov. 11, 1963
TRACED BY _____ APPROVED _____ CHIEF BRIDGE ENGINEER
CHECKED BY A.R.

NO. _____ DWG. NO. F-9

STRUCTURE 1-F2

5th Const.

**FOR INFORMATION ONLY**

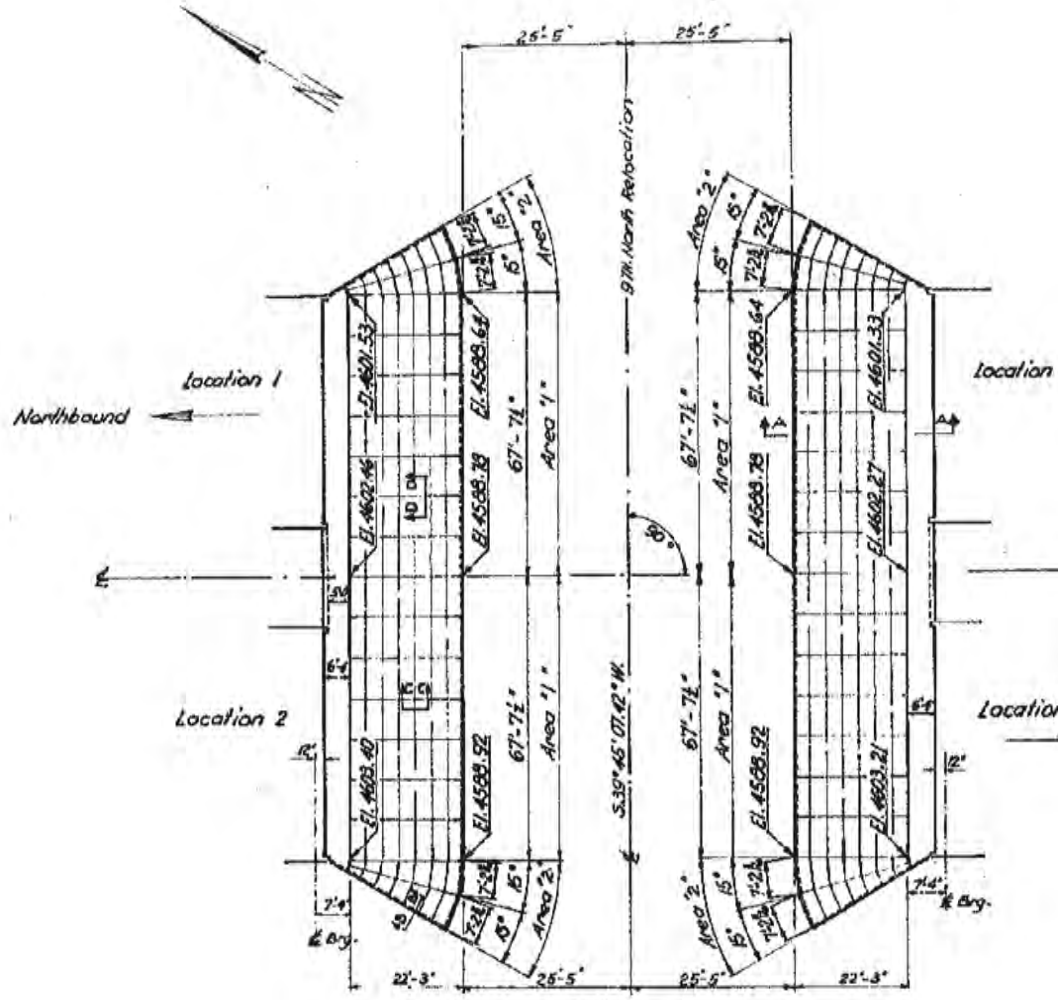


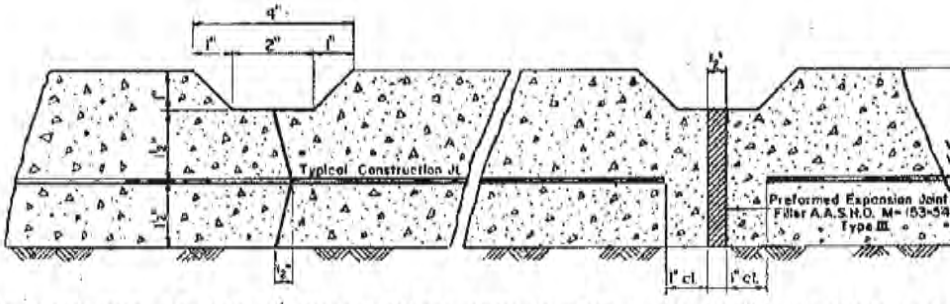


Locate Construction Joints as needed in placing concrete slab. Locate vertical Expansion Joints at 40'-0" max. spacing in slab.

SECTION C-C

SECTION D-D

## CONC. SLOPE PROTECTION

| Location No. | Avg. Slope Length | Area "1" ② | Area "2" or "3" ③ | Quantity Sq. Yd. ① |
|---|---|---|---|---|
| 1 | 26.27' | 245 | 25 | 270 |
| 2 | 26.68' | 248 | 26 | 274 |
| 3 | 26.58' | 247 | 26 | 273 |
| 4 | 26.17' | 244 | 24 | 268 |
| | | | | 1,085 |

NOTES

① Quantity in Sq. Yd. is estimated exposed Surface
② Area "1" = (Berm Width + Slope Length) x Toe Length
③ Area "2" or "3" = (Slope Length + 5'-0") x Toe Length x ½

**FOR INFORMATION ONLY**

4

Construction

3

Southbound

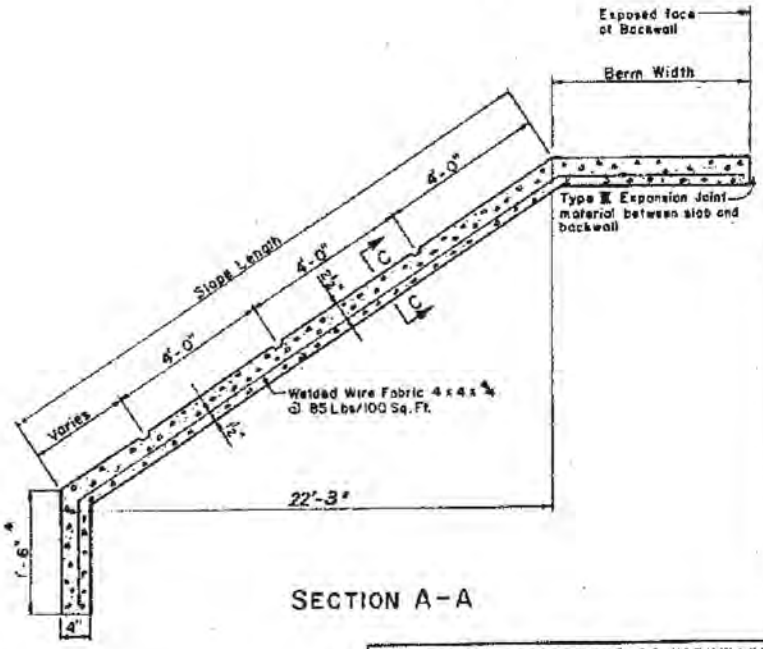


SECTION A-A

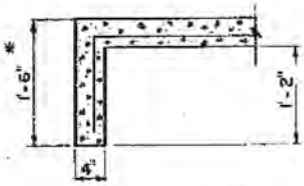


SECTION B-B
(Cut-off wall Detail)

* NOTE
Cut-off Wall is not included in exposed finished surface

Welded Wire Fabric ¾
4 x 4 x ¾
@ 85 Lbs/100 Ft²

UTAH STATE DEPARTMENT OF HIGHWAYS
SALT LAKE CITY, UTAH
STRUCTURES DIVISION

LEHI - PROVO
LEHI 9TH. NORTH-RELOCATION OVERPASS
REINF. CONC. SLOPE PROTECTION

| | | |
|---|---|---|
| DESIGNED BY | CHECKED BY | 5 Ch. Contr. |
| DRAWN BY A.C.P. | CHECKED BY H.M.A.M.A.D. | PROJECT NUMBER |
| QUANTITIES BY A.C.P. | CHECKED BY H.M.A.M.A.D. | 102 + 60.00 |
| APPROVED RECOMMENDED BY | GROUP LEADER | STATION |
| APPROVED | | UTAH |
| | | COUNTY |

| NO | BY | DATE | REMARKS |
|---|---|---|---|
| | | | REVISIONS |

DWG NO F-9 | 12 OF 13

F-1

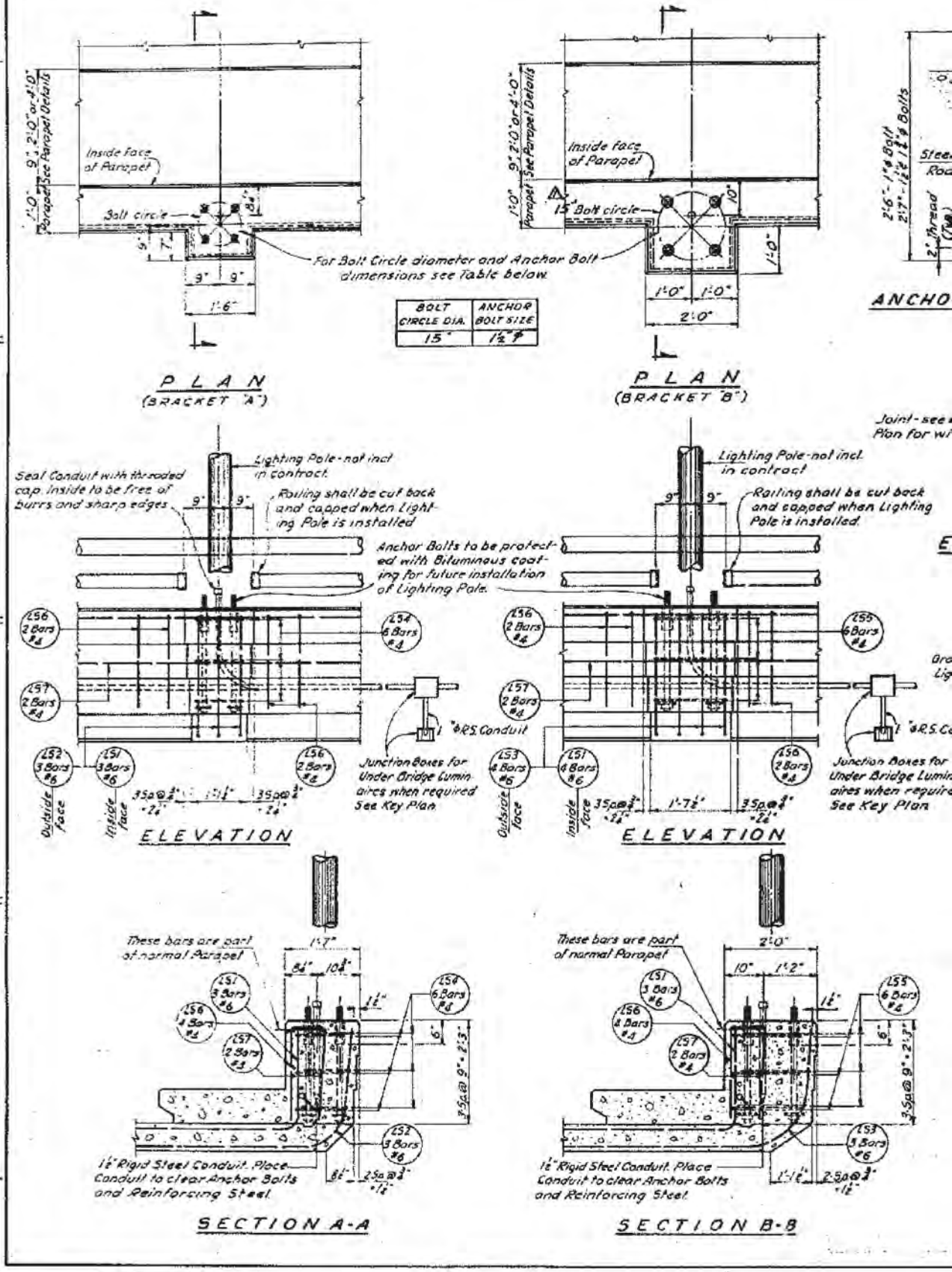


| BOLT CIRCLE DIA. | ANCHOR BOLT SIZE |
|---|---|
| 15" | 1½"ϕ |

FOR INFORMATION ONLY

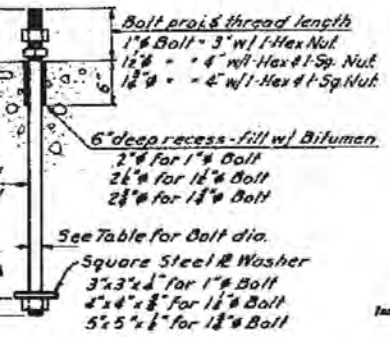


R BOLT DETAIL

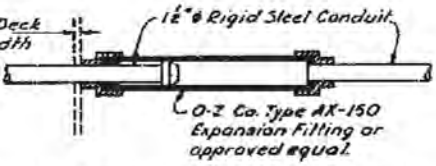


XPANSION FITTING DETAIL

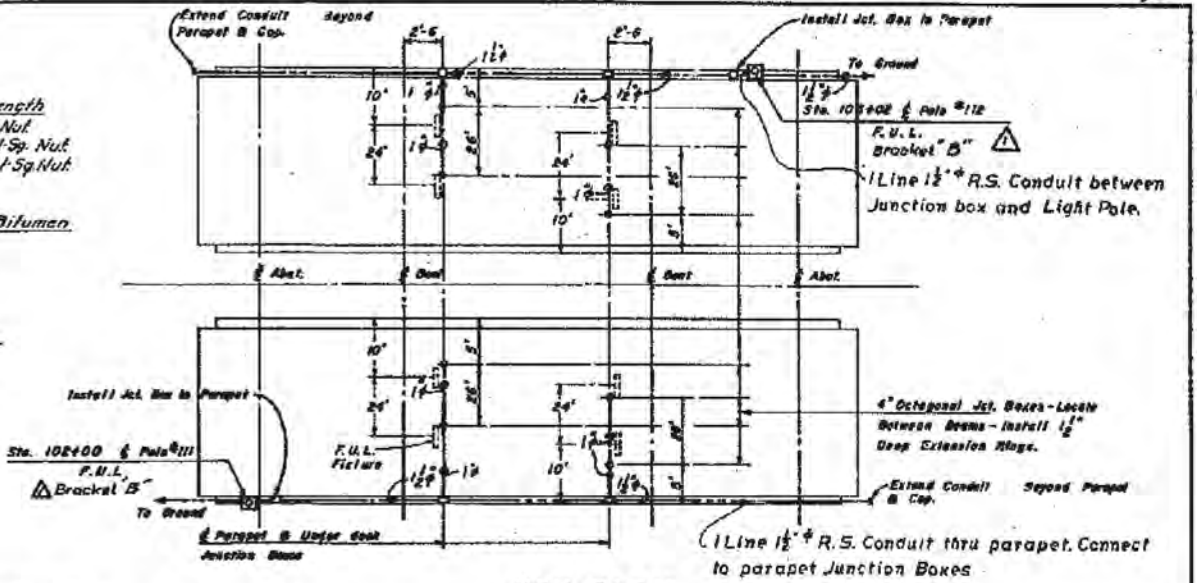


KEY PLAN
NOT TO SCALE

**Note**

Light Pole stationing, if shown, is approximate. Pole Mounting Bracket shall be located midway between railing posts nearest the station indicated. F.U.L. Fixtures 24'-0 C. to C. on Face of Concrete Bent Bent Beam With Ranger Studs or equal For Attachment. Install Flexible Conduit From Deck Junction Box To Lighting Fixture. (F.U.L. - Fluorescent Understructure Lighting) Installation of F.U.L. Fixtures By Others.

STEEL SCHEDULE - POLE SUPPORT

| MARK | SIZE | LENGTH | AMT | SKETCH |
|---|---|---|---|---|
| LS1 | 6 | 5'-2" | 6 | 2'-10" 1'-10" 4"R |
| LS2 | 6 | 6'-1" | 6 | 3'-4" 11"R 2½" |
| LS3 | 6 | 6'-4" | - | 3'-4" 1'-5"R 2½" |
| LS4 | 4 | 3'-3" | 12 | LS4 - 1'-1" LS5 - 1'-6" LS4 1'-1" LS5 1'-7" |
| LS5 | 4 | 4'-8" | - | |
| LS6 | 4 | 4'-11" | 8 | 2'-1" 12" 4" |
| LS7 | 4 | 7'-0" | 4 | |

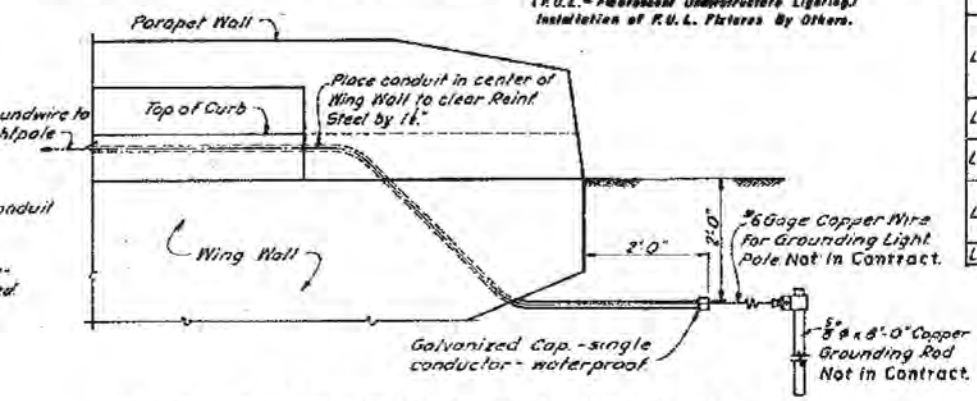


CONDUIT TERMINATION AT WING WALLS

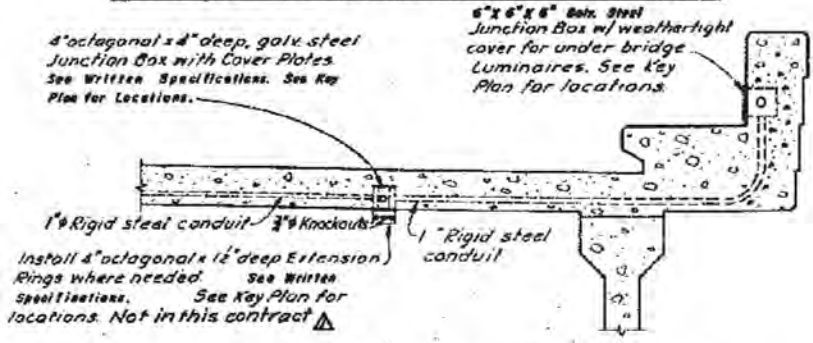


DETAILS FOR FUTURE SUSPENDED UNDERPASS LUMINAIRES

| NO. | BY | DATE | REMARKS |
|---|---|---|---|
| 1 | | | Add 7-15-63: Bracket "A" to "B" 15" B.C. added |

REVISIONS

GENERAL NOTES

1- Rigid Steel Conduit, threaded and galvanized, shall conform to Federal Specifications WW-C-581c.

2- Conduit Expansion Fittings shall be installed where ever conduit crosses structure expansion joints.

3- Conduit shall terminate at junction boxes with double lock nuts and insulated grounding type bushings. Bushings shall be O-Z Co. Type BL or approved equal. All conduit shall be bonded in boxes with bare #6 AWG Copper Wire.

4- All work shall conform to the latest Edition of the National Electrical Code.

5- See Special Provisions for Electrical Work - Bridges.

UTAH STATE DEPARTMENT OF HIGHWAYS
SALT LAKE CITY, UTAH
STRUCTURES DIVISION
LEHI TO PROVO
LEHI 9th. NO. RELOCATION OVERPASS
ELECTRICAL WORK BRIDGES

| | | |
|---|---|---|
| DESIGNED BY | DESIGNED BY | I-15-6(15)276 5th Contr. |
| DRAWN BY J.H.O. | CHECKED BY | PROJECT NUMBER |
| QUANTITIES BY | APPROVED BY | 102+60.00 STATION |
| APPROVAL RECOMMENDED BY | | Utah COUNTY |
| APPROVED | | |
| BR. NO. 1-12 | DWG. NO. F-9 | 13a OF 13 |

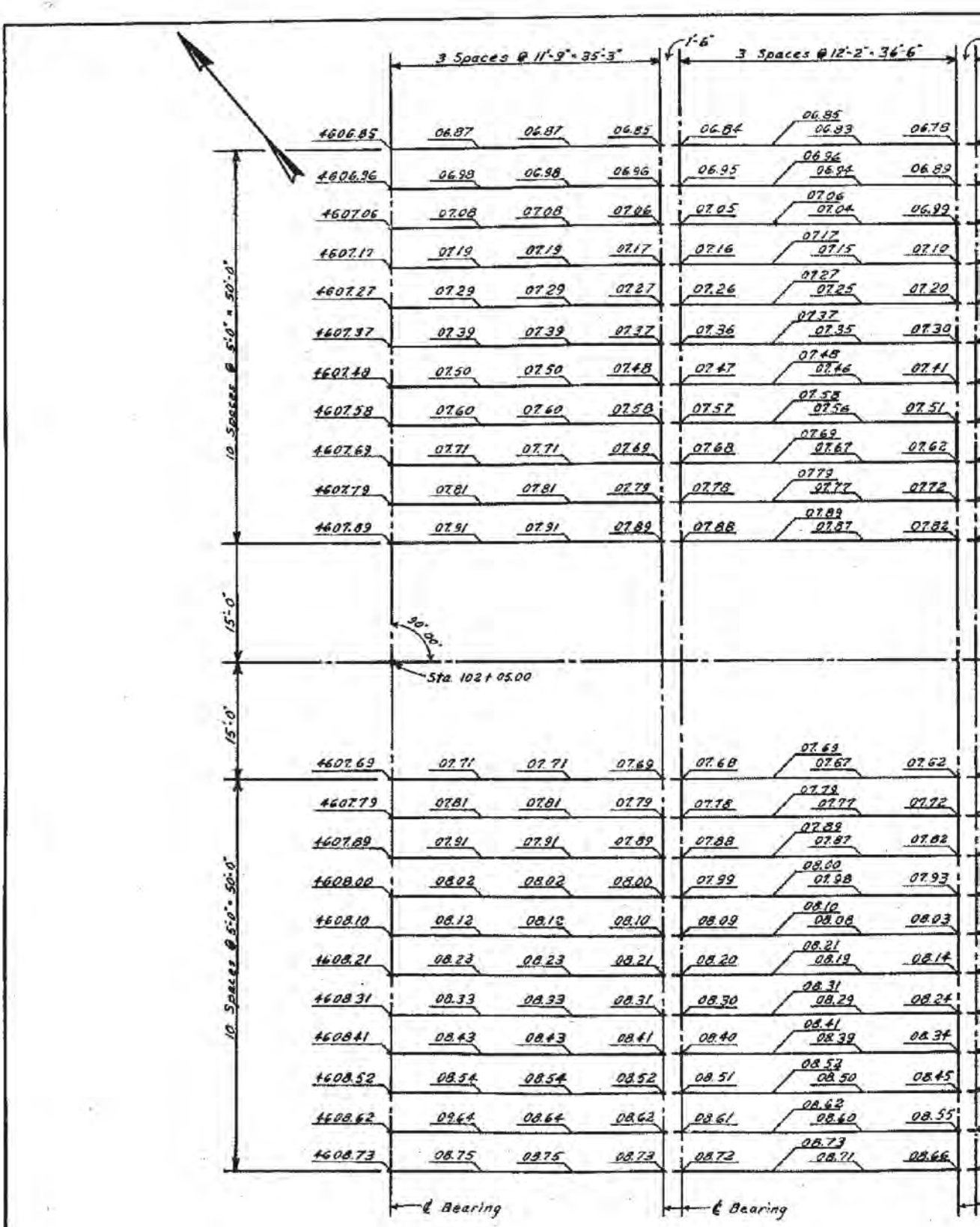


**FOR INFORMATION ONLY**

02-MAY-2006 DGN Files IP PWPdms\1672\4433.F-9.13for\infoOnly

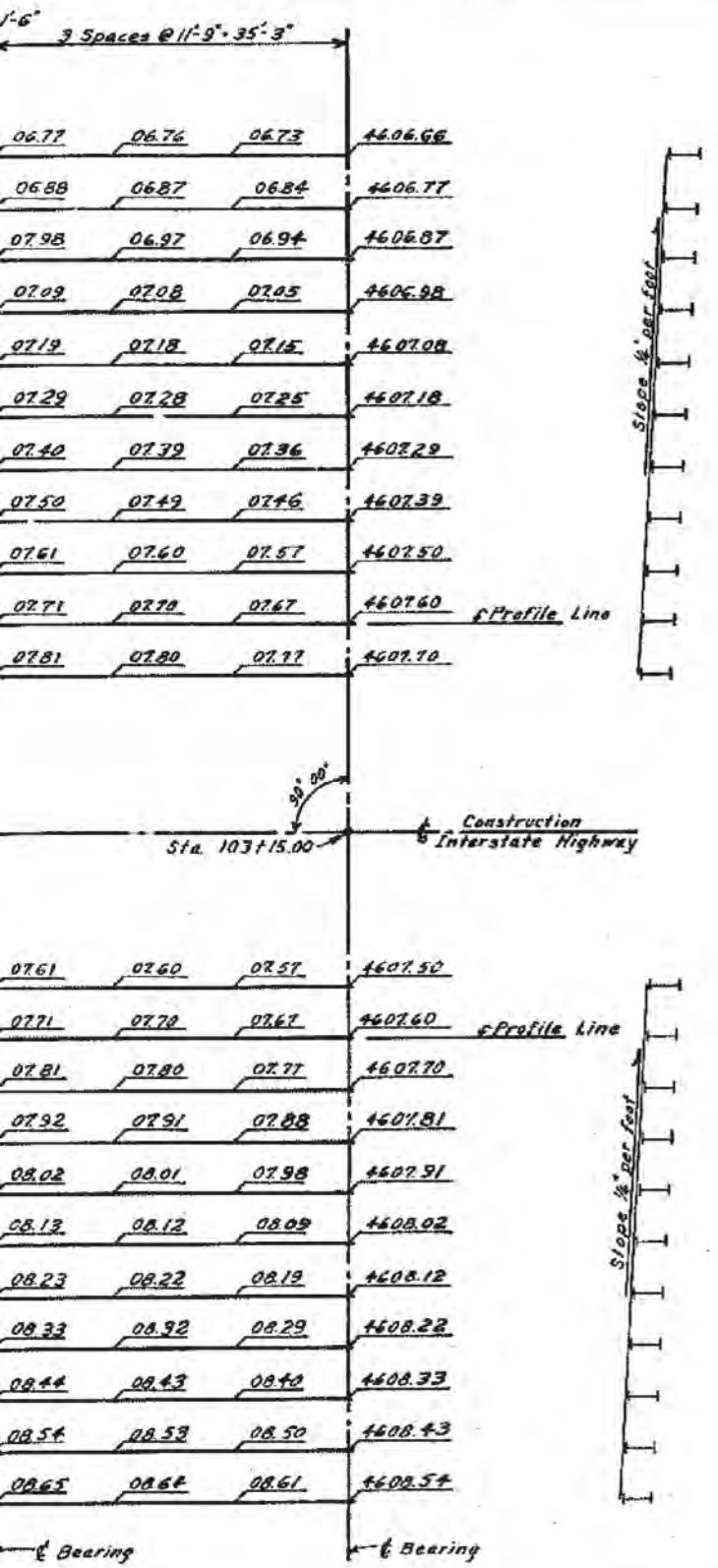


Note:
Elevations are finish grade plus 1.25 x deflection due to slab.

Maximum deflection x 1.25 used for all beams = 0.03 feet

| | | | |
|---|---|---|---|
| UTAH STATE DEPARTMENT OF HIGHWAYS<br>SALT LAKE CITY, UTAH<br>STRUCTURES DIVISION | | | |
| LEHI - PROVO<br>LEHI 9th N. RELOCATION O'PASS<br>SCREED ELEVATIONS | | | |
| DESIGNED BY | CHECKED BY K.S.W. | 3-15-6(19)276 | 5th Cont. |
| DRAWN BY JEW | CHECKED BY H.H.McO. | PROJECT NUMBER | |
| QUANTITIES BY JEW | CHECKED BY H.H.McO. | 102+60.00 | |
| APPROVAL RECOMMENDED BY O.E. Thompson, Jr. GROUP LEADER | | STATION | |
| APPROVED January 11, 1963 DATE; D.L. Sargent CHIEF STRUCTURAL ENGINEER | | UTAH | |
| | | COUNTY | |
| NO. BY DATE REMARKS<br>REVISIONS | | DRG. NO. F-9 | 13 OF 13 |

1-F2

1

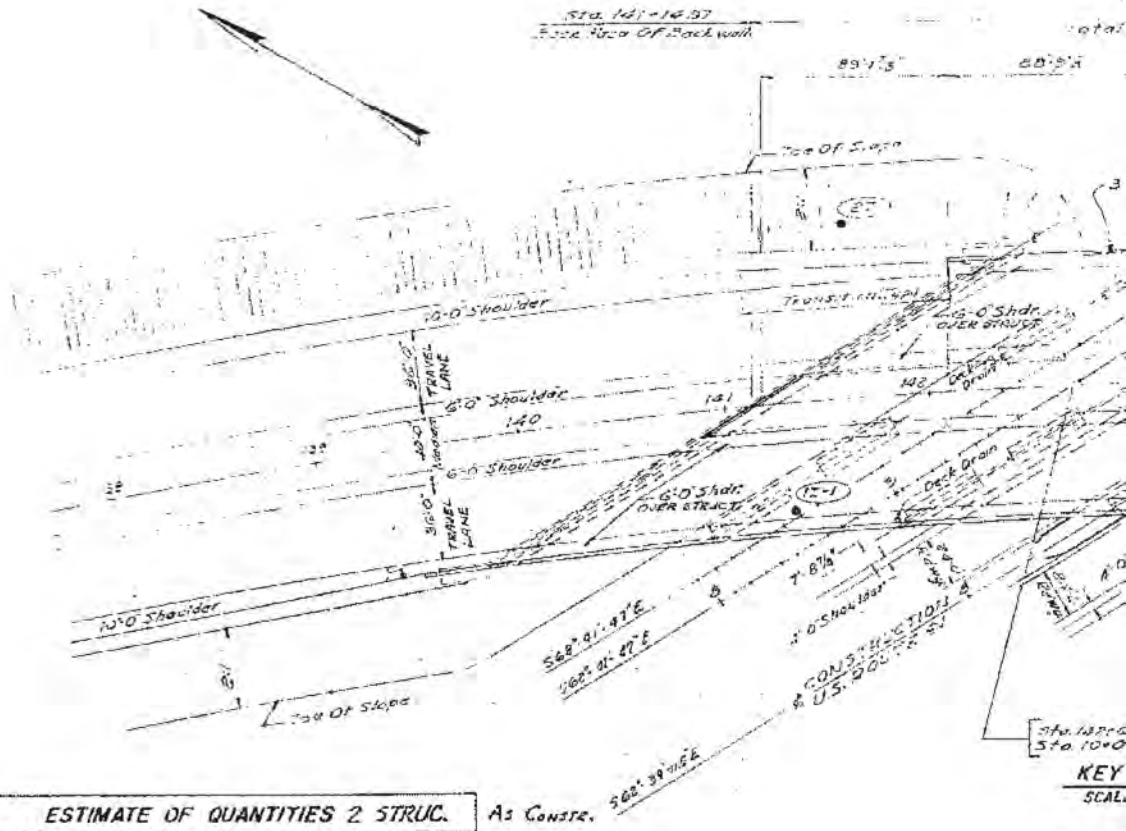


| ESTIMATE OF QUANTITIES 2 STRUC. | | | As Constr. |
|---|---|---|---|
| | ITEM | QUANTITIES | |
| | EXCAV. FOR STRUCTURES (UNCLASSIFIED) | 2,200 Cu. Yd | 1729.11 |
| | CLASS A CONCRETE (AE) | 3400 Cu Yd | 3395.6 |
| | REINFORCING STEEL | 718,228 Lb | 722,487 |
| | STRUCTURAL STEEL | 1283000 Lb | 1,341,263 |
| | FURNISHING PILE DRIVING EQUIP. | 1 Lump | 2 |
| | METAL RAILING - SINGLE RAIL | 1990 Lin. ft | 1980 |
| | TEST PILE | 45 Lin. Ft. | 52.5 |
| | LOAD TESTING | 1 Each | 1 |
| | PILE (OTHER THAN TIMBER) | 16960 Lin Ft. | 16,980 |
| | MECHANICAL TAMPING | 125 Hr | 214 |
| | REINF. CONC. SLOPE PROTECTION | 3289 Sq Yd | 3473.63 |
| | ELECTRICAL WORK BRIDGES | 1 Lump | 1403.06 |
| 15 | 3" RIDGID STEEL CONDUIT | 1,030 Lin. Ft. | 1,030 |

GENER

DESIGN SPECIFICATIONS:
A.A.S.H.O. Standard Specification For

CONSTRUCTION SPECIFICATIONS:
Materials, Construction And Workma
For Road And Bridge Construction, 1960
Request For Bids

LIVE LOAD:
M20-S16-44 Interstate Alternate L

ALLOWABLE STRESSES:
Structural Steel
Reinforcing Steel
$f_c$-Cast In Place Concrete In Compres
$f_c'$-Ultimate Compressive Strength

STRUCTURAL STEEL:
Unless Otherwise Noted, Structural
For Girders, Shall Conform To A.S.T.M. Designa

CONCRETE:
Class "A" concrete AE With Type II Ce

REINFORCEMENT:
All Reinforcing Steel Bars Shall Be
Designation M-31 And Shall Have Defor

Exposed corners at joint filler and open jo

FOUNDATION:
Foundations May Be Approved At Le
Shall Be Driven, For Length Using Dr

DATUM:
All Elevations Refer To United States

BENCH MARK:

SHOP DRAWINGS:
All Shop Drawings Shall Be Approved

**FOR INFORMATION ONLY**

DGN Files 3P, PWIndex\16721\4433_C-043-01_Form1Pandm
02-MAY-2005

| FED. ROAD DIST. NO. | STATE | FED. AID PROJ. NO. | FISCAL YEAR | SHEET NO. | TOTAL SHEETS |
|---|---|---|---|---|---|
| VI | UTAH | | | | |

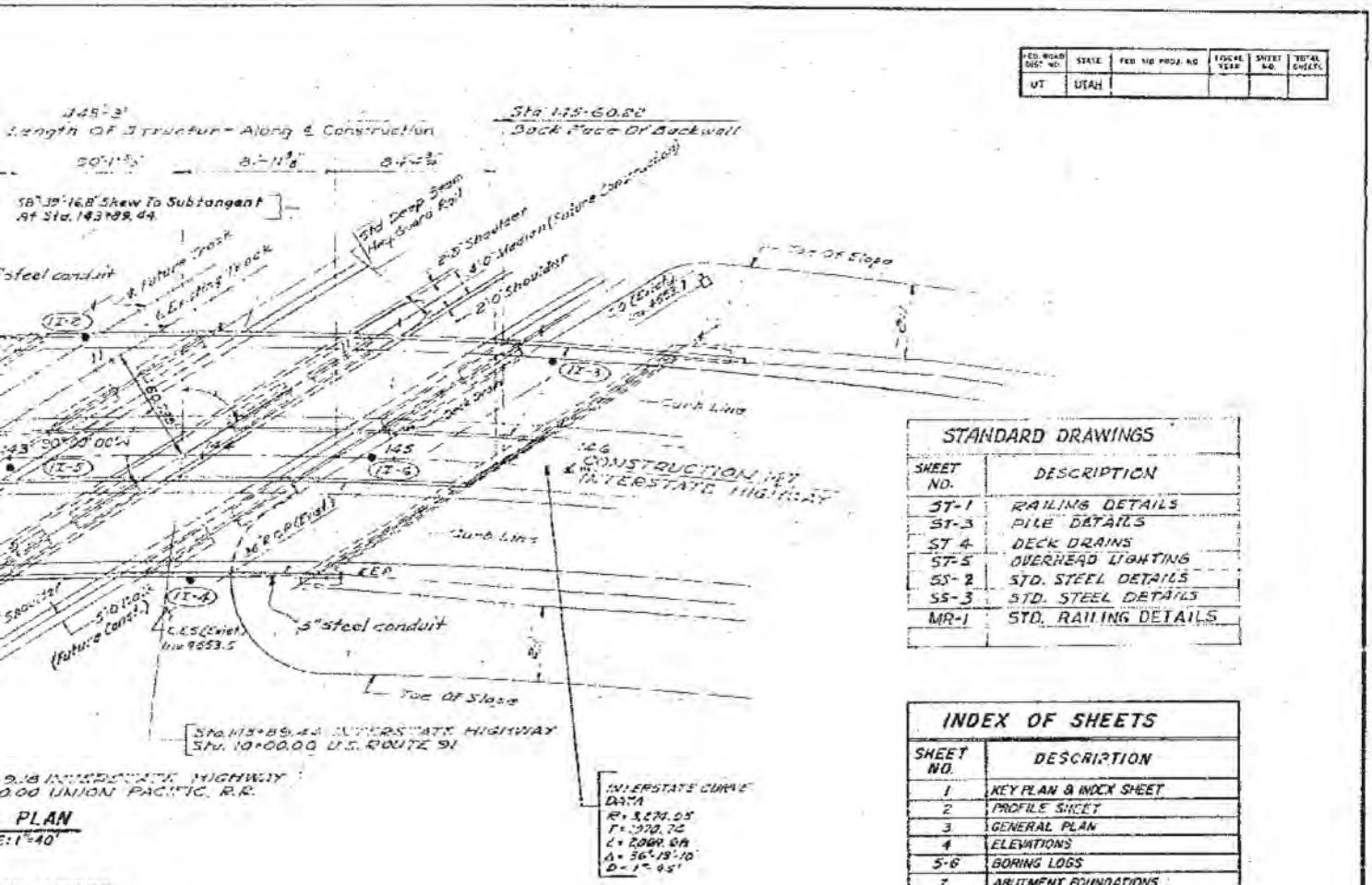


9.18 INTERSTATE HIGHWAY
0.00 UNION PACIFIC R.R.

## PLAN

E: 1" = 40'

## STANDARD DRAWINGS

| SHEET NO. | DESCRIPTION |
|---|---|
| ST-1 | RAILING DETAILS |
| ST-3 | PILE DETAILS |
| ST 4 | DECK DRAINS |
| ST-5 | OVERHEAD LIGHTING |
| SS-2 | STD. STEEL DETAILS |
| SS-3 | STD. STEEL DETAILS |
| MR-1 | STD. RAILING DETAILS |

## INDEX OF SHEETS


| SHEET NO. | DESCRIPTION |
|---|---|
| 1 | KEY PLAN & INDEX SHEET |
| 2 | PROFILE SHEET |
| 3 | GENERAL PLAN |
| 4 | ELEVATIONS |
| 5-6 | BORING LOGS |
| 7 | ABUTMENT FOUNDATIONS |
| 8 | PIER FOUNDATIONS |
| 9 | ABUTMENT NO. 1 |
| 10 | CURTAIN WALL - ABUTMENTS NO. 1 & 3 |
| 11 | ABUTMENT NO. 3 |
| 12 | ABUTMENT NO. 2 |
| 13 | CURTAIN WALL - ABUTMENTS 2 & 4 |
| 14 | ABUTMENT NO. 4 |
| 15 | ABUTMENT DETAILS |
| 16 | WINGWALLS |
| 17-20 | PIERS NO. 1 THRU NO. 6 |
| 21 | FRAMING PLAN |
| 22 | DECK REINFORCING PLAN |
| 23 | STRINGER SCHEDULE |
| 24-25 | STEEL DETAILS |
| 26 | CONCRETE DETAILS |
| 27 | SCREED ELEVATIONS |
| 28-29-30 | REINFORCING SCHEDULE |
| 31 | REINF. CONC. SLOPE PROTECTION |
| 31a | ELECTRICAL WORK BRIDGES |


## AL NOTES

Highway Bridges, 1961 Edition

...ns Shall Be In Accordance With The State Standard Specifications ... Edition And Supplements Thereto Which Are In Effect At Date Of

...ding In Accordance With A.A.S.H.O. Specifications Of 1961

...sion

18,000 p.s.i.
20,000 p.s.i.
1,200 p.s.i.
3,000 p.s.i.

... Steel Shall Conform To A.S.T.M. Designation A-7, Structural Steel ...tion A 373.

...w Alesti Cement Shall Be Used Throughout

...New Billet Steel, Intermediate Grade, Conforming To A.A.S.H.O. ...mations Conforming To A.A.S.H.O. Designation M-121

IG-15-6 (20) 277 2nd Contr.
I-15-6 (19) 276 3rd Contr.

...nts to be beveled ½" or rounded.

...ecessary, As Suit Conditions Encountered In Construction. All Piles ... Of Steam Hammer Or Diesel And Pre Coring If Necessary.

...as Coast And Geodetic Survey Mean Sea Level Datum Of 1934

Before Fabrication Of Steel

N.J.S. 3-21-63 PC-18, 19 & 20 (PIERS)

REGISTERED PROFESSIONAL ENGINEER No. 2300 B. JACK STONER STATE OF UTAH

SHEET 1 OF 31 SHEETS

UTAH STATE ROAD COMMISSION
SALT LAKE CITY, UTAH
BRIDGE DEPARTMENT

# EAST LEHI U.P. & U.S. 91 OVERPASS

445'-3" O. TO O. HOR. CURVE
STA. 143+89.44
LEHI PROVO. UTAH COUNTY

SCALE AS NOTED

DESIGN AND DRAWING BY
WESTERN ENGINEERS, INC. AND
EDWARDS AND KELCEY
CONSULTING ENGINEERS

SUBMITTED BY B. Jack Stoner
CHIEF ENGINEER
UTAH ENGR. LIC. NO. 2388

C-343

FINAL 1-5-65

STRUCTURE

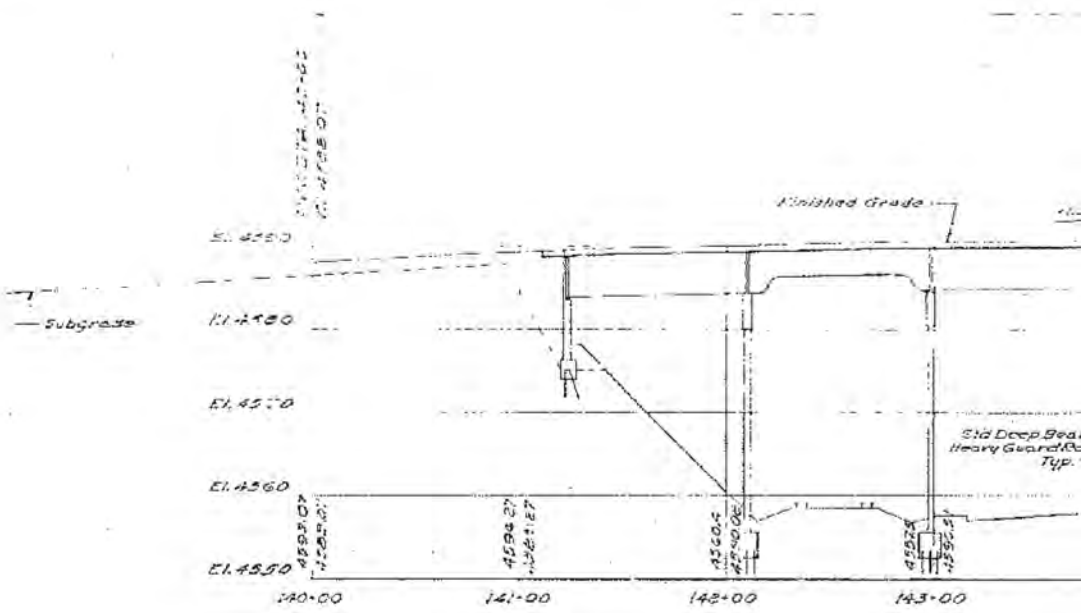


Sta. 143+89.44 INT
Sta. 10+00.00 U.S.R

**INTERSTATE**

SCALE

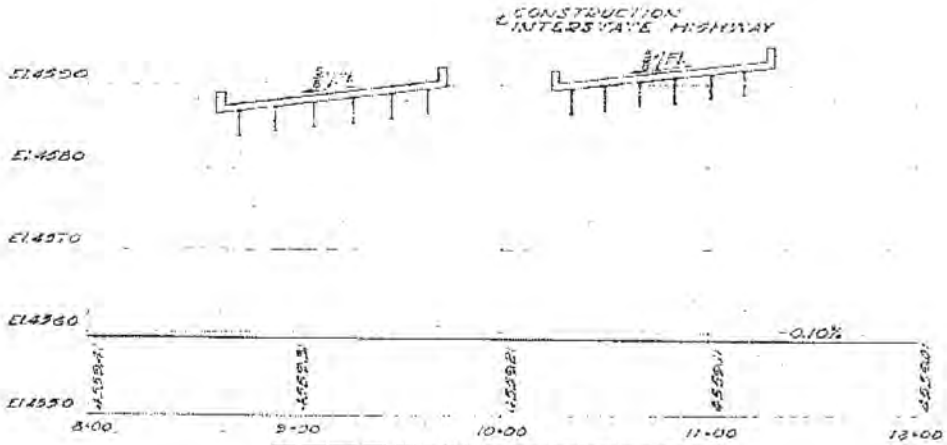


Sta. 10+00.00 UNION PACIFIC R.R.
Sta. 142+65.18 INTERSTATE HIGHWAY

**UNION PACIFIC R.R. PROFILE**

SCALE: 1"=10' VERT.
1"=40' HOR.

**FOR INFORMATION ONLY**

DGN File: IP_PWPlans\16721\4433.C-343-82_forinfo.dgn

82-MW-2885

| FED AID DIST. NO. | STATE | FED. AID PROJ. NO. | FISCAL YEAR | SHEET NO. | TOTAL SHEETS |
|---|---|---|---|---|---|
| 17 | UTAH | | | | |

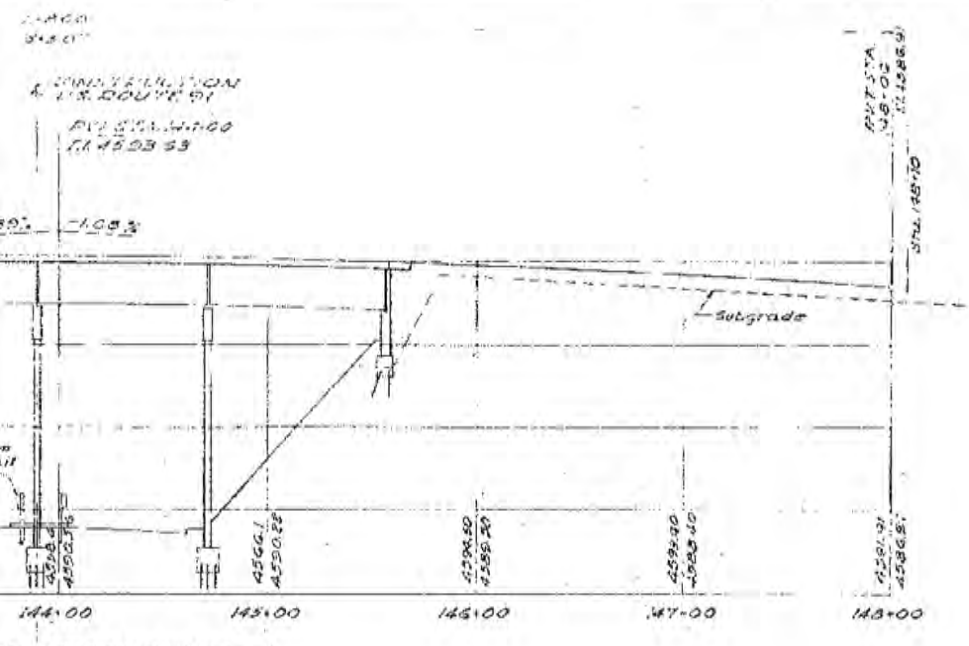


INTERSTATE HIGHWAY
ROUTE 91

## HIGHWAY PROFILE

SCALE: 1"=10' VERT.
1"=40' HOR.

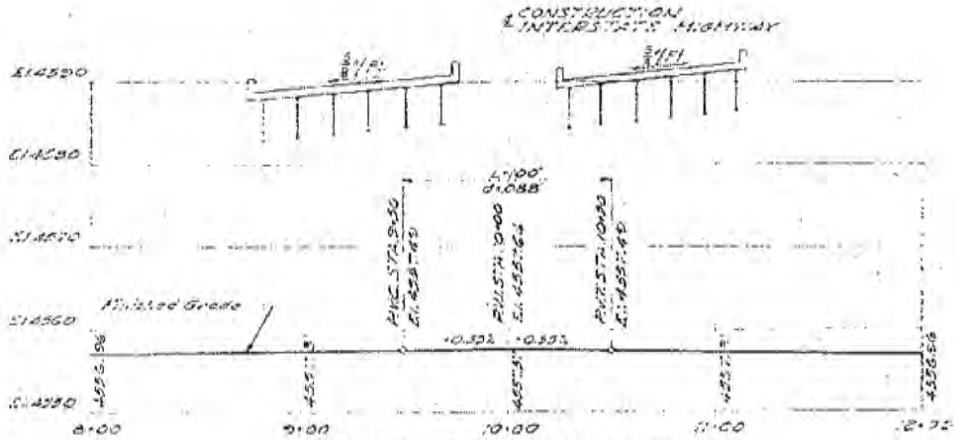


STA. 10+00.00 U.S. ROUTE 91
STA. 145+85.44 INTERSTATE HIGHWAY

## U.S. ROUTE 91 PROFILE

SCALE: 1"=10' VERT.
1"=40' HOR.

PROFILE SHEET

IG-15-6(20)277 2nd Contr.
I-15-6(19)276 3rd Contr.

SHEET 2 OF 31 SHEETS

UTAH STATE ROAD COMMISSION
SALT LAKE CITY, UTAH
BRIDGE DEPARTMENT

EAST LEHI U.P. & U.S. 91
OVERPASS
445'-3" O. TO O. HOR. CURVE
STA. 143+89.44
LEHI PROVO. UTAH COUNTY

DESIGNED BY L.B. REVIEWED H.S. NOTTED
DRAWN BY Z.Q.
CHECKED BY
ESTIMATED BY C.B.S. 8-64 CHIEF BRIDGE DESIGNER

DWG. No. C-343

DESIGN AND DRAWING BY
WESTERN ENGINEERS, INC. AND
EDWARDS AND KELCEY
CONSULTING ENGINEERS

SUBMITTED BY [signature] CHIEF ENGINEER
UTAH CHIEF LIC. NO. 2-723

STRUCTURE I-I

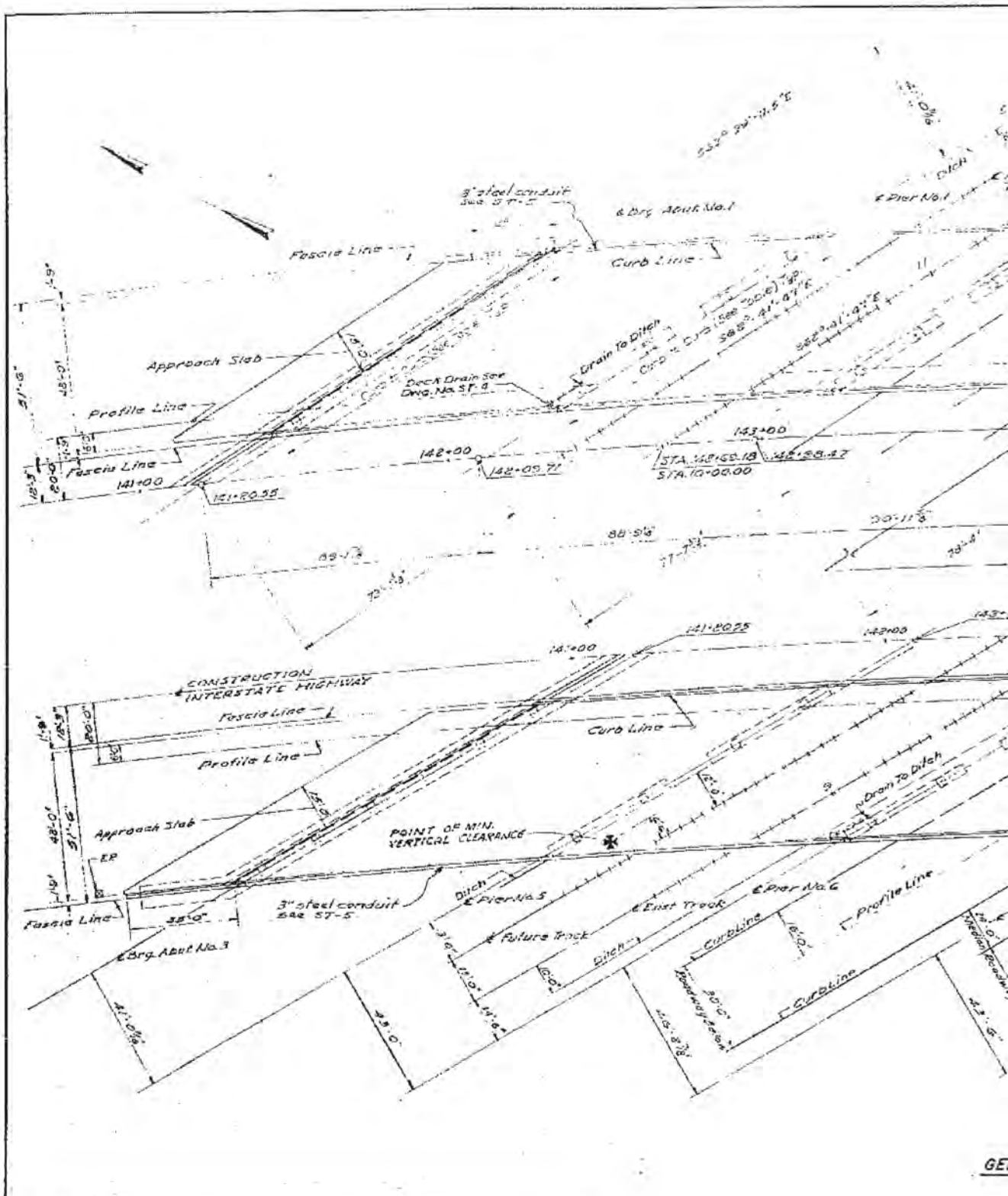


**FOR INFORMATION ONLY**

| FED ROAD DIST. NO. | STATE | FED. AID PROJ. NO. | FISCAL YEAR | SHEET NO. | TOTAL SHEETS |
|---|---|---|---|---|---|
| UT | UTAH | | | | |

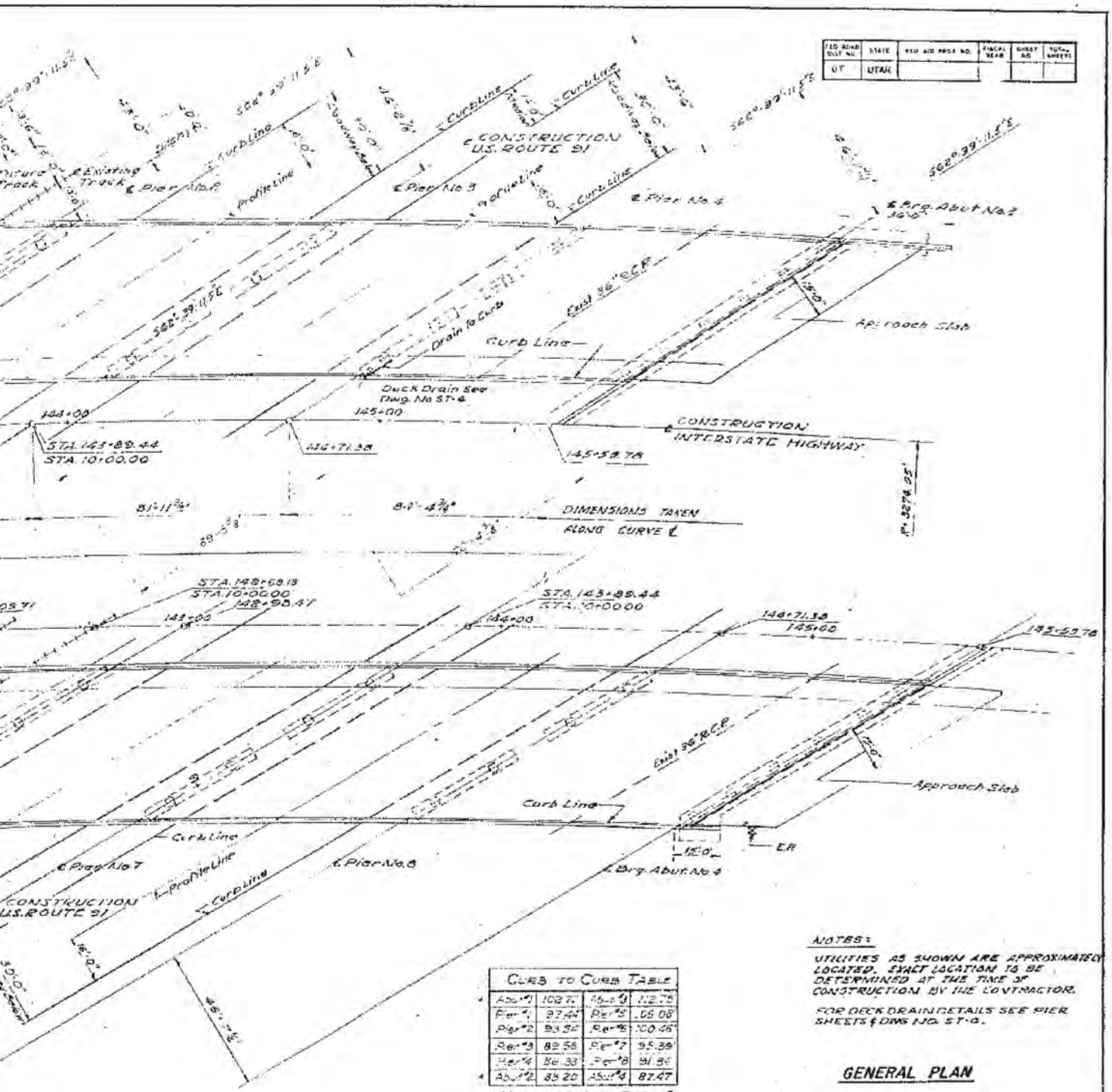


| CURB TO CURB TABLE | | | |
|---|---|---|---|
| Abut #1 | 102.72 | Abut #3 | 112.76 |
| Pier #1 | 97.44 | Pier #5 | 105.08 |
| Pier #2 | 93.52 | Pier #6 | 100.46 |
| Pier #3 | 89.58 | Pier #7 | 95.38 |
| Pier #4 | 85.33 | Pier #8 | 91.85 |
| Abut #2 | 89.20 | Abut #4 | 87.47 |

℄ Measured along face of Abut. Backwall
Pier Dimensions along ℄ of Piers

NOTES:

UTILITIES AS SHOWN ARE APPROXIMATELY LOCATED. EXACT LOCATION TO BE DETERMINED AT THE TIME OF CONSTRUCTION BY THE CONTRACTOR.

FOR DECK DRAIN DETAILS SEE PIER SHEETS & DWG NO. ST-4.

## GENERAL PLAN

NERAL PLAN
SCALE: 1"=20'

SHEET 3 OF 31 SHEETS

IG-15-6(20)277 2nd Contr.
I-15-6(19)276 3rd Contr.

DESIGN AND DRAWING BY
WESTERN ENGINEERS, INC. AND
EDWARDS AND KELCEY
CONSULTING ENGINEERS

SUBMITTED BY: CHIEF ENGINEER
UTAH ENGR. LIC. NO. 2388

UTAH STATE ROAD COMMISSION
SALT LAKE CITY, UTAH
BRIDGE DESIGN DIV.

EAST LEHI U.P. & U.S.91 OVERPASS
445'-3" O.TO O. HOR. CURVE
STA 143+89.44
LEHI PROVO. UTAH COUNTY

DESIGNED BY J.L.B. SCALE AS NOTED
DRAWN BY T.Q. DATE June 8, 1965
TRACED BY
CHECKED BY CEC
CHIEF BRIDGE ENGINEER

NO.
NO.
DWG. NO. C-345

STRUCTURE I-1

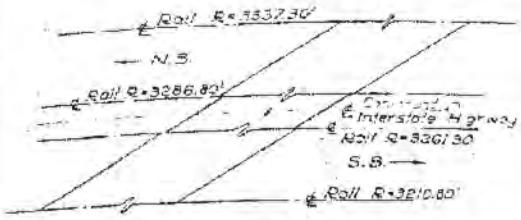


RAIL PLAN
SCALE: 1" = 60'-0"

NOTE:
For Railing Details See Drg. No. ST-1 and Sheets 10 & 12 for Spacing on Closure Wall Parapet.

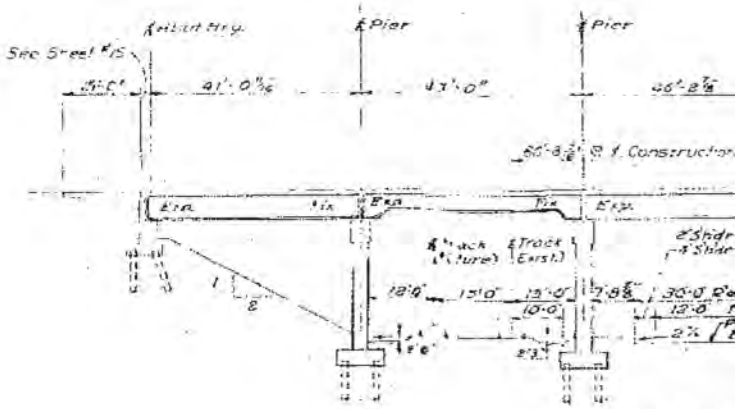


SQUARE LONGI
SCALE

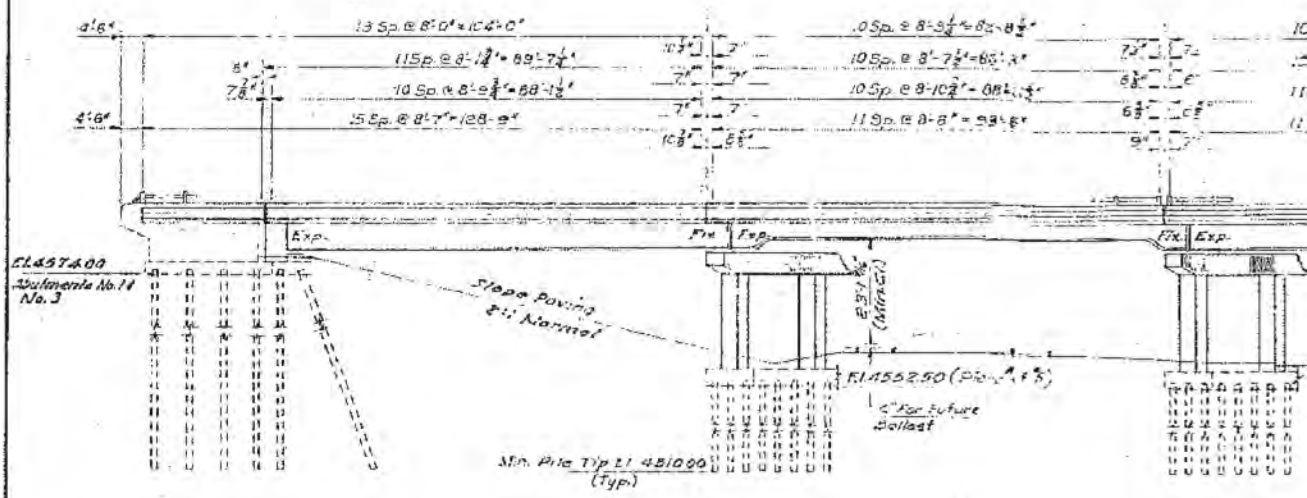


**FOR INFORMATION ONLY**

DGN Files: IP, PwPubes\16721\4433_C-043-84_FrontFoundation
02-MAY-2005

| FED. RTE. DIST. NO. | STATE | FED. AID PROJ. NO. | FISCAL YEAR | SHEET NO. | TOTAL SHEETS |
|---|---|---|---|---|---|
| UT | UTAH | | | | |

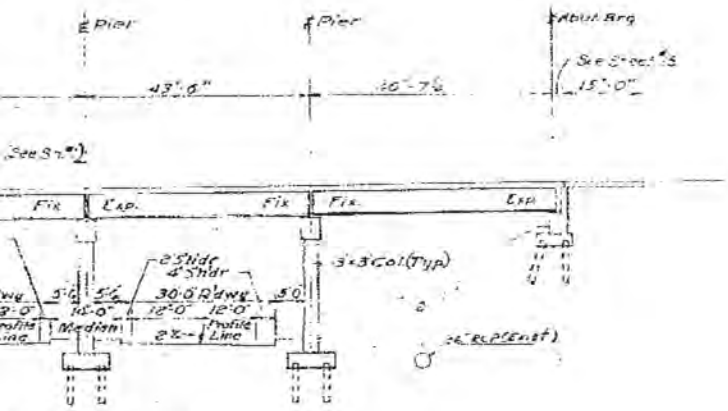


## TUDINAL SECTION

: 1/16"=1'-0"

NOTES:

FOR JOINT FILLER DETAILS AT PARAPETS SEE SHEET 8G

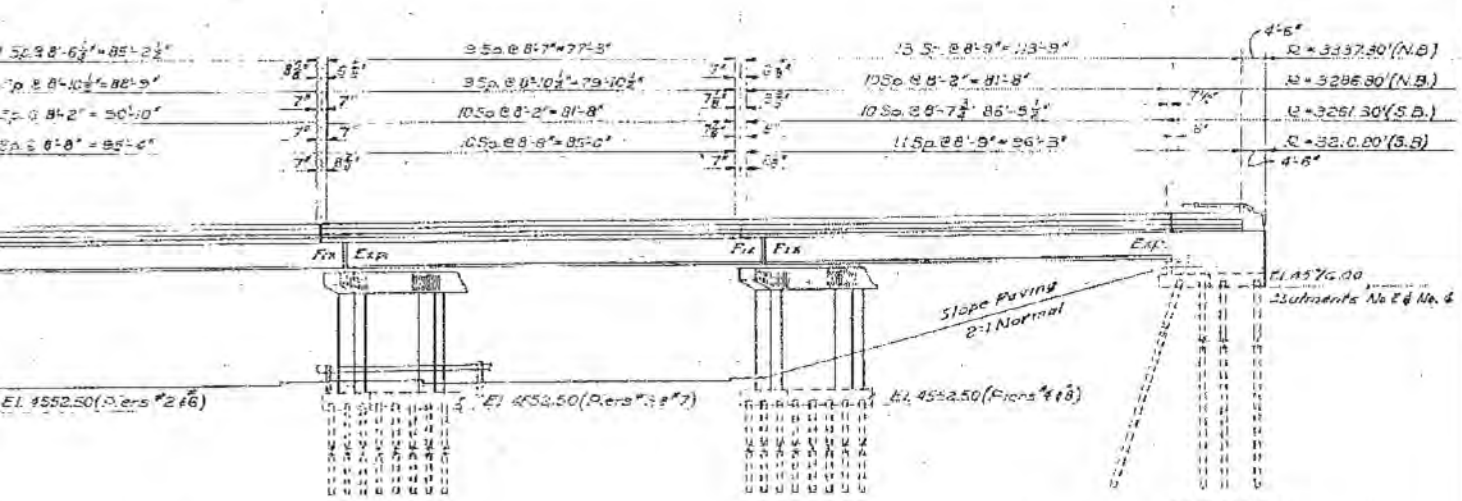


## ELEVATION

SCALE: 1/16"=1'-0"

## ELEVATION

SHEET 4 OF 31 SHEETS

16-15-6 (20) 277 2nd Contr
I-15-6 (19) 276 3rd Contr.

DESIGN AND DRAWING BY
WESTERN ENGINEERS, INC. AND
EDWARDS AND KELCEY
CONSULTING ENGINEERS

SUBMITTED BY: [signature] CHIEF ENGINEER
UTAH ENGR. LIC. NO. 2328

UTAH STATE ROAD COMMISSION
SALT LAKE CITY, UTAH
BRIDGE DEPARTMENT

EAST LEHI U.P. & U.S. 91 OVERPASS
445'-3" O. TO O. HOR. CURVE
STA. 143+89.44
LEHI-PROVO. UTAH COUNTY

DESIGNED BY: J.L.B.
DRAWN BY: T.R.
TRACED BY:
CHECKED BY: C.E.C.
SCALE: AS NOTED
ISSUED: June 13, 1963
APPROVED: [signature] CHIEF ENGINEER

BR. NO.
DWG. NO. C-343

STRUCTURE I-I.

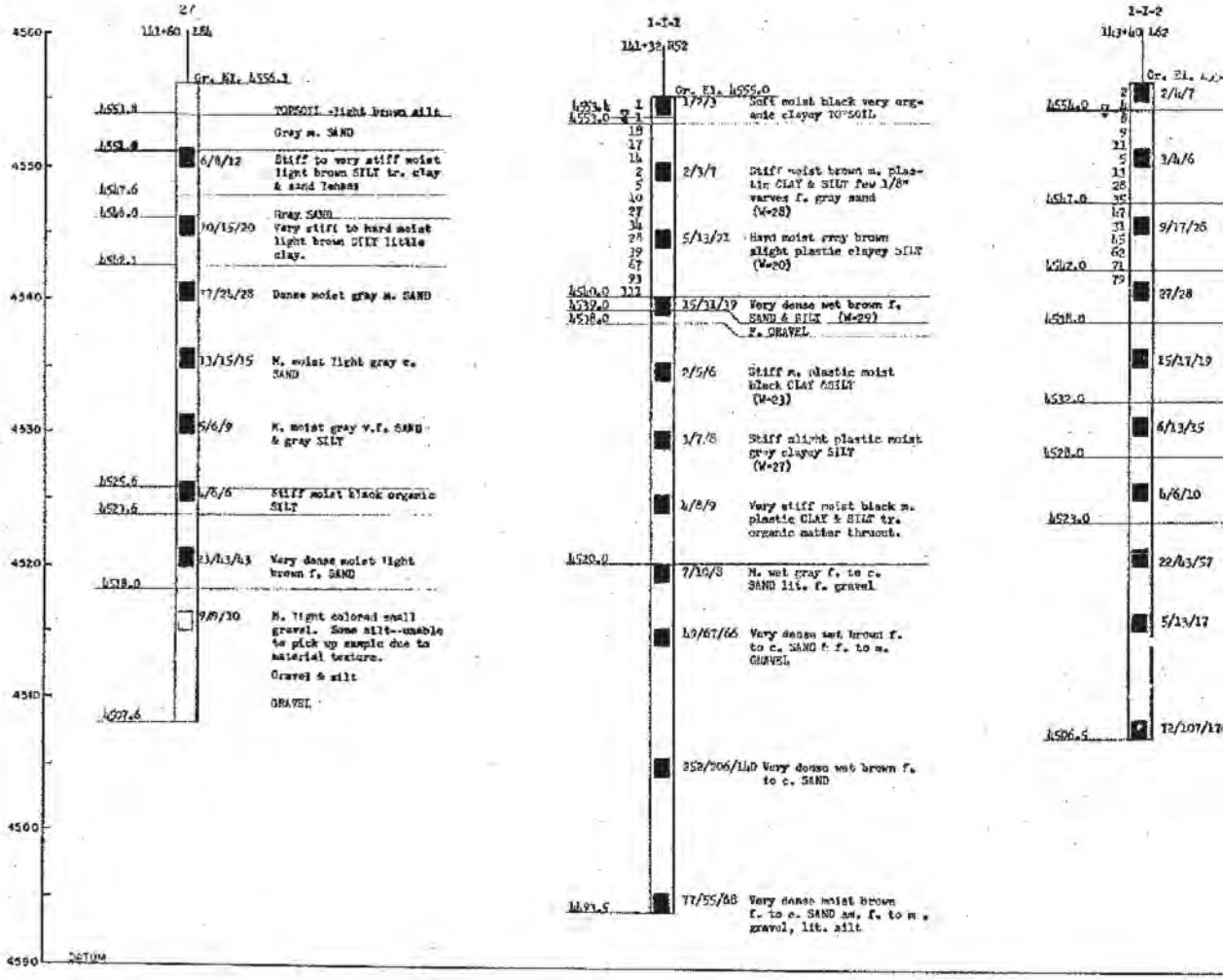


**FOR INFORMATION ONLY**

DGN Files IP PWBoxes\16721\4433.C-043-B5 FoundFoundat
02-MAY-2005

| FED. ROAD DIST. NO. | STATE | FED. AID PROJ. NO. | FISCAL YEAR | SHEET NO. | TOTAL SHEETS |
|---|---|---|---|---|---|
| UT | UTAH | | | | |

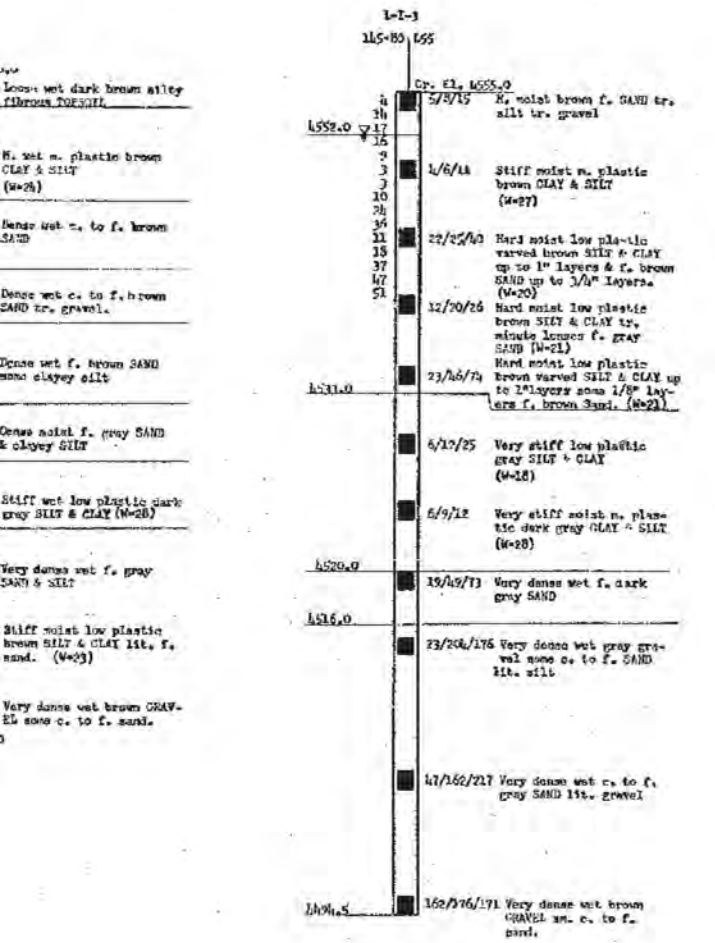


## LEGEND

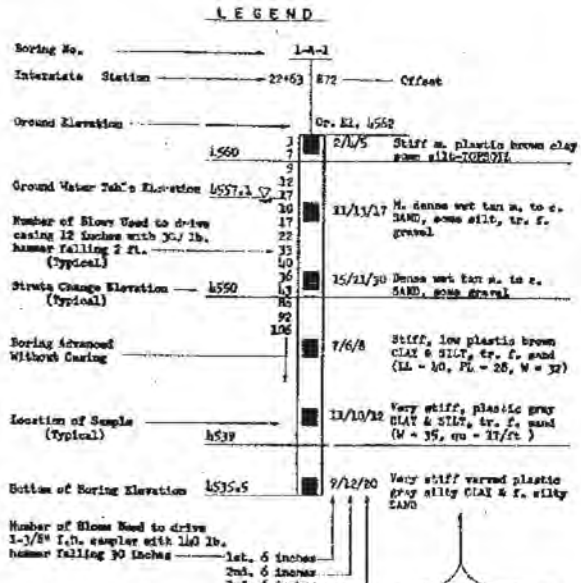


ABBREVIATIONS IF AND WHEN USED:

| | | |
|---|---|---|
| br. = brown | m. = medium | LL = Liquid Limit in % |
| gr. = gray | c. = coarse | PL = Plastic Limit in % |
| org. = organic | sm. = some | W = Natural Moisture Content in % |
| f. = fine | tr. = trace | qu = Unconfined compression test from pocket penetrometer in T/ft.² |
| v. f. = very fine | lit. = little | |

## BORING LOGS

SHEET 5 OF 31 SHEETS

IG-15-6(20) 277 2nd Contr.
I-15-6(19) 276 3rd Contr.

DESIGN AND DRAWING BY
WESTERN ENGINEERS, INC. AND
EDWARDS AND KELCEY
CONSULTING ENGINEERS

SUBMITTED BY [signature] CHIEF ENGINEER
UTAH ENGR. LIC. NO. [illegible]

UTAH STATE ROAD COMMISSION
SALT LAKE CITY, UTAH
BRIDGE DEPARTMENT

EAST LEHI U.P. & U.S. 91 OVERPASS
445'-3" O.TO O. HOR.CURVE
STA. 143+89.44
LEHI - PROVO UTAH COUNTY

DESIGNED BY EKK MADE AS NOTED
DRAWN BY EKK
TRACED BY EKK
CHECKED BY EKK

No. C-343

STRUCTURE 1-I

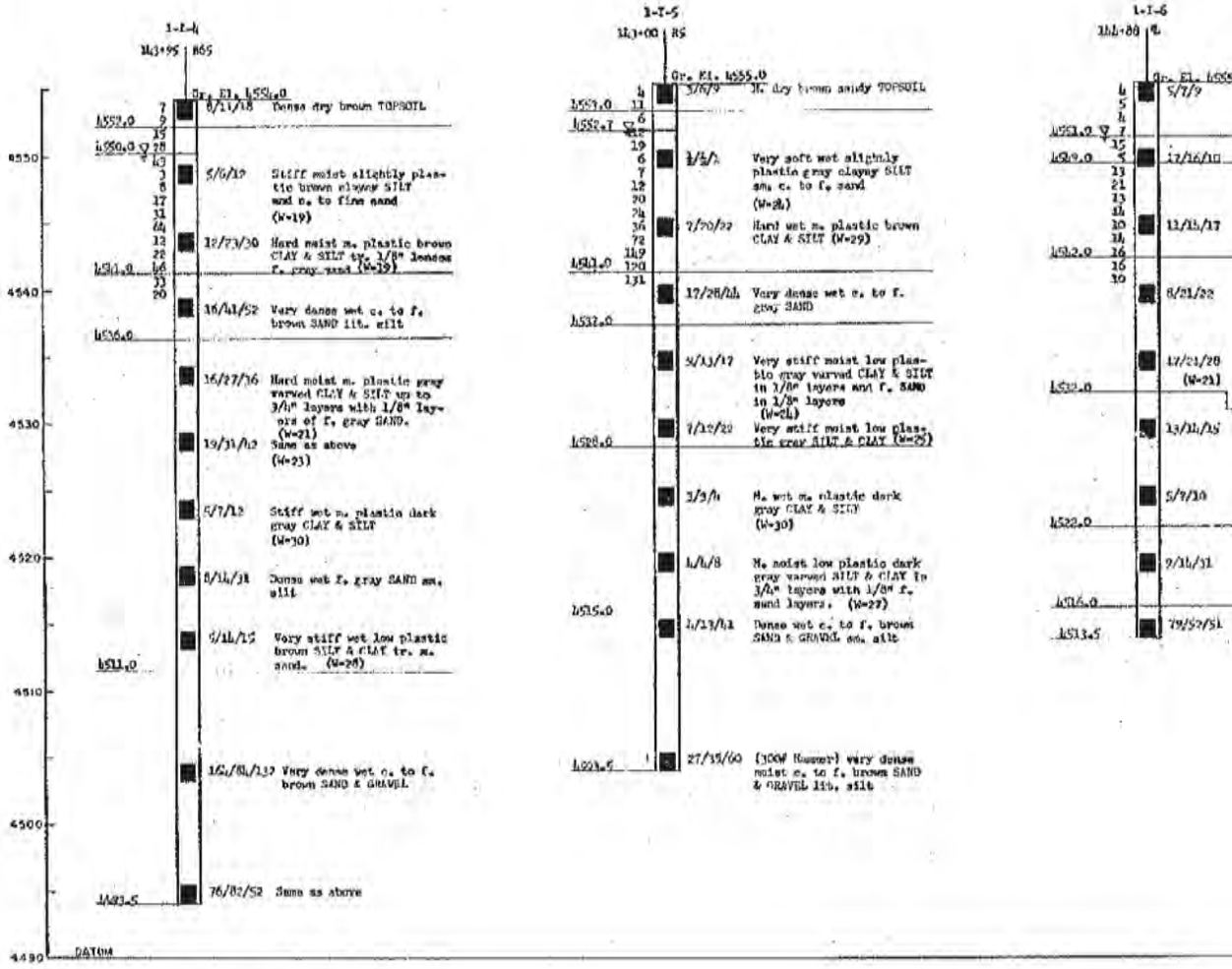


**FOR INFORMATION ONLY**

| FED. ROAD DIST. NO. | STATE | PROJ. NO. | FISCAL YEAR | SHEET NO. | TOTAL SHEETS |
|---|---|---|---|---|---|
| UT | UTAH | | | | |

## LEGEND

Boring No. — 1-A-1

Interstate Station — 22+63 — 2/2 — Offset

Ground Elevation — Gr. El. 4562

Ground Water Table Elevation 4557.2 ±

Number of Blows Used to drive casing 12 inches with 300 lb. hammer falling 2 ft. (Typical)

Strata Change Elevation — 4558 (Typical)

Boring Advanced Without Casing

Location of Sample (Typical) — 4539

Bottom of Boring Elevation — 4535.5

Number of Blows Used to drive 1-3/8" I.D. sampler with 140 lb. hammer falling 30 inches — 1st. 6 inches, 2nd. 6 inches, 3rd. 6 inches

| | | |
|---|---|---|
| 4560 | 3, 7, 9, 12, 17 | 2/4/5 — Stiff c. plastic brown clay some silt-TOPSOIL |
| | 10, 17, 22, 33, 40 | 17/13/17 — Medium wet tan m. to c. SAND, some silt, tr. f. gravel |
| | 36, 43, 85, 92, 105 | 25/21/30 — Dense wet tan m. to c. SAND, some gravel |
| | | 7/6/8 — Stiff, low plastic brown CLAY & SILT, tr. f. sand (LL = 40, PL = 28, W = 32) |
| | | 11/10/12 — Very stiff, plastic gray CLAY & SILT, tr. f. sand (W = 35, qu = 17/ft.) |
| | | 9/12/20 — Very stiff varved plastic gray silty CLAY & f. silty SAND |

visual soil description for each sample and results of classification tests, if any (Typical)

ABBREVIATIONS IF AND WHEN USED:

br. = brown
gr. = gray
org. = organic
f. = fine
v. f. = very fine
m. = medium
c. = coarse
sm. = some
tr. = trace
lit. = little
LL = Liquid Limit in %
PL = Plastic Limit in %
W = Natural Moisture Content in %
qu = Unconfined compression test from pocket penetrometer in T/ft.²

10.0 — Very stiff moist brown silty TOPSOIL

Dense wet c. to f. brown SAND & clayey SILT

Dense wet f. brown SAND

Dense moist f. brown SAND sm. clayey silt

Hard moist low plastic gray varved SILT & CLAY up to ¼" layers sm. 1/8" lenses of gray f. sand changing to c. to f. gray SAND & GRAVEL

Very stiff moist dark gray low plastic SILT & CLAY tr. minute lenses f. sand (Ma23)

Very stiff wet m. plastic dark gray CLAY & SILT

Dense wet f. gray SAND sm. clayey silt

Very dense wet gray GRAVEL tr. c. to f. sand tr. silt

# BORING LOGS

SHEET 6 OF 31 SHEETS

16-15-6(20)277 2nd Contr.
16-15-6(19)276 3rd Contr.

UTAH STATE ROAD COMMISSION
SALT LAKE CITY, UTAH
BRIDGE DEPARTMENT

EAST LEHI U.P. & U.S. 91 OVERPASS

445'-3" O.TO O. HOR. CURVE

STA 1434 89.48
LEHI - PROVO — UTAH COUNTY

DESIGN AND DRAWING BY
WESTERN ENGINEERS, INC. AND
EDWARDS AND KELCEY
CONSULTING ENGINEERS

SUBMITTED BY — CHIEF ENGINEER
UTAH ENGR. LIC. NO.

REGISTERED PROFESSIONAL ENGINEER NO. 2888 H. JACK LONGSON STATE OF UTAH

DRAWN BY EAK — SCALE AS NOTED
SIGNED BY EAK — DATE Nov. 8, 1963
TRACED BY EAK — APPROVED D.L. Sharp
CHECKED BY EAK

NO. — DWG. NO. C-343

STRUCTURE 1-I

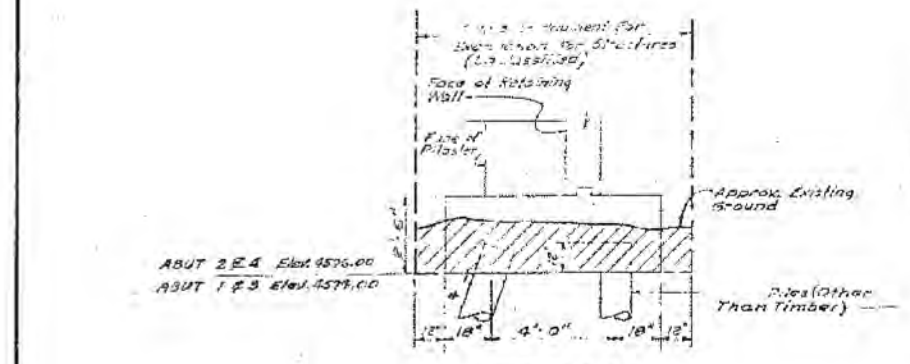


SECTION B-B
SCALE: 3/8" = 1'-0"

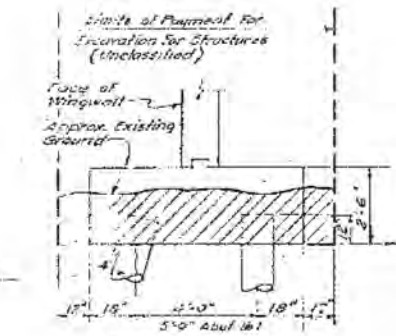


SECTION A-A
SCALE: 3/8" = 1'-0"

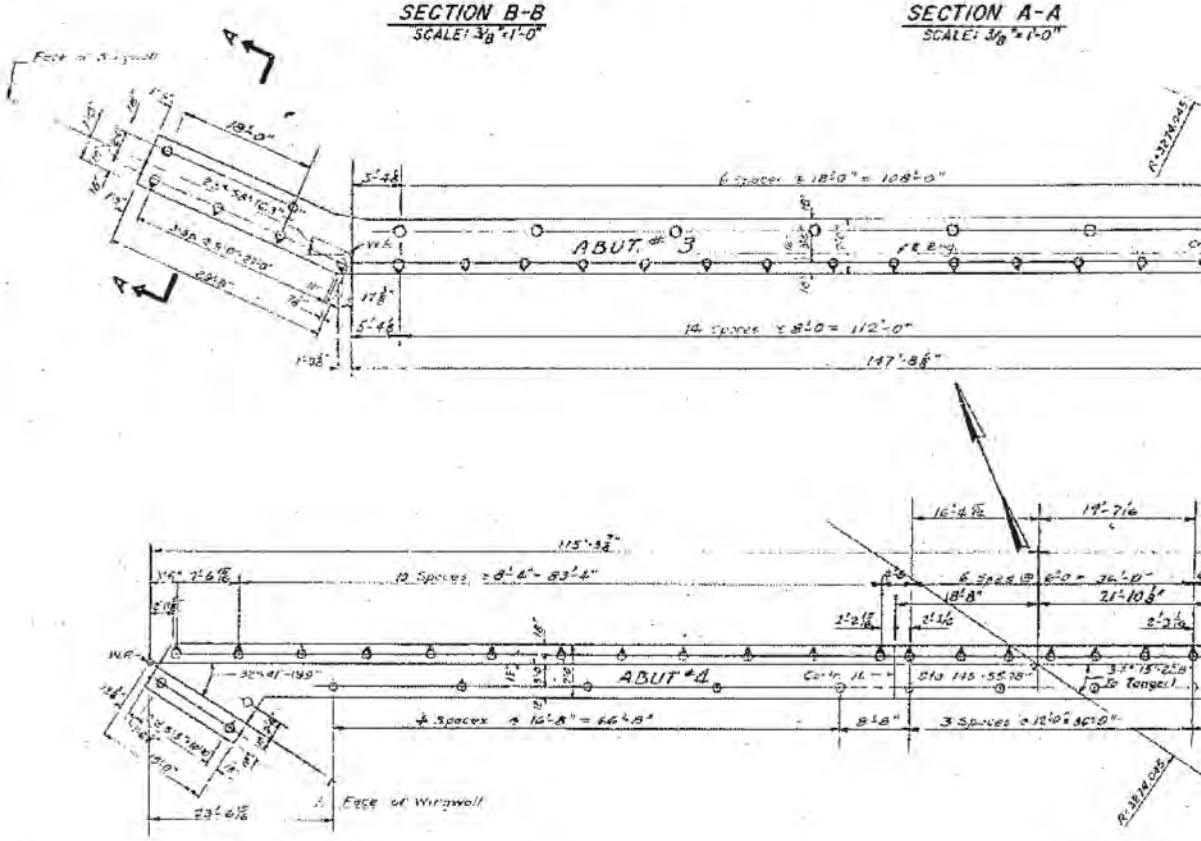


ABUTMENT FOU
SCALE: 3/32"

ESTIMATED PILE LENGTH:
ABUTMENTS NO. 1 & NO. 3 = 65'
ABUTMENTS NO. 2 & NO. 4 = 67'
MAXIMUM COMPUTED PILE LOAD = 49.3 TONS
FOR PILE TYPE, REINFORCEMENT,
& DOWELS SEE DRG. NO. SE-3
PILE DESIGN LOAD ..... 50 TONS
TIP OF PILE ELEV. — 4509

**FOR INFORMATION ONLY**

[redacted]

02-MAY-2005 DGN Files IP, PWPadmas\16721\4433_C-043-87_FoundCon

| FED. ROAD DIST. NO. | STATE | FED. AID PROJ. NO. | FISCAL YEAR | SHEET NO. | TOTAL SHEETS |
|---|---|---|---|---|---|
| UT | UTAH | | | | |

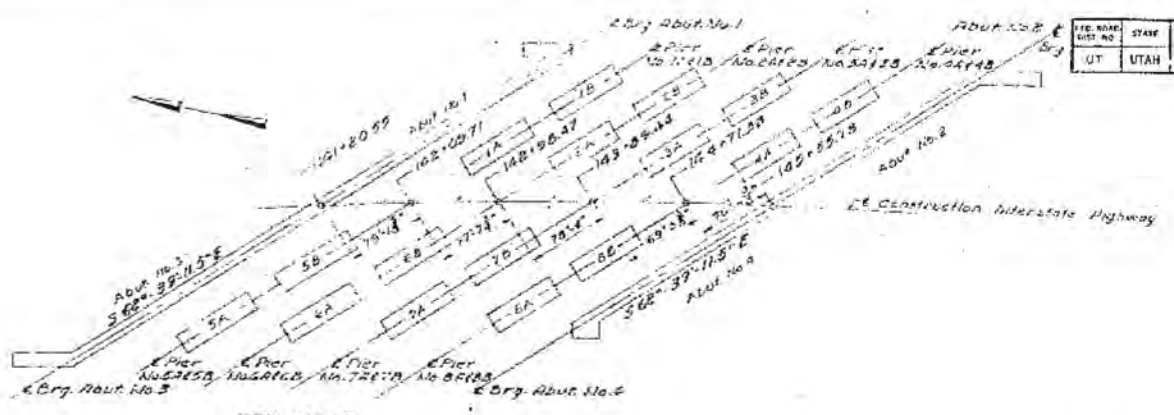


## KEY PLAN
NOT TO SCALE

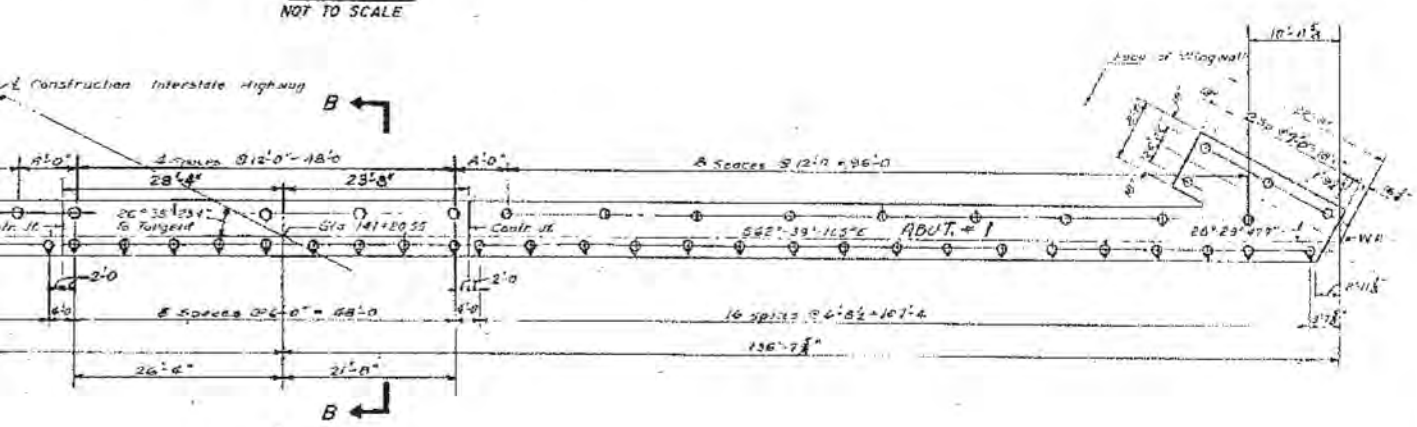


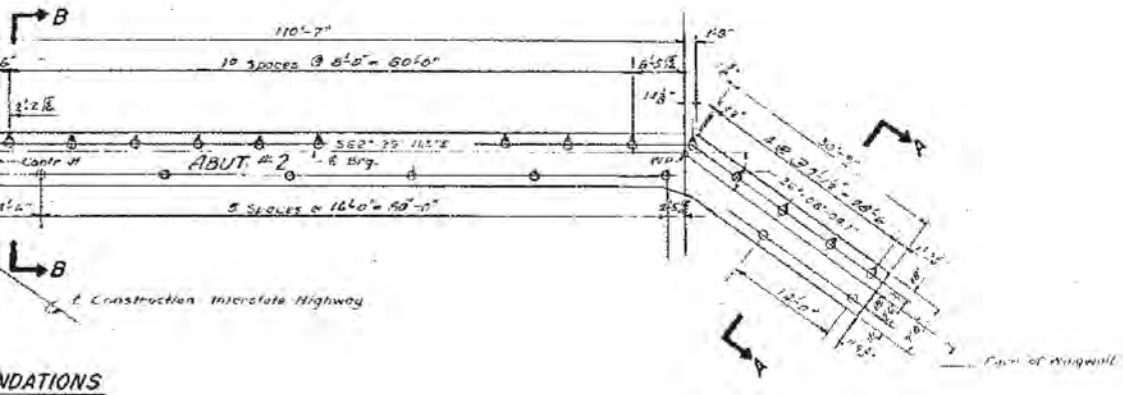


## NDATIONS
1'-0"

## ABUTMENT FOUNDATIONS

LEGEND
- O VERTICAL PILE
- O PILES BATTERED IN DIRECTION OF ARROW

1 SFM 4 to 1 Batter corrected to 1:4

TG-15-6(20)277 2nd Contr.
I-15-6(19)276 3rd Contr.

DESIGN AND DRAWING BY
WESTERN ENGINEERS, INC. AND
EDWARDS AND KELCEY
CONSULTING ENGINEERS

SUBMITTED BY: [signature] CHIEF ENGINEER
UTAH ENGR. LIC. NO. 2-7318

SHEET 7 OF 31 SHEETS

UTAH STATE ROAD COMMISSION
SALT LAKE CITY, UTAH
BRIDGE DEPARTMENT

EAST LEHI U.P. & U.S.91 OVERPASS
445'-3" O.TO O. HOR. CURVE
STA. 143+89.44
LEHI-PROVO. UTAH COUNTY

DESIGNED BY: J.S.Y. SCALE: AS NOTED
DRAWN BY: T.Q. ISSUED: 11-1965
TRACED BY: APPROVED: [signature] CHIEF BRIDGE ENGINEER
CHECKED BY: [signature]

DWG. No. C-343

STRUCTURE 1-15

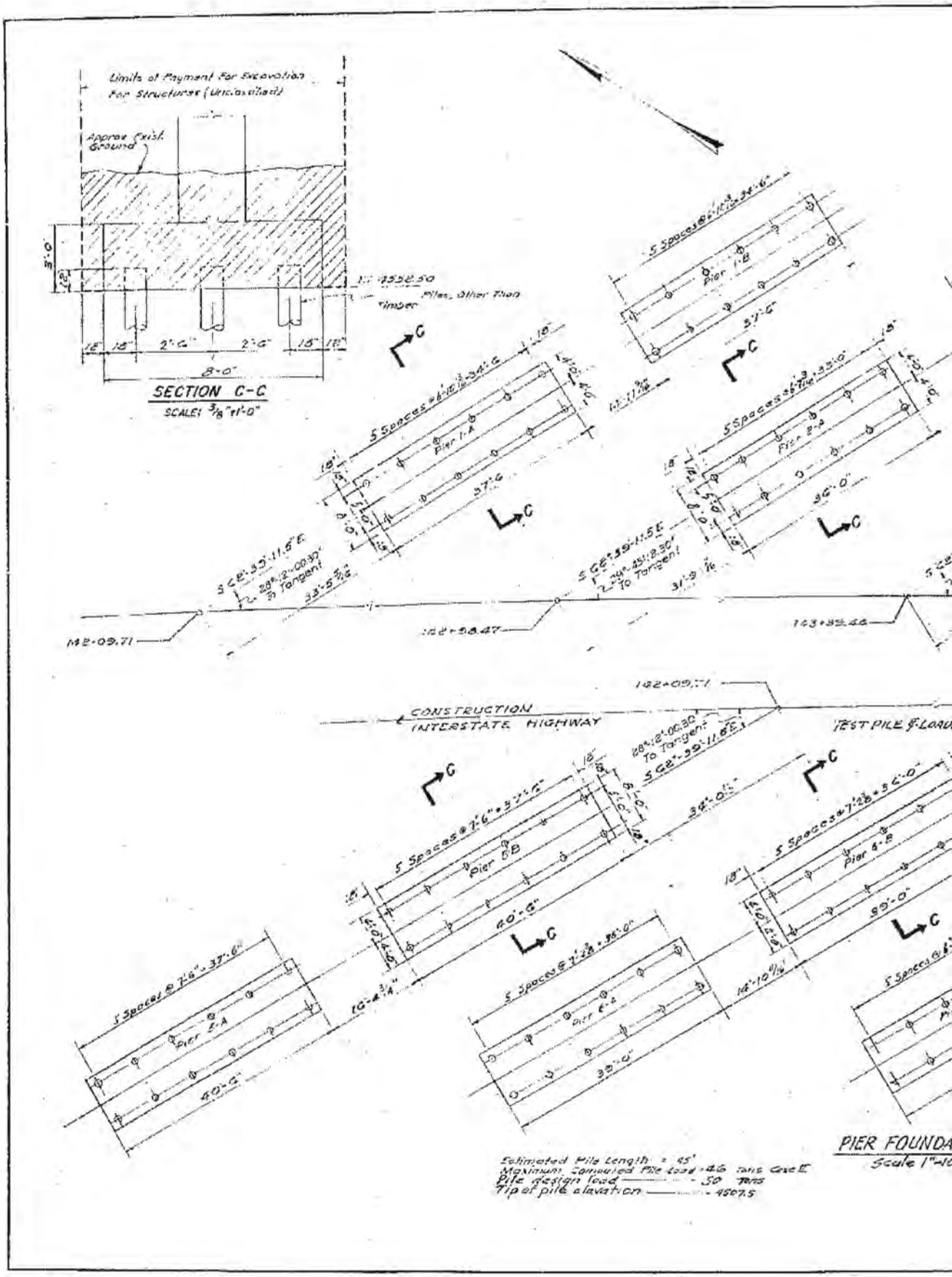
Limits of Payment For Excavation For Structures (Unclassified)
Approx. Finish Ground
Timber
Piles, Other Than
SECTION C-C
SCALE: 3/8"=1'-0"
5 Spaces @ 8'-10 3/16"=34'-6"
Pier 1-B
Pier 1-A
5 Spaces @ 8'-10 3/16"=35'-0"
Pier 2-A
5 S 62°-39'-11.5" E
28°-12'-00.30" To Tangent
CONSTRUCTION
INTERSTATE HIGHWAY
TEST PILE & LOAD
5 Spaces @ 7'-6"=37'-6"
Pier 5-B
5 Spaces @ 7'-6"=37'-6"
Pier 5-A
5 Spaces @ 7'-2 3/8"=34'-0"
Pier 6-A
5 Spaces @ 7'-2 3/8"=35'-0"
Pier 6-B
Estimated Pile Length = 95'
Maximum Computed Pile Load = 46 tons Case II
Pile design load ——— 50 tons
Tip of pile elevation ——— 4507.5
PIER FOUNDA
Scale 1"=10

**FOR INFORMATION ONLY**

| FED. ROAD DIST. NO. | STATE | FED. AID PROJ. NO. | FISCAL YEAR | SHEET NO. | TOTAL SHEETS |
|---|---|---|---|---|---|
| 6 | UTAH | | | | |

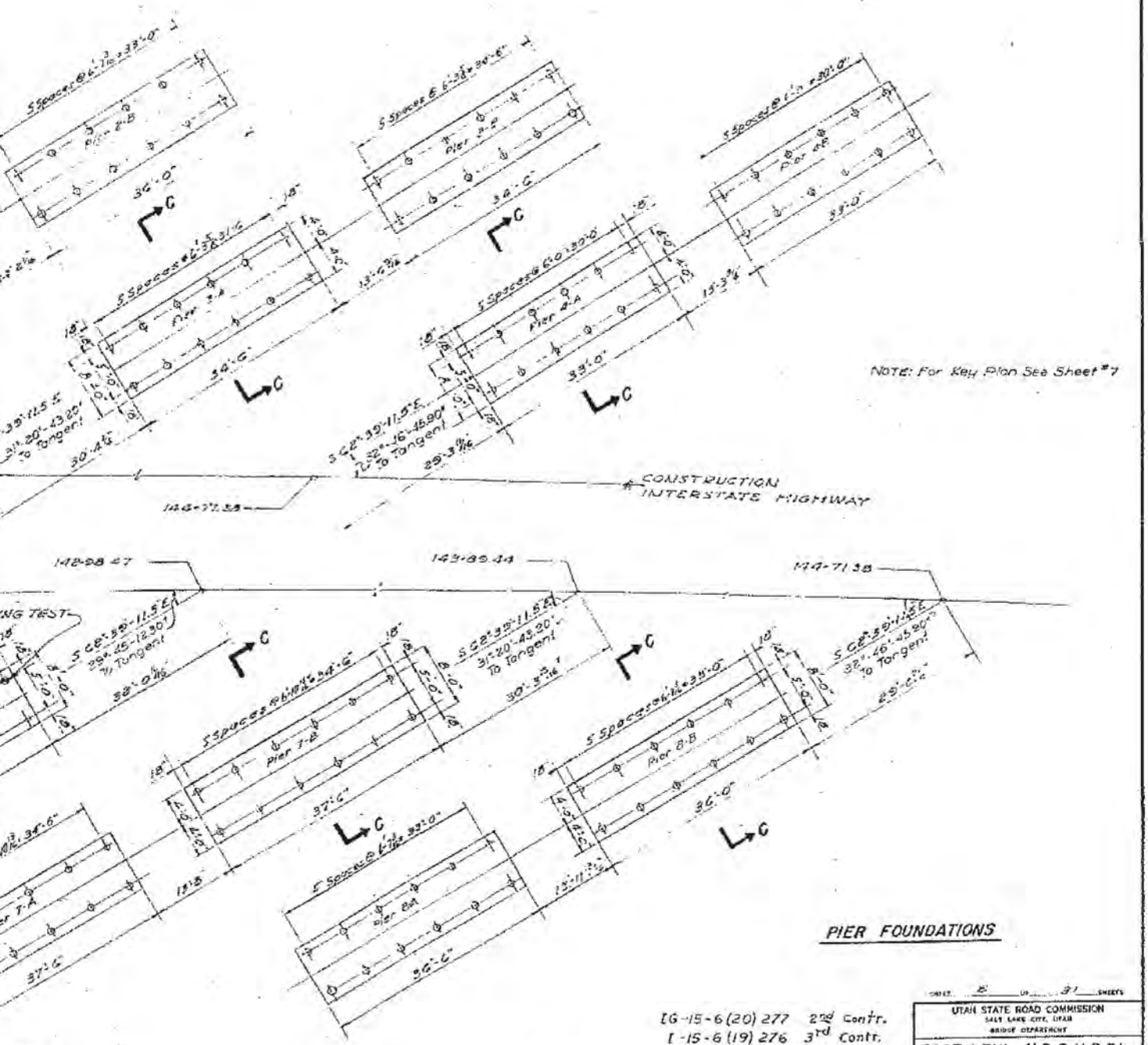


## PIER FOUNDATIONS

[G-15-6(20) 277 2nd Contr.
[-15-6(19) 276 3rd Contr.

LEGEND:
○ Vertical Pile
⊖ Test Pile & Loading Test

NOTES:
FOR PILE TYPE, REINFORCEMENT & DOWELS SEE DRG. NO. SE 3

REGISTERED PROFESSIONAL ENGINEER NO. 2388 B. HOLLOWAY STATE OF UTAH

DESIGN AND DRAWING BY
WESTERN ENGINEERS, INC. AND
EDWARDS AND KELCEY
CONSULTING ENGINEERS

SUBMITTED BY: H. Jack Hancock, CHIEF ENGINEER
UTAH ENGR. LIC. NO. 2-388

SHEET 8 OF 31 SHEETS

UTAH STATE ROAD COMMISSION
SALT LAKE CITY, UTAH
BRIDGE DEPARTMENT

EAST LEHI U.P. & U.S.91 OVERPASS
44°-3" O.TO O. HOR. CURVE
STA. 143+89.44
LEHI PROVO — UTAH COUNTY

DESIGNED BY: KY
DRAWN BY: TQ
CHECKED BY: PTG
SCALE: AS NOTED
ISSUED: 1-13-67
APPROVED: Bert Singleton, CHIEF BRIDGE ENGINEER
DWG. NO. C-343

STRUCTURE I-2

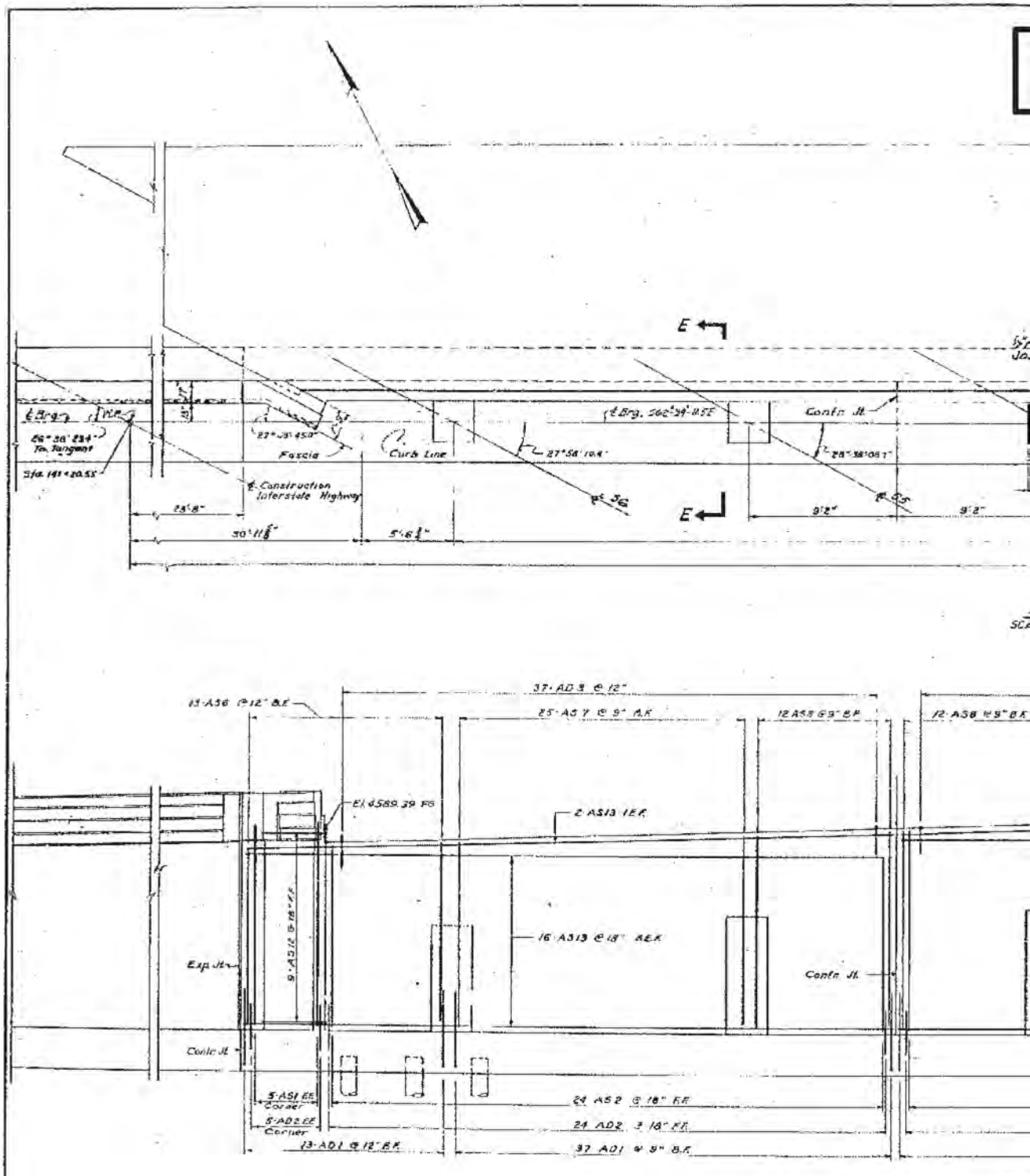


ELE
SCAL

NOTES:
FOR FOOTING LOCATION PLAN & PILE LOCATIONS SEE SHEET No 7.
FOR ELEVATION OF WINGWALL & FOOTING REINFORCING SEE SHEET No 16.
FOR SECTIONS NOT SHOWN, ANCHOR BOLT LOCATIONS, & EXPANSION & CONTRACTION JOINT DETAILS SEE SHEET No 15.
REINFORCING TO BE PLACED TO AVOID PILES

DGN Files IP_PWBridge\16721\4433_C-043-89_FrontFoundation
02-MAY-2005

**FOR INFORMATION ONLY**

| FED. ROAD DIST. NO. | STATE | FED. AID PROJ. NO. | FISCAL YEAR | SHEET NO. | TOTAL SHEETS |
|---|---|---|---|---|---|
| U7 | UTAH | | | | |

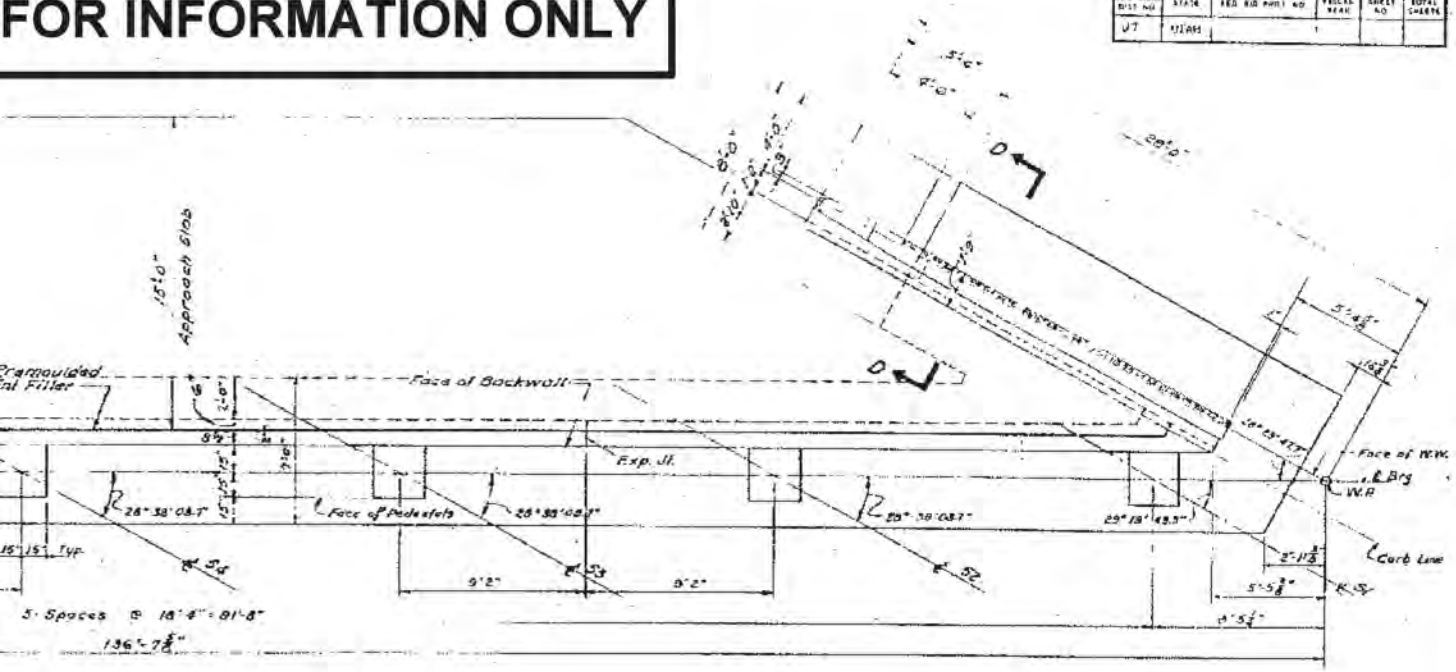


PLAN
SCALE: 1/4"=1'-0"

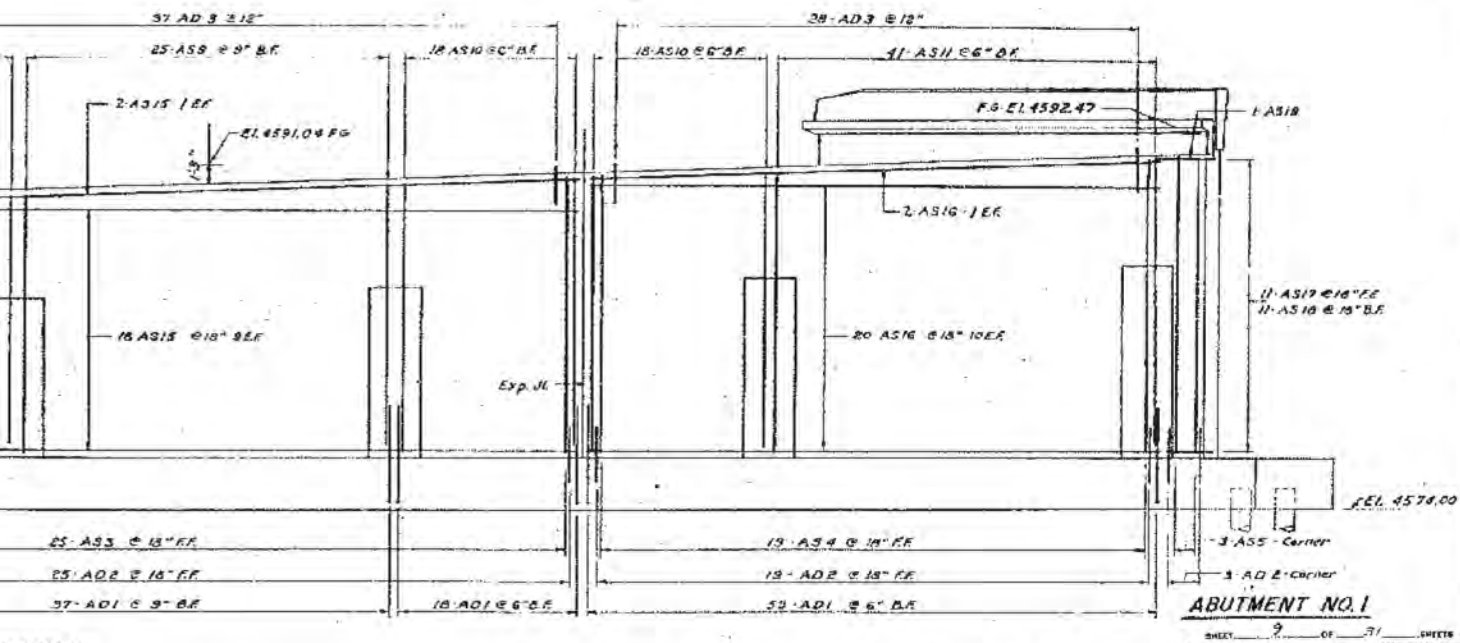


ELEVATION
SCALE: 1/4"=1'-0"

ABUTMENT NO. 1

SHEET 9 OF 31 SHEETS

| STR. No. | BEAM SEAT ELEVATION |
|---|---|
| 1 | 4585.76 |
| 2 | 4585.44 |
| 3 | 4584.93 |
| 4 | 4584.26 |
| 5 | 4583.60 |
| 6 | 4583.23 |

(G-15-6(20) 277 2nd contr.
I-15-6(19) 276 3rd contr.

DESIGN AND DRAWING BY
WESTERN ENGINEERS, INC. AND
EDWARDS AND KELCEY
CONSULTING ENGINEERS

SUBMITTED BY: R. Jack Edwards, CHIEF ENGINEER
UTAH ENGR. LIC. NO. 3 768

UTAH STATE ROAD COMMISSION
SALT LAKE CITY, UTAH
BRIDGE DEPARTMENT

EAST LEHI U.P. & U.S. 91 OVERPASS
449'-3" O. TO O. HOR. CURVE
STA. 143+89.44
LEHI PROVO UTAH COUNTY

DESIGNED BY K.K. SCALE AS NOTED
DRAWN BY E.G.C. ISSUED
TRACED BY APPROVED
CHECKED BY Y.G. CHIEF BRIDGE ENGINEER

DR. NO. DWG. NO. C-343

STRUCTURE 1-1

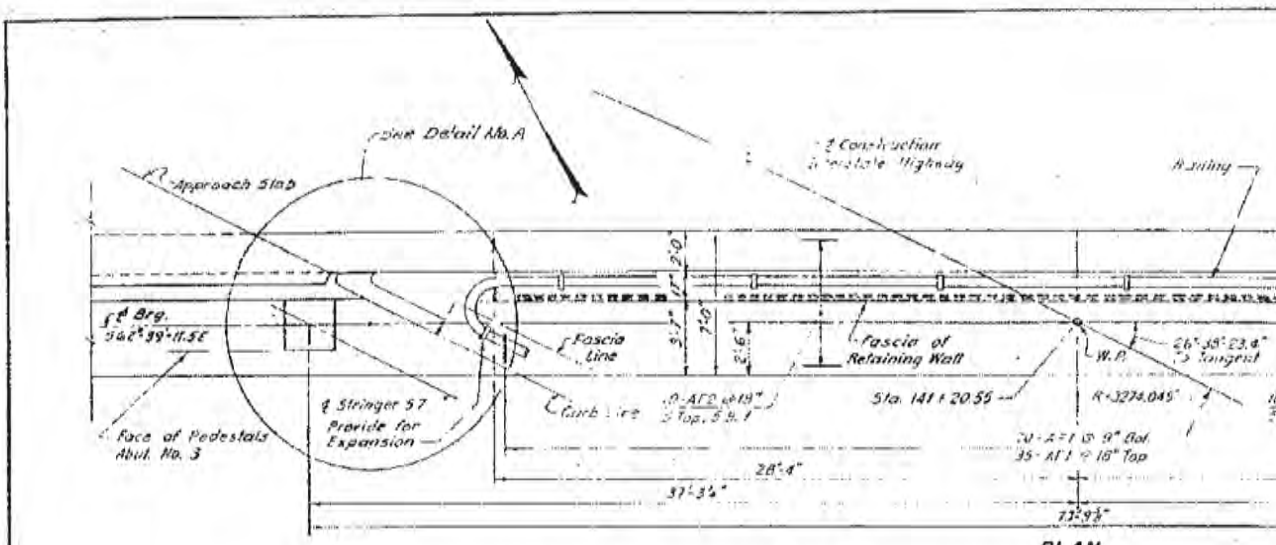


PLAN
SCALE: ¼"=1'-0"

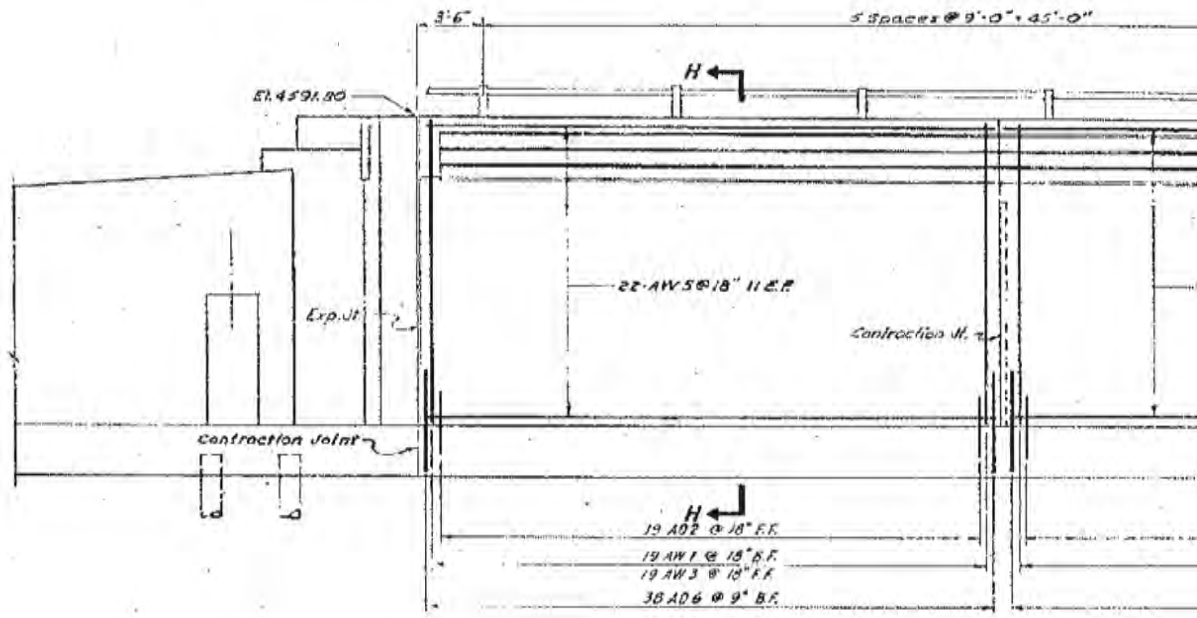


ELEVATION
SCALE: ¼"=1'-0"

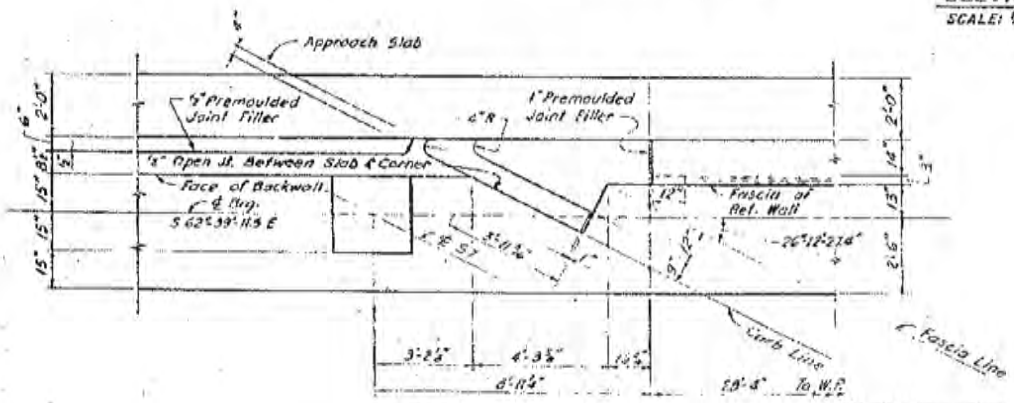


DETAIL A
SCALE: ⅜"=1'-0"

FOR I

DGN Files: TP_PaPrdm\15672\4433_C-343-12_Foundation
02-MAY-2025

| FED. ROAD DIST. NO. | STATE | FED. AID PROJ. NO. | FISCAL YEAR | SHEET NO. | TOTAL SHEETS |
|---|---|---|---|---|---|
| UT | UGNH | | | | |

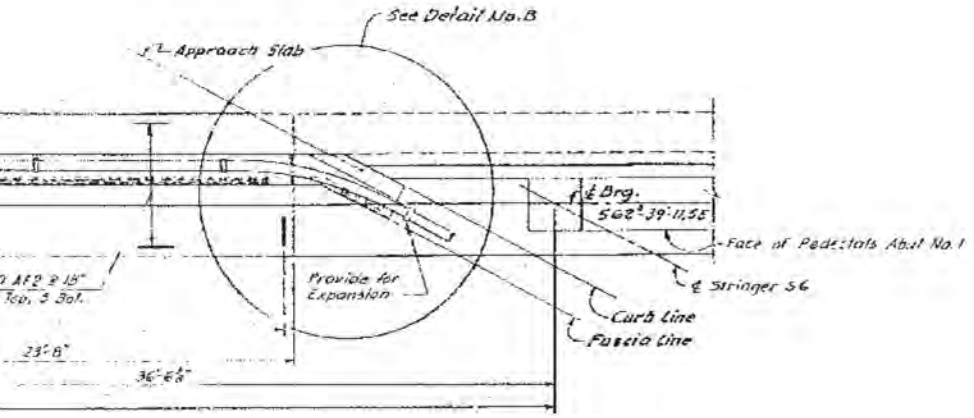


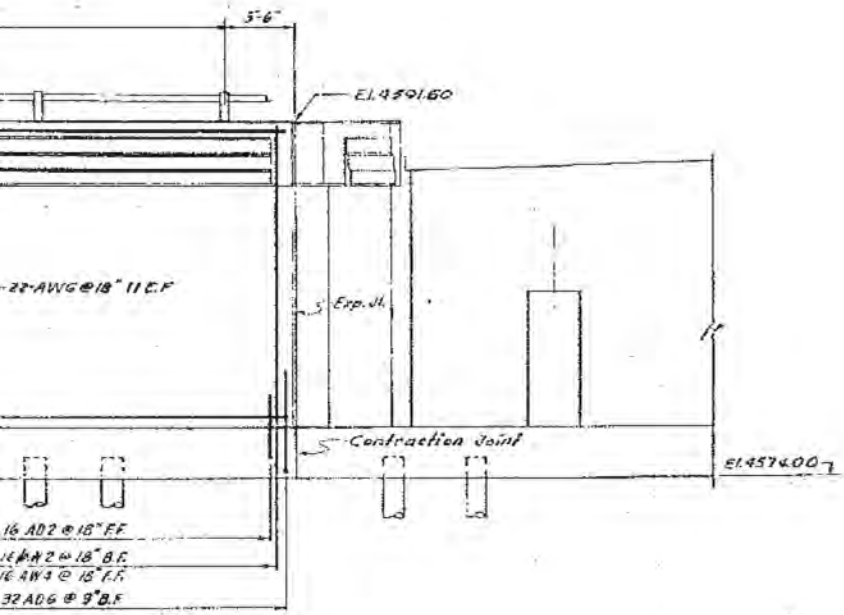


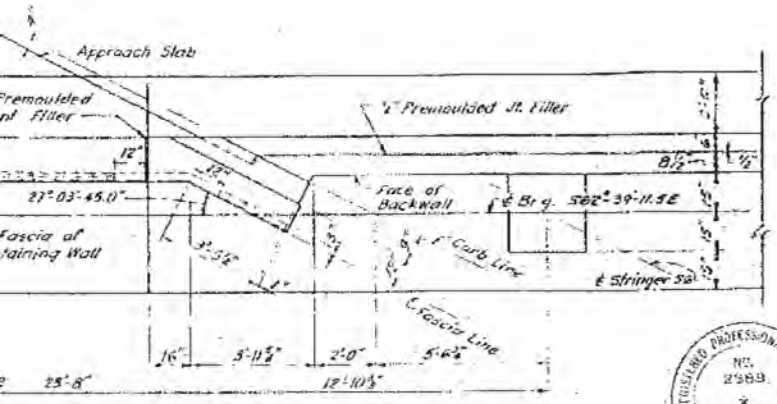


DETAIL B
SCALE: ⅛"=1'-0"

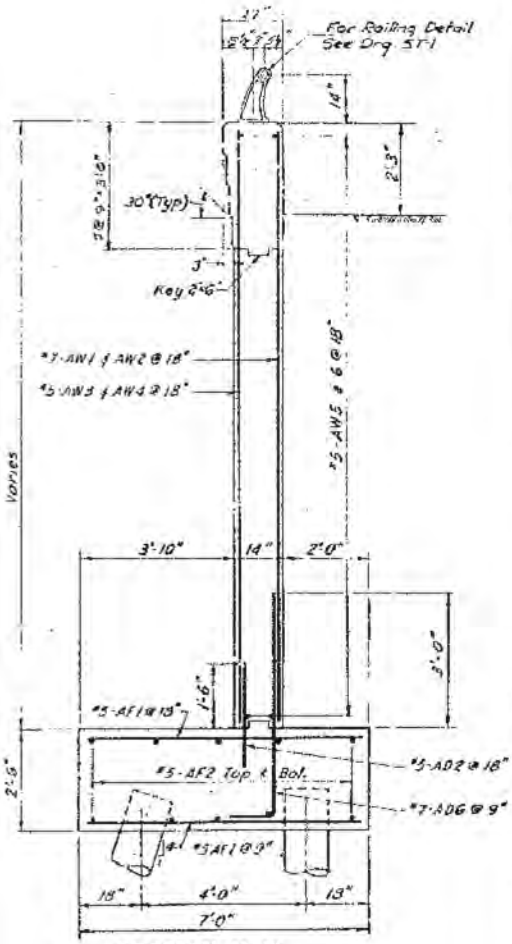


SECTION H-H
SCALE: ½"=1'-0"

NOTES:
FOR FOOTING & PILE LOCATIONS SEE SHEET 7
FOR EXPANSION & CONTRACTION JOINT DETAILS SEE SHEET 15
REINFORCING TO BE PLACED TO AVOID PILES.

RETAINING WALL
ABUTMENT NO.1 & NO.3

IG-15-6(20)277 2nd Contr.
I 15-6(19) 276 3rd Contr.

DESIGN AND DRAWING BY
WESTERN ENGINEERS, INC. AND
EDWARDS AND KELCEY
CONSULTING ENGINEERS

SUBMITTED BY H. Jack Lemon
CHIEF ENGINEER
UTAH ENGR. LIC. NO. 2258

REGISTERED PROFESSIONAL ENGINEER
NO. 2588
STATE OF UTAH

SHEET 10 OF 31 SHEETS

UTAH STATE ROAD COMMISSION
SALT LAKE CITY, UTAH
BRIDGE DEPARTMENT

EAST LEHI U.P. & U.S.91
OVERPASS
445'-3" O. TO O. HOR. CURVE
STA. 143+89.44
LEHI PROVO UTAH COUNTY

DESIGNED BY F.T.C.
DRAWN BY E.G.C.
TRACED BY
CHECKED BY J.L.B.
APPROVED BY
CHIEF BRIDGE ENGINEER
SCALE
DATE
B. NO.
DWG. NO. C-343

STRUCTURE 1-C

**NFORMATION ONLY**

**FOR INFORMATION ON**

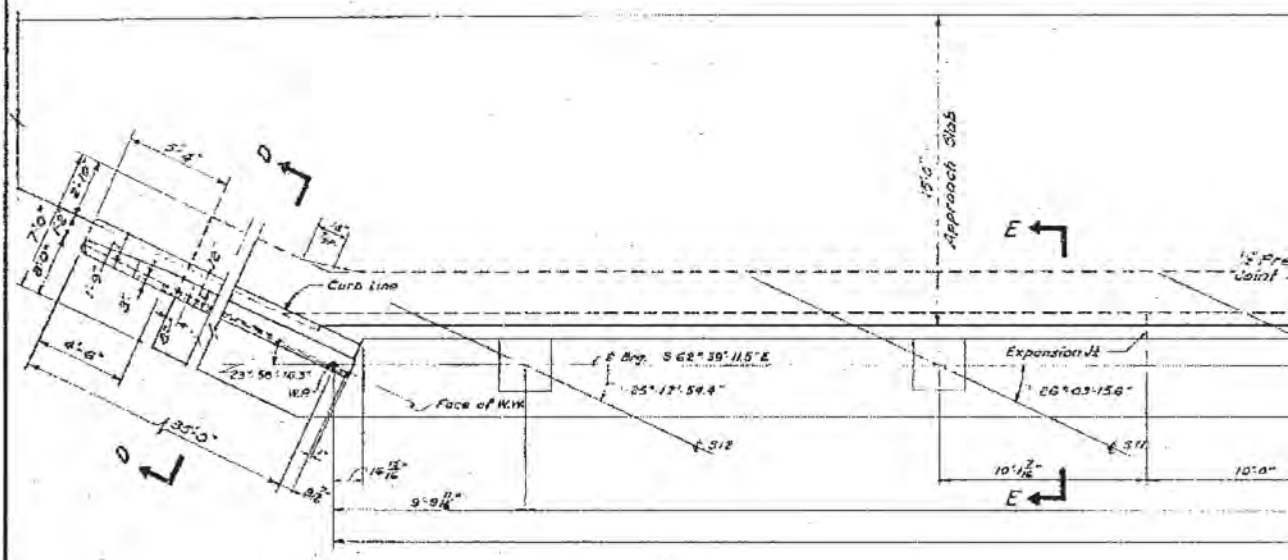


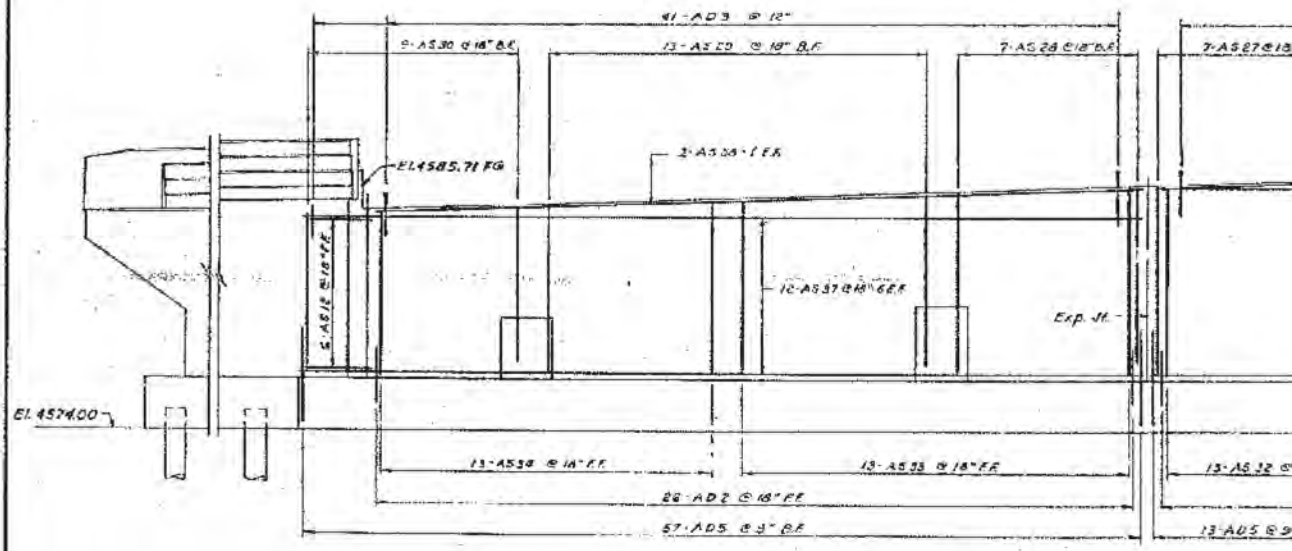


NOTES:
FOR FOOTING LOCATION PLAN & PILE LOCATIONS SEE SHEET 7
FOR ELEVATION OF WINGWALL & FOOTING REINFORCING SEE SHEET 16
FOR SECTIONS NOT SHOWN, ANCHOR BOLT LOCATIONS & EXPANSION & CONTRACTION JOINT DETAILS SEE SHEET 15
REINFORCING TO BE PLACED TO AVOID PILES.

DGN Files IPL PWBridge\16721\4433_C-043-11-Foundation
02-MAY-2005

LY

| FED. ROAD DIST. NO. | STATE | FED. AID PROJ. NO. | FISCAL YEAR | SHEET NO. | TOTAL SHEETS |
|---|---|---|---|---|---|
| 11T | UTAH | | | | |

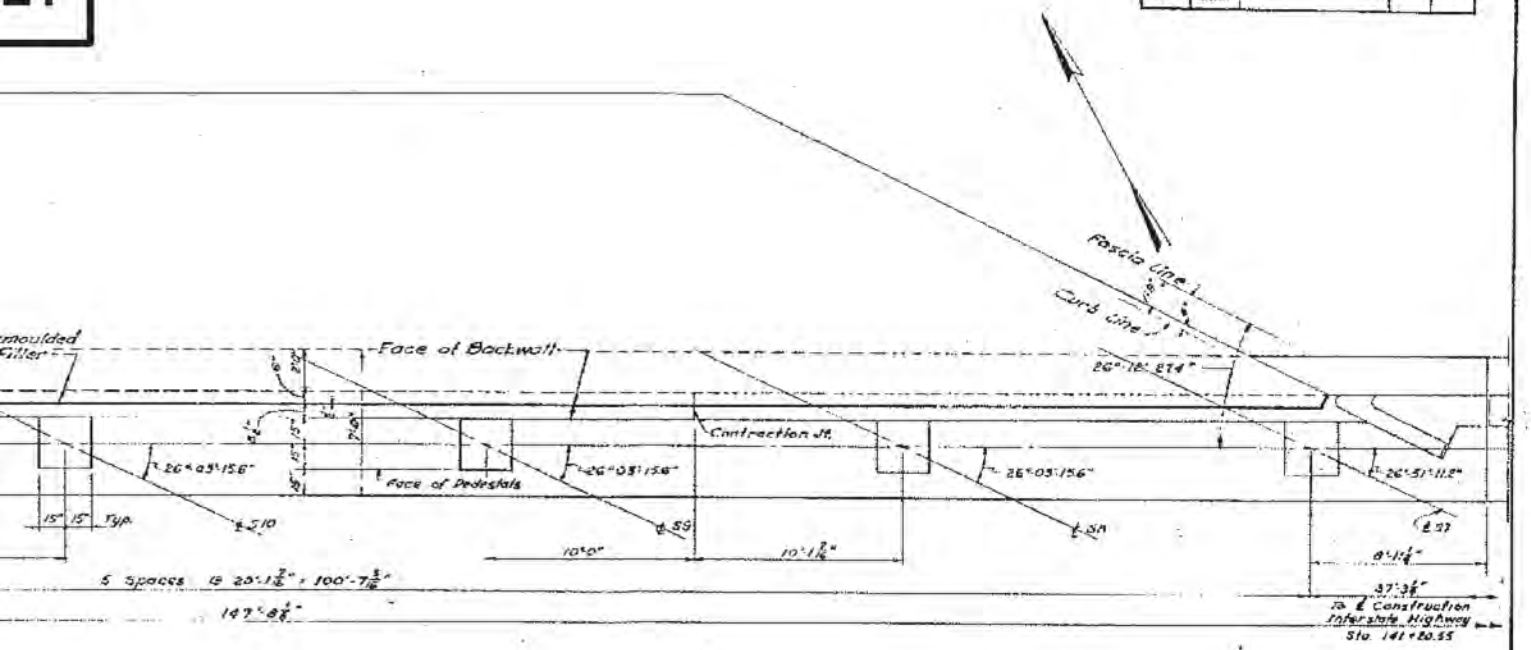


PLAN
SCALE: 1/4"=1'-0"

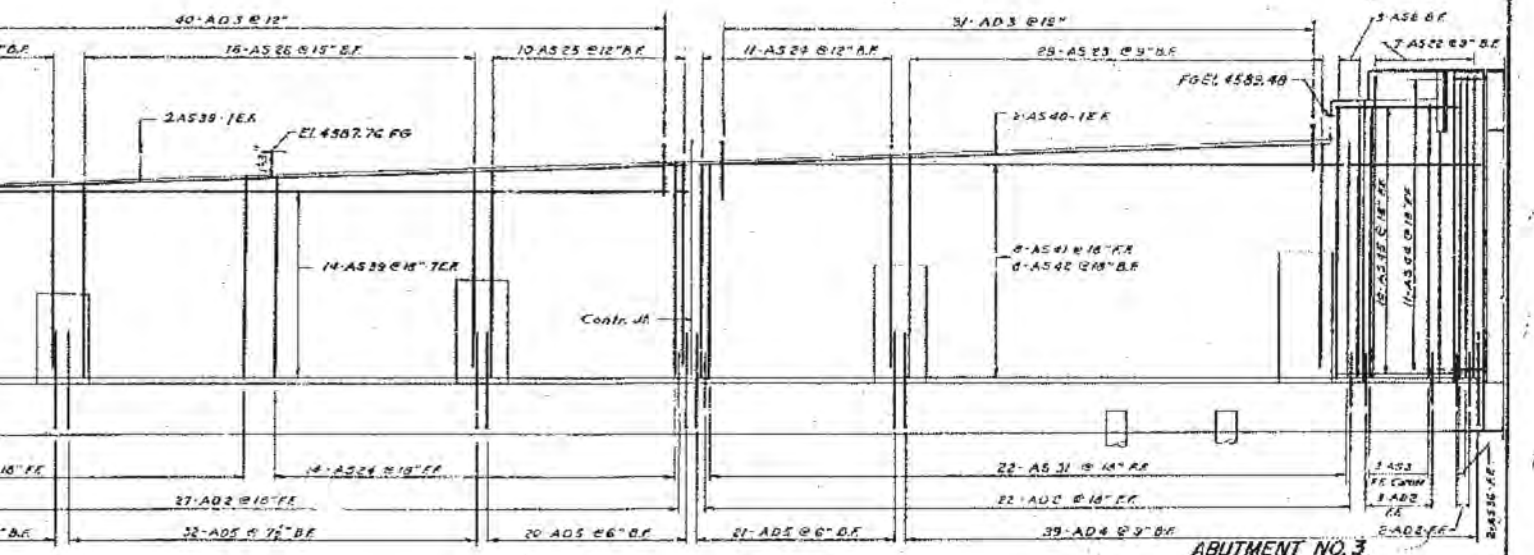


ELEVATION
SCALE: 1/4"=1'-0"

ABUTMENT NO. 3

SHEET 11 OF 31 SHEETS

IG-15-6(20) 277 2nd Contr.
I-15-6(19) 276 3rd Contr.

| STR. No. | BEAM SEAT ELEVATIONS |
|---|---|
| 7 | 4582.47 |
| 8 | 4582.30 |
| 9 | 4581.65 |
| 10 | 4580.98 |
| 11 | 4580.31 |
| 12 | 4579.60 |

DESIGN AND DRAWING BY
WESTERN ENGINEERS, INC. AND
EDWARDS AND KELCEY
CONSULTING ENGINEERS

SUBMITTED BY H. Jackson Lowe CHIEF ENGINEER
UTAH ENGR. LIC. NO. 2-308

UTAH STATE ROAD COMMISSION
SALT LAKE CITY, UTAH
BRIDGE DEPARTMENT

EAST LEHI U.P. & U.S. 91 OVERPASS
445'-3" O. TO O. HOR. CURVE
STA. 143+89.44
LEHI PROVO UTAH COUNTY

DESIGNED BY K.Y. SCALE AS NOTED
DRAWN BY E.O.G. ISSUED June 11, 1963
TRACED BY APPROVED
CHECKED BY CHIEF BRIDGE ENGINEER
BR. NO. C-343

STRUCTURE I-E

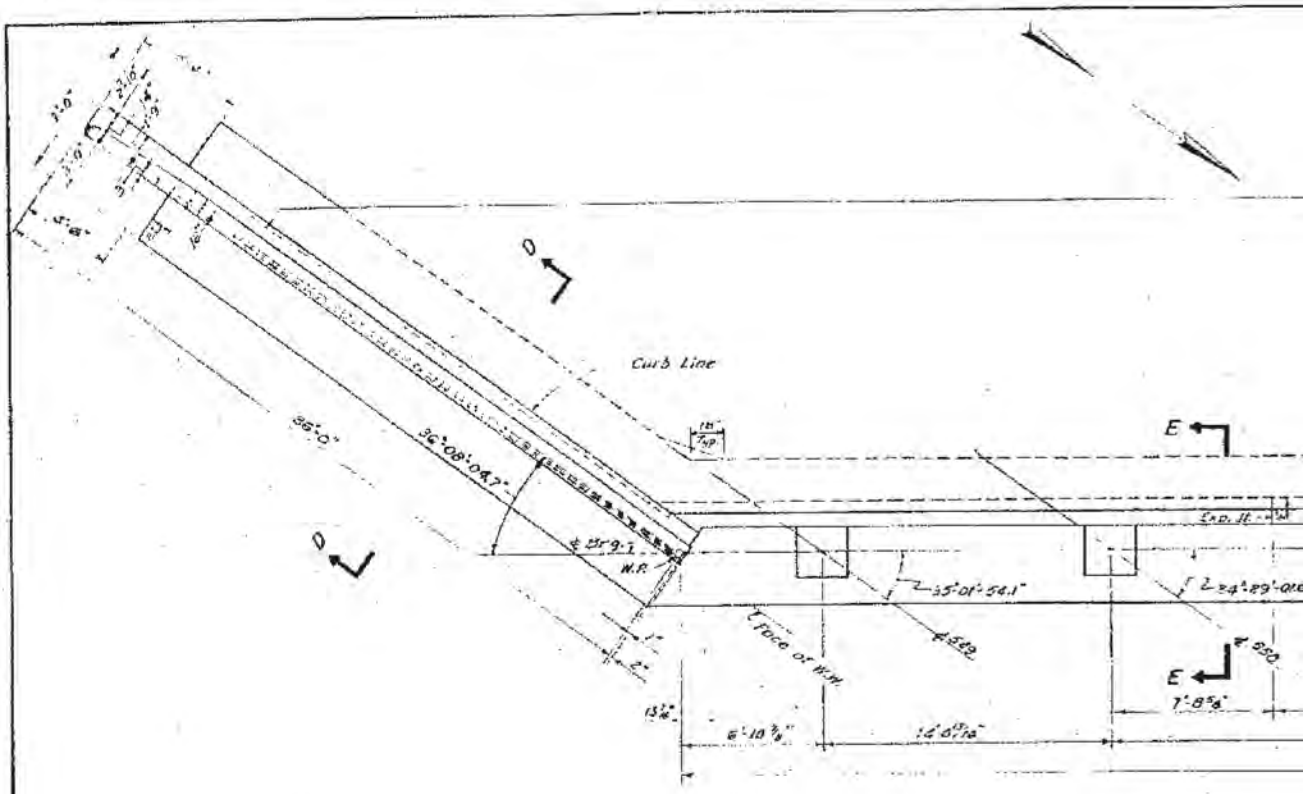


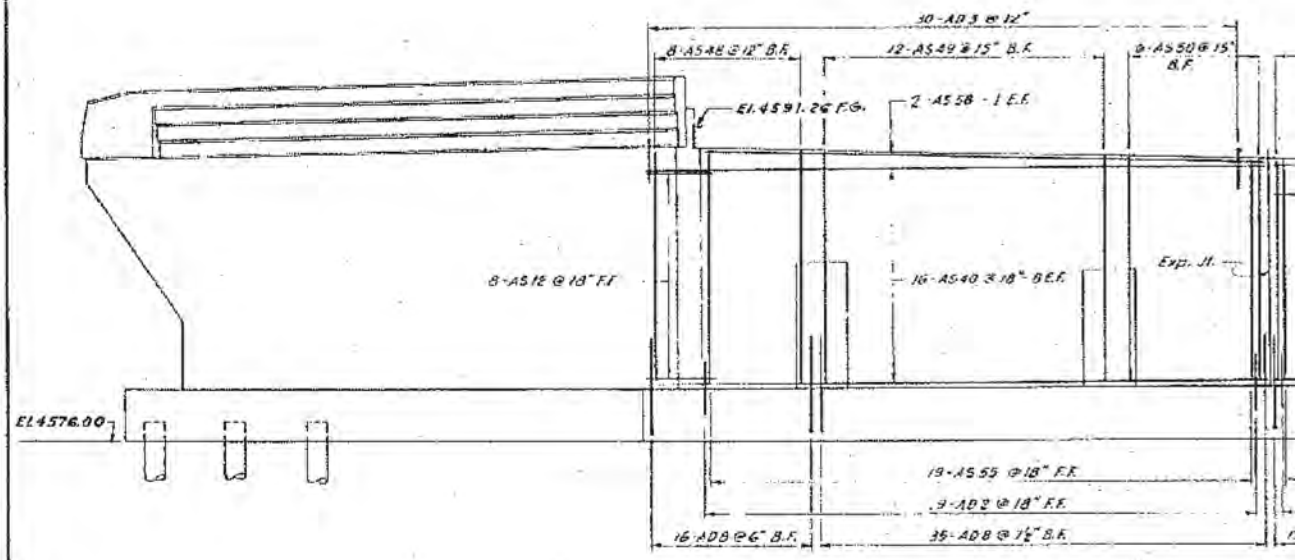


NOTES:
FOR FOOTING LOCATION PLAN & PILE LOCATIONS SEE SHEET No 7.
FOR ELEVATION OF WINGWALL & FOOTIN REINFORCING SEE SHEET No 16.
FOR SECTIONS NOT SHOWN, ANCHOR BO LOCATIONS, & EXPANSION & CONTRACTION JOINT DETAILS SEE SHEET No 15.
REINFORCING TO BE PLACED TO AVOID

**FOR INFORMATION ONLY**

DGN Files IPL PWBridge\16721\4433-C-043-12-Foundation
02-MAY-2005

| FED. ROAD DIV. NO. | STATE | FED. AID PROJ. NO. | FISCAL YEAR | SHEET NO. | TOTAL SHEETS |
|---|---|---|---|---|---|
| U" | UTAH | | | | |

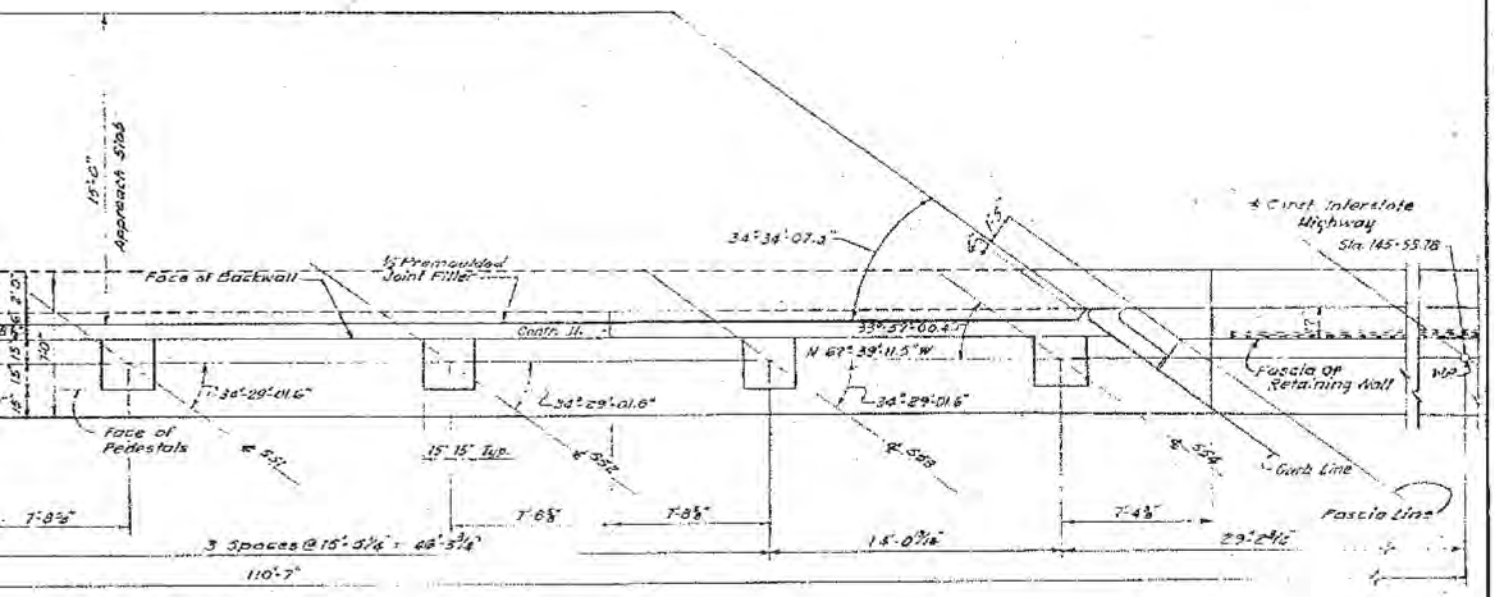


**PLAN**
SCALE: 1/4" = 1'-0"

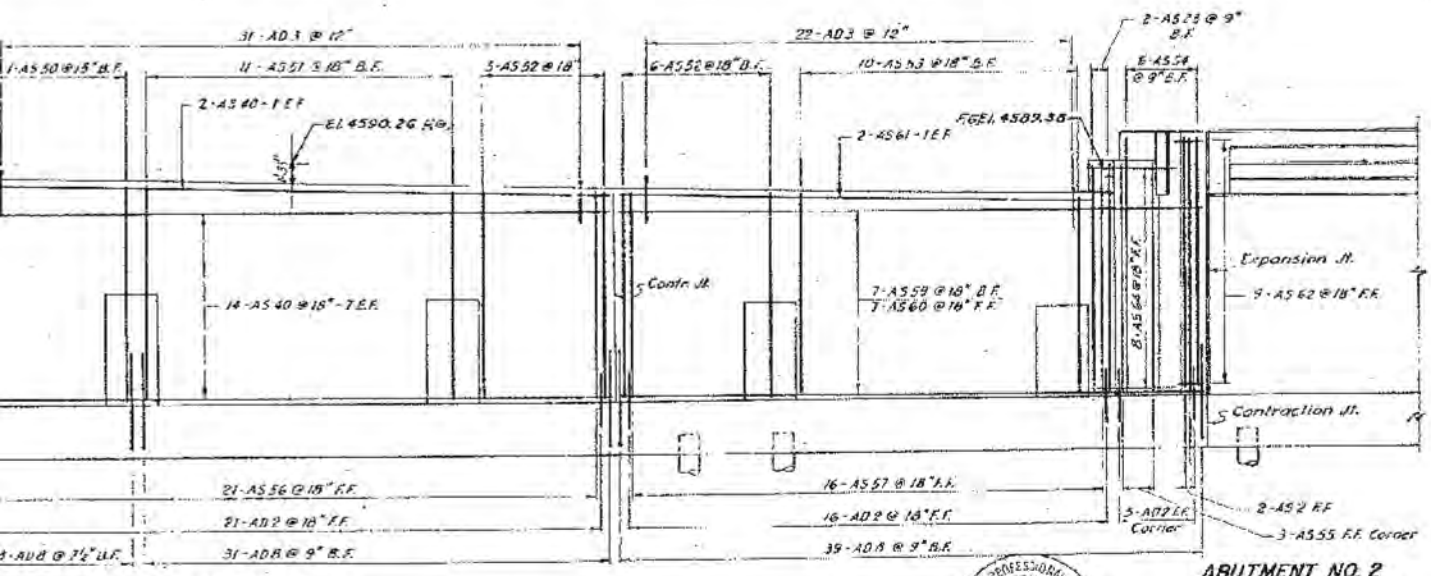


**ELEVATION**
SCALE: 1/4" = 1'-0"

**ABUTMENT NO. 2**

SHEET 12 OF 31 SHEETS

[G-15-6 (20) 277 2nd Contr.
[-15-6 (19) 276 3rd Contr.

| STR. No. | BEAM SEAT ELEVATIONS |
|---|---|
| 49 | 4584.81 |
| 50 | 4584.49 |
| 51 | 4584.16 |
| 52 | 4583.81 |
| 53 | 4583.41 |
| 54 | 4583.16 |

REGISTERED PROFESSIONAL ENGINEER NO. 2988 H. JACK EDWARDS STATE OF UTAH

DESIGN AND DRAWING BY
WESTERN ENGINEERS, INC. AND
EDWARDS AND KELCEY
CONSULTING ENGINEERS

SUBMITTED BY: CHIEF ENGINEER
UTAH ENGR. LIC. NO. 2988

UTAH STATE ROAD COMMISSION
SALT LAKE CITY, UTAH
BRIDGE DEPARTMENT

EAST LEHI U.P. & U.S. 91 OVERPASS
445'-3" O. TO O. HOR. CURVE
STA. 145+89.44
LEHI - PROVO UTAH COUNTY

DESIGNED BY K.Y. SCALE AS NOTED
DRAWN BY C.B.C. ISSUED
TRACED BY REVISED
CHECKED BY Y.G. APPROVED

No. DWG. No. C-343

STRUCTURE 1-1

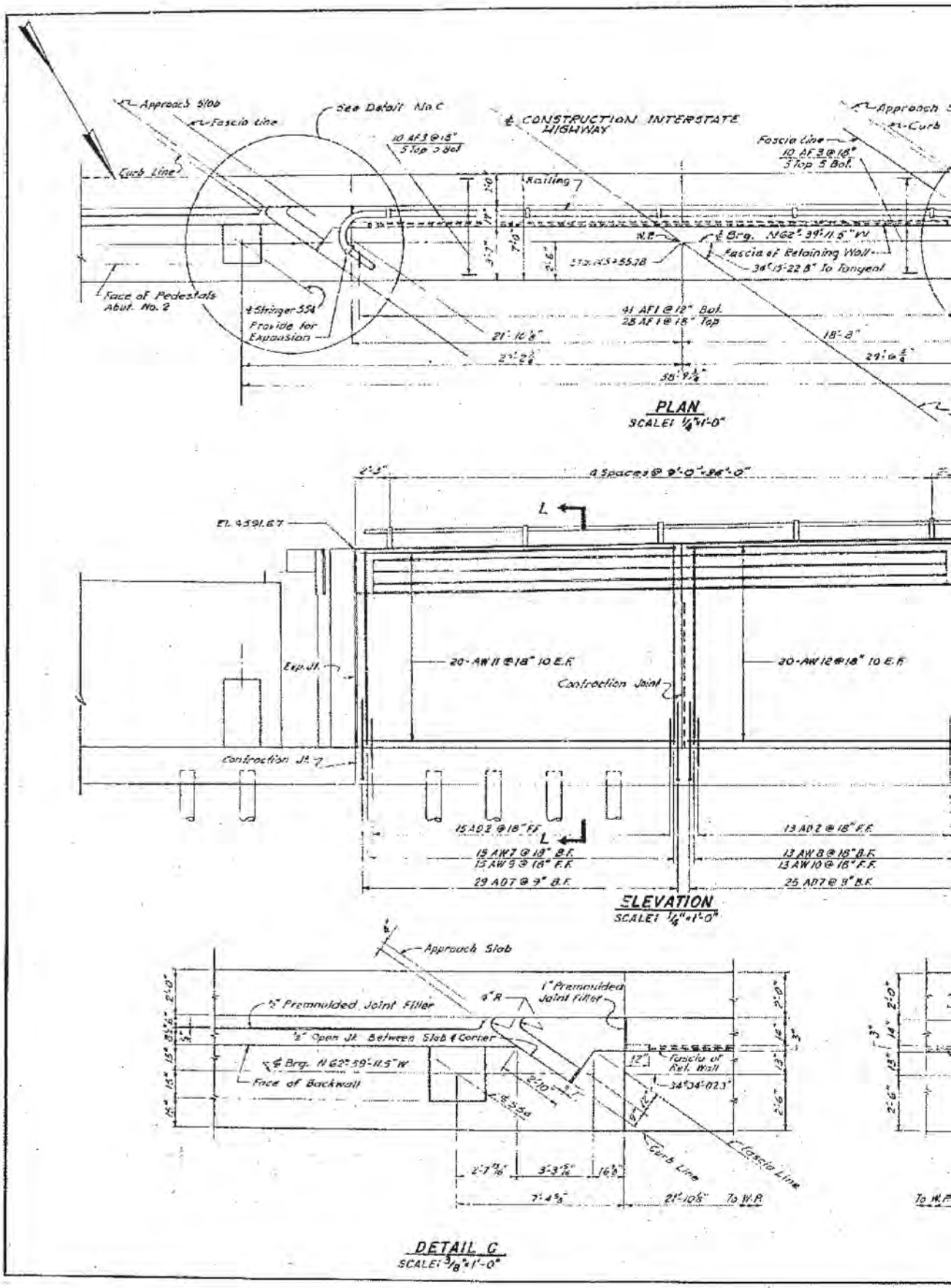


DGN Files IP.PWpdns\16721\4433.C-043-13.Form\Fouldin
02-MAY-2005

**FOR INFORMATION ONLY**

| FED ROAD DIST. NO. | STATE | FED. AID PROJ. NO. | FISCAL YEAR | SHEET NO. | TOTAL SHEETS |
|---|---|---|---|---|---|
| 17 | UTAH | | | | |

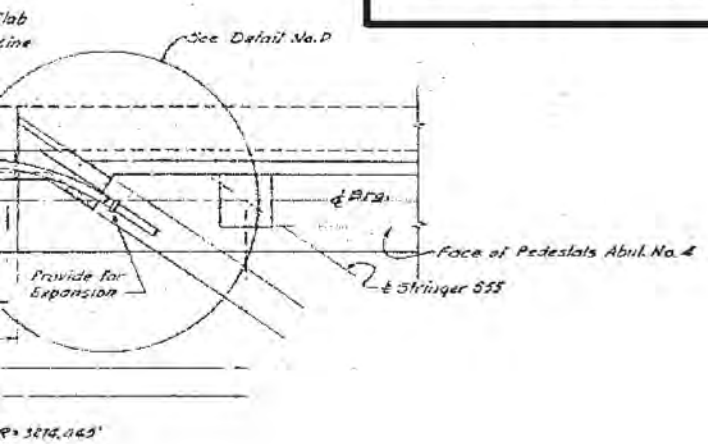


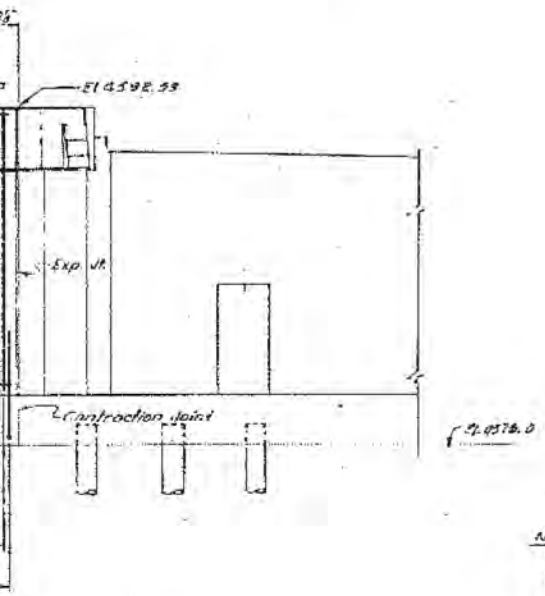


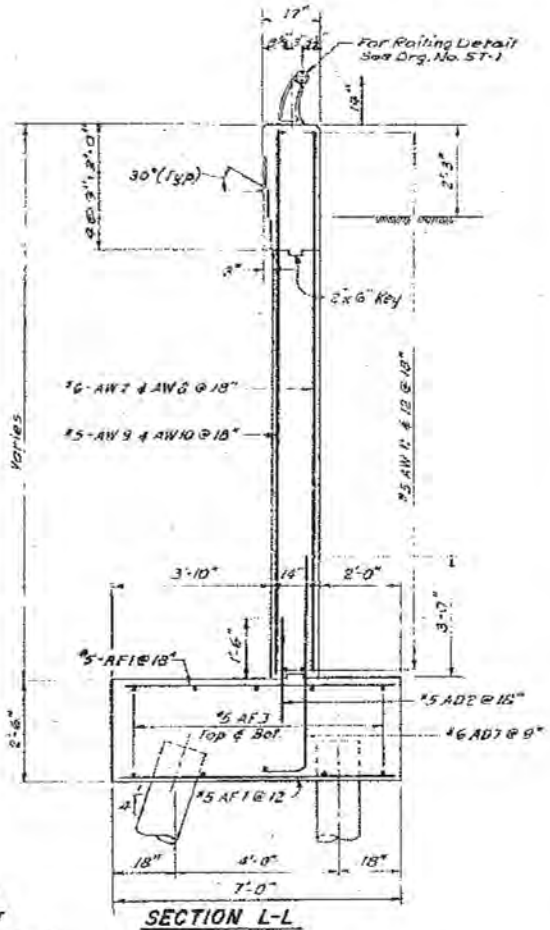


**SECTION L-L**
SCALE: 1/2"=1'-0"

NOTES:
FOR FOOTING LOCATION PLAN & PILE DETAILS SEE SHEET 7
FOR EXPANSION & CONTRACTION JOINT DETAILS SEE SHEET 15
REINFORCING TO BE PLACED TO AVOID PILES.

1 3Em Shafts Batter Corrected to 1:4

**RETAINING WALL ABUTMENT NO. 2 & NO. 4**

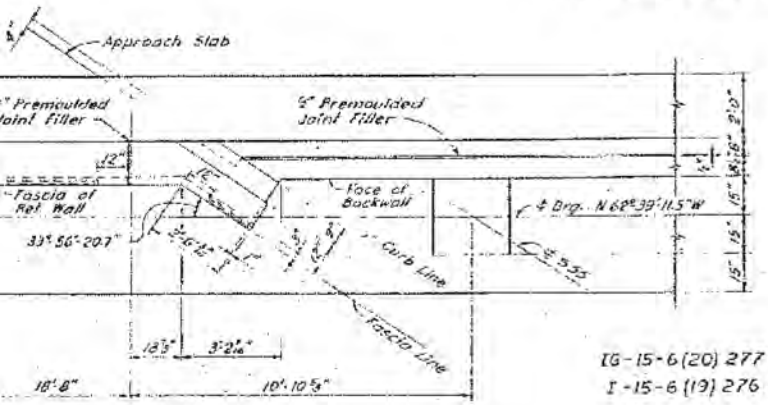


**DETAIL D**
SCALE: 3/8"=1'-0"

IG-15-6(20) 277 2nd Contr.
I-15-6(19) 276 3rd Contr.

DESIGN AND DRAWING BY
WESTERN ENGINEERS, INC. AND
EDWARDS AND KELCEY
CONSULTING ENGINEERS

SUBMITTED BY [signature] CHIEF ENGINEER
UTAH ENGR. LIC. NO. 2383

SHEET 13 OF 31 SHEETS

UTAH STATE ROAD COMMISSION
SALT LAKE CITY, UTAH
BRIDGE DEPARTMENT

EAST LEHI U.P. & U.S. 91 OVERPASS
445'-3" O. TO O. HOR. CURVE
STA. 143+85.44
LEHI PROVO UTAH COUNTY

DESIGNED BY P.C. SCALE AS NOTED
DRAWN BY F.G.C. DATE JULY 11, 1963
TRACED BY
APPROVED BY D. L. Sanger
CHECKED BY Y.G. 6/63 CHIEF BRIDGE ENGINEER

DR. NO.
DWG. NO. C-343

STRUCTURE 1-2

FO

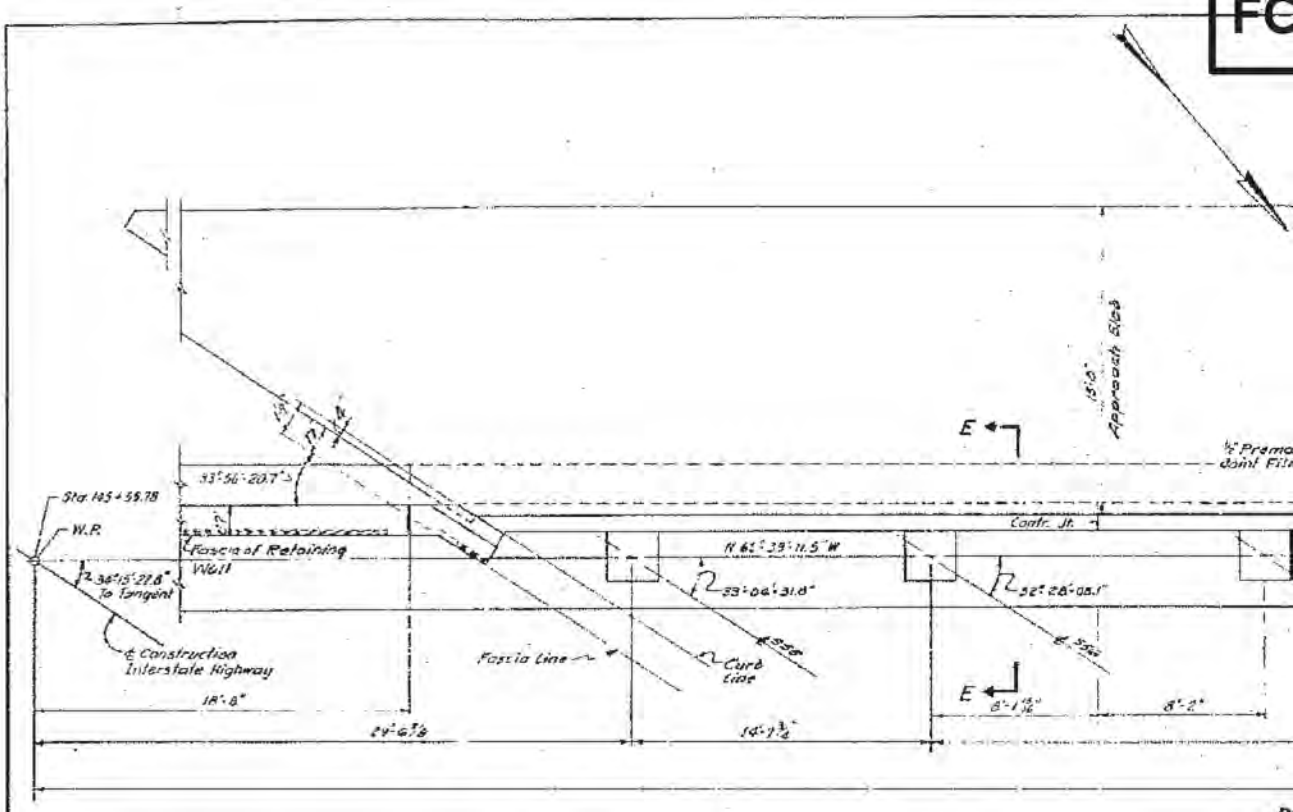


P
SCALE

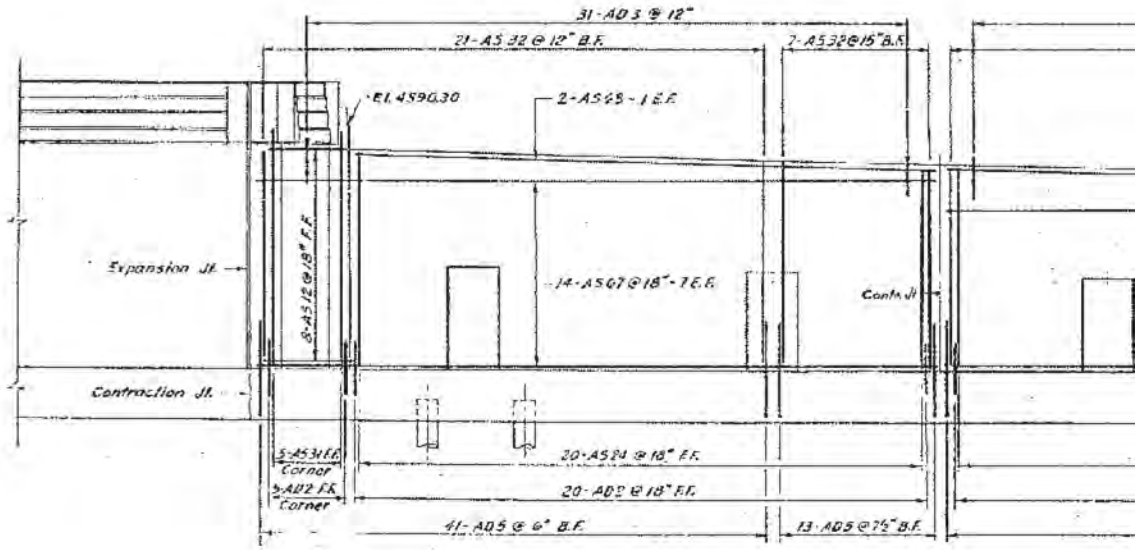


ELE
SCALE

NOTES:
FOR FOOTING LOCATION PLAN & PILE LOCATIONS SEE SHEET 7
FOR ELEVATION OF WINGWALL & FOOTING REINFORCING SEE SHEET 16
FOR SECTIONS NOT SHOWN, ANCHOR BOLT LOCATIONS & EXPANSION & CONTRACTION JOINT DETAILS SEE SHEET 15
REINFORCING TO BE PLACED TO AVOID PILES.

DGN Files 3P1 PWpdms\16721\4433_C-043-14_Footing.dgn
02-MAY-2005

OR INFORMATION ONLY

| FED ROAD DIST. NO. | STATE | FED. AID PROJ. NO. | FISCAL YEAR | SHEET NO. | TOTAL SHEETS |
|---|---|---|---|---|---|
| U-T | UTAH | | | | |

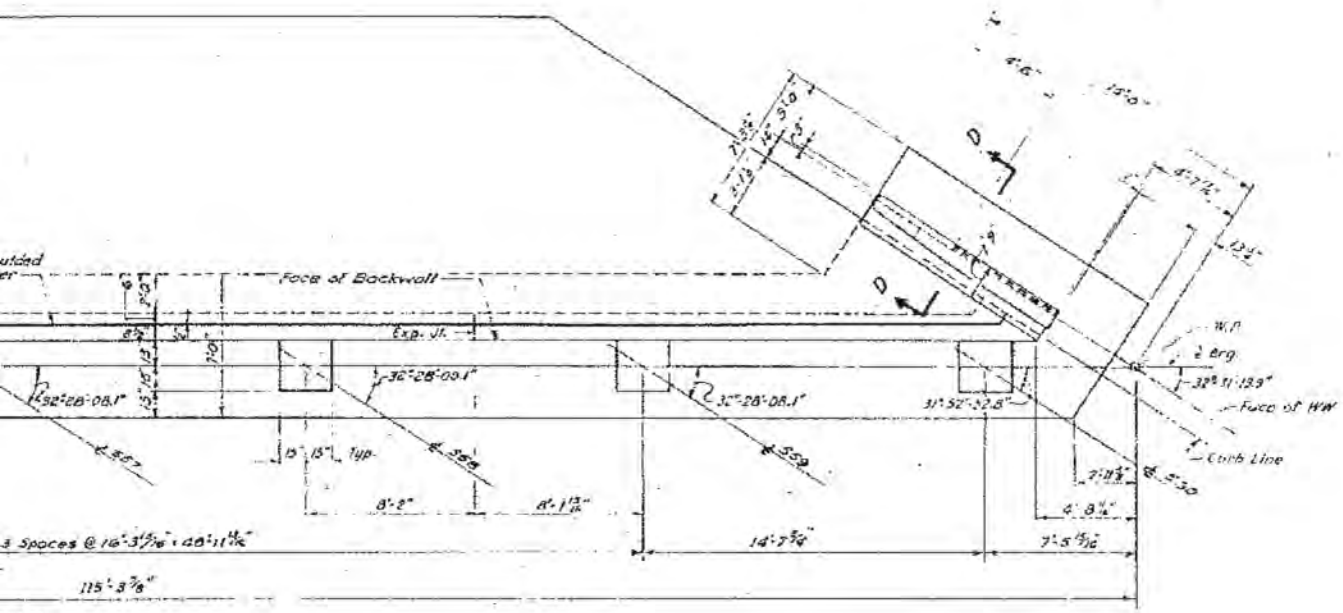


PLAN
Scale: 1/4"=1'-0"

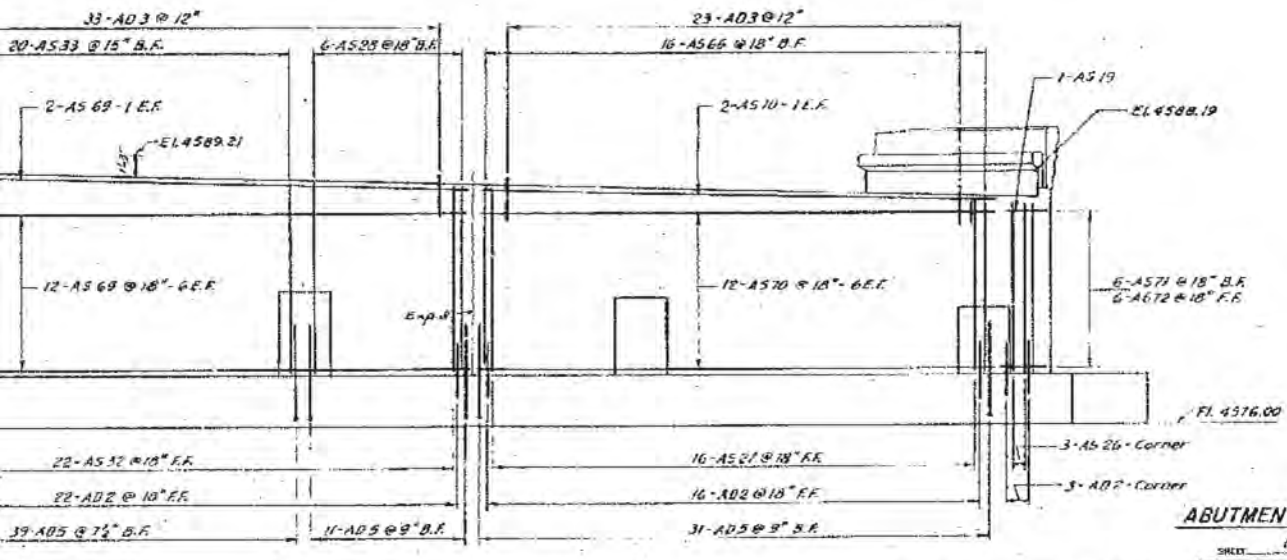


ABUTMENT NO. 4

SHEET 14 OF 31 SHEETS

ELEVATION
Scale: 1/4"=1'-0"

IG-15-6(20)277 2nd Contr.
I-15-6(19)276 3rd Contr.

| STR No. | BEAM SEAT ELEVATION |
|---|---|
| 55 | 4583.87 |
| 56 | 4583.52 |
| 57 | 4583.14 |
| 58 | 4582.75 |
| 59 | 4582.35 |
| 60 | 4581.99 |

REGISTERED PROFESSIONAL ENGINEER No. 2388 STATE OF UTAH

DESIGN AND DRAWING BY
WESTERN ENGINEERS, INC. AND
EDWARDS AND KELCEY
CONSULTING ENGINEERS

SUBMITTED BY [signature] CHIEF ENGINEER
UTAH BRIDGE LIC. NO. 2-188

UTAH STATE ROAD COMMISSION
SALT LAKE CITY, UTAH
BRIDGE DEPARTMENT

EAST LEHI U.P. & U.S. 91 OVERPASS
445'-3" O. TO O. HOR. CURVE
STA. 143+89
LEHI-PROVO. UTAH COUNTY

DESIGNED BY K.Y. SCALE AS NOTED
DRAWN BY E.G.C. ISSUED [illegible]
TRACED BY [illegible] REVISED [illegible]
CHECKED BY Y.G. [illegible]

B.R. No. DWG. No. C-343

STRUCTURE 1-1

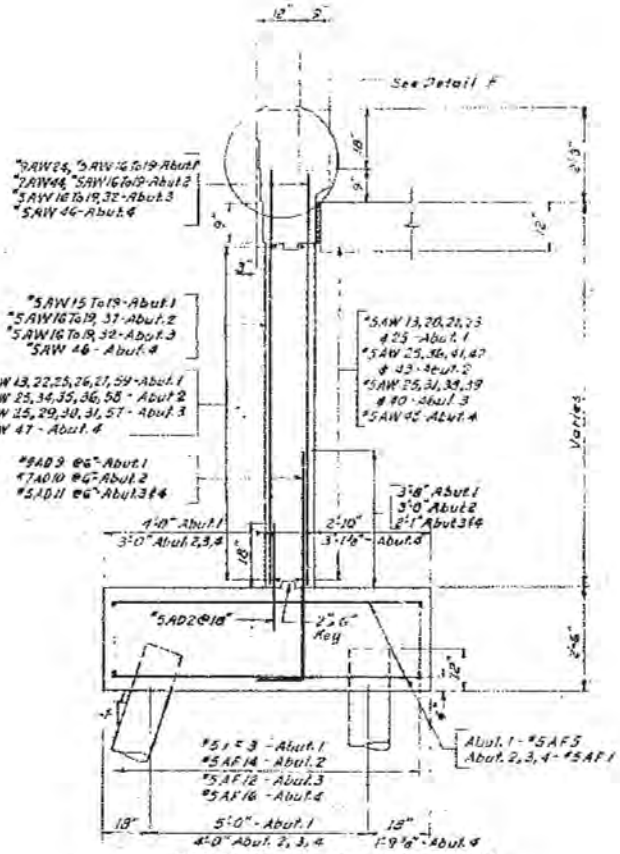


SECTION D-D SEE ABUT. DETAIL
SCALE 1/2"=1'-0"

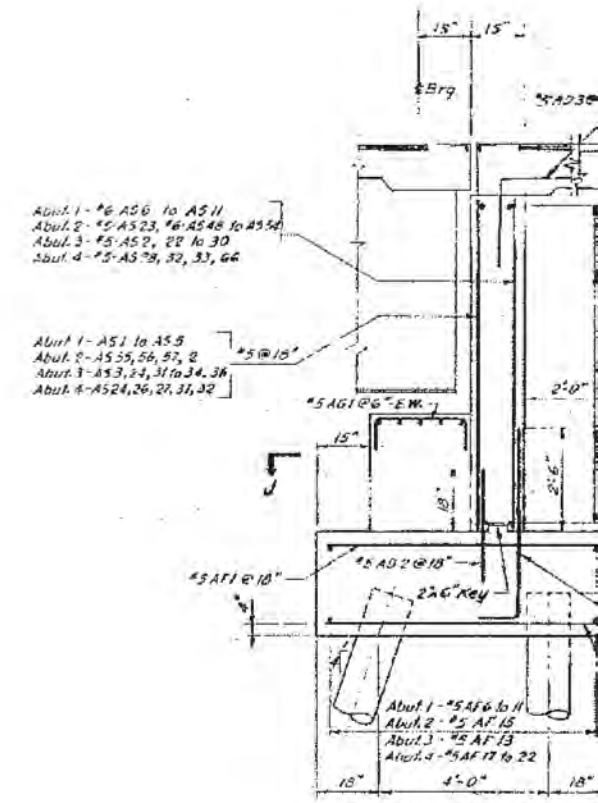


SECTION E-E SEE ABUT
SCALE: 1/2"=1'-0"

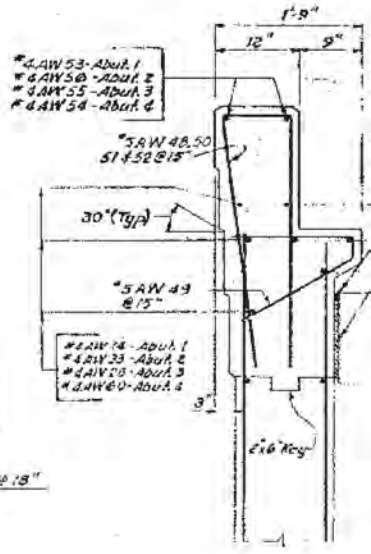


DETAIL F
SCALE: 1"=1'-0"

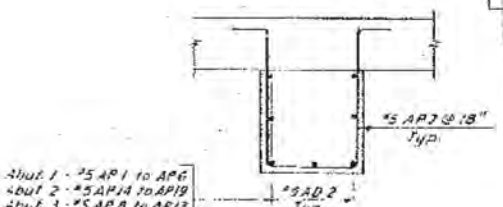

SECTION J-J
SCALE: 1/2"=1'-0"

**FOR INFORMATION ONLY**

[redacted]

| FED. ROAD DIST. NO. | STATE | FED. AID PROJ. NO. | FISCAL YEAR | SHEET NO. | TOTAL SHEETS |
|---|---|---|---|---|---|
| UT | UTAH | | | | |

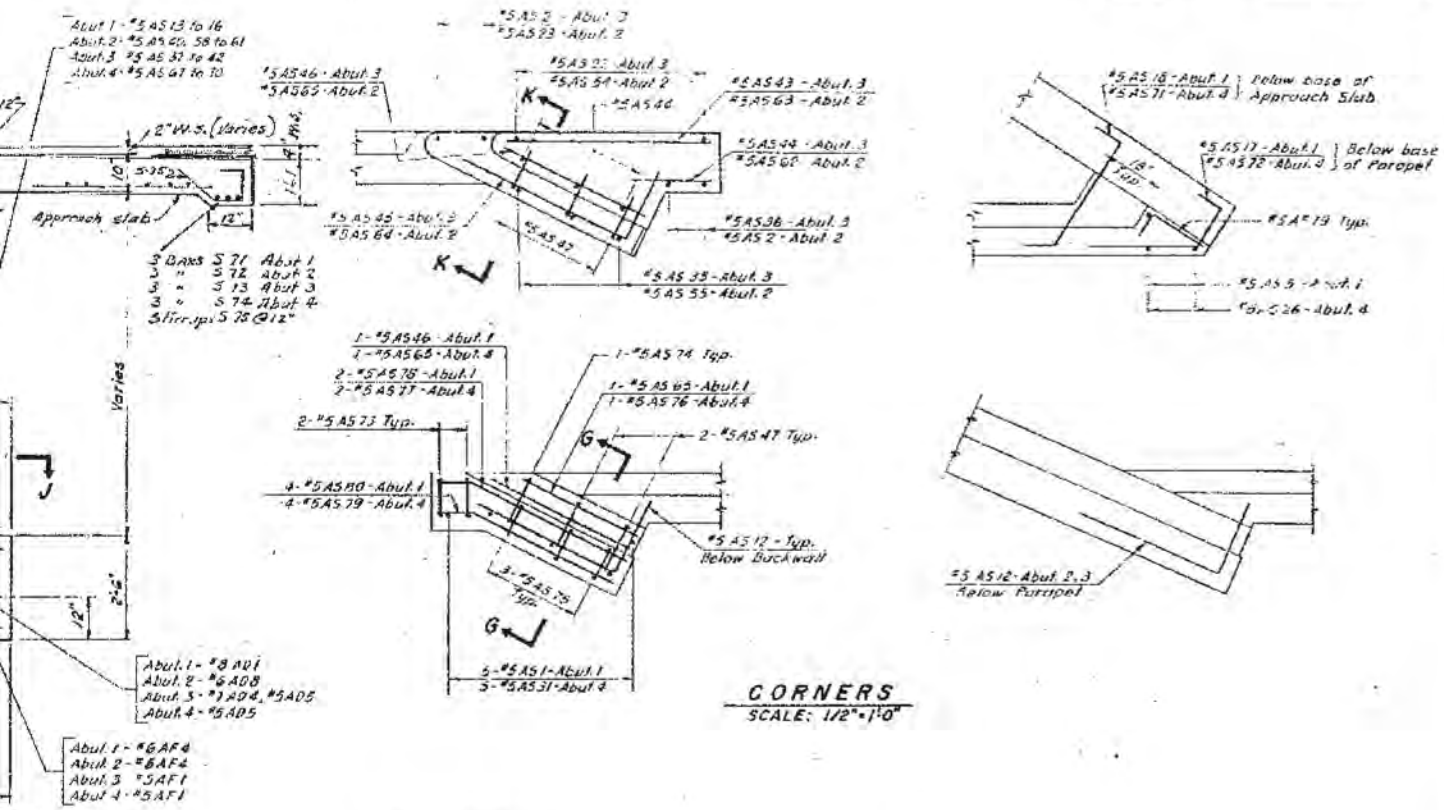


## CORNERS

SCALE: 1/2" = 1'-0"

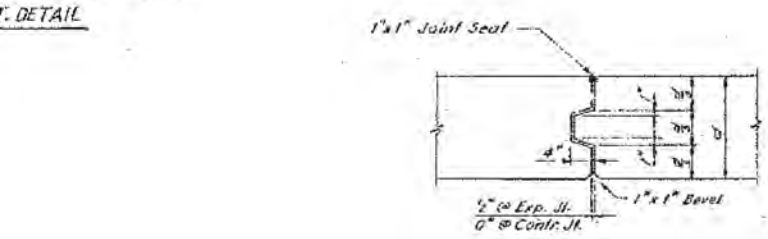


## CONTRACTION & EXPANSION JOINTS

SCALE: 1" = 1'-0"

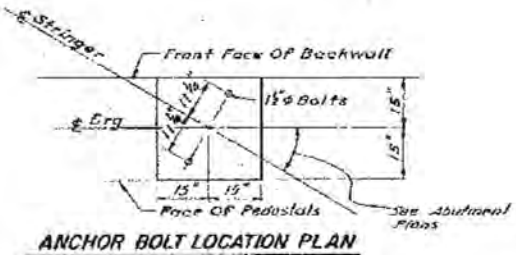


## ANCHOR BOLT LOCATION PLAN

SCALE: 1/2" = 1'-0"

NOTE:

FOR FOOTING LOCATION PLAN & PILE DETAILS SEE SHEET 7

FOR PARAPET & CURB DETAILS SEE DWG. ST.1

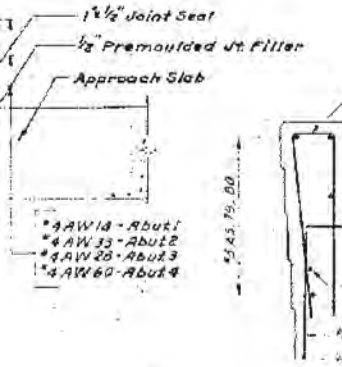


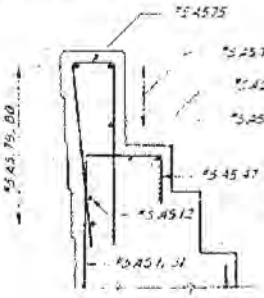


## SECTION G - G

SCALE: 3/4" = 1'-0"

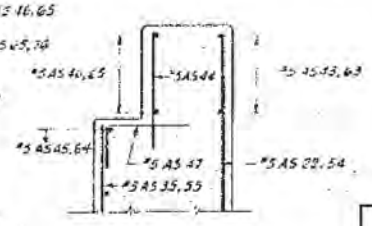


## SECTION K - K

SCALE: 3/4" = 1'-0"

## ABUTMENT DETAILS

I-15-6(20)277 2nd Contr.
I-15-6(19)276 3rd Contr.

SHEET 15 OF 31 SHEETS

REGISTERED PROFESSIONAL ENGINEER NO. 2380 STATE OF UTAH

DESIGN AND DRAWING BY
WESTERN ENGINEERS, INC. AND
EDWARDS AND KELCEY
CONSULTING ENGINEERS

SUBMITTED BY H. Jack Leonard CHIEF ENGINEER
UTAH ENGR. LIC. NO. 2338

UTAH STATE ROAD COMMISSION
SALT LAKE CITY, UTAH
BRIDGE DEPARTMENT

EAST LEHI U.P. & U.S. 91 OVERPASS
445'-3" O.TO O. HOR. CURVE
STA. 143+89.44
LEHI-PROVO UTAH COUNTY

DESIGNED BY K.Y. TIME AS NOTED
CHECKED BY W.E. DATE Jan. 11, 1963
TRACED BY D.L.S. APPROVED B.L.S. Jr.
CHECKED BY Y.G. CHIEF BRIDGE ENGINEER

DWG. NO. C-343

STRUCTURE 1-E

Walks Buffer Corrected to 1'-4

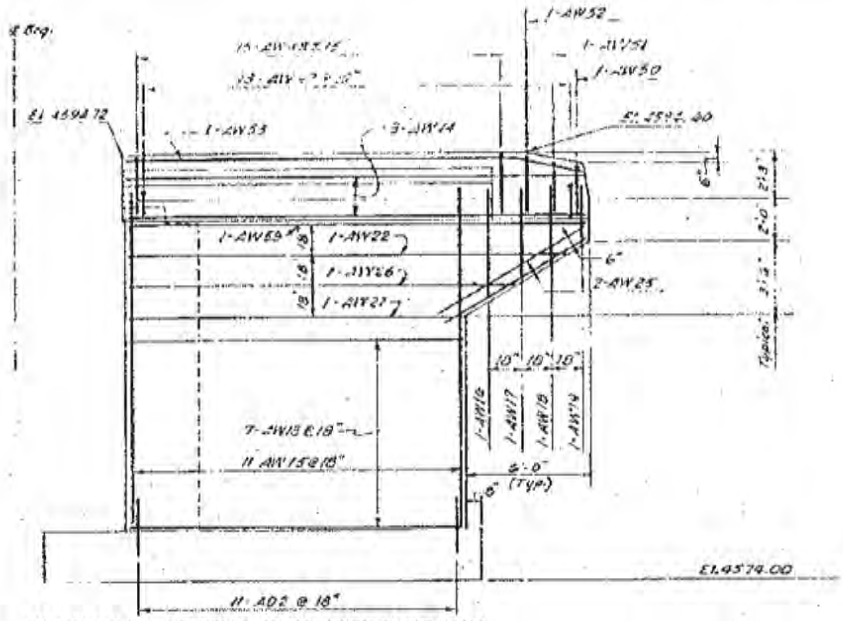


WINGWALL – ABUTMENT NO. 1 (FRONTFACE)

SCALE: 1/4" = 1'-0"

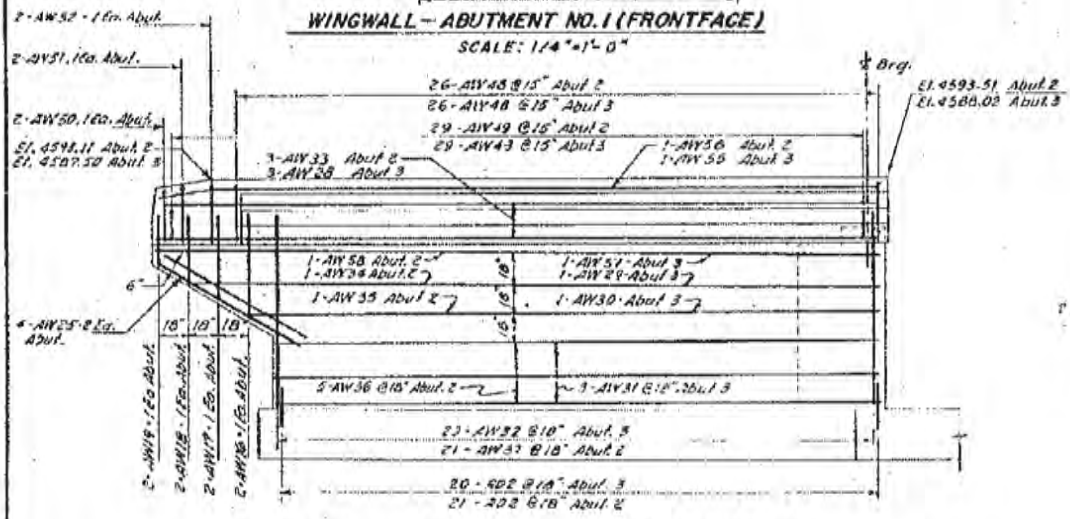


WINGWALL-ABUTMENT NOS. 2 & 3 (FRONTFACE)

SCALE: 1/4" = 1'-0"

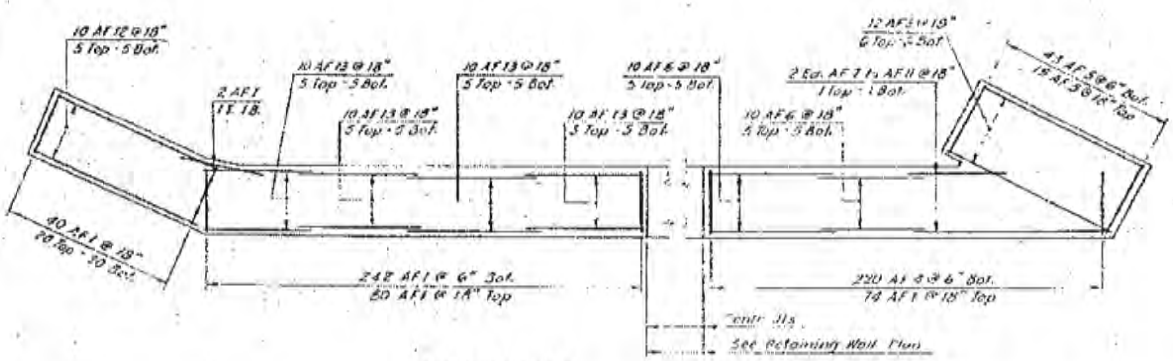


ABUTMENT NO.3 ABUTMENT NO.1

**FOR INFORMATION ONLY**

| FED. ROAD DIST. NO. | STATE | FED. AID PROJ. NO. | FISCAL YEAR | SHEET NO. | TOTAL SHEETS |
|---|---|---|---|---|---|
| UT | UTAH | | | | |

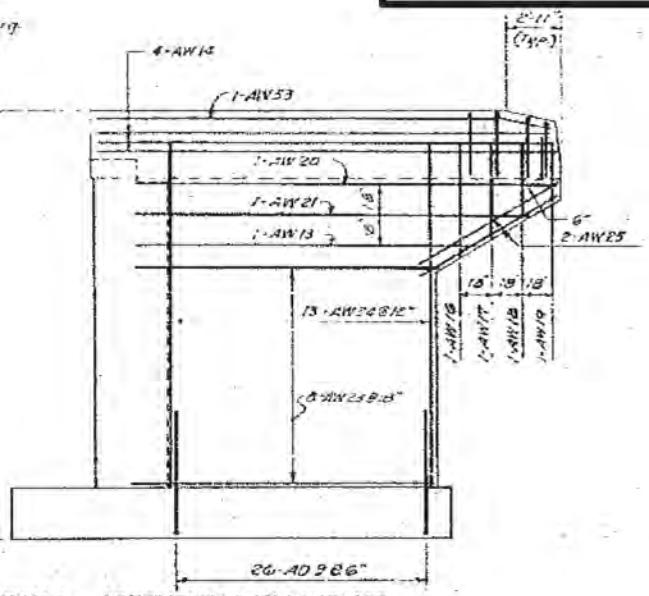


WALL - ABUTMENT NO. 1 (BACKFACE)

SCALE: 1/4"=1'-0"

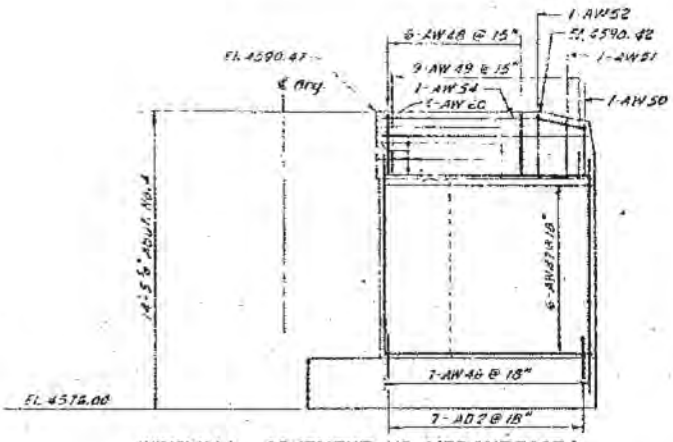


WINGWALL - ABUTMENT NO. 4 (FRONTFACE)

SCALE: 1/4"=1'-0"

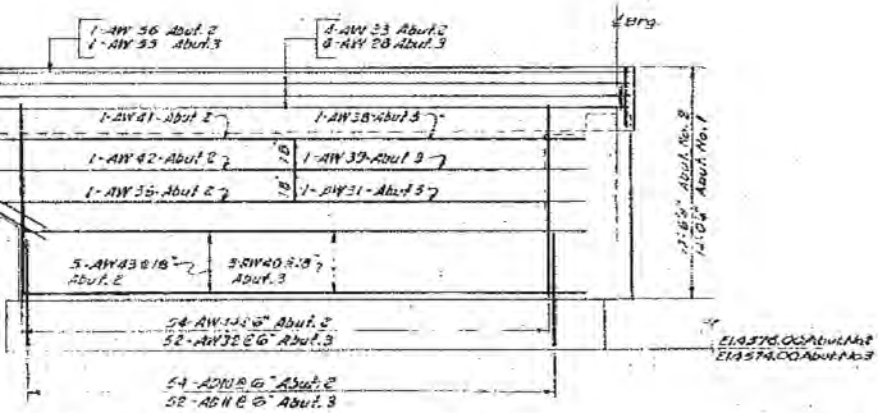


WINGWALL - ABUTMENT NOS. 2 & 3 (BACKFACE)

SCALE: 1/4"=1'-0"

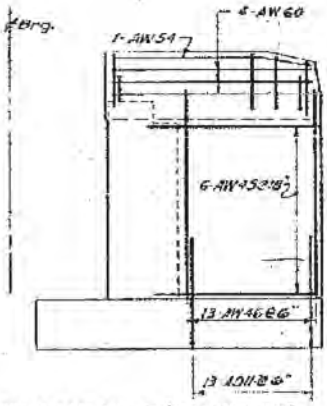


WINGWALL - ABUTMENT NO. 4 (BACKFACE)

SCALE: 1/4"=1'-0"

NOTES:
FOR FOOTING LOCATION PLAN AND PILING SEE SHEET 7 OF 30 SHEETS.
FOR ABUTMENTS SEE SHEETS 9, 11, 12 & 13 OF 30 SHEETS.
FOOTING REINFORCEMENT TO BE PLACED SO AS TO AVOID PILES.

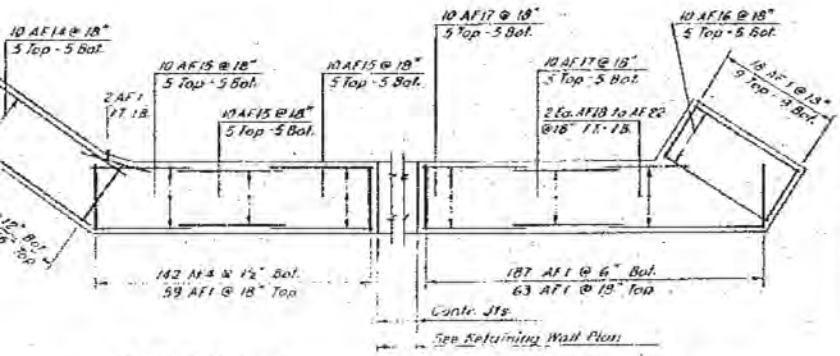


ABUTMENT NO. 2 ABUTMENT NO. 4

REGISTERED PROFESSIONAL ENGINEER No. 2309 H. JACK HOWARD STATE OF UTAH

DESIGN AND DRAWING BY
WESTERN ENGINEERS, INC. AND
EDWARDS AND KELCEY
CONSULTING ENGINEERS

SUBMITTED BY H. Jack Howard CHIEF ENGINEER
UTAH ENGR. LIC. NO. 2309

**WINGWALLS**

IG-15-6(20)277
I-15-6(19)276 3rd. Contr.

SHEET 16 OF 31 SHEETS

UTAH STATE ROAD COMMISSION
SALT LAKE CITY, UTAH
BRIDGE DEPARTMENT

**EAST LEHI U.P. & U.S. 91 OVERPASS**

445'-3" O. TO O. HOR. CURVE
STA. 143+89.44
LEHI-PROVO. UTAH COUNTY

DRAWN BY J.F. SCALE AS NOTED
DATE JUNE 18, 1963
CHECKED BY K.G.
APPROVED BY D.S. Sharp CHIEF BRIDGE ENGINEER

DWG. No. C-343

STRUCTURE 3-3

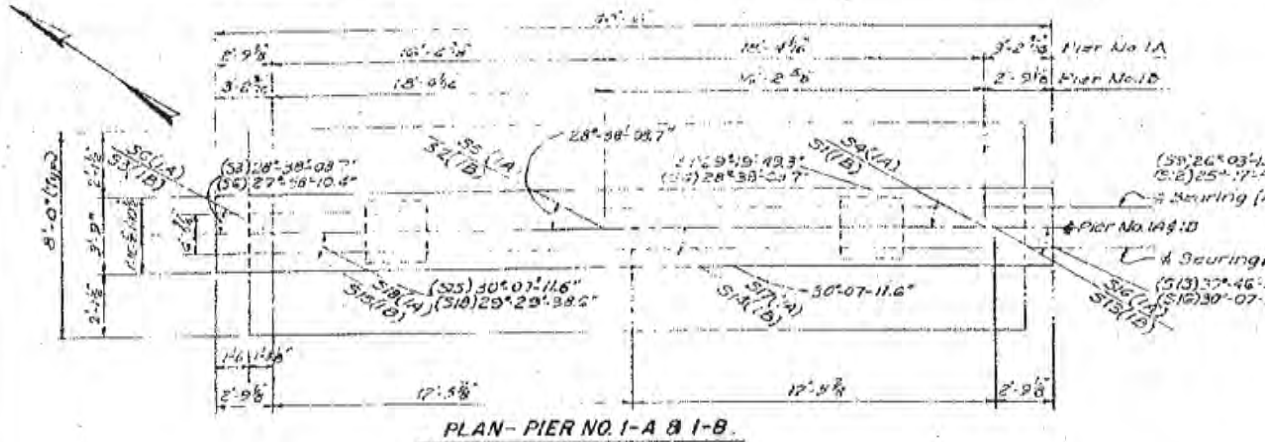


PLAN- PIER NO. 1-A & 1-B.

SCALE: 1/4" = 1'-0"

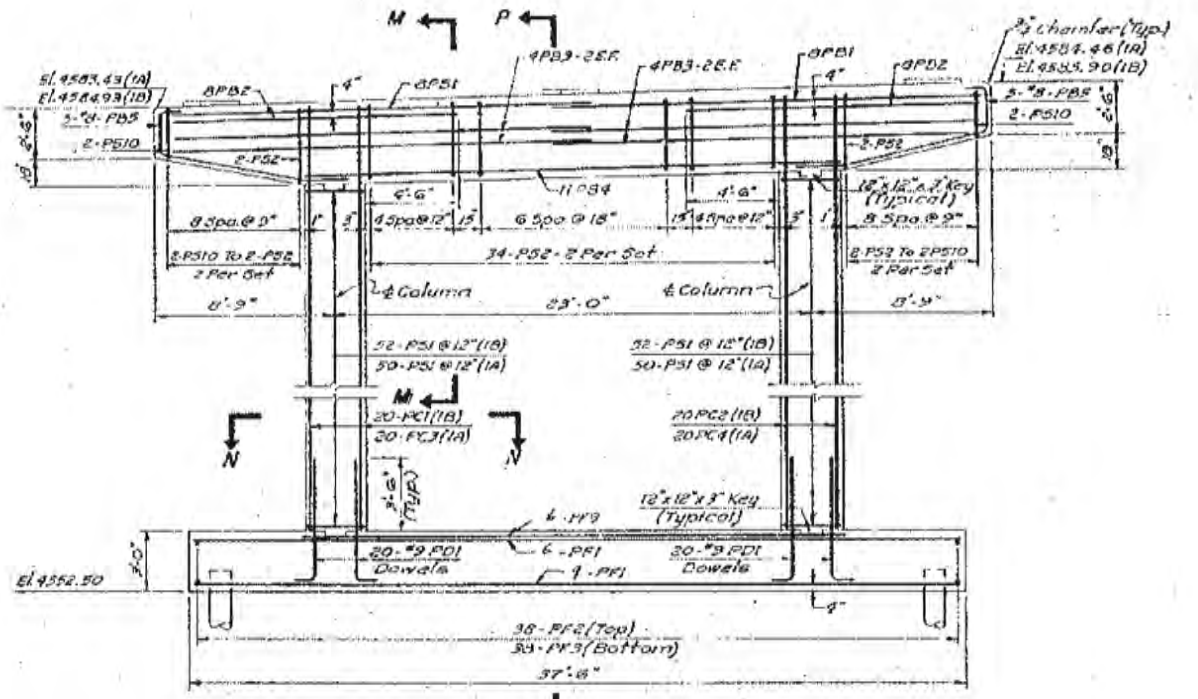


ELEVATION

SCALE: 1/4" = 1'-0"

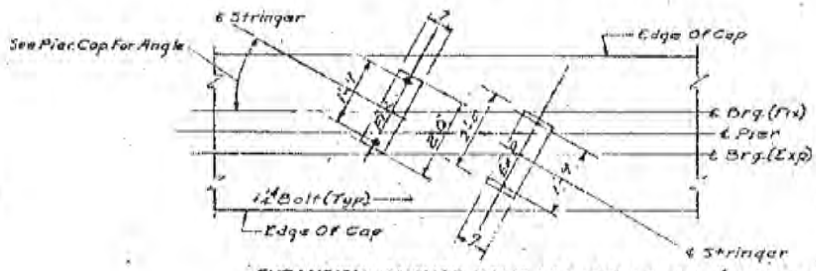


EXPANSION-ANCHOR BOLT LOCATION PLAN (TYPICAL)

SCALE: 1/2" = 1'-0"

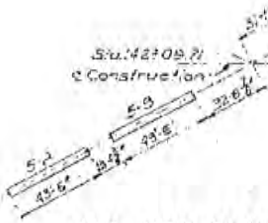


CAP KEY PLAN

SCALE: 1" = 40'-0"

02-MAY-2008 DGN Files: TP PrePlan\15672\4433-C-343-17.dgn\Location

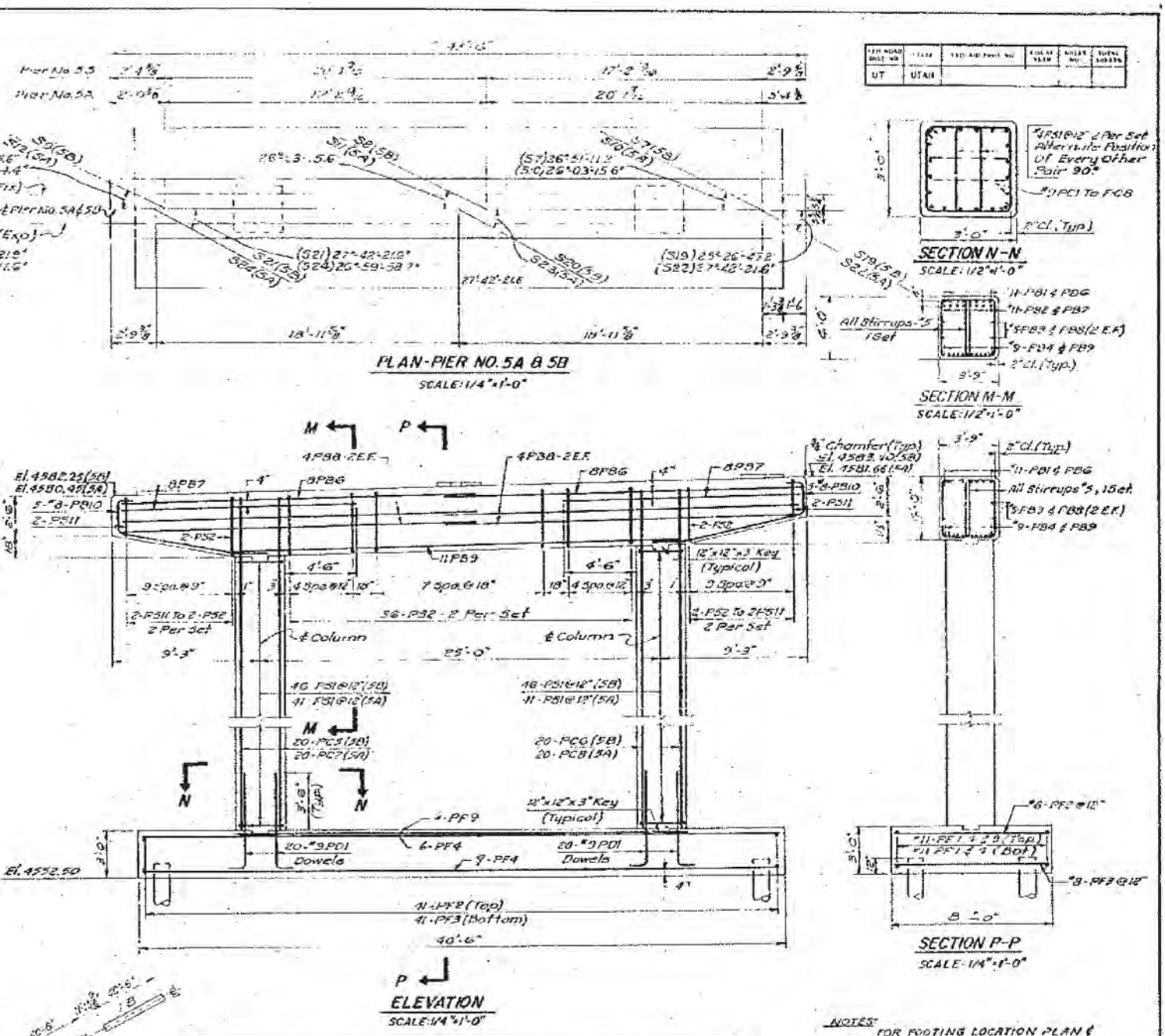


| STR. NO. | ELEVATION PIER NO. 1B | STR. NO. | ELEVATION PIER NO. 1A | STR. NO. | ELEVATION PIER NO. 5B | STR. NO. | ELEVATION PIER NO. 5A |
|---|---|---|---|---|---|---|---|
| 1 | 4586.41 | 4 | 4584.97 | 7 | 4583.91 | 10 | 4582.15 |
| 2 | 4585.98 | 5 | 4584.43 | 8 | 4583.38 | 11 | 4581.50 |
| 3 | 4585.48 | 6 | 4583.94 | 9 | 4582.77 | 12 | 4580.95 |
| 13 | 4586.19 | 16 | 4584.76 | 19 | 4583.67 | 22 | 4581.96 |
| 14 | 4585.73 | 17 | 4584.26 | 20 | 4583.12 | 23 | 4581.36 |
| 15 | 4585.24 | 18 | 4583.73 | 21 | 4582.55 | 24 | 4580.75 |

△ 6-24-63 Elev. 4582.97 To 4581.50

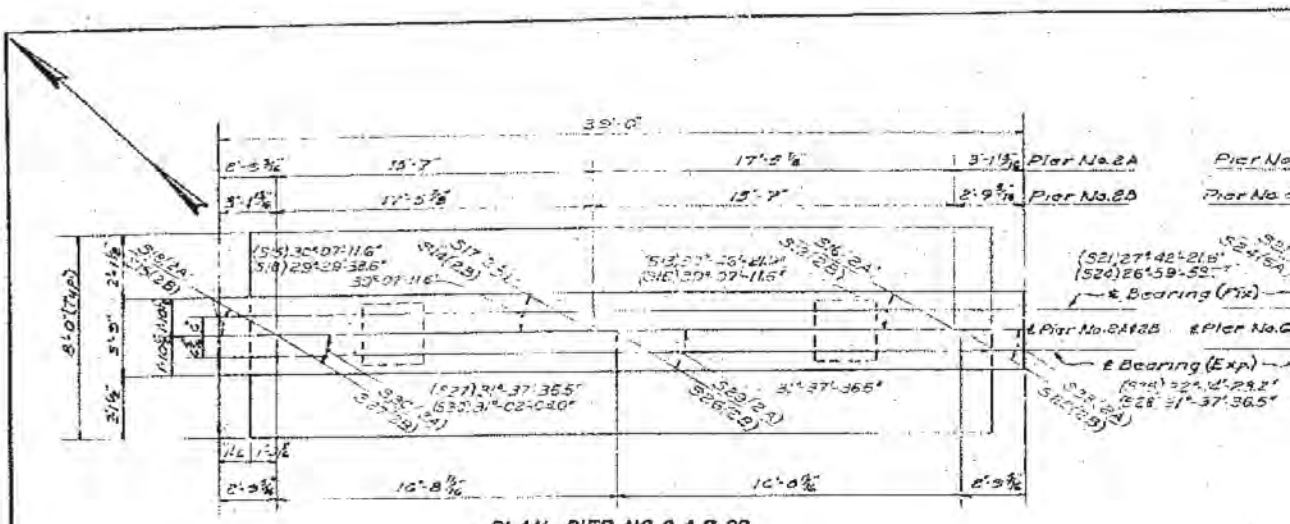


PLAN–PIER NO.2-A & 2B
SCALE: 1/4"=1'-0"

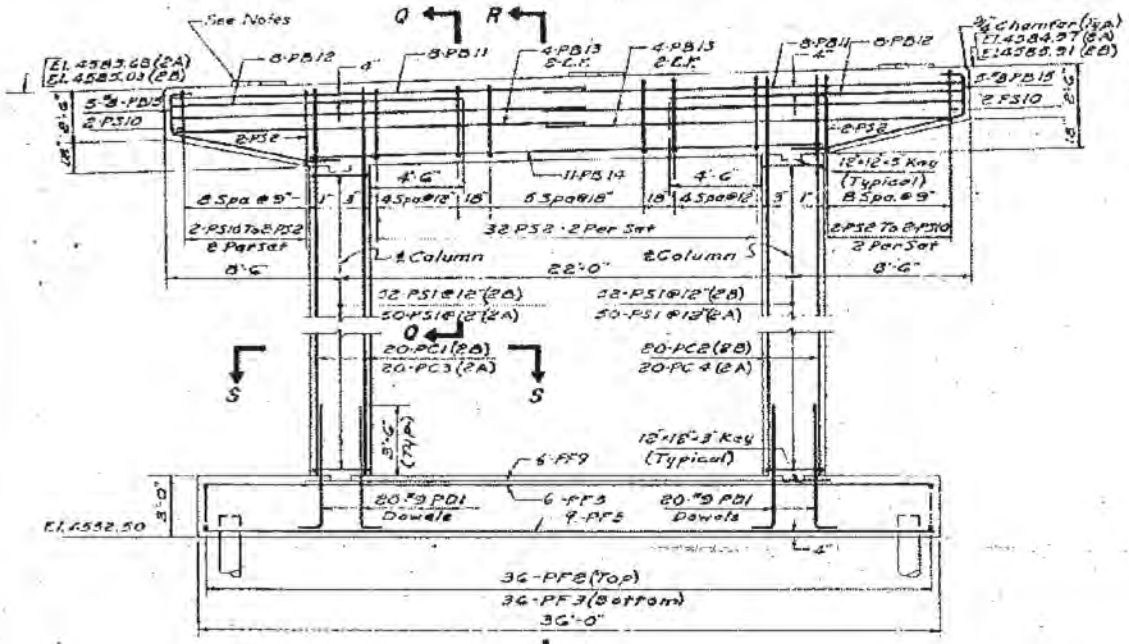


ELEVATION
SCALE: 1/4"=1'-0"

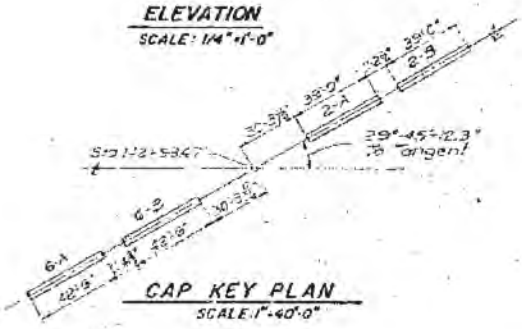

CAP KEY PLAN
SCALE: 1"=40'-0"

FOR INFORMA

NOTE:
FOR ANCHOR BOLT
SEE SHEET NO. 17
FOR FOOTING LOCATI
DETAILS SEE SHEET
FOR BEARING DETAIL
FOR CONC. PAD DET

02-MAY-2005 DGN Files IPL PWBridge\16721\4433_C-043-18_Foundation

| FED. ROAD DIST. NO. | STATE | FED. AID PROJ. NO. | FISCAL YEAR | SHEET NO. | TOTAL SHEETS |
|---|---|---|---|---|---|
| VT | UTAH | | | | |

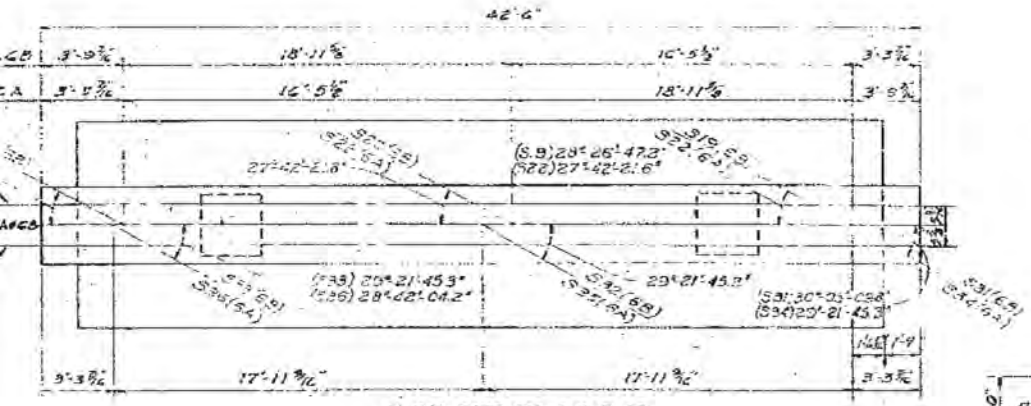


PLAN-PIER NO. 6-A & 6B

SCALE: 1/4"=1'-0"

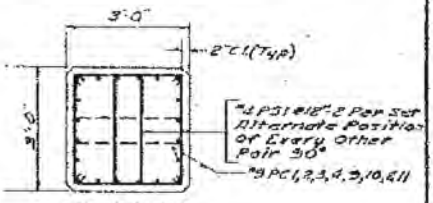


SECTION S-S

SCALE: 1/2"=1'-0"

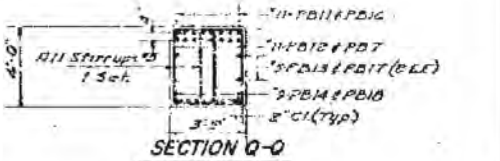


SECTION Q-Q

SCALE: 1/4"=1'-0"

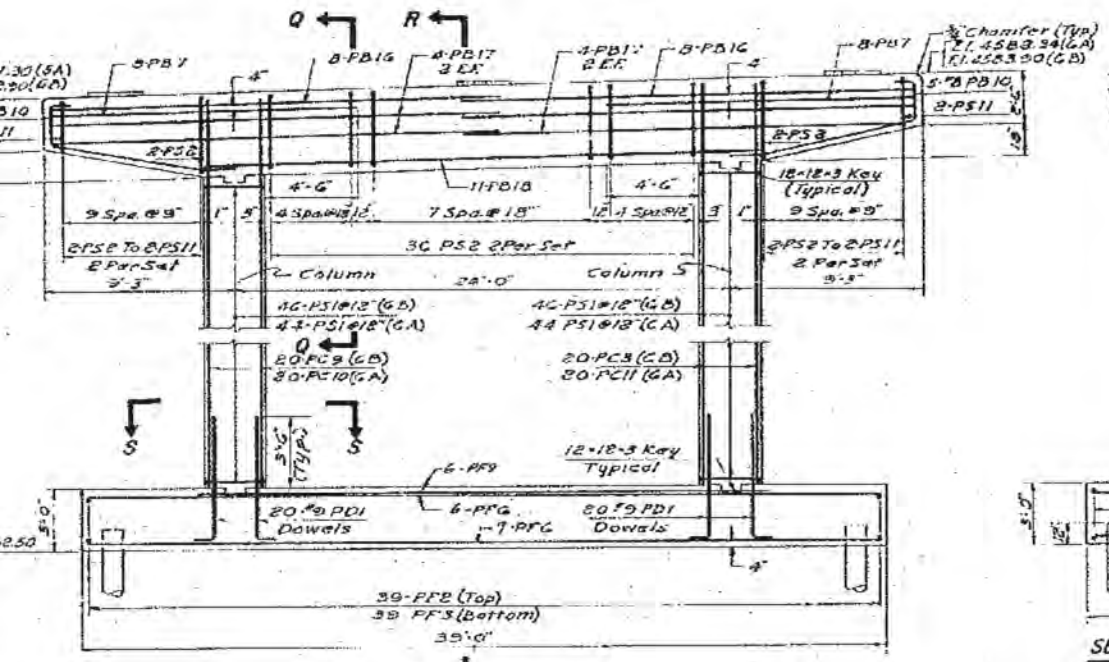


ELEVATION

SCALE: 1/4"=1'-0"

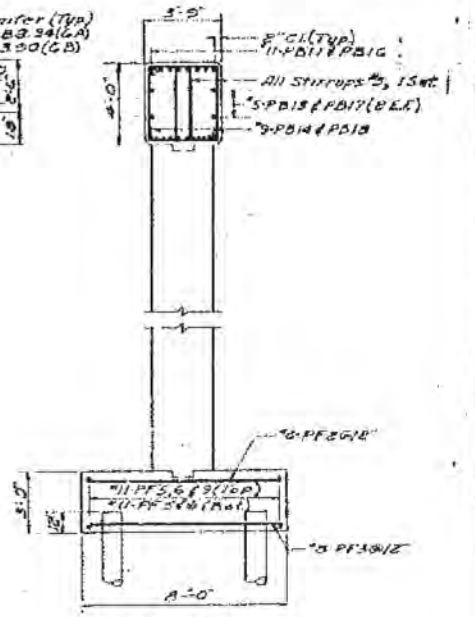


SECTION R-R

SCALE: 1/4"=1'-0"

**ATION ONLY**

IG-15-6(20) 277 2nd Contr.
I-15-6(19) 276 3rd Contr.

PIER NOS. 2-A & 2B 6-A & 6-B

| STR. NO. | ELEVATION PIER NO. 2B | STR. NO. | ELEVATION PIER NO. 2A | STR. NO. | ELEVATION PIER NO. 6B | STR. NO. | ELEVATION PIER NO. 6A |
|---|---|---|---|---|---|---|---|
| 13 | 4586.31 | 16 | 4585.02 | 19 | 4584.35 | 22 | 4582.78 |
| 14 | 4585.96 | 17 | 4584.57 | 20 | 4583.89 | 23 | 4582.23 |
| 15 | 4585.49 | 18 | 4584.14 | 21 | 4583.32 | 24 | 4581.72 |
| 25 | 4586.27 | 28 | 4584.93 | 31 | 4584.26 | 34 | 4582.70 |
| 26 | 4585.82 | 29 | 4584.50 | 32 | 4583.75 | 35 | 4582.17 |
| 27 | 4585.38 | 30 | 4584.04 | 33 | 4583.23 | 36 | 4581.64 |

LOCATION PLAN

ON PLAN & PILE NO. 6B

S SEE SHEET [redacted]

AILS SEE SHEET NO 17

DESIGN AND DRAWING BY
WESTERN ENGINEERS, INC. AND
EDWARDS AND KELCEY
CONSULTING ENGINEERS

SUBMITTED BY [signature] CHIEF ENGINEER

UTAH ENGR. LIC. NO. 2288

SHEET 19 OF 31 SHEETS

UTAH STATE ROAD COMMISSION
SALT LAKE CITY, UTAH
BRIDGE DEPARTMENT

EAST LEHI U.P. & U.S. 91 OVERPASS

445'-3" O. TO O. HOR. CURVE
STA 143+89.44
LEHI PROVO. UTAH COUNTY

DESIGNED BY K.S.
DRAWN BY T.Q.
TRACED BY T.Q.
CHECKED BY T.Q.

DATE 12-1-67
APPROVED [illegible]
CHIEF BRIDGE ENGINEER

NO. C-343

STRUCTURE 1-1

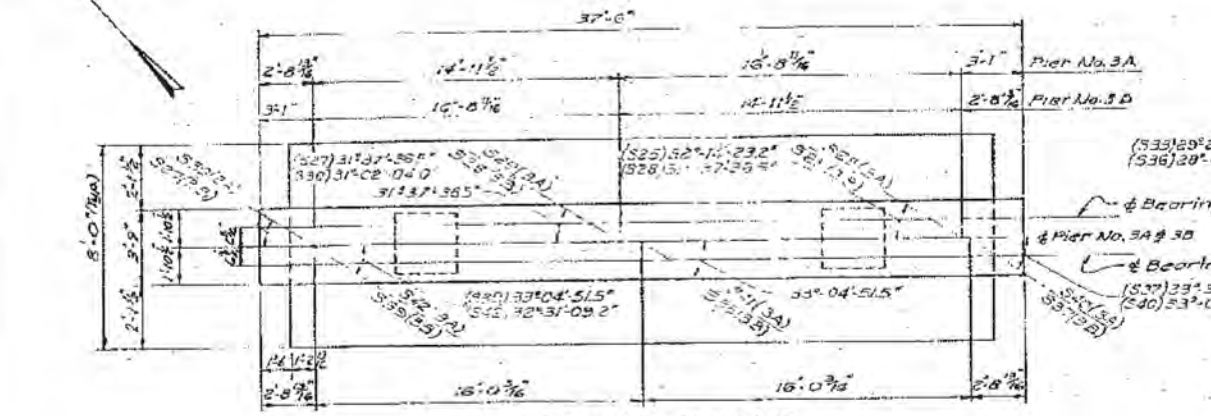


PLAN - PIER NOS. 3-A & 3B
SCALE: 1/4"=1'-0"

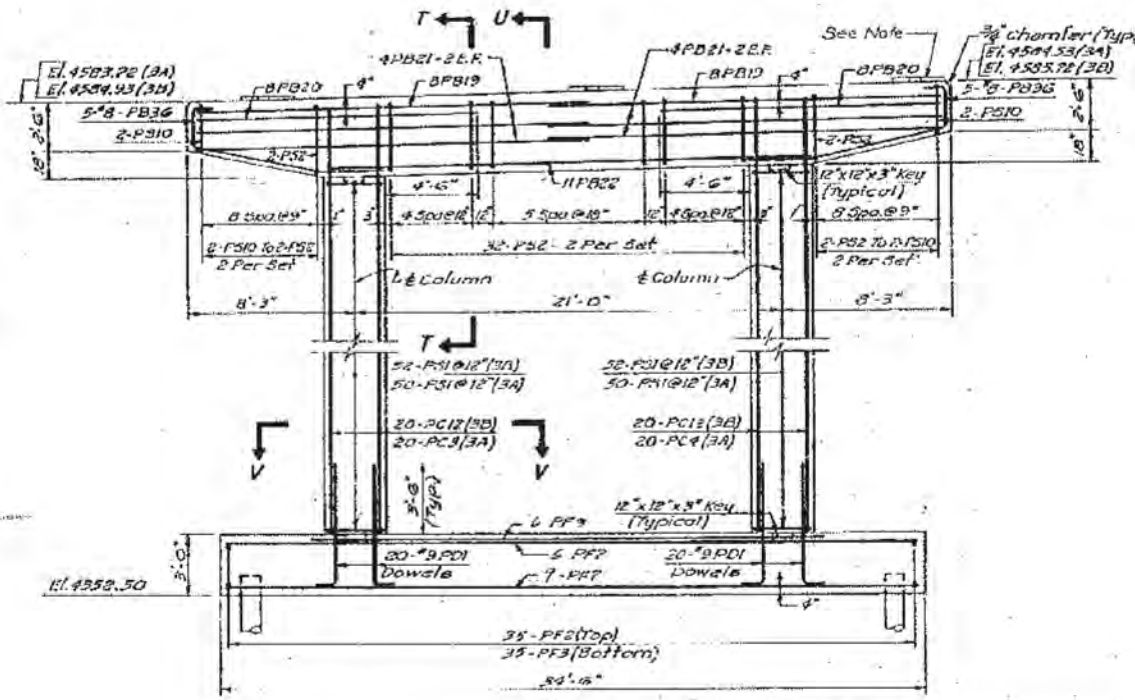


ELEVATION
SCALE: 1/4"=1'-0"

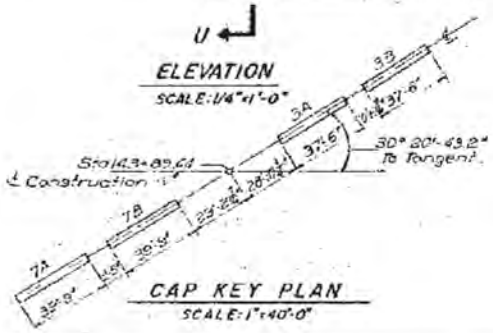


CAP KEY PLAN
SCALE: 1"=40'-0"

FOR INFOR

NOTE:
FOR ANCHOR BOLT LOCATI
SEE SHEET NO. 17
FOR FOOTING LOCATION PLA
DETAILS SEE SHEET NO. 6
FOR BEARING DETAILS SEE S
FOR CONC. PAD DETAILS

DGN File: 18-PW\Plans\16721\4433.C-343-18_for info.dgn
BS-HWY-2005

| FED. ROAD DIV. NO. | STATE | FED. AID PROJ. NO. | FISCAL YEAR | SHEET NO. | TOTAL SHEETS |
|---|---|---|---|---|---|
| UT | UTAH | | | | |

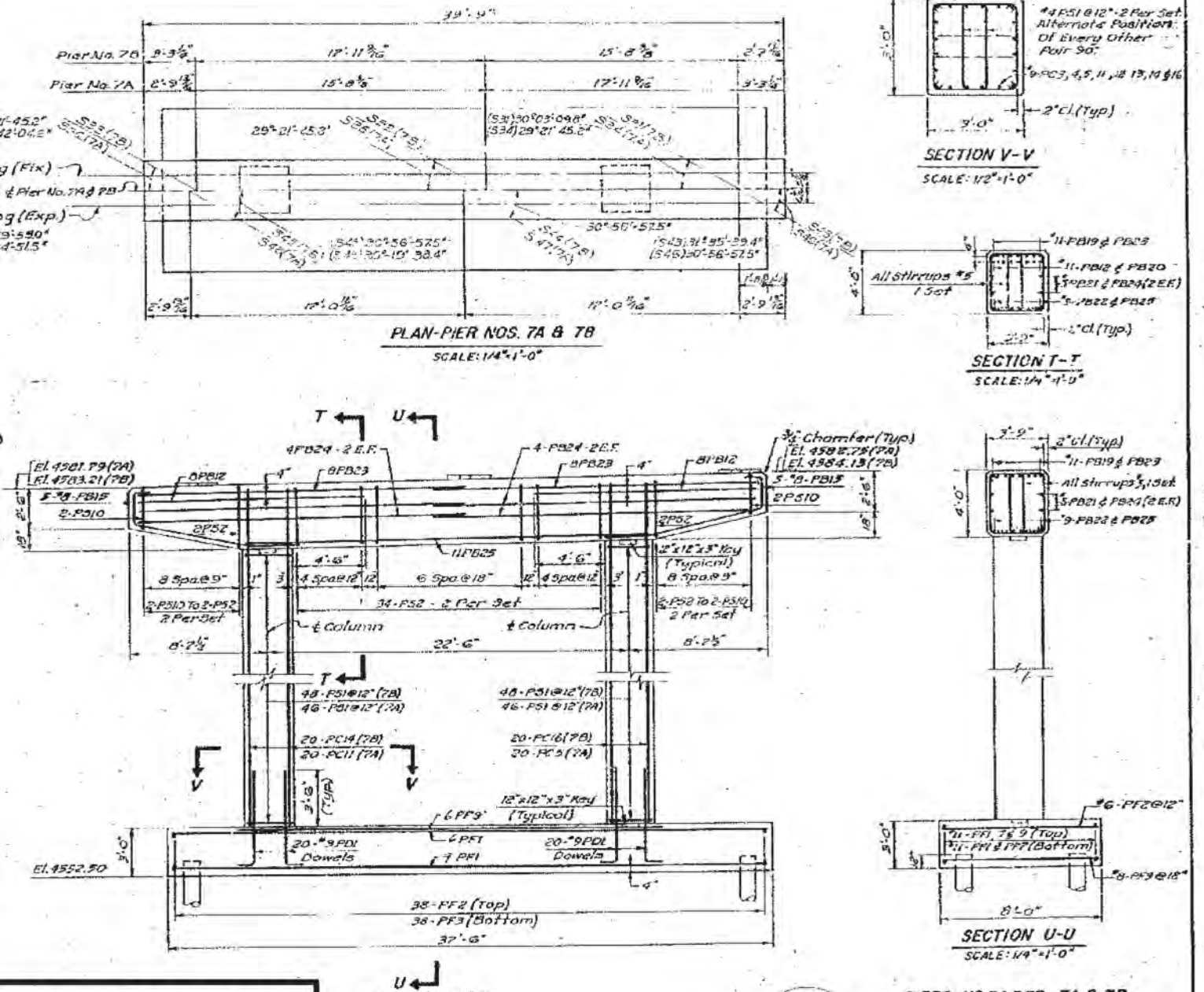


**RMATION ONLY**

IG-15-6(20)271 2nd Contr.
I-15-6(19)276 3rd Contr.

| STR. NO. | ELEVATION PIER NO.3B | STR. NO. | ELEVATION PIER NO.3A | STR. NO. | ELEVATION PIER NO.7B | STR. NO. | ELEVATION PIER NO.7A |
|---|---|---|---|---|---|---|---|
| 25 | 4586.12 | 28 | 4586.38 | 31 | 4584.58 | 34 | 4583.19 |
| 26 | 4585.81 | 29 | 4586.55 | 32 | 4584.15 | 35 | 4582.70 |
| 27 | 4585.40 | 30 | 4584.18 | 33 | 4583.67 | 36 | 4582.24 |
| 37 | 4580.00 | 40 | 4584.82 | 43 | 4584.42 | 46 | 4583.04 |
| 38 | 4585.61 | 41 | 4584.42 | 44 | 4583.96 | 47 | 4582.57 |
| 39 | 4585.22 | 42 | 4584.01 | 45 | 4583.49 | 48 | 4582.08 |

ON PLAN
Y PILE
SHEET NO.21
SEE SHEET NO. 17

DESIGN AND DRAWING BY
WESTERN ENGINEERS, INC. AND
EDWARDS AND KELCEY
CONSULTING ENGINEERS

SUBMITTED BY: [signature] SENIOR ENGINEER
UTAH ENGR. LIC. NO. 2781

SHEET 19 OF 31 SHEETS

UTAH STATE ROAD COMMISSION
SALT LAKE CITY, UTAH
BRIDGE DEPARTMENT

EAST LEHI U.P. & U.S. 91 OVERPASS
445'-3" O. TO O. HOR. CURVE
STA. 143+83.44
LEHI PROVO UTAH COUNTY

DRAWN BY: K.Y. SCALE: AS NOTED
DATE:
CHECKED BY: E.G.D.
CHECKED BY: Y.G.
BR. NO. C-343

STRUCTURE 1-2

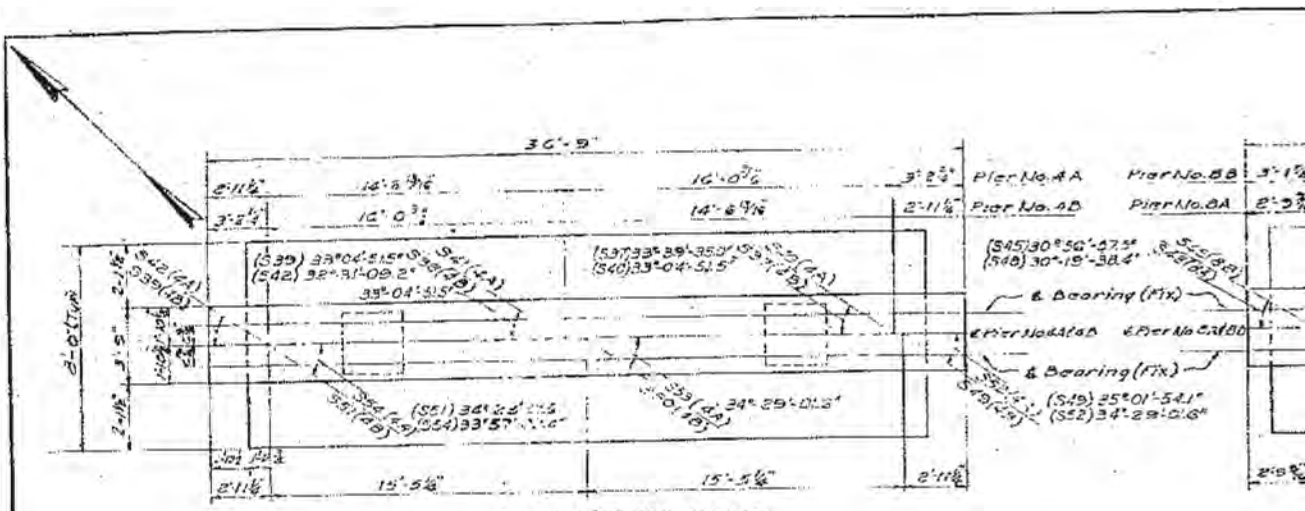


PLAN-PIER NOS. 4A & 4B

SCALE: 1/4" = 1'-0"

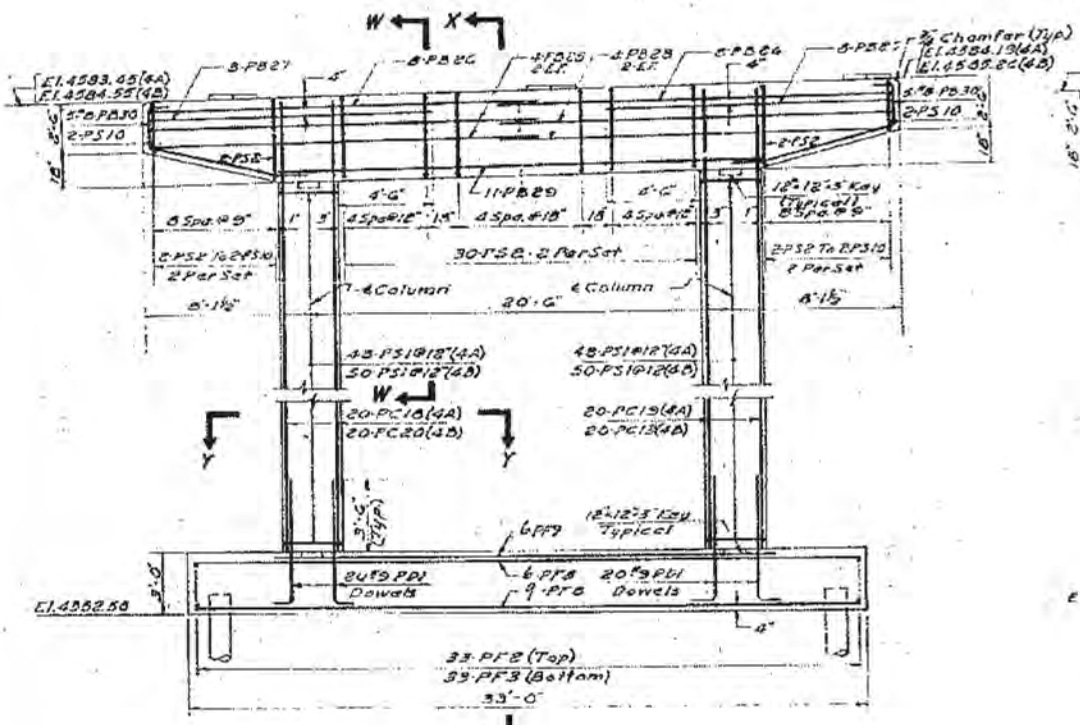


ELEVATION

SCALE: 1/4" = 1'-0"

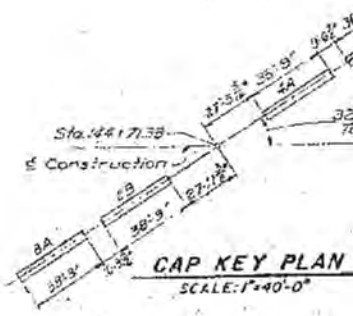


CAP KEY PLAN

SCALE: 1" = 40'-0"

**FOR INFORMATION ONLY**

DGN File: 18_PlaPlans\1672\4433.C-343-28_ForInfoOnly

RS-HWY-2605

| FED. ROAD DIST. NO. | STATE | FED. AID PROJ. NO. | FISCAL YEAR | SHEET NO. | TOTAL SHEETS |
|---|---|---|---|---|---|
| UT | UTAH | | | | |

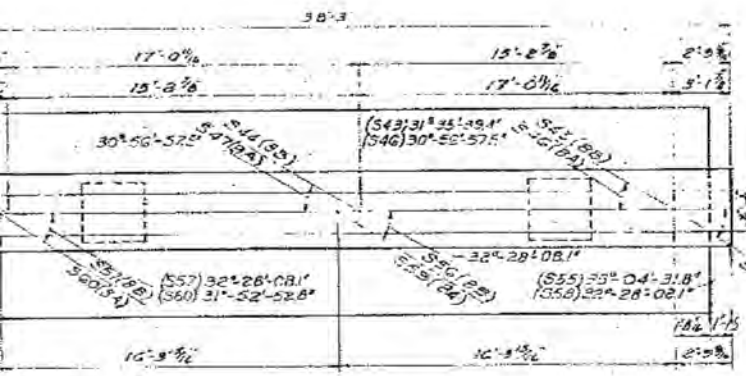


PLAN - PIER NOS. 8A & 8B

SCALE: 1/4" = 1'-0"

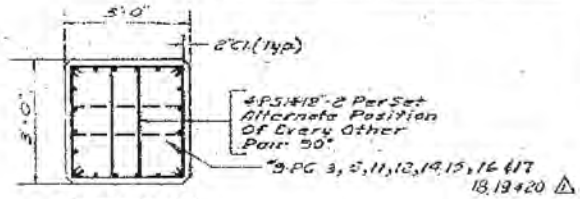


SECTION Y-Y

SCALE: 1/4" = 1'-0"

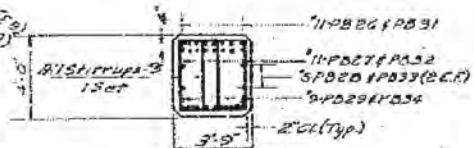


SECTION W-W

SCALE: 1/4" = 1'-0"

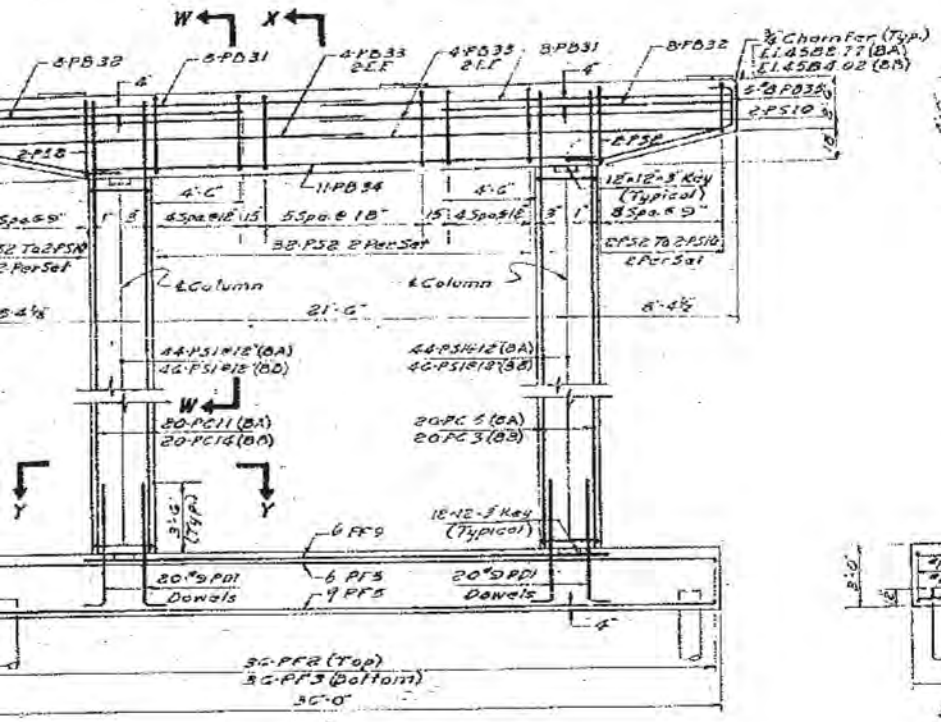


ELEVATION

SCALE: 1/4" = 1'-0"

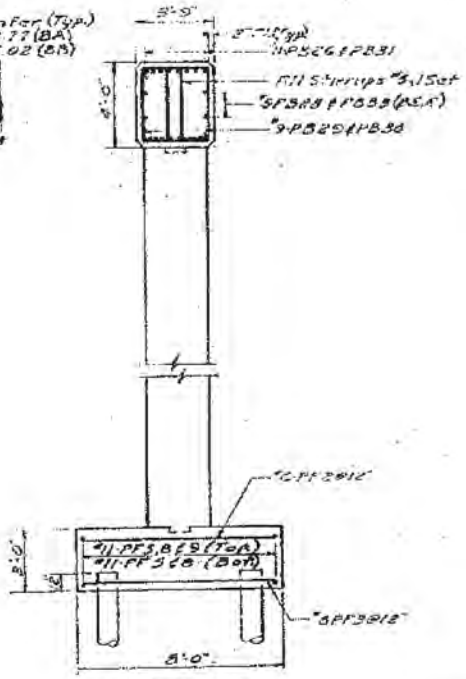


SECTION X-X

SCALE: 1/4" = 1'-0"

1G-15-6(20) 277 2nd Contr.
1-15-6(19) 276 3rd Contr.

⚠ R.J.S. 3-21-63 PC-18, 19 & 20

PIERS NO. 4A & 4B 8A & 8B

NOTE:
FOR FOOTING LOCATION PLAN &
PILE DETAILS SEE SHEET NO. 8
FOR BEARING DETAILS SEE SHEET NO. 21

| STR. NO. | ELEVATION PIER NO. 4B | STR. NO. | ELEVATION PIER NO. 4A | STR. NO. | ELEVATION PIER NO. 8B | STR. NO. | ELEVATION PIER NO. 8A |
|---|---|---|---|---|---|---|---|
| 37 | 4585.70 | 40 | 4584.60 | 43 | 4584.45 | 46 | 4583.19 |
| 38 | 4585.35 | 41 | 4584.23 | 44 | 4584.07 | 47 | 4582.75 |
| 39 | 4584.98 | 42 | 4583.88 | 45 | 4583.63 | 48 | 4582.35 |
| 49 | 4585.68 | 52 | 4584.61 | 55 | 4584.44 | 58 | 4583.19 |
| 50 | 4585.33 | 53 | 4584.25 | 56 | 4584.02 | 59 | 4582.75 |
| 51 | 4584.97 | 54 | 4583.87 | 57 | 4583.61 | 60 | 4582.34 |

REGISTERED PROFESSIONAL ENGINEER NO. 2308 STATE OF UTAH

DESIGN AND DRAWING BY
WESTERN ENGINEERS, INC. AND
EDWARDS AND KELCEY
CONSULTING ENGINEERS

SUBMITTED BY: H. Jack Kirkham
CHIEF ENGINEER
UTAH ENGR. LIC. NO. 2308

SHEET 20 OF 31 SHEETS

UTAH STATE ROAD COMMISSION
SALT LAKE CITY, UTAH
BRIDGE DEPARTMENT

EAST LEHI U.P. & U.S. 91 OVERPASS
445'-3" O. TO O. HOR. CURVE
STA. 143+89.44
LEHI - PROVO
UTAH COUNTY

DESIGNED BY K.Y. SCALE AS NOTED
DRAWN BY E.G.C. DATE 1-11-1963
TRACED BY
CHECKED BY Y.G.
APPROVED BY
BRIDGE ENGINEER
BR. NO.
DWG. NO. C-343

STRUCTURE 1-1

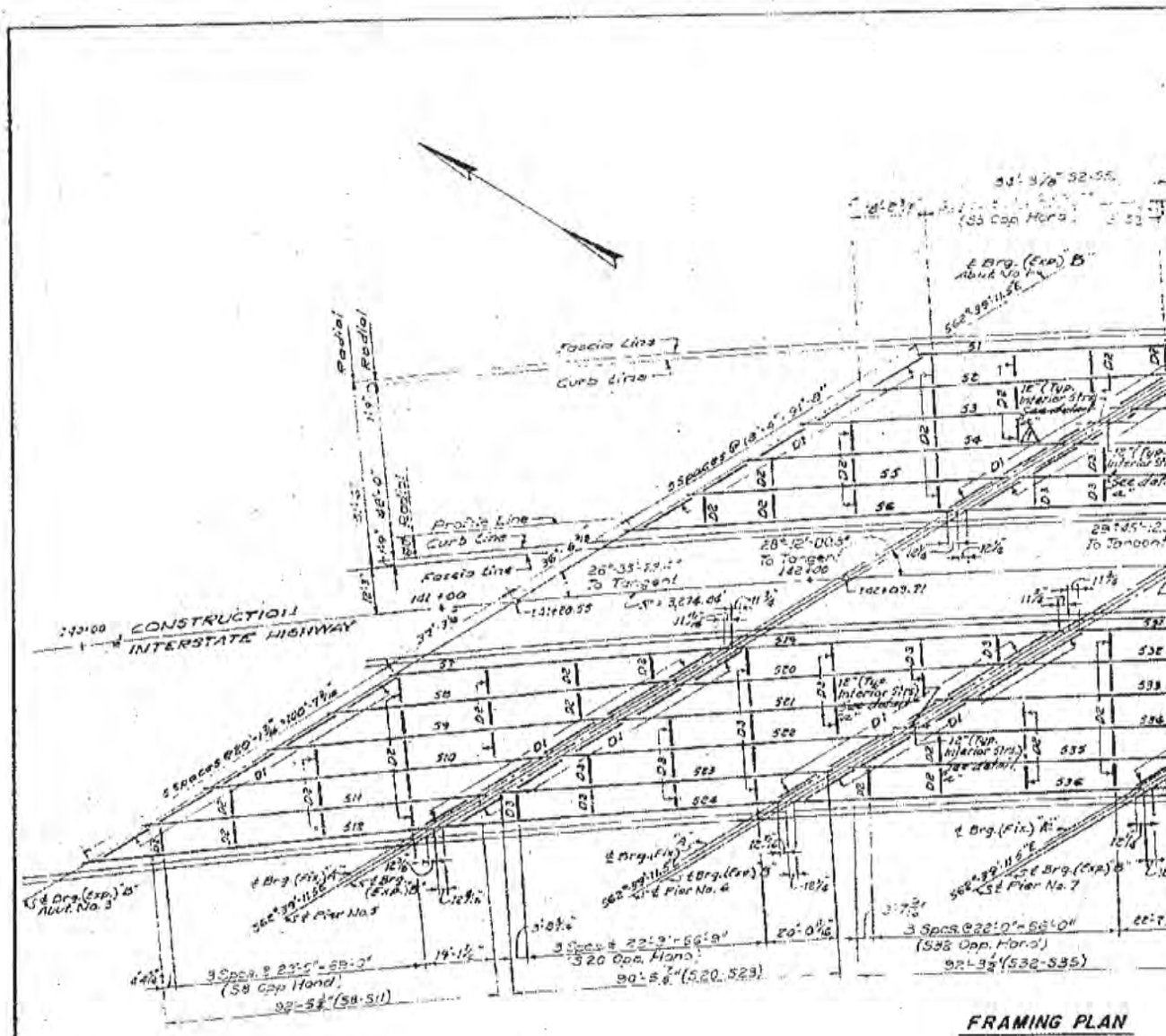


FOR INFO

DGN: Files:TP_PaPlans:115672\4433-C-343-21.dgn\Foundation

02-MAY-2008

| FED. ROADS DIST. NO. | STATE | FED. AID PROJ. NO. | FISCAL YEAR | SHEET NO. | TOTAL SHEETS |
|---|---|---|---|---|---|
| UT | UTAH | | | | |

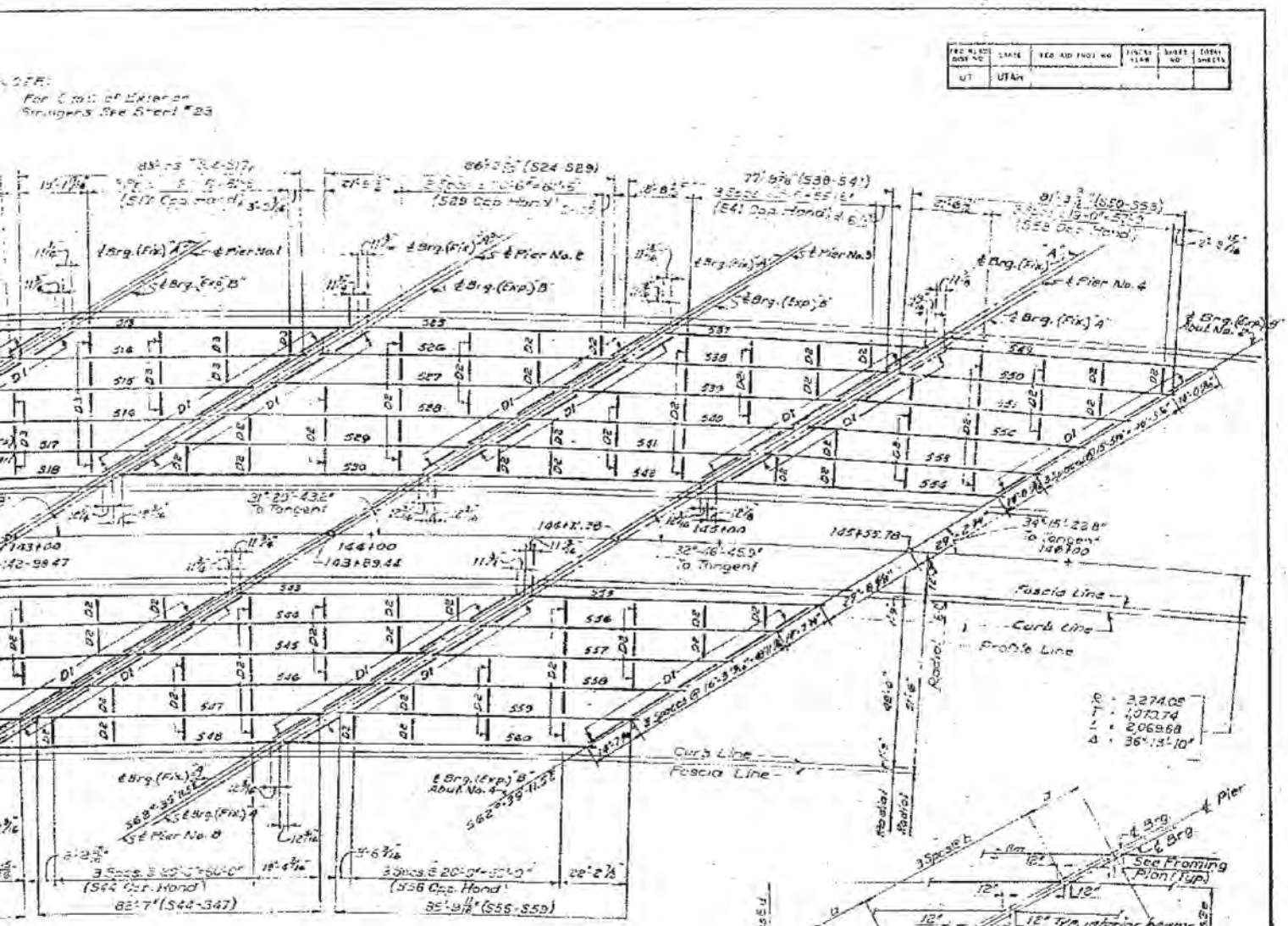


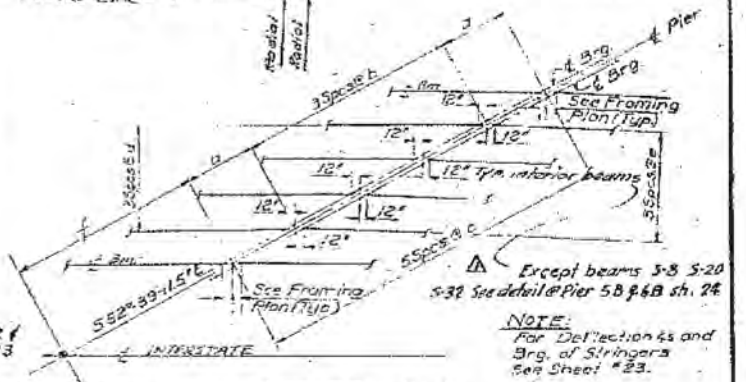


NOTES:
FOR STRINGER DETAILS SEE SCHEDULE SHEET NO. 23.
FOR LOCATION OF STRINGER BEARINGS SEE FOUNDATION, PIER & ABUTMENT SHEETS & SHEET NO. 23
BEARING DETAILS - STANDARD SS-3

DETAIL "a"

△ Except beams S-8 S-20 S-32 See detail @ Pier 5B & 6B sh. 24

NOTE:
For Deflection 4s and Brg. of Stringers See Sheet #23.

| Pier No. | a | b | c | d | e | |
|---|---|---|---|---|---|---|
| 1 | 16'-2 3/16" | 18'-4" | 17'-5 7/16" | 8'-9 7/16" | 8'-9 7/16" | 34'-5 7/16" |
| 2 | 15'-6 13/16" | 17'-5 7/16" | 16'-8 7/16" | 8'-9 7/16" | 8'-9 7/16" | 33'-7" |
| 3 | 14'-11 1/2" | 16'-8 7/16" | 16'-0 3/16" | 8'-8 7/16" | 8'-8 7/16" | 32'-7 1/16" |
| 4 | 14'-6 3/8" | 16'-0 3/16" | 15'-6 1/4" | 8'-8 7/16" | 8'-8 7/16" | 32'-4 7/16" |
| 5 | 14'-2 5/8" | 20'-1 3/16" | 18'-11 3/4" | 8'-10 1/2" | 8'-9 1/2" | 35'-3" |
| 6 | 16'-5 5/8" | 18'-11 3/4" | 17'-11 3/4" | 8'-9 3/16" | 8'-9 3/16" | 33'-7 7/16" |
| 7 | 15'-6 3/4" | 17'-11 3/4" | 17'-0 7/16" | 8'-9 7/16" | 8'-9 3/4" | 33'-8 5/16" |
| 8 | 15'-2 3/16" | 17'-0 7/16" | 16'-3 3/16" | 8'-9 7/16" | 8'-9 7/16" | 32'-8 5/16" |

FRAMING PLAN

SHEET 21 OF 31 SHEETS

ORMATION ONLY

IG-15-6(20)277 2nd Contr.
F-15-6(19) 276 3rd Contr.

△ Chat brackets Note for detail of Pier 5B omitted

DESIGN AND DRAWING BY:
WESTERN ENGINEERS, INC. AND
EDWARDS AND KELCEY
CONSULTING ENGINEERS

SUBMITTED BY: CHIEF ENGINEER
DATE ENGR. LIC. NO.

UTAH STATE ROAD COMMISSION
SALT LAKE CITY, UTAH
BRIDGE DEPARTMENT

EAST LEHI U.P. & U.S. 91 OVERPASS
445'-3" O. TO O. HOR. CURVE
STA. 143+89.44
LEHI PROVO UTAH COUNTY

DESIGNED BY J.L.B. SCALE AS NOTED
DRAWN BY F.G.C. DATE JANUARY 1, 1963
TRACED BY
CHECKED BY P.T.C.

No. C-343

STRUCTURE 1-2

**FOR INFORMATION ONLY**

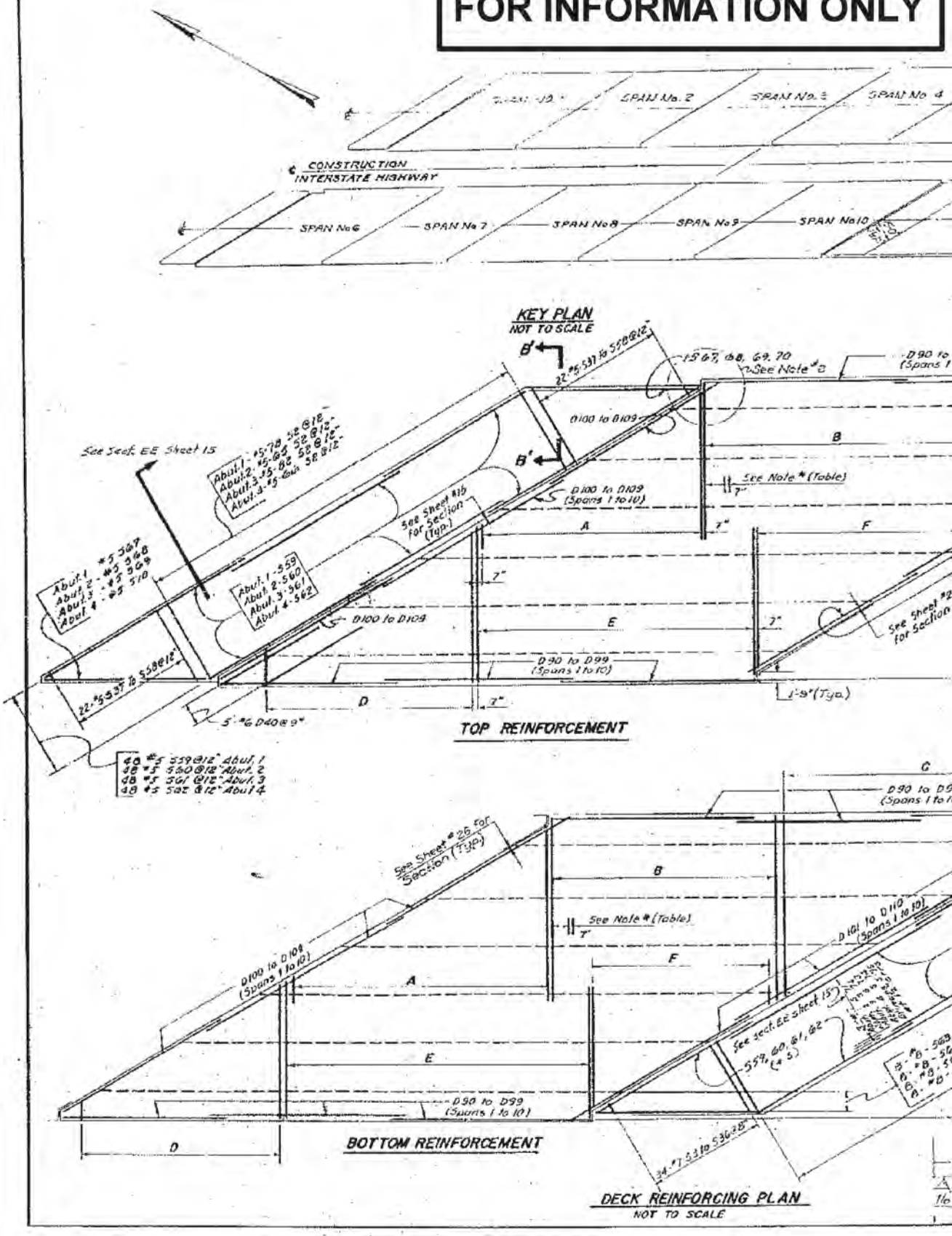

| FED. ROAD DIST. NO. | STATE | FED. AID PROJ. NO. | FISCAL YEAR | SHEET NO. | TOTAL SHEETS |
|---|---|---|---|---|---|
| UT | UTAH | | | | |

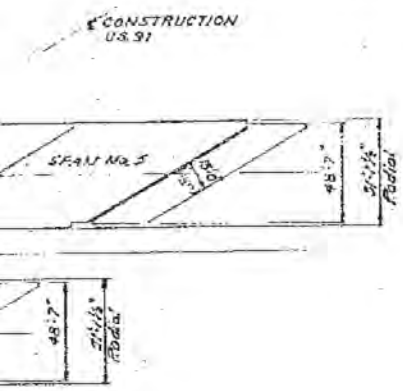


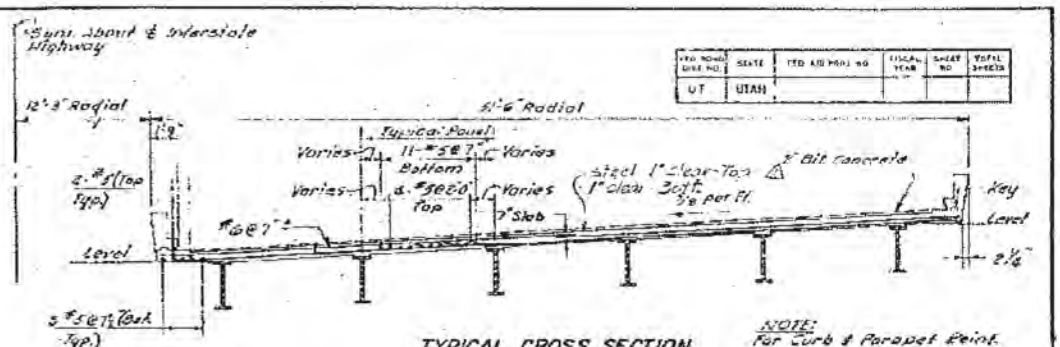


TYPICAL CROSS SECTION

SCALE: 3/16" = 1'-0"

NOTE:
For Curb & Parapet Point, See Drg. No. ST-1
Curb to curb chart sheet 3

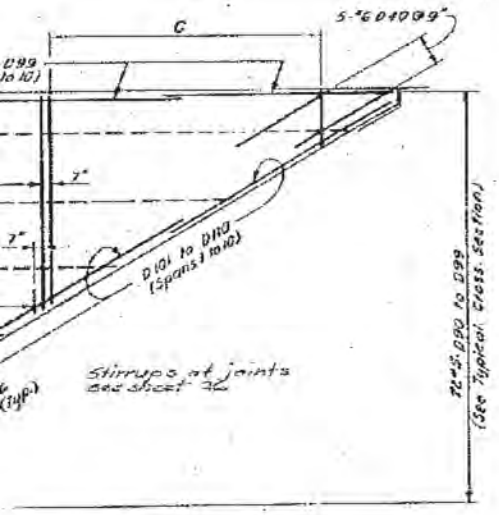


## TOP BAR SCHEDULE

| Span | A #6 @ 7" | B #6 @ 7" | C #6 - Varies | D #6 - Varies | E #6 @ 7" | F #6 @ 7" |
|---|---|---|---|---|---|---|
| 1 | 30-D1 to D70 | 70-D74 | 64-D73 to D10 | 64-D10 to D73 | 70-D74 | 70-D10 to D1 |
| 2 | do | 72-D74 | do | do | 72-D74 | do |
| 3 | 65-D4 to D68 | 80-D74 | do | do | 80-D74 | 65-D68 to D4 |
| 4 | 59-D10 to D68 | 71-D74 | do | do | 71-D74 | 59-D68 to D10 |
| 5 | do | 80-D74 | do | do | 80-D74 | do |
| 6* | 60-E1 to E80 | 71-D74 | 76-E87 to E12 | 76-E12 to E87 | do | 76-E81 to E6 |
| 7 | 75-E7 to E81 | 76-D74 | 64-D73 to D10 | do | 76-D74 | 73-D73 to D1 |
| 8 | 70-D1 to D70 | 87-D74 | do | 64-D10 to D73 | 87-D74 | 68-D68 to D1 |
| 9 | 68-D1 to D68 | 74-D74 | do | do | 74-D74 | do |
| 10 | 65-D4 to D68 | 87-D74 | do | do | 87-D74 | 65-D68 to D4 |

* Additional Bars are Required @ "A" (See Plan):
5-E81 @ 7"

## BOTTOM BAR SCHEDULE

| Span | A #6 @ 7" | B #6 @ 7" | C #6 - Varies | D #6 - Varies | E #6 @ 7" | F #6 - Varies |
|---|---|---|---|---|---|---|
| 1 | 86-D3 to D86 | 57-D88 | 83-D1 to D87 | 59-D1 to D59 | 86-D60 | 54-D54 to D1 |
| 2 | do | do | do | do | do | do |
| 3 | 76-D8 to D83 | 67-D88 | do | do | 93-D60 | 50-D54 to D5 |
| 4 | 71-D13 to D83 | 59-D88 | do | do | 83-D60 | do |
| 5 | 66-D18 to D83 | 71-D88 | do | do | 87-D60 | 50-D57 to D8 |
| 6* | 97-E1 to E97 | 57-D88 | 103-E103 to E1 | 10-E1 to E70 | 96-D60 | 60-E68 to E9 |
| 7* | 83-D1 to D83 | 82-D88 | 87-D1 to D57 | do | 93-D60 | do |
| 8 | do | 41-D88 | do | 59-D1 to D59 | 100-D60 | 54-D54 to D1 |
| 9 | 80-D4 to D83 | 59-D88 | do | do | 86-D60 | do |
| 10 | 74-D10 to D83 | 41-D88 | do | do | 100-D60 | 50-D54 to D5 |

* Additional Bars are Required @ "A" (See Plan):
5-E98 @ 7" (Span 6)
7-D77 to D83 @ 7" (Span 7)

## LONGIT. & EDGE BAR SCHEDULE

| Span | LONGITUDINAL BARS | EDGE BARS | |
|---|---|---|---|
| 1 | 180-#5 D90 | 6-#6 D100 N | 6-#6 D101 S |
| 2 | 180-#5 D91 | 6-#6 D101 N | 6-#6 D102 S |
| 3 | 180-#5 D92 | 6-#6 D102 N | 6-#6 D103 S |
| 4 | 180-#5 D93 | 6-#6 D103 N | 6-#6 D104 S |
| 5 | 180-#5 D94 | 6-#6 D104 N | 6-#6 D105 S |
| 6 | 180-#5 D95 | 6-#6 D105 N | 6-#6 D106 S |
| 7 | 180-#5 D96 | 6-#6 D106 N | 6-#6 D107 S |
| 8 | 180-#5 D97 | 6-#6 D107 N | 6-#6 D108 S |
| 9 | 180-#5 D98 | 6-#6 D108 N | 6-#6 D109 S |
| 10 | 180-#5 D99 | 6-#6 D109 N | 6-#6 D110 S |

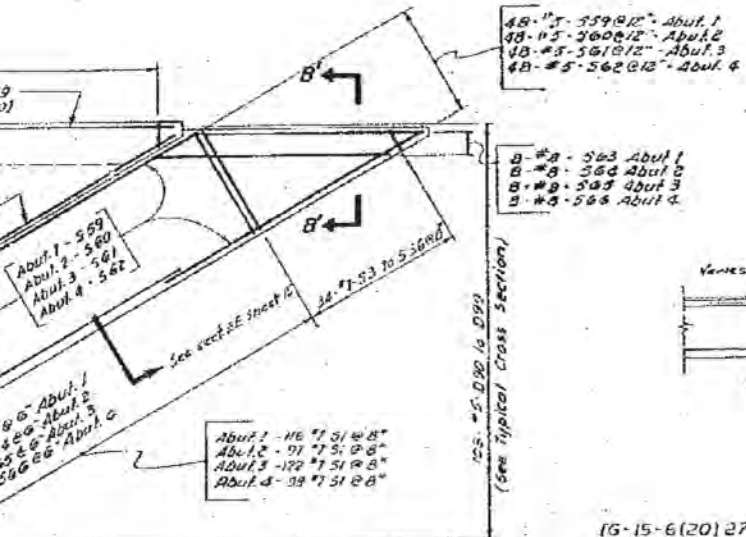


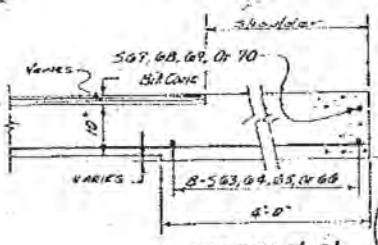


SECTION B'-B'

SCALE: 3/4" = 1'-0"

DECK REINFORCING PLAN

NOTES:
1. FOR CURB AND PARAPET DETAILS SEE DRG. NO. ST. 1
2. FOR ALL ABUTMENT CORNER DETAILS SEE SHEETS 9 TO 15

(G-15-6(20)277 2nd Contr.
I-15-6(19)276 3rd Contr.

| By | Date | Remarks |
|---|---|---|
| JKP | 4-11-63 | Clearance Top Bars 1" |

REVISIONS

DESIGN AND DRAWING BY
WESTERN ENGINEERS, INC. AND
EDWARDS AND KELCEY
CONSULTING ENGINEERS

SUBMITTED BY: CHIEF ENGINEER
UTAH CHIEF ENG. NO.

REGISTERED PROFESSIONAL ENGINEER NO. 2366 H. JOE LEONARD STATE OF UTAH

SHEET 22 OF 31 SHEETS

UTAH STATE ROAD COMMISSION
SALT LAKE CITY, UTAH
BRIDGE DEPARTMENT

EAST LEHI U.P. & U.S. 91 OVERPASS
445'-3" O. TO O. HOR. CURVE
STA. 143+85.44
LEHI PROVO UTAH COUNTY

DESIGNED BY J.L.B. SCALE AS NOTED
DRAWN BY J.L.B. ISSUED
TRACED BY P.L.C. APPROVED
CHECKED BY

NO. C-343

STRUCTURE 1-I

| STRINGER MARK | LENGTH C to C BEARINGS | WEB | SECTION A TOP PL | SECTION A BOT. PL | SECTION B TOP PL | SECTION B BOT. PL | SECTION C TOP PL | SECTION C BOT. PL | STIFF f/2 | |
|---|---|---|---|---|---|---|---|---|---|---|
| S1 | 82'-10 1/16 | 3/8 x 60 | 10 x 3/8 x 35'-0 1/16 | 16 x 1 1/2 x 37'-0 | — | — | 10 x 5/8 x 23'-11 | 16 x 3/4 x 15'-5 | 3 @ 5'-0 = 15'-0 | 28 |
| S2 | 84'-8 1/16 | do | 10 x 5/8 x 35'-0 | 16 x 1 1/2 x 36'-0 | — | — | 10 x 5/8 x 25'-4 1/2 | 16 x 3/4 x 16'-4 1/2 | do | |
| S3 | do | do | do | do | — | — | do | do | do | |
| S4 | do | do | do | do | — | — | do | do | do | |
| S5 | do | do | do | do | — | — | do | do | do | |
| S6 | 86'-6 5/16 | do | 10 x 1 1/8 x 43'-0 3/16 | 16 x 1 5/8 x 41'-0 1/2 | — | 16 x 1 1/8 x 8'-6 | 10 x 5/8 x 27'-9 1/2 | 16 x 3/4 x 14'-3 3/16 | 3 1/2 @ 4'-9 1/2 = 16'-9 | 28 |
| S7 | 89'-11 | do | 10 x 1 1/2 x 57'-0 | 16 x 1 3/4 x 41'-0 | — | 16 x 1 1/8 x 10'-0 | 10 x 5/8 x 18'-11 1/2 | 16 x 3/4 x 14'-5 1/2 | 3 @ 5'-0 = 15'-0 | |
| ⚠ S8 | 92'-0 3/4 | do | 10 x 1 1/2 x 50'-0 | 16 x 1 3/4 x 43'-0 | — | 16 x 1 1/4 x 11'-0 | 10 x 5/8 x 21'-2 3/8 | 16 x 3/4 x 13'-5 3/8 | 4 @ 4'-0 = 16'-0 | |
| S9 | 92'-5 3/4 | do | do | do | — | do | do | do | do | |
| S10 | do | do | do | do | — | do | do | do | do | |
| S11 | do | do | do | do | — | do | do | do | do | |
| S12 | 95'-0 3/16 | do | 10 x 1 1/2 x 28'-0 3/16 | 16 x 1 5/8 x 45'-0 1/2 | — | 16 x 1 3/8 x 12'-6 | 10 x 5/8 x 18'-6 1/4 | 16 x 3/4 x 12'-6 1/4 | 3 1/2 @ 5'-0 = 17'-6 | |
| S13 | 82'-1" | 5/16 x 35 | 20 x 1 1/2 x 33'-0 | 22 x 2 x 38'-0 | — | 22 x 1 1/2 x 8'-0 | 20 x 3/8 x 18'-2 1/2 | 22 x 1 1/4 x 7'-8 1/2 | — | |
| S14 | 83'-8 1/2 | do | 20 x 1 1/8 x 31'-0 | 22 x 2 x 38'-0 | — | 22 x 1 1/2 x 8'-6 | 20 x 3/8 x 20'-8 1/2 | 22 x 1 1/4 x 8'-0 1/2 | — | |
| S15 | do | do | do | do | — | do | do | do | — | |
| S16 | do | do | do | do | — | do | do | do | — | |
| S17 | do | do | do | do | — | do | do | do | — | |
| S18 | 85'-3 5/8 | do | 20 x 1 1/8 x 33'-0 | 22 x 2 1/4 x 31'-0 | — | 22 x 1 3/4 x 10'-0 | 20 x 3/8 x 16'-5 3/16 | 22 x 1 1/4 x 10'-9 13/16 | — | |
| S19 | 88'-3 11/16 | do | 20 x 1 1/2 x 48'-0 | 22 x 2 1/4 x 41'-0 | — | 22 x 1 3/4 x 8'-6 | 20 x 3/8 x 13'-9 5/8 | 22 x 1 1/2 x 9'-3 3/8 | — | |
| ⚠ S20 | 90'-3 3/8 | do | 20 x 1 1/2 x 48'-0 | 22 x 2 1/4 x 42'-0 | — | 22 x 1 1/2 x 8'-0 | 20 x 3/8 x 18'-10 5/16 | 22 x 1 1/2 x 9'-10 5/16 | — | |
| S21 | 90'-5 3/8 | do | do | do | — | do | do | do | — | |
| S22 | do | do | do | do | — | do | do | do | — | |
| S23 | do | do | do | do | — | do | do | do | — | |
| S24 | 92'-8" | do | 20 x 1 3/4 x 36'-0 | 22 x 2 3/4 x 39'-0 | 20 x 2 1/4 x 9'-0 | 22 x 2 x 9'-6 | 20 x 3/8 x 12'-0 | 22 x 1 1/4 x 11'-0 | — | |
| S25 | 84'-8 11/16 | 3/8 x 60 | 10 x 1 = 36'-0 1/16 | 16 x 1 1/2 x 35'-0 3/16 | — | — | 10 x 5/8 x 24'-3 7/16 | 16 x 3/4 x 16'-10 3/16 | 3 @ 5'-0 = 15'-0 | 28 |
| S26 | 86'-2 1/8 | do | 10 x 1 = 38'-0 1/16 | 16 x 1 1/2 x 36'-0 1/2 | — | — | 10 x 5/8 x 25'-7 | 16 x 3/4 x 15'-1 | do | |
| S27 | do | do | do | do | — | — | do | do | do | |
| S28 | do | do | do | do | — | — | do | do | do | |
| S29 | do | do | do | do | — | — | do | do | do | |
| S30 | 87'-7 3/4 | do | 10 x 1 3/8 x 46'-0 | 16 x 1 7/8 x 44'-0 | — | 16 x 1 1/16 x 8'-0 | 10 x 5/8 x 20'-9 3/8 | 16 x 3/4 x 13'-9 3/8 | 3 1/2 @ 4'-11 1/2 = 17'-4 1/2 | 4 @ |
| S31 | 90'-4 3/8 | do | 10 x 1 1/2 x 56'-0 | 16 x 1 3/4 x 42'-0 | — | 16 x 1 1/4 x 11'-0 | 10 x 5/8 x 18'-2 7/16 | 16 x 3/4 x 13'-2 7/16 | 3 @ 5'-0 = 15'-0 | |
| ⚠ S32 | 92'-1 | do | 10 x 1 1/2 x 50'-0 | 16 x 1 3/4 x 44'-0 | — | 16 x 1 1/4 x 11'-0 | 10 x 5/8 x 21'-1 5/8 | 16 x 3/4 x 13'-1 5/8 | 4 @ 4'-0 = 16'-0 | |
| S33 | 92'-3 3/4 | do | do | do | — | do | do | do | do | |
| S34 | do | do | do | do | — | do | do | do | do | |
| S35 | do | do | do | do | — | do | do | do | do | |
| S36 | 94'-2 11/16 | do | 10 x 1 1/2 x 50'-0 1/16 | 16 x 1 7/8 x 44'-0 1/16 | — | 16 x 1 1/8 x 12'-0 | 10 x 5/8 x 22'-1 1/8 | 16 x 3/4 x 13'-1 3/8 | 3 1/2 @ 4'-10 = 16'-11 | |
| S37 | 76'-6 7/16 | do | 10 x 5/8 x 76'-6 3/16 | 16 x 1 1/4 x 42'-0 1/16 | — | — | — | 16 x 3/4 x 17'-3 3/16 | 4 @ 4'-7" = 18'-4 | 18 |
| S38 | 77'-8 3/8 | do | 10 x 5/8 x 77'-8 3/16 | 16 x 1 1/4 x 42'-0 | — | — | — | 16 x 3/4 x 17'-10 3/16 | 4 @ 4'-8 1/2 = 18'-10 | |
| S39 | do | do | do | do | — | — | do | do | | |
| S40 | do | do | do | do | — | — | do | do | | |
| S41 | do | do | do | do | — | — | do | do | | |
| S42 | 78'-10 5/8 | do | 10 x 3/4 x 35'-0 | 16 x 1 1/2 x 42'-0 | — | — | 10 x 5/8 x 21'-11 7/16 | 16 x 3/4 x 16'-5 3/4 | 4 @ 4'-10 1/2 = 19'-5 | |
| S43 | 81'-0 13/16 | do | 10 x 3/8 x 31'-0 1/16 | 16 x 1 1/2 x 50'-0 1/16 | — | — | 10 x 5/8 x 25'-0 5/8 | 16 x 3/4 x 15'-6 5/8 | 3 @ 5'-0 = 15'-0 | 28 |
| S44 | 82'-7" | do | 10 x 1/2 x 29'-0 | 16 x 1 1/2 x 31'-0 | — | — | 10 x 5/8 x 26'-1 9/16 | 16 x 3/4 x 15'-7 1/2 | 3 @ 5'-0 = 17'-6 | 28 |
| S45 | do | do | do | do | — | — | do | do | do | |
| S46 | do | do | do | do | — | — | do | do | do | |
| S47 | do | do | do | do | — | — | do | do | do | |
| S48 | 84'-1 3/8 | do | 10 x 1 x 35'-0 | 16 x 1 1/2 x 54'-0 | — | — | 10 x 5/8 x 26'-6 1/2 | 16 x 3/4 x 15'-0 1/2 | 3 @ 5'-0 = 15'-0 | |
| S49 | 80'-2 3/8 | do | 10 x 3/8 x 28'-0 | 16 x 1 1/2 x 49'-0 | — | — | 10 x 5/8 x 24'-1 7/16 | 16 x 3/4 x 15'-7 1/16 | do | 28 |
| S50 | 81'-3 1/4 | do | 10 x 3/8 x 33'-0 | 16 x 1 1/8 x 49'-0 | — | — | 10 x 5/8 x 28'-1 1/8 | 16 x 3/4 x 16'-1 1/8 | do | |
| S51 | do | do | do | do | — | — | do | do | do | |
| S52 | do | do | do | do | — | — | do | do | do | |
| S53 | do | do | do | do | — | — | do | do | do | |
| S54 | 82'-5 7/16 | do | 10 x 3/8 x 35'-0 1/16 | 16 x 1 1/2 x 52'-0 1/16 | — | — | 10 x 5/8 x 23'-8 9/16 | 16 x 3/4 x 15'-2 9/16 | 3 1/2 @ 5'-0 = 17'-6 | 28 |
| S55 | 84'-4 3/8 | do | 10 x 1 = 36'-0 | 16 x 1 1/2 x 55'-0 | — | — | 10 x 5/8 x 24'-2 1/16 | 16 x 3/4 x 16'-8 1/16 | 3 @ 5'-0 = 15'-0 | |
| S56 | 85'-9 11/16 | do | 10 x 1 = 38'-0 1/16 | 16 x 1 1/2 x 55'-0 1/16 | — | — | 10 x 5/8 x 25'-10 1/2 | 16 x 3/4 x 15'-9 11/16 | do | |
| S57 | do | do | do | do | — | — | do | do | do | |
| S58 | do | do | do | do | — | — | do | do | do | |
| S59 | do | do | do | do | — | — | do | do | do | |
| S60 | 87'-2 9/16 | do | 10 x 1 1/8 x 44'-0 1/16 | 16 x 1 5/8 x 42'-0 1/16 | — | 16 x 1 1/8 x 8'-6 | 10 x 5/8 x 21'-7 1/2 | 16 x 3/4 x 14'-7 1/2 | 3 1/2 @ 4'-10 5/8 = 17'-3 1/2 | 28 |

NOTE:
Cover plate dimensions shown under section C above are to ℄ bearings - 2'-2" should be added at abuts 1 & 3 (S1 to S12) - 1'-9 at abutments 2 & 4 and 10" at piers
⚠ unless otherwise shown in column "℄ Brg to end of beam".
See Detail at Pier 5B and 6B Sheet 24.
See beam details sheets 24 & 25.

FOR INF

| INNER SPACING | | | STUD SPACING | | | | | BEAM CAMBER (POINT OF MAX. CAMBER, L/2, L/2) | | | | BEARING | ℄ Brg. to end of beam (See note) | |
|---|---|---|---|---|---|---|---|---|---|---|---|---|---|---|
| g | h | J | a/2 | b | c | d | e | DEAD LOAD - " | TOTAL Δ INCHES | PROFILE FT. | EL. SLAB Δ x 1.25 | | South $k_s$ | North $k_n$ |
| 6 - 9'0 | 2@4'0 - 8'0 | 3@3'1⅝ - 9'5⅝ | 8@18" - 12'0 | 6@14" - 7'0 | 7@12" - 7'0 | 10@9" - 7'6 | 12@8" - 8'0 | 1½" | 2" | .023" | .10" | S 33°-19'-22.2" E | | |
| do | do | 3@3'5⅝ - 10'4⅝ | 9@18" - 13'6 | do | do | 11@9" - 8'3 | 10@8" - 6'8 | 1⅝" | 2⅛" | .024 | .10 | S 34°-01'-02.8" E | 3½" | |
| do | do | do | do | do | do | do | do | do | do | do | do | do | 8" | |
| do | do | do | do | do | do | do | do | do | do | do | do | do | | |
| do | do | do | do | do | do | do | do | do | do | do | do | do | | |
| 0 - 10'0 | 3@3'6⅝ - 10'6⅝ | — | 10@18" - 15'0 | 7@14" - 8'-2" | 8@12" - 8'0 | 5@10" - 5'-2" | 12@8" - 8'0 | 1¼" | 2¼" | .027 | .11 | S 34°-41'-01.1" E | | |
| do | 4@3'5⅝ - 13'11½ | — | 7@18" - 10'-6 | 5@16" - 6'-8 | 10@12" - 10'-0 | 7@10" - 5'-10 | 18@8" - 12'0 | ⅞" | 2⅜" | .031 | .11 | S 35°-48'-00.8" E | | |
| do | 6@3'6¼ - 14'2⅝ | — | 9@18" - 13'-6 | do | do | 6@10" - 5'-0 | 17@8" - 11'-4 | 1¼" | 2¼" | .032 | .12 | S 36°-35'-35.9" E | 3½" | |
| do | do | — | do | do | do | do | do | do | do | do | do | do | 7" | |
| do | do | — | do | do | do | do | do | do | do | do | do | do | | |
| do | do | — | do | do | do | do | do | do | do | do | do | do | | |
| do | 4@3'6½ - 14'0⅝ | — | 14@18" - 21'0 | 3@14" - 3'-6 | do | 20@6 - 13'-6 | — | 2" | 2½" | .040 | .13 | S 37°-21'-17.1" E | | |
| — | — | — | 5@16" - 6'-8 | 7@12" - 7'0 | 10@10" - 8'-4 | 11@8" - 7'-4 | 24@6" - 12'0 | 2⅜" | 2⅞" | .023 | .14 | S 31°-52'-08.6" E | | |
| — | — | — | 6@16" - 8'0 | 2@14" - 2'-4 | 14@10" - 11'-6" | 12@8" - 8'0 | do | 2¼" | 2⅞" | .029 | .14 | S 32°-31'-39.9" E | 4½" | 4½" |
| — | — | — | do | do | do | do | do | do | do | do | do | do | 8" | 8" |
| — | — | — | do | do | do | do | do | do | do | do | do | do | | |
| — | — | — | do | do | do | do | do | do | do | do | do | do | | |
| — | — | — | 9@16" - 12'0 | 7@12" - 7'0 | 6@10" - 5'0 | 11@8" - 7'-4 | 23@6" - 11'-6 | 2½" | 3" | .027 | .15 | S 33°-09'-32.8" E | | |
| — | — | — | 7@16" - 9'-4 | 6@12" - 6'-0 | 13@10" - 10'-10 | 10@8" - 6'-0" | do | 2¼" | 3¼" | .029 | .16 | S 34°-12'-24.3" E | | |
| — | — | — | 6@16" - 8'-8 | 8@12" - 8'0 | 12@10" - 10'-0 | 17@7" - 9'-11 | 19@6" - 9'-6 | do | do | .031 | .16 | S 34°-56'-44.3" E | 3½" | 4½" |
| — | — | — | do | do | do | do | do | do | do | do | do | do | 7" | 7" |
| — | — | — | do | do | do | do | do | do | do | do | do | do | | |
| — | — | — | do | do | do | do | do | do | do | do | do | do | | |
| 6 - 9'0 | 2@4'0 - 8'0 | 3@3'5⅝ - 10'4⅝ | 5@18" - 7'-6 | 10@12" - 10'-0 | 12@10" - 10'-0 | 13@8" - 8'-8" | 21@6" - 10'-6" | 2⅜" | 3⅜" | .034 | .17 | S 35°-39'-17.8" E | | |
| do | do | 3@3'6⅝ - 11'-1 | 8@18" - 13'-6 | do | 8@12" - 8'-0 | 10@9" - 7'-6 | 12@8" - 8'-0 | 1½" | 2" | .024 | .10 | S 30°-24'-44.3" E | | |
| do | do | do | 9@18" - 13'-6 | do | 7@12" - 7'-0 | 12@9" - 9'-0 | 10@8" - 6'-8 | 1⅝" | 2¼" | .027 | .10 | S 31°-01'-35.0" E | 4½" | 4½" |
| do | do | do | do | do | do | do | do | do | do | do | do | do | 8" | 8" |
| do | do | do | do | do | do | do | do | do | do | do | do | do | | |
| do | do | do | do | do | do | do | do | do | do | do | do | do | | |
| 0 - 10'0 | 3@3'5⅝ - 10'3⅝ | — | 10@18" - 13'0 | 7@14" - 8'-2 | do | 6@10" - 5'-0 | 13@8" - 8'-8 | 1¾" | 2⅜" | .029 | .11 | S 31°-37'-03.5" E | | |
| do | 4@3'6⅝ - 11'3⅝ | — | 8@18" - 12'0 | 5@16" - 6'-8 | 9@12" - 9'-0 | do | 19@8" - 12'-8 | 1⅛" | 2⅜" | .031 | .12 | S 32°-56'-01.7" E | | |
| do | 4@3'6⅝ - 11'1⅝ | — | do | do | do | 8@10" - 6'-8 | 18@8" - 12'0 | 1⅞" | 2⅜" | .034 | .12 | S 33°-17'-24.3" E | 3½" | 4½" |
| do | do | — | do | do | do | do | do | do | do | do | do | do | 7½" | 7" |
| do | do | — | do | do | do | do | do | do | do | do | do | do | | |
| do | do | — | do | do | do | do | do | do | do | do | do | do | | |
| do | 4@3'6¼ - 11'2⅝ | — | 13@18" - 19'-6 | 4@14" - 4'-8 | 9@12" - 9'-0 | 21@8" - 14'0 | — | 2" | 2½" | .037 | .12 | S 33°-57'-07.3" E | | |
| 6 - 4'6 | 3@4'0 - 12'0 | 1@3'3⅝ - 3'5⅝ | 7@18" - 10'-6 | 3@14" - 3'-6 | 10@12" - 10'-0 | 6@10" - 5'-0 | 14@8" - 9'-8 | 1⅜ | 1⅝" | .019 | .09 | S 28°-39'-36.5" E | | |
| do | do | 1@3'6⅝ - | do | do | do | do | 15@8" - 10'-0 | 1¼" | 1⅝" | .020 | .09 | S 29°-14'-20.0" E | 5½" | 4½" |
| do | do | do | do | do | do | do | do | do | do | do | do | do | 8½" | 8" |
| do | do | do | do | do | do | do | do | do | do | do | do | do | | |
| do | do | do | do | do | do | do | do | do | do | do | do | do | | |
| do | do | 1@3'6⅝ - 3'6⅝ | 6@18" - 9'-0 | 4@14" - 4'-8 | 11@12" - 11'-0 | 5@10" - 4'-2" | 16@8" - 10'-8 | 1⅜" | 1⅝" | .020 | .09 | S 30°-08'-02.3" E | | |
| 8 - 9'-8 | 2@4'3 - 8'-6 | 2@3'10½ - 7'8⅝ | 7@18" - 10'-6 | 6@14" - 7'-0 | 6@12" - 6'-0 | 14@9" - 10'-6 | 10@8" - 6'-8 | 1¼" | 1⅝" | .023 | .09 | S 31°-03'-32.1" E | | |
| 6 - 9'0 | 2@4'0 - 8'0 | 2@3'4½ - 6'8⅝ | do | 7@14" - 8'-2 | 7@12" - 7'0 | 12@9" - 9'-0 | do | 1⅜" | 1⅞" | .023 | .09 | S 31°-42'-14.0" E | 4½" | 4½" |
| do | do | do | do | do | do | do | do | do | do | do | do | do | 8" | 7½" |
| do | do | do | do | do | do | do | do | do | do | do | do | do | | |
| do | do | do | do | do | do | do | do | do | do | do | do | do | | |
| do | do | 3@3'4½ - 10'0⅝ | 8@18" - 12'0 | 6@14" - 7'0 | 7@12" - 7'0 | 10@9" - 7'-6 | 13@8" - 8'-8 | 1½" | 2" | .024 | .10 | S 32°-19'-35.1" E | | |
| 8 - 9'-4 | 2@4'2 - 8'-4 | 3@3'8⅝ - 7'5⅝ | 7@18" - 10'-6 | do | 6@12" - 6'-0 | 15@9" - 11'-3 | 8@8" - 5'-4 | 1⅜ | 1⅞ | .021 | .09 | S 27°-37'-17.4" E | | |
| do | do | 2@3'11⅝ - 7'11⅝ | do | do | do | do | 9@8" - 6'-0 | do | do | .023 | .09 | S 28°-10'-08.9" E | | 5½" |
| do | do | do | do | do | do | do | do | do | do | do | do | do | | 8½" |
| do | do | do | do | do | do | do | do | do | do | do | do | do | | |
| do | do | do | do | do | do | do | do | do | do | do | do | do | | |
| 6 - 9'0 | 2@4'0 - 8'0 | 2@3'6⅝ - 6'8⅝ | do | 7@14" - 8'-2 | 7@12" - 7'0 | 12@9" - 9'-0 | do | 1¼" | 2" | .023 | .10 | S 28°-42'-41.1" E | | |
| do | do | 3@3'4⅝ - 10'2⅝ | 8@18" - 12'0 | 6@14" - 7'0 | do | 11@9" - 8'-3 | 12@8" - 8'0 | do | do | .024 | .10 | S 29°-34'-39.2" E | | |
| do | do | 3@3'7⅝ - 10'10⅝ | do | do | do | 12@9" - 9'0 | 12@8" - 8'0 | 1⅜" | 2⅛" | .027 | .10 | S 30°-11'-03.4" E | | 4½" |
| do | do | do | do | do | do | do | do | do | do | do | do | do | | 8" |
| do | do | do | do | do | do | do | do | do | do | do | do | do | | |
| do | do | do | do | do | do | do | do | do | do | do | do | do | | |
| 0 - 10'0 | 3@3'6 - 10'-6 | — | 10@18" - 15'0 | 7@14" - 8'-2" | do | 5@10" - 4'-2 | 14@8" - 9'-8 | 1¾" | 2¼" | .029 | .11 | S 30°-46'-13.7" E | | |

[G-15-6(20) 277 2nd Contr.
[-15-6(19) 276 3rd Contr.

**ORMATION ONLY**

c/c changed on 5-8, 5-10, 5-12
℄ Brg 6-10-63 add $k_s$ & $k_n$ ℄ Brg to end of beam

| NO. | BY | DATE | REMARKS |
|---|---|---|---|

REVISIONS

UTAH STATE DEPARTMENT OF HIGHWAYS
SALT LAKE CITY, UTAH
STRUCTURES DIVISION

LEHI - PROVO
EAST LEHI UP & U.S. 91 OVERPASS
STRINGER SCHEDULE

| | | |
|---|---|---|
| DESIGNED BY | DETAILED BY: GSW | |
| DRAWN BY: GSW | CHECKED BY | PROJECT NUMBER |
| QUANTITIES BY | CHECKED BY | 1431 89.44 |
| APPROVAL RECOMMENDED BY | GROUP LEADER | REGION |
| APPROVED: Jan. 18, 1963 DATE | D.L. Sargent CHIEF STRUCTURES ENGR. | UTAH COUNTY |
| SHT. NO. | DWG. NO. C-343 | 23 OF 31 |

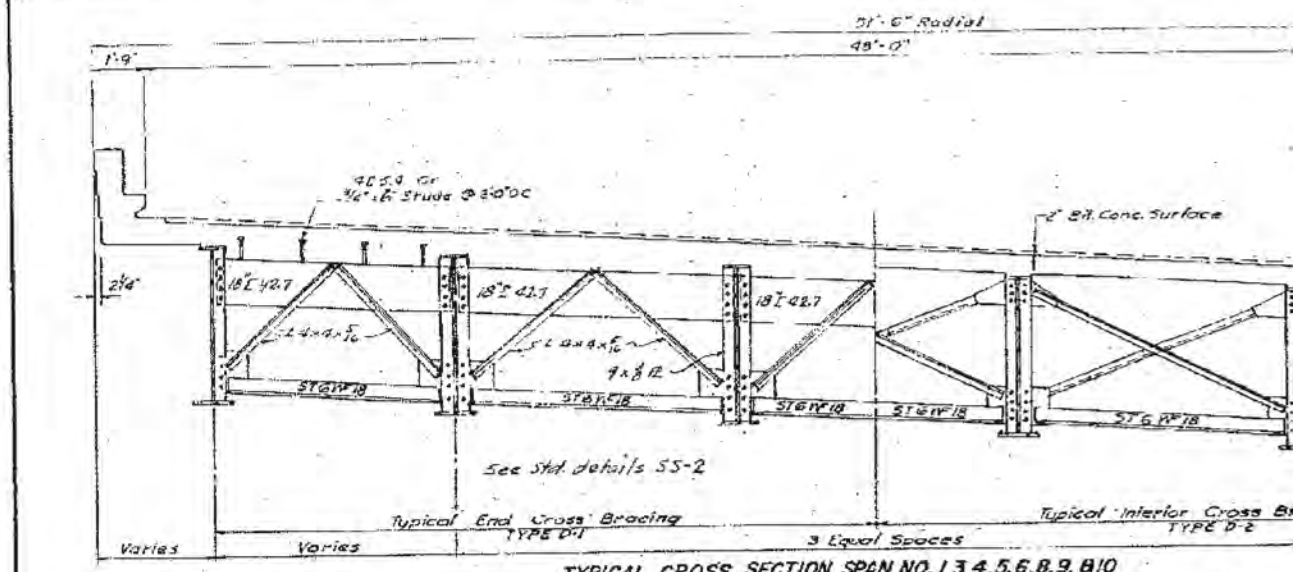


TYPICAL CROSS SECTION SPAN NO. 1,3,4,5,6,8,9, & 10

SCALE: 3/8" = 1'-0"

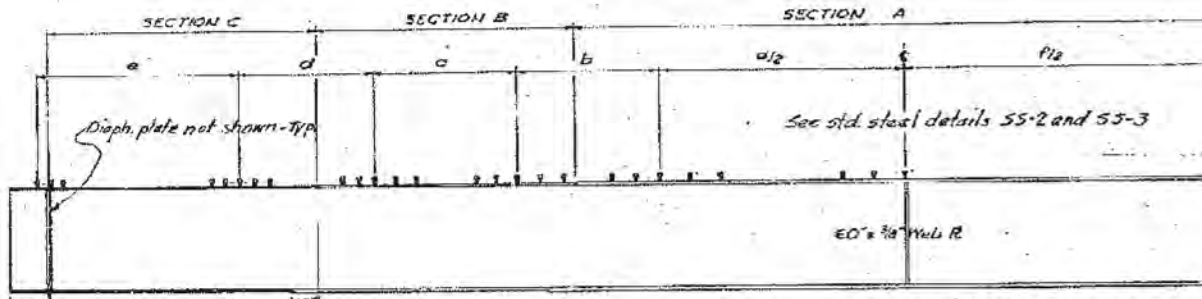


ELEVATION - STRINGERS SPAN NO. 1,3,4,5,6,8,9

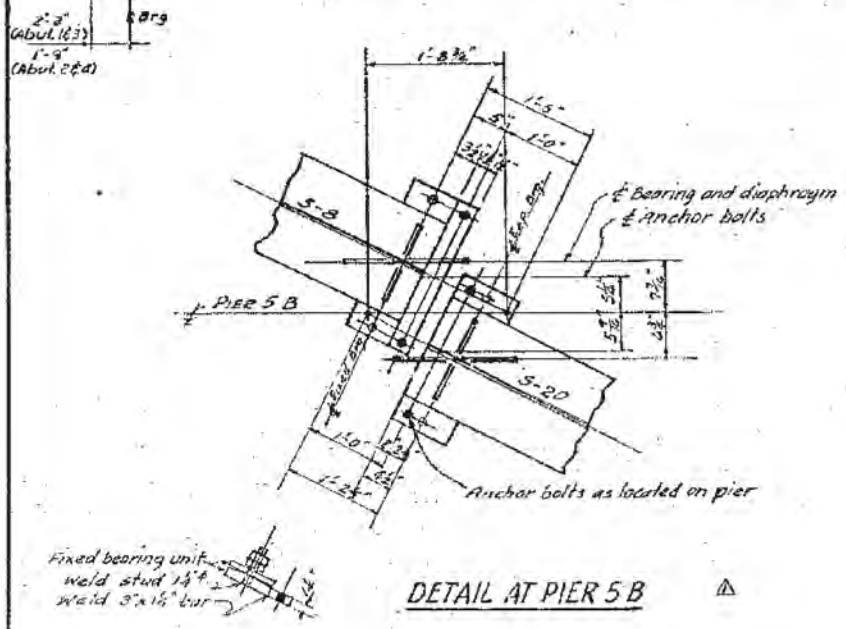


DETAIL AT PIER 5 B

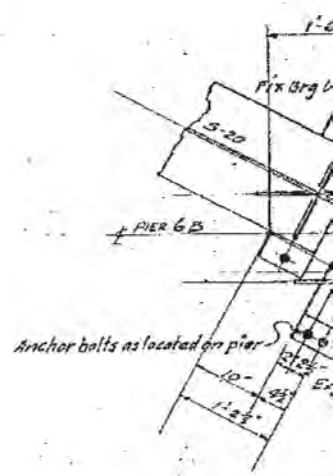


DETAIL AT PI

**FOR INFORMATION ONLY**

| FED ROAD DIST NO. | STATE | FED AID PROJ NO. | FISCAL YEAR | SHEET NO. | TOTAL SHEETS |
|---|---|---|---|---|---|
| UT | UTAH | | | | |

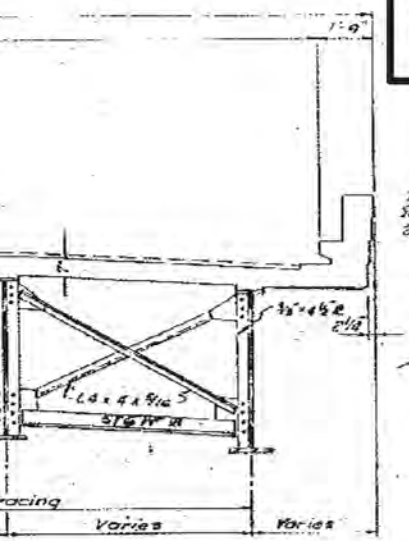


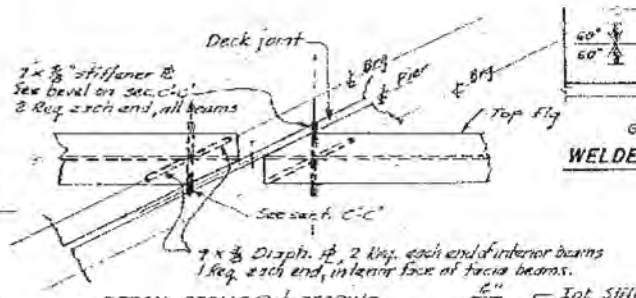


DETAIL BEAMS @ ℄ BEARING

⚠ OUTSIDE BEAMS

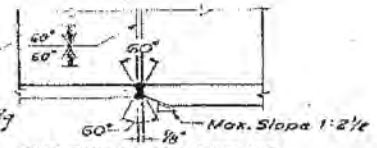


WELDED FLANGE SPLICE

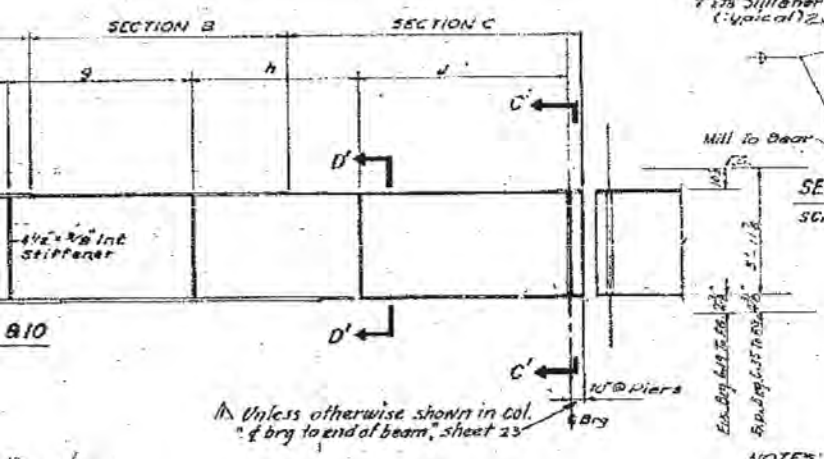


⚠ Unless otherwise shown in col. "℄ brg to end of beam", sheet 23

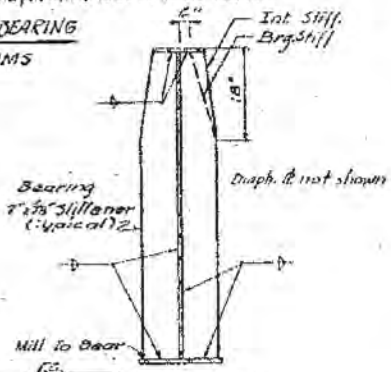


SECTION C'-C'

SCALE: 3/4" = 1'-0"

SECTION D'-D'

SCALE 3/4" = 1'-0"

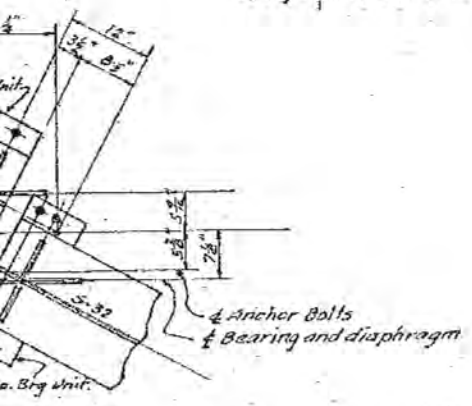


NOTES:

ALL WELDS 5/16" UNLESS OTHERWISE NOTED.
FOR CURB AND PARAPET REINFORCEMENT SEE SHEET NO. ST-1
FOR FRAMING PLAN SEE SHEET NO 21
FOR GIRDER TABLE SEE SHEET NO 23
FOR SHEAR CONNECTOR DETAILS SEE SHEET NO 25. FOR SPICING SEE SHEET NO 33.
ALL INTERMEDIATE STIFFENERS TO BE WELDED WITH A CONTINUOUS 5/16" FILLET WELD ALONG BOTH FACES OF TOP AND VERTICAL EDGES AND SHALL BE TIGHT FITTED AT THE BOTTOM.

WEB SPLICE SHALL BE LIMITED TO ONE PER STRINGER & SHALL NOT BE LOCATED AT CUT-OFF POINTS. ALL WEB SPLICES AND ALL FLANGE TENSION WELDS ARE TO BE RADIOGRAPHED.

STEEL DETAILS

ER 6B

⚠ 6-30-63 Detail at Pier 3B added

IG-15-6(20)277 2nd Contr.
I-15-6(19)276 3rd Contr.

DESIGN AND DRAWING BY
WESTERN ENGINEERS, INC. AND
EDWARDS AND KELCEY
CONSULTING ENGINEERS

SUBMITTED BY: CHIEF ENGINEER
UTAH ENGR. LIC. NO. 2338

SHEET 28 OF 31 SHEETS

UTAH STATE ROAD COMMISSION
SALT LAKE CITY, UTAH
BRIDGE DEPARTMENT

EAST LEHI U.P. & U.S.91 OVERPASS
445'-3" O.TO O. HOR. CURVE
STA. 143+89.44
LEHI PROVO UTAH COUNTY

DESIGNED BY J.L.B. SCALE AS NOTED
DRAWN BY J.D. DATE June 11, 1963
TRACED BY P.T.C. APPROVED D.L.Gray
CHECKED BY

DWG. NO. C-343

STRUCTURE

**FOR INFORMATION ONLY**

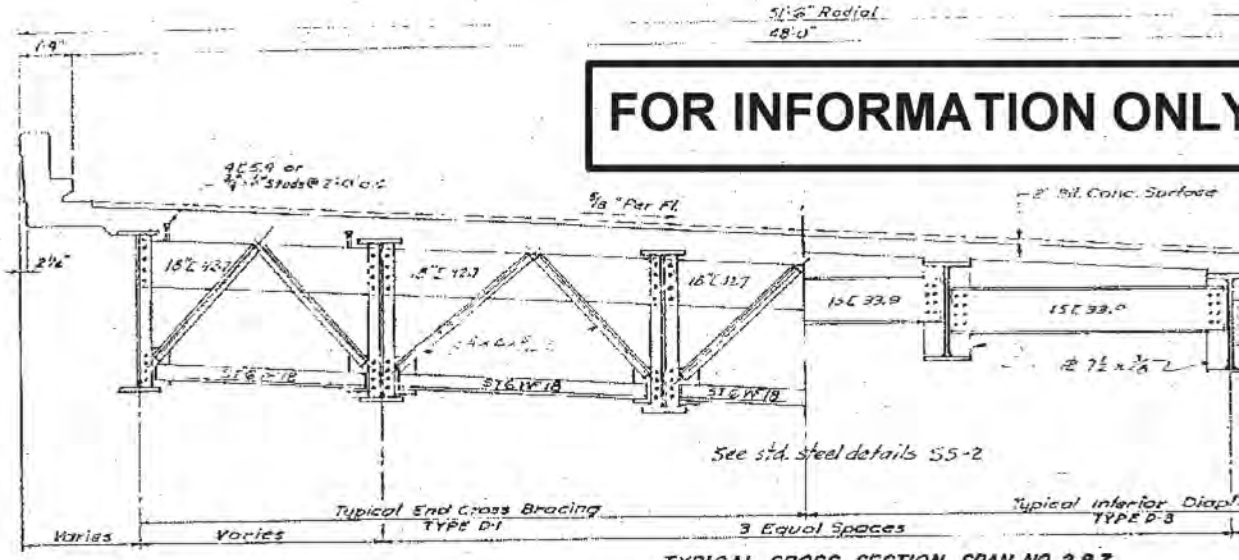


TYPICAL CROSS SECTION SPAN NO. 2 & 7

SCALE: 3/8" = 1'-0"

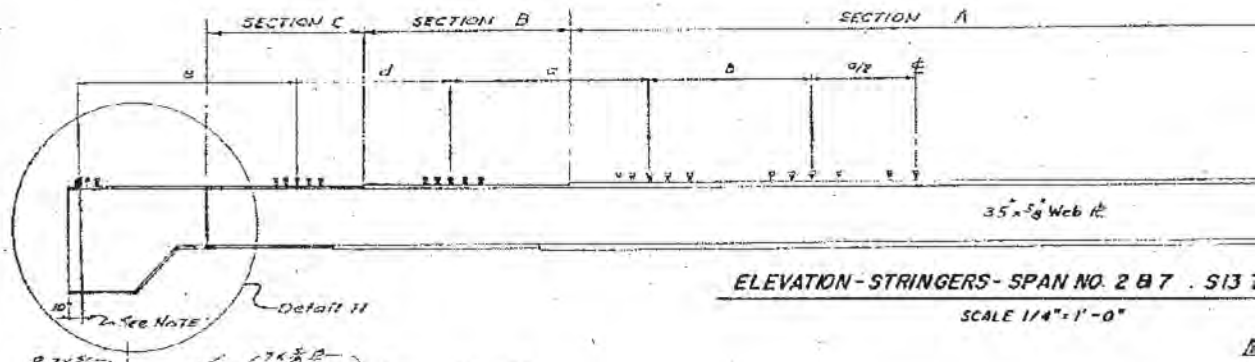


ELEVATION - STRINGERS - SPAN NO. 2 & 7 . S13

SCALE 1/4" = 1'-0"

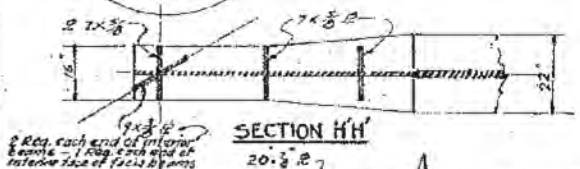


SECTION H'H'

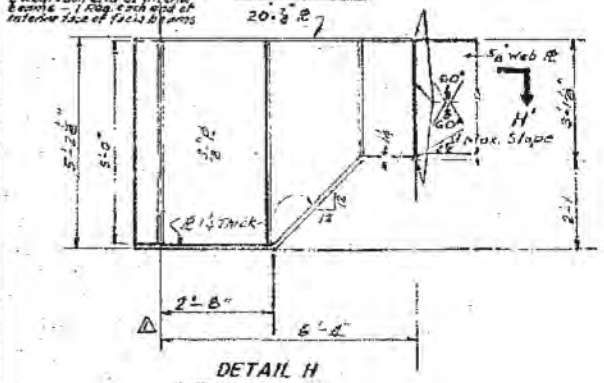


DETAIL H

SCALE: 1/2" = 1'-0"

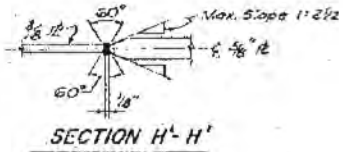


SECTION H'-H'

AT SPLICE

[redacted]

DGN Files 3P1 PW\Bridge\16721\4433.C-043-25.TownFoulton
02-MAY-2005

| FED. ROAD DIST. NO. | STATE | FED. AID PROJ. NO. | FISCAL YEAR | SHEET NO. | TOTAL SHEETS |
|---|---|---|---|---|---|
| UT | UTAH | | | | |

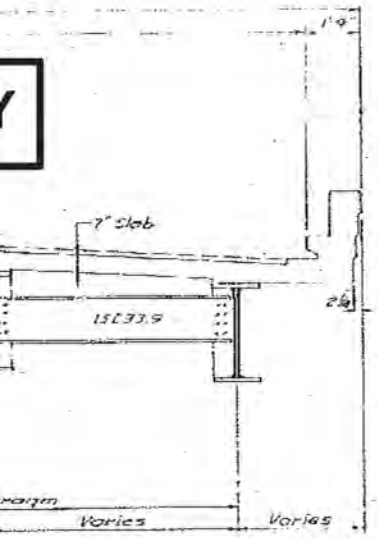


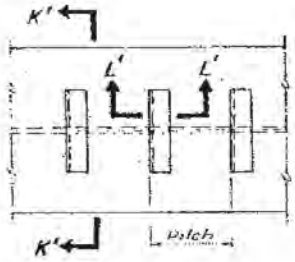


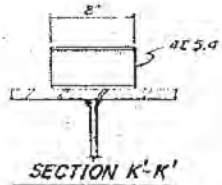


SECTION K'-K'

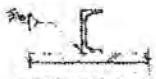

SECTION L-L

SHEAR CONNECTOR NOTE:

PAYMENT IS BASED ON THE WEIGHT OF 4-3/4" ϕ STUD CONNECTORS. EQUIVALENT CONNECTORS AS INDICATED IN THE TABLE BELOW MAY BE USED AT THE SAME SPACING.

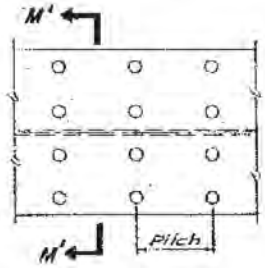


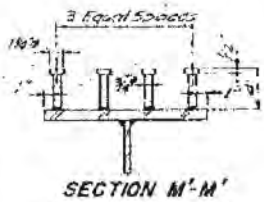


SECTION M'-M'

| EQUIVALENT CONNECTOR | SHEAR CAPACITY |
|---|---|
| CONNECTOR | CAPACITY |
| 4-3/4" ϕ Studs x 4" | 10.17 K |
| 3-7/8" ϕ Studs x 4" | 10.38 K |
| 4-C5.4 x 0'-8" | 10.40 K |

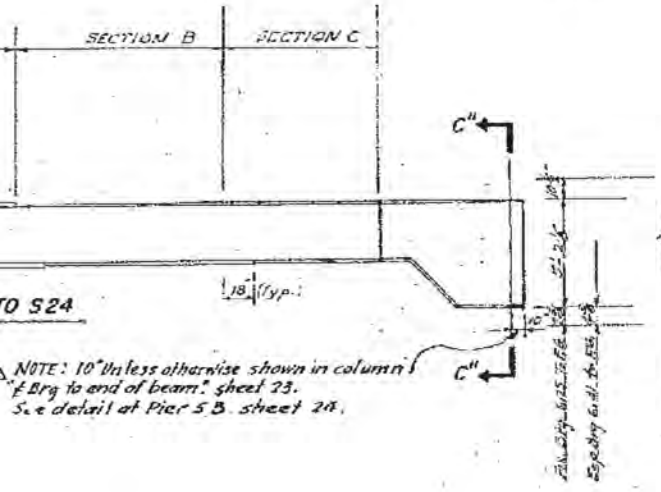


△ NOTE: 10" Unless otherwise shown in column "℄ Brg to end of beam". sheet 23.
See detail at Pier 5 B. sheet 24.

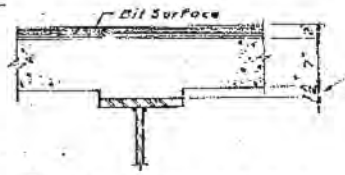


TYPICAL HAUNCH DETAIL

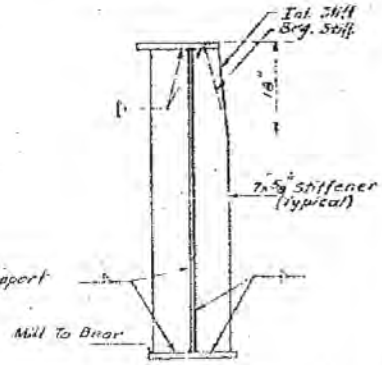


SECTION C"-C"
SCALE 3/4"=1'-0"

NOTES:

ALL WELDS 5/16" UNLESS OTHERWISE NOTED.
FOR CURB AND PARAPET REINFORCEMENT SEE SHEET NO ST-1
FOR FRAMING PLAN SEE SHEET NO 21
FOR STRINGER TABLE SEE SHEET NO 23
FOR SHEAR CONNECTOR SPACING SEE SHEET NO 23

WEB SPLICE SHALL BE LIMITED TO ONE PER STRINGER AND SHALL NOT BE LOCATED AT FLANGE CUT-OFF POINTS. ALL WEB SPLICES AND ALL FLANGE TENSION WELDS ARE TO BE RADIOGRAPHED.

STEEL DETAILS

SHEET 25 OF 31 SHEETS

IG-15-6(20)277 2nd Contr.
I-15-6(19)276 3rd Contr.

UTAH STATE ROAD COMMISSION
SALT LAKE CITY, UTAH
BRIDGE DEPARTMENT

EAST LEHI U.P. & U.S. 91 OVERPASS
445'-3" O. TO O. HOR. CURVE
STA. 143+84.44
LEHI PROVO UTAH COUNTY

DESIGNED BY J.L.B. SCALE AS NOTED
DRAWN BY J.D. DATE
CHECKED BY
CHECKED BY P.T.C.

DESIGN AND DRAWING BY
WESTERN ENGINEERS, INC. AND
EDWARDS AND KELCEY
CONSULTING ENGINEERS

SUBMITTED BY H. Lee Hansen CHIEF ENGINEER
UTAH ENGR. LIC. NO. 2-381

DWG. NO. C-343

STRUCTURE 1-2

△ Sign 6-20-73 Note added

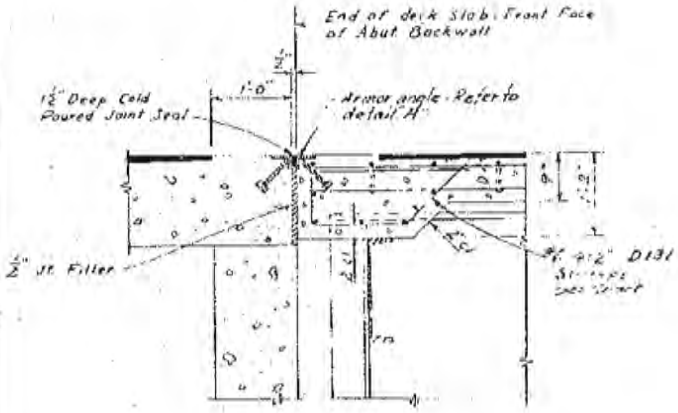


SECTION AT ABUTMENT
FIXED END BEARING
(NORMAL to Backwall)

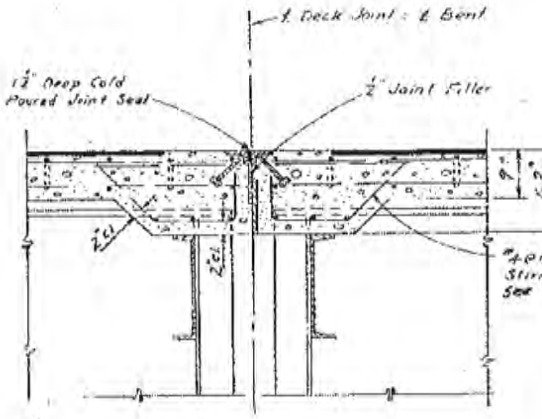


SECTION AT BENT
TWO FIXED BEARINGS
(Norm. to pier)

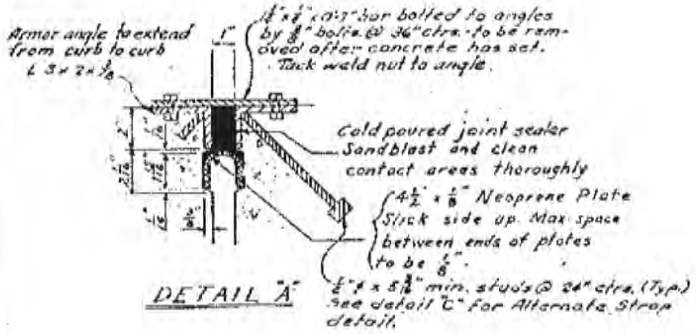


DETAIL "A"

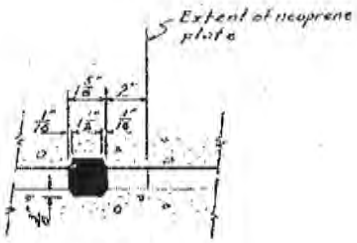


DETAIL "B"

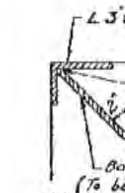

DETA

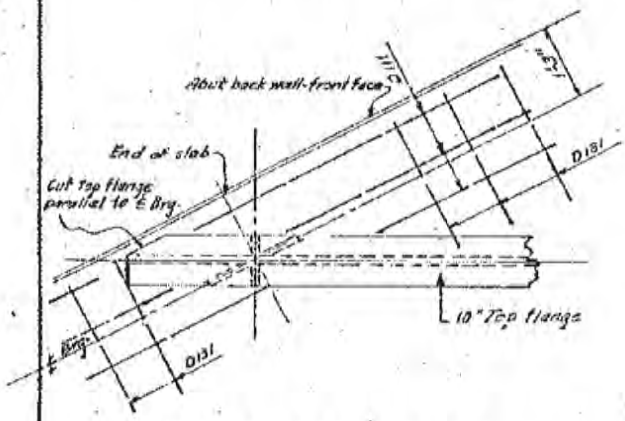


DETAIL - BEAM & SLAB AT ABUT.

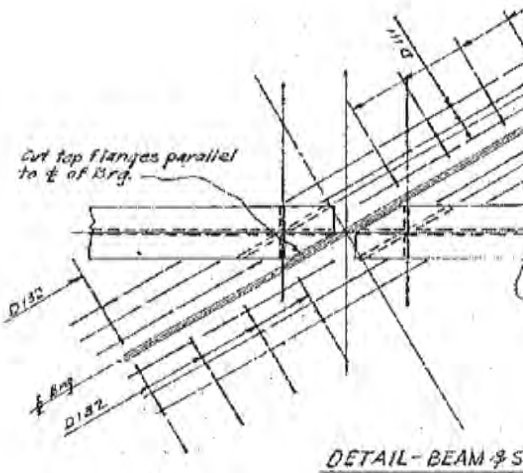


DETAIL - BEAM & S

**FOR INFORMATION ONLY**

DGN: Files TP PwPlot=11572X4433.C-343-26.TemplFoot.dgn
02-MAY-2008

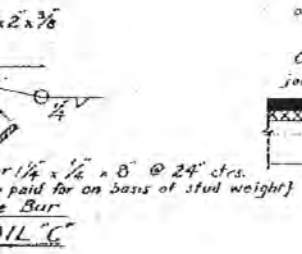


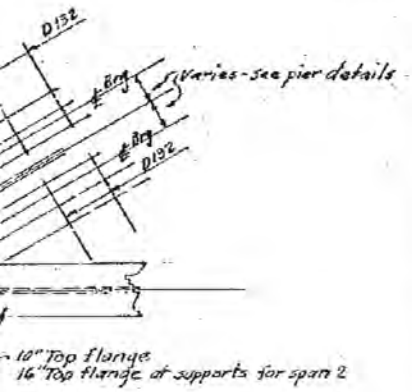


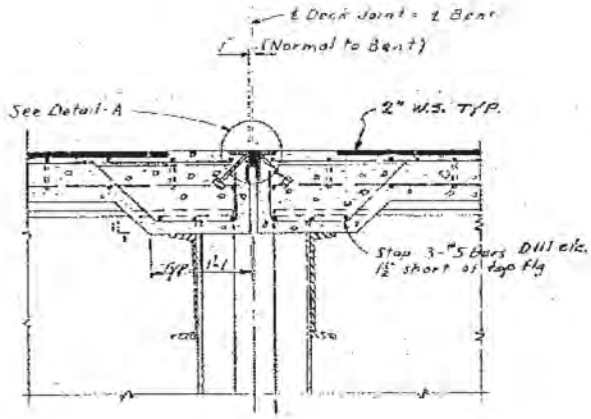


SECTION AT BENT
EXPANSION BEARING
(Norm to pier)

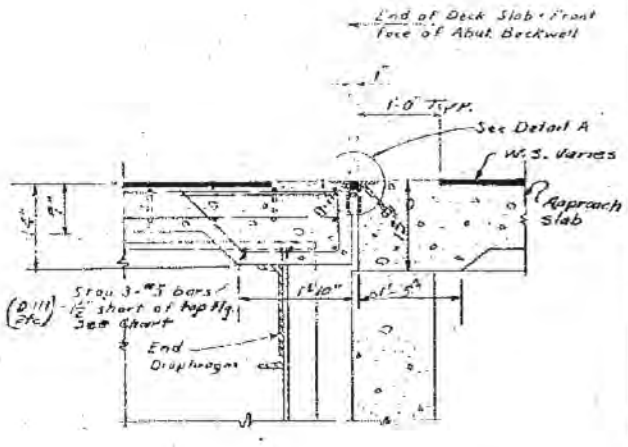


SECTION AT ABUTMENT
EXPANSION BEARING
(Normal to Backwall)

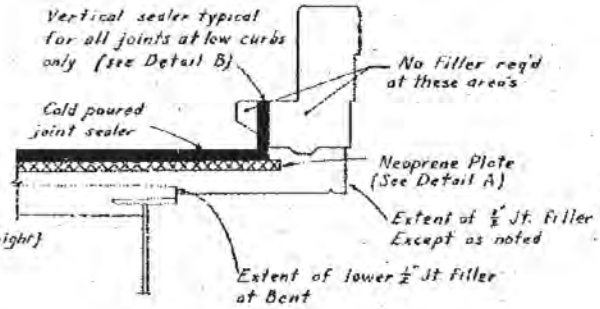


SECTION AT JOINT

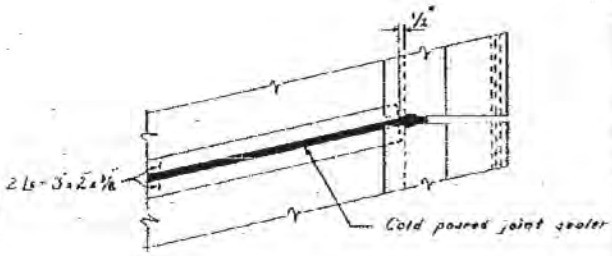


PLAN AT JOINT
(Typical Both Curbs)

CHART

| LOCATION END BARS & STIRRUPS | | | | |
|---|---|---|---|---|
| SPAN | END BARS | STIRRUPS D131 | STIRRUPS D132 | LOCATION |
| 1 N | 15-D111 | 70 | — | Abut 1 |
| 1 S | 9-D111 6-D112 | | 71 | Pier 1 |
| 2 N | 15-D113 | | 73 | |
| 2 S | 9-D113 6-D114 | | 71 | Pier 2 |
| 3 N | 15-D115 | | 70 | |
| 3 S | 9-D115 6-D116 | | 66 | Pier 3 |
| 4 N | 15-D117 | | 65 | |
| 4 S | 9-D117 6-D118 | | 63 | Pier 4 |
| 5 N | 15-D119 | | 60 | |
| 5 S | 9-D119 6-D120 | 55 | — | Abut 2 |
| 6 N | 15-D121 | 80 | — | Abut 3 |
| 6 S | 9-D121 6-D122 | | 76 | Pier 5 |
| 7 N | 15-D123 | | 83 | |
| 7 S | 9-D123 6-D124 | | 76 | Pier 6 |
| 8 N | 15-D125 | | 75 | |
| 8 S | 9-D125 6-D126 | | 71 | Pier 7 |
| 9 N | 15-D127 | | 70 | |
| 9 S | 9-D127 6-D128 | | 66 | Pier 8 |
| 10 N | 15-D129 | | 65 | |
| 10 S | 9-D129 6-D130 | 59 | — | Abut 4 |

IG-15-6(20)271 2nd Contr.
I-15-6(19)276 3rd Contr.

UTAH STATE DEPARTMENT OF HIGHWAYS
SALT LAKE CITY, UTAH
STRUCTURES DIVISION

LEHI - PROVO
EAST LEHI UP & US 91 OVERPASS
CONCRETE DETAILS

| | | |
|---|---|---|
| DESIGNED BY | CHECKED BY | |
| DRAWN BY FRA | CHECKED BY | PROJECT NO. |
| QUANTITIES BY | CHECKED BY | 143+83.66 |
| APPROVED BY | GROUP LEADER | STATION |
| RECOMMENDED BY | | UTAH |
| APPROVED | | COUNTY |
| | | DWG NO. C-343 — 26 of 51 |

REVISIONS

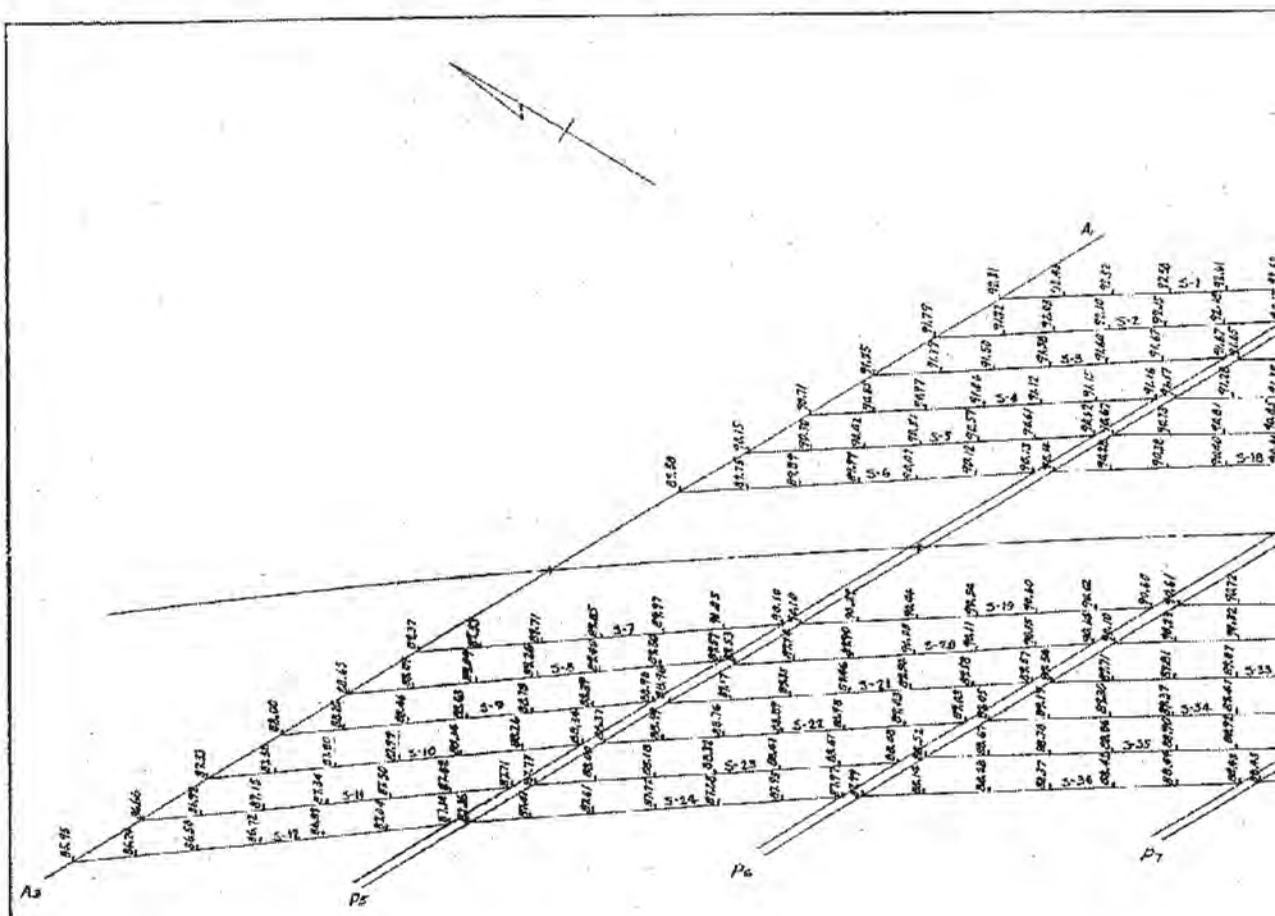


For layout dimens
framing plan she

DGN File: 18_PWPhase1\6721\4433.C-343-27_ForunFoundation
02-MAY-2006

**FOR INFORMATION ONLY**

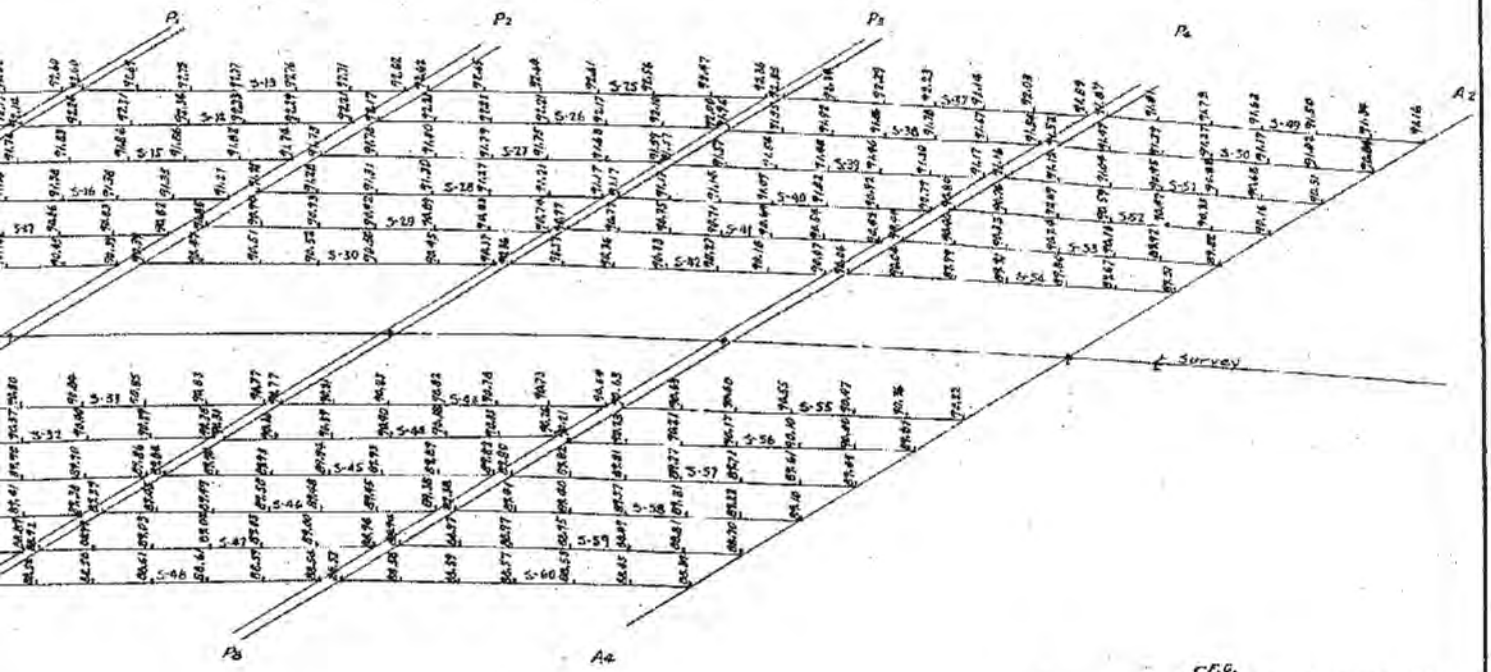


ions see
et 21

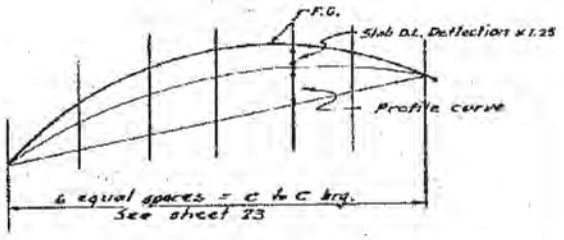


NOTE:
Elevations shown are finish grade plus 1.25 times slab dead load deflection on ℄ of beam.

IG-15-6(20) 277 2nd Contr.
I-15-6(19) 276 3rd Contr.

UTAH STATE DEPARTMENT OF HIGHWAYS
SALT LAKE CITY, UTAH
STRUCTURES DIVISION

LEHI - PROVO
EAST LEHI UP & US 91 OVERPASS
SCREED ELEVATIONS

| | | |
|---|---|---|
| DESIGNED BY | CHECKED BY LZW | |
| DRAWN BY GEW | CHECKED BY | PROJECT NUMBER |
| QUANTITIES BY | CHECKED BY | 143+ 69.44 STATION |
| APPROVED RECOMMENDED BY | GROUP LEADER | |
| APPROVED June 11, 1963 DATE | D.L. Sumsuite DIVISION STRUCTURES ENGINEER | UTAH COUNTY |
| DR. NO. | DRG. NO. C-343 | 27 OF 31 |

| NO. | BY | DATE | REMARKS |
|---|---|---|---|

REVISIONS

# BILL OF REINFORCING

| MARK | SIZE | LGTH. | NO. REQ. | TOTAL LENGTH | TYPE | A | B | C | D | E | F | G | H | J | K | O |
|---|---|---|---|---|---|---|---|---|---|---|---|---|---|---|---|---|
| **ABUTMENTS** | | | | | | | | | | | | | | | | |
| AF-1 | 5 | 6'6" | 993 | 6454'6" | 1 | | | | | | | | | | | |
| 2 | 5 | 26'6" | 20 | 530'0" | | | | | | | | | | | | |
| 3 | 5 | 20'9" | 22 | 456'6" | | | | | | | | | | | | |
| 4 | 6 | 6'6" | 362 | 2353'0" | | | | | | | | | | | | |
| 5 | 5 | 7'6" | 58 | 435'0" | | | | | | | | | | | | |
| 6 | | 37'4" | 20 | 746'8" | | | | | | | | | | | | |
| 7 | | 27'0" | 2 | 54'0" | | | | | | | | | | | | |
| 8 | | 30'0" | 2 | 60'0" | | | | | | | | | | | | |
| 9 | | 33'0" | 2 | 66'0" | | | | | | | | | | | | |
| 10 | | 35'0" | 2 | 70'0" | | | | | | | | | | | | |
| 11 | | 38'0" | 2 | 76'0" | | | | | | | | | | | | |
| 12 | | 26'6" | 10 | 265'0" | | | | | | | | | | | | |
| 13 | | 30'8" | 40 | 1226'8" | | | | | | | | | | | | |
| 14 | | 29'6" | 10 | 295'0" | | | | | | | | | | | | |
| 15 | | 30'6" | 30 | 915'0" | | | | | | | | | | | | |
| 16 | | 13'4" | 10 | 133'4" | | | | | | | | | | | | |
| 17 | | 31'8" | 20 | 633'4" | | | | | | | | | | | | |
| 18 | | 24'0" | 2 | 48'0" | | | | | | | | | | | | |
| 19 | | 26'9" | 2 | 53'6" | | | | | | | | | | | | |
| 20 | | 28'9" | 2 | 57'6" | | | | | | | | | | | | |
| 21 | | 31'3" | 2 | 62'6" | | | | | | | | | | | | |
| 22 | 5 | 32'6" | 2 | 65'0" | 1 | | | | | | | | | | | |
| AD-1 | 8 | 5'10" | 164 | 956'8" | 4 | | 14" | 4'8" | | | | | | | | |
| 2 | 5 | 2'9" | 555 | 1526'3" | 1 | | | | | | | | | | | |
| 3 | 5 | 4'0" | 384 | 1536'0" | 4 | | 2'0" | 2'0" | | | | | | | | |
| 4 | 7 | 5'8" | 39 | 221'0" | | | 12" | 4'8" | | | | | | | | |
| 5 | 5 | 5'5" | 278 | 1505'10" | | | 9" | 4'8" | | | | | | | | |
| 6 | 7 | 6'2" | 70 | 431'8" | | | 12" | 5'2" | | | | | | | | |
| 7 | 6 | 6'0" | 54 | 324'0" | | | 10" | 5'2" | | | | | | | | |
| 8 | 6 | 5'6" | 134 | 737'0" | | | 10" | 4'8" | | | | | | | | |
| 9 | 9 | 7'1" | 26 | 184'2" | | | 15" | 5'10" | | | | | | | | |
| 10 | 7 | 6'2" | 54 | 333'0" | | | 12" | 5'2" | | | | | | | | |
| 11 | 5 | 5'0" | 65 | 325'0" | 4 | | 9" | 4'3" | | | | | | | | |
| AS-1 | 5 | 13'1" | 5 | 65'5" | 1 | | | | | | | | | | | |
| 2 | | 12'6" | 29 | 362'6" | | | | | | | | | | | | |
| 3 | | 13'4" | 25 | 333'4" | | | | | | | | | | | | |
| 4 | | 14'3" | 19 | 270'9" | | | | | | | | | | | | |
| 5 | 5 | 15'6" | 2 | 31'0" | | | | | | | | | | | | |
| 6 | 6 | 11'1" | 13 | 144'1" | | | | | | | | | | | | |
| 7 | | 11'7" | 25 | 289'7" | | | | | | | | | | | | |
| 8 | | 12'1" | 24 | 290'0" | | | | | | | | | | | | |
| 9 | | 12'8" | 25 | 316'8" | | | | | | | | | | | | |
| 10 | | 13'3" | 36 | 477'0" | | | | | | | | | | | | |
| 11 | 6 | 14'0" | 41 | 574'0" | 1 | | | | | | | | | | | |
| 12 | 5 | 5'6" | 31 | 170'6" | 4 | | 1'9" | 3'9" | | | | | | | | |
| 13 | | 40'3" | 18 | 724'6" | 1 | | | | | | | | | | | |
| ~~14~~ | | ~~35'6"~~ | ~~2~~ | ~~71'0"~~ | ~~1~~ | | | | | | | | | | | |
| 15 | | 36'4" | 20 | 726'5" | 1 | | | | | | | | | | | |
| 16 | | 31'0" | 22 | 682'0" | 1 | | | | | | | | | | | |
| 17 | | 4'3" | 11 | 46'9" | 20 | | 2'3" | 15" | 9" | 13" | | | | | | |
| 18 | | 4'6" | 11 | 49'6" | 20 | | 9" | 3'0" | 9" | 4" | | | | | | |
| 19 | | 2'3" | 2 | 4'6" | 4 | | 9" | 18" | | | | | | | | |
| ~~20~~ | | ~~3'8"~~ | ~~257~~ | ~~942'4"~~ | ~~5~~ | | ~~2'3"~~ | ~~5"~~ | ~~12"~~ | | | | | | | |
| ~~21~~ | | ~~1'8"~~ | ~~256~~ | ~~426'8"~~ | ~~4~~ | | ~~9"~~ | ~~11"~~ | | | | | | | | |
| 22 | | 14'0" | 7 | 98'0" | 1 | | | | | | | | | | | |
| 23 | | 10'9" | 31 | 333'3" | | | | | | | | | | | | |
| 24 | | 10'3" | 45 | 461'3" | | | | | | | | | | | | |
| 25 | | 9'9" | 10 | 97'6" | | | | | | | | | | | | |
| 26 | | 9'3" | 19 | 175'9" | | | | | | | | | | | | |
| 27 | | 8'9" | 23 | 201'3" | | | | | | | | | | | | |
| 28 | | 8'4" | 13 | 108'4" | | | | | | | | | | | | |
| 29 | | 8'0" | 13 | 104'0" | | | | | | | | | | | | |
| 30 | | 7'3" | 9 | 65'3" | | | | | | | | | | | | |
| 31 | | 11'4" | 37 | 419'4" | | | | | | | | | | | | |
| 32 | | 9'7" | 63 | 603'9" | | | | | | | | | | | | |
| 33 | | 9'0" | 33 | 297'0" | | | | | | | | | | | | |
| 34 | | 8'3" | 13 | 107'3" | | | | | | | | | | | | |
| 35 | | 13'6" | 3 | 40'6" | | | | | | | | | | | | |
| 36 | | 14'9" | 2 | 29'6" | | | | | | | | | | | | |
| 37 | | 42'0" | 12 | 504'0" | | | | | | | | | | | | |
| 38 | | 37'6" | 2 | 75'0" | | | | | | | | | | | | |
| 39 | | 39'6" | 16 | 632'0" | | | | | | | | | | | | |
| 40 | | 30'0" | 34 | 1020'0" | | | | | | | | | | | | |
| 41 | | 35'0" | 8 | 280'0" | | | | | | | | | | | | |
| 42 | 5 | 38'6" | 8 | 308'0" | 1 | | | | | | | | | | | |

| MARK | SIZE | LGTH. | NO. REQ. | TOTAL LENGTH | TYPE | A | B | C | D | E |
|---|---|---|---|---|---|---|---|---|---|---|
| AS-43 | 5 | 5'0" | 2 | 10'0" | 1 | | | | | |
| 44 | | 2'0" | 14 | 28'0" | 1 | | | | | |
| 45 | | 7'0" | 10 | 70'0" | 4 | | 2'0" | 5'0" | | |
| 46 | | 3'6" | 3 | 10'6" | 1 | | | | | |
| 47 | 5 | 2'0" | 10 | 20'0" | 4 | | 9" | 15" | | |
| 48 | 6 | 10'7" | 8 | 86'0" | 1 | | | | | |
| 49 | | 10'7" | 12 | 127'0" | | | | | | |
| 50 | | 10'4" | 13 | 134'4" | | | | | | |
| 51 | | 10'0" | 11 | 110'0" | | | | | | |
| 52 | | 9'8" | 11 | 106'4" | | | | | | |
| 53 | 6 | 9'4" | 10 | 93'4" | | | | | | |
| 54 | 5 | 12'3" | 6 | 73'6" | | | | | | |
| 55 | | 11'1" | 22 | 243'10" | | | | | | |
| 56 | | 10'6" | 21 | 220'6" | | | | | | |
| 57 | | 9'11" | 16 | 158'8" | | | | | | |
| 58 | | 27'6" | 2 | 55'0" | | | | | | |
| 59 | | 28'9" | 7 | 200'9" | | | | | | |
| 60 | | 25'3" | 7 | 176'9" | | | | | | |
| 61 | | 21'6" | 2 | 43'0" | | | | | | |
| 62 | | 18" | 9 | 13'6" | | | | | | |
| 63 | | 4'0" | 2 | 8'0" | 1 | | | | | |
| 64 | | 5'9" | 8 | 46'0" | 4 | | 2'0" | 3'9" | | |
| 65 | | 2'9" | 4 | 11'0" | 1 | | | | | |
| 66 | | 8'1" | 16 | 129'4" | | | | | | |
| 67 | | 33'0" | 14 | 462'0" | | | | | | |
| 68 | | 28'6" | 2 | 57'0" | | | | | | |
| 69 | | 32'3" | 14 | 451'6" | | | | | | |
| 70 | | 23'9" | 14 | 332'6" | 1 | | | | | |
| 71 | | 4'6" | 6 | 27'0" | 20 | | 9" | 3'0" | 9" | 5" |
| 72 | | 4'7" | 6 | 27'6" | 20 | | 2'8" | 14" | 9" | 17" |
| 73 | | 6'4" | 4 | 25'4" | 5 | | 2'9" | 10" | 2'9" | |
| 74 | | 3'0" | 2 | 6'0" | 20 | | 18" | 2" | 16" | 10" |
| 75 | | 6'2" | 6 | 37'0" | 21 | | 2'9" | 8" | 2'9" | 4" |
| 76 | | 2'3" | 1 | 2'3" | 1 | | | | | |
| 77 | | 4'6" | 2 | 9'0" | 6 | | 3'3" | 15" | 8" | 13" |
| 78 | | 5'0" | 2 | 10'0" | 6 | | 4'3" | 9" | 4" | 8" |
| 79 | | 4'3" | 4 | 17'0" | 6 | | 3'0" | 15" | 8" | 13" |
| 80 | 5 | 4'6" | 4 | 18'0" | 6 | | 3'9" | 9" | 4" | 8" |
| AG-1 | 5 | 4'6" | 240 | 1080'0" | 5 | | 15" | 2'0" | 15" | |
| AP-1 | 5 | 9'0" | 7 | 63'0" | 1 | | | | | |
| 2 | | 8'6" | | 59'6" | | | | | | |
| 3 | | 8'0" | | 56'0" | | | | | | |
| 4 | | 7'5" | | 51'11" | | | | | | |
| 5 | | 6'10" | | 47'10" | | | | | | |
| 6 | | 6'3" | 7 | 43'9" | 1 | | | | | |
| 7 | | 10'6" | 89 | 934'6" | 13 | | 9" | 3'5" | 2'2" | 3'5" |
| 8 | | 6'0" | 7 | 42'0" | 1 | | | | | |
| 9 | | 5'4" | | 37'4" | | | | | | |
| 10 | | 4'9" | | 33'3" | | | | | | |
| 11 | | 4'0" | | 28'0" | | | | | | |
| 12 | | 3'4" | | 23'4" | | | | | | |
| 13 | | 2'6" | | 17'6" | | | | | | |
| 14 | | 5'10" | | 40'10" | | | | | | |
| 15 | | 5'6" | | 38'6" | | | | | | |
| 16 | | 5'2" | 7 | 36'2" | | | | | | |
| 17 | | 4'10" | 14 | 67'8" | | | | | | |
| 18 | | 4'6" | 14 | 63'0" | | | | | | |
| 19 | | 4'2" | 14 | 58'4" | | | | | | |
| 20 | | 3'10" | 7 | 26'10" | | | | | | |
| 21 | | 3'5" | 7 | 23'11" | | | | | | |
| 22 | 5 | 3'0" | 7 | 21'0" | 1 | | | | | |
| AW-1 | 7 | 14'8" | 19 | 278'8" | 1 | | | | | |
| 2 | 7 | 14'6" | 16 | 232'0" | | | | | | |
| 3 | 5 | 15'0" | 19 | 285'0" | | | | | | |
| 4 | 5 | 14'9" | 16 | 236'0" | | | | | | |
| 5 | 5 | 28'0" | 22 | 616'0" | | | | | | |
| 6 | 5 | 23'4" | 22 | 513'4" | | | | | | |
| 7 | 6 | 12'3" | 15 | 183'9" | | | | | | |
| 8 | 6 | 12'8" | 13 | 164'8" | | | | | | |
| 9 | 5 | 12'10" | 15 | 192'6" | | | | | | |
| 10 | | 13'4" | 13 | 173'4" | | | | | | |
| 11 | | 21'6" | 20 | 430'0" | | | | | | |
| 12 | | 18'4" | 20 | 366'8" | | | | | | |
| 13 | 5 | 16'0" | 8 | 128'0" | | | | | | |
| 14 | 4 | 22'3" | 7 | 155'9" | | | | | | |
| 15 | 5 | 16'8" | 11 | 183'4" | | | | | | |
| 16 | 5 | 5'4" | 6 | 32'0" | 1 | | | | | |

DGN: F:\Jobs\Pierdine\1672\1443-C-345-28_Foundation
03-MAY-2006

STEEL

| MARK | SIZE | LGTH. | NO. REQ. | TOTAL LENGTH | TYPE | A | B | C | D | E | F | G | H | J | K | O |
|---|---|---|---|---|---|---|---|---|---|---|---|---|---|---|---|---|
| A17-17 | 5 | 4'5" | 6 | 26'6" | 1 | | | | | | | | | | | |
| 18 | | 3'7" | 6 | 21'6" | | | | | | | | | | | | |
| 19 | | 2'8" | 6 | 16'0" | | | | | | | | | | | | |
| 20 | | 20'3" | 1 | 20'3" | | | | | | | | | | | | |
| 21 | | 19'0" | 1 | 19'0" | | | | | | | | | | | | |
| 22 | | 21'3" | 1 | 21'3" | | | | | | | | | | | | |
| 23 | 5 | 14'3" | 8 | 114'0" | | | | | | | | | | | | |
| 24 | 9 | 16'6" | 13 | 214'6" | | | | | | | | | | | | |
| 25 | 5 | 8'0" | 12 | 96'0" | | | | | | | | | | | | |
| 26 | 5 | 18'9" | 1 | 18'9" | | | | | | | | | | | | |
| 27 | 5 | 16'3" | 1 | 16'3" | | | | | | | | | | | | |
| 28 | 4 | 35'3" | 7 | 246'9" | | | | | | | | | | | | |
| 29 | 5 | 33'6" | 1 | 33'6" | | | | | | | | | | | | |
| 30 | 5 | 30'9" | 1 | 30'9" | | | | | | | | | | | | |
| 31 | 5 | 29'3" | 4 | 117'0" | | | | | | | | | | | | |
| 32 | 5 | 9'8" | 72 | 696'0" | | | | | | | | | | | | |
| 33 | 4 | 35'8" | 7 | 249'8" | | | | | | | | | | | | |
| 34 | 5 | 34'0" | 1 | 34'0" | | | | | | | | | | | | |
| 35 | | 31'3" | 1 | 31'3" | | | | | | | | | | | | |
| 36 | | 29'8" | 6 | 178'0" | | | | | | | | | | | | |
| 37 | | 13'3" | 21 | 278'3" | | | | | | | | | | | | |
| 38 | | 33'3" | 1 | 33'3" | | | | | | | | | | | | |
| 39 | | 32'0" | 1 | 32'0" | | | | | | | | | | | | |
| 40 | | 27'3" | 3 | 81'9" | | | | | | | | | | | | |
| 41 | | 33'8" | 1 | 33'8" | | | | | | | | | | | | |
| 42 | | 32'5" | 1 | 32'5" | | | | | | | | | | | | |
| 43 | 5 | 27'8" | 5 | 138'4" | | | | | | | | | | | | |
| 44 | 7 | 13'3" | 54 | 715'6" | | | | | | | | | | | | |
| 45 | 5 | 8'6" | 6 | 51'0" | | | | | | | | | | | | |
| 46 | | 10'2" | 20 | 203'4" | | | | | | | | | | | | |
| 47 | | 10'0" | 6 | 60'0" | 1 | | | | | | | | | | | |
| 48 | | 6'2" | 73 | 450'2" | 21 | | 2'9" | 8" | 2'9" | 4" | | | | | | |
| 49 | | 3'0" | 85 | 255'0" | 20 | | 18" | 2" | 16" | 10" | | | | | | |
| 50 | | 5'0" | 4 | 20'0" | 5 | | 2'4" | 4" | 2'4" | | | | | | | |
| 51 | | 5'8" | 4 | 22'8" | 5 | | 2'7" | 6" | 2'7" | | | | | | | |
| 52 | 5 | 6'1" | 4 | 24'4" | 5 | | 2'9" | 7" | 2'9" | | | | | | | |
| 53 | 4 | 22'0" | 2 | 44'0" | 6 | | 19'6" | 2'6" | 6" | 2'5" | | | | | | |
| 54 | 4 | 10'0" | 2 | 20'0" | 6 | | 7'6" | 2'6" | 6" | 2'5" | | | | | | |
| 55 | 4 | 35'0" | 2 | 70'0" | 6 | | 32'6" | 2'6" | 6" | 2'5" | | | | | | |
| 56 | 4 | 35'4" | 2 | 70'8" | 6 | | 32'0" | 2'6" | 6" | 2'5" | | | | | | |
| 57 | 5 | 35'3" | 1 | 35'3" | 1 | | | | | | | | | | | |
| 58 | 5 | 35'8" | 1 | 35'8" | 1 | | | | | | | | | | | |
| 59 | 5 | 22'3" | 1 | 22'3" | 1 | | | | | | | | | | | |
| 60 | 4 | 10'0" | 7 | 70'0" | 1 | | | | | | | | | | | |

UT UTAH

BAR TYPES

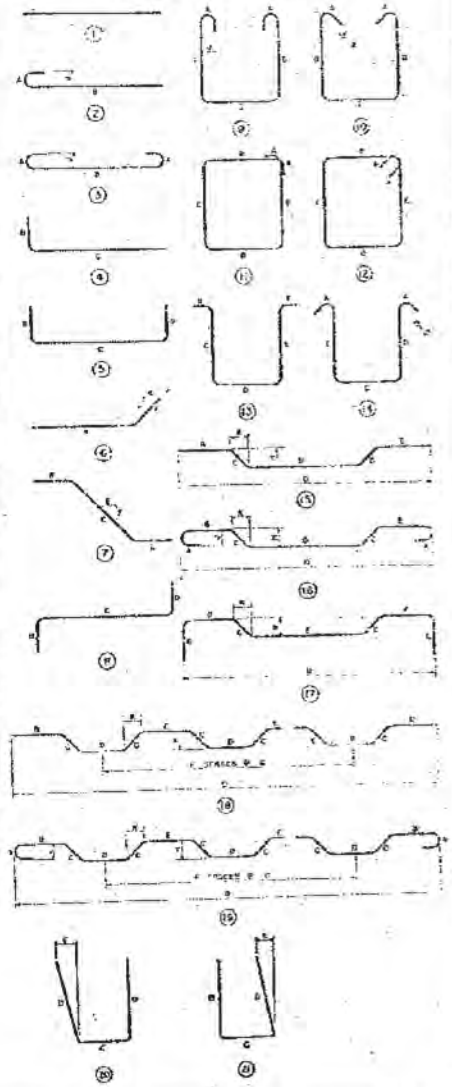

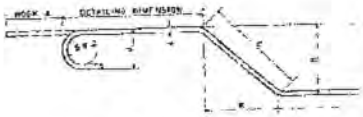

HOOK DETAIL

**FOR INFORMATION ONLY**

REINFORCING SCHEDULE

GENERAL NOTES

1. All placing drawings, detailing, and fabrication shall be in accordance with the "Manual of Standard Practice for Detailing Reinforced Concrete Structures (ACI 315-57)".
2. All dimensions shown for bar bending details are out-to-out of bars.

IG-15-6(20) 277 2nd contr.
I-15-6(19) 276 3rd Contr.

DESIGN AND DRAWING BY
WESTERN ENGINEERS, INC. AND
EDWARDS AND KELCEY
CONSULTING ENGINEERS

SHEET 28 OF 31 SHEETS

UTAH STATE ROAD COMMISSION
SALT LAKE CITY, UTAH
BRIDGE DEPARTMENT

EAST LEHI U.P. & U.S. 91 OVERPASS
445'-3" O. TO O. HOR. CURVE
STA. 143+89.44
LEHI PROVO UTAH COUNTY

DESIGNED BY
DRAWN BY
TRACED BY
CHECKED BY
SCALE
DATE
APPROVED
CHIEF BRIDGE ENGINEER
NO.
DWG. NO. C-343

STRUCTURE 1-5

# BILL OF REINFORCING

| MARK | SIZE | LGTH. | NO. REQ. | TOTAL LENGTH | TYPE | A | B | C | D | E | F | G | H | I | J | O |
|---|---|---|---|---|---|---|---|---|---|---|---|---|---|---|---|---|
| **PIERS** | | | | | | | | | | | | | | | | |
| PF-1 | 11 | 37'-0" | 60 | 2220'-0" | 1 | | | | | | | | | | | |
| 2 | 6 | 7'-6" | 592 | 4440'-0" | | | | | | | | | | | | |
| 3 | 8 | 7'-6" | 592 | 4440'-0" | | | | | | | | | | | | |
| 4 | 11 | 40'-0" | 30 | 1200'-0" | | | | | | | | | | | | |
| 5 | | 35'-6" | 60 | 2130'-0" | | | | | | | | | | | | |
| 6 | | 38'-6" | 30 | 1155'-0" | | | | | | | | | | | | |
| 7 | | 34'-0" | 30 | 1020'-0" | | | | | | | | | | | | |
| 8 | | 32'-6" | 30 | 975'-0" | | | | | | | | | | | | |
| 9 | 11 | 27'-0" | 96 | 2592'-0" | 1 | | | | | | | | | | | |
| PD-1 | 9 | 7'-3" | 640 | 4640'-0" | 4 | | 12" | 6'-3" | | | | | | | | |
| PC-1 | 9 | 29'-6" | 40 | 1180'-0" | 1 | | | | | | | | | | | |
| 2 | | 30'-0" | 40 | 1200'-0" | | | | | | | | | | | | |
| 3 | | 28'-0" | 100 | 2800'-0" | | | | | | | | | | | | |
| 4 | | 28'-6" | 60 | 1710'-0" | | | | | | | | | | | | |
| 5 | | 26'-9" | 60 | 1605'-0" | | | | | | | | | | | | |
| 6 | | 27'-5" | 20 | 548'-4" | | | | | | | | | | | | |
| 7 | | 25'-0" | | 500'-0" | | | | | | | | | | | | |
| 8 | | 25'-8" | | 513'-4" | | | | | | | | | | | | |
| 9 | | 27'-2" | | 543'-4" | | | | | | | | | | | | |
| 10 | | 25'-6" | 20 | 510'-0" | | | | | | | | | | | | |
| 11 | | 26'-3" | 60 | 1575'-0" | | | | | | | | | | | | |
| 12 | | 29'-3" | 40 | 1170'-0" | | | | | | | | | | | | |
| 13 | | 29'-8" | 20 | 593'-4" | | | | | | | | | | | | |
| 14 | | 27'-8" | 40 | 1108'-8" | | | | | | | | | | | | |
| 15 | | 27'-10" | 20 | 556'-8" | | | | | | | | | | | | |
| 16 | | 28'-3" | 40 | 1130'-0" | | | | | | | | | | | | |
| 17 | 9 | 28'-11" | 20 | 578'-4" | 1 | | | | | | | | | | | |
| PB-1 | 11 | 21'-0" | 32 | 672'-0" | 1 | | | | | | | | | | | |
| 2 | 11 | 14'-6" | 32 | 464'-0" | 1 | | | | | | | | | | | |
| 3 | 5 | 21'-0" | 16 | 336'-0" | 1 | | | | | | | | | | | |
| 4 | 9 | 26'-0" | 22 | 572'-0" | 1 | | | | | | | | | | | |
| 5 | 8 | 11'-10" | 20 | 236'-8" | 22 | 1'-0" | 1'-9" | 7'-1" | 2'-0" | | | | 1'-6" | | | |
| 6 | 11 | 22'-5" | 32 | 720'-0" | | | | | | | | | | | | |
| 7 | 11 | 15'-0" | 64 | 960'-0" | 1 | | | | | | | | | | | |
| 8 | 5 | 22'-6" | 16 | 360'-0" | 1 | | | | | | | | | | | |
| 9 | 9 | 28'-0" | 22 | 616'-0" | 1 | | | | | | | | | | | |
| 10 | 8 | 12'-5" | 40 | 496'-8" | 22 | 1'-0" | 1'-9" | 7'-8" | 2'-0" | | | | 1'-6" | | | |
| 11 | 11 | 20'-3" | 32 | 480'-0" | 1 | | | | | | | | | | | |
| 12 | 11 | 14'-3" | 64 | 912'-0" | 1 | | | | | | | | | | | |
| 13 | 5 | 20'-3" | 16 | 324'-0" | 1 | | | | | | | | | | | |
| 14 | 9 | 25'-0" | 22 | 550'-0" | 1 | | | | | | | | | | | |
| 15 | 8 | 11'-8" | 40 | 466'-8" | 22 | 1'-0" | 1'-9" | 6'-11" | 2'-0" | | | | 1'-6" | | | |
| 16 | 11 | 22'-0" | 32 | 704'-0" | 1 | | | | | | | | | | | |
| 17 | 5 | 22'-0" | 16 | 352'-0" | | | | | | | | | | | | |
| 18 | 9 | 27'-0" | 22 | 594'-0" | | | | | | | | | | | | |
| 19 | 11 | 19'-6" | 32 | 624'-0" | | | | | | | | | | | | |
| 20 | 11 | 14'-0" | 32 | 448'-0" | | | | | | | | | | | | |
| 21 | 5 | 19'-6" | 16 | 312'-0" | | | | | | | | | | | | |
| 22 | 9 | 24'-0" | 22 | 528'-0" | | | | | | | | | | | | |
| 23 | 11 | 20'-9" | 32 | 664'-0" | | | | | | | | | | | | |
| 24 | 5 | 20'-9" | 16 | 332'-0" | | | | | | | | | | | | |
| 25 | 9 | 25'-6" | 22 | 561'-0" | | | | | | | | | | | | |
| 26 | 11 | 19'-3" | 32 | 616'-0" | | | | | | | | | | | | |
| 27 | 11 | 14'-0" | 32 | 448'-0" | | | | | | | | | | | | |
| 28 | 5 | 19'-3" | 16 | 308'-0" | | | | | | | | | | | | |
| 29 | 9 | 23'-6" | 22 | 517'-0" | 1 | | | | | | | | | | | |
| 30 | 8 | 11'-3" | 20 | 225'-0" | 22 | 1'-0" | 1'-9" | 6'-6" | 2'-0" | | | | 1'-6" | | | |
| 31 | 11 | 20'-0" | 32 | 640'-0" | 1 | | | | | | | | | | | |
| 32 | 11 | 14'-0" | 32 | 448'-0" | 1 | | | | | | | | | | | |
| 33 | 5 | 20'-0" | 16 | 320'-0" | 1 | | | | | | | | | | | |
| 34 | 9 | 24'-6" | 22 | 539'-0" | 1 | | | | | | | | | | | |
| 35 | 8 | 11'-6" | 20 | 230'-0" | 22 | 1'-0" | 1'-9" | 6'-9" | 2'-0" | | | | 1'-6" | | | |
| 36 | 8 | 11'-5" | 20 | 228'-4" | 22 | 1'-0" | 1'-9" | 6'-8" | 2'-0" | | | | 1'-6" | | | |
| PS-1 | 4 | 9'-0" | 1530 | 14535'-0" | 12 | 5" | 1'-8" | 2'-8" | 1'-8" | 2'-8" | | | | | | |
| 2 | 5 | 11'-9" | 596 | 7003'-0" | | | 1'-9½" | 3'-8" | 1'-9½" | 3'-8" | | | | | | |
| 3 | | 11'-5" | 64 | 730'-8" | | | | 3'-6" | | 3'-6" | | | | | | |
| 4 | | 11'-1" | | 709'-4" | | | | 3'-4" | | 3'-4" | | | | | | |
| 5 | | 10'-9" | | 688'-0" | | | | 3'-2" | | 3'-2" | | | | | | |
| 6 | | 10'-5" | | 666'-8" | | | | 3'-0" | | 3'-0" | | | | | | |
| 7 | | 10'-1" | | 645'-4" | | | | 2'-10" | | 2'-10" | | | | | | |
| 8 | | 9'-9" | | 624'-0" | | | | 2'-8" | | 2'-8" | | | | | | |
| 9 | | 9'-5" | | 602'-8" | | | | 2'-6" | | 2'-6" | | | | | | |
| 10 | | 9'-1" | 64 | 581'-4" | | | | 2'-4" | | 2'-4" | | | | | | |
| 11 | 5 | 9'-3" | 16 | 148'-0" | 12 | 5" | 1'-9½" | 2'-5" | 1'-9½" | 2'-5" | | | | | | |

| MARK | SIZE | LGTH. | NO. REQ. | TOTAL LENGTH | TYPE | A | B | C | D | E |
|---|---|---|---|---|---|---|---|---|---|---|
| **APPROACH SLABS** | | | | | | | | | | |
| S-1 | 7 | 14'-8" | 434 | 6365'-4" | 1 | | | | | |
| 2 | 5 | 14'-5" | 291 | 4268'-0" | | | | | | |
| 3 | 7 | 2'-0" | 8 | 16'-0" | | | | | | |
| 4 | | 2'-5" | 8 | 19'-4" | | | | | | |
| 5 | | 2'-9" | | 22'-0" | | | | | | |
| 6 | | 3'-2" | | 25'-4" | | | | | | |
| 7 | | 3'-6" | | 28'-0" | | | | | | |
| 8 | | 3'-11" | | 31'-4" | | | | | | |
| 9 | | 4'-3" | | 34'-0" | | | | | | |
| 10 | | 4'-8" | | 37'-4" | | | | | | |
| 11 | | 5'-0" | | 40'-0" | | | | | | |
| 12 | | 5'-5" | | 43'-4" | | | | | | |
| 13 | | 5'-10" | | 46'-8" | | | | | | |
| 14 | | 6'-2" | | 49'-4" | | | | | | |
| 15 | | 6'-7" | | 52'-8" | | | | | | |
| 16 | | 6'-11" | | 55'-4" | | | | | | |
| 17 | | 7'-4" | | 58'-8" | | | | | | |
| 18 | | 7'-8" | | 61'-4" | | | | | | |
| 19 | | 8'-1" | | 64'-8" | | | | | | |
| 20 | | 8'-6" | | 68'-0" | | | | | | |
| 21 | | 8'-10" | | 70'-8" | | | | | | |
| 22 | | 9'-2" | | 73'-4" | | | | | | |
| 23 | | 9'-7" | | 76'-8" | | | | | | |
| 24 | | 10'-0" | | 80'-0" | | | | | | |
| 25 | | 10'-4" | | 82'-8" | | | | | | |
| 26 | | 10'-9" | | 86'-0" | | | | | | |
| 27 | | 11'-1" | | 88'-8" | | | | | | |
| 28 | | 11'-6" | | 92'-0" | | | | | | |
| 29 | | 11'-11" | | 95'-4" | | | | | | |
| 30 | | 12'-3" | | 98'-0" | | | | | | |
| 31 | | 12'-7" | | 100'-8" | | | | | | |
| 32 | | 13'-0" | | 104'-0" | | | | | | |
| 33 | | 13'-5" | | 107'-4" | | | | | | |
| 34 | | 13'-9" | | 110'-0" | | | | | | |
| 35 | | 14'-2" | | 113'-4" | | | | | | |
| 36 | 7 | 14'-6" | | 116'-0" | | | | | | |
| 37 | 5 | 2'-0" | | 16'-0" | | | | | | |
| 38 | | 2'-7" | | 20'-8" | | | | | | |
| 39 | | 3'-2" | | 25'-4" | | | | | | |
| 40 | | 3'-9" | | 30'-0" | | | | | | |
| 41 | | 4'-4" | | 34'-8" | | | | | | |
| 42 | | 4'-11" | | 39'-4" | | | | | | |
| 43 | | 5'-6" | | 44'-0" | | | | | | |
| 44 | | 6'-1" | | 48'-8" | | | | | | |
| 45 | | 6'-8" | | 53'-4" | | | | | | |
| 46 | | 7'-3" | | 58'-0" | | | | | | |
| 47 | | 7'-10" | | 62'-8" | | | | | | |
| 48 | | 8'-4" | | 66'-8" | | | | | | |
| 49 | | 9'-0" | | 72'-0" | | | | | | |
| 50 | | 9'-7" | | 76'-8" | | | | | | |
| 51 | | 10'-1" | | 80'-8" | | | | | | |
| 52 | | 10'-6" | | 85'-4" | | | | | | |
| 53 | | 11'-3" | | 90'-0" | | | | | | |
| 54 | | 11'-10" | | 94'-8" | | | | | | |
| 55 | | 12'-5" | | 99'-4" | | | | | | |
| 56 | | 13'-0" | | 104'-0" | | | | | | |
| 57 | | 13'-7" | | 108'-8" | | | | | | |
| 58 | | 14'-2" | 8 | 113'-4" | | | | | | |
| 59 | | 35'-4" | 96 | 3392'-0" | | | | | | |
| 60 | | 29'-5" | 96 | 2832'-0" | | | | | | |
| 61 | | 38'-9" | 96 | 3720'-0" | | | | | | |
| 62 | 5 | 31'-0" | 96 | 2976'-0" | | | | | | |
| 63 | 8 | 31'-0" | 16 | 496'-0" | | | | | | |
| 64 | 8 | 25'-0" | 16 | 400'-0" | | | | | | |
| 65 | 8 | 36'-0" | 16 | 576'-0" | | | | | | |
| 66 | 8 | 27'-6" | 16 | 440'-0" | | | | | | |
| 67 | 5 | 31'-0" | 2 | 62'-0" | | | | | | |
| 68 | 5 | 25'-0" | 2 | 50'-0" | | | | | | |
| 69 | 5 | 36'-0" | 2 | 72'-0" | | | | | | |
| 70 | 5 | 27'-6" | 2 | 55'-0" | 1 | | | | | |
| 71 | 7 | 35'-8" | 9 | 321'-0" | 1 | | | | | |
| 72 | 7 | 29'-10" | 9 | 268'-6" | 1 | | | | | |
| 73 | 7 | 39'-1" | 9 | 351'-9" | 1 | | | | | |
| 74 | 7 | 31'-4" | 9 | 282'-0" | 1 | | | | | |
| 75 | 4 | 3'-0" | 384 | 1152'-0" | Stirrups | | | | | |

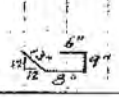


02-MAY-2005 DGN Files 1P, PlaNodes\16724\4433_C-043-29_TrownFoundat

STEEL

| F | G | H | J | K | O | MARK | SIZE | LGTH. | NO. REQ. | TOTAL LENGTH | TYPE | A | B | C | D | E | F | G | H | J | K | O |
|---|---|---|---|---|---|---|---|---|---|---|---|---|---|---|---|---|---|---|---|---|---|---|
| | | | | | | **BRIDGE PARAPET** | | | | | | | | | | | | | | | | |
| | | | | | | DC-1 | 5 | 8'-1½" | 1420 | 11,537'-6" | 24 | 8" | 2'-10½" | 2'-7" | 12" | 12" | | | | | | |
| | | | | | | 2 | 5 | 3'-1" | 1420 | 4378'-4" | 23 | 1'-4½" | 1'-8½" | | | | | | | | | |
| | | | | | | 3 | 4 | 27'-0" | 21 | 567'-0" | 1 | | | | | | | | | | | |
| | | | | | | 4 | 4 | 28'-0" | 42 | 1176'-0" | | | | | | | | | | | | |
| | | | | | | 5 | | 28'-6" | 84 | 2394'-0" | | | | | | | | | | | | |
| | | | | | | 6 | | 29'-6" | 42 | 1239'-0" | | | | | | | | | | | | |
| | | | | | | 7 | | 30'-0" | 63 | 1890'-0" | | | | | | | | | | | | |
| | | | | | | 8 | | 30'-6" | 84 | 2562'-0" | | | | | | | | | | | | |
| | | | | | | 9 | | 31'-6" | 21 | 661'-6" | | | | | | | | | | | | |
| | | | | | | 10 | | 32'-6" | 21 | 682'-6" | | | | | | | | | | | | |
| | | | | | | 11 | | 33'-0" | 21 | 693'-0" | | | | | | | | | | | | |
| | | | | | | 12 | 4 | 33'-6" | 21 | 703'-6" | 1 | | | | | | | | | | | |
| | | | | | | **PIERS CONT.** | | | | | | | | | | | | | | | | |
| | | | | | △ | PC-18 | 9 | 28'-0" | 20 | 560'-0" | 1 | | | | | | | | | | | |
| | | | | | △ | 19 | 9 | 28'-4" | 20 | 566'-8" | 1 | | | | | | | | | | | |
| | | | | | △ | 20 | 9 | 29'-0" | 20 | 580'-0" | 1 | | | | | | | | | | | |

UT UTAH

BAR TYPES

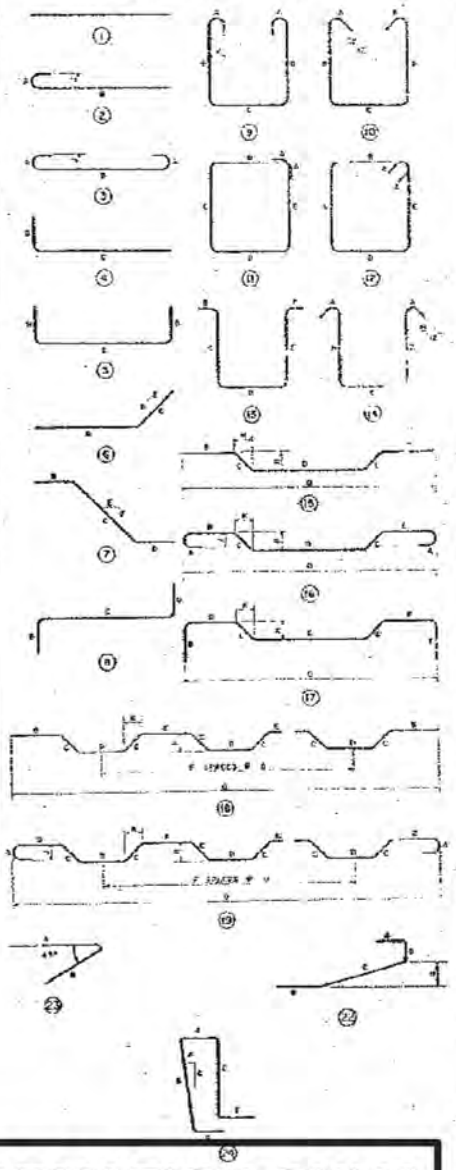

HOOK DETAIL

**FOR INFORMATION ONLY**

## REINFORCING SCHEDULE

GENERAL NOTES

1. All placing drawings, detailing, and fabrication shall be in accordance with the "Manual of Standard Practice for Detailing Reinforced Concrete Structures (ACI 315-57)".
2. All dimensions shown for bar bending details are out-to-out of bars.

△ H.N.S. 3-21-63 PC-18, 19 & 20 (PIERS)

IG-15-6(20) 277 2nd Contr.
I-15-6(19) 276 3rd Contr.

DESIGN AND DRAWING BY
WESTERN ENGINEERS, INC. AND
EDWARDS AND KELCEY
CONSULTING ENGINEERS

SUBMITTED BY: H. J. Schmal, CHIEF ENGINEER
UTAH ENGR. LIC. NO. 2-2-3

SHEET 29 OF 31

UTAH STATE ROAD COMMISSION
SALT LAKE CITY, UTAH
BRIDGE DEPARTMENT

EAST LEHI U.P. & U.S. 91 OVERPASS
445'-3" O. TO O. HOR. CURVE
STA. 143+89.44
LEHI PROVO UTAH COUNTY

DATE: June 11, 1963
APPROVED: N. L. Sargent
CHIEF ENGINEER ALTERNATE

DWG NO. C-343

STRUCTURE I-15

# BILL OF REINFORCING

| MARK | SIZE | LGTH. | NO. REQ. | TOTAL LENGTH | TYPE |
|---|---|---|---|---|---|
| SLAB | | | | | |
| D-1 | 6 | 2'-0" | 34 | 68'-0" | 1 |
| 2 | | 2'-4" | 34 | 79'-4" | |
| 3 | | 2'-8" | 34 | 90'-8" | |
| 4 | | 3'-0" | 39 | 117'-0" | |
| 5 | | 3'-4" | 42 | 140'-0" | |
| 6 | | 3'-8" | 42 | 154'-0" | |
| 7 | | 4'-0" | 42 | 168'-0" | |
| 8 | | 4'-4" | 44 | 190'-8" | |
| 9 | | 4'-8" | 44 | 205'-4" | |
| 10 | | 5'-0" | 66 | 330'-0" | |
| 11 | | 5'-4" | 66 | 352'-0" | |
| 12 | | 5'-8" | 66 | 374'-0" | |
| 13 | | 6'-0" | 67 | 402'-0" | |
| 14 | | 6'-4" | | 424'-4" | |
| 15 | | 6'-8" | | 446'-8" | |
| 16 | | 7'-0" | | 469'-0" | |
| 17 | | 7'-4" | 67 | 491'-4" | |
| 18 | | 7'-8" | 68 | 521'-4" | |
| 19 | | 8'-0" | | 544'-0" | |
| 20 | | 8'-4" | | 566'-8" | |
| 21 | | 8'-8" | | 589'-4" | |
| 22 | | 9'-0" | | 612'-0" | |
| 23 | | 9'-4" | | 634'-8" | |
| 24 | | 9'-8" | | 657'-4" | |
| 25 | | 10'-0" | | 680'-0" | |
| 26 | | 10'-4" | | 702'-8" | |
| 27 | | 10'-8" | | 725'-4" | |
| 28 | | 11'-0" | | 748'-0" | |
| 29 | | 11'-4" | | 770'-8" | |
| 30 | | 11'-8" | | 793'-4" | |
| 31 | | 12'-0" | | 816'-0" | |
| 32 | | 12'-4" | | 838'-8" | |
| 33 | | 12'-8" | | 861'-4" | |
| 34 | | 13'-0" | | 884'-0" | |
| 35 | | 13'-4" | | 906'-8" | |
| 36 | | 13'-8" | | 929'-4" | |
| 37 | | 14'-0" | | 952'-0" | |
| 38 | | 14'-4" | | 974'-8" | |
| 39 | | 14'-8" | | 997'-4" | |
| 40 | | 15'-0" | | 1020'-0" | |
| 41 | | 15'-4" | | 1042'-8" | |
| 42 | | 15'-8" | | 1065'-4" | |
| 43 | | 16'-0" | | 1088'-0" | |
| 44 | | 16'-4" | | 1110'-8" | |
| 45 | | 16'-8" | | 1133'-4" | |
| 46 | | 17'-0" | | 1156'-0" | |
| 47 | | 17'-4" | | 1178'-8" | |
| 48 | | 17'-8" | | 1201'-4" | |
| 49 | | 18'-0" | | 1224'-0" | |
| 50 | | 18'-4" | | 1246'-8" | |
| 51 | | 18'-8" | | 1269'-4" | |
| 52 | | 19'-0" | | 1292'-0" | |
| 53 | | 19'-4" | | 1314'-8" | |
| 54 | | 19'-8" | 68 | 1337'-4" | |
| 55 | | 20'-0" | 61 | 1220'-0" | |
| 56 | | 20'-4" | 61 | 1240'-4" | |
| 57 | | 20'-8" | 61 | 1260'-8" | |
| 58 | | 21'-0" | 60 | 1260'-0" | |
| 59 | | 21'-4" | 60 | 1280'-0" | |
| 60 | | 21'-8" | 876 | 18,960'-0" | |
| 61 | | 22'-0" | 52 | 1144'-0" | |
| 62 | | 22'-4" | | 1161'-4" | |
| 63 | | 22'-8" | | 1178'-8" | |
| 64 | | 23'-0" | | 1196'-0" | |
| 65 | | 23'-4" | | 1213'-4" | |
| 66 | | 23'-8" | | 1230'-8" | |
| 67 | | 24'-0" | | 1248'-0" | |
| 68 | | 24'-4" | 52 | 1265'-4" | |
| 69 | | 24'-8" | 41 | 1011'-4" | |
| 70 | | 25'-0" | 41 | 1025'-0" | |
| 71 | | 25'-4" | 36 | 912'-0" | |
| 72 | | 25'-8" | 36 | 924'-0" | |
| 73 | | 26'-0" | 36 | 936'-0" | |
| 74 | | 26'-4" | ~~863~~ 861 | 41,169'-0" | 41,949' |
| 75 | | 26'-8" | 18 | 480'-0" | |
| 76 | | 27'-0" | 18 | 486'-0" | |
| 77 | | 27'-4" | 19 | 519'-4" | |
| 78 | | 27'-8" | 19 | 525'-8" | |
| 79 | 6 | 28'-0" | 19 | 532'-0" | 1 |

| MARK | SIZE | LGTH. | NO. REQ. | TOTAL LENGTH | TYPE |
|---|---|---|---|---|---|
| D80 | CONTINUED IN NEXT COLUMN | | | | |
| D111 | 5 | 16'-6 | 24 | 396'-0 | 1 |
| 112 | | 14'-5 | 6 | 86'-6 | |
| 113 | | 14'-8 | 24 | 352'-0 | |
| 114 | | 12'-8 | 6 | 76'-0 | |
| 115 | | 14'-11 | 24 | 358'-0 | |
| 116 | | 13'-2 | 6 | 79'-0 | |
| 117 | | 14'-2 | 24 | 340'-0 | |
| 118 | | 12'-9 | 6 | 76'-6 | |
| 119 | | 13'-7 | 24 | 326'-0 | |
| 120 | | 12'-3 | 6 | 73'-6 | |
| 121 | | 18'-3 | 24 | 438'-0 | |
| 122 | | 15'-8 | 6 | 94'-0 | |
| 123 | | 16'-2 | 24 | 388'-0 | |
| 124 | | 14'-8 | 6 | 88'-0 | |
| 125 | | 16'-2 | 24 | 388'-0 | |
| 126 | | 13'-10 | 6 | 83'-0 | |
| 127 | | 15'-3 | 24 | 366'-0 | |
| 128 | | 13'-5 | 6 | 80'-6 | |
| 129 | | 14'-6 | 24 | 348'-0 | |
| 130 | 5 | 12'-10 | 6 | 77'-0 | 1 |
| 131 | 6 | 5'-7 | 263 | 1468'-5 | Sketch |
| D132 | 4 | 4'-1 | 1140 | 4655'-0 | Sketch |

| MARK | SIZE | LGTH. | NO. REQ. | TOTAL LENGTH | TYPE | A | B | C | D | E |
|---|---|---|---|---|---|---|---|---|---|---|
| 80 | 6 | 28'-4" | 19 | 538'-4" | 1 | | | | | |
| 81 | | 28'-6" | 19 | 541'-8" | | | | | | |
| 82 | | 29'-0" | 19 | 551'-0" | | | | | | |
| 83 | | 29'-4" | 19 | 557'-4" | | | | | | |
| 84 | | 29'-8" | 11 | 326'-4" | | | | | | |
| 85 | | 30'-0" | 11 | 330'-0" | | | | | | |
| 86 | | 30'-4" | 11 | 333'-8" | | | | | | |
| 87 | | 30'-8" | 11 | 337'-4" | | | | | | |
| 88 | | 31'-0" | ~~514~~ 519 | ~~15,934'-0"~~ 16,089 | 1 | | | | | |
| ~~89~~ | ~~6~~ | ~~1'-0~~ | ~~1360~~ | ~~[illegible]~~ | ~~1~~ | ~~[illegible]~~ | | | | |
| 90 | 5 | 30'-6" | 267 | 8135'-0" | 1 | | | | | |
| 91 | | 30'-0" | | 8010'-0" | | | | | | |
| 92 | | 31'-0" | | 8277'-0" | | | | | | |
| 93 | | 28'-6" | | 7605'-6" | | | | | | |
| 94 | | 29'-0" | | 7743'-0" | | | | | | |
| 95 | | 33'-0" | | 8811'-0" | | | | | | |
| 96 | | 32'-6" | | 8677'-6" | | | | | | |
| 97 | | 33'-6" | | 8944'-6" | | | | | | |
| 98 | | 29'-6" | | 7876'-6" | | | | | | |
| 99 | 5 | 31'-6" | 267 | 8411'-6" | | | | | | |
| 100 | 6 | 36'-0" | 6 | 216'-0" | | | | | | |
| 101 | | 35'-0" | 12 | 420'-0" | | | | | | |
| 102 | | 36'-6" | 12 | 438'-0" | | | | | | |
| 103 | | 32'-0" | 12 | 384'-0" | | | | | | |
| 104 | | 31'-0" | 12 | 372'-0" | | | | | | |
| 105 | | 28'-0" | 6 | 168'-0" | | | | | | |
| 106 | | 38'-0" | 18 | 684'-0" | | | | | | |
| 107 | | 36'-0" | 12 | 432'-0" | | | | | | |
| 108 | | 34'-0" | 12 | 408'-0" | | | | | | |
| 109 | | 33'-0" | 12 | 396'-0" | | | | | | |
| D-110 | | 31'-0" | 6 | 186'-0" | | | | | | |
| E-1 | | 2'-0" | 5 | 10'-0" | | | | | | |
| 2 | | 2'-3" | | 11'-3" | | | | | | |
| 3 | | 2'-6" | | 12'-6" | | | | | | |
| 4 | | 2'-10" | | 14'-2" | | | | | | |
| 5 | | 3'-1" | 5 | 15'-5" | | | | | | |
| 6 | | 3'-4" | 6 | 20'-0" | | | | | | |
| 7 | | 3'-8" | 7 | 25'-8" | | | | | | |
| 8 | | 3'-11" | 7 | 27'-5" | | | | | | |
| 9 | | 4'-2" | 9 | 37'-6" | | | | | | |
| 10 | | 4'-6" | 9 | 40'-6" | | | | | | |
| 11 | | 4'-9" | 9 | 42'-9" | | | | | | |
| 12 | | 5'-0" | 12 | 60'-0" | | | | | | |
| 13 | | 5'-4" | | 64'-0" | | | | | | |
| 14 | | 5'-7" | | 67'-0" | | | | | | |
| 15 | | 5'-10" | | 70'-0" | | | | | | |
| 16 | | 6'-2" | | 74'-0" | | | | | | |
| 17 | | 6'-5" | | 77'-0" | | | | | | |
| 18 | | 6'-8" | | 80'-0" | | | | | | |
| 19 | | 7'-0" | | 84'-0" | | | | | | |
| 20 | | 7'-3" | | 87'-0" | | | | | | |
| 21 | | 7'-6" | | 90'-0" | | | | | | |
| 22 | | 7'-10" | | 94'-0" | | | | | | |
| 23 | | 8'-1" | | 97'-0" | | | | | | |
| 24 | | 8'-4" | | 100'-0" | | | | | | |
| 25 | | 8'-8" | | 104'-0" | | | | | | |
| 26 | | 9'-0" | | 108'-0" | | | | | | |
| 27 | | 9'-3" | | 111'-0" | | | | | | |
| 28 | | 9'-6" | | 114'-0" | | | | | | |
| 29 | | 9'-10" | | 118'-0" | | | | | | |
| 30 | | 10'-1" | | 121'-0" | | | | | | |
| 31 | | 10'-4" | | 124'-0" | | | | | | |
| 32 | | 10'-8" | | 128'-0" | | | | | | |
| 33 | | 10'-11" | | 131'-0" | | | | | | |
| 34 | | 11'-2" | | 134'-0" | | | | | | |
| 35 | | 11'-6" | | 138'-0" | | | | | | |
| 36 | | 11'-9" | | 141'-0" | | | | | | |
| 37 | | 12'-0" | | 144'-0" | | | | | | |
| 38 | | 12'-4" | | 148'-0" | | | | | | |
| 39 | | 12'-7" | | 152'-0" | | | | | | |
| 40 | | 12'-10" | | 155'-0" | | | | | | |
| 41 | | 13'-2" | | 158'-0" | | | | | | |
| 42 | | 13'-5" | | 161'-0" | | | | | | |
| 43 | | 13'-8" | | 164'-0" | | | | | | |
| 44 | | 14'-0" | | 168'-0" | | | | | | |
| 45 | | 14'-3" | | 171'-0" | | | | | | |
| 46 | | 14'-6" | | 174'-0" | | | | | | |
| 47 | | 14'-10" | | 178'-0" | | | | | | |
| 48 | | 15'-1" | | 181'-0" | | | | | | |
| 49 | 6 | 15'-4" | 12 | 184'-0" | 1 | | | | | |

02-MAY-2005 DGN Files IP PWIndex\16721\4433.C-043-30_FoundCoulom

STEEL

| MARK | SIZE | LGTH. | NO REQ. | TOTAL LENGTH | TYPE |
|---|---|---|---|---|---|
| 50 | 6 | 15'-8" | 12 | 188'-0" | 1 |
| 51 | | 16'-0" | | 192'-0" | |
| 52 | | 16'-3" | | 195'-0" | |
| 53 | | 16'-6" | | 198'-0" | |
| 54 | | 16'-10" | | 202'-0" | |
| 55 | | 17'-1" | | 205'-0" | |
| 56 | | 17'-4" | | 208'-0" | |
| 57 | | 17'-8" | | 212'-0" | |
| 58 | | 17'-11" | | 215'-0" | |
| 59 | | 18'-2" | | 218'-0" | |
| 60 | | 18'-6" | | 222'-0" | |
| 61 | | 18'-9" | | 225'-0" | |
| 62 | | 19'-0" | | 228'-0" | |
| 63 | | 19'-4" | | 232'-0" | |
| 64 | | 19'-7" | | 235'-0" | |
| 65 | | 19'-10" | | 238'-0" | |
| 66 | | 20'-2" | | 242'-0" | |
| 67 | | 20'-5" | | 245'-0" | |
| 68 | | 20'-8" | 12 | 248'-0" | |
| 69 | | 21'-0" | 10 | 210'-0" | |
| 70 | | 21'-3" | 10 | 212'-6" | |
| 71 | | 21'-6" | 8 | 172'-0" | |
| 72 | | 21'-10" | | 174'-8" | |
| 73 | | 22'-1" | | 176'-8" | |
| 74 | | 22'-4" | | 178'-8" | |
| 75 | | 22'-8" | | 181'-4" | |
| 76 | | 23'-0" | | 184'-0" | |
| 77 | | 23'-3" | | 186'-0" | |
| 78 | | 23'-6" | | 188'-0" | |
| 79 | | 23'-10" | | 190'-8" | |
| 80 | | 24'-1" | 8 | 192'-8" | |
| 81 | | 24'-4" | 7 | 170'-4" | |
| 82 | | 24'-8" | 5 | 123'-4" | |
| 83 | | 24'-11" | | 124'-7" | |
| 84 | | 25'-2" | | 125'-10" | |
| 85 | | 25'-5" | | 127'-5" | |
| 86 | | 25'-9" | | 128'-9" | |
| 87 | | 26'-0" | 5 | 130'-0" | |
| 88 | | 26'-4" | 2 | 52'-8" | |
| 89 | | 26'-7" | | 53'-2" | |
| 90 | | 26'-10" | | 53'-8" | |
| 91 | | 27'-2" | | 54'-4" | |
| 92 | | 27'-5" | | 54'-10" | |
| 93 | | 27'-8" | | 55'-4" | |
| 94 | | 28'-0" | | 56'-0" | |
| 95 | | 28'-3" | | 56'-6" | |
| 96 | | 28'-6" | | 57'-0" | |
| 97 | | 28'-10" | 2 | 57'-8" | |
| 98 | | 29'-1" | 6 | 174'-6" | |
| 99 | | 29'-4" | 1 | 29'-4" | |
| 100 | | 29'-8" | | 29'-8" | |
| 101 | | 30'-0" | | 30'-0" | |
| 102 | | 30'-3" | | 30'-3" | |
| 103 | 6 | 30'-6" | 1 | 30'-6" | 1 |

HOOK DETAIL

UT UTAH

BAR TYPES

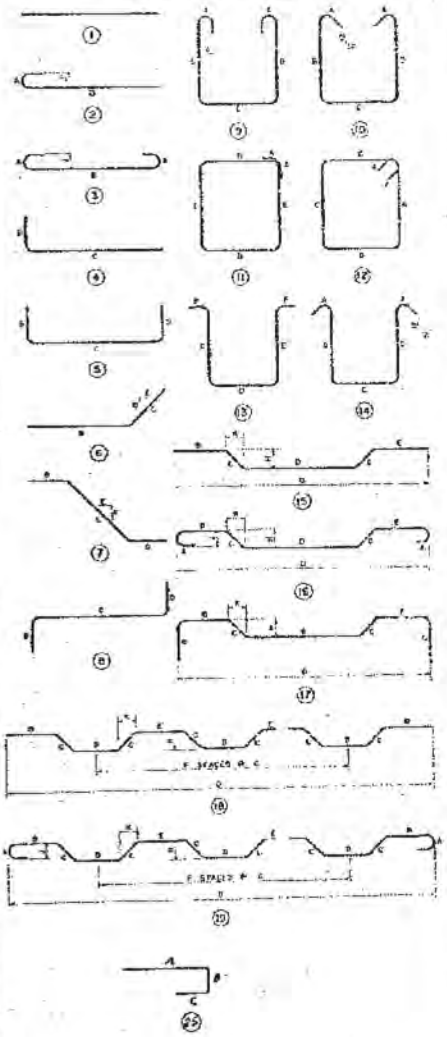

**FOR INFORMATION ONLY**

REINFORCING SCHEDULE

GENERAL NOTES

1. All placing drawings, detailing, and fabrication shall be in accordance with the "Manual of Standard Practice for Detailing Reinforced Concrete Structures (ACI 315-57)".
2. All dimensions shown for bar bending details are out-to-out of bars.

REGISTERED PROFESSIONAL ENGINEER NO. 2388 STATE OF UTAH

DESIGN AND DRAWING BY
WESTERN ENGINEERS, INC. AND
EDWARDS AND KELCEY
CONSULTING ENGINEERS

APPROVED BY R. J. Schwendiman CHIEF ENGINEER
UTAH ENGR. REG. NO. 2388

SHEET 30 OF 31 SHEETS

UTAH STATE ROAD COMMISSION
SALT LAKE CITY, UTAH
BRIDGE DEPARTMENT

EAST LEHI U.P. & U.S. 91
OVERPASS
445'-3" O. TO O. HOR. CURVE
STA. 143+89.44
LEHI PROVO UTAH COUNTY

DESIGNED BY
DRAWN BY
CHECKED BY
CHECKED BY
SCALE
ISSUED January 18, 1966
APPROVED R. J. Schwendiman CHIEF BRIDGE ENGINEER

NO. C-343

1G-15-6(20)277 2nd Contr.
I-15-6(19) 276 3rd Contr.

STRUCTURE 1-I

FOR

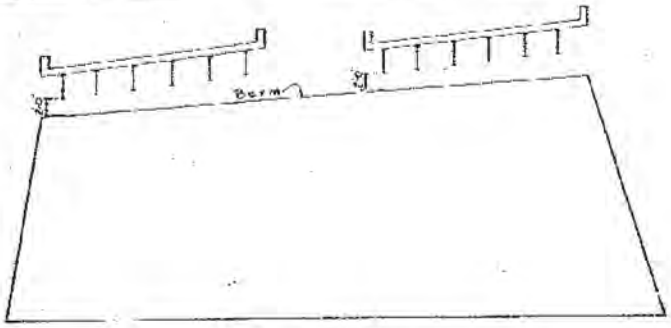


ELEVATION NORMAL TO PROFILE

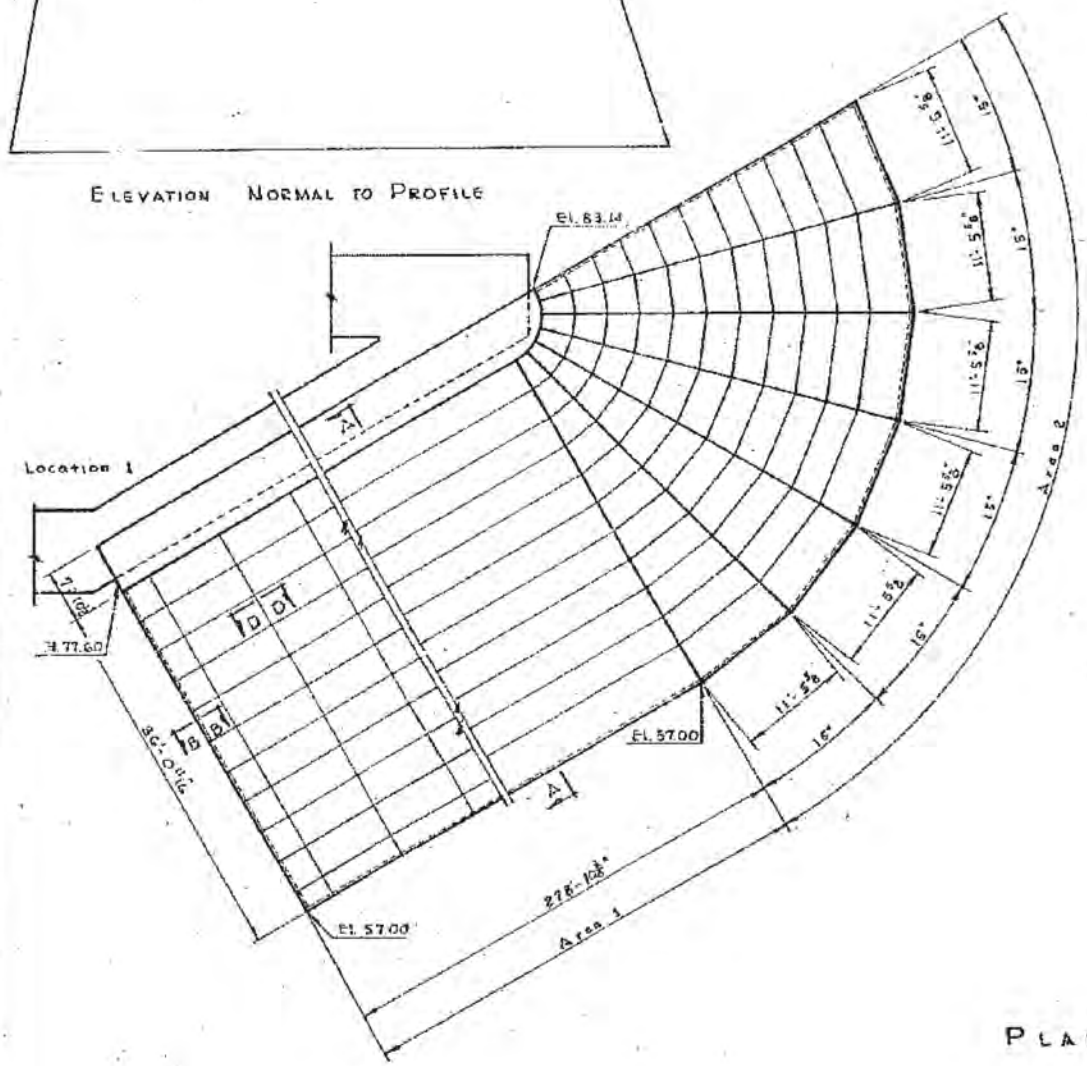


PLAN

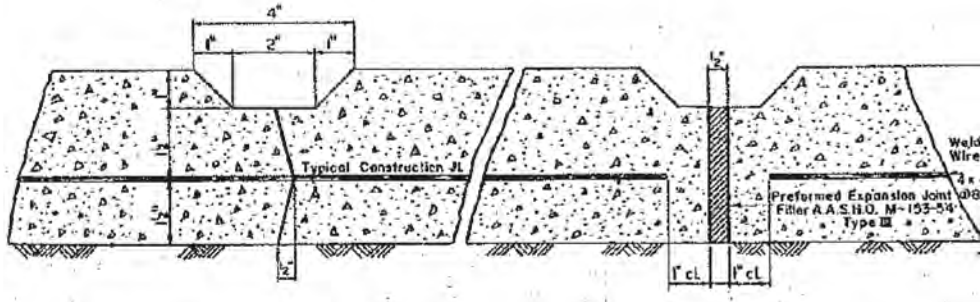


Locate Construction Joints as needed in placing concrete slab. Locate vertical Expansion Joints at 40'-0" max. spacing in slab.

SECTION C-C

SECTION D-D

R INFORMATION ONLY

| CONC. SLOPE PROTECTION | | | | |
|---|---|---|---|---|
| Location No. | Avg. Slope Length | Area "1" (2) | Area "2" or "3" (3) | Quantity Sq. Yd. (1) |
| 1 | 42'-11 3/16" | 1525 | 209 | 1784 |
| 2 | 44'-8 5/8" | 1292 | 213 | 1505 |
| | | | | |
| | | | | 3289 |

NOTES

(1) Quantity in Sq. Yd. is estimated exposed Surface
(2) Area "1" = (Berm Width + Slope Length) x Toe Length
(3) Area "2" or "3" = (Slope Length + 5'-0") x Toe Length x 1/2

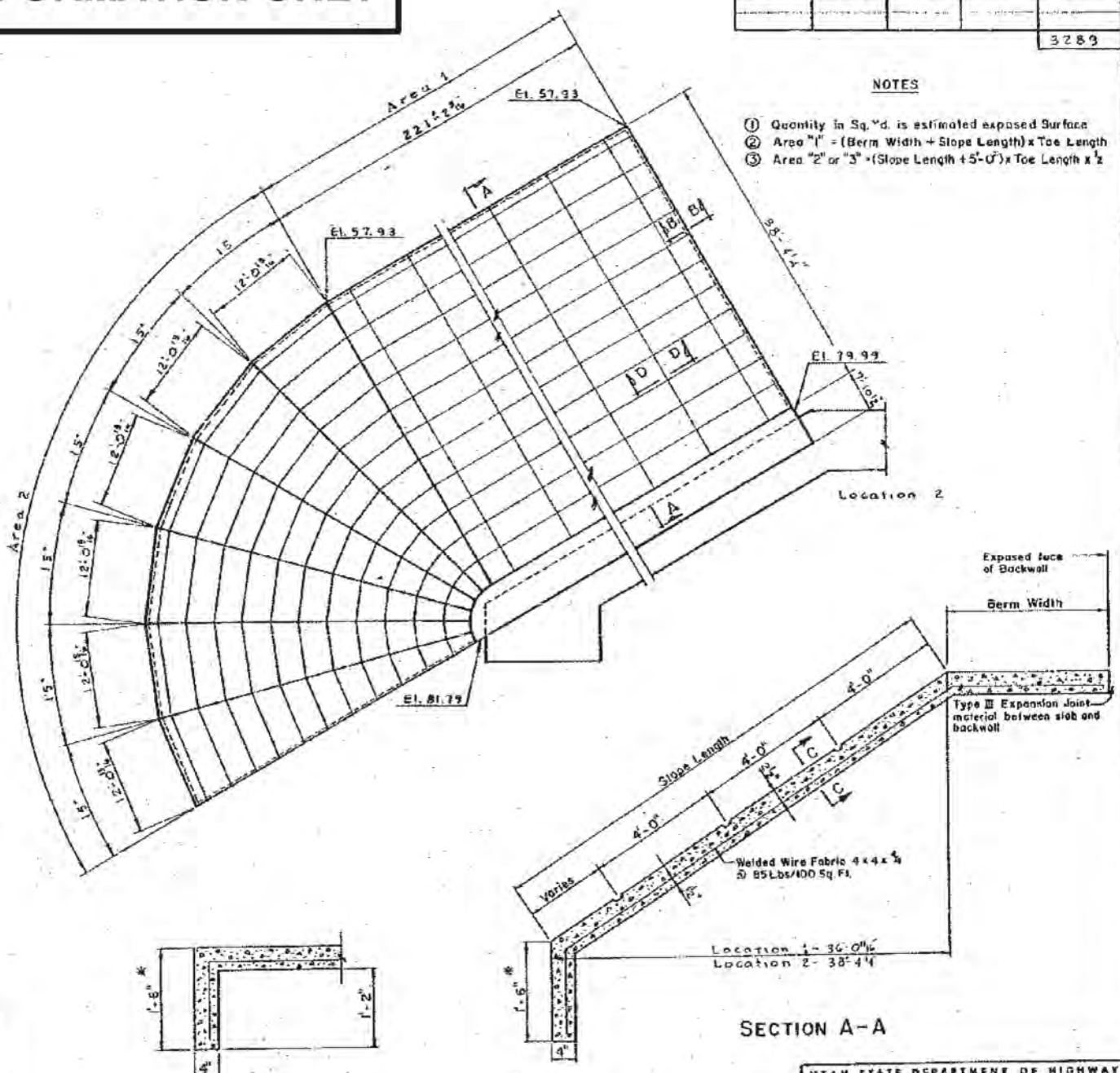


* NOTE
Cut-off Wall is not included in exposed finished surface

[6-15-6(20) 277 2nd Contr.
[-15-6(19) 276 3rd Contr.

| NO. | BY | DATE | REVISIONS |
|---|---|---|---|

UTAH STATE DEPARTMENT OF HIGHWAYS
SALT LAKE CITY, UTAH
STRUCTURES DIVISION
LEHI - PROVO
EAST LEHI U.P. & U.S. 91 OVERPASS
REINF. CONC. SLOPE PROTECTION

| | | |
|---|---|---|
| DESIGNED BY | CHECKED BY | PROJECT NUMBER |
| DRAWN BY DVB | CHECKED BY ACP | 143 + 88.44 |
| QUANTITIES BY DVB | CHECKED BY | REGION |
| RECOMMENDED BY | GROUP LEADER | UTAH |
| APPROVED | CHIEF STRUCTURAL ENGINEER | COUNTY |
| BR. NO. | DRG. NO. C-343 | 31 OF 31 |

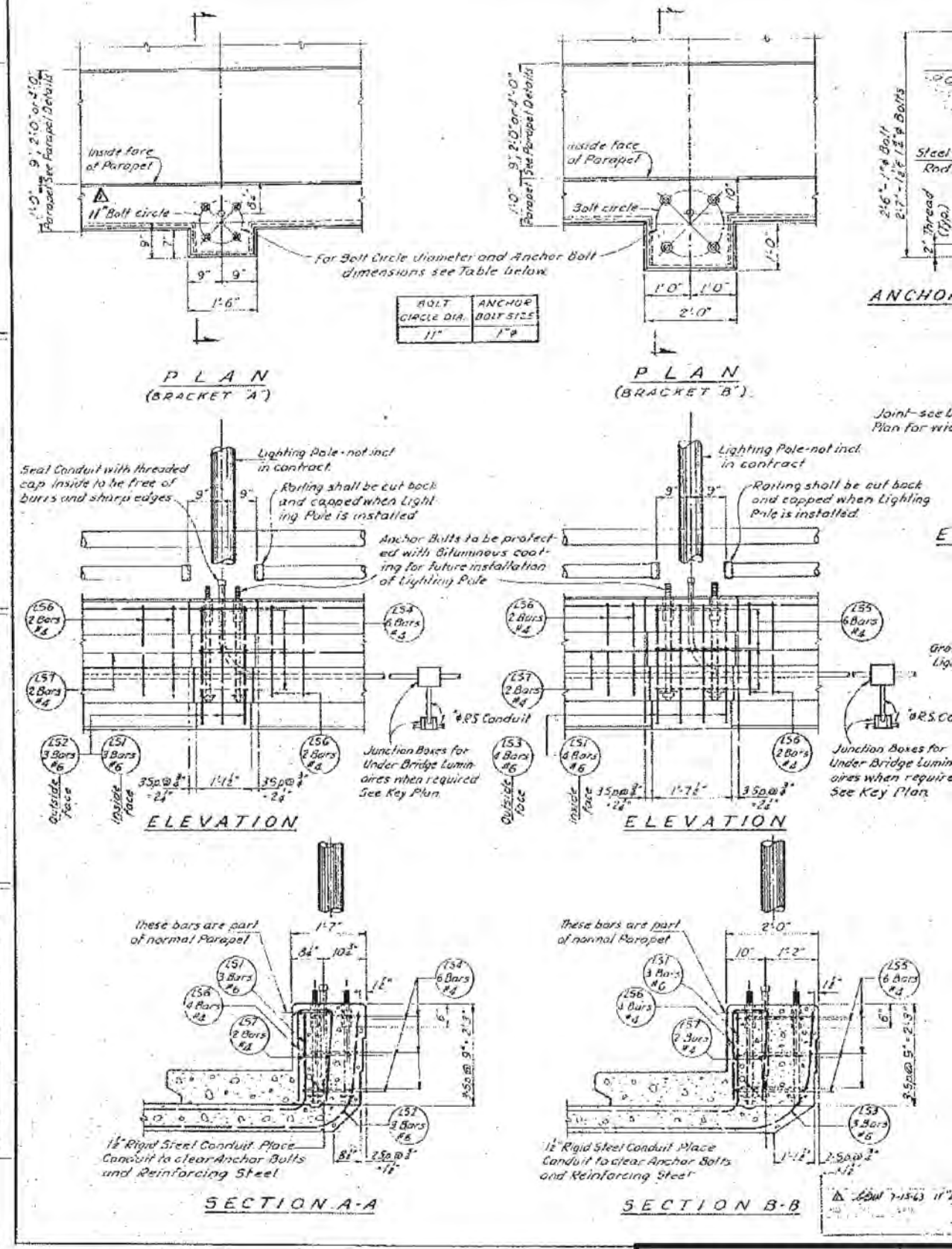


FOR INFORMATI

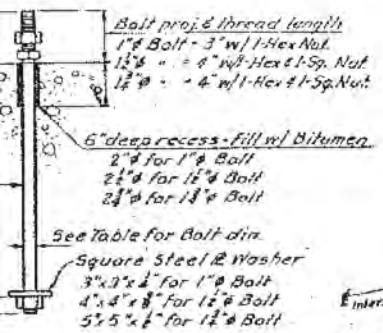


R BOLT DETAIL

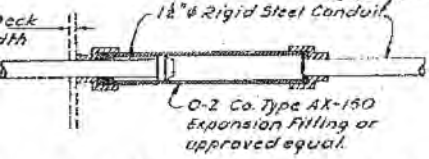


XPANSION FITTING DETAIL

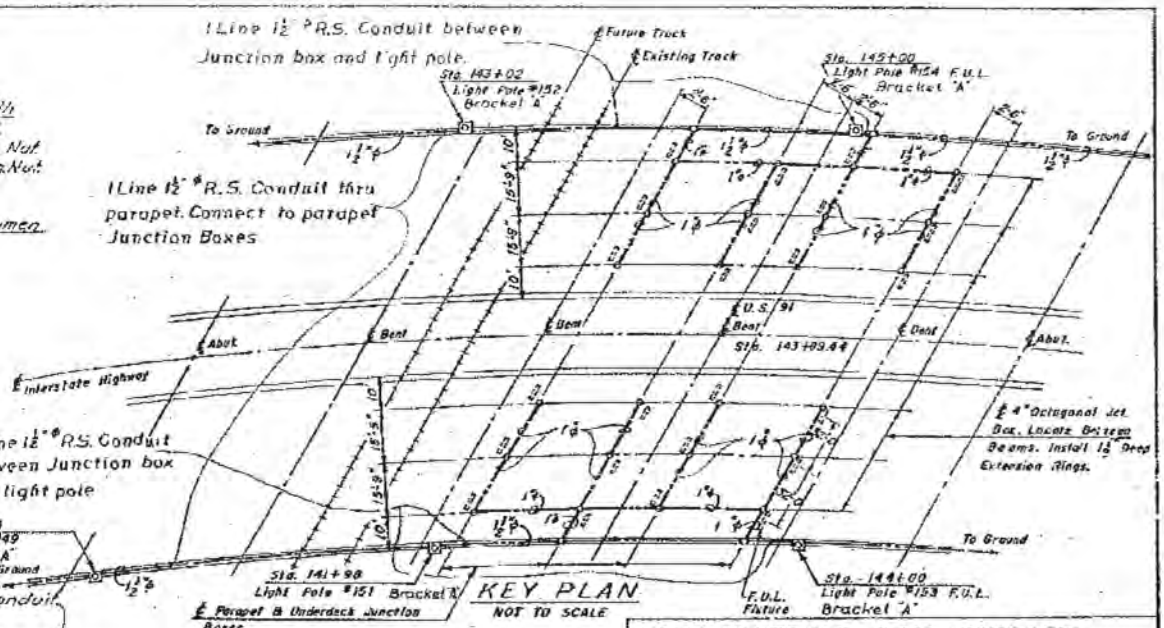


KEY PLAN
NOT TO SCALE

Note

Light Pole stationing, if shown, is approximate. Pole Mounting Bracket shall be located midway between railing posts nearest the station indicated. F.U.L. Fixtures 32'-0" C. to C. On Face of Concrete Bent Bond Beam With Barrel Studs or Equal For Attachment. Install Flexible Conduit From Deck Junction Box To Lighting Fixture. (F.U.L.-Fluorescent Understructure Lighting) Installation of F.U.L. Fixtures By Others.

## STEEL SCHEDULE - POLE SUPPORT

| MARK | SIZE | LENGTH | AMT. | SKETCH |
|---|---|---|---|---|
| LS1 | 6 | 5'-2" | 15 | 2'-10" 1'-10" 8" R |
| LS2 | 6 | 6'-1" | 15 | 3'-4" 11" R 2¼" |
| LS3 | 6 | 6'-8" | - | 3'-4" 1'-5" R 2¾" |
| LS4 | 4 | 3'-3" | 30 | LS4 - 1'-1" LS5 - 1'-6" LS4 1'-0" LS5 1'-7" |
| LS5 | 4 | 4'-8" | - | |
| LS6 | 4 | 4'-11" | 20 | 2'-1" 12" 31 8" |
| LS7 | 4 | 7'-0" | 10 | |

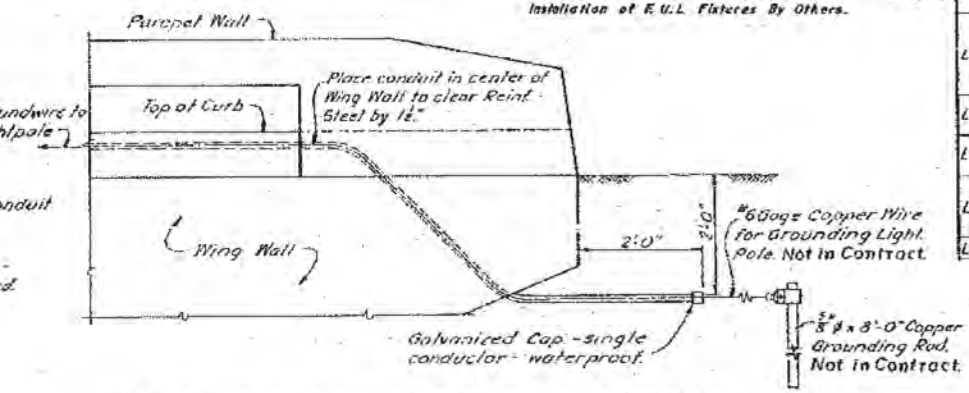


CONDUIT TERMINATION AT WING WALLS

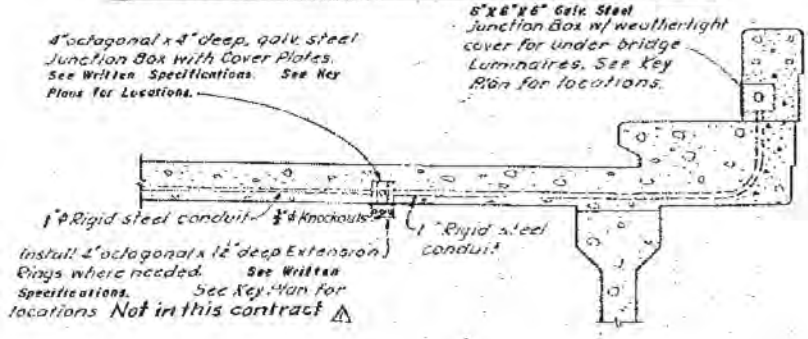


DETAILS FOR FUTURE SUSPENDED
UNDERPASS LUMINAIRES

b.c. added to Bracket "A"

## GENERAL NOTES

1. Rigid Steel Conduit, threaded and galvanized, shall conform to Federal Specifications WW-C-581c.
2. Conduit Expansion Fittings shall be installed where ever conduit crosses structure expansion joints.
3. Conduit shall terminate at junction boxes with double lock nuts and insulated grounding type bushings. Bushings shall be O-Z Co. Type BL or approved equal. All conduit shall be bonded in boxes with bare #6 AWG Copper wire.
4. All work shall conform to the latest Edition of the National Electrical Code.
5. See Special Provisions for Electrical Work - Bridges.

UTAH STATE DEPARTMENT OF HIGHWAYS
SALT LAKE CITY, UTAH
STRUCTURES DIVISION
LEHI TO PROVO
EAST LEHI U.P.& U.S. 91 OVERPASS
ELECTRICAL WORK BRIDGES

DESIGNED BY
CHECKED BY
DRAWN BY V.H.O.
CHECKED BY
CHARACTER BY
CHECKED BY
143+89.44
STATION
Utah
COUNTY
1-E
C-343
31a of 31

Ia-15-6(20) 217 2nd Contr.
I-15-6(19) 216 3rd Contr.

ION ONLY

# FOR INFORMATION ONLY

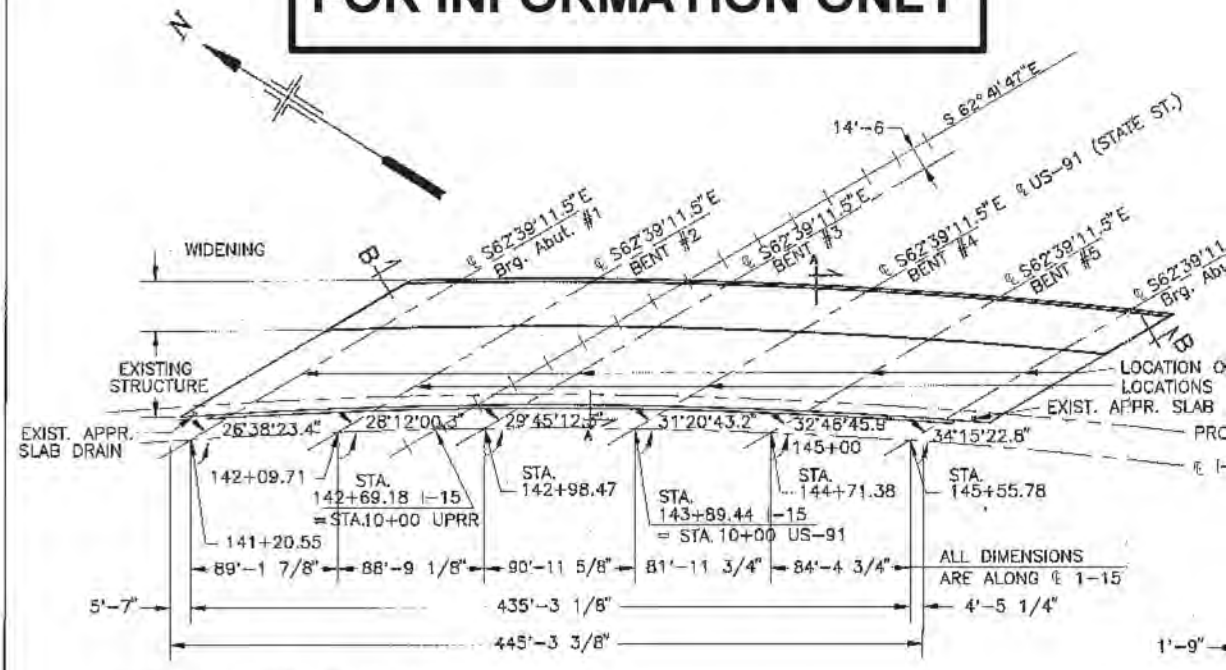


NOTE: ALL ANGLES ARE TO TANGENT.

PLAN

BITUMINOUS SURFACING REQ'D —
WATERPROOFING MEMBRANE REQ'D —
VARIES —
VARIES —

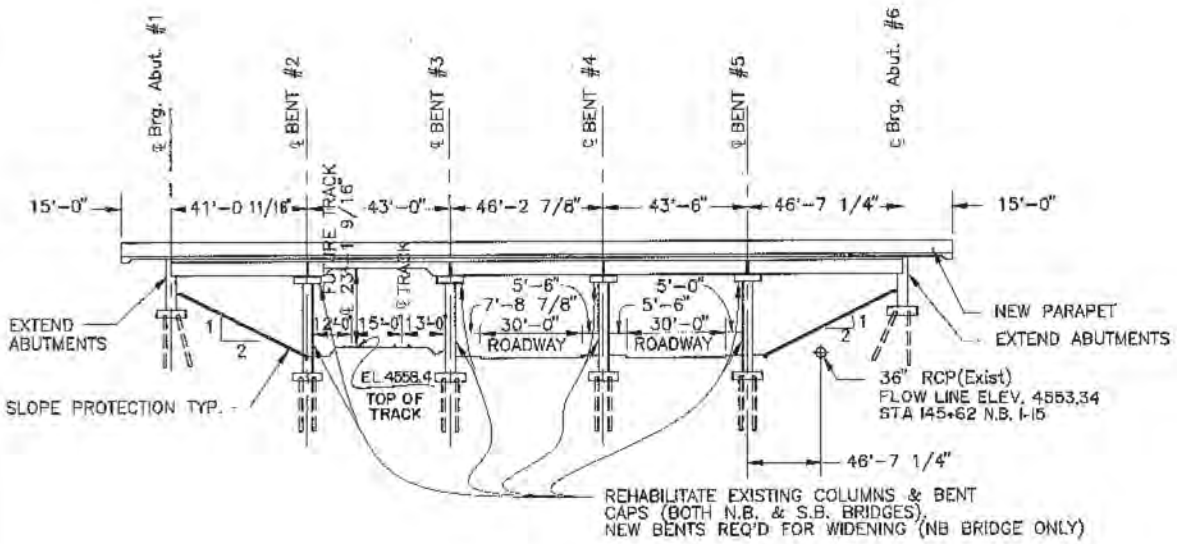


SECTION B-B THRU WIDENING
(NORMAL TO US-91)

FOR
FOR

C-343W

DGN Files JP PwPadmsU672\4433_C-343W-01_Formfoudon

02-MAY-2005

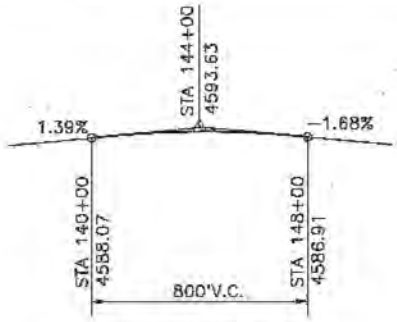


## I-15 EXISTING PROFILE
(ORIGINAL FINISHED GRADE)

F EXISTING JOINT CLOSURES
OF EXISTING EXP. JOINT
DRAIN
FILE LINE
-15

NOTE: PROFILE GRADES ARE THEABETICAL BASED ON THE ORIGINAL PLANS AND MAY NEED TO BE ADJUSTED TO MEET EXISTING CONDITIONS. THE CONTRACTER IS RESPONSIBLE FOR ANY ADJUSTMENTS AND PROPER FIT.

## CURVE DATA

CURVE 1

| | |
|---|---|
| PI | 141+14.28 |
| Δ | 36°13'10" |
| D | 1°45' |
| R | 3274.04' |
| T | 1070.74' |
| L | 2069.68' |

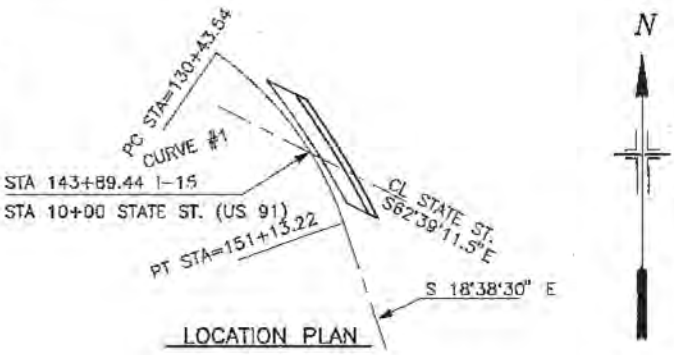


## LOCATION PLAN

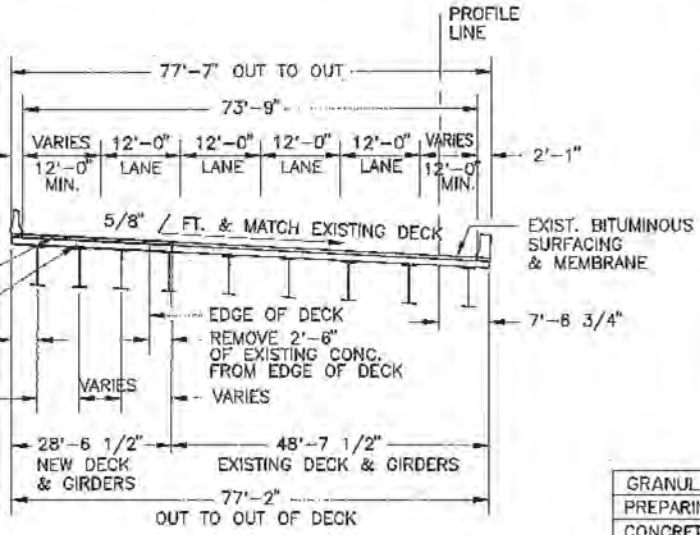


## SECTION A-A
(RADIAL)

## GENERAL NOTES

1. MATERIALS, CONSTRUCTION AND WORKMANSHIP SHALL BE IN ACCORDANCE WITH THE UTAH DEPARTMENT OF TRANSPORTATION STANDARD SPECIFICATIONS FOR ROAD AND BRIDGE CONSTRUCTION, EDITION OF 1979, AND SUPPLEMENTS THERETO, WHICH ARE IN EFFECT AT THE DATE OF REQUEST FOR BIDS.
2. ALL REINFORCING STEEL SHALL BE DEFORMED BILLET-STEEL BARS CONFORMING TO ASTM DESIGNATION A615, GRADE 60.
3. ALL STRUCTURAL STEEL SHALL BE STRUCTURAL CARBON STEEL CONFORMING TO AASHTO DESIGNATION M-270 GRADE 36
4. EXPOSED CONCRETE CORNERS SHALL BE CHAMFERED 3/4" EXCEPT WHERE NOTED OTHERWISE.
5. COVER TO REINFORCING STEEL SHALL BE 2" EXCEPT WHERE NOTED OTHERWISE.
6. ALL CAST-IN-PLACE CONCRETE SHALL BE CLASS AA(AE) EXCEPT WHERE SPECIFIED OTHERWISE.
7. ALL REINFORCING STEEL SHALL BE EPOXY COATED.

## DESIGN DATA

HS 20-44 OR INTERSTATE ALTERNATE LOADING IN ACCORDANCE WITH AASHTO SPECIFICATION OF 1989 AND INTERIM SPECIFICATIONS.
CAST-IN-PLACE CONCRETE: fc = 1,400 PSI, fs (REINF) = 24,000 PSI, N = 8
STRUCTURAL STEEL = fB = 20,000 PSI
WEARING SURFACE: 1/2" CONCRETE 35 LBS/SQ. FT. FUTURE WEARING SURFACE.
DESIGN SPEED: I-15 70 MPH, US-91 45 MPH

## INDEX OF SHEETS


1. SITUATION AND LAYOUT
2. SOIL DATA
3. SOIL DATA
4. PILE LAYOUT AND FOUNDATION PLAN
5. CONCRETE PILE DETAILS
6. ABUTMENT #1 DETAILS
7. ABUTMENT #6 DETAILS
8. SEISMIC RETROFIT AND DELAMINATION REPAIR DETAILS
9. BENT DETAILS
10. FRAMING PLAN & SCREED DETAILS
11. GIRDER DETAILS
12. STEEL DETAILS
13. STEEL DETAILS
14. DECK PLAN AND SECTIONS
15. EXPANSION JOINT DETAILS
16. PARAPET DETAILS
17. CONCRETE SLOPE PROTECTION
18. REINFORCING STEEL SCHEDULE
19. REINFORCING STEEL SCHEDULE


## ORIGINAL PLAN SHEETS
(FROM DRG. C-343)

INFORMATION ONLY SHEETS 4,7,15,21,22,23,24,25&27
INFORMATION SHOWING REQUIRED WORK SHEETS 3,9,12,17,18,19,20&31

## QUANTITIES

| ITEM | ESTIMATED | UNIT | AS CONST. |
|---|---|---|---|
| GRANULAR BACKFILL BORROW | 217 | CU. YDS. | |
| PREPARING EXISTING STRUCTURE FOR WIDENING | 1 | LUMP | |
| CONCRETE CLASS AA (AE) EST. QUANT. 994 CU. YDS) | 1 | LUMP | |
| REINFORCING STEEL (EPOXY COATED) | 198,679 | LBS. | |
| STRUCTURAL STEEL (EST. QUANT. 281,195 LBS.) SPECIALITY ITEM | 1 | LUMP | |
| DRIVEN PILES | 5,621 | LIN. FT. | |
| FURNISHING PILE DRIVING EQUIPMENT | 1 | LUMP | |
| CONCRETE SLOPE PROTECTION | 858 | SQ. YDS. | |
| DELAMINATION REPAIR | 7,300 | SQ. FT. | |
| CABLE RESTRAINT AND ANCHORAGE | 60 | EACH | |
| CONCRETE SEALANT | 18,362 | SQ. FT. | |
| WATERPROOFING MEMBRANE | 1,568 | SQ. YDS. | |
| BITUMINOUS SURFACE MIX (1/2" MAX.) | 125 | CU. YDS. | |
| BITUMINOUS SURFACING REMOVAL (1"± DEPTH) | 2,465 | SQ. YDS. | |
| PLANT MIX BITUMINOUS SEAL COAT (TYPE A) | 111 | CU. YDS. | |
| BITUMINOUS SURFACING REMOVAL (FULL DEPTH) | 75 | SQ. YDS. | |
| EXPANSION JOINT MODIFICATION | 1 | LUMP | |
| CONCRETE SLOPE PROTECTION REMOVAL | 196 | SQ. YDS. | |

| NO. | BY | DATE | REVISIONS |
|---|---|---|---|
| 1 | BMC | 9-7-92 | |

REVISIONS

UTAH DEPARTMENT OF TRANSPORTATION
SALT LAKE CITY, UTAH
STRUCTURES DIVISION

LEHI MAIN STREET INTERCHANGE
I-15 N.B. WIDENING OVER US-91 & UPRR
SITUATION AND LAYOUT

DESIGN AOB 4-2-91 CHECK CF 6-92
DRAWN BJ 5-8-91 CHECK AOB 8-14-91
CHART AOB 9-5-91 CHECK CF 6-92
APPROVAL RECOMM. 9/15/92 SENIOR ENGINEER
APPROVED DATE CHIEF STRUCTURAL ENGRS.

STATION 143+89.44
COUNTY UTAH
DRG. NO. C-343W
SHT. 1 OF 19

(R-15-6(107)282
PROJECT NUMBER

FILE: SSSTR1.DWG 1:50 DR14 8-17-92

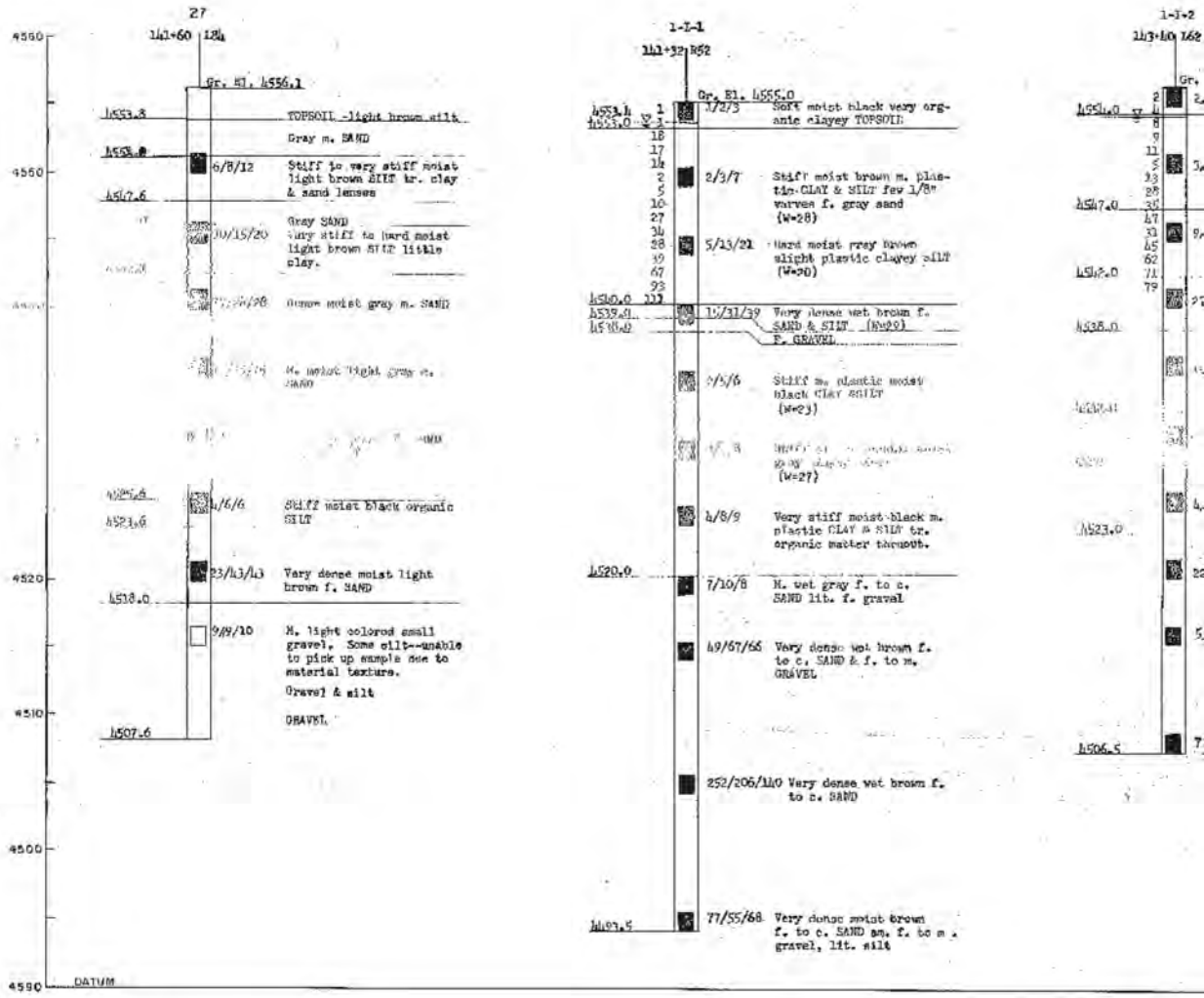


**FOR INFORMATION ONLY**

DGN Files: IP_PwPadesl16721x4433.C-043W-02_FenceFoundation

02-MAY-2005

| FED. ROAD DIST. NO. | STATE | FED. AND PROJ. NO. | FISCAL YEAR | SHEET NO. | TOTAL SHEETS |
|---|---|---|---|---|---|
| UT | UTAH | | | | |

Gr. El. 4550.0

/4/7 Loose wet dark brown silty fibrous TOPSOIL

/4/6 M. wet m. plastic brown CLAY & SILT (W=24)

/17/26 Dense wet m. to f. brown SAND

/28 Dense wet c. to f. brown SAND tr. gravel.

/14/30 Dense wet m. brown SAND some clayey silt

/6/10 Stiff wet low plastic dark gray SILT & CLAY (W=28)

/43/57 Very dense wet f. gray SAND & SILT

/13/17 Stiff moist low plastic brown SILT & CLAY lit. f. sand. (W=23)

Very dense wet brown GRAVEL some c. to f. sand.

/107/170

1-I-3

145+80 L55

Gr. El. 4565.0

| | | |
|---|---|---|
| | 5/8/15 | M. moist brown f. SAND tr. silt tr. gravel |
| 4552.0 | | |
| | 4/6/11 | Stiff moist m. plastic brown CLAY & SILT (W=27) |
| | 22/25/40 | Hard moist low plastic varved brown SILT & CLAY up to 1" layers & f. brown SAND up to 3/4" layers. (W=20) |
| | 12/20/26 | Hard moist low plastic brown SILT & CLAY tr. minute lenses f. gray SAND (W=21) |
| 4531.0 | 23/46/74 | Hard moist low plastic brown varved SILT & CLAY up to 1" layers some 1/8" layers f. brown Sand. (W=21) |
| | 6/12/25 | Very stiff low plastic gray SILT & CLAY (W=18) |
| | 6/9/12 | Very stiff moist m. plastic dark gray CLAY & SILT (W=28) |
| 4520.0 | 19/49/73 | Very dense wet f. dark gray SAND |
| 4516.0 | 23/204/176 | Very dense wet gray gravel some c. to f. SAND lit. silt |
| | 47/162/217 | Very dense wet c. to f. gray SAND lit. gravel |
| 4491.5 | 162/176/171 | Very dense wet brown GRAVEL sm. c. to f. sand. |

## LEGEND

Boring No. → 1-A-1

Interstate Station → 22+63 R72 — Offset

Ground Elevation → Gr. El. 4562

Ground Water Table Elevation 4557.1

Number of Blows Used to drive casing 12 inches with 300 lb. hammer falling 2 ft. (Typical)

Strata Change Elevation (Typical) 4550

Boring Advanced Without Casing

Location of Sample (Typical) 4539

Bottom of Boring Elevation 4535.5

| | | |
|---|---|---|
| 4560 | 2/1/5 | Stiff m. plastic brown clay some silt-TOPSOIL |
| | 11/13/17 | M. dense wet tan m. to c. SAND, some silt, tr. f. gravel |
| | 15/21/30 | Dense wet tan m. to c. SAND, some gravel |
| | 7/6/8 | Stiff, low plastic brown CLAY & SILT, tr. f. sand (LL = 40, PL = 28, W = 32) |
| | 12/18/18 | Very stiff, plastic gray CLAY & SILT, tr. f. sand (W = 35, qu = 2.5/ft.) |
| | 9/12/20 | Very stiff varved plastic gray silty CLAY & f. silty SAND |

Number of Blows Used to drive 1-3/8" I.D. sampler with 140 lb. hammer falling 30 inches — 1st. 6 inches, 2nd. 6 inches, 3rd. 6 inches

Visual soil description for each sample and results of classification tests, if any (Typical)

ABBREVIATIONS IF AND WHEN USED:

br. = brown
gr. = gray
org. = organic
f. = fine
v. f. = very fine
m. = medium
c. = coarse
sm. = some
tr. = trace
lit. = little
LL = Liquid Limit in %
PL = Plastic Limit in %
W = Natural Moisture Content in %
qu = Unconfined compression test from pocket penetrometer in T/ft.²

## BORING LOGS

SHEET 2 OF 19 SHEETS

UTAH STATE ROAD COMMISSION
SALT LAKE CITY, UTAH
BRIDGE DEPARTMENT

I-15-6(107)282

DESIGN AND DRAWING BY
WESTERN ENGINEERS, INC. AND
EDWARDS AND KELCEY
CONSULTING ENGINEERS

SUBMITTED BY R. J. Schwendiman CHIEF ENGINEER
UTAH ENGR. LIC. NO. 2388

REGISTERED PROFESSIONAL ENGINEER NO. 2388 H. LEON LEONARD STATE OF UTAH

I-15 N.B. WIDENING OVER US-91 & UPRR
SOIL DATA

STA. 143+89.44
LEHI MAIN ST. INTER. UTAH COUNTY

DESIGNED BY E.K.K. SCALE 2/10/1/20
DRAWN BY E.K.K. DATE June 11, 1963
TRACED BY E.K.K. APPROVED D. L. Sorensen
CHECKED BY E.K.K. CHIEF BRIDGE ENGINEER

No. C-343 W

STRUCTURE I-1

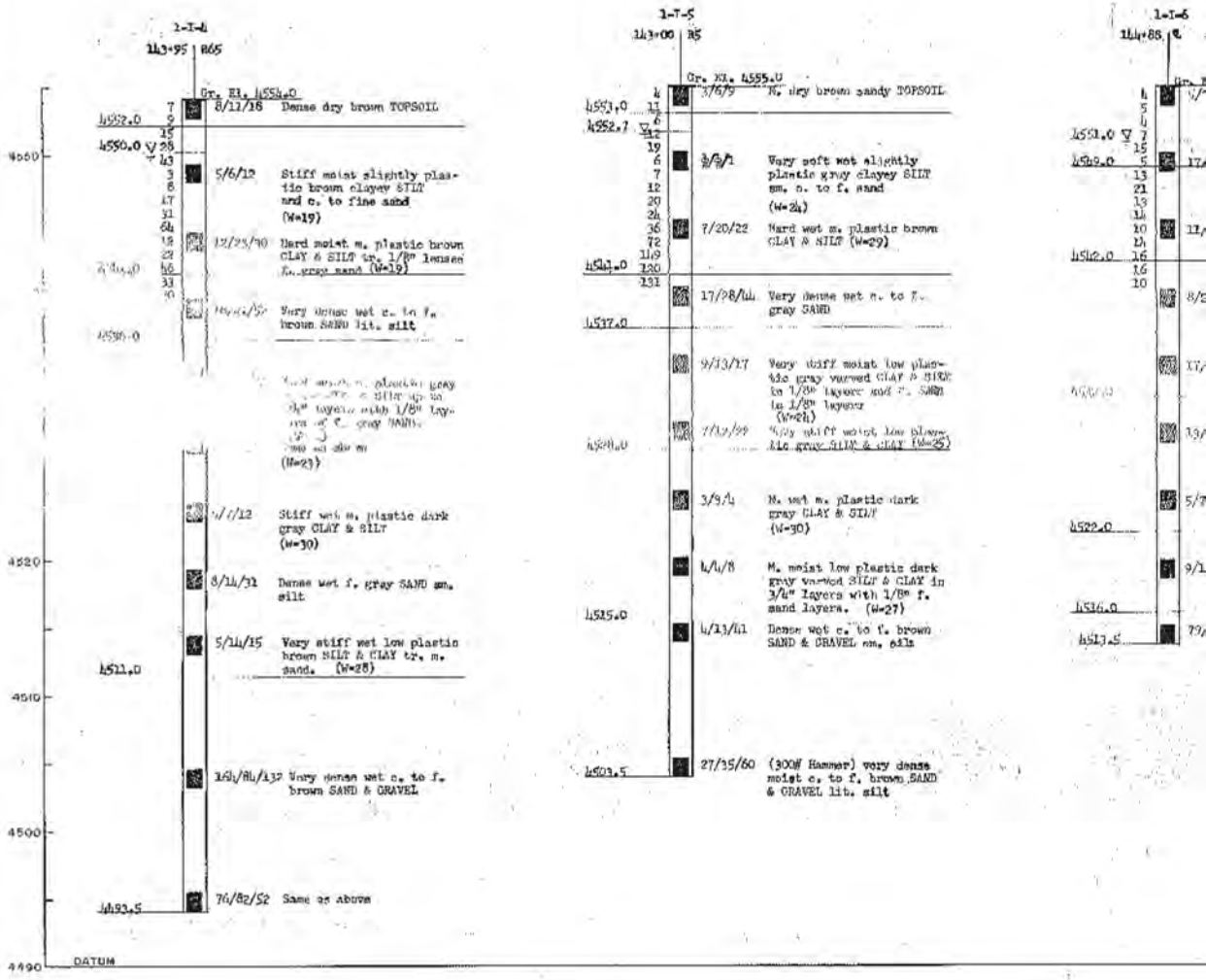


**FOR INFORMATION ONLY**

| FED. ROAD DIST. NO. | STATE | FED. AID PROJ. NO. | FISCAL YEAR | SHEET NO. | TOTAL SHEETS |
|---|---|---|---|---|---|
| UT | UTAH | | | | |

## LEGEND

Boring No. — 1-4-1

Interstate Station — 22+63 R72 — Offset

Ground Elevation — Gr. El. 4562

Ground Water Table Elevation 4557.1 ▽

Number of Blows Used to drive casing 12 inches with 300 lb. hammer falling 2 ft. (Typical)

Strata Change Elevation (Typical) — 4550

Boring Advanced Without Casing

Location of Sample (Typical) — 4539

Bottom of Boring Elevation — 4535.5

Number of Blows Used to drive 1-3/8" I.D. sampler with 140 lb. hammer falling 30 inches — 1st. 6 inches, 2nd. 6 inches, 3rd. 6 inches

| | | | |
|---|---|---|---|
| 4560 | 3, 7, 9 | 2/4/5 | Stiff m. plastic brown clay some silt-TOPSOIL |
| | 12, 17, 10, 17, 22, 33, 40 | 11/13/17 | M. dense wet tan m. to c. SAND, some silt, tr. f. gravel |
| | 36, 43, 86, 92, 106 | 15/21/30 | Dense wet tan m. to c. SAND, some gravel |
| | | 7/6/8 | Stiff, low plastic brown CLAY & SILT, tr. f. sand (LL = 40, PL = 28, W = 32) |
| | | 11/10/12 | Very stiff, plastic gray CLAY & SILT, tr. f. sand (W = 35, qu = 1T/ft ) |
| 4535.5 | | 9/12/20 | Very stiff varved plastic gray silty CLAY & f. silty SAND |

Visual soil description for each sample and results of classification tests, if any (Typical)

### ABBREVIATIONS (IF AND WHEN USED)

br. = brown
gr. = gray
org. = organic
f. = fine
v. f. = very fine
m. = medium
c. = coarse
sm. = some
tr. = trace
lit. = little
LL = Liquid Limit in %
PL = Plastic Limit in %
W = Natural Moisture Content in %
qu = Unconfined compression test from pocket penetrometer in t/ft.²

1. 4555.0
/9 Very stiff moist brown silty TOPSOIL

Dense wet c. to f. brown
16/10 SAND & clayey SILT

14/17 Dense wet f. brown SAND

1/29 Dense moist f. brown SAND sm. clayey silt

Hard moist low plastic gray varved SILT & CLAY up to 4" layers sm. 1/8" layers of
21/28 sand changing to
.0001 f. to m. gray SAND & GRAVEL

14/15 Very stiff moist dark gray low plastic SILT & CLAY tr. silt; some lenses f. sand (W=23)

/10 Very stiff wet m. plastic dark gray CLAY & SILT

4/31 Dense wet f. gray SAND sm. clayey silt

52/51 Very dense wet gray GRAVEL tr. c. to f. sand tr. silt

## BORING LOGS

SHEET 3 OF 19 SHEETS

UTAH STATE ROAD COMMISSION
SALT LAKE CITY, UTAH
BRIDGE DEPARTMENT

I-15 N.B. WIDENING OVER US-91 & UPRR
SOIL DATA
STA 143+89.44
LEHI MAIN ST INTER, UTAH COUNTY

DESIGNED BY EGK — SCALE AS NOTED
DRAWN BY EGK — DATE Jan. 11, 1963
TRACED BY EGK — APPROVED D. L. Sharp
CHECKED BY EGK — CHIEF BRIDGE ENGINEER

REV. NO. — DWG. NO. C-343W

STRUCTURE I-I

IR-15-6(107)282

DESIGN AND DRAWING BY
WESTERN ENGINEERS, INC. AND
EDWARDS AND KELCEY
CONSULTING ENGINEERS

SUBMITTED BY H. Jack Ledbard, CHIEF ENGINEER
UTAH ENGR. LIC. NO. 2288

REGISTERED PROFESSIONAL ENGINEER NO. 2388 H. JACK LEDBARD STATE OF UTAH

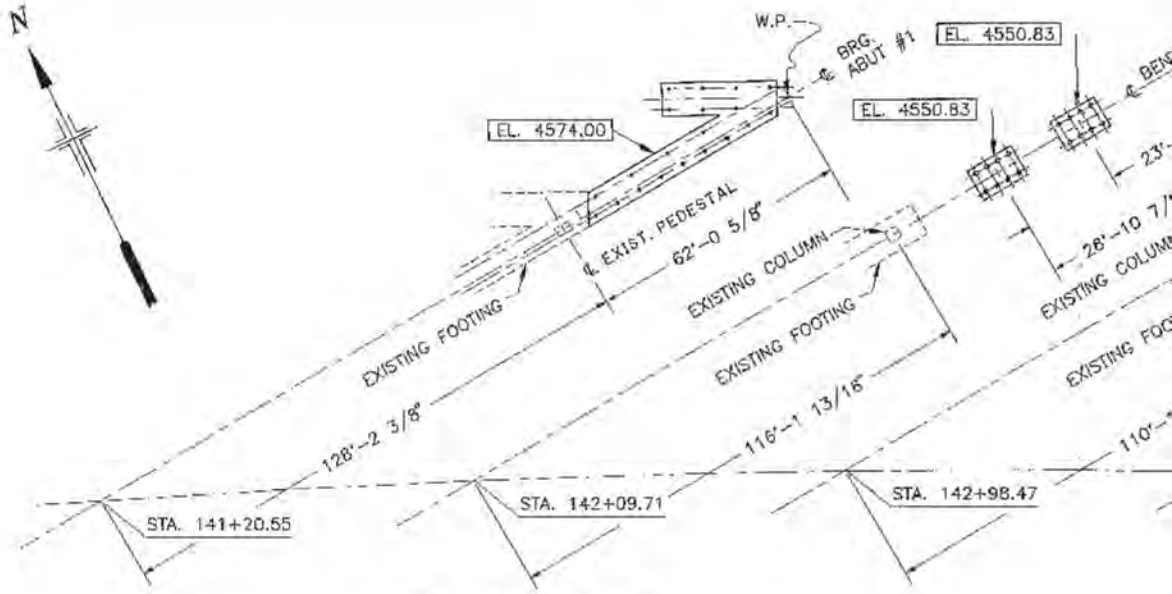


NOTE: FTG. ELEVATIONS ARE THEORETICAL BASED ON THE ORIGINAL PLANS AND MAY NEED TO BE ADJUSTED TO MEET EXISTING CONDITIONS. THE CONTRACTOR IS RESPONSIBLE FOR ANY ADJUSTMENTS AND PROPER FIT.

FOU

PILE DATA

| LOCATION | ESTIMATED PILE TIP ELEV. (FT.) | ELEV. OF MIN. ACCEPTABLE PILE PENE-TRATION (FT.) | ALLOWABLE PILE LOAD EXCEPT G.P. VII (KIPS) | CALC. PILE LOAD EXCEPT G.P. VII (KIPS) | ULT. PILE LOAD (KIPS) | CALC. PILE LOAD G.P. VII (KIPS) | SKIN FRICTION (KIPS) | CALC. UPLIFT G.P. VI |
|---|---|---|---|---|---|---|---|---|
| ABUTMENTS | 4505.00 | 4509.00 | 100 | 85 | 450 | --- | 216 | --- |
| BENTS | 4505.00 | 4509.00 | 100 | 89 | 450 | 310 | 216 | 215 |

**FOR INFORMATION ONLY**

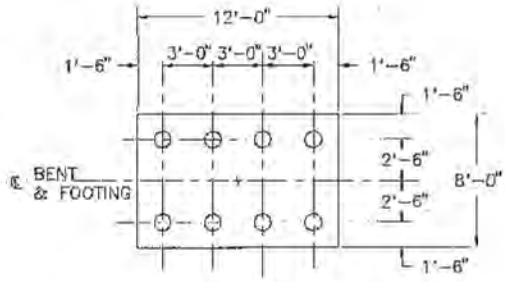


TYPICAL BENT FOOTING DETAIL

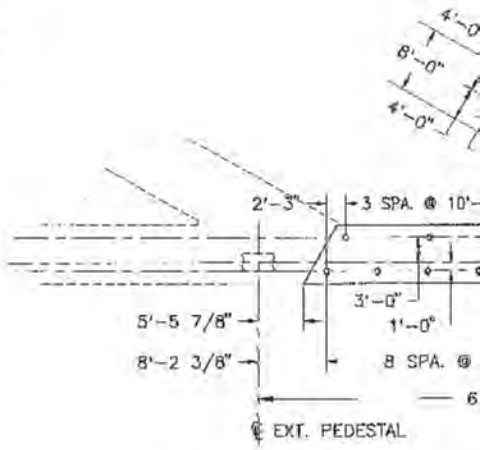


ABUTMENT #

02-MAY-2005

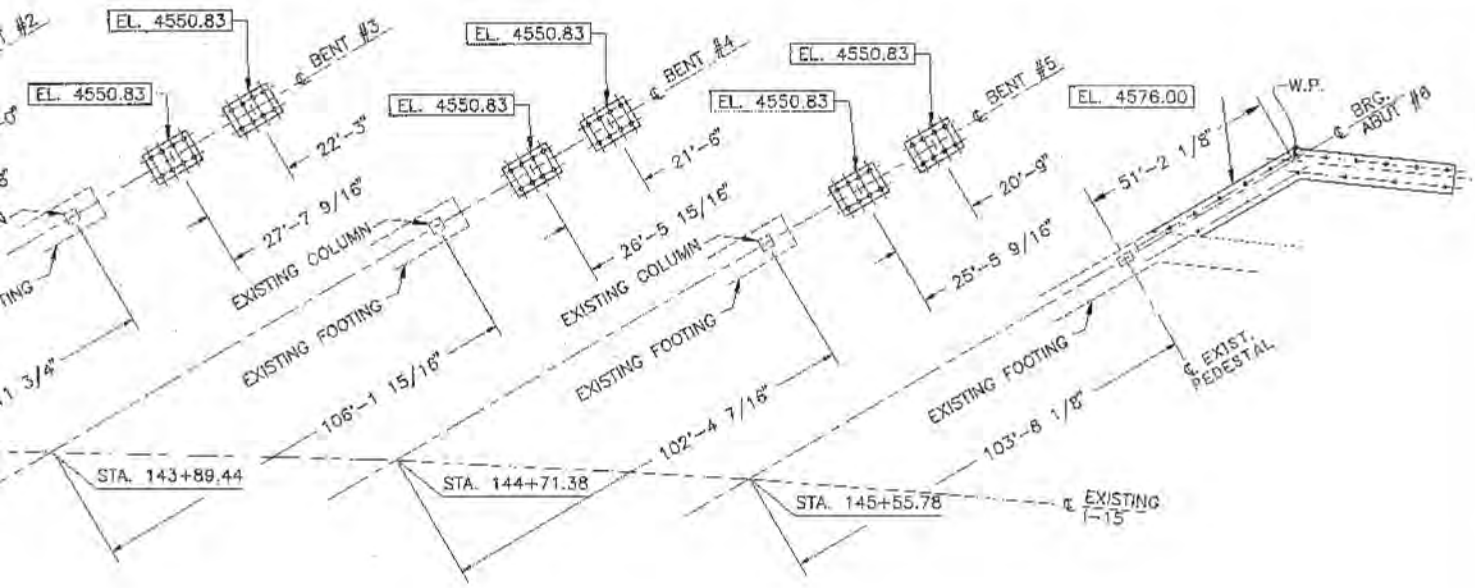


NDATION PLAN

NOTES:

1. ALL ABUTMENTS AND BENTS ARE PARALLEL TO BRG. S62°39'11.5"E.
2. ELEVATIONS AT BOTTOM OF FOOTING ARE SHOWN ENCLOSED IN RECTANGLES. e.g. | EL. 4576.00 |
3. PILE TIP ELEVATIONS GIVEN ARE APPROXIMATE ONLY AND SHALL BE VERIFIED AT THE TIME OF CONSTRUCTION IN ACCORDANCE WITH SPECIFICATIONS.
4. ∘ INDICATES BATTERED PILES

| | PILE TIP ELEV. AS CONSTRUCTED |
|---|---|
| | |
| | |

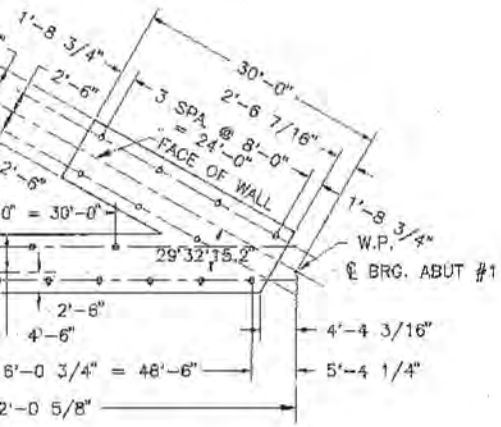


1 DETAIL

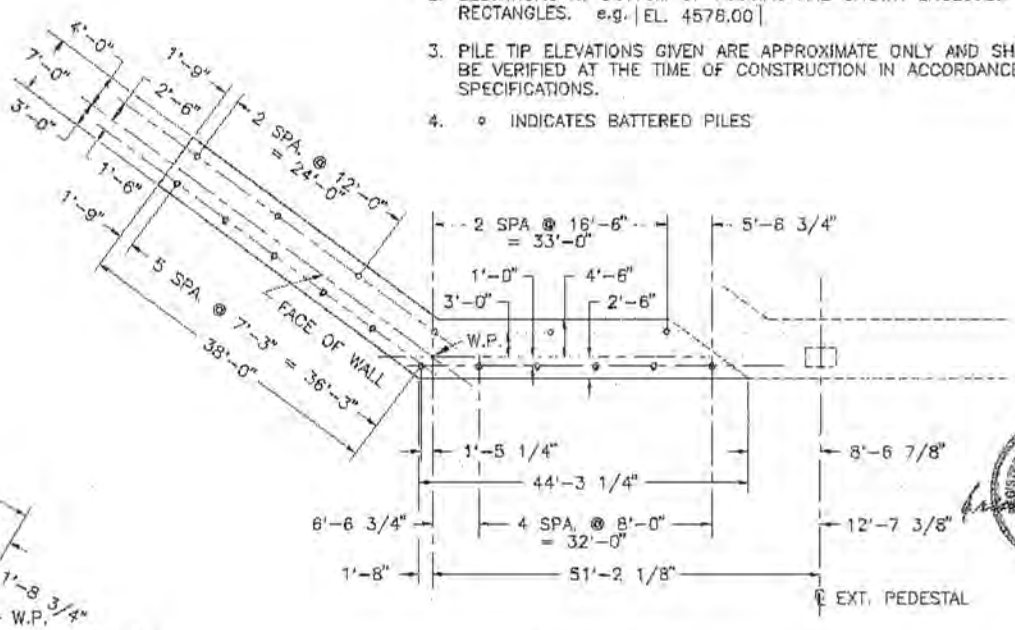


ABUTMENT #6 DETAIL

| NO | BY | DATE | REVISIONS |
|---|---|---|---|
| | | | |
| | | | |
| | | | |

REVISIONS

UTAH DEPARTMENT OF TRANSPORTATION
SALT LAKE CITY, UTAH
STRUCTURES DIVISION

LEHI MAIN STREET INTERCHANGE
I-15 N.B. WIDENING OVER US-91 & UPRR
PILE LAYOUT AND FOUNDATION PLAN

| | | | |
|---|---|---|---|
| DESIGN AOB 6-12-91 | CHECK CF 6-92 | | |
| DRAWN BJ 8-2-91 | CHECK AOB 8-14-91 | | 143+89.44 |
| DESIGN AOB 8-22-91 | CHECK CF 6-92 | | STATION |
| APPROVAL RECOMM. 9/15/92 DATE | GROUP LEADER | | UTAH |
| REVIEWED DATE | CHIEF STRUCTURAL ENGR. | | COUNTY |
| | | | DWG. NO. |
| IR-15-6(107)282 PROJECT NUMBER | | | C-343W |
| | | | SHT 4 OF 19 |

FILE: FILE: SSSTR4.DWG 1:240 DR11 6-24-92

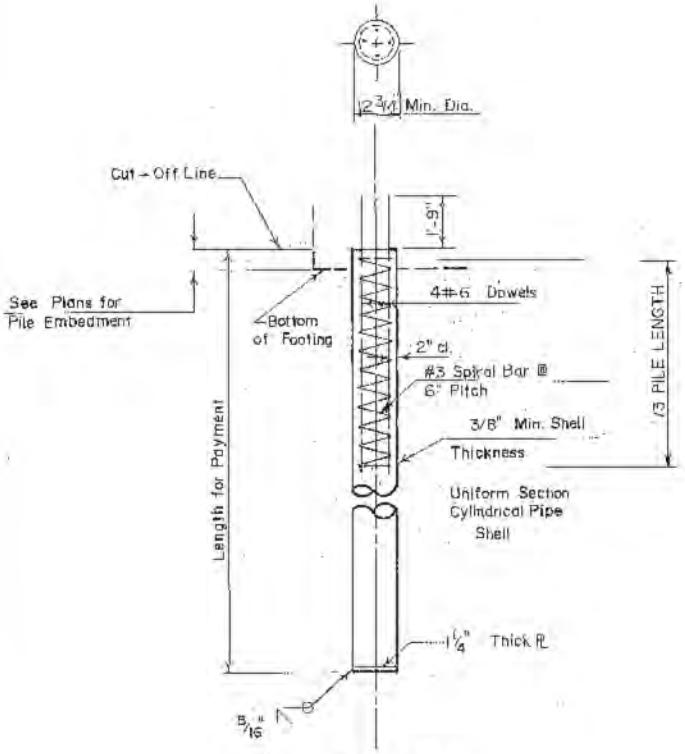


## TYPE I

Splices in Type I piles shall be full strength welded splices.

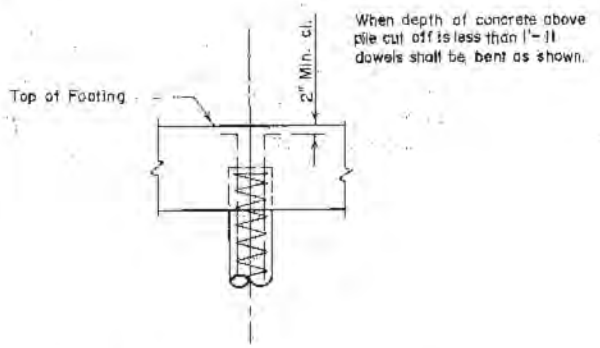


## DOWEL DETAIL

## TYPE I

## CYLINDRICAL SHELL PILES

Design shall be in accordance with the A.A.S.H.T.O. Specif
Bridges, 1989 Edition.

Pile shells shall be filled with class "A" concrete.

Reinforcing steel shall be adequately held in final position c
placing of concrete around bars.

Reinforcing steel and concrete are included in cost of
"Driven Piles".

Pile hammer shall have a minimum rated energy of
45 Kip-feet.

02-MAY-2005 DGN Files IP PWPubns\16721\4433.C-049W-05_Forum\Section

**FOR INFORMATION ONLY**

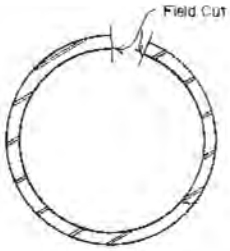


Note:
Field cut piece of pile so when compressed it will slide inside pile sections.

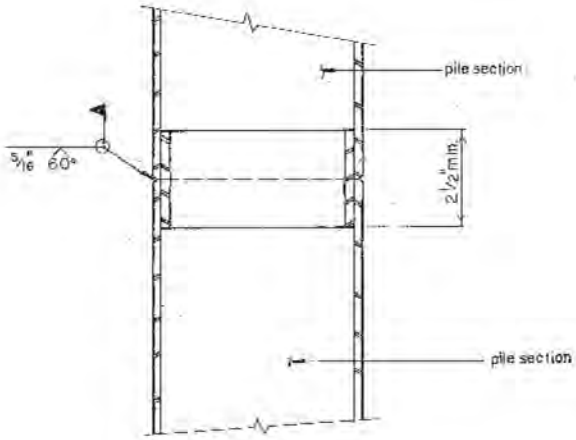


## PILE SPLICE DETAIL

S

ications for Highway

uring

| | | | |
|---|---|---|---|
| | | | |
| | | | |
| NO. | BY | DATE | REMARKS |
| | | | REVISIONS |

UTAH DEPARTMENT OF TRANSPORTATION
SALT LAKE CITY, UTAH
STRUCTURES DIVISION

LEHI MAIN ST. INTERCHANGE
I-15 N.B. WIDENING OVER US-91 & U.P.R.R.
CONCRETE PILE DETAILS

| | | | |
|---|---|---|---|
| APPROVED AOB 8-2-91 | CHECKED CF 6-92 | | |
| DRAWN BDH 8-2-91 | CHECKED AOB 8-14-91 | 143+89.44 | |
| DESIGNED AOB 8-22-91 | CHECKED CF 6-92 | STATION | |
| APPROVAL RECOMMENDED 9/15/92 DATE | GROUP LEADER | UTAH PROJECT | |
| APPROVED DATE | CHIEF STRUCTURAL ENGR. | DRG. NO. C-343W | |
| IR-15-6(107)282 PROJECT NUMBER | | SHT. 5 OF 19 | |

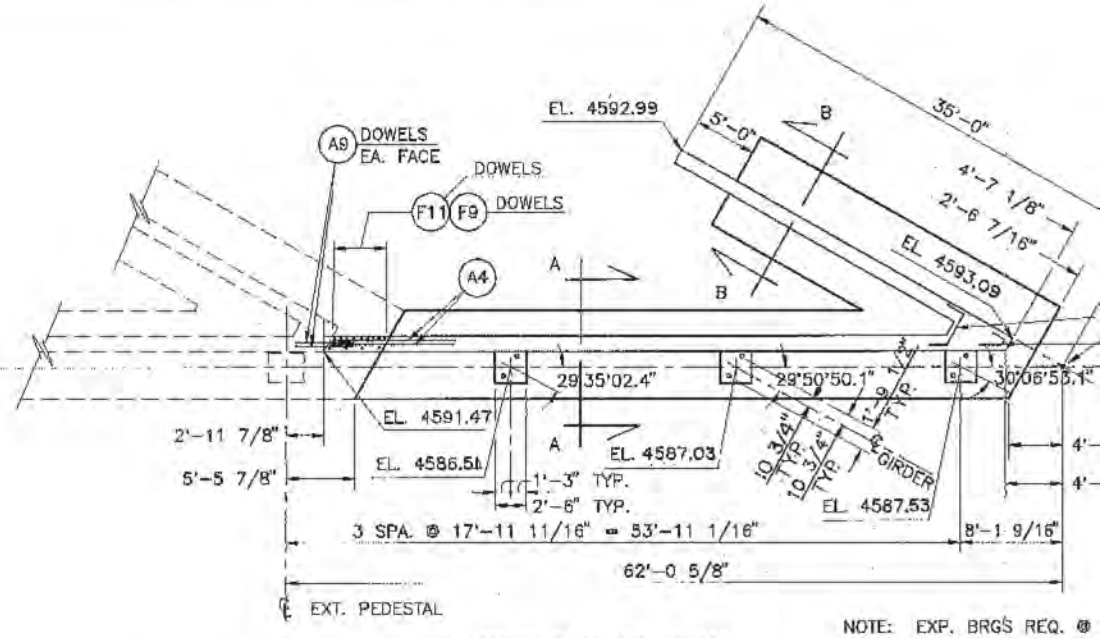


NOTE: EXP. BRG'S REQ. @

ABUTMENT #1 PLAN

NOTE: DRILL AND GROUT DOWEL BARS INTO EXISTING CONCRETE
EMBED #5 BARS 1'-3", EMBED #6 BARS 1'-6"

NOTE:

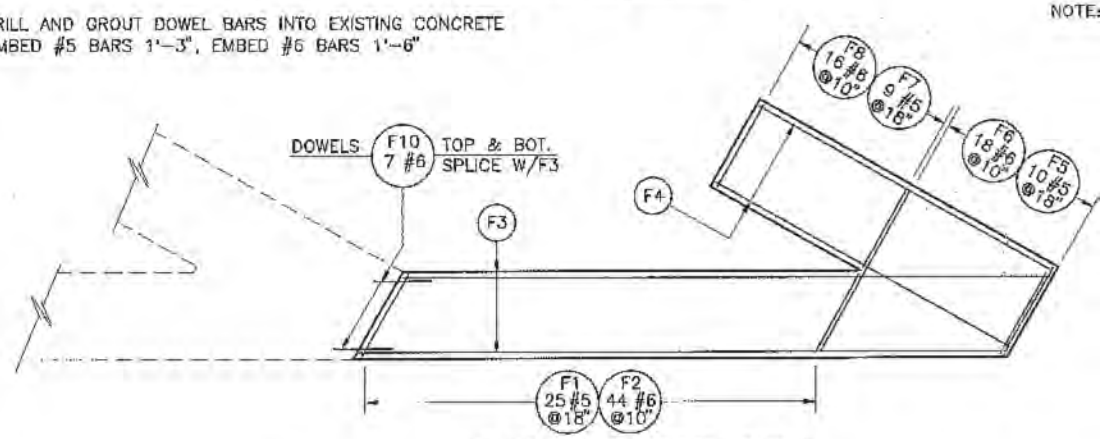


ABUTMENT #1 STEEL DETAIL

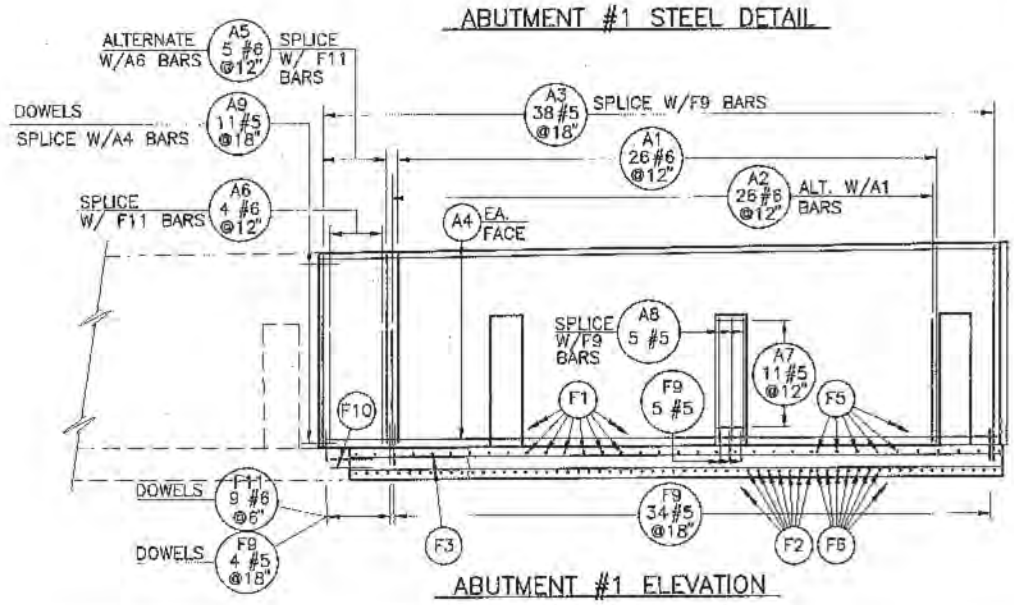


ABUTMENT #1 ELEVATION

02-MAY-2005 DGN Files IP PWPubns\1672\4433.C-049W-B5.Form\Footer

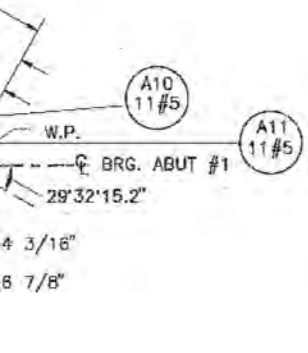


BEARING PEDESTAL AND WALL ELEVATIONS ARE THEORETICAL BASED ON THE ORIGINAL PLANS AND MAY NEED TO BE ADJUSTED TO MEET EXISTING CONDITIONS. THE CONTRACTOR IS RESPONSIBLE FOR ANY ADJUSTMENTS AND PROPER FIT.

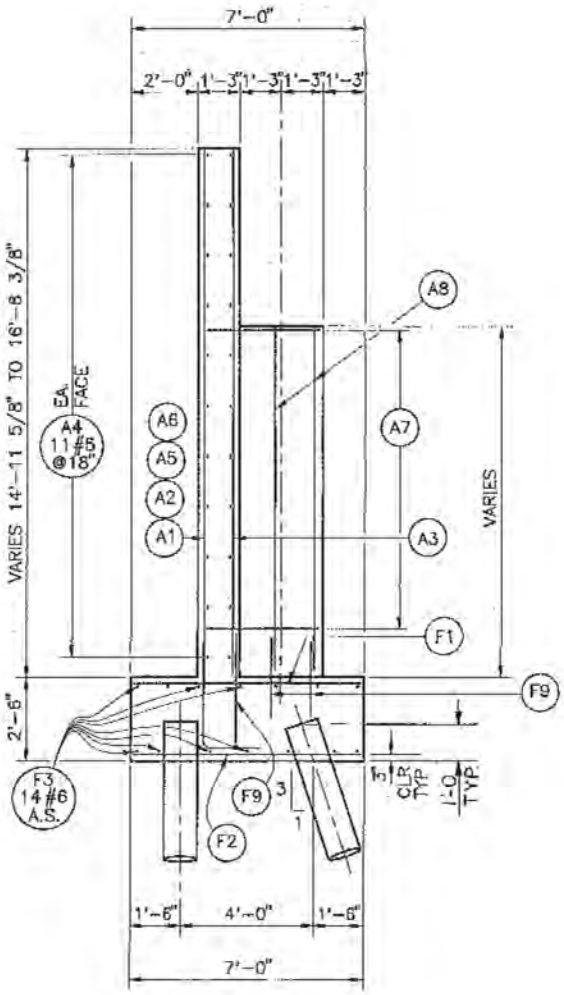


SECTION A–A

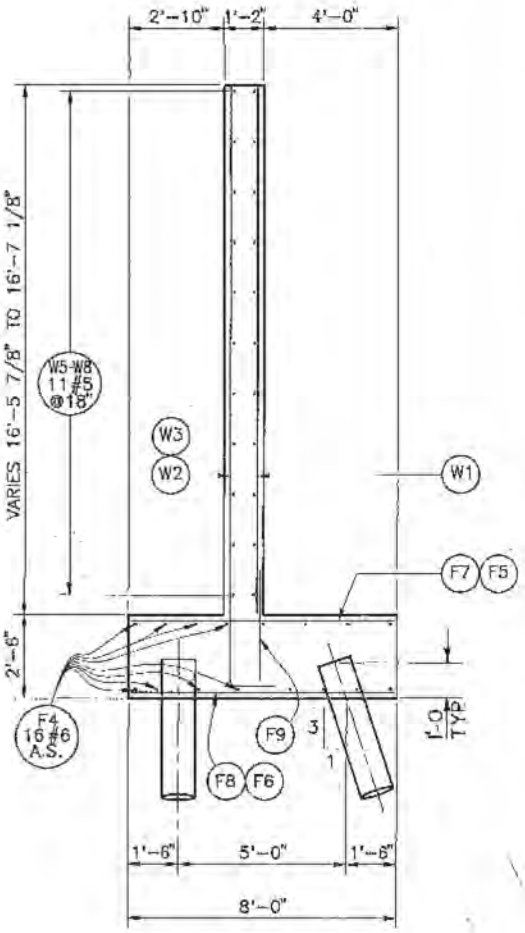


SECTION B–B

# FOR INFORMATION ONLY

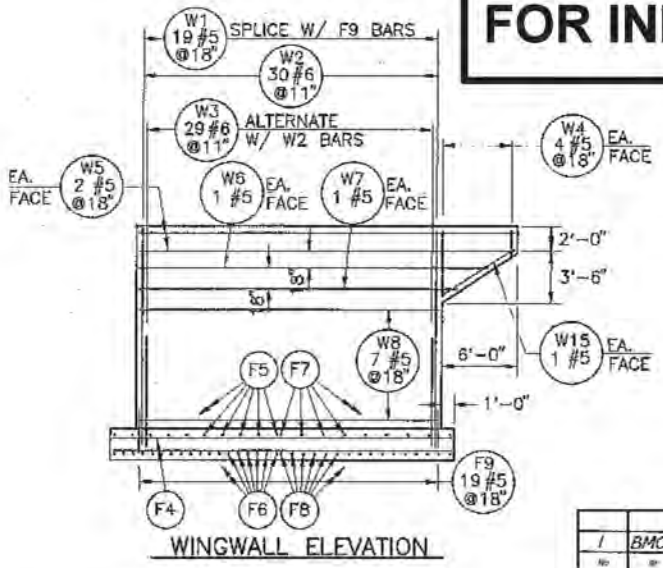


WINGWALL ELEVATION

| CONCRETE QUANTITIES | |
|---|---|
| LOCATION | CU. YDS. |
| ABUTMENT WALL | 58.21 |
| PEDESTALS | 7.31 |
| FOOTINGS | 52.97 |
| TOTAL | 118.49 |

UTAH DEPARTMENT OF TRANSPORTATION
SALT LAKE CITY, UTAH
STRUCTURES DIVISION

LEHI MAIN STREET INTERCHANGE
I-15 N.B. WIDENING OVER US-91 & UPRR
ABUTMENT #1 DETAILS

| | | | |
|---|---|---|---|
| DESIGN AOB 8-1-91 | CHECK CF 6-92 | | |
| DRAWN BJ 8-1-91 | CHECK AOB 8-16-91 | 143+89.44 | STATION |
| QUANT AOB 8-16-91 | CHECK CF 6-92 | UTAH | COUNTY |
| APPROVED | | DRG. NO. | C-343W |
| 1R-15-6(107)282 | | SHT 6 OF 19 | |

| No | BY | DATE | REVISIONS |
|---|---|---|---|
| 1 | BMC | 9-7-92 | |

FILE: SSSTR6.DWG 1:30 DRGS 6-16-92

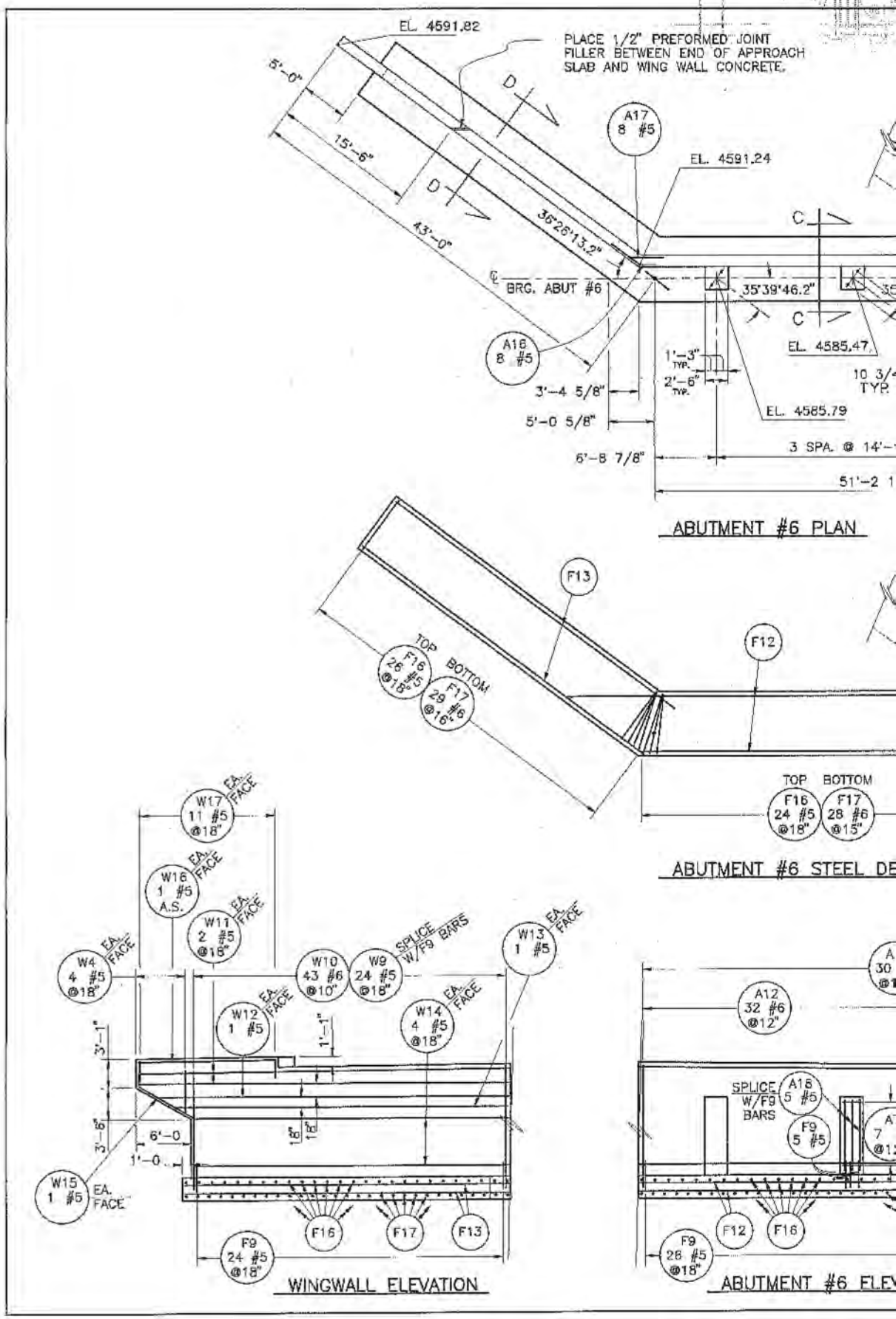
EL. 4591.82
PLACE 1/2" PREFORMED JOINT FILLER BETWEEN END OF APPROACH SLAB AND WING WALL CONCRETE.
5'-0"
15'-6"
43'-0"
D
A17 8 #5
EL. 4591.24
35°26'13.2"
℄ BRG. ABUT #6
35°39'46.2"
C
EL. 4585.47
A16 8 #5
1'-3" TYP.
2'-6" TYP.
3'-4 5/8"
5'-0 5/8"
6'-8 7/8"
EL. 4585.79
3 SPA. @ 14'-
51'-2 1
ABUTMENT #6 PLAN
F13
F12
TOP BOTTOM
F16 26 #5 @18"
F17 29 #6 @16"
TOP BOTTOM
F16 24 #5 @18"
F17 28 #6 @15"
ABUTMENT #6 STEEL DE
W17 11 #5 @18" EA. FACE
W16 1 #5 A.S. EA. FACE
W11 2 #5 @18" EA. FACE
W4 4 #5 @18" EA. FACE
W10 43 #6 @10"
W9 24 #5 @18" SPLICE W/F9 BARS
W13 1 #5 EA. FACE
W12 1 #5 EA. FACE
W14 4 #5 @18" EA. FACE
3'-1"
1'-1"
6'-0
1'-0
W15 1 #5 EA. FACE
F16
F17
F13
F9 24 #5 @18"
WINGWALL ELEVATION
A12 32 #6 @12"
SPLICE W/F9 BARS
A18 5 #5
F9 5 #5
F12
F16
F9 28 #5 @18"
ABUTMENT #6 ELEV

NOTE: BEARING PEDESTAL AND WALL ELEVATIONS ARE THEORETICAL BASED ON THE ORIGINAL PLANS AND MAY NEED TO BE ADJUSTED TO MEET EXISTING CONDITIONS. THE CONTRACTOR IS RESPONSIBLE FOR ANY ADJUSTMENTS AND PROPER FIT.

**FOR INFORMATION ONLY**

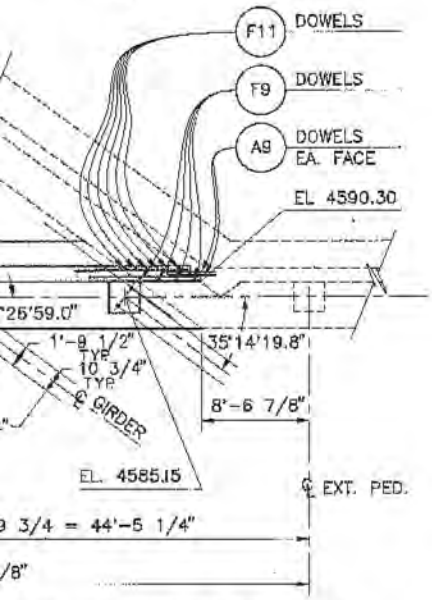


NOTE: EXP. BRGS REQ. @ ABUT #6

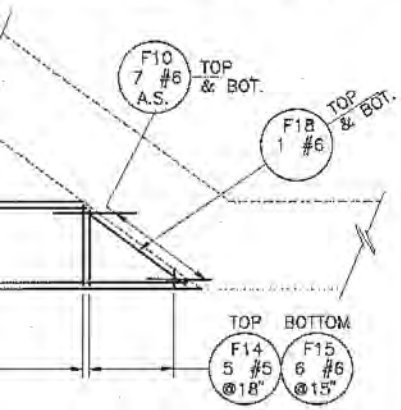


TAIL

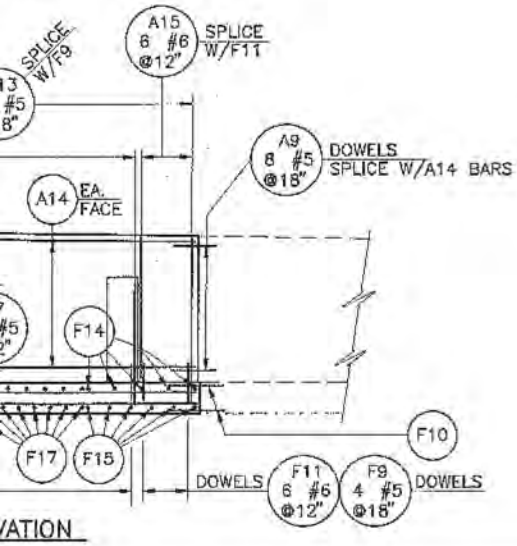


VATION

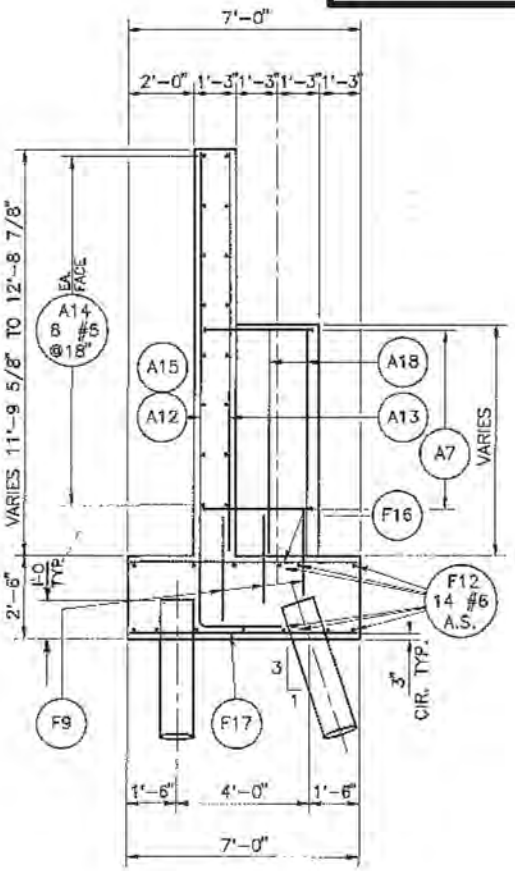


SECTION C–C

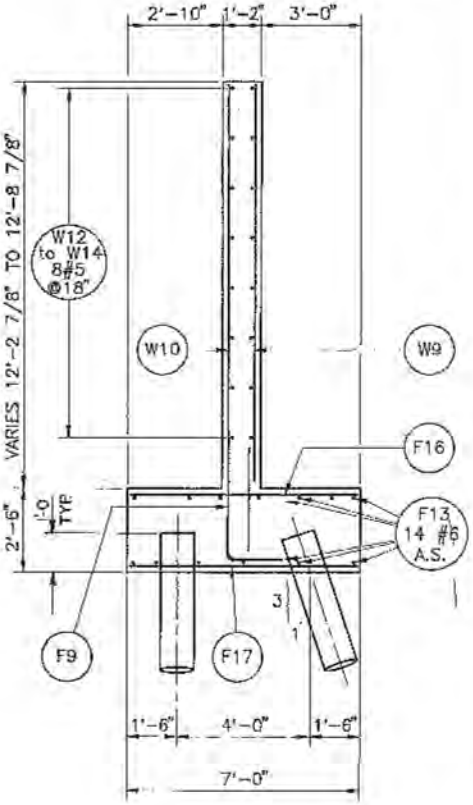


SECTION D–D

| CONCRETE QUANTITIES | |
|---|---|
| LOCATION | CU. YDS. |
| ABUTMENT WALL | 45.75 |
| PEDESTALS | 4.84 |
| FOOTINGS | 58.54 |
| TOTAL | 109.13 |

UTAH DEPARTMENT OF TRANSPORTATION
SALT LAKE CITY, UTAH
STRUCTURES DIVISION

LEHI MAIN STREET INTERCHANGE
I-15 N.B. OVER US-91 & UPRR
ABUTMENT #6 DETAILS

| | | | |
|---|---|---|---|
| DESIGN AOB 6-25-91 | CHECK CF 6-92 | | |
| DRAWN BJ 6-28-91 | CHECK AOB 8-16-91 | 143+89.44 | |
| CHANGE AOB 8-16-91 | CHECK CF 6-92 | STATION | |
| ORIGINAL RECORD 9/15/92 DATE | | UTAH | |
| APPROVED DATE | | ORIG. NO. | |
| IR-15-6(107)282 | | C-343W | |
| | | SHT 7 OF 19 | |

| NO. | BY | DATE | REMARKS |
|---|---|---|---|
| 1 | BMC | 9-7-92 | |

REVISIONS

FILE: SSSTR7.DWG 1:80 DR06 6-18-92

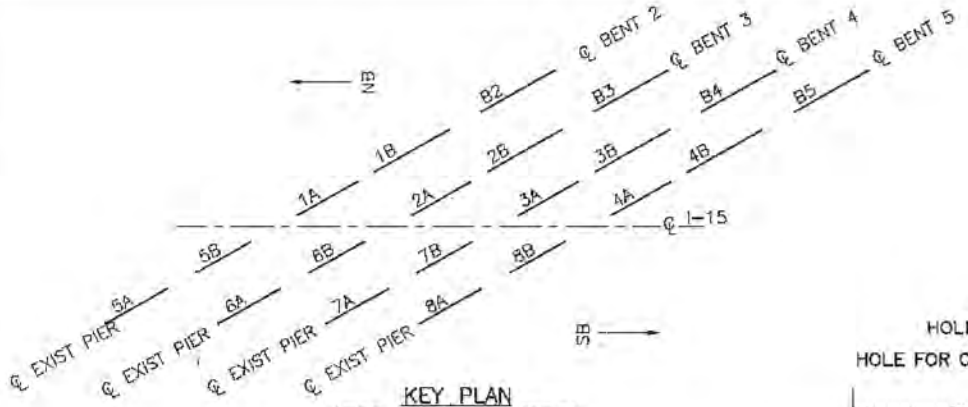


KEY PLAN
(FOR EXISTING PIERS)

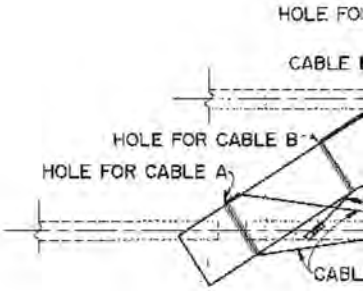


TYPICAL PLAN OF
(SHOWI
PIERS
BENTS

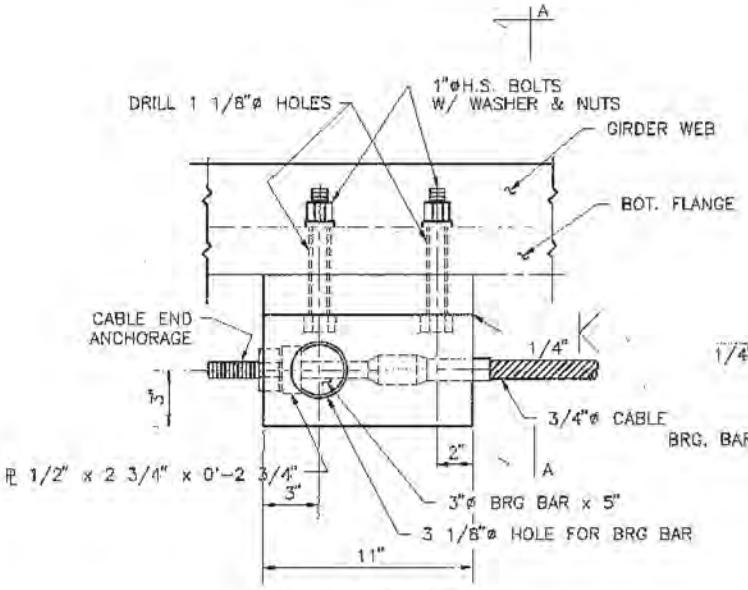


BRACKET ELEVATION

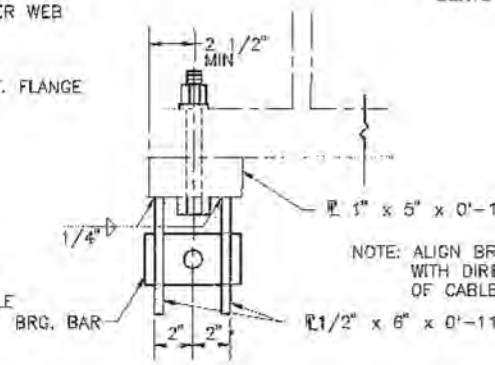


SECTION AA

BRACKET DETAILS

3/4
TOP

CHIP SMO
4" RADIUS

2" CO

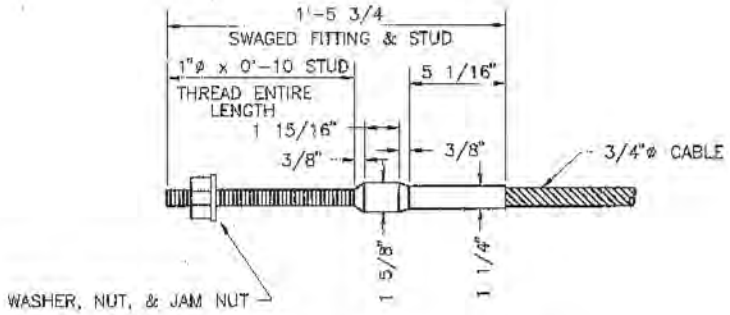


CABLE END ANCHORAGE

| AMBIENT TEMP. OF. | NO. OF TURN | | |
|---|---|---|---|
| | PIER 1&5 & B2 | PIER 2&6 & B3 | |
| 0 | 0 | 0 | |
| 50 | 3 1/2 | 0 | |
| 100 | 7 | 0 | |

**FOR INFORMATION ONLY**

02-MAY-2005 DGN Files: P:\Projects\1672\4433\C-049W-09\Forum\Fixdon

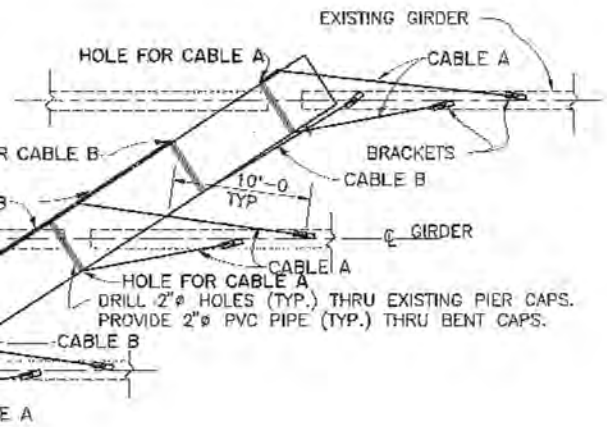


EXISTING PIER OR NEW BENT
NG CABLE LAYOUT
1,5,2,6,3 & 7 &
2,3, & 4 ONLY)

NOTE: SEISMIC RETROFIT REQUIRED AT EXISTING PIERS 1,5,2,6,3 & 7 AND NEW BENTS 2,3, & 4 ONLY.

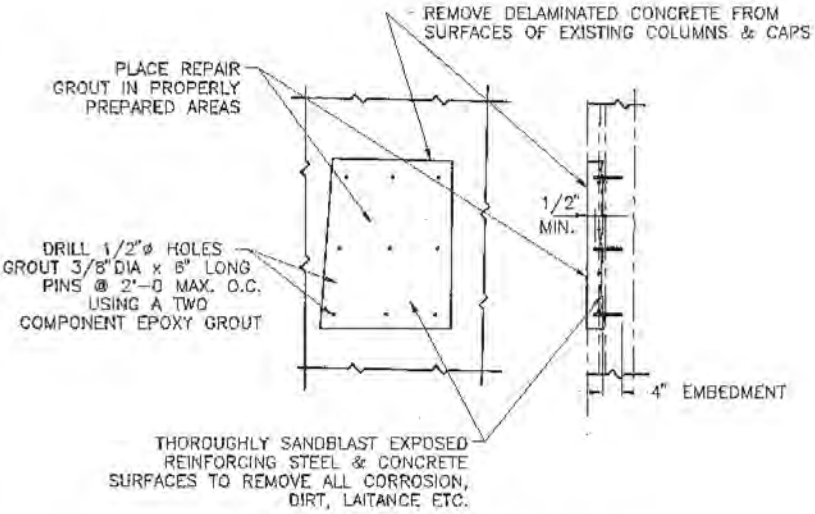


TYPICAL DELAMINATION REPAIR

NOTE: DELAMINATION REPAIRS WILL BE REQUIRED ON TOP, SIDES, AND BOTTOM OF EXISTING PIER CAPS INCLUDING PERIMETER OF PEDESTALS AND ON SIDES OF COLUMNS.

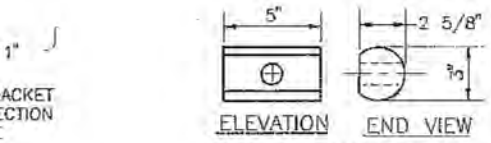


BEARING BAR DETAILS

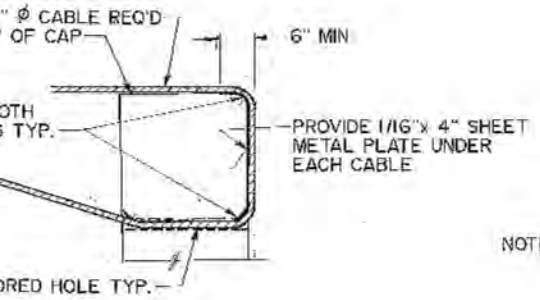


DETAIL A

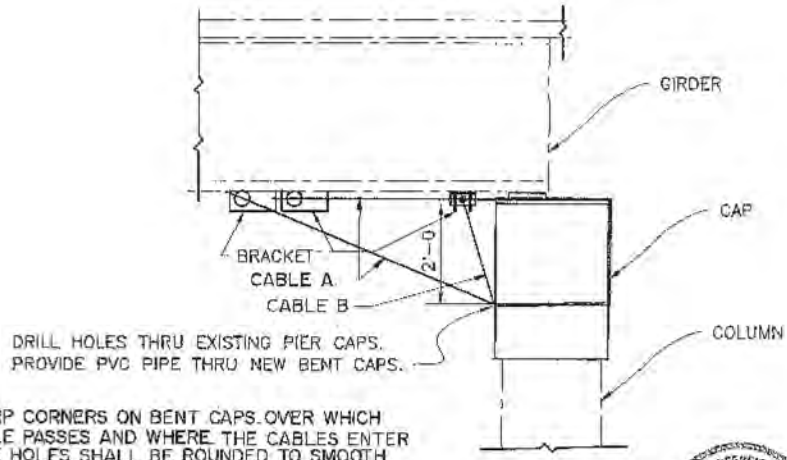


ELEVATION

NOTE: ALL SHARP CORNERS ON BENT CAPS OVER WHICH THE CABLE PASSES AND WHERE THE CABLES ENTER OR LEAVE HOLES SHALL BE ROUNDED TO SMOOTH SURFACES. SHEET METAL SHALL BE PLACED UNDERNEATH EACH CABLE OVER THE ROUNDED CORNERS. SEE DETAIL A. SHEET METAL PLATES, DRILLED HOLES AND CLIPPED SMOOTH ROUNDED SURFACES 4" RADIUS SHALL BE INCLUDED IN COST OF "CABLE RESTRAINT AND ANCHORAGE.

| S |
|---|
| PIER 3&7 & B4 |
| 0 |
| 5 1/4 |
| 5 1/2 |

* INTERPOLATE NO. OF TURNS

NOTE: THE ANCHOR NUTS SHALL BE TORQUED TO 20 FT. LBS, THEN REVERSE THE ANCHOR NUTS THE NUMBER OF TURNS SHOWN IN THE TABLE.

| NO. | BY | DATE | REMARKS |
|---|---|---|---|
| | | | |
| | | | |
| | | | |

REVISIONS

UTAH DEPARTMENT OF TRANSPORTATION
SALT LAKE CITY, UTAH
STRUCTURES DIVISION

LEHI MAIN STREET INTERCHANGE
I-15 N.B. WIDENING OVER US-91 & UPRR
SEISMIC RETROFIT & DELAMINATION REPAIR DETAILS

| | | | |
|---|---|---|---|
| DESIGN AOB 10-7-9 | CHECK CF 6-92 | | |
| DRAWN BJ 8-12-9 | CHECK AOB 8-19-9 | 143+89.44 | |
| QUANT AOB 10-7-9 | CHECK CF 6-92 | STATION | |
| APPROVAL RECOMM. 9/15/92 DATE | ASSIST. TRAFFIC | UTAH COUNTY | |
| APPROVED DATE | CHIEF STRUCTURAL ENGR. | DRG. NO. C-343W | |
| IR-15-6(107)282 PROJECT NUMBER | | SHT 8 OF 19 | |

FILE: SSTRUC30.DWG 1:20 DROS 8-24-92

| BENT | DIMENSIONS | | | | | | | | | |
|---|---|---|---|---|---|---|---|---|---|---|
| | A | B | C | D | E | F | G | H | J | CEN |
| #2 | 17'-2 1/2" | 34'-5" | 3'-2" | 40'-9" | 23'-0" | 8'-10 1/2" | 27'-8 5/8" | 27'-1 3/16" | 11 15/16" | 12 1/ |
| #3 | 16'-6 3/16" | 33'-0 3/8" | 3'-2 13/16" | 39'-6" | 22'-3" | 8'-7 1/2" | 27'-7 13/16" | 27'-1 3/16" | 11 1/2" | 11 9/ |
| #4 | 15'-10 3/8" | 31'-8 3/4" | 3'-3 1/8" | 38'-3" | 21'-6" | 8'-4 1/2" | 27'-3 5/8" | 26'-9 3/8" | 11 1/16" | 11 1 |
| #5 | 15'-3 7/8" | 30'-7 3/4" | 3'-2 1/8" | 37'-0" | 20'-9" | 8'-1 1/2" | 26'-9 15/16" | 26'-4 3/16" | 10 5/8" | 10 11 |

| BENT | ELEVATIONS | | | | | | | |
|---|---|---|---|---|---|---|---|---|
| | a | b | c | d | e | f | g | h |
| #2 | 4587.76 | 4587.30 | 4586.83 | 4587.63 | 4587.17 | 4586.70 | 4583.22 | 4582.60 |
| #3 | 4587.60 | 4587.18 | 4586.76 | 4587.55 | 4587.13 | 4586.71 | 4583.15 | 4582.60 |
| #4 | 4587.27 | 4586.88 | 4586.50 | 4587.18 | 4586.79 | 4586.41 | 4582.80 | 4582.28 |
| #5 | 4586.70 | 4586.35 | 4586.00 | 4586.70 | 4586.35 | 4586.00 | 4582.33 | 4581.85 |

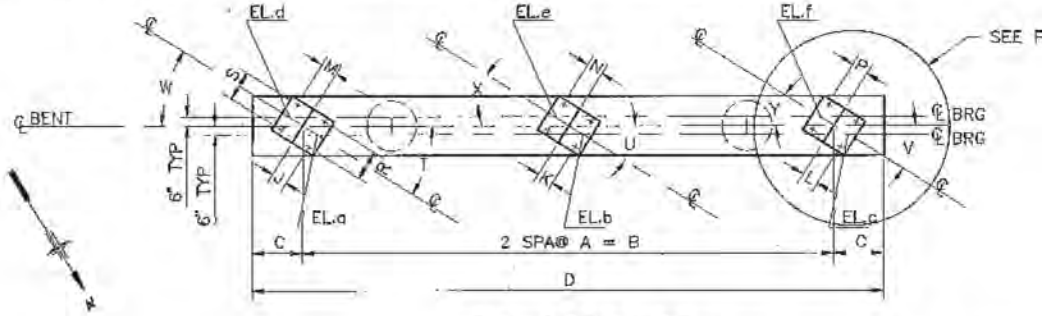


PLAN OF BENT CAP

NOTE: DISTANCE BETWEEN ANCHOR
FOR ALL GIRDERS ON SAME SIDE C

NOTE: BEARING
THEORETI
ORIGINAL
BE ADJUST
CONDITION
RESPONSIB
AND PROP

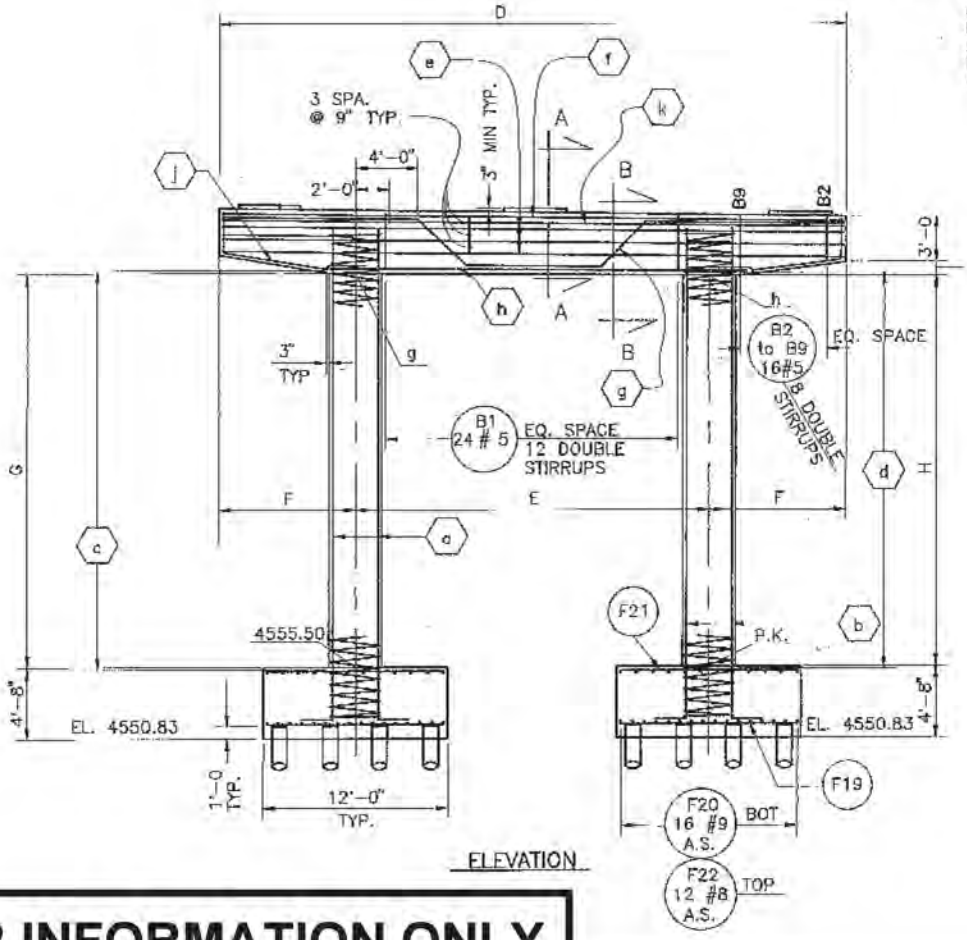


NOTE

NOTE

ELEVATION

**FOR INFORMATION ONLY**

| TERLINE BENT CAP TO CENTERLINE BEARING | | | | | DISTANCE BETWEEN ANCHOR BOLTS | | ANGLES | | | | | |
|---|---|---|---|---|---|---|---|---|---|---|---|---|
| | L | M | N | P | R | S | T | U | V | W | X | Y |
| 16" | 12 1/8" | 11 1/2" | 11 9/16" | 11 5/8" | 1'-9 | 2'-1 1/2 | 30°06'53.1" | 29°50'50.1" | 29°35'02.4" | 31°30'50.5" | 31°15'50.6" | 31°01'03.5" |
| 16" | 11 5/8" | 11 1/16" | 11 1/8" | 11 3/16" | 2'-1 | 1'-9 1/2 | 31°30'50.5" | 31°15'50.6" | 31°01'03.5" | 32°56'26.0" | 32°42'17.1" | 32°28'18.8" |
| 8" | 11 3/16" | 10 5/8" | 10 11/16" | 10 3/4" | 1'-9 | 1'-9 1/2 | 32°56'26.0" | 32°42'17.1" | 32°28'18.8" | 34°19'24.3" | 34°05'52.5" | 33°52'30.1" |
| /16" | 10 3/4" | 10 5/16" | 10 3/8" | 10 3/8" | 1'-9 | 1'-9 | 34°19'24.3" | 34°05'52.5" | 33°52'30.1" | 35°39'46.2" | 35°26'59.0" | 35°14'19.8" |

| Bent | (a) | (b) | (c) | (d) | (e) | (f) | (g) | (h) | (j) | (k) |
|---|---|---|---|---|---|---|---|---|---|---|
| #2 | C1-19#11 A.S. | C2-19#11 A.S. | C9-1#4 A.S. | C10-1#4 A.S. | B12-3#5 EA.FACE | B16-4#11 | B20-2#11 | B24-4#11 | B28-4#5 | B10-4#11 |
| #3 | C3-19#11 A.S. | C4-19#11 A.S. | C11-1#4 A.S. | C12-1#4 A.S. | B13-3#5 EA.FACE | B17-4#11 | B21-2#11 | B25-4#11 | B29-4#5 | B11-4#11 |
| #4 | C5-19#11 A.S. | C6-19#11 A.S. | C13-1#4 A.S. | C14-1#4 A.S. | B14-3#5 EA.FACE | B18-4#11 | B22-2#11 | B26-4#11 | B30-4#5 | B32-4#11 |
| #5 | C7-19#11 A.S. | C8-19#11 A.S. | C15-1#4 A.S. | C16-1#4 A.S. | B15-3#5 EA.FACE | B19-4#11 | B23-2#11 | B27-4#11 | B31-4#5 | B33-4#11 |

NOTE: SEE SHEET 13 FOR LOCATION OF FIXED BRGS & EXP. BRGS.

PEDESTAL DETAIL

BOLTS IS TYP.
F CAP.

PEDESTAL ELEVATIONS ARE
CAL BASED ON THE
PLANS AND MAY NEED TO
TED TO MEET EXISTING
S. THE CONTRACTOR IS
BLE FOR ANY ADJUSTMENTS
ER FIT.

B2 TO B9 SPACE
AT 9 1/2" MAX.

EXTEND SPIRAL REINFORCEMENT 3'-0" INTO CAP AND FTG. TYPICAL. SPIRAL REINF. MAY BE SPLICED IN THE MIDDLE HALF OF THE COLUMN HEIGHT ONLY. SPLICE LENGTH OF 30 INCHES REQUIRED.

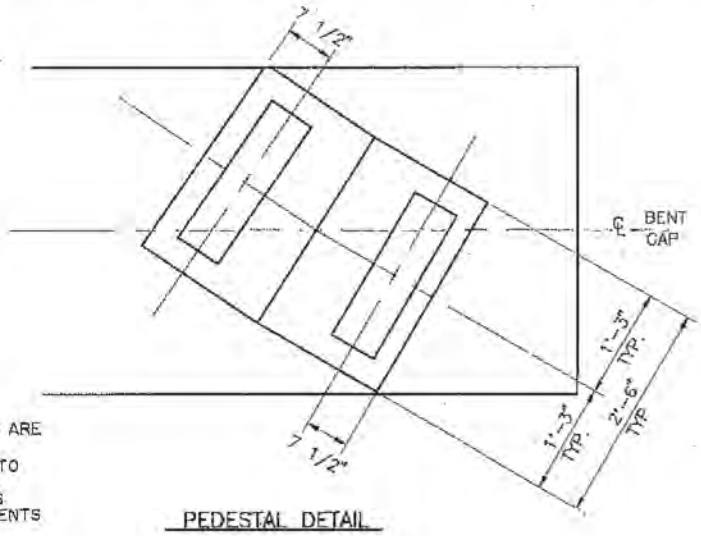


PEDESTAL DETAIL

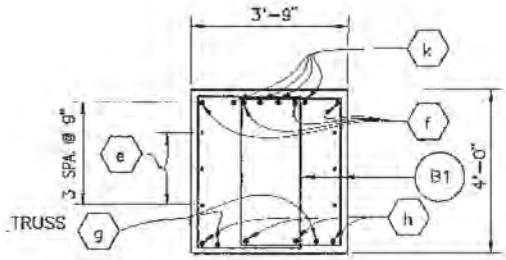


SECTION A-A

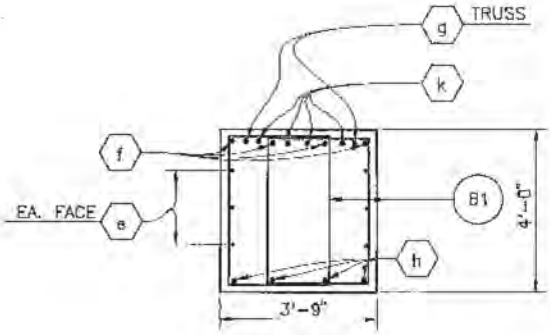


SECTION B-B

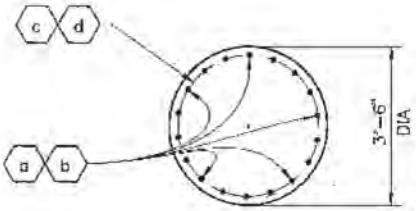


SECTION C-C

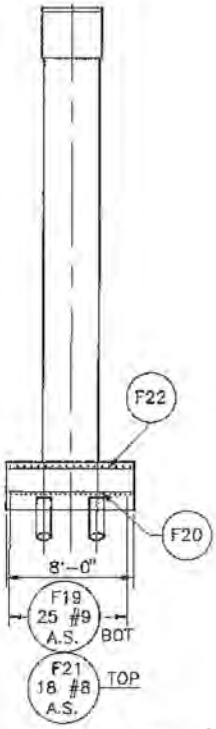


END ELEVATION

| CONCRETE QUANTITIES (CU. YDS.) | | | | |
|---|---|---|---|---|
| LOCATION | CAP | COLUMNS | FOOTINGS | BENT TOTAL |
| BENT #2 | 21.91 | 19.54 | 33.19 | 74.64 |
| BENT #3 | 21.24 | 19.51 | 33.19 | 73.94 |
| BENT #4 | 20.57 | 19.27 | 33.19 | 73.03 |
| BENT #5 | 19.92 | 18.95 | 33.19 | 72.06 |
| TOTAL | | | | 293.67 |

| NO. | BY | DATE | REVISIONS |
|---|---|---|---|
| 1 | BMC | 9-7-92 | |

UTAH DEPARTMENT OF TRANSPORTATION
SALT LAKE CITY, UTAH
STRUCTURES DIVISION

LEHI MAIN STREET INTERCHANGE
I-15 N.B. WIDENING OVER US-91 & UPRR
BENT DETAILS

| | | | |
|---|---|---|---|
| DESIGN AOB 7-8-91 | CHECK CF 6-92 | | |
| DRAWN BJ 9-4-91 | CHECK AOB 8-14-91 | | 143+89.44 |
| CHECK AOB 8-22-91 | CHECK CF 6-92 | | |
| APPROVAL RECOMM. | DATE | CHIEF ENGINEER | UTAH |
| APPROVED | DATE | DEPT. STRUCTURE ENGR. | DWG. NO. C-343W |
| IR-15-6(107)282 | | | SHT. 9 OF 19 |

REGISTERED PROFESSIONAL ENGINEER
ARLEN D. BRADSHAW
STATE OF UTAH

FILE: SSSTRB.DWG 1:1 DRGB 6-24-92

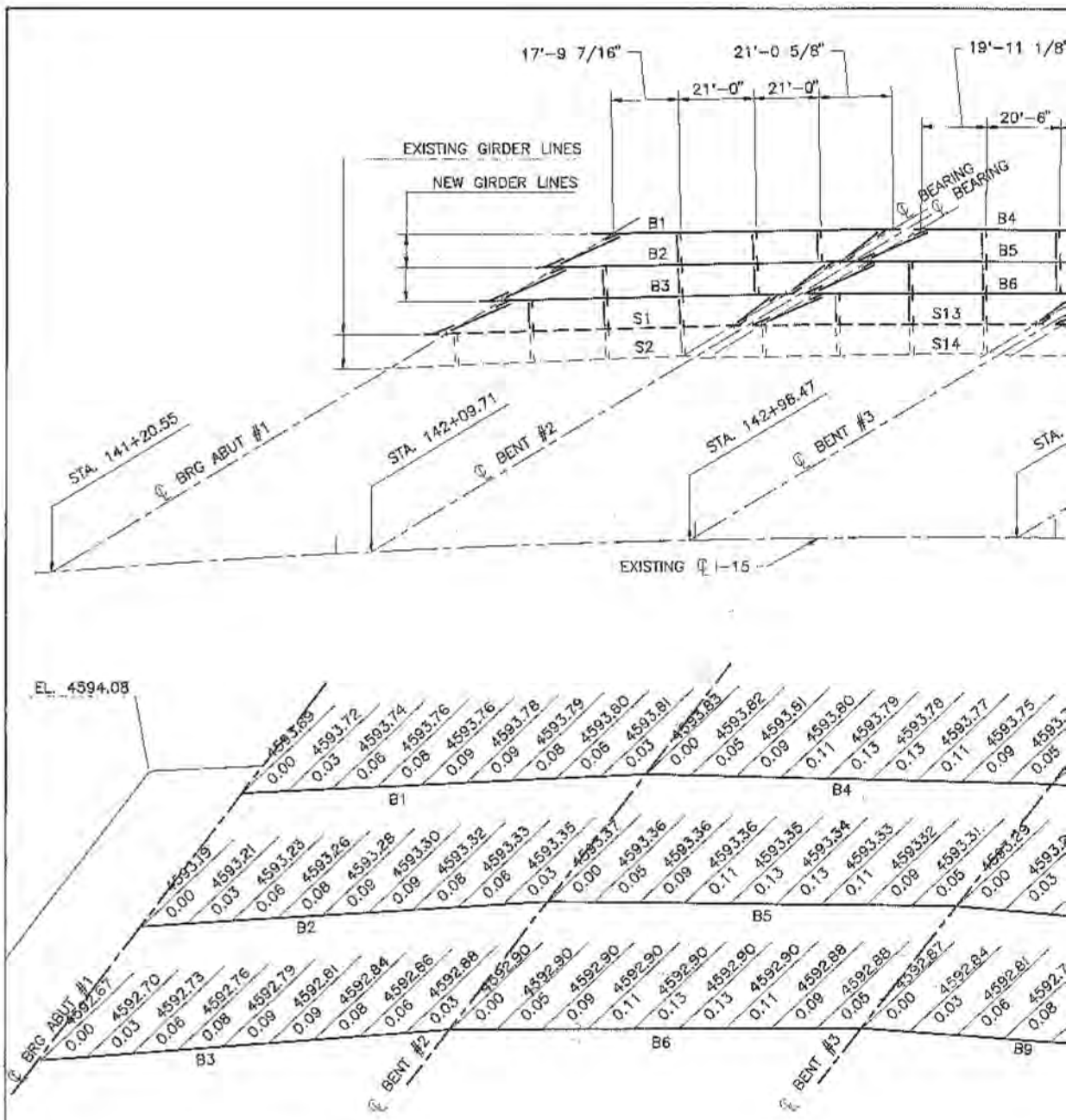


| SCREED SPACING | | | |
|---|---|---|---|
| GIRDER | NO. OF SPACES | SPACING | TOTAL |
| B1 | 9 | 9'-1 1/8"(-) | 81'-10" |
| B2 | 9 | 9'-2"(-) | 82'-5 15/16" |
| B3 | 9 | 9'-2 7/8"(+) | 83'-1 15/16" |
| B4 | 9 | 9'-1 11/16"(-) | 82'-3 1/8" |
| B5 | 9 | 9'-2 1/2"(-) | 82'-10 1/4" |
| B6 | 9 | 9'-3 1/4"(+) | 83'-5 5/16" |
| B7 | 9 | 9'-5 3/8"(-) | 85'-0 3/8" |
| B8 | 9 | 9'-6 1/8"(-) | 85'-6 7/8" |
| B9 | 9 | 9'-6 13/16"(+) | 86'-1 7/16" |
| B10 | 8 | 9'-7 11/16"(+) | 77'-1 11/16" |
| B11 | 8 | 9'-8 3/8"(+) | 77'-7 1/16" |
| B12 | 8 | 9'-9 1/16"(-) | 78'-0 7/16" |
| B13 | 8 | 9'-11 7/8"(+) | 79'-11 1/4" |
| B14 | 8 | 10'-0 1/2"(+) | 80'-4 1/4" |
| B15 | 8 | 10'-1 3/16"(-) | 80'-9 1/4" |

| GIRDER SPACING | | | |
|---|---|---|---|
| LOCATION | NO. OF SPACES | SPACING | TOTAL |
| ℄ BRG. ABUT. #1 | 3 | 17'-11 11/16" | 53'-11 1 |
| ℄ BENT # 2 | 3 | 17'-2 1/2" | 51'-7 7 |
| ℄ BENT # 3 | 3 | 16'-6 3/16" | 49'-6 1 |
| ℄ BENT # 4 | 3 | 15'-10 3/8" | 47'-7 3 |
| ℄ BENT # 5 | 3 | 15'-3 7/8" | 45'-11 1 |
| ℄ BRG. ABUT. #6 | 3 | 14'-9 3/4" | 44'-5 1 |

NOTE:
GIRDER SPACING IS FOR 3 OUTSIDE BAYS ALONG ℄ BRG
ABUTMENTS AND ALONG ℄ OF BENTS.

02-MAY-2005 DGN Files IR PWFedewu\672\4433.C-049W-18_Formfoudon

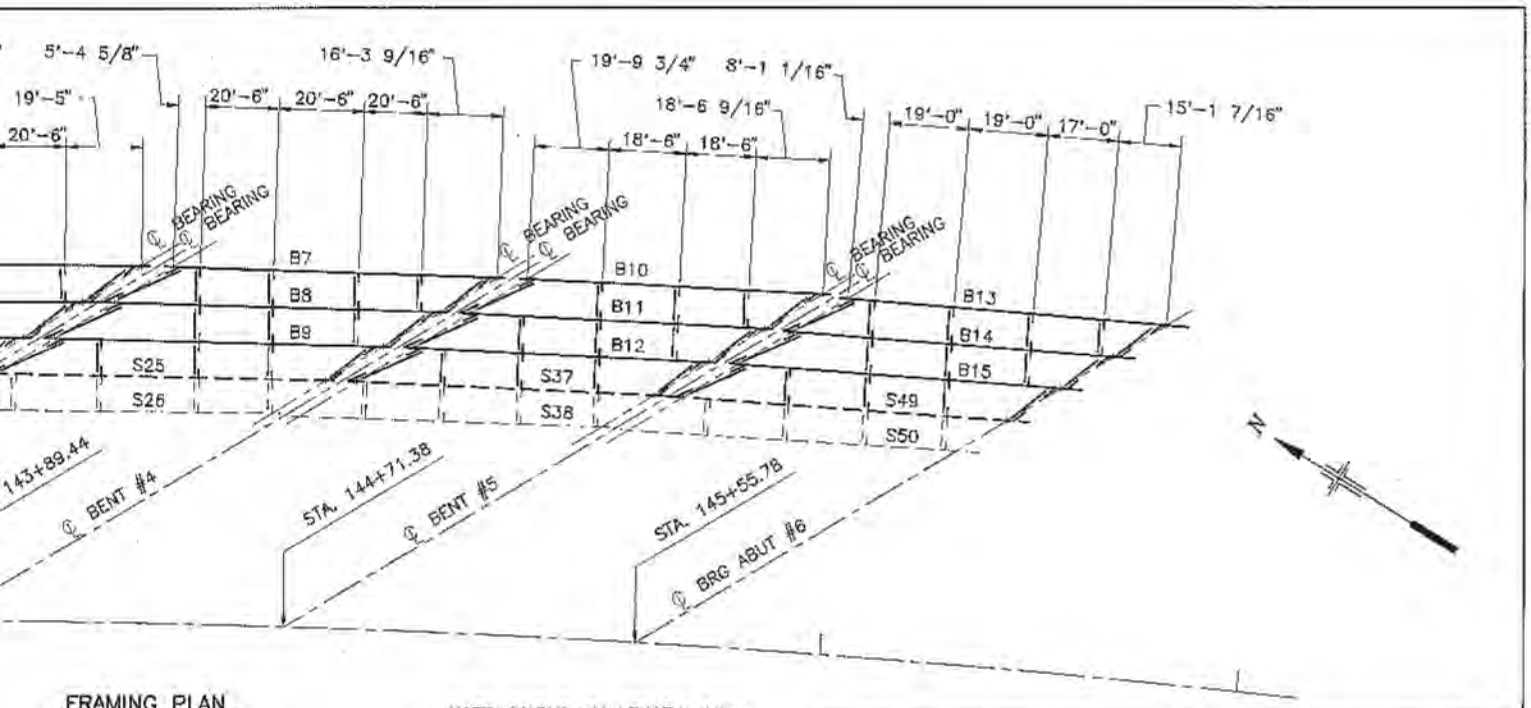


FRAMING PLAN

NOTE: DIAPHRAGM LENGTHS VARY.

**FOR INFORMATION ONLY**

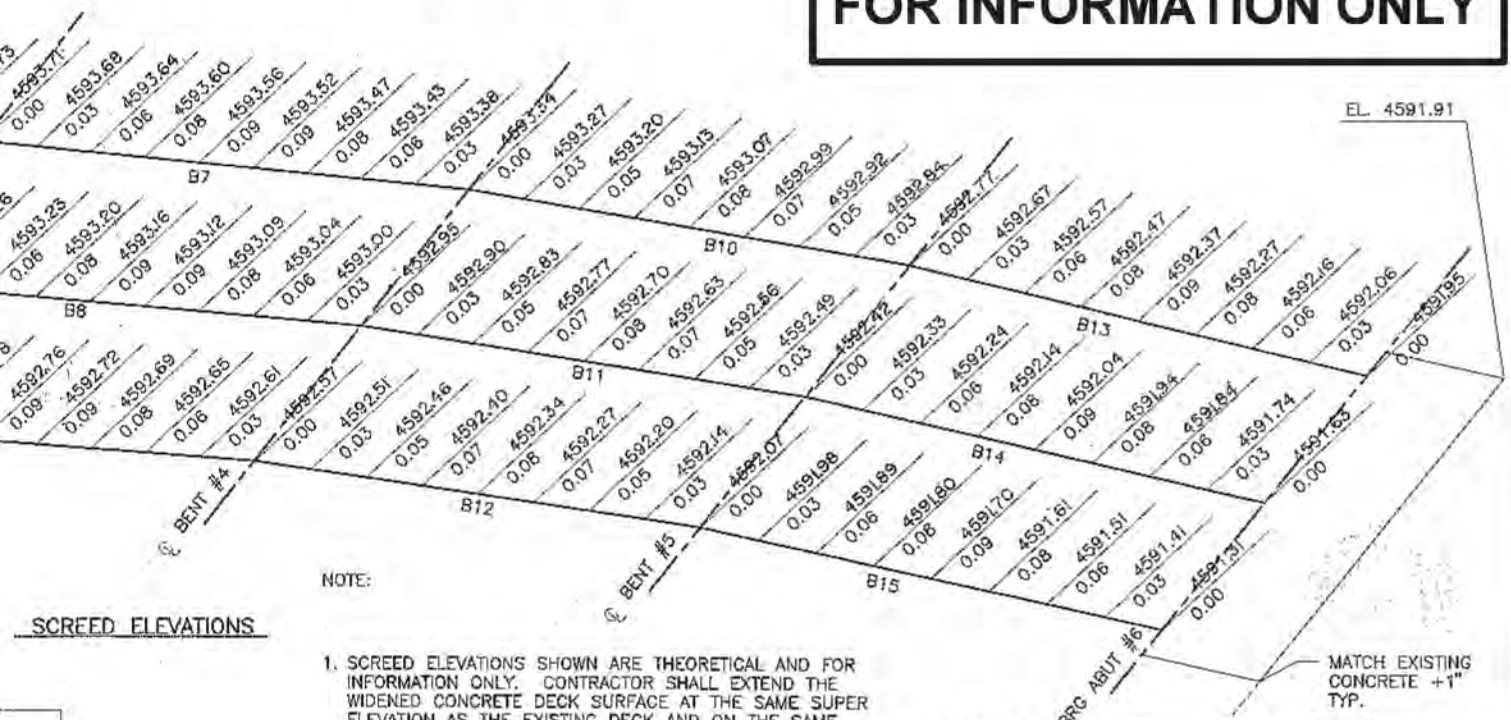


SCREED ELEVATIONS

NOTE:

1. SCREED ELEVATIONS SHOWN ARE THEORETICAL AND FOR INFORMATION ONLY. CONTRACTOR SHALL EXTEND THE WIDENED CONCRETE DECK SURFACE AT THE SAME SUPER ELEVATION AS THE EXISTING DECK AND ON THE SAME PLANE AS THE EXISTING CONCRETE DECK.
2. NUMBERS ABOVE THE LINE ARE TOP OF CONCRETE ELEVATIONS. NUMBERS BELOW THE LINE ARE DEAD LOAD DEFLECTIONS DUE TO THE DECK AND THESE NUMBERS MUST BE ADDED TO THE TOP OF CONCRETE ELEVATIONS TO OBTAIN THEORETICAL SCREED ELEVATIONS.
3. ALL ABUTMENTS AND BENTS ARE PARALLEL TO BRG. S 62° 39' 11.5" E.

| | |
|---|---|
| /16" | |
| /16" | |
| /2" | |
| /16" | |
| 1/16" | |
| /4" | |

. OF

REGISTERED PROFESSIONAL ENGINEER ARLIN O. BLOOMFIELD No. 1187 STATE OF UTAH

| No. | BY | DATE | REMARKS |
|---|---|---|---|
| 1 | BMC | 9-7-92 | |

REVISIONS

UTAH DEPARTMENT OF TRANSPORTATION
SALT LAKE CITY, UTAH
STRUCTURES DIVISION

LEHI MAIN STREET INTERCHANGE
I-15 N.B. WIDENING OVER US-91 & UPRR
FRAMING PLAN & SCREED DETAILS

| | | | |
|---|---|---|---|
| DESIGN AOB 6-11-91 | CHECK CF 6-92 | | |
| DRAWN BJ 8-10-91 | CHECK AOB 8-19-91 | 143+89.44 | |
| CHECK AOB 8-22-91 | CHECK CF 6-92 | LOCATION | |
| APPROVED REGION 9/15/92 DATE | REGION LEADER | UTAH COUNTY | |
| APPROVED DATE | DEPUTY STRUCTURAL ENGINEER | DRG. NO. C-343W | |
| IR-15-6(107)282 PROJECT NUMBER | | SHT 10 OF 19 | |

FILE: SSSTR9A.DWG 1:20 DRDS 6-21-92

NOTE:
SHEAR STUDS SHALL NOT BE PLACED WITHIN 2'-6" OF THE GIRDER ENDS AT ABUT. #1, BENT #3, BENT #5, AND ABUT #6 THE SHEAR STUDS OMITTED FROM THE GIRDER ENDS SHALL BE INTERSPERSED BETWEEN ADJACENT SHEAR STUDS.

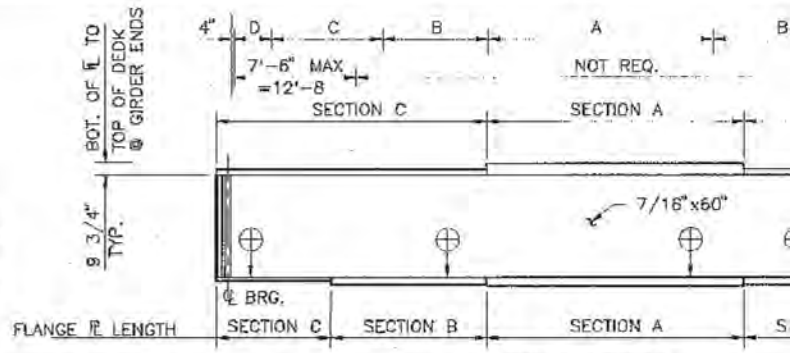


GIRDER ELEVATION
(SPAN 1,3,4,5)

| GIRDER | LENGTH C. to C. BRGS. | LENGTH OUT to OUT | BEARING OF GIRDER | WEB | SECTION A | |
|---|---|---|---|---|---|---|
| | | | | | TOP ℞ | BOT. ℞ |
| B1 | 80'-10 1/8" | 82'-2 1/8" | S32°32'18.4"E | 7/16"x60" | 3/4"x10"x30'-0" | 1 1/4"x16"x30 |
| B2 | 81'-5 7/8" | 82'-9 7/8" | S32°48'21.4"E | 7/16"x60" | 3/4"x10"x30'-0" | 1 1/4"x16"x30 |
| B3 | 82'-1 7/8" | 83'-5 7/8" | S33°04'09.1"E | 7/16"x60" | 3/4"x10"x30'-0" | 1 1/4"x16"x30 |
| B4 | 80'-4 1/8" | 81'-8 1/8" | S29°42'45.5"E | 5/8"x35" | 1 1/8"x18"x38'-0" | 2"x20"x38'- |
| B5 | 80'-11 1/8" | 82'-3 1/8" | S29°56'54.4"E | 5/8"x35" | 1 1/8"x18"x38'-0" | 2"x20"x38'- |
| B6 | 81'-6 1/8" | 82'-10 1/8" | S30°10'52.7"E | 5/8"x35" | 1 1/8"x18"x38'-0" | 2"x20"x38'- |
| B7 | 83'-2 1/4" | 84'-6 1/4" | S29°42'45.5"E | 7/16"x60" | 7/8"x10"x34'-0" | 1 1/2"x16"x34 |
| B8 | 83'-8 5/8" | 85'-0 5/8" | S29°56'54.4"E | 7/16"x60" | 7/8"x10"x34'-0" | 1 1/2"x16"x34 |
| B9 | 84'-3 1/8" | 85'-7 1/8" | S30°10'52.7"E | 7/16"x60" | 7/8"x10"x34'-0" | 1 1/2"x16"x34 |
| B10 | 75'-4 1/2" | 76'-8 1/2" | S28°19'47.2"E | 7/16"x60" | 5/8"x10"x76'-8 1/2" | 1"x16"x27'- |
| B11 | 75'-9 3/4" | 77'-1 3/4" | S28°33'19.0"E | 7/16"x60" | 5/8"x10"x77'-1 3/4" | 1"x16"x27'- |
| B12 | 76'-3" | 77'-7" | S28°46'41.4"E | 7/16"x60" | 5/8"x10"x77'-7" | 1"x16"x27'- |
| B13 | 79'-1" | 80'-5" | S26°59'25.3"E | 7/16"x60" | 5/8"x10"x80'-5" | 1 1/4"x16"x28 |
| B14 | 79'-5 7/8" | 80'-9 7/8" | S27°12'12.5"E | 7/16"x60" | 5/8"x10"x80'-9 7/8" | 1 1/4"x16"x28 |
| B15 | 79'-10 7/8" | 81'-2 7/8" | S27°24'51.7"E | 7/16"x60" | 5/8"x10"x81'-2 7/8" | 1 1/4"x16"x28 |

| STUD SPACING | | | | ℄ BEARING to END OF BEAM | | |
|---|---|---|---|---|---|---|
| A | B | C | D | | 0.1 X SPAN | 0.2 X SPAN |
| 18@16"=24'-0" | 14@14"=16'-4" | 10@13"=10'-10" | 2@7 9/16"(-)=1'-3 1/16" | 8" | 1/2 | 15/16 |
| 18@16"=24'-0" | 14@14"=16'-4" | 11@13"=11'-11" | 1@5 15/16"=5 15/16" | 8" | 1/2 | 15/16 |
| 18@16"=24'-0" | 14@14"=16'-4" | 11@13"=11'-11" | 1@9 15/16"=9 15/16" | 8" | 1/2 | 15/16 |
| 34@11"=31'-2" | 28@10"=23'-4" | ------- | 2@7 9/16"(-)=1'-3 1/16" | 8" | 13/16 | 1 1/2 |
| 34@11"=31'-2" | 29@10"=24'-2" | ------- | 1@8 9/16"=8 9/16" | 8" | 13/16 | 1 1/2 |
| 34@11"=31'-2" | 29@10"=24'-2" | ------- | 2@6"(+)=1'-0 1/16" | 8" | 13/16 | 1 1/2 |
| 18@16"=24'-0" | 14@14"=16'-4" | 11@13"=11'-11" | 2@8 1/16"=1'-4 1/8" | 8" | 9/16 | 1 |
| 18@16"=24'-0" | 14@14"=16'-4" | 12@13"=13'-0" | 1@6 5/16"=6 5/16" | 8" | 9/16 | 1 |
| 18@16"=24'-0" | 14@14"=16'-4" | 12@13"=13'-0" | 1@9 9/16"=9 9/16" | 8" | 9/16 | 1 |
| 30@15"=37'-6" | 10@14"=11'-8" | 6@13"=6'-6" | 1@9 1/4"=9 1/4" | 8" | 7/16 | 3/4 |
| 30@15"=37'-6" | 10@14"=11'-8" | 6@13"=6'-6" | 1@11 7/8"=11 7/8" | 8" | 7/16 | 3/4 |
| 30@15"=37'-6" | 10@14"=11'-8" | 6@13"=6'-6" | 2@7 1/4"=1'-2 1/2" | 8" | 7/16 | 3/4 |
| 6@16"=21'-4" | 13@14"=15'-2" | 12@13"=13'-0" | 1@8 1/2"=8 1/2" | 8" | 7/16 | 7/8 |
| 6@16"=21'-4" | 13@14"=15'-2" | 12@13"=13'-0" | 1@10 15/16"=10 15/16" | 8" | 7/16 | 7/8 |
| 6@16"=21'-4" | 13@14"=15'-2" | 12@13"=13'-0" | 1@13 7/16"=13 7/16" | 8" | 7/16 | 7/8 |

DGN Files: PW_Pedestal1672\4433-C-049W-11-Terminus.dgn
02-MAY-2005

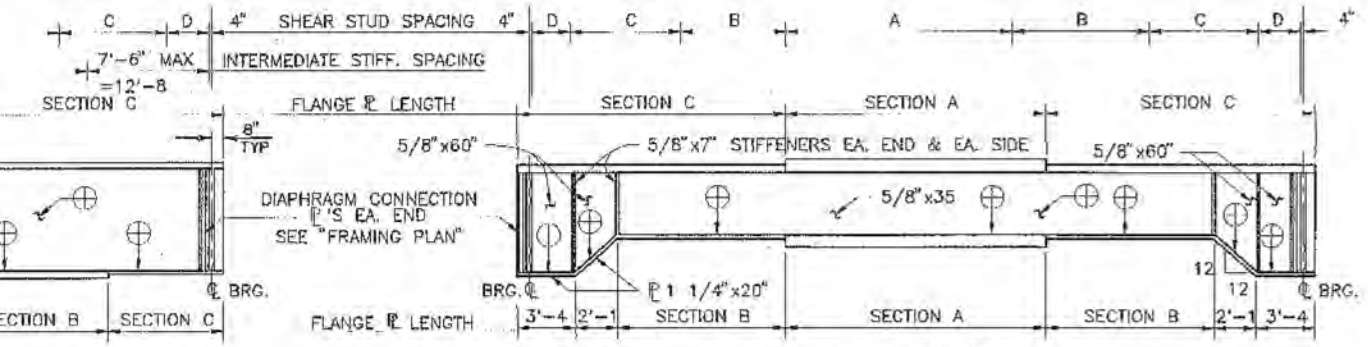


GIRDER ELEVATION
(SPAN 2)

| | SECTION B | | SECTION C | | STIFFENER SPACING |
|---|---|---|---|---|---|
| | TOP ℙ | BOT. ℙ | TOP ℙ | BOT. ℙ | |
| '-0" | ------ | 1"x16"x10'-6" | 5/8"x10"x26'-1 1/16" | 3/4"x16"x15'-7 1/16" | 2 SPA @ 7'-6" MAX = 12'-8" MAX |
| '-0" | ------ | 1"x16"x10'-6" | 5/8"x10"x26'-4 15/16" | 3/4"x16"x15'-10 15/16" | 2 SPA @ 7'-6" MAX = 12'-8" MAX |
| '-0" | ------ | 1"x16"x10'-6" | 5/8"x10"x26'-8 15/16" | 3/4"x16"x16'-2 15/16" | 2 SPA @ 7'-6" MAX = 12'-8" MAX |
| 0" | ------ | 1 1/2"x20"x16'-5 1/8" | 7/8"x18"x21'-10 1/16" | SEE GIRDER DETAIL | NOT REQ. |
| 0" | ------ | 1 1/2"x20"x16'-8 9/16" | 7/8"x18"x22'-1 9/16" | SEE GIRDER DETAIL | NOT REQ. |
| 0" | ------ | 1 1/2"x20"x17'-0 1/16" | 7/8"x18"x22'-5 1/16" | SEE GIRDER DETAIL | NOT REQ. |
| '-0" | ------ | 1"x16"x10'-0" | 5/8"x10"x25'-3 1/8" | 3/4"x16"x15'-3 1/8" | 2 SPA @ 7'-6" MAX = 12'-8" MAX |
| '-0" | ------ | 1"x16"x10'-0" | 5/8"x10"x25'-6 5/16" | 3/4"x16"x15'-6 5/16" | 2 SPA @ 7'-6" MAX = 12'-8" MAX |
| '-0" | ------ | 1"x16"x10'-0" | 5/8"x10"x25'-9 9/16" | 3/4"x16"x15'-9 9/16" | 2 SPA @ 7'-6" MAX = 12'-8" MAX |
| 0" | ------ | ------ | ------ | 3/4"x16"x24'-10 1/4" | 2 SPA @ 7'-6" MAX = 12'-8" MAX |
| 0" | ------ | ------ | ------ | 3/4"x16"x25'-0 7/8" | 2 SPA @ 7'-6" MAX = 12'-8" MAX |
| 0" | ------ | ------ | ------ | 3/4"x16"x25'-3 1/2" | 2 SPA @ 7'-6" MAX = 12'-8" MAX |
| '-0" | ------ | 1"x16"x10'-6" | ------ | 3/4"x16"x15'-8 1/2" | 2 SPA @ 7'-6" MAX = 12'-8" MAX |
| '-0" | ------ | 1"x16"x10'-6" | ------ | 3/4"x16"x15'-10 15/16" | 2 SPA @ 7'-6" MAX = 12'-8" MAX |
| '-0" | ------ | 1"x16"x10'-6" | ------ | 3/4"x16"x16'-1 7/16" | 2 SPA @ 7'-6" MAX = 12'-8" MAX |

| CAMBER (IN) | | | GIRDER |
|---|---|---|---|
| 0.3 X SPAN | 0.4 X SPAN | 0.5 X SPAN | |
| 1 5/16 | 1 1/2 | 1 9/16 | B1 |
| 1 5/16 | 1 1/2 | 1 9/16 | B2 |
| 1 5/16 | 1 1/2 | 1 9/16 | B3 |
| 2 | 2 3/8 | 2 7/16 | B4 |
| 2 | 2 3/8 | 2 7/16 | B5 |
| 2 | 2 3/8 | 2 7/16 | B6 |
| 1 3/8 | 1 5/8 | 1 11/16 | B7 |
| 1 3/8 | 1 5/8 | 1 11/16 | B8 |
| 1 3/8 | 1 5/8 | 1 11/16 | B9 |
| 1 1/16 | 1 1/4 | 1 5/16 | B10 |
| 1 1/16 | 1 1/4 | 1 5/16 | B11 |
| 1 1/16 | 1 1/4 | 1 5/16 | B12 |
| 1 3/16 | 1 3/8 | 1 7/16 | B13 |
| 1 3/16 | 1 3/8 | 1 7/16 | B14 |
| 1 3/16 | 1 3/8 | 1 7/16 | B15 |

## GENERAL STEEL NOTES

1. ALL STRUCTURAL STEEL SHALL BE AASHTO M270 GRADE 36.
2. BEARING STIFFENERS AT GIRDER ENDS ARE 1– ℙ 5/8" x 7" ON EACH SIDE OF WEB. DIAPHRAGM CONNECTION PLATES AT GIRDER ENDS ARE 3/8" x 9". SEE "FRAMING PLAN."
3. INTERMEDIATE DIAPHRAGM STIFFENERS ARE 1– ℙ 3/8" x 6 ON EACH SIDE OF WEB ON INTERIOR GIRDERS AND ON INSIDE FACE ONLY OF EXTERIOR GIRDERS, SEE "FRAMING PLAN."
4. CHARPY V–NOTCH TOUGHNESS TEST SHALL BE PERFORMED ON ALL WEB & SPLICE PLATES. OTHER TENSILE MAIN LOAD CARRYING MEMBERS TO BE TESTED SHALL BE INDICATED BY (J) (SERVICE TEMPERATURE ZONE–2)
5. FOR WELDING DETAILS, WELDING SPECIFICATIONS AND GIRDER DETAILS, SEE "STEEL DETAILS."
6. FOR DIAPHRAGMS & SHEAR CONNECTORS, SEE "STEEL DETAILS."
7. INTERMEDIATE STIFFENERS ARE 1– ℙ 3/8" X 4 1/2". PLACE INTERMEDIATE STIFFENERS ON INSIDE FACE ONLY OF EXTERIOR GIRDER ONLY, SEE "FRAMING PLAN."
8. ALL DIMENSIONS SHOWN ARE HORIZONTAL, LENGTHS IN FABRICATION SHALL TAKE VERTICAL GRADE INTO ACCOUNT.

| NO | BY | DATE | REMARKS |
|---|---|---|---|
| | | | |
| | | | |
| | | | |

REVISIONS

FOR INFORMATION ONLY

REGISTERED PROFESSIONAL ENGINEER
ARLIN O. BLOOMFIELD
NO. 3161
STATE OF UTAH

UTAH DEPARTMENT OF TRANSPORTATION
SALT LAKE CITY, UTAH
STRUCTURES DIVISION

LEHI MAIN STREET INTERCHANGE
I–15 N.B. WIDENING OVER US–91 & UPRR
GIRDER DETAILS

| | | | |
|---|---|---|---|
| DESIGN AOB 8-3-91 | DSGN CK CF 6-92 | | |
| DRAWN BJ 7-29-91 | CHECK AOB 8-12-91 | 143+89.44 | |
| CHKD AOB 8-22-91 | CHK CK CF 6-92 | STATION | |
| APPROVAL RECOMM. 9/15/92 DATE | ENGRS LEADER | UTAH COUNTY | |
| APPROVED DATE | CHIEF STRUCTURAL ENGR | DRG. NO. C-343W | |
| IR-15-6(107)282 PROJECT NUMBER | | SHT 11 OF 19 | |

FILE: SSSTR10.DWG DRD7 5-18-92

FOR INFORMATION ONLY

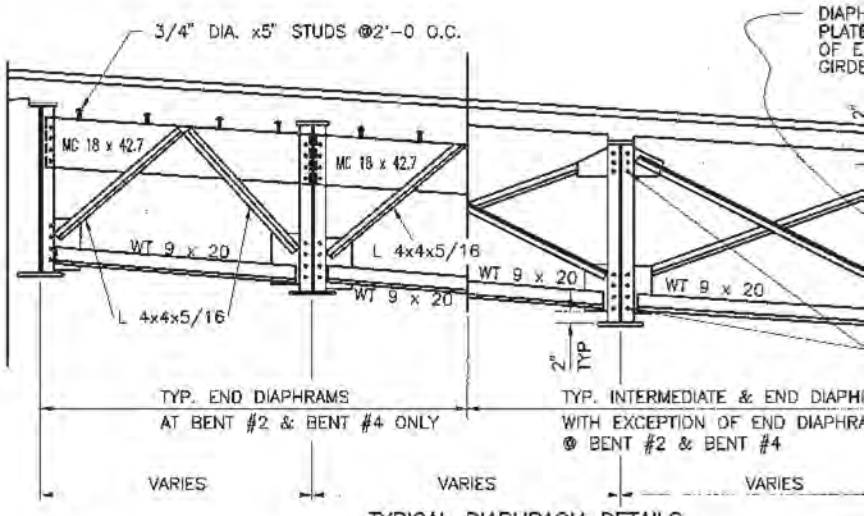


TYPICAL DIAPHRAGM DETAILS

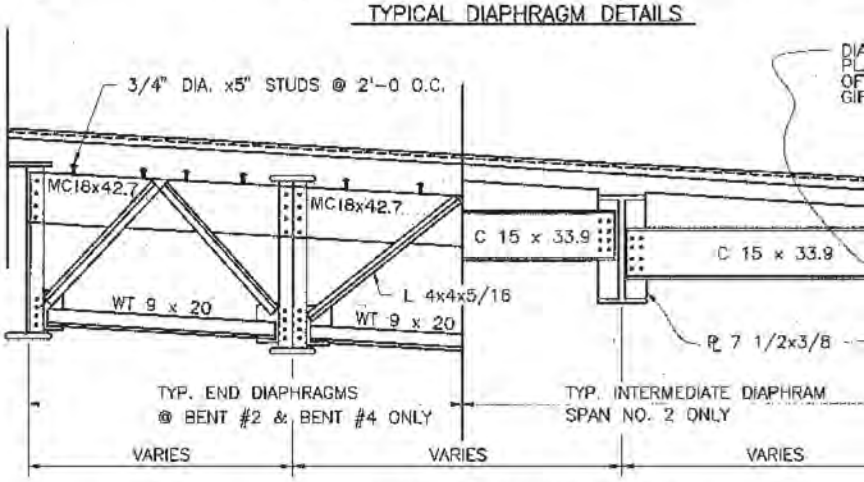


TYPICAL DIAPHRAGM DETAILS

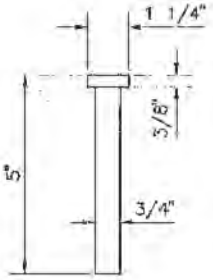


STUD DIMENSIONS

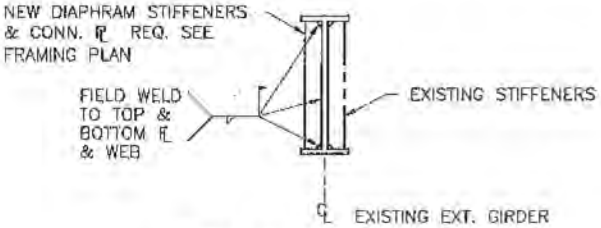


DETAIL @ EXISTING EXT. GIRDER

## STUD NOTE

STUD TYPE SHEAR CONNECTORS SHALL BE HEADED ANCHOR STUDS CONFORMING TO THE DIMENSIONS SHOWN ON THE PLANS. THEY SHALL BE MANUFACTURED FROM STEEL CONFORMING TO THE REQUIREMENTS OF AASHTO M169. STUDS SHALL BE AUTOMATICALLY END WELDED IN THE SHOP OR FIELD WITH EQUIPMENT DESIGNED FOR STUD WELDING OPERATIONS. EQUIPMENT CAPACITY SHALL BE ADEQUATE FOR THE SIZE OF STUD BEING WELDED.

## NOTES

1. ALL STIFFENER PLATES SHALL BE PLACED NORMAL TO WEB.
2. ALL FIELD CONNECTIONS SHALL BE MADE WITH 7/8"ø HIGH STRENGTH BOLTS, ASTM A-325. 15/16"ø HOLES REQ'D.
3. GUSSET PLATES SHALL BE BENT AS REQ'D FOR SKEW ANGLE.

DGN Files IP PWPubns\16721\4433.C-049W-12_Formfoudon
02-MAY-2005

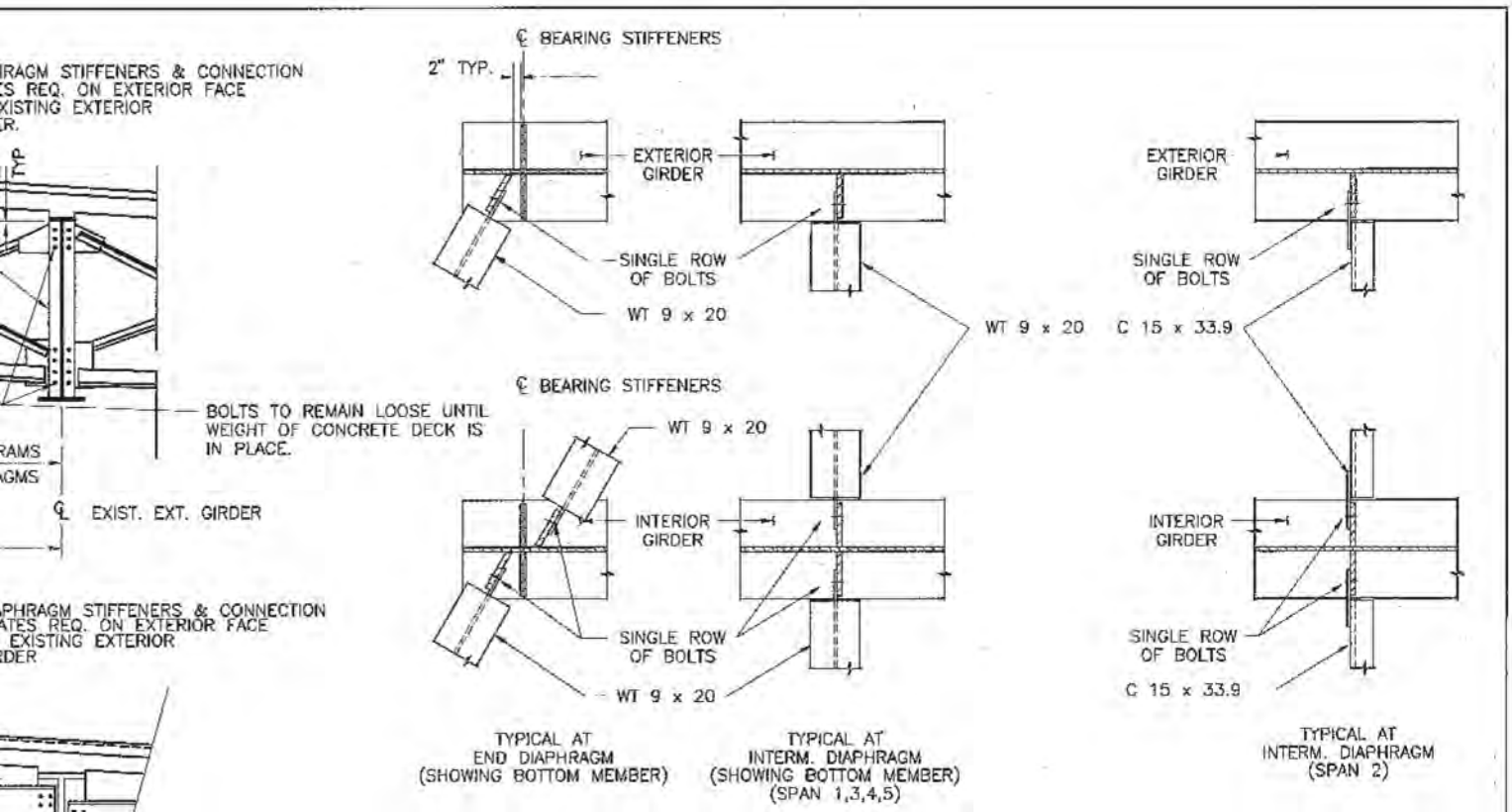


DIAPHRAGM CONNECTION DETAILS

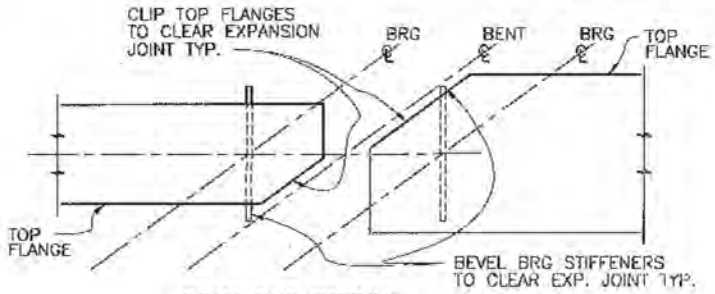


BEAM END DETAILS
(BENT #2 & BENT #4 ONLY)

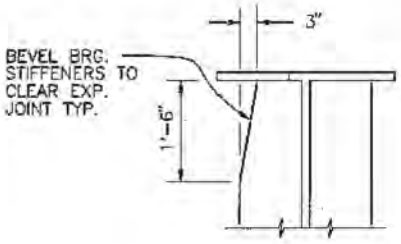


BEAM END DETAILS
(BENT #2 & BENT #4 ONLY)

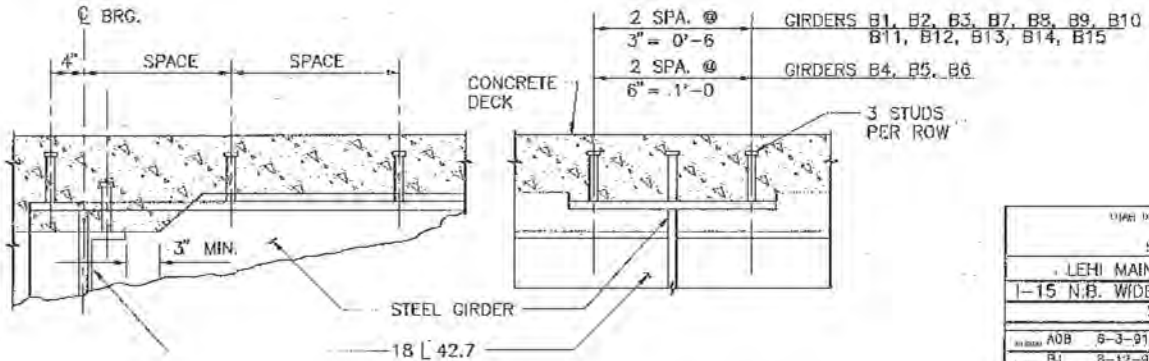


SHEAR CONNECTOR DETAIL

| | | | |
|---|---|---|---|
| 1 | BMC | 9-7-92 | |
| NO. | BY | DATE | REMARKS |

REVISIONS

UTAH DEPARTMENT OF TRANSPORTATION
DIVISION OF WTM
STRUCTURES DIVISION

LEHI MAIN STREET INTERCHANGE
I-15 N.B. WIDENING OVER US-91 & UPRR
STEEL DETAILS

| | | | | |
|---|---|---|---|---|
| DESIGNED AOB 6-3-91 | CHECKED | | | 143:89.44 |
| DRAWN BJ 8-12-9 | CHECKED AOB 8-19-9 | | | |
| COMP AOB 8-22-9 | CHECKED | | | |
| APPROVAL RECOMM. | | | | UTAH |
| APPROVED | | | | DRG. NO. C-343W |
| IR-15-6(107)282 | | | | SHT 12 OF 19 |

FILE: SSSTR11.DWG DROS 8-4-92

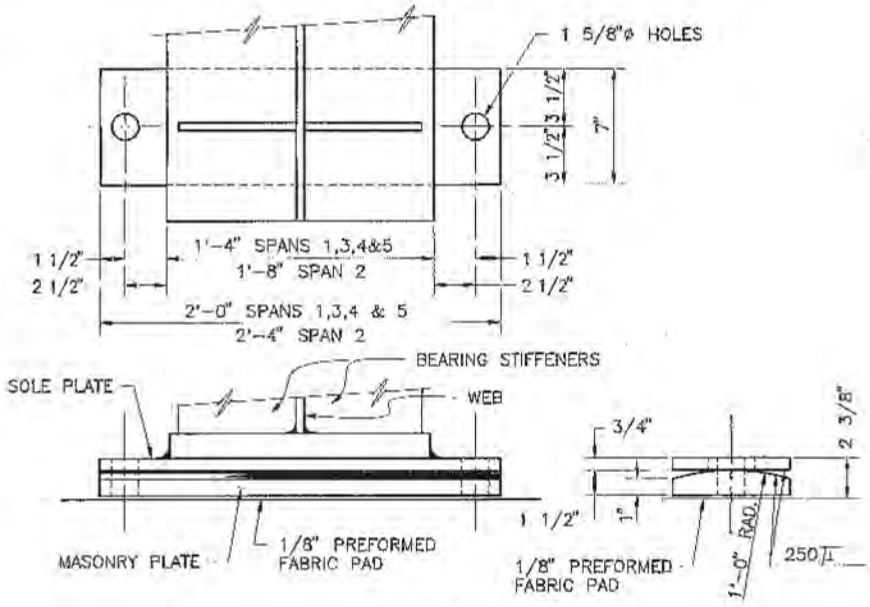


DETAIL OF FIXED BEARING

(FIXED BRGS ARE REQ. @ BENT 2 SPAN 1, BENT 3 SPAN 2, BENT 4 SPAN 3, BENT 5 SPAN 4 & BENT 5 SPAN 5)

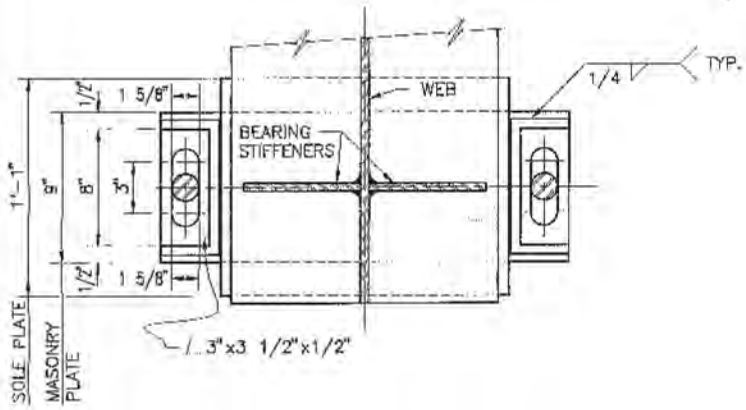


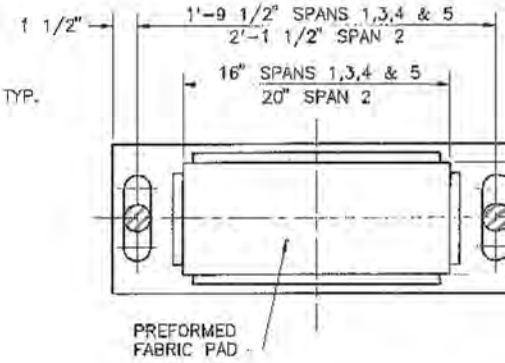


PLAN OF MASONRY PLATE

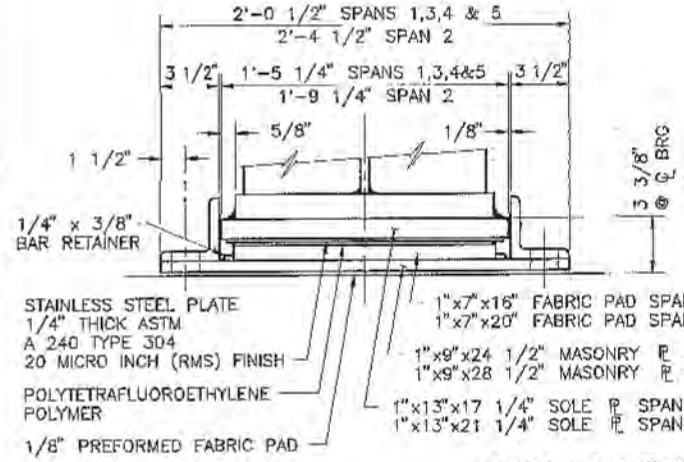


DETAIL OF EXPANSION BEARING

(EXP. BRGS ARE REQ. @ ABUT. 1, BENT 2 SPAN 2, BENT 3 SPAN 3, BENT 4 SPAN 4 & ABUT. 6)

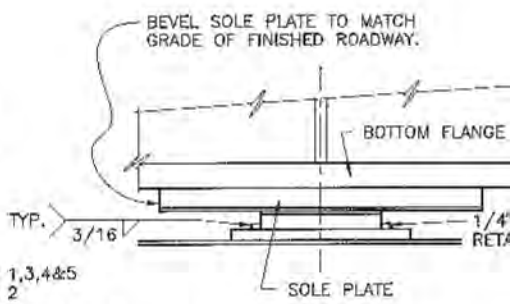


LONGITUDINAL ELEVATION

**FOR INFORMATION ONLY**

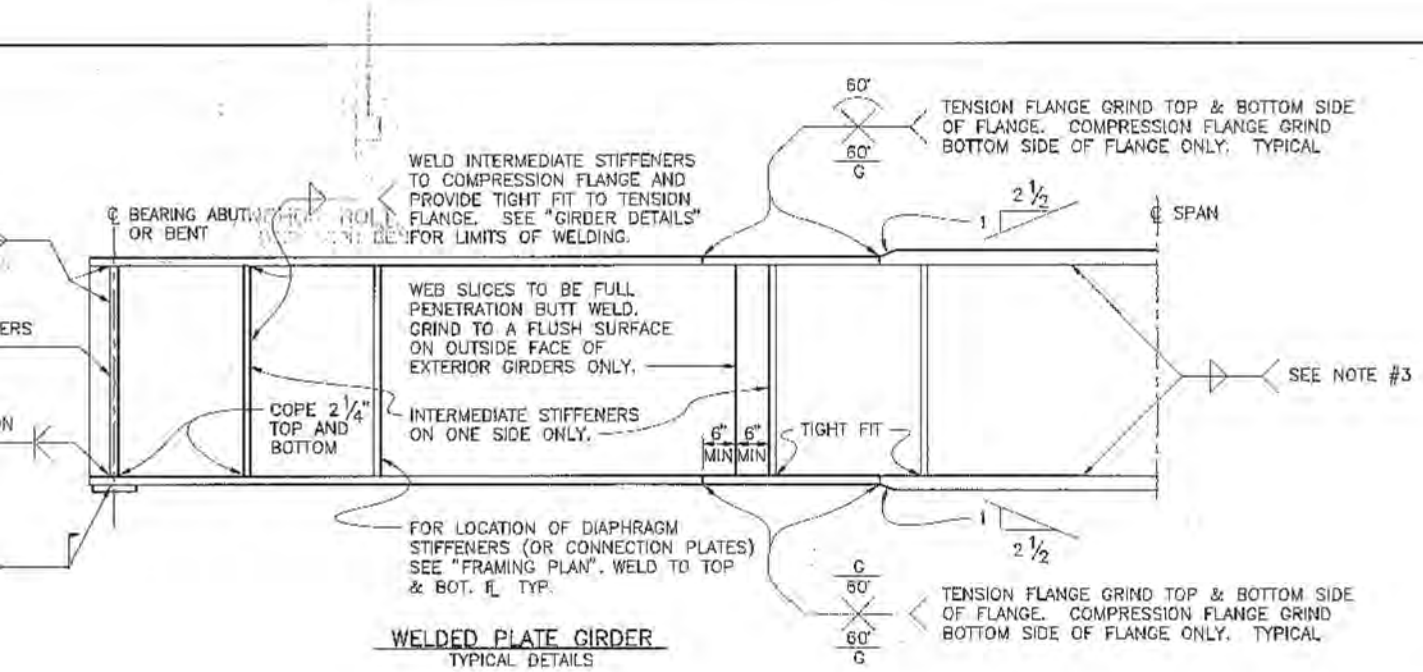


WELDED PLATE GIRDER
TYPICAL DETAILS

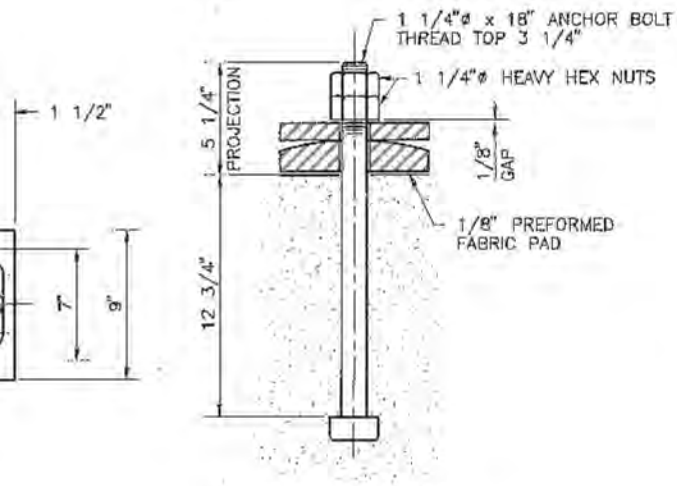


ANCHOR BOLT DETAIL
(FIXED BEARING)

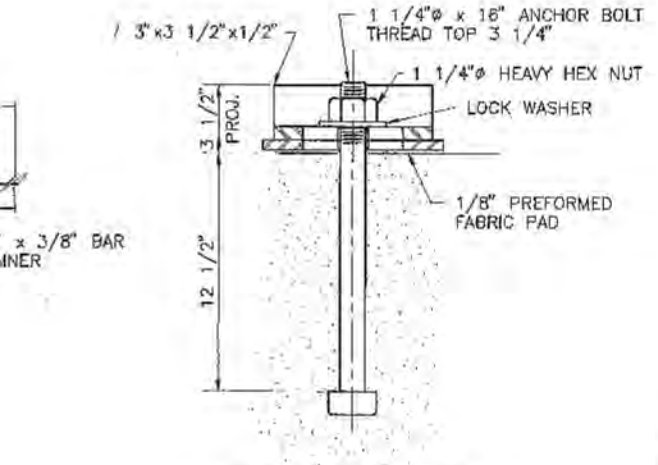


ANCHOR BOLT DETAIL
(EXPANSION BEARING)

1. STRUCTURAL STEEL FOR WELDING SHALL CONFORM TO THE ANSI/AASHTO/AWS D1.5 BRIDGE WELDING CODE FOR A.A.S.H.T.O. M-270 GRADE 36 STEEL.
2. THE METHODS OF JOINT PREPARATION FOR WELDING SHOWN ON THE PLANS ARE BASED ON THE USE OF MANUAL SHIELDED METAL-ARC WELDING. THE USE OF THIS OR ANY OTHER WELDING PROCESS WILL BE SATISFACTORY ONLY AFTER THE WELDING PROCEDURE HAS BEEN SUBMITTED BY THE CONTRACTOR AND APPROVED BY THE ENGINEER.
3. STRENGTH FILLET WELDS OR ALTERNATE SHALL BE THE MINIMUM SIZED WELDS REQUIRED BY A.A.S.H.T.O. 10.23.2.2 & INTERIM SPECIFICATIONS FOR THE THICKNESS OF THE MATERIAL JOINED, UNLESS OTHERWISE SPECIFIED.
4. ELECTRODES FOR MANUAL SHIELDED METAL ARC-WELDING OR OTHER WELDING PROCESSES SHALL CONFORM TO THE REQUIREMENTS OF THE LATEST EDITIONS OF THE ANSI / A.A.S.H.T.O. / AWS D1.5 BRIDGE WELDING CODE & INTERIM SPECIFICATIONS FOR WELDING OF STRUCURAL-STEEL HIGHWAY BRIDGES. ONLY THOSE ELECTRODES MEETING UTAH STATE STANDARD SPECIFICATIONS FOR ROAD AND BRIDGE CONSTRUCTION SHALL BE USED. THE TYPE OF WELDING ELECTRODE TO BE USED SHALL BE SUBMITTED TO THE ENGINEER FOR APPROVAL IN THE WELDING PROCEDURE SPECIFICATION.
5. THE MINIMUM DISTANCE FROM ANY WEB SPLICE TO ANY FLANGE SPLICE SHALL BE 6 INCHES (SHOP SPLICES ONLY).
6. DIMENSIONS SHOWN ON PLANS ASSUME THE AMBIENT TEMPERATURE OF THE GIRDER TO BE 70° F. LENGTH USED IN FABRICATION SHOULD BE CORRECTED AT THE RATE OF ±1/16" PER EACH 100'-0 OF LENGTH FOR EVERY 10° F. DIFFERENCE IN TEMPERATURE TO ALLOW FOR EXPANSION AND CONTRACTION.
7. PAYMENT FOR ANCHOR BOLT AND BEARING UNITS SHALL BE INCLUDED IN THE CONTRACT PRICE FOR "STRUCTURAL STEEL".
8. PREFORMED FABRIC PAD SHALL CONFORM TO ARTICLE 18.10.2 (DIVISION II CONSTRUCTION) OF 1989 A.A.S.H.T.O. SPECIFICATIONS.
9. FIELD WELDING TO GIRDERS SHALL NOT BE PERMITTED EXCEPT WHERE NOTED.

REGISTERED PROFESSIONAL ENGINEER
ARLAN O. BLOOMFIELD
No. 3161
STATE OF UTAH

UTAH DEPARTMENT OF TRANSPORTATION
STRUCTURES DIVISION

LEHI MAIN STREET INTERCHANGE
I-15 N.B. WIDENING OVER US-91 & UPRR
STEEL DETAILS

| | | | |
|---|---|---|---|
| DESIGN AOB 8-17-91 | CHECK CF 6-92 | | |
| DRAWN BJ 8-2-91 | CHECK AOB 8-19-91 | 143+89.44 | |
| CHECK AOB 8-22-91 | CHECK CF 6-92 | STATION | |
| REGIONAL ENGINEER 9/15/92 DATE | GROUP LEADER | UTAH COUNTY | |
| APPROVED DATE | GROUP STRUCTURAL ENGR. | DRG. NO. C-343W | |
| IR-15-6(107)282 PROJECT NUMBER | | SHT 13 OF 19 | |

| NO | BY | DATE | REMARKS |
|---|---|---|---|
| | | | |
| | | | |
| | | | |

REVISIONS

FILE: SSSTR9 BR05 5-11-92

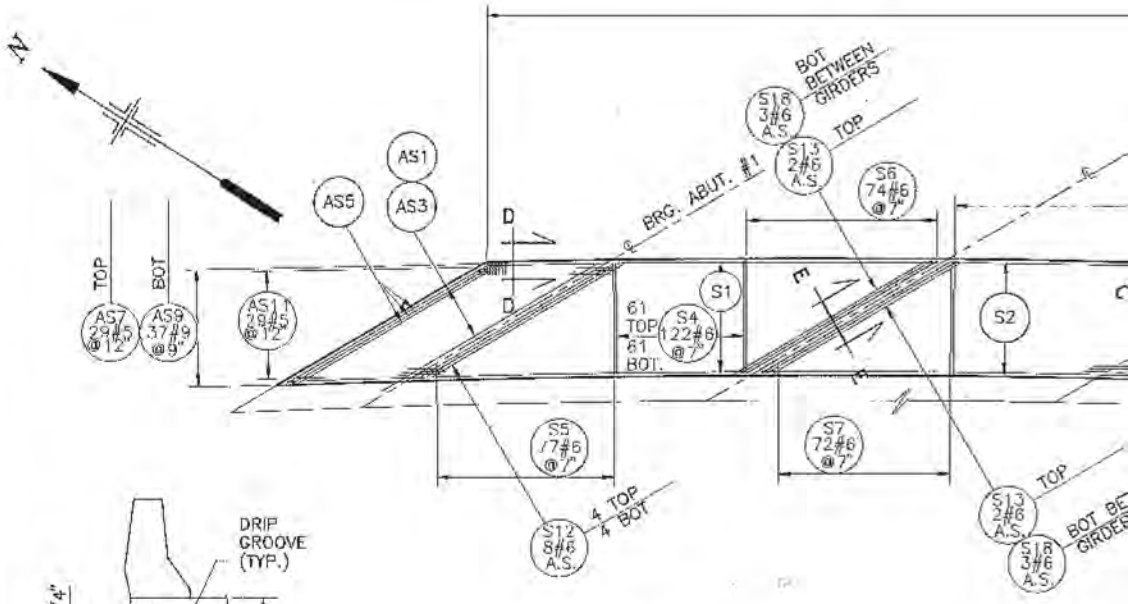


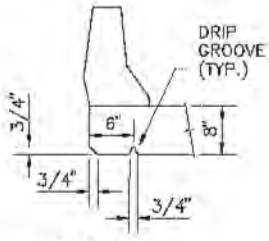


DETAIL A

NOTE: SEE SHEET 15 FOR SECTION E-E.

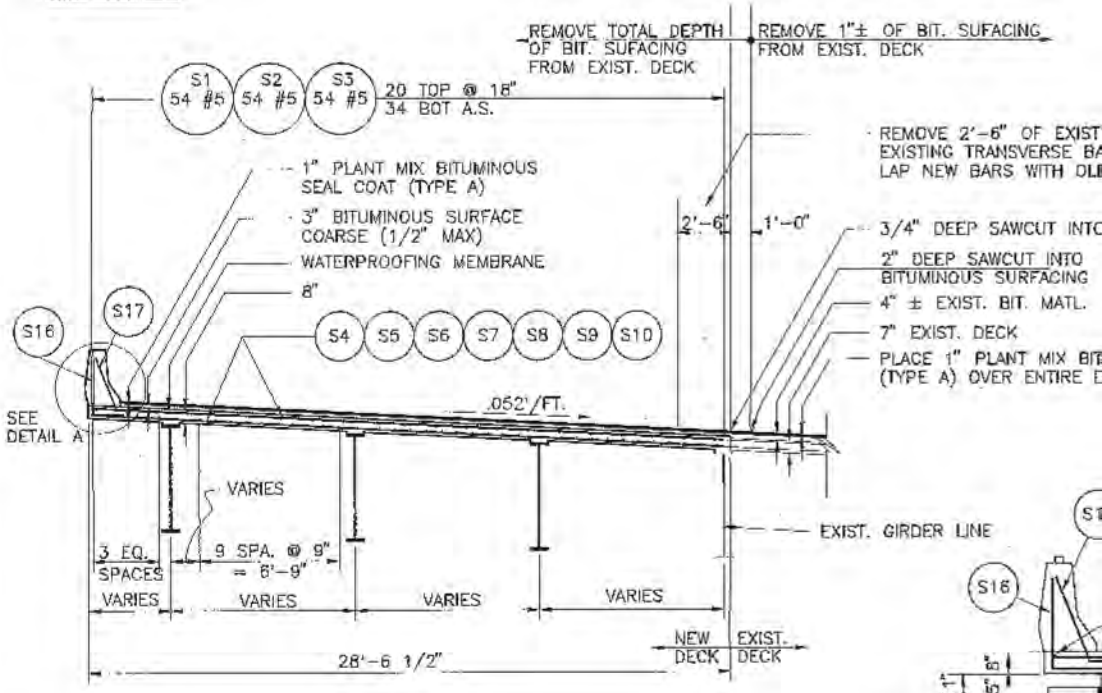


SECTION A-A

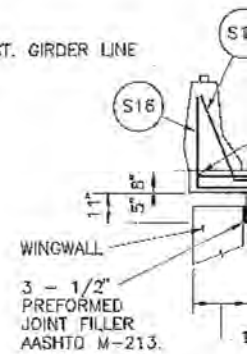


(BITUMINOUS

**FOR INFORMATION ONLY**

DGN Files IP PWBridge\16721\4433.C-049W-14_Formfoudon
02-MAY-2005

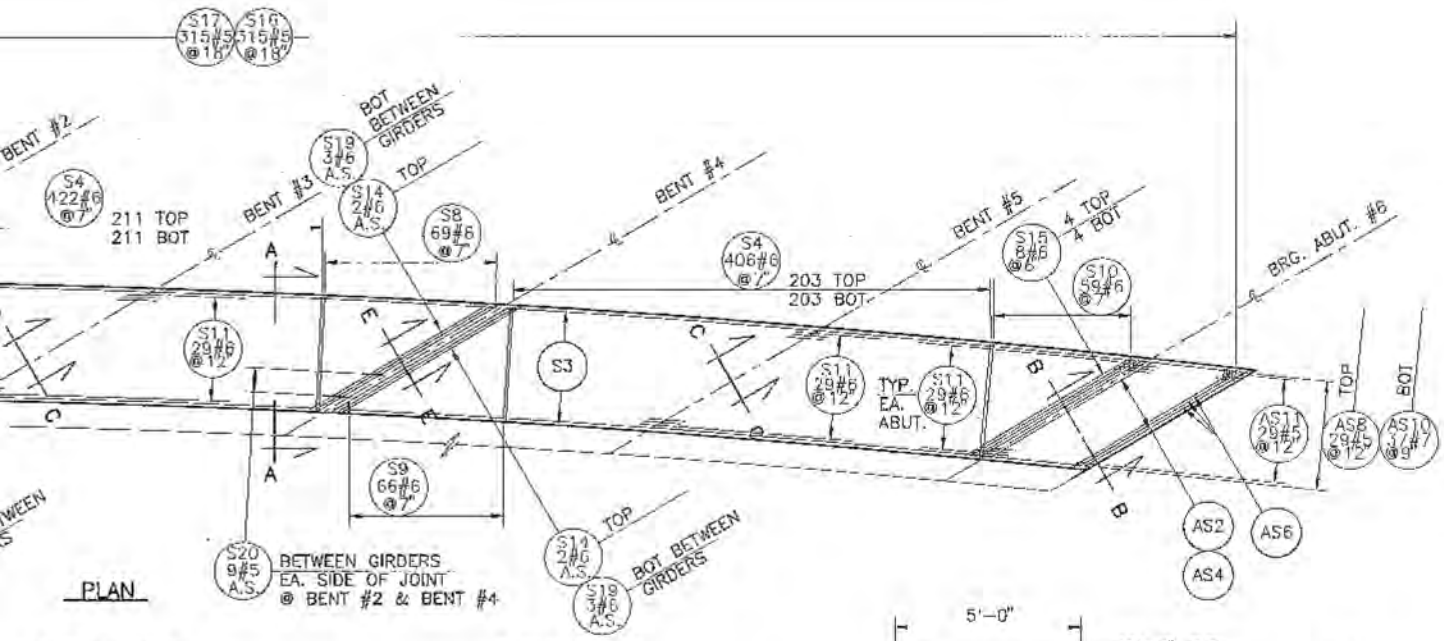


PLAN

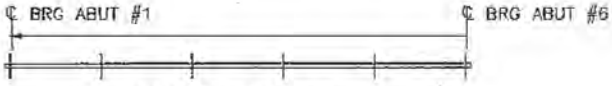


DECK PLACEMENT

NOTE: ARROW DESIGNATES DIRECTION OF DECK PLACEMENT.

ING DECK & APPROACH SLAB CONCRETE.
ARS SHALL REMAIN IN PLACE.
O WHEN POSSIBLE.

EXISTING CONCRETE DECK

UMINOUS SEAL COAT.
ECK.

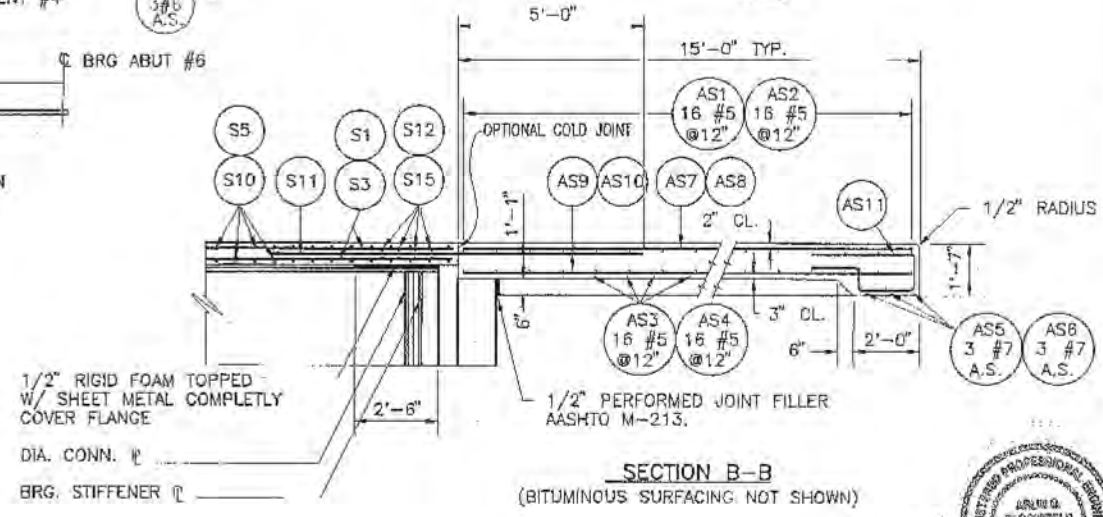


SECTION B-B
(BITUMINOUS SURFACING NOT SHOWN)

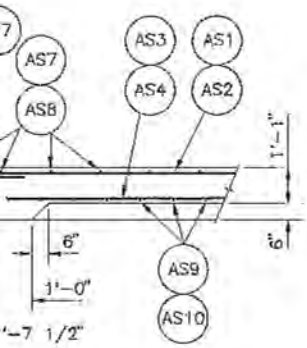


ECTION D-D
SURFACING NOT SHOWN)

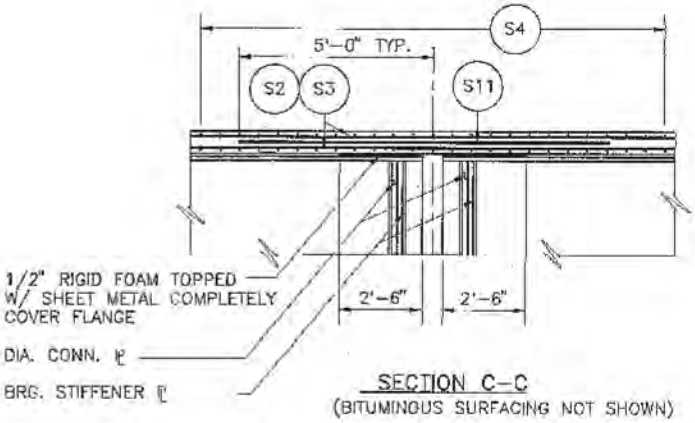


SECTION C-C
(BITUMINOUS SURFACING NOT SHOWN)

| CONCRETE QUANTITIES CLASS AA(AE) | |
|---|---|
| LOCATION | CU. YDS. |
| APPR. SLABS | 71.82 |
| DECK | 339.46 |
| | |
| TOTAL | 411.28 |

UTAH DEPARTMENT OF TRANSPORTATION
STRUCTURES DIVISION

LEHI MAIN STREET INTERCHANGE
I-15 N.B. WIDENING OVER US-91 & UPRR
DECK PLAN AND SECTIONS

| | | | | |
|---|---|---|---|---|
| DESIGN AOB 7-3-91 | CHECK CE 6-92 | | | |
| DRAWN BJ 8-5-91 | CHECK AOB 8-19-91 | | | 143+89.44 |
| QUANT AOB 8-14-91 | CHECK CE 6-92 | | | STATION |
| APPROVED REGIONAL | DATE | DISTRICT ENGINEER | | UTAH COUNTY |
| APPROVED | DATE | CHIEF ENGINEER, FHWA | | PROJECT NO. C-343W |
| | | | JR-15-6(107)282 | SHT 14 OF 19 |

| NO. | BY | DATE | REVISIONS |
|---|---|---|---|
| | | | |

FILE: SSSTR13.DWG DR03 5-18-92

**FOR INFORMATION ONLY**

PLAN FOR EXI

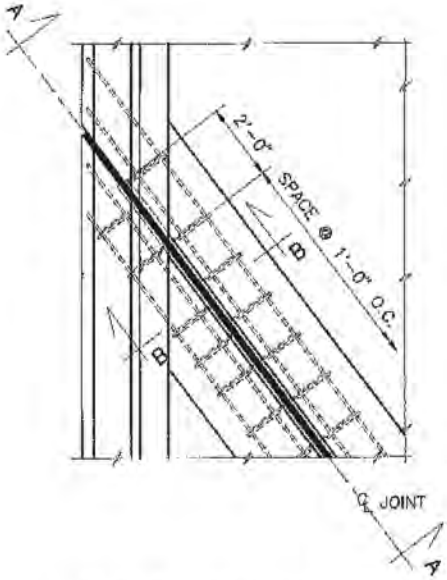


PLAN FOR EXPANSION JOINTS
AT FACE OF PARAPETS – NORMAL JOINTS

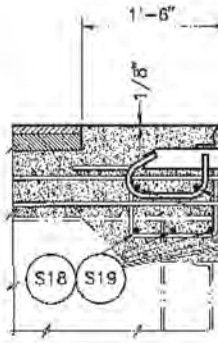


SECTIO

TYPICAL E
@ BEN

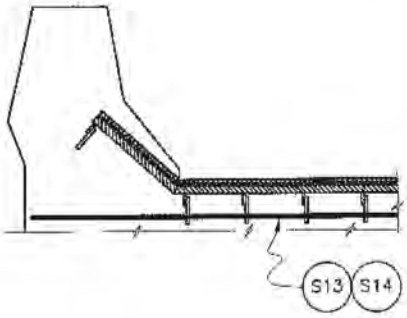


SECTION A–A

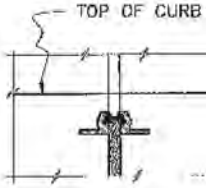


SECTION B–B

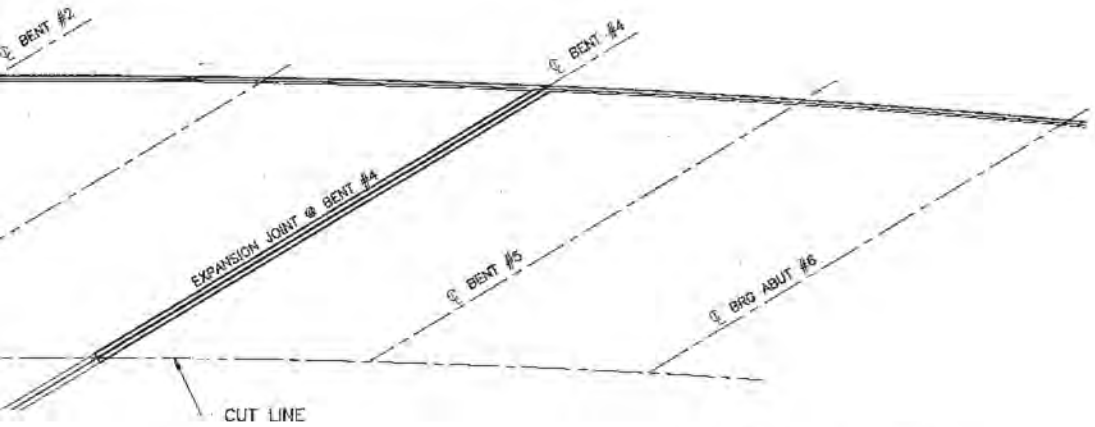


PANSION JOINTS

NOTE: SEE SPECIAL PROVISIONS "EXPANSION JOINT"

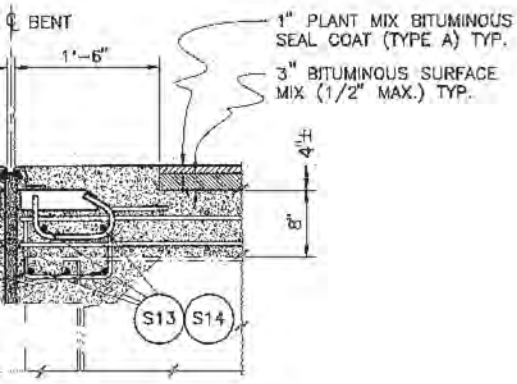


ON E-E

XPANSION JOINT

TS #2 & #4

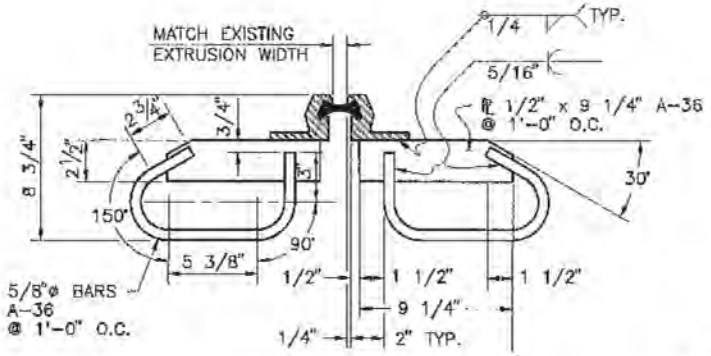


TYPICAL JOINT SECTION

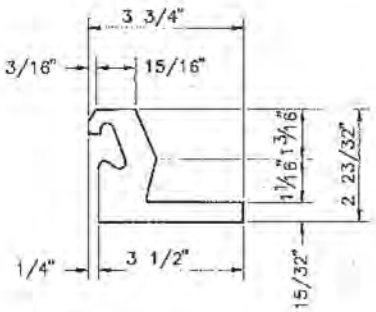


STEEL EXTRUSION

NOTES:

1– ALL SECTIONS ARE SHOWN NORMAL TO EXISTING JOINTS.

2– REMOVE EXISTING NEOPRENE GLANDS AND REPLACE WITH NEW NEOPRENE GLANDS EXTENDING FULL LENGTH OF EXPANSION JOINTS.

3– CUT OFF EXISTING EXPANSION JOINT EXTRUSIONS AND EXTEND WITH NEW EXPANSION JOINT EXTRUSIONS. WELD NEW EXTRUSIONS TO OLD EXTRUSIONS.

4– CONTRACTOR SHALL FURNISH EXPANSION JOINTS MANUFACTURED BY STRUCTURAL ACCESSORIES TO MATCH EXISTING EXPANSION JOINTS.

| | | | |
|---|---|---|---|
| 1 | BMC | 9-7-92 | |
| NO. | BY | DATE | REGARDS |
| REVISIONS | | | |

UTAH DEPARTMENT OF TRANSPORTATION
SALT LAKE CITY, UTAH
STRUCTURES DIVISION

LEHI MAIN STREET INTERCHANGE
I-15 OVER OLD US-91 & UPRR
EXPANSION JOINT DETAILS

| | | | |
|---|---|---|---|
| DESIGN AOB 7-11-91 | CHECK CF 6-92 | | |
| DRAWN GRB 8-29-91 | CHECK AOB 8-30-91 | 143+89.44 | |
| CHECK AOB 8-30-91 | CHECK CF 6-92 | STATION | |
| APPROVED 9/16/92 | | UTAH | |
| APPROVED | | DRC. NO. C-343W | |
| IR-15-6(107)282 | | SHT 15 OF 19 | |

FILE: SSSTR14.DWG 1:10 DRD4 6-21-92

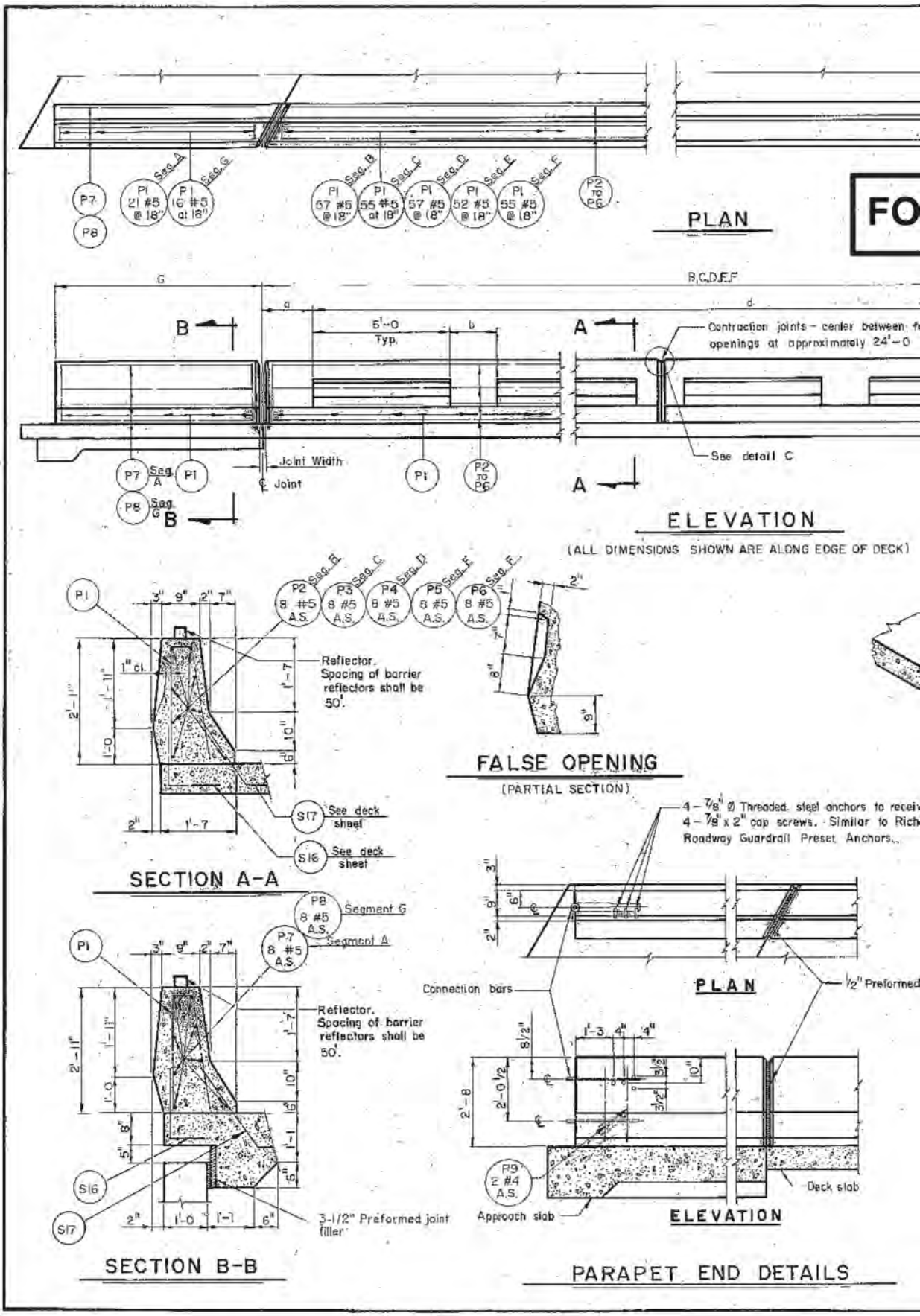


DGN Files IP_PWPdata\16721\4433.C-043W-16.Formfoudon

02-MAY-2005

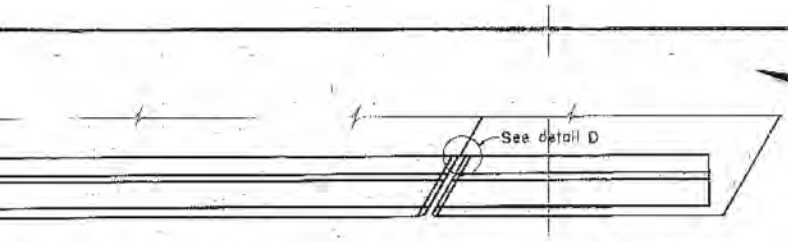


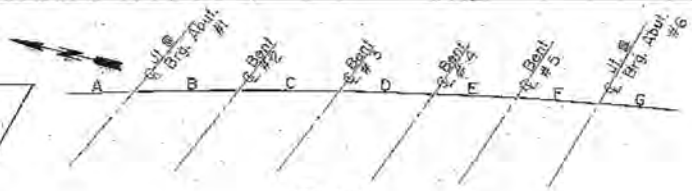


KEY PLAN

# R INFORMATION ONLY

| SCHEDULE | | | | | |
|---|---|---|---|---|---|
| | LENGTH | a | b | c | d |
| A | 80'-2 1/8" | — | — | — | — |
| B | 83'-11 7/8" | 2'-2 5/8" | 2'-2" | 2'-2 5/8" | 79'-6" |
| C | 82'-3 1/8" | 2'-1 3/4" | 2'-0" | 2'-1 3/8" | 78'-0 |
| D | 84'-7 5/8" | 2'-2 1/8" | 2'-3" | 2'-2 1/8" | [illegible] |
| E | 76'-11 5/8" | 2'-2" | 2'-4" | 2'-2" | 72'-8" |
| F | 91'-9 5/8" | 1'-10 3/8" | 2'-0" | 1'-10 5/8" | 78'-0 |
| G | 22'-10 1/4" | — | — | — | — |

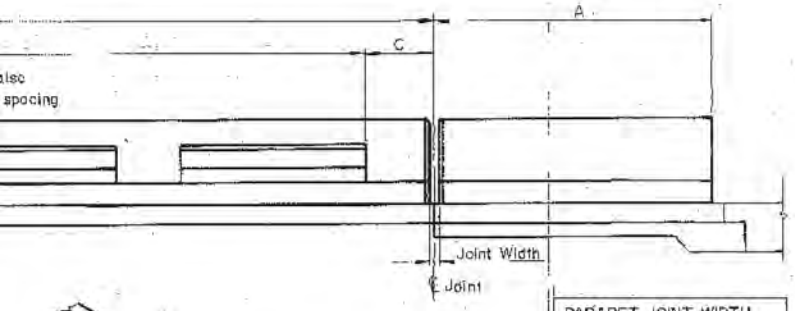


| PARAPET JOINT WIDTH | |
|---|---|
| Location | Width |
| ℄ Brg. Abut. #1 | 1/2" |
| ℄ Bent #2 | Match Exist. Deck Jt. Width |
| ℄ Bent #3 | 1/2" |
| ℄ Bent #4 | Match Exist. Deck Jt. Width |
| ℄ Bent #5 | 1/2" |
| ℄ Brg. Abut. #6 | 1/2" |

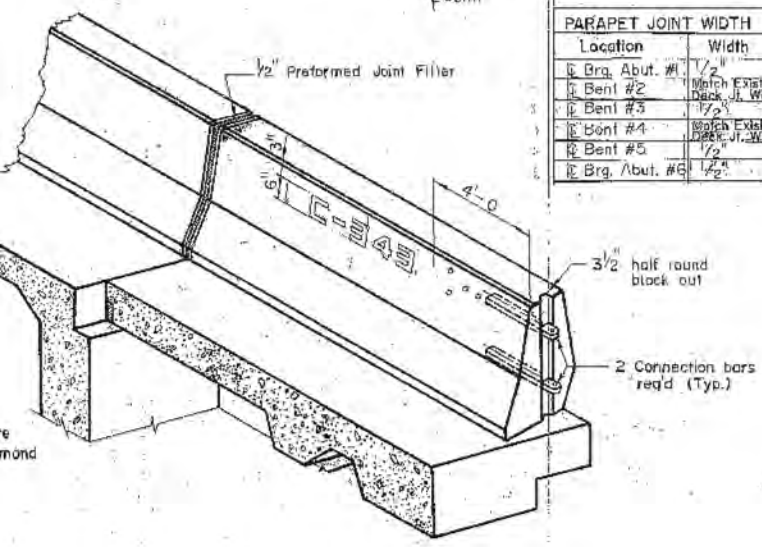


ISOMETRIC

Joint Filler

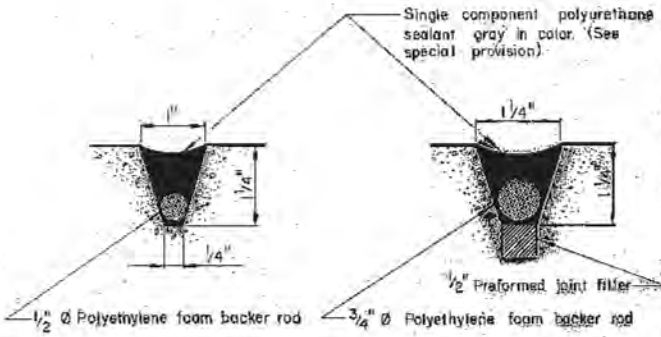


DETAIL C

DETAIL D

## GENERAL NOTES

1. All reinforcing steel splices shall be alternated.
2. Cover to reinforcing steel shall be 1 1/2" min. unless noted otherwise.
3. All reinforcing steel shall be epoxy coated.
4. Rigid plastic foam shall be used to form parapet joints at ℄ Bent #2 & ℄ Bent #4.
5. Drawing number to be located on right-hand side of approach parapet.
6. Place contraction joint on sides and top of parapet.
7. Sealant and foam backer rod shall extend from deck to top of parapet on the inside parapet face, and across top of parapet.
8. Barriers & Rectors shall conform to Standard Drawing No. 735-1.

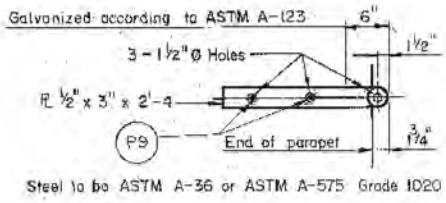


Steel to be ASTM A-36 or ASTM A-575 Grade 1020

CONNECTION BAR DETAIL

TYPICAL SECTION

THRU DRWG. NUMBER

REGISTERED PROFESSIONAL ENGINEER MILTON O. BLOOMFIELD No. 3131 STATE OF UTAH

Concrete Quantities for all parapets
61.00 Cu. Yds. Class AA (AE)

| REVISIONS | | | |
|---|---|---|---|
| NO. | BY | DATE | REMARKS |
| 1 | ADB | 12/2/92 | DIMENSION |

UTAH DEPARTMENT OF TRANSPORTATION
SALT LAKE CITY, UTAH
STRUCTURES DIVISION

LEHI MAIN STREET INTERCHANGE
I-15 NB WIDENING OVER OLD SLC URR
PARAPET DETAILS

| | | | |
|---|---|---|---|
| DESIGN ADB | STRUCTURES | CHECK | 6-92 |
| DRAWN BDH | STRUCTURES | CHECK ADB | SEP-91 |
| QUANT. ADB | STRUCTURES | CHECK SE | 6-92 |
| APPROVED RECOMM. 9/8/92 | DATE | TRAFFIC ENGINEER | |
| APPROVED | DATE | PROJECT ENGINEER | |

143+89.44 STATION
UTAH COUNTY
DRG. NO. C-343 W
IR-15-6 (107) 282 PROJECT NUMBER
SHT. 16 OF 19

# FOR INFORMATION ONLY

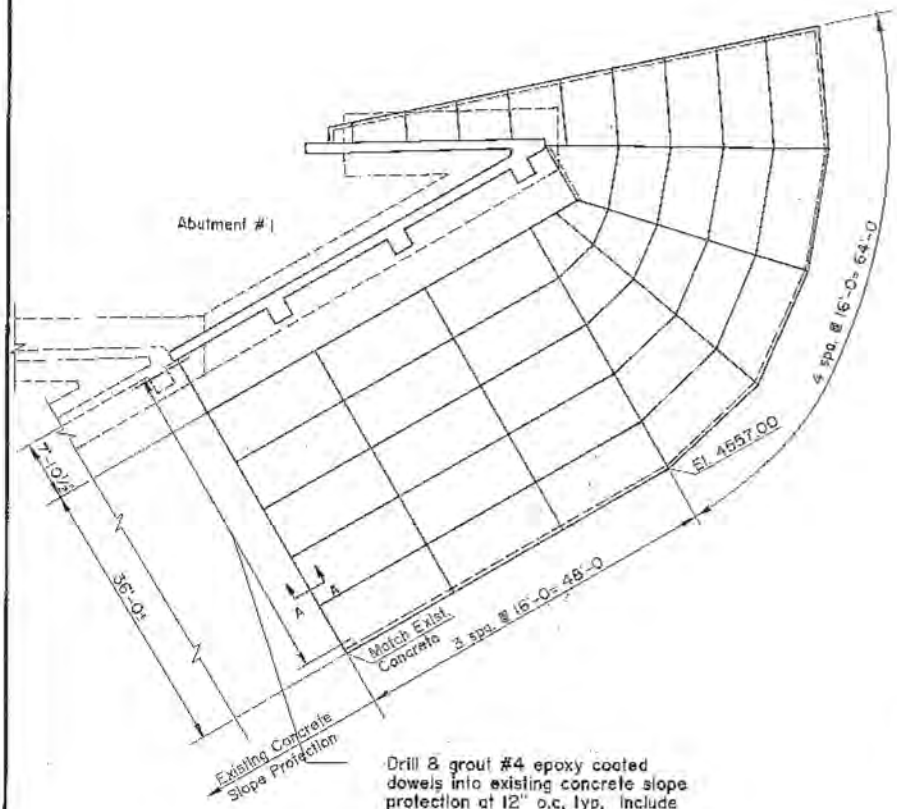


Drill & grout #4 epoxy coated dowels into existing concrete slope protection at 12" o.c. typ. Include cost in cost of concrete slope protection removal.

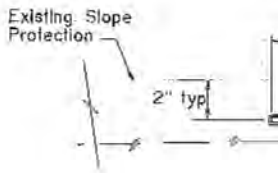


1" Rigid Plastic Foam typ. between slope protection and all structural members.

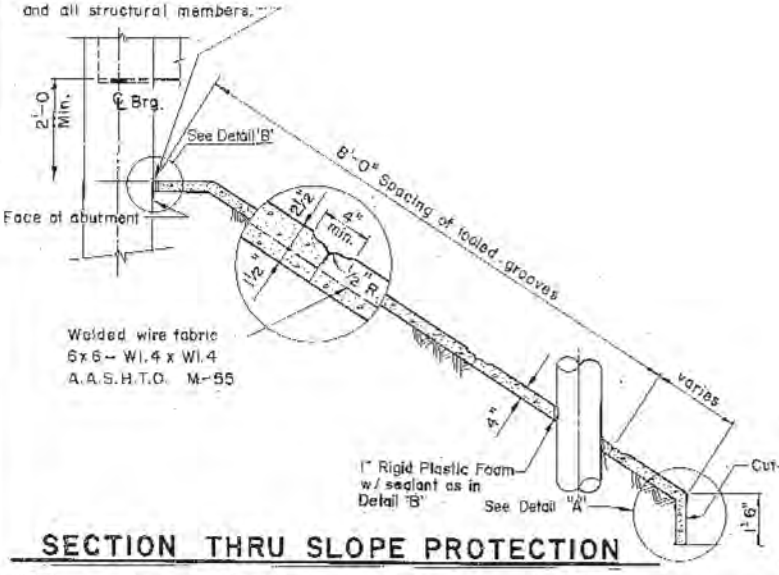


SECTION THRU SLOPE PROTECTION

#5 X 3'-0 long @ 12" O.C. Typ. at toe of slope. Bend to match slope protection.

DETAIL A

Construction as needed

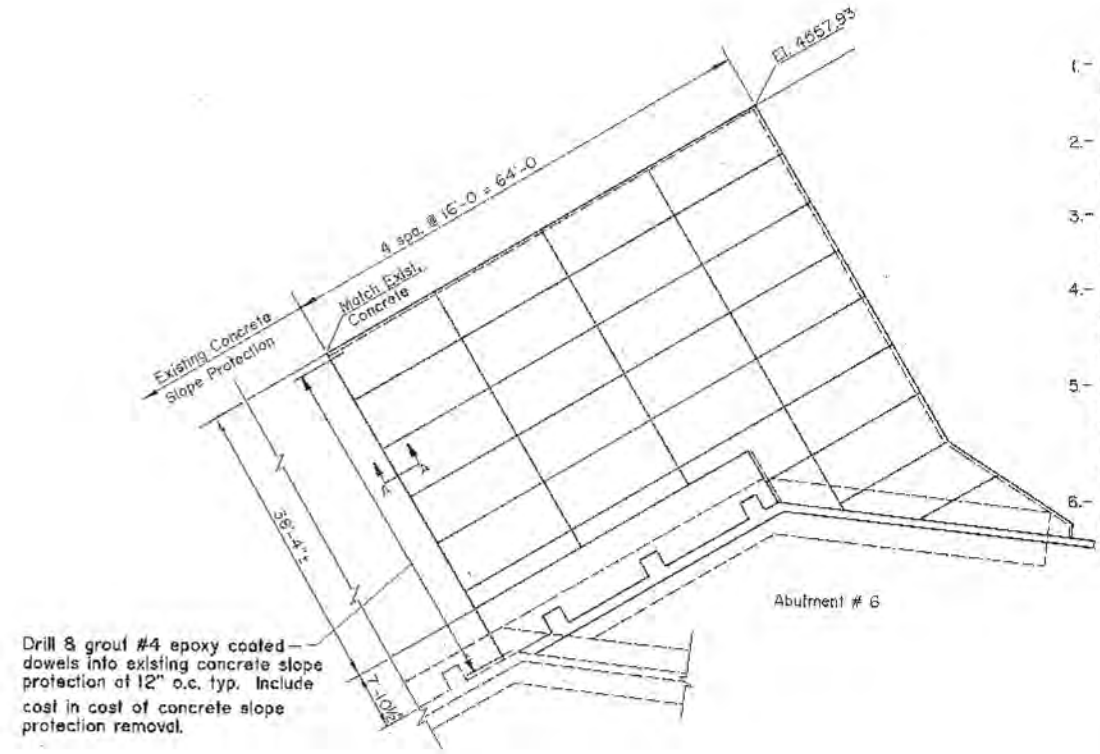


## GENERAL NOTES

1.- Quantities given for Concrete Slope Protection are estimates only and are based on the exposed finished concrete surface area.

2.- Elevations at toe of slope are approximate only and shall be verified at the time of construction by the Engineer.

3.- Location of the toe of slope is approximate only and shall be modified to meet field conditions as directed by the Engineer.

4.- Payment for furnishing and placing reinforcing steel, welded wire fabric, groove fillers and joint fillers shall be included in the contract price per square yard for concrete slope protection.

5.- Cut-off wall (1'-6" x 4" thick) is continuous around perimeter of slope protection except at the abutment footing. Payment for cut-off walls shall be included in the contract price per square yard for concrete slope protection.

6.- Just prior to final inspection the joints between the concrete slope protection and all structural members shall be sealed in accordance with the special provision "Concrete Slope Protection"

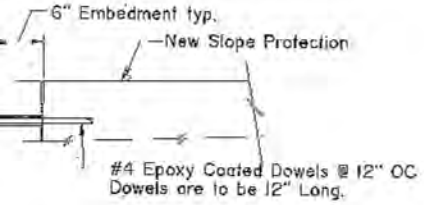


ECTION A-A

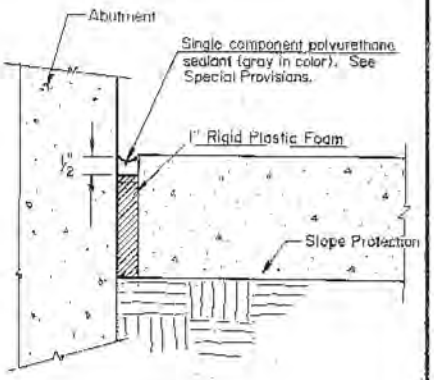


DETAIL 'B'

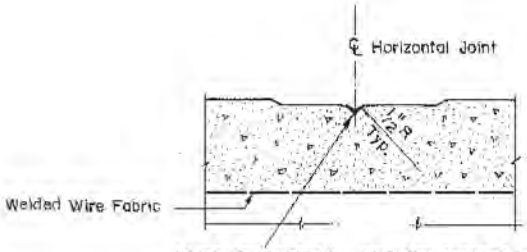


HORIZONTAL JOINT DETAIL

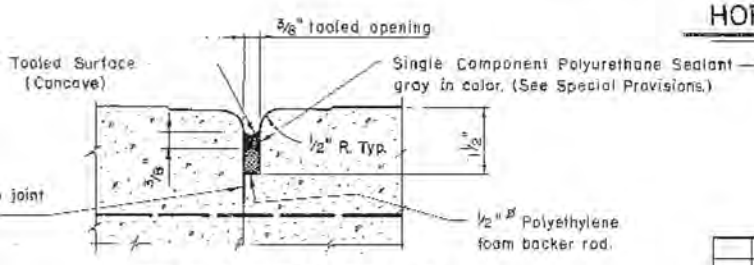


VERTICAL JOINT DETAIL

| CONCRETE SLOPE PROTECTION QUANTITIES | |
|---|---|
| | Sq. Yds. |
| Abutment #1 | 465 |
| Abutment #6 | 393 |
| Total | 858 |

UTAH DEPARTMENT OF TRANSPORTATION
SALT LAKE CITY, UTAH
STRUCTURES DIVISION

LEHI MAIN STREET INTERCHANGE
I-15 N.B. WIDENING OVER US-91 & U.P.R.R.
CONCRETE SLOPE PROTECTION

| | | | | |
|---|---|---|---|---|
| DESIGN A.O.B. 8-7-91 | CHECK CF 6-92 | | | |
| DRAWN B.D.H. 8-10-91 | CHECK A.O.B. 8-15-91 | 143+89.44 | | |
| QUANTITY A.O.B. 8-15-91 | CHECK CF 6-92 | STATION | | |
| APPROVAL REGIONAL ENGINEER 9/15/92 DATE | STRUCTURE DESIGN ENGINEER | UTAH | | |
| APPROVED | | DRG. NO. | | |
| | | C-343 W | | |
| IR-15-6 (107) 282 PROJECT NUMBER | | SHT 17 OF 19 | | |

| NO. | BY | DATE | REVISIONS |
|---|---|---|---|
| | | | |

UTAH LICENSED PROFESSIONAL ENGINEER
ALAN O. BOWMAN
STATE OF UTAH

| MARK | LOCATION | SIZE NO. | NO. BARS | LENGTH | TOTAL LENGTH | SKETCH |
|---|---|---|---|---|---|---|
| A1 | ABUTMENTS | 6 | 26 | 18'-8 | 485'-4 | 18'-5; 1'-0 TYP; CUT LINE; 16'-11 |
| | | | | | | 26 BARS PER SET<br>1 SET REQ'D |
| A2 | ABUTMENTS | 6 | 26 | 9'-0 | 234'-0 | 1'-0; 8'-0 |
| A3 | ABUTMENTS | 5 | 38 | 15'-6 | 589'-0 | 16'-4; CUT LINE; 14'-9 |
| | | | | | | 38 BARS PER SET<br>1 SET REQ'D |
| A4 | ABUTMENTS | 5 | 22 | 56'-4 | 1238'-4 | 2'-2; 54'-2 |
| | | | | | | 1 SPLICE REQ'D |
| A5 | ABUTMENTS | 6 | 5 | 16'-3 | 81'-3 | |
| A6 | ABUTMENTS | 6 | 4 | 5'-11 | 23'-8 | |
| A7 | ABUTMENTS | 5 | 54 | 10'-10 | 585'-0 | 1'-0; 3'-4; 1'-0; 2'-2 |
| A8 | ABUTMENTS | 5 | 15 | 13'-0 | 195'-0 | 2'-2; 10'-10 |
| | | | | | | 1 SPLICE REQ'D |
| A9 | ABUTMENTS | 5 | 38 | 2'-9 | 104'-6 | |
| | | | | | | A |
| A10 | ABUTMENTS | 5 | 11 | 6'-2 | 67'-10 | 4'-2 |
| A11 | ABUTMENTS | 5 | 11 | 2'-10 | 31'-2 | 0'-10 |
| A12 | ABUTMENTS | 6 | 32 | 15'-3 | 488'-0 | 1'-0; 1'-0; A; 10" |
| A13 | ABUTMENTS | 5 | 30 | 12'-1 | 362'-6 | |
| | | | | | | 14'-8; 1'-0 TYP; A12 CUT LINE; 13'-10<br>32 BARS PER SET<br>1 SET REQ'D |
| | | | | | | 12'-7; A13 CUT LINE; 11'-7<br>30 BARS PER SET<br>1 SET REQ'D |
| A14 | ABUTMENTS | 5 | 16 | 44'-0 | 704'-0 | |
| A15 | ABUTMENTS | 6 | 6 | 11'-7 | 69'-6 | |
| | ABUTMENTS | | | | | A / B / C / D |
| A16 | ABUTMENTS | 5 | 8 | 4'-4 | 34'-8 | 2'-2 / 2'-2 / 1'-9 / 1'-3 |
| A17 | ABUTMENTS | 5 | 8 | 6'-4 | 50'-8 | 4'-2 / 2'-2 / 1'-9 / 1'-3 |
| | | | | | | B; D; A; C |
| A18 | ABUTMENTS | 5 | 15 | 9'-4 | 140'-0 | 2'-2; 7'-2 |
| | | | | | | 1 SPLICE REQ'D |
| W1 | WINGWALLS | 5 | 19 | 16'-3 | 308'-9 | |
| | | | | | | A / B |
| W2 | WINGWALLS | 6 | 30 | 19'-5 | 582'-6 | 18'-5 / 1'-0 |
| W3 | WINGWALLS | 6 | 29 | 9'-0 | 261'-0 | 8'-0 / 1'-0; B; A |
| W4 | WINGWALLS | 5 | 8 | 6'-10 | 54'-8 | 5'-2; 1'-8; CUT LINE; 1'-8; 5'-2 |
| | | | | | | 4 BARS PER SET<br>2 SET REQ'D |
| W5 | WINGWALLS | 5 | 4 | 30'-1 | 120'-4 | |

| MARK | LOCATION | SIZE NO. | NO. BARS | LENGTH | TOTAL LENGTH | |
|---|---|---|---|---|---|---|
| W6 | WINGWALL | 5 | 2 | 28'-1 | 56'-2 | |
| W7 | WINGWALL | 5 | 2 | 25'-6 | 51'-0 | |
| W8 | WINGWALL | 5 | 14 | 24-'1 | 337'-2 | |
| W9 | WINGWALL | 5 | 24 | 12'-4 | 296'-0 | |
| | | | | | | CUT L |
| | | | | | | 24 BARS PER SET<br>1 SET REQ'D |
| W10 | WINGWALL | 6 | 43 | 15'-5 | 662'-11 | 12; 1'-6 TYP |
| | | | | | | CUT |
| | | | | | | 43 BARS PER SET<br>1 SET REQ'D |
| W11 | WINGWALL | 5 | 4 | 40'-6 | 162'-0 | 14 |
| W12 | WINGWALL | 5 | 2 | 38'-8 | 77'-0 | |
| W13 | WINGWALL | 5 | 2 | 35'-11 | 71'-10 | |
| W14 | WINGWALL | 5 | 8 | 34'-7 | 276'-8 | |
| W15 | WINGWALL | 5 | 4 | 6'-10 | 27'-4 | |
| W16 | WINGWALL | 5 | 2 | 15'-2 | 30'-4 | |
| W17 | WINGWALL | 5 | 22 | 2'-0 | 44'-0 | |
| F1 | ABUT. FTG | 5 | 25 | 7'-8 | 191'-8 | |
| F2 | ABUT. FTG | 6 | 44 | 7'-8 | 337'-4 | |
| F3 | ABUT. FTG | 6 | 14 | 54'-4 | 760'-8 | |
| | | | | | | 1 SPLICE REQ'D |
| F4 | ABUT. FTG | 6 | 16 | 27'-1 | 433'-4 | |
| | | | | | | A |
| F5 | ABUT. FTG | 5 | 10 | 11'-8 | 116'-8 | 15'-8 |
| F6 | ABUT. FTG | 6 | 18 | 11'-8 | 210'-0 | 15'-8 |
| | | | | | | CUT LIN |
| | | | | | | C = NO. BARS PER SET<br>D = NO. SETS REQ'D |
| F7 | ABUT. FTG | 5 | 9 | 7'-8 | 69'-0 | |
| F8 | ABUT. FTG | 6 | 18 | 7'-8 | 122'-8 | |
| F9 | ABUT. FTG | 5 | 141 | 3'-0 | 423'-0 | |
| F10 | ABUT. FTG | 6 | 28 | 3'-0 | 84'-0 | |
| F11 | ABUT. FTG | 6 | 15 | 3'-10 | 57'-6 | |
| F12 | ABUT. FTG | 6 | 14 | 43'-11 | 614'-10 | |
| F13 | ABUT. FTG | 6 | 14 | 37'-10 | 529'-8 | |
| | | | | | | A |
| F14 | ABUT. FTG | 5 | 5 | 3'-6 | 17'-6 | 5'-8 |
| F15 | ABUT. FTG | 6 | 6 | 3'-7 | 21'-6 | 5'-10 |
| | | | | | | CUT LIN |
| | | | | | | C = NO. BARS PER SET<br>D = NO. SETS REQ'D |
| F16 | ABUT. FTG | 5 | 50 | 6'-8 | 333'-4 | |
| F17 | ABUT. FTG | 6 | 57 | 6'-8 | 380'-0 | |
| F18 | ABUT. FTG | 6 | 2 | 11'-2 | 22'-4 | |
| | | | | | | A |
| B1 | BENT CAPS | 5 | 96 | 14'-0 | 1344'-0 | 3'-8 |
| B2 | BENT CAPS | 5 | 16 | 12'-4 | 197'-4 | 2'-10 |
| B3 | BENT CAPS | 5 | 16 | 12'-6 | 200'-0 | 2'-11 |
| B4 | BENT CAPS | 5 | 16 | 12'-10 | 205'-4 | 3'-1 |
| B5 | BENT CAPS | 5 | 16 | 13'-0 | 208'-0 | 3'-2 |
| B6 | BENT CAPS | 5 | 16 | 13'-4 | 213'-4 | 3'-4 |
| B7 | BENT CAPS | 5 | 16 | 13'-6 | 216'-0 | 3'-5 |
| B8 | BENT CAPS | 5 | 16 | 13'-8 | 218'-8 | 3'-6 |
| B9 | BENT CAPS | 5 | 16 | 14'-0 | 224'-0 | 3'-8 |
| | | | | | | C; A |

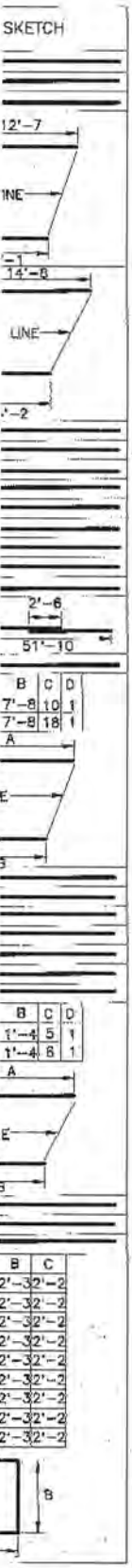


| MARK | LOCATION | SIZE NO. | NO. BARS | LENGTH | TOTAL LENGTH | SKETCH | |
|---|---|---|---|---|---|---|---|
| B10 | BENT CAPS | 11 | 4 | 40'-5 | 161'-8 | | |
| B11 | BENT CAPS | 11 | 4 | 39'-2 | 156'-8 | | A |
| B12 | BENT CAPS | 8 | 6 | 48'-3 | 289'-6 | | 22'-5 |
| B13 | BENT CAPS | 8 | 6 | 46'-11 | 281'-6 | | 21'-9 |
| B14 | BENT CAPS | 8 | 6 | 45'-9 | 274'-6 | | 21'-2 |
| B15 | BENT CAPS | 8 | 6 | 44'-5 | 266'-6 | | 20'-6 |
| B16 | BENT CAPS | 11 | 4 | 44'-5 | 177'-8 | | 40'-5 |
| B17 | BENT CAPS | 11 | 4 | 43'-2 | 172'-8 | | 39'-2 |
| B18 | BENT CAPS | 11 | 4 | 41'-11 | 167'-8 | | 37'-11 |
| B19 | BENT CAPS | 11 | 4 | 40'-8 | 162'-8 | | 36'-8 |
| B20 | BENT CAPS | 11 | 2 | 43'-2 | 86'-4 | | |

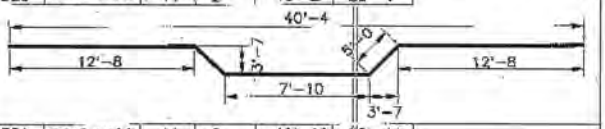


| | | | | | |
|---|---|---|---|---|---|
| B21 | BENT CAPS | 11 | 2 | 41'-11 | 83'-10 |

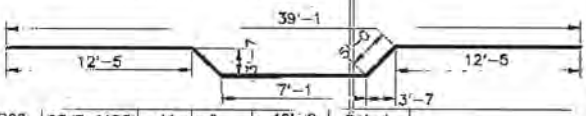


| | | | | | |
|---|---|---|---|---|---|
| B22 | BENT CAPS | 11 | 2 | 40'-8 | 81'-4 |

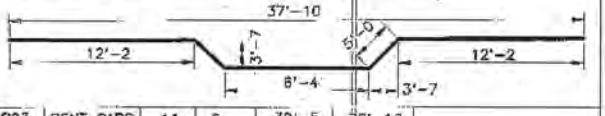


| | | | | | |
|---|---|---|---|---|---|
| B23 | BENT CAPS | 11 | 2 | 39'-5 | 78'-10 |

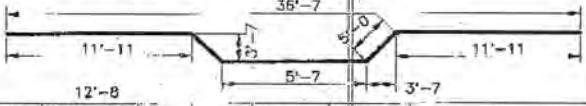


| | | | | | | |
|---|---|---|---|---|---|---|
| B24 | BENT CAPS | 11 | 4 | 27'-0 | 108'-0 | |
| B25 | BENT CAPS | 11 | 4 | 26'-3 | 105'-0 | |
| B26 | BENT CAPS | 11 | 4 | 25'-6 | 102'-0 | |
| B27 | BENT CAPS | 11 | 4 | 24'-9 | 99'-0 | |
| | | | | | | A |
| B28 | BENT CAPS | 5 | 4 | 11'-7 | 45'-4 | 6'-9 |
| B29 | BENT CAPS | 5 | 4 | 11'-4 | 45'-4 | 6'-6 |
| B30 | BENT CAPS | 5 | 4 | 11'-1 | 44'-4 | 6'-3 |
| B31 | BENT CAPS | 5 | 4 | 10'-10 | 43'-4 | 6'-0 |

| | | | | | | | |
|---|---|---|---|---|---|---|---|
| B32 | BENT CAPS | 11 | 4 | 37'-11 | 151'-8 | | |
| B33 | BENT CAPS | 11 | 4 | 36'-8 | 146'-8 | | |
| | | | | | | A | B |
| C1 | BENT COLS | 11 | 19 | 36'-4 | 690'-4 | 34'-4 | 2'-0 |
| C2 | BENT COLS | 11 | 19 | 35'-9 | 679'-3 | 33'-9 | 2'-0 |
| C3 | BENT COLS | 11 | 19 | 36'-3 | 688'-9 | 34'-3 | 2'-0 |
| C4 | BENT COLS | 11 | 19 | 35'-9 | 679'-3 | 33'-9 | 2'-0 |
| C5 | BENT COLS | 11 | 19 | 35'-11 | 682'-5 | 33'-11 | 2'-0 |
| C6 | BENT COLS | 11 | 19 | 35'-5 | 672'-11 | 33'-5 | 2'-0 |
| C7 | BENT COLS | 11 | 19 | 35'-5 | 672'-11 | 33'-5 | 2'-0 |
| C8 | BENT COLS | 11 | 19 | 35'-0 | 665'-0 | 33'-0 | 2'-0 |

| MARK | LOCATION | SIZE NO. | NO. BARS | LENGTH | TOTAL LENGTH | SKETCH | | |
|---|---|---|---|---|---|---|---|---|
| | | | | | | A | B | C |
| C9 | BENT COLS | 4 | 1 | 1342'-2 | 1342'-2 | 33'-8 | 0'-3 | 3'-2 |
| C10 | BENT COLS | 4 | 1 | 1319'-3 | 1319'-3 | 33'-1 | 0'-3 | 3'-2 |
| C11 | BENT COLS | 4 | 1 | 1338'-10 | 1338'-10 | 33'-7 | 0'-3 | 3'-2 |
| C12 | BENT COLS | 4 | 1 | 1319'-3 | 1319'-3 | 33'-1 | 0'-3 | 3'-2 |
| C13 | BENT COLS | 4 | 1 | 1325'-9 | 1325'-9 | 33'-3 | 0'-3 | 3'-2 |
| C14 | BENT COLS | 4 | 1 | 1306'-2 | 1306'-2 | 32'-9 | 0'-3 | 3'-2 |
| C15 | BENT COLS | 4 | 1 | 1306'-2 | 1306'-2 | 32'-9 | 0'-3 | 3'-2 |
| C16 | BENT COLS | 4 | 1 | 1289'-9 | 1289'-9 | 32'-4 | 0'-3 | 3'-2 |

SPIRAL BAR MAY BE FABRICATED FROM COLD DRAWN WIRE CONFORMING TO ASTM A-82 AT FABRICATORS OPTION.

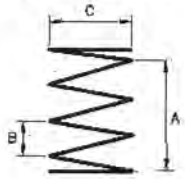


| | | | | | |
|---|---|---|---|---|---|
| F19 | BENT FTGS | 9 | 200 | 11'-8 | 2333'-4 |
| F20 | BENT FTGS | 9 | 128 | 11'-8 | 1493'-4 |
| F21 | BENT FTGS | 8 | 144 | 7'-8 | 1104'-0 |
| F22 | BENT FTGS | 8 | 96 | 7'-8 | 736'-0 |

| | | | | | | A | B | C |
|---|---|---|---|---|---|---|---|---|
| S1 | DECK | 5 | 54 | 87'-10 | 4743'-0 | 85'-8 | 2'-2 | 1 |
| S2 | DECK | 5 | 54 | 176'-10 | 9549'-0 | 170'-4 | 2'-2 | 3 |
| S3 | DECK | 5 | 54 | 168'-8 | 9108'-0 | 162'-2 | 2'-2 | 3 |

C = NO SPLICES

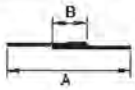


| | | | | | | | | | | | |
|---|---|---|---|---|---|---|---|---|---|---|---|
| S4 | DECK | 6 | 950 | 28'-4 | 26916'-8 | | | | | | |
| | | | | | | A | B | C | D | E | F |
| S5 | DECK | 6 | 77 | 30'-4 | 2335'-8 | 28'-4 | 2'-0 | 2'-0 | 28'-4 | 77 | 1 |
| S6 | DECK | 6 | 74 | 30'-4 | 2244'-8 | 28'-4 | 2'-0 | 2'-0 | 28'-4 | 74 | 1 |
| S7 | DECK | 6 | 72 | 30'-4 | 2184'-0 | 28'-4 | 2'-0 | 2'-0 | 28'-4 | 72 | 1 |
| S8 | DECK | 6 | 69 | 30'-4 | 2093'-0 | 28'-4 | 2'-0 | 2'-0 | 28'-4 | 69 | 1 |
| S9 | DECK | 6 | 66 | 30'-4 | 2002'-0 | 28'-4 | 2'-0 | 2'-0 | 28'-4 | 66 | 1 |
| S10 | DECK | 6 | 59 | 30'-4 | 1789'-8 | 28'-4 | 2'-0 | 2'-0 | 28'-4 | 59 | 1 |

E = NO. BARS PER SET
F = NO. SETS REQ'D

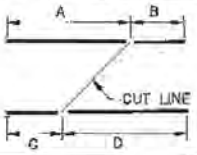


| | | | | | |
|---|---|---|---|---|---|
| S11 | DECK | 6 | 116 | 10'-0 | 1160'-0 |

# FOR INFORMATION ONLY

REGISTERED PROFESSIONAL ENGINEER
ARLIN O. BLOOMFIELD
No. 3191
STATE OF UTAH

UTAH DEPARTMENT OF TRANSPORTATION
SALT LAKE CITY, UTAH
STRUCTURES DIVISION

LEHI MAIN STREET INTERCHANGE
I-15 N.B. WIDENING OVER US-91 & UPRR
REINFORCING STEEL SCHEDULE

| | | | |
|---|---|---|---|
| DESIGN AOB 6-3-91 | CHECK CF 6-92 | | |
| DRAWN BJ 7-29-91 | CHECK AOB 8-12-91 | | 143+89.44 |
| COMPUTED AOB 6-22-91 | CHECK CF 6-92 | | STATION |
| APPROVED 9/15/92 DATE | DIRECTOR OF TRANSPORTATION | | UTAH COUNTY |
| APPROVED DATE | FEDERAL HIGHWAY ADMINISTRATION | | DRG. NO. C-343W |
| | | IR-15-8(107)282 PROJECT NUMBER | SHT 18 OF 19 |

| NO. | BY | DATE | REMARKS |
|---|---|---|---|
| | | | |
| | | | |
| | | | |

REVISIONS

FILE: LESTEEL.DWG DR01 7-6-92

| MARK | LOCATION | SIZE NO. | NO. BARS | LENGTH | TOTAL LENGTH | SKETCH | | | |
|---|---|---|---|---|---|---|---|---|---|
| | | | | | | A | B | C | |
| S12 | | 6 | 8 | 60'-6 | 484'-0 | 58'-0 | 2'-6 | 1 | C = NO SPLICES |
| S13 | | 6 | 4 | 58'-6 | 234'-0 | 56'-0 | 2'-6 | 1 | |
| S14 | | 6 | 4 | 54'-6 | 218'-0 | 52'-0 | 2'-6 | 1 | |
| S15 | | 5 | 9 | 50'-6 | 454'-0 | 48'-0 | 2'-6 | 1 | |
| S16 | | 5 | 315 | 2'-10 | 892'-6 | | | | |
| S17 | | 5 | 315 | 2'-10 | 892'-6 | | | | |
| S18 | | 6 | 18 | 16'-10 | 303'-0 | | | | |
| S19 | | 6 | 18 | 15'-4 | 276'-0 | | | | |
| S20 | DECK | 5 | 108 | 6'-0 | 648'-0 | | | | |
| | | | | | | A | B | C | |
| AS1 | APPR. SLAB | 5 | 16 | 60'-2 | 962'-8 | 58'-0 | 2'-2 | 1 | C = NO SPLICES |
| AS2 | | 5 | 16 | 50'-2 | 802'-8 | 48'-0 | 2'-2 | 1 | |
| AS3 | | 5 | 16 | 54'-2 | 866'-8 | 52'-0 | 2'-2 | 1 | |
| AS4 | | 5 | 16 | 44'-2 | 706'-8 | 42'-0 | 2'-2 | 1 | |
| AS5 | | 7 | 3 | 55'-4 | 166'-0 | 52'-0 | 3'-4 | 1 | |
| AS6 | | 7 | 3 | 45'-4 | 136'-0 | 42'-0 | 3'-4 | 1 | |
| AS7 | | 5 | 29 | 32'-0 | 928'-0 | | | | |
| AS8 | | 5 | 29 | 26'-1 | 756'-5 | | | | |
| AS9 | | 9 | 37 | 32'-0 | 1184'-0 | | | | |
| AS10 | | 9 | 37 | 26'-1 | 965'-1 | | | | |
| AS11 | APPR. SLAB | 5 | 58 | 7'-10 | 454'-4 | | | | |
| P1 | PARAPET | 5 | 315 | 5'-11 | 1863'-9 | | | | |
| | | | | | | A | B | C | |
| P2 | | 5 | 8 | 85'-10 | 686'-8 | 83'-8 | 2'-2 | 1 | C = NO SPLICES |
| P3 | | 5 | 8 | 83'-10 | 670'-8 | 81'-8 | 2'-2 | 1 | |
| P4 | | 5 | 8 | 86'-7 | 692'-8 | 84'-5 | 2'-2 | 1 | |
| P5 | | 5 | 8 | 78'-9 | 630'-0 | 76'-7 | 2'-2 | 1 | |
| P6 | | 5 | 8 | 83'-8 | 669'-4 | 81'-6 | 2'-2 | 1 | |
| P7 | | 5 | 8 | 29'-10 | 238'-8 | | | | |
| P8 | | 5 | 8 | 22'-6 | 180'-0 | | | | |
| P9 | PARAPET | 4 | 4 | 2'-0 | 10'-8 | | | | |

BLOCK 3 SIZE: 36.0" X 24.0" - REBAR PLOT -- REBAR PLOT (R-15-61107)282 C-3434 A-BLOOMFIELD 10-13-91 9999

DGN Files IPL PW\Bridges\1672\4433.C-3434W-19.Formfoudon

02-MAY-2005

**FOR INFORMATION ONLY**

## SUMMARY OF EPOXY COATED BARS

| | | | | | | | |
|---|---|---|---|---|---|---|---|
| 10558'-0 | OF NUMBER | 4 | BARS AT | 0.668 LBS/FT = | 7052.7 | LBS |
| 47316'-3 | OF NUMBER | 5 | BARS AT | 1.043 LBS/FT = | 49350.8 | LBS |
| 49106'-8 | OF NUMBER | 6 | BARS AT | 1.502 LBS/FT = | 73758.1 | LBS |
| 302'-0 | OF NUMBER | 7 | BARS AT | 2.044 LBS/FT = | 617.3 | LBS |
| 2952'-0 | OF NUMBER | 8 | BARS AT | 2.670 LBS/FT = | 7881.8 | LBS |
| 5975'-9 | OF NUMBER | 9 | BARS AT | 3.400 LBS/FT = | 20317.6 | LBS |
| 7472'-5 | OF NUMBER | 11 | BARS AT | 5.313 LBS/FT = | 39700.9 | LBS |
| | | | | TOTAL | 198679.2 | LBS |

NOTES:

ALL BARS ARE EPOXY COATED.

REINFORCING STEEL DIMENSIONS ARE OUT TO OUT OF BAR UNLESS OTHERWISE SPECIFIED.

SPLICES MAY BE OMITTED AT FABRICATORS OPTION...HOWEVER, IN SUCH CASE, FABRICATOR ASSUMES RESPONSIBILITY FOR FIT.

REGISTERED PROFESSIONAL ENGINEER
ARLIN O. BUCHANZELO
NO. 3191
STATE OF UTAH

| NO. | BY | DATE | REMARKS |
|---|---|---|---|
| | | | |
| | | | |
| | | | |

REVISIONS

UTAH DEPARTMENT OF TRANSPORTATION
SALT LAKE CITY, UTAH
STRUCTURES DIVISION

LEHI MAIN STREET INTERCHANGE

I-15 N.B. WIDENING OVER U.S.-91 & UPRR

REINFORCING STEEL SCHEDULE

| | | |
|---|---|---|
| DESIGN A.O.B. 12-4-91 | CHECK CF 6-92 | DWG. NO. C-343W |
| DRAWN | CHECK A.O.B. 12-4-91 | |
| QUANT. A.O.B. 12-4-91 | CHECK CF 6-92 | 143+89.14 STATION |
| APPROVAL RECOMM. DATE | GROUP LEADER | |
| APPROVED DATE | CHIEF STRUCTURAL ENGINEER | UTAH COUNTY |
| PROJECT NUMBER IR-15-6 (107)282 | | 19 OF 19 |

**FOR INFORMATION ONLY**

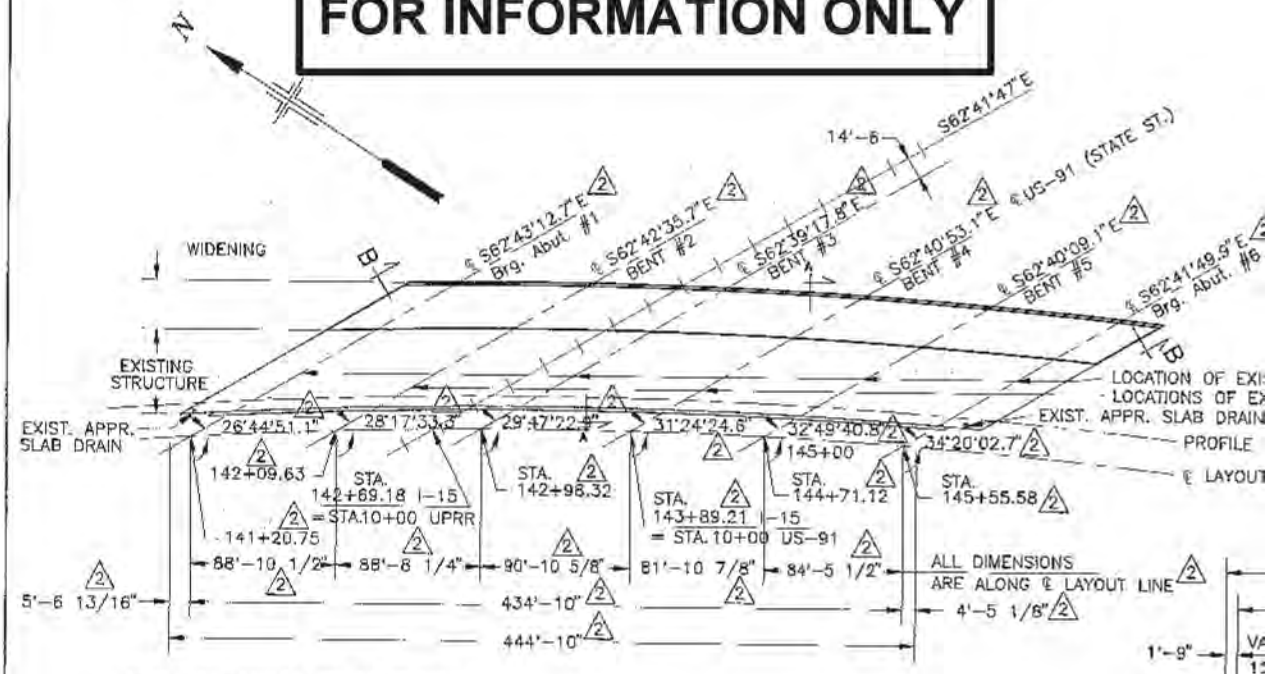


NOTE: ALL ANGLES ARE TO TANGENT.

PLAN

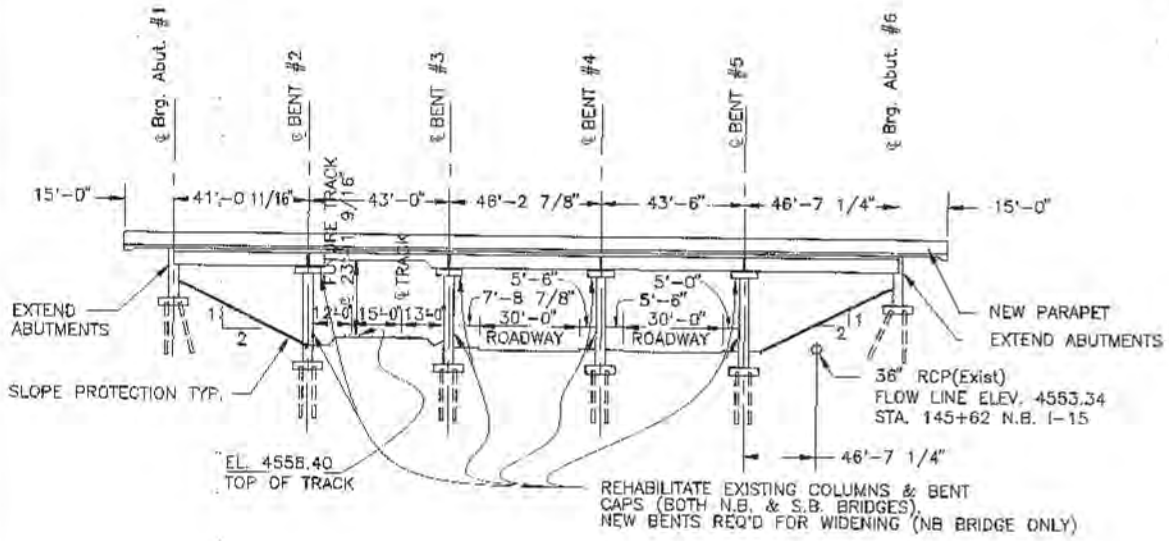


SECTION B-B THRU WIDENING
(NORMAL TO US-91)

FOR INFOR
FOR INFOR

C-343W

DGN Files: PW Projects\1672\4433\C-343W-RL.Form\Footer

02-MAY-2006

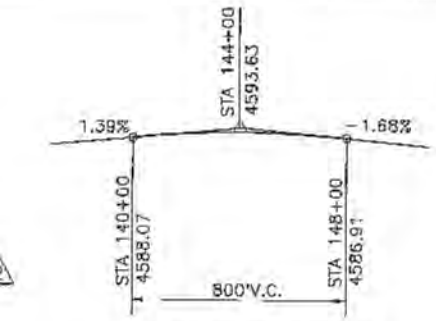


## I-15 EXISTING PROFILE
(ORIGINAL FINISHED GRADE)

## CURVE DATA 2

CURVE 1

D 1°45'
R 3274.04'
R.P=N 748,645.4101
E 1,904,430.1453

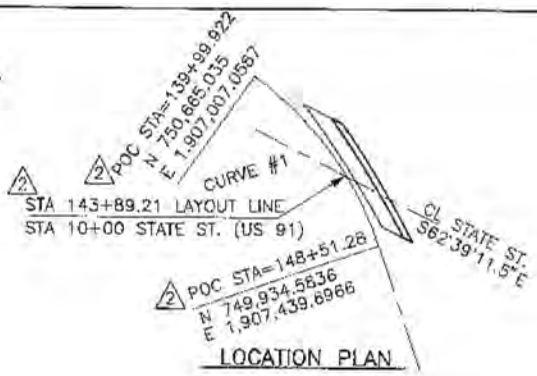


## LOCATION PLAN

STING JOINT CLOSURES
ISTING EXP. JOINT

LINE

LINE 2

NOTE: PROFILE GRADES ARE THEORETICAL BASED ON THE ORIGINAL PLANS AND MAY NEED TO BE ADJUSTED TO MEET EXISTING CONDITIONS. THE CONTRACTOR IS RESPONSIBLE FOR ANY ADJUSTMENTS AND PROPER FIT.

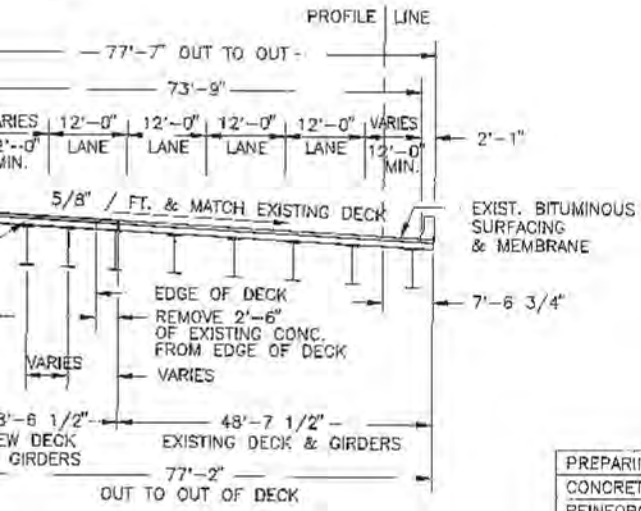


## SECTION A-A
(RADIAL)

## INDEX OF SHEETS


1. SITUATION AND LAYOUT
2. SOIL DATA
3. SOIL DATA
4. PILE LAYOUT AND FOUNDATION PLAN
5. CONCRETE PILE DETAILS
6. ABUTMENT #1 DETAILS
7. ABUTMENT #6 DETAILS
8. SEISMIC RETROFIT AND DELAMINATION REPAIR DETAILS
9. BENT DETAILS
10. FRAMING PLAN & SCREED DETAILS
11. GIRDER DETAILS
12. STEEL DETAILS
13. STEEL DETAILS
14. DECK PLAN AND SECTIONS
15. EXPANSION JOINT DETAILS
16. PARAPET DETAILS
17. CONCRETE SLOPE PROTECTION
18. REINFORCING STEEL SCHEDULE
19. REINFORCING STEEL SCHEDULE


## ORIGINAL PLAN SHEETS
(FROM DRG. C-343)

MATION ONLY SHEETS 4,7,15,21,22,23,24,25&27
MATION SHOWING REQUIRED WORK SHEETS 3,9,12,17,18,19,20&31

## GENERAL NOTES

1. MATERIALS, CONSTRUCTION AND WORKMANSHIP SHALL BE IN ACCORDANCE WITH THE UTAH DEPARTMENT OF TRANSPORTATION STANDARD SPECIFICATIONS FOR ROAD AND BRIDGE CONSTRUCTION, EDITION OF 1979, AND SUPPLEMENTS THERETO, WHICH ARE IN EFFECT AT THE DATE OF REQUEST FOR BIDS.
2. ALL REINFORCING STEEL SHALL BE DEFORMED BILLET-STEEL BARS CONFORMING TO ASTM DESIGNATION A615, GRADE 60.
3. ALL STRUCTURAL STEEL SHALL BE STRUCTURAL CARBON STEEL CONFORMING TO AASHTO DESIGNATION M-270 GRADE 36
4. EXPOSED CONCRETE CORNERS SHALL BE CHAMFERED 3/4" EXCEPT WHERE NOTED OTHERWISE.
5. COVER TO REINFORCING STEEL SHALL BE 2" EXCEPT WHERE NOTED OTHERWISE.
6. ALL CAST-IN-PLACE CONCRETE SHALL BE CLASS AA(AE) EXCEPT WHERE SPECIFIED OTHERWISE.
7. ALL REINFORCING STEEL SHALL BE EPOXY COATED.

## DESIGN DATA

HS 20-44 OR INTERSTATE ALTERNATE LOADING IN ACCORDANCE WITH AASHTO SPECIFICATION OF 1989 AND INTERIM SPECIFICATIONS.
CAST-IN-PLACE CONCRETE: fc = 1,400 PSI, fs (REINF) = 24,000 PSI, N = 8
STRUCTURAL STEEL = fs = 20,000 PSI
WEARING SURFACE: 1/2" CONCRETE 35 LBS/SQ. FT. FUTURE WEARING SURFACE.
DESIGN SPEED: I-15 70 MPH, US-91 45 MPH

## QUANTITIES

| ITEM | ESTIMATED | UNIT | AS CONST. |
|---|---|---|---|
| PREPARING EXISTING STRUCTURE FOR WIDENING | 1 | LUMP | |
| CONCRETE CLASS AA (AE) EST. QUANT. 994 CU. YDS) | 1 | LUMP | |
| REINFORCING STEEL (EPOXY COATED) | 198,679 | LBS. | |
| STRUCTURAL STEEL (EST. QUANT. 281,195 LBS.) SPECIALITY ITEM | 1 | LUMP | |
| DRIVEN PILES | 5,621 | LIN. FT. | |
| FURNISHING PILE DRIVING EQUIPMENT | 1 | LUMP | |
| CONCRETE SLOPE PROTECTION | 858 | SQ. YDS. | |
| DELAMINATION REPAIR | 7,300 | SQ. FT. | |
| CABLE RESTRAINT AND ANCHORAGE | 60 | EACH | |
| CONCRETE SEALANT | 18,362 | SQ. FT. | |
| WATERPROOFING MEMBRANE | 1,568 | SQ. YDS. | |
| BITUMINOUS SURFACE MIX (1/2" MAX.) | 125 | CU. YDS. | |
| BITUMINOUS SURFACING REMOVAL (1"± DEPTH) | 2,465 | SQ. YDS. | |
| PLANT MIX BITUMINOUS SEAL COAT (TYPE A) | 111 | CU. YDS. | |
| BITUMINOUS SURFACING REMOVAL (FULL DEPTH) | 75 | SQ. YDS. | |
| EXPANSION JOINT MODIFICATION | 1 | LUMP | |
| CONCRETE SLOPE PROTECTION REMOVAL | 196 | SQ. YDS. | |
| GRANULAR BACKFILL BORROW | 217 | CU. YDS. | |

REGISTERED PROFESSIONAL ENGINEER BRUCE O. MCCONKIE No. 5795 STATE OF UTAH

| | | | |
|---|---|---|---|
| 2 | AOB | 11/92 | GEOMETRIC LAYOUT |
| 1 | BMC | 9/92 | |
| | BY | DATE | REVISIONS |

UTAH DEPARTMENT OF TRANSPORTATION
SALT LAKE CITY, UTAH
STRUCTURES DIVISION

LEHI MAIN STREET INTERCHANGE
I-15 N.B. WIDENING OVER US-91 & UPRR
SITUATION AND LAYOUT

DESIGNED AOB 4-2-91 CHECKED CF 9-93
DRAWN BJ 5-6-91 CHECKED AOB 8-14-91
REVISED AOB 9-5-91 CHECKED CF 9-92
ACCEPTED FOR RECORD 10/1/92 DATE — 143+89.44 STATION
REVIEWED DATE — UTAH COUNTY
APPROVED DATE — DRG. NO. C-343W

IR-15-6(107)282
PROJECT NUMBER

SHEET 1 OF 19

FILE: SSSTR1.DWG 1:50 DR16 11-23-92

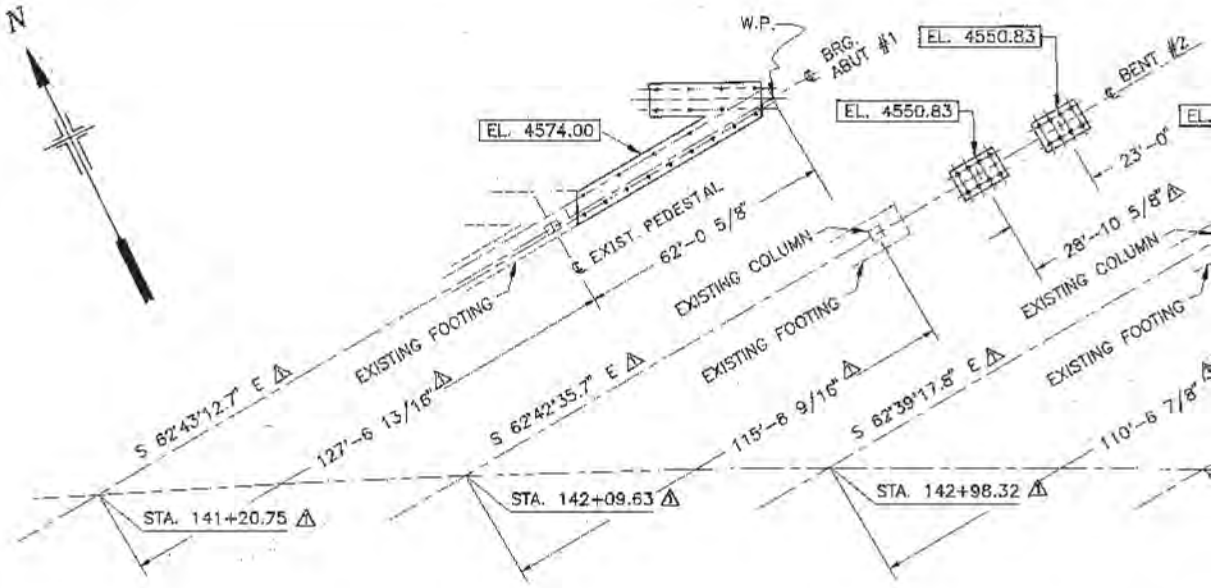


FOUNDATION

| PILE DATA | | | | | | | | | |
|---|---|---|---|---|---|---|---|---|---|
| LOCATION | ESTIMATED PILE TIP ELEV. (FT.) | ELEV. OF MIN. ACCEPTABLE PILE PENE-TRATION (FT.) | ALLOWABLE PILE LOAD EXCEPT G.P. VII (KIPS) | CALC. PILE LOAD EXCEPT G.P. VII (KIPS) | ULT. PILE LOAD (KIPS) | CALC. PILE LOAD G.P. VII (KIPS) | SKIN FRICTION (KIPS) | CALC. UPLIFT G.P. VII | E E CON |
| ABUTMENTS | 4505.00 | 4509.00 | 100 | 85 | 450 | --- | 216 | --- | |
| BENTS | 4505.00 | 4509.00 | 100 | 89 | 450 | 310 | 216 | 215 | |

**FOR INFORMATION ONLY**

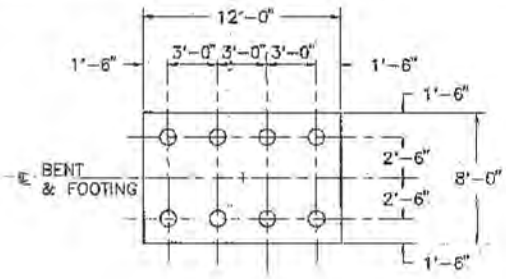


TYPICAL BENT FOOTING DETAIL

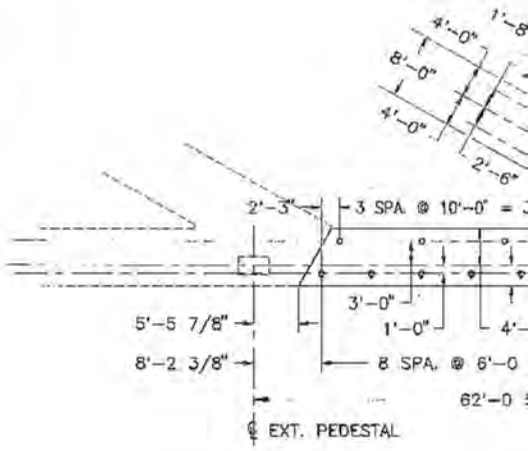


ABUTMENT #1 DE

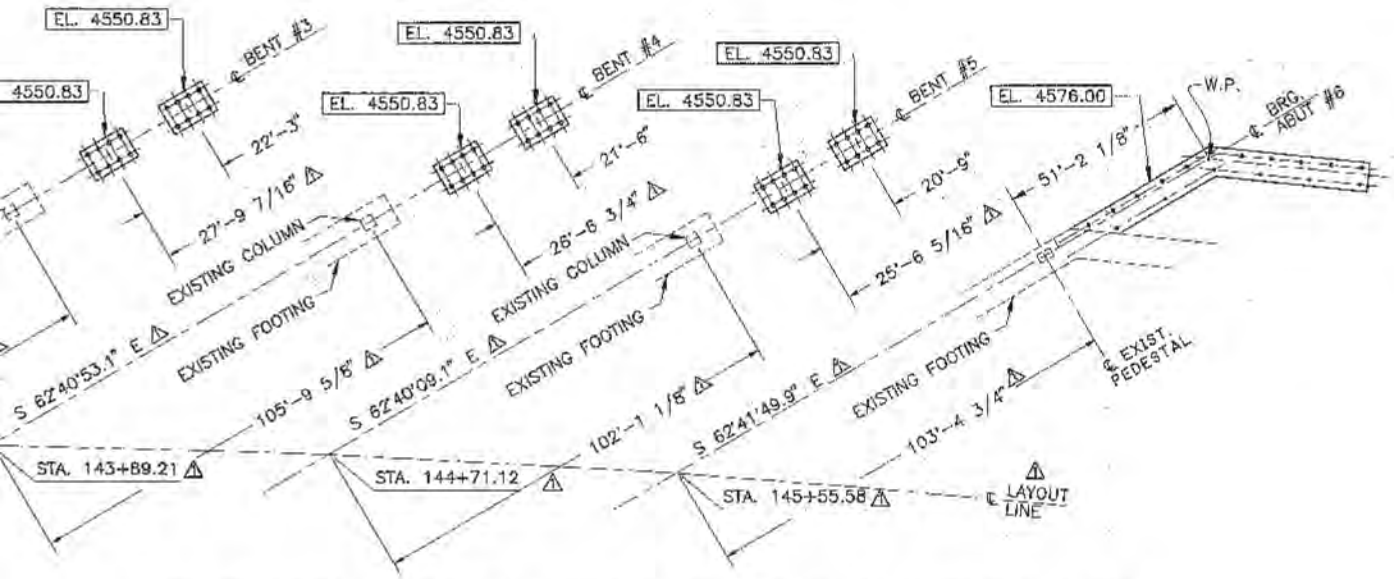


NOTE: FTG. ELEVATIONS ARE THEORETICAL BASED ON THE ORIGINAL PLANS AND MAY NEED TO BE ADJUSTED TO MEET EXISTING CONDITIONS. THE CONTRACTOR IS RESPONSIBLE FOR ANY ADJUSTMENTS AND PROPER FIT.

I PLAN

NOTES:

1. ABUTMENT AND BENT BEARINGS AS SHOWN
2. ELEVATIONS AT BOTTOM OF FOOTING ARE SHOWN ENCLOSED IN RECTANGLES. e.g. EL. 4576.00
3. PILE TIP ELEVATIONS GIVEN ARE APPROXIMATE ONLY AND SHALL BE VERIFIED AT THE TIME OF CONSTRUCTION IN ACCORDANCE WITH SPECIFICATIONS.
4. ∘ INDICATES BATTERED PILES

| |
|---|
| |
| PILE TIP ELEV. AS NSTRUCTED |
| |
| |

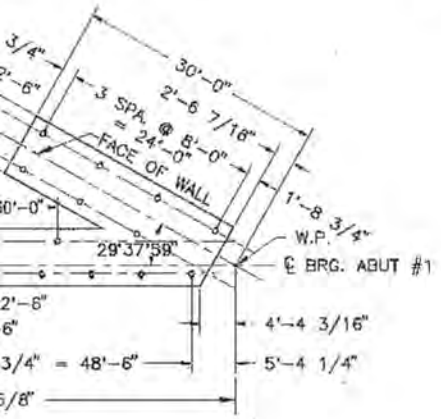


TAIL

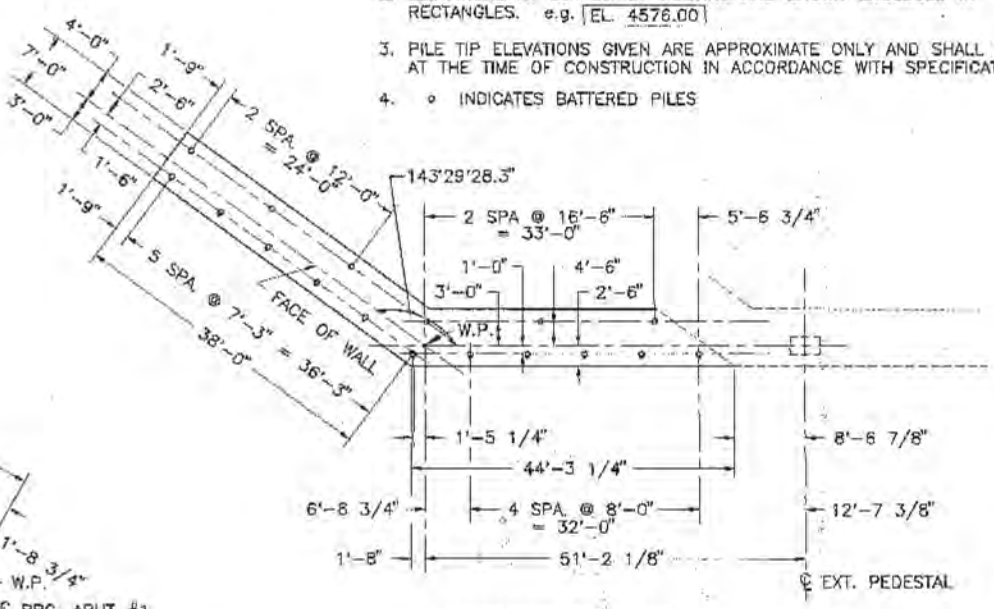


ABUTMENT #6 DETAIL

REGISTERED PROFESSIONAL ENGINEER ARLIN O. BLOOMFIELD No. 3131 STATE OF UTAH

| | | | |
|---|---|---|---|
| ⚠ | AOB | 11/92 | GEOMETRIC LAYOUT |
| NO | BY | DATE | REMARKS |

REVISIONS

UTAH DEPARTMENT OF TRANSPORTATION
SALT LAKE CITY, UTAH
STRUCTURES DIVISION

LEHI MAIN STREET INTERCHANGE
I-15 N.B. WIDENING OVER US-91 & UPRR
PILE LAYOUT AND FOUNDATION PLAN

| | | | |
|---|---|---|---|
| DESIGN 6-12-91 | CHECK CF 9-92 | | |
| DRAWN -2-91 | CHECK AOB 8-14-91 | 143+89.44 | |
| SHEET AOB 8-22-91 | CHECK CF 9-92 | STATION | |
| APPROVAL RECOMM. | | UTAH | |
| APPROVED | | DRG. NO. | |
| | | C-343W | |
| | | IR-15-6(107)282 | SHT 4 OF 19 |

FILE: FILE: SSSTR4.DWG 1:240 DR13 11-23-92

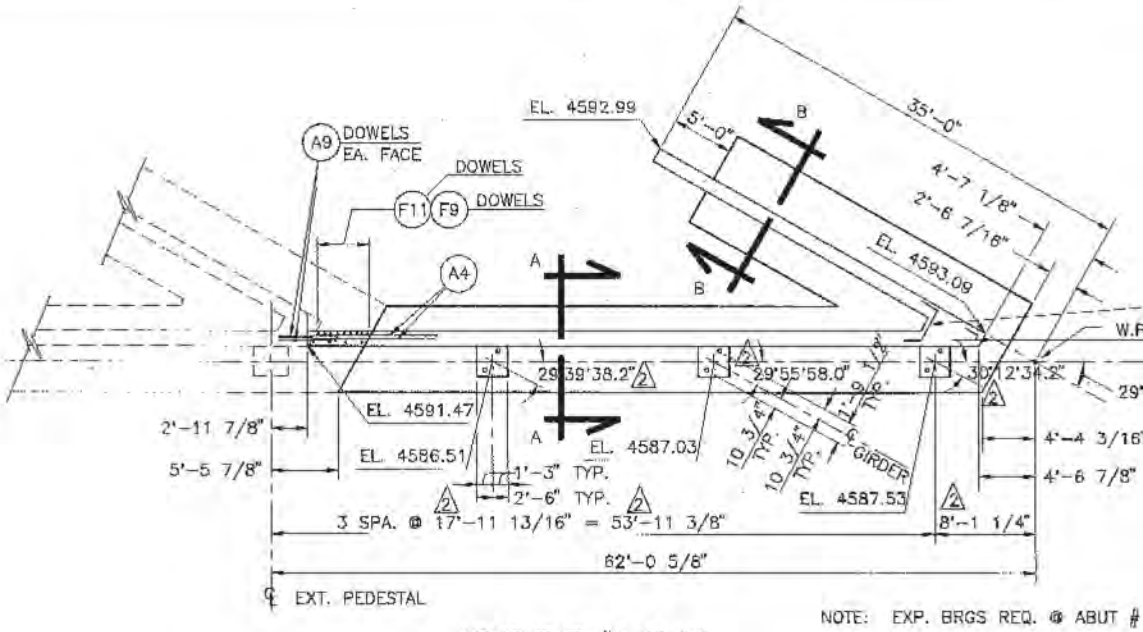


NOTE: EXP. BRGS REQ. @ ABUT #

## ABUTMENT #1 PLAN

NOTE: DRILL AND GROUT DOWEL BARS INTO EXISTING CONCRETE
EMBED #5 BARS 1'-3", EMBED #6 BARS 1'-6"

NOTE: BEARIN
ELEVATIONS AR
THE ORIGINAL
ADJUSTED TO
THE CONTRACT
ADJUSTMENTS

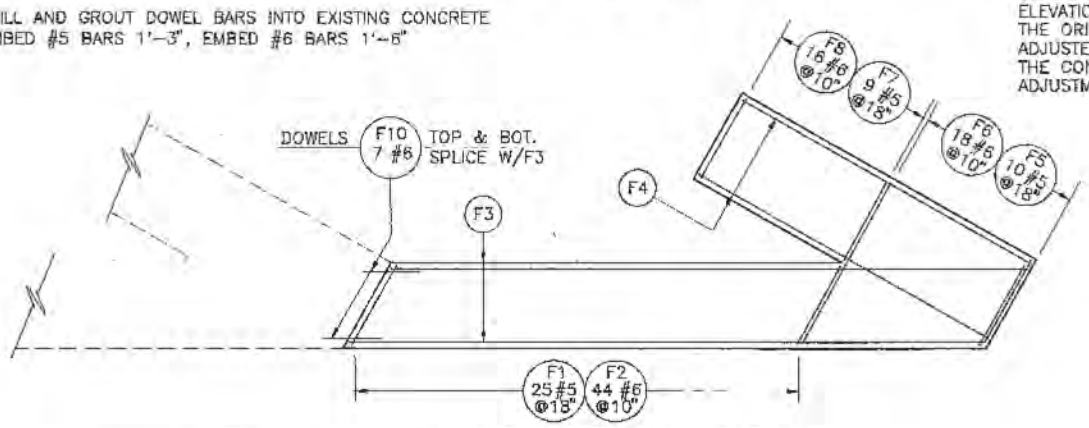


## ABUTMENT #1 STEEL DETAIL

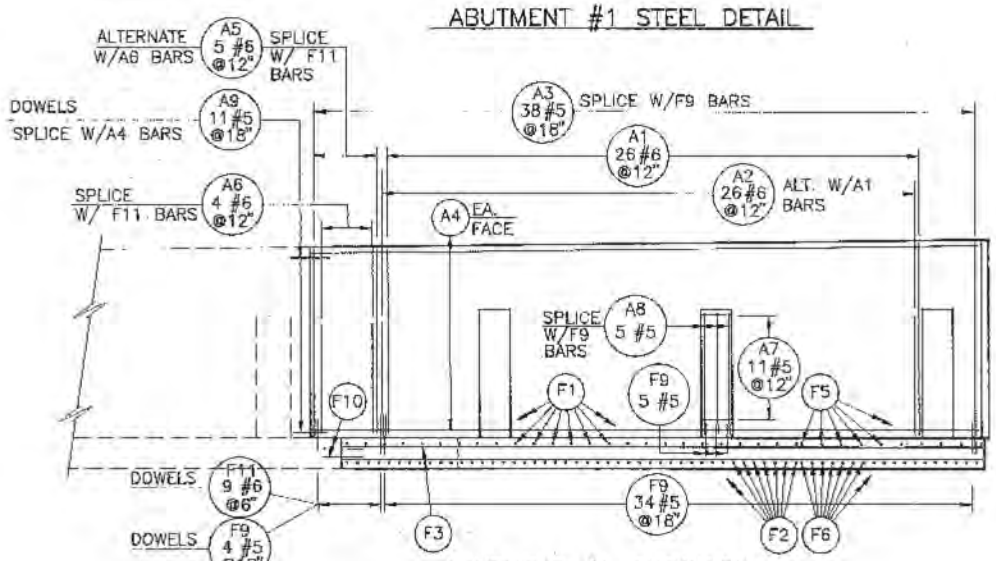


## ABUTMENT #1 ELEVATION

DGN Files IP PWBridge\1672\4433.C-049W-RB_Form\Folder
02-MAY-2005

A10 11#5

A11 11#5

℄ BRG. ABUT #1

37'59"△2

G PEDESTAL AND WALL
E THEORETICAL, BASED ON
PLANS AND MAY NEED TO BE
MEET EXISTING CONDITIONS.
OR IS RESPONSIBLE FOR ANY
AND PROPER FIT.

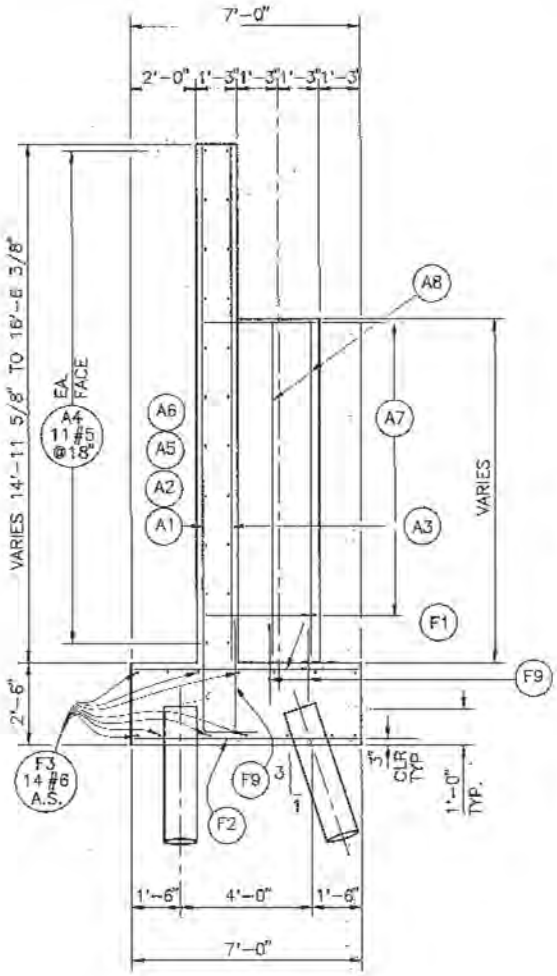


SECTION A-A

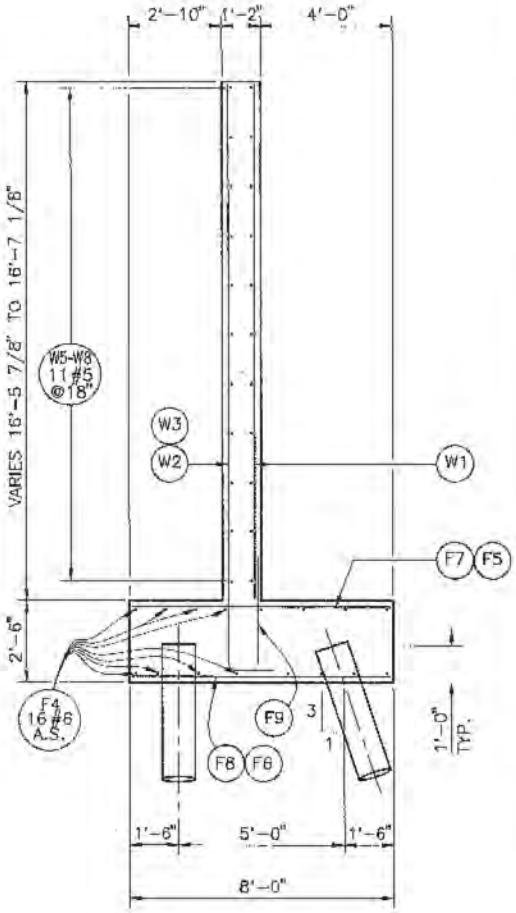


SECTION B-B

**FOR INFORMATION ONLY**

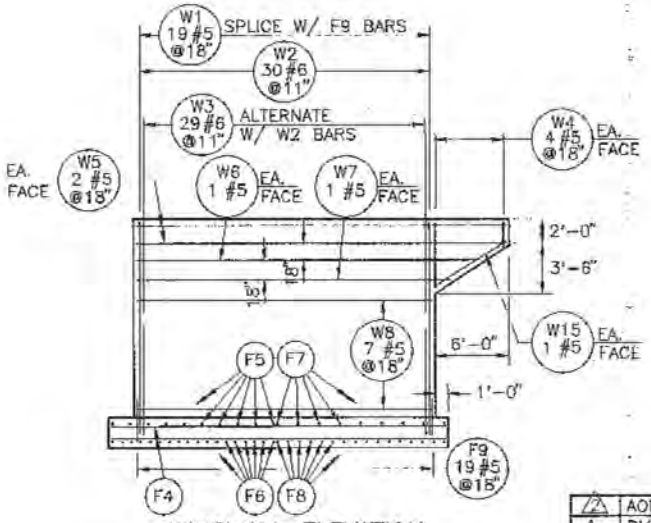


WINGWALL ELEVATION

| CONCRETE QUANTITIES | |
|---|---|
| LOCATION | CU. YDS. |
| ABUTMENT WALL | 58.21 |
| PEDESTALS | 7.31 |
| FOOTINGS | 52.97 |
| TOTAL | 118.49 |

UTAH DEPARTMENT OF TRANSPORTATION
STRUCTURES DIVISION

LEHI MAIN STREET INTERCHANGE
I-15 N.B. WIDENING OVER US-91 & UPRR
ABUTMENT #1 DETAILS

| | | | |
|---|---|---|---|
| DESIGN AOB 8-1-91 | CHECK CF 9-92 | | |
| DRAWN BJ 8-1-91 | CHECK AOB 8-16-91 | | 143+88.44 |
| CHECK AOB 8-16-91 | CHECK CF 9-92 | | STATION |
| REVISION RECOMM. 12/1/92 DATE | | | UTAH |
| APPROVED DATE | | | DRG. NO. |
| | | | C-343W |
| IR-15-6(107)282 | | | SHT 6 OF 19 |

REGISTERED PROFESSIONAL ENGINEER ARUN O. BLOOMFIELD No. 3191 STATE OF UTAH

| NO | BY | DATE | REVISIONS |
|---|---|---|---|
| 2 | AOB | 11/92 | GEOMETRIC LAYOUT |
| 1 | BMC | 9/92 | |

FILE: SSSTR6.DWG 1:80 DR10 11-23-92

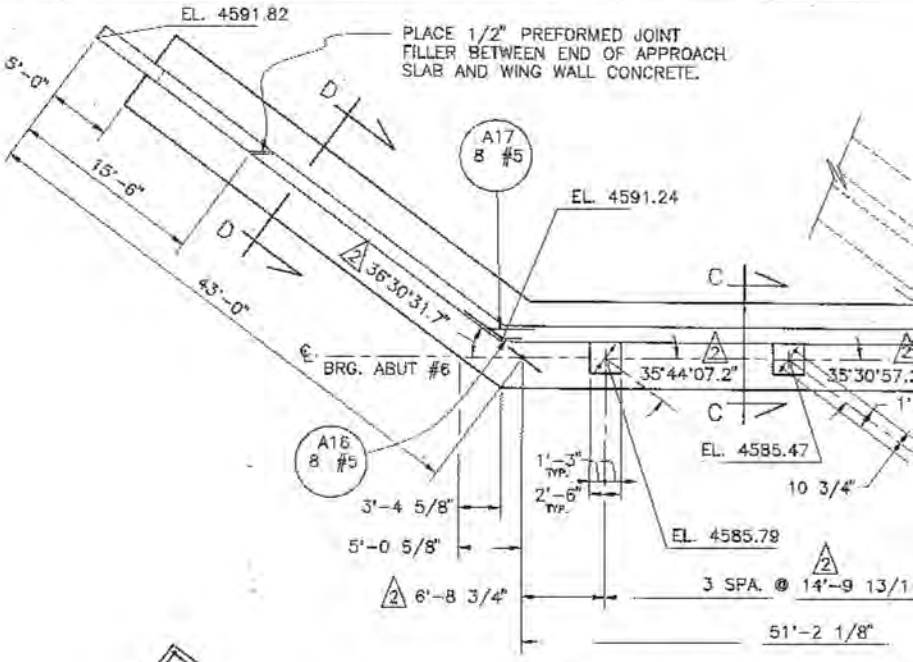


ABUTMENT #6 PLAN

NOTE:

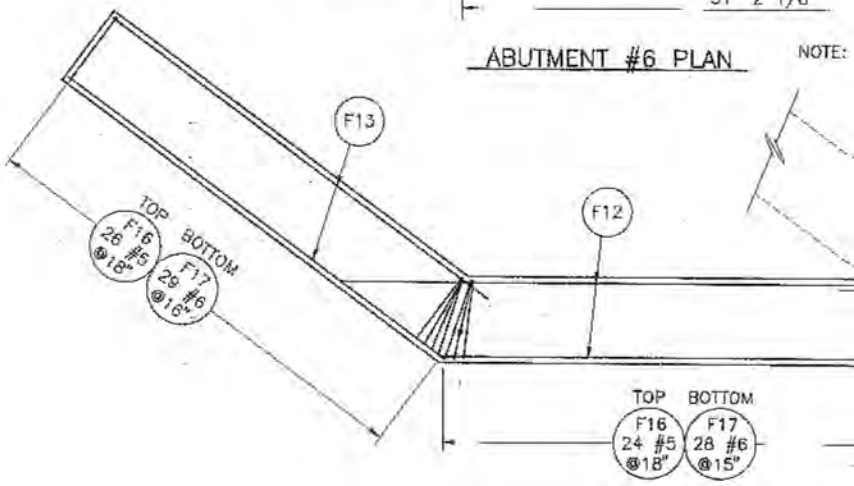


ABUTMENT #6 STEEL DETAIL

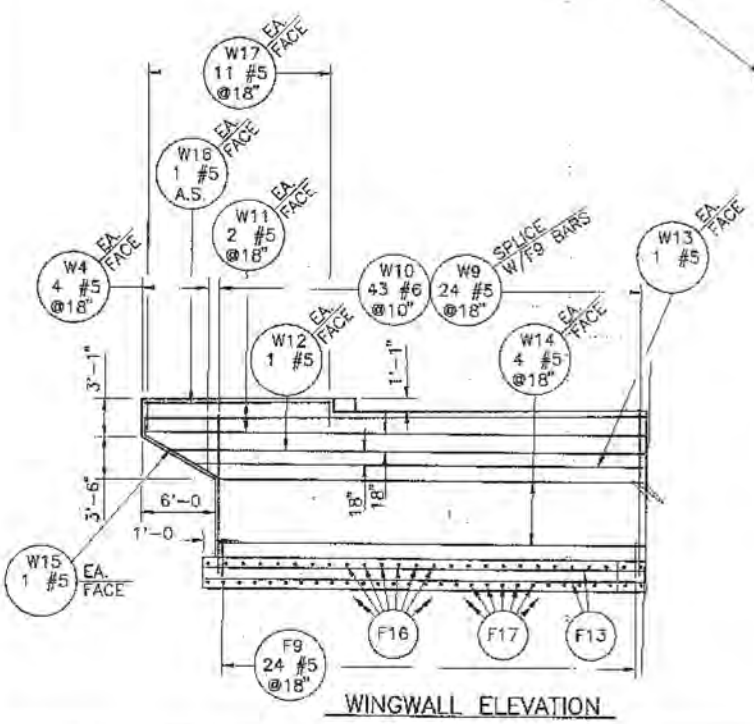


WINGWALL ELEVATION

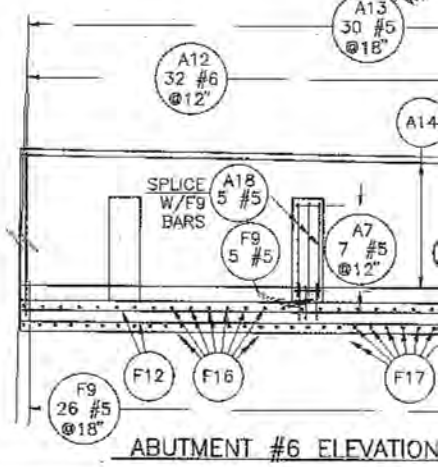


ABUTMENT #6 ELEVATION

DGN: Files 1Pl.Pw/Bridge\U672\4433.C-040W-07-Form1.dgn

02-MAY-2005

NOTE: BEARING PEDESTAL AND WALL ELEVATIONS ARE THEORETICAL BASED ON THE ORIGINAL PLANS AND MAY NEED TO BE ADJUSTED TO MEET EXISTING CONDITIONS. THE CONTRACTOR IS RESPONSIBLE FOR ANY ADJUSTMENT AND PROPER FIT.

**FOR INFORMATION ONLY**

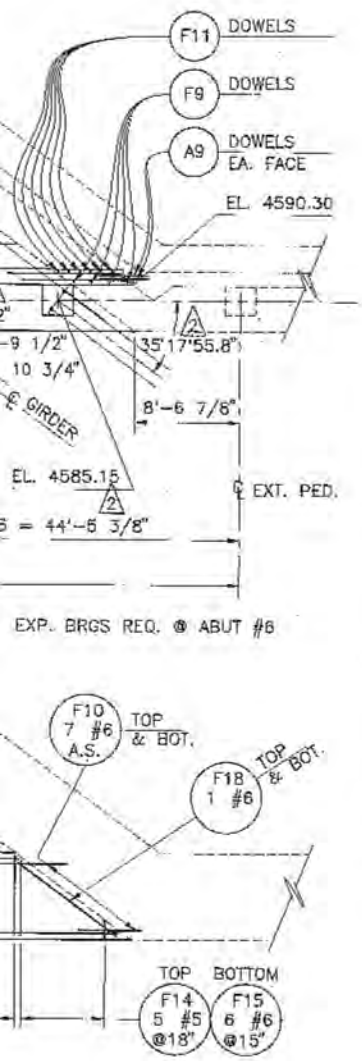


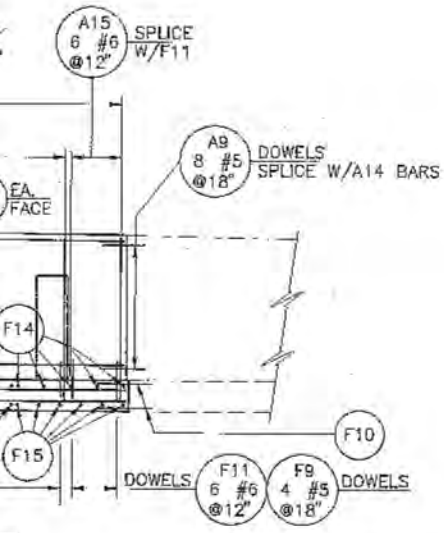


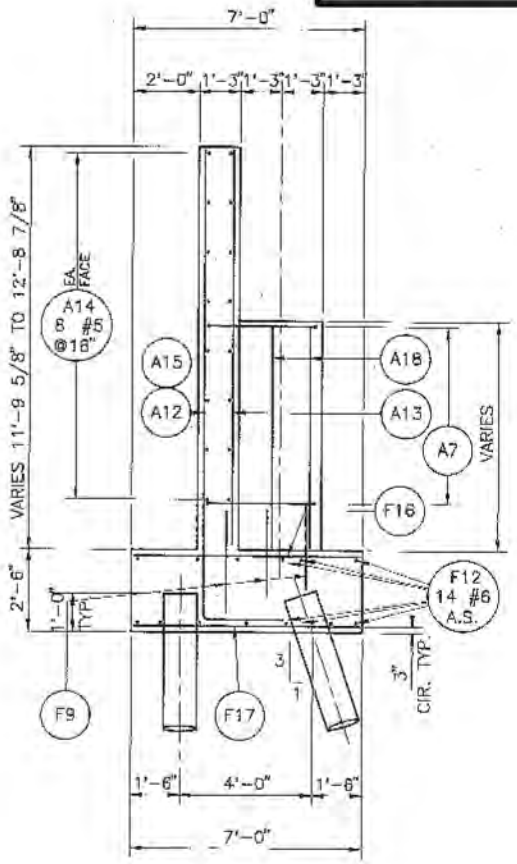


SECTION C-C

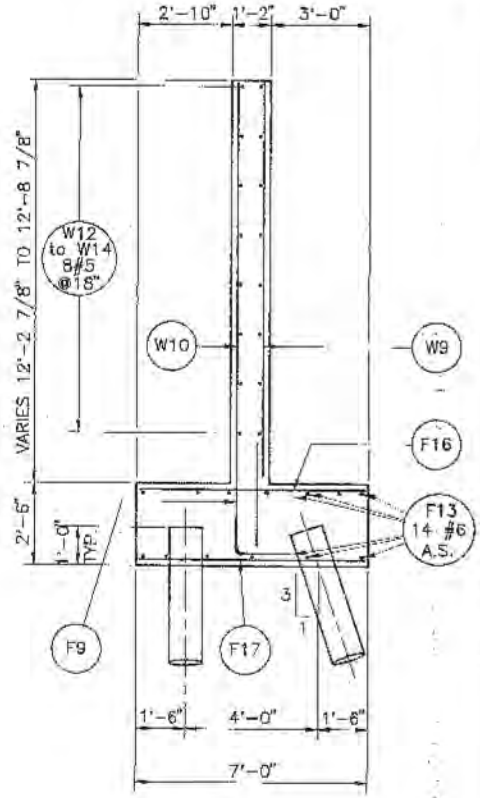


SECTION D-D

| CONCRETE QUANTITIES | |
|---|---|
| LOCATION | CU YD. |
| ABUTMENT WALL | 45.75 |
| PEDESTALS | 4.84 |
| FOOTINGS | 58.54 |
| TOTAL | 109.13 |

UTAH DEPARTMENT OF TRANSPORTATION
SALT LAKE CITY, UTAH
STRUCTURES DIVISION

LEHI MAIN STREET INTERCHANGE
I-15 N.B. OVER US-91 & UPRR
ABUTMENT #6 DETAILS

| | | | |
|---|---|---|---|
| DESIGN AOB 5-25-91 | CHECK CF 9-92 | | |
| DRAWN BJ 5-29-91 | CHECK AOB 8-16-91 | 143+89.44 | STATION |
| QUAN AOB 8-16-91 | CHECK CF 9-92 | | |
| APPROVAL RECOMM. 12/1/92 | | UTAH | COUNTY |
| APPROVED | | DRG. NO. | |
| | | C-343W | |
| | | IR-15-6(107)282 | PROJECT NUMBER |
| | | SHT 7 OF 19 | |

REGISTERED PROFESSIONAL ENGINEER ARLIN O. BLOOMFIELD NO. 3161 STATE OF UTAH

| | | | | |
|---|---|---|---|---|
| 2 | AOB | 11/92 | GEOMETRIC LAYOUT | |
| 1 | BMC | 9/72 | | |
| NO | BY | DATE | REMARKS | |

REVISIONS

FILE: SSSTR7.DWG 1:80 DRDS 11-23-92

| BENT | DIMENSIONS | | | | | | | | | |
|---|---|---|---|---|---|---|---|---|---|---|
| | A △1 | B △1 | C △1 | D | E | F | G | H | J | K |
| #2 | 17'-2 3/8" | 34'-4 3/4" | 3'-2 1/8" | 40'-9" | 23'-0" | 8'-10 1/2" | 27'-8 5/8" | 27'-1 3/16" | 11 15/16" | 12 1/16" |
| #3 | 16'-7 1/8" | 33'-2 1/4" | 3'-1 7/8" | 39'-6" | 22'-3" | 8'-7 1/2" | 27'-7 13/16" | 27'-1 3/16" | 11 1/2" | 11 9/16" |
| #4 | 15'-10 3/4" | 31'-9 9/16" | 3'-2 3/4" | 38'-3" | 21'-6" | 8'-4 1/2" | 27'-3 5/8" | 26'-9 3/8" | 11 1/16" | 11 1/8" |
| #5 | 15'-4 1/4" | 30'-8 8/16" | 3'-1 3/4" | 37'-0" | 20'-9" | 8'-1 1/2" | 26'-9 15/16" | 26'-4 3/16" | 10 5/8" | 10 11/16" |

| BENT | ELEVATIONS | | | | | | | |
|---|---|---|---|---|---|---|---|---|
| | a | b | c | d | e | f | g | h |
| #2 | 4587.76 | 4587.30 | 4586.83 | 4587.63 | 4587.17 | 4586.70 | 4583.22 | 4582.60 |
| #3 | 4587.60 | 4587.18 | 4586.76 | 4587.55 | 4587.13 | 4586.71 | 4583.15 | 4582.60 |
| #4 | 4587.27 | 4586.88 | 4586.50 | 4587.18 | 4586.79 | 4586.41 | 4582.80 | 4582.28 |
| #5 | 4586.70 | 4586.35 | 4586.00 | 4586.70 | 4586.35 | 4586.00 | 4582.33 | 4581.85 |

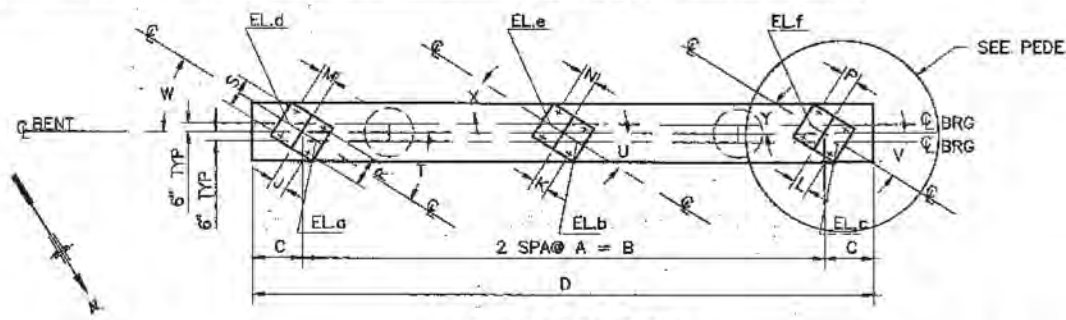


PLAN OF BENT CAP

NOTE: DISTANCE BETWEEN ANCHOR BOL
FOR ALL GIRDERS ON SAME SIDE OF C

**FOR INFORMATION ONLY**

NOTE: BEARIN
THEO
PLAN
TO M
CONT
ADJU

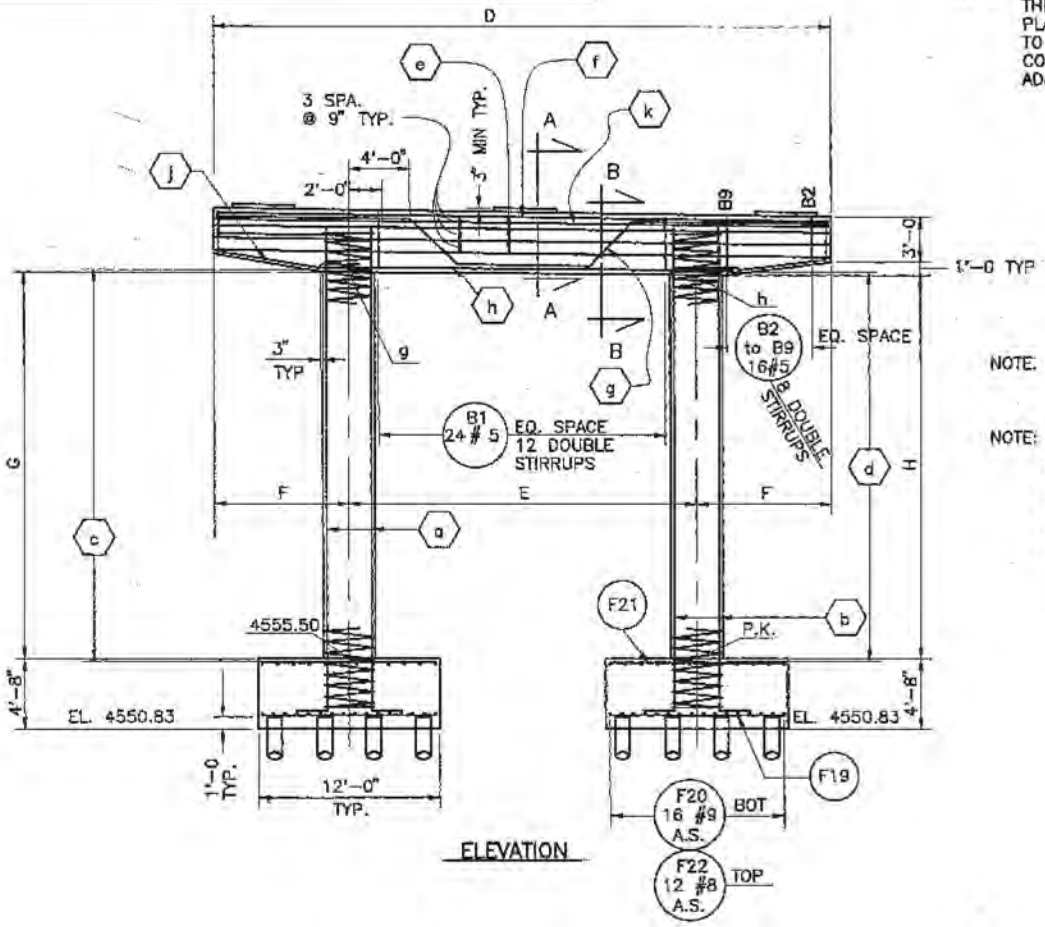


ELEVATION

NOTE: B2
A

NOTE: E
3'
T
B
H
O
IN

02-MAY-2005 DGN Files IPL PWFedeal1672\4433.C-040W-04-Form1.dgn

| INE BENT CAP TO CENTERLINE BEARING | | | | DISTANCE BETWEEN ANCHOR BOLTS | | ANGLES | | | | | |
|---|---|---|---|---|---|---|---|---|---|---|---|
| L | M | N | P | R | S | ②T | ②U | ②V | W② | ②X | ②Y |
| 12 1/8" | 11 1/2" | 11 9/16" | 11 5/8" | 1'-9 | 2'-1 1/2 | 30°11'57.2" | 29°55'21.0" | 29°39'01.2" | 31°35'58.7" | 31°22'20.2" | 31°08'51.7" |
| 11 5/8" | 11 1/16" | 11 1/8" | 11 3/16" | 2'-1 | 1'-9 1/2 | 31°32'40.8" | 31°19'02.3" | 31°05'33.8" | 32°58'19.1" | 32°43'19.7" | 32°28'32.7" |
| 11 3/16" | 10 5/8" | 10 11/16" | 10 3/4" | 1'-9 | 1'- 9 1/2 | 32°59'54.4" | 32°44'55.0" | 32°30'08.0" | 34°22'48.5" | 34°09'02.7" | 33°55'26.5" |
| 10 3/4" | 10 5/16" | 10 3/8" | 10 3/8" | 1'-9 | 1'-9 | 34°22'04.5" | 34°08'18.7" | 33°54'42.5" | 35°42'26.4" | 35°29'16.4" | 35°16'15.0" |

| Bent | ⓐ | ⓑ | ⓒ | ⓓ | ⓔ | ⓕ | ⓖ | ⓗ | ⓙ | ⓚ |
|---|---|---|---|---|---|---|---|---|---|---|
| #2 | C1-19#11 A.S. | C2-19#11 A.S. | C9-1#4 A.S. | C10-1#4 A.S. | B12-3#5 EA.FACE | B16-4#11 | B20-2#11 | B24-4#11 | B28-4#5 | B10-4#11 |
| #3 | C3-19#11 A.S. | C4-19#11 A.S. | C11-1#4 A.S. | C12-1#4 A.S. | B13-3#5 EA.FACE | B17-4#11 | B21-2#11 | B25-4#11 | B29-4#5 | B11-4#11 |
| #4 | C5-19#11 A.S. | C6-19#11 A.S. | C13-1#4 A.S. | C14-1#4 A.S. | B14-3#5 EA.FACE | B18-4#11 | B22-2#11 | B26-4#11 | B30-4#5 | B32-4#11 |
| #5 | C7-19#11 A.S. | C8-19#11 A.S. | C15-1#4 A.S. | C16-1#4 A.S. | B15-3#5 EA.FACE | B19-4#11 | B23-2#11 | B27-4#11 | B31-4#5 | B33-4#11 |

NOTE: SEE SHEET 13 FOR LOCATION OF FIXED BRGS. &. EXP. BRGS.

STAL DETAIL

TS IS TYP.
AP.

NG PEDESTAL ELEVATIONS ARE
RETICAL BASED ON THE ORIGINAL
S AND MAY NEED TO BE ADJUSTED
EET EXISTING CONDITIONS. THE
RACTOR IS RESPONSIBLE FOR ANY
STMENTS AND PROPER FIT.

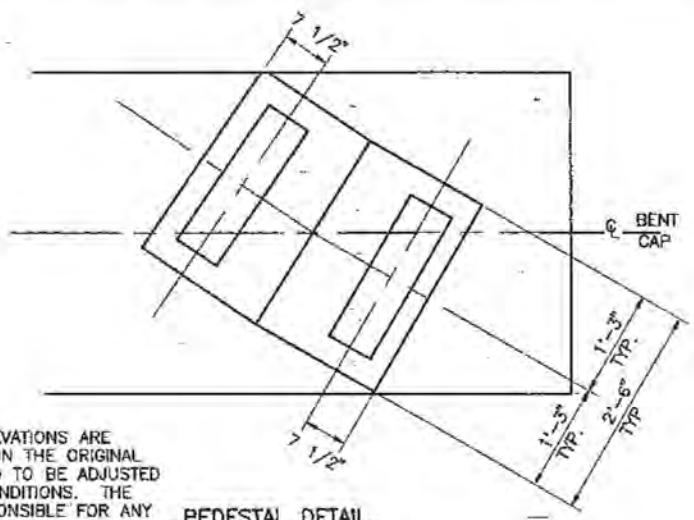


PEDESTAL DETAIL

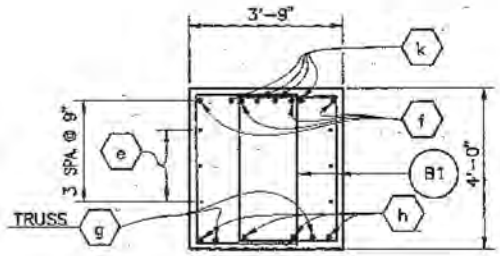


SECTION A-A

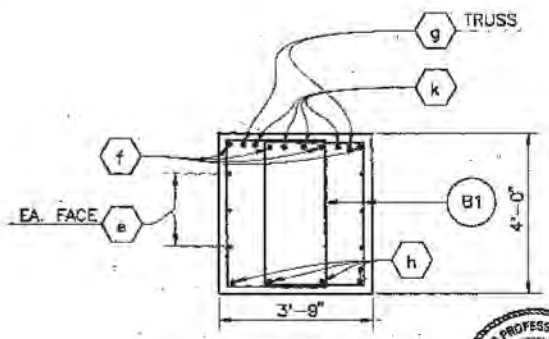


SECTION B-B

2 TO B9 SPACE
T 9 1/2" MAX.

XTEND SPIRAL REINFORCEMENT
-0" INTO CAP AND FTG.
YPICAL. SPIRAL REINF. MAY
E SPLICED IN THE MIDDLE
ALF OF THE COLUMN HEIGHT
NLY. SPLICE LENGTH OF 30
CHES REQUIRED.

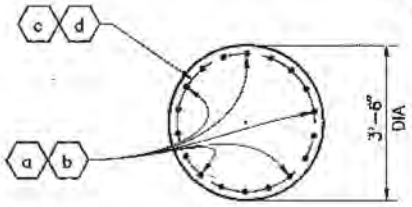


SECTION C-C

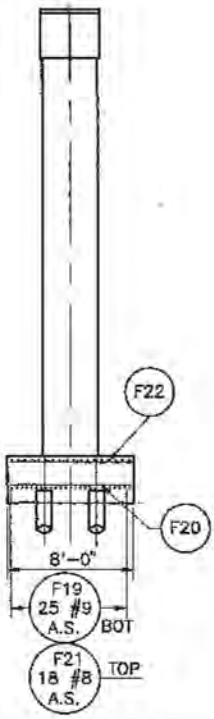


END ELEVATION

| CONCRETE QUANTITIES (CU. YDS.) | | | | |
|---|---|---|---|---|
| LOCATION | CAP | COLUMNS | FOOTINGS | BENT TOTAL |
| BENT #2 | 21.91 | 19.54 | 33.19 | 74.64 |
| BENT #3 | 21.24 | 19.51 | 33.19 | 73.94 |
| BENT #4 | 20.57 | 19.27 | 33.19 | 73.03 |
| BENT #5 | 19.92 | 18.95 | 33.19 | 72.06 |
| TOTAL | | | | 293.67 |

| NO. | BY | DATE | REMARKS |
|---|---|---|---|
| (2) | AOB | 12/92 | CHANGE ANGLES |
| 1 | AOB | 11/92 | DIMENSIONS |

REVISIONS

UTAH DEPARTMENT OF TRANSPORTATION
SALT LAKE CITY, UTAH
STRUCTURES DIVISION

LEHI MAIN STREET INTERCHANGE
I-15 N.B. WIDENING OVER US-91 & UPRR
BENT DETAILS

| | | | |
|---|---|---|---|
| DESIGN AOB 7-8-91 | CHECK CE 6-92 | | |
| DRAWN SJ 8-4-91 | CHECK AOB 8-14-91 | 143+89.44 | |
| CHANGE AOB 8-22-91 | CHECK | REGION UTAH | |
| REGISTERED PROFESSIONAL ENGINEER | | COUNTY | |
| APPROVED | | DRG. NO. C-343W | |
| IR-15-6(107)282 | | SHT 9 OF 19 | |

REGISTERED PROFESSIONAL ENGINEER ARUN O. BLOOMFIELD No. 3101 STATE OF UTAH

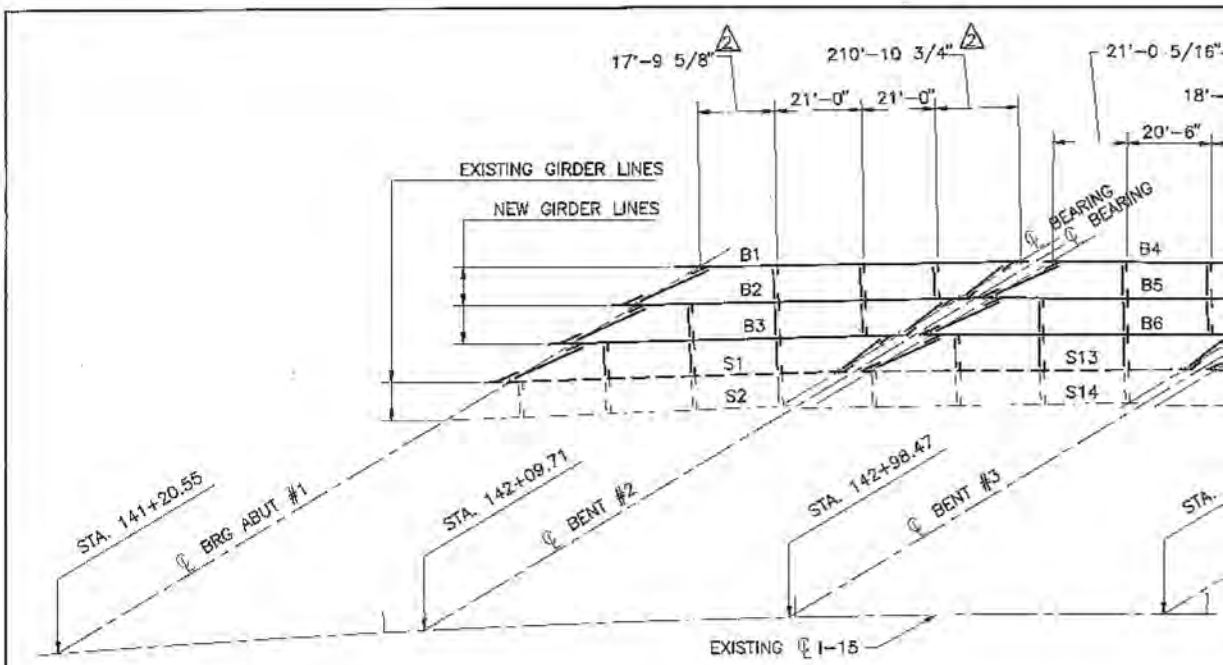


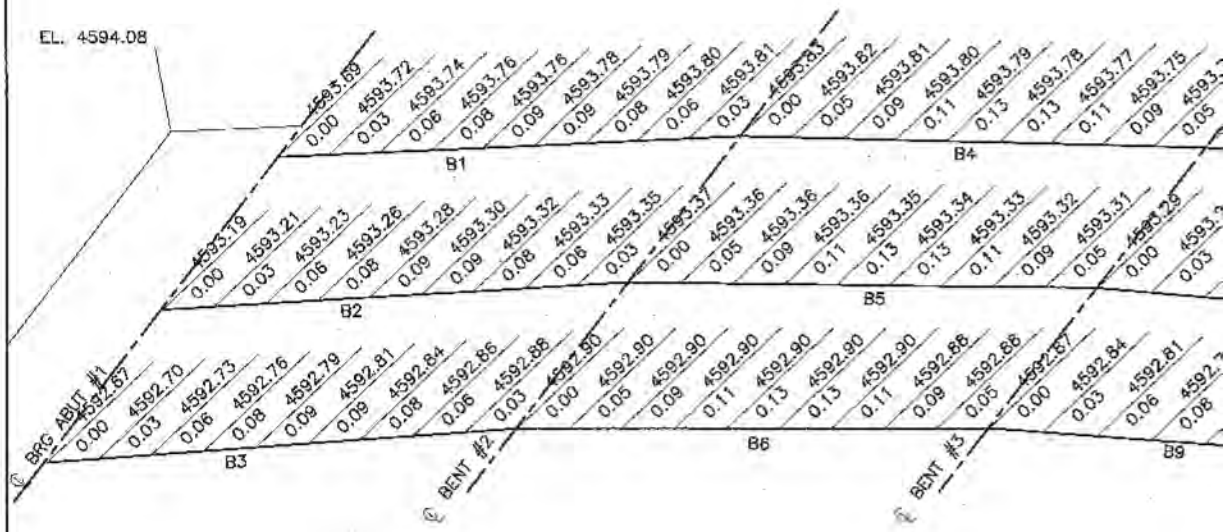


| SCREED SPACING | | | |
|---|---|---|---|
| GIRDER | NO. OF SPACES | SPACING 2 | TOTAL 2 |
| B1 | 9 | 9'-0 15/16"(-) | 81'-8 1/4" |
| B2 | 9 | 9'-1 13/16"(+) | 82'-4 3/8" |
| B3 | 9 | 9'-2 3/4"(-) | 83'-0 5/8" |
| B4 | 9 | 9'-2 1/16"(-) | 82'-6 1/2" |
| B5 | 9 | 9'-2 3/4"(-) | 83'-0 1/2" |
| B6 | 9 | 9'-3 3/8"(+) | 83'-6 5/8" |
| B7 | 9 | 9'-5 1/8"(-) | 84'-10 1/8" |
| B8 | 9 | 9'-5 15/16"(-) | 85'-5 1/8" |
| B9 | 9 | 9'-6 11/16"(+) | 86'-0 1/4" |
| B10 | 8 | 9'-7 3/4"(+) | 77'-2 1/4" |
| B11 | 8 | 9'-8 7/16"(+) | 77'-7 5/8" |
| B12 | 8 | 9'-9 1/4"(+) | 78'-1" |
| B13 | 8 | (4) 9'+11 11/16"(+) | (4) 79'-10 5/8" |
| B14 | 8 | 10'-0 1/2"(+) | 80'-4" |
| B15 | 8 | 10'-1 3/16"(-) | 80'-9 1/4" |

| GIRDER SPACING | | | |
|---|---|---|---|
| LOCATION | NO. OF SPACES | SPACING 2 | TOTA |
| ℄ BRG. ABUT. #1 | 3 | 17'-11 13/16" | 53'-11 |
| ℄ BENT # 2 | 3 | 17'-2 3/8" | 51'-7 |
| ℄ BENT # 3 | 3 | (3) 16'-7 1/8" | 49'-9 |
| ℄ BENT # 4 | 3 | 15'-10 3/4" | 47'-8 |
| ℄ BENT # 5 | 3 | 15'-4 1/4" | 46'-0 |
| ℄ BRG. ABUT. #6 | 3 | 14'-9 13/16" | 44'-5 |

NOTE:
GIRDER SPACING IS FOR 3 OUTSIDE BAYS ALONG ℄ BRG
ABUTMENTS AND ALONG ℄ OF BENTS.

DGN Files: P:\Projects\1672\4433-C-049W-r18_Form\Fadam
02-MAY-2005

**FOR INFORMATION ONLY**

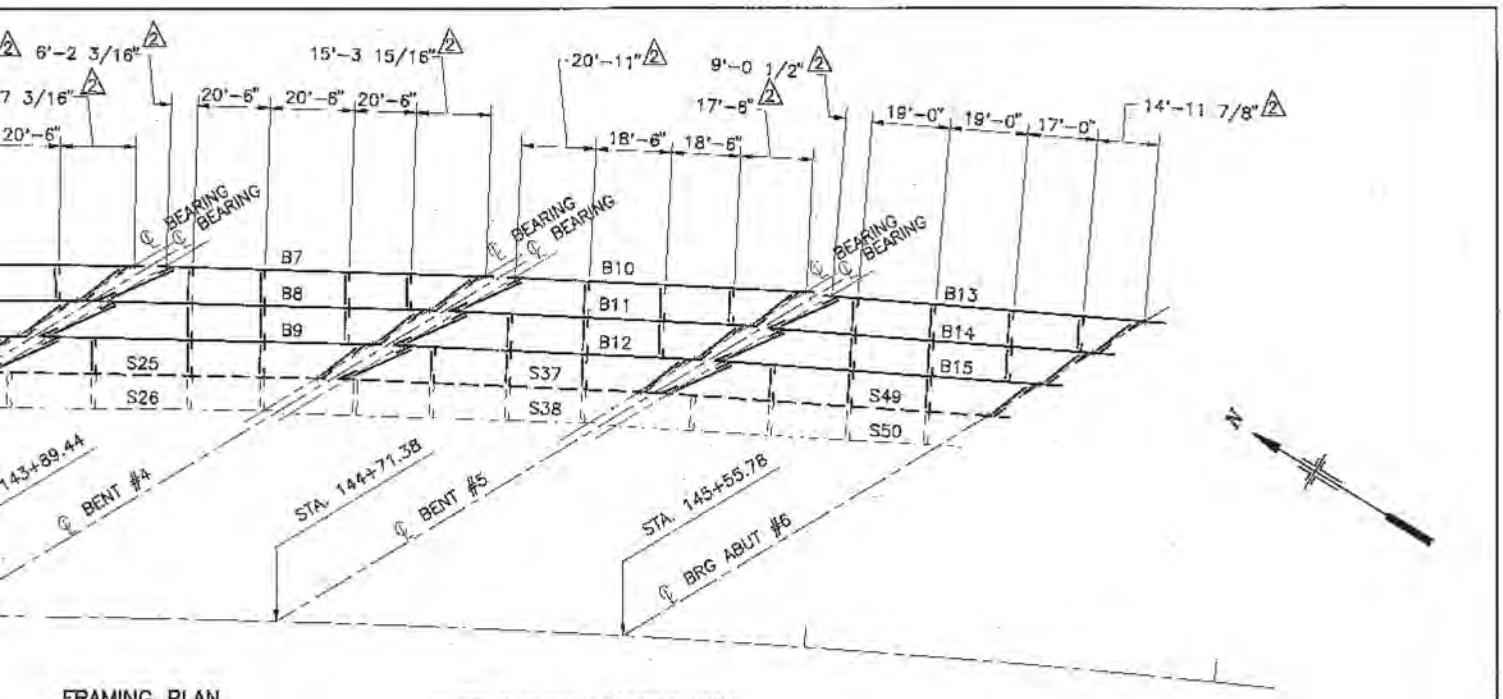


FRAMING PLAN

NOTE: DIAPHRAGM LENGTHS VARY.

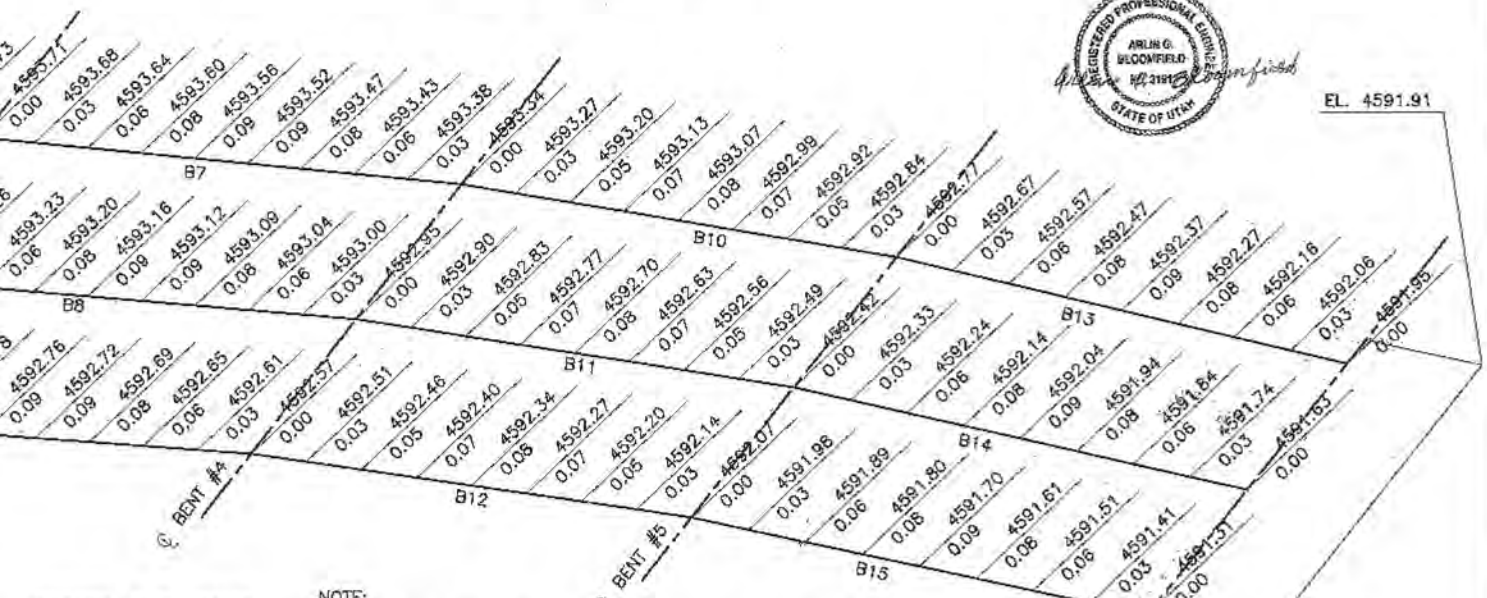


SCREED ELEVATIONS

NOTE:

1. SCREED ELEVATIONS SHOWN ARE THEORETICAL AND FOR INFORMATION ONLY. CONTRACTOR SHALL EXTEND THE WIDENED CONCRETE DECK SURFACE AT THE SAME SUPER ELEVATION AS THE EXISTING DECK AND ON THE SAME PLANE AS THE EXISTING CONCRETE DECK.
2. NUMBERS ABOVE THE LINE ARE TOP OF CONCRETE ELEVATIONS. NUMBERS BELOW THE LINE ARE DEAD LOAD DEFLECTIONS DUE TO THE DECK AND THESE NUMBERS MUST BE ADDED TO THE TOP OF CONCRETE ELEVATIONS TO OBTAIN THEORETICAL SCREED ELEVATIONS.
3. ALL ABUTMENTS AND BENTS ARE PARALLEL TO BRG. S 62° 39' 11.5" E.

| | | | |
|---|---|---|---|
| 4 | AOB | 12/92 | DIMENSIONS |
| 3 | AOB | 12/92 | DIMENSIONS |
| 2 | AOB | 11/92 | DIMENSIONS |
| 1 | BMC | 9/92 | |

REVISIONS

UTAH DEPARTMENT OF TRANSPORTATION
SALT LAKE CITY, UTAH
STRUCTURES DIVISION

LEHI MAIN STREET INTERCHANGE
I-15 N.B. WIDENING OVER US-91 & UPRR
FRAMING PLAN & SCREED DETAILS

| | | | |
|---|---|---|---|
| DESIGN AOB 8-11-91 | CHECK CF 9-92 | | |
| DRAWN BJ 8-10-91 | CHECK AOB 8-19-91 | | |
| QUANT AOB 8-22-91 | CHECK CF 9-92 | | |
| APPROVAL RECOMM. 12/9/92 | | | |
| APPROVED | | | |

143+89.44
STATION
UTAH
COUNTY
DRG. NO.
C-343W
SHT 10 OF 19

IR-15-6(107)282
PROJECT NUMBER

FILE: SSSTRGA.DWG 1:20 DRGB 12-10-92

NOTE:
SHEAR STUDS SHALL NOT BE PLACED WITHIN 2'-6" OF THE GIRDER ENDS AT BENT #2 AND BENT #4. THE SHEAR STUDS OMITTED FROM THE GIRDER ENDS SHALL BE INTERSPERSED BETWEEN ADJACENT SHEAR STUDS.

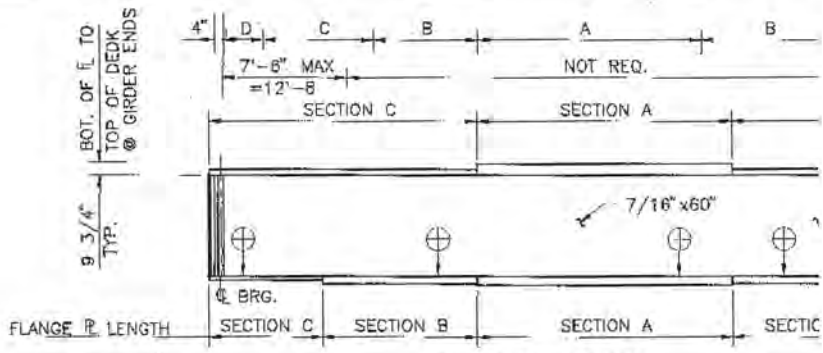


GIRDER ELEVATION
(SPAN 1,3,4,5)

| GIRDER | LENGTH C. to C. BRGS. ⚠ | LENGTH OUT to OUT ⚠ | BEARING OF GIRDER ⚠ | WEB | SECTION A TOP ℙ | SECTION A BOT. ℙ |
|---|---|---|---|---|---|---|
| B1 | 80'-8 3/8" | 82'-0 3/8" | S32°30'38.5"E | 7/16"x60" | 3/4"x10"x30'-0" | 1 1/4"x16"x30'-0" |
| B2 | 81'-4 3/8" | 82'-8 3/8" | S32°47'14.7"E | 7/16"x60" | 3/4"x10"x30'-0" | 1 1/4"x16"x30'-0" |
| B3 | 82'-0 7/16" | 83'-4 7/16" | S33°03'34.5"E | 7/16"x60" | 3/4"x10"x30'-0" | 1 1/4"x16"x30'-0" |
| B4 | 80'-7 9/16" | 81'-11 9/16" | S31°06'37.0"E | 5/8"x35" | 1 1/8"x18"x38'-0" | 2"x20"x38'-0" |
| B5 | 81'-1 7/16" | 82'-5 7/16" | S31°20'15.5"E | 5/8"x35" | 1 1/8"x18"x38'-0" | 2"x20"x38'-0" |
| B6 | 81'-7 3/8" | 82'-11 3/8" | S31°33'44.0"E | 5/8"x35" | 1 1/8"x18"x38'-0" | 2"x20"x38'-0" |
| B7 | 83'-0 1/16" | 84'-4 1/16" | S29°40'58.7"E | 7/16"x60" | 7/8"x10"x34'-0" | 1 1/2"x16"x34'-0" |
| B8 | 83'-7" | 84'-11" | S29°55'58.1"E | 7/16"x60" | 7/8"x10"x34'-0" | 1 1/2"x16"x34'-0" |
| B9 | 84'-1 15/16" | 85'-5 15/16" | S30°10'45.1"E | 7/16"x60" | 7/8"x10"x34'-0" | 1 1/2"x16"x34'-0" |
| B10 | 75'-5" | 76'-9" | S28°18'04.6"E | 7/16"x60" | 5/8"x10"x76'-9" ⚠ | 1"x16"x27'-0" |
| B11 | 75'-10 1/4" | 77'-2 1/4" | S28°31'50.4"E | 7/16"x60" | 5/8"x10"x77'-2 1/4" ⚠ | 1"x16"x27'-0" |
| B12 | 76'-3 9/16" | 77'-7 9/16" | S28°45'26.6"E | 7/16"x60" | 5/8"x10"x77'-7 9/16" ⚠ | 1"x16"x27'-0" |
| B13 | 79'-0 3/8" | 80'-4 3/8" | S26°57'42.7"E | 7/16"x60" | 5/8"x10"x80'-4 3/8" ⚠ | 1 1/4"x16"x28'-0" |
| B14 | 79'-5 5/8" | 80'-9 5/8" | S27°10'52.7"E | 7/16"x60" | 5/8"x10"x80'-9 5/8" ⚠ | 1 1/4"x16"x28'-0" |
| B15 | 79'-10 7/8" | 81'-2 7/8" | S27°23'54.1"E | 7/16"x60" | 5/8"x10"x81'-2 7/8" | 1 1/4"x16"x28'-0" |

| STUD SPACING A | STUD SPACING B | STUD SPACING C | STUD SPACING D ⚠ | ℄ BEARING to END OF BEAM | CAM 0.1 X SPAN | CAM 0.2 X SPAN | CAM 0 S |
|---|---|---|---|---|---|---|---|
| 18@16"=24'-0" | 14@14"=16'-4" | 10@13"=10'-10" | 2@7 1/8"(-)=1'-2 3/16" | 8" | 1/2 | 15/16 | 1 |
| 18@16"=24'-0" | 14@14"=16'-4" | 11@13"=11'-11" | 1@5 3/16"=5 3/16" | 8" | 1/2 | 15/16 | 1 |
| 18@16"=24'-0" | 14@14"=16'-4" | 11@13"=11'-11" | 1@9 1/4"=9 1/4" | 8" | 1/2 | 15/16 | 1 |
| 34@11"=31'-2" | 28@10"=23'-4" | ------- | 2@8 3/8"(+)=1'-4 13/16" | 8" | 13/16 | 1 1/2 | |
| 34@11"=31'-2" | 29@10"=24'-2" | ------- | 1@9 3/4"=9 3/4" | 8" | 13/16 | 1 1/2 | |
| 34@11"=31'-2" | 29@10"=24'-2" | ------- | 2@8 3/8"(-)=1'-0 11/16" | 8" | 13/16 | 1 1/2 | |
| 18@16"=24'-0" | 14@14"=16'-4" | 11@13"=11'-11" | 2@7 1/2"=1'-3" | 8" | 9/16 | 1 | 1 |
| 18@16"=24'-0" | 14@14"=16'-4" | 12@13"=13'-0" | 1@5 1/2"=5 1/2" | 8" | 9/16 | 1 | 1 |
| 18@16"=24'-0" | 14@14"=16'-4" | 12@13"=13'-0" | 1@9"=9" | 8" | 9/16 | 1 | 1 |
| 30@15"=37'-6" | 10@14"=11'-8" | 6@13"=6'-6" | 1@9 1/2"=9 1/2" | 8" | 7/16 | 3/4 | 1 |
| 30@15"=37'-6" | 10@14"=11'-8" | 6@13"=6'-6" | 1@12 1/8"=1'-0 1/8" | 8" | 7/16 | 3/4 | 1 |
| 30@15"=37'-6" | 10@14"=11'-8" | 6@13"=6'-6" | 2@7 3/8(+)"=1'-2 13/16" | 8" | 7/16 | 3/4 | 1 |
| 6@16"=21'-4" | 13@14"=15'-2" | 12@13"=13'-0" | 1@8 3/16"=8 3/16" | 8" | 7/16 | 7/8 | 1 |
| 6@16"=21'-4" | 13@14"=15'-2" | 12@13"=13'-0" | 1@10 13/16"=10 13/16" | 8" | 7/16 | 7/8 | 1 |
| 6@16"=21'-4" | 13@14"=15'-2" | 12@13"=13'-0" | 1@13 7/16"=1'-1 7/16" | 8" | 7/16 | 7/8 | 1 |

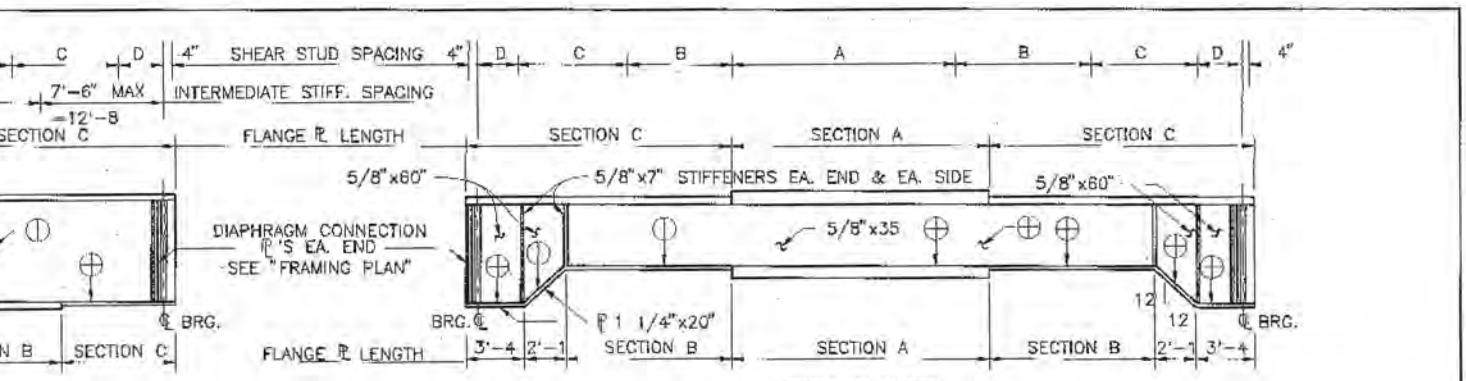


GIRDER ELEVATION
(SPAN 2)

| SECTION B | | SECTION C | | STIFFENER SPACING |
|---|---|---|---|---|
| TOP ℙ | BOT. ℙ | TOP ℙ ⚠ | BOT. ℙ ⚠ | |
| ------ | 1"x16"x10'-8" | 5/8"x10"x26'-0 3/16" | 3/4"x16"x15'-6 3/16" | 2 SPA @ 7'-6" MAX = 12'-8" MAX |
| ------ | 1"x16"x10'-6" | 5/8"x10"x26'-4 3/16" | 3/4"x16"x15'-10 3/16" | 2 SPA @ 7'-6" MAX = 12'-8" MAX |
| ------ | 1"x16"x10'-6" | 5/8"x10"x26'-8 1/4" | 3/4"x16"x16'-2 1/4" | 2 SPA @ 7'-6" MAX = 12'-8" MAX |
| ------ | 1 1/2"x20"x16'-6 13/16" ⚠ | 7/8"x18"x21'-11 13/16" | SEE GIRDER DETAIL | NOT REQ. |
| ------ | 1 1/2"x20"x16'-9 3/4" ⚠ | 7/8"x18"x22'-2 3/4" | SEE GIRDER DETAIL | NOT REQ. |
| ------ | 1 1/2"x20"x17'-0 11/16" ⚠ | 7/8"x18"x22'-5 11/16" | SEE GIRDER DETAIL | NOT REQ. |
| ------ | 1"x16"x10'-0" | 5/8"x10"x25'-2 1/16" | 3/4"x16"x15'-2 1/16" | 2 SPA @ 7'-6" MAX = 12'-8" MAX |
| ------ | 1"x16"x10'-0" | 5/8"x10"x25'-5 1/2" | 3/4"x16"x15'-5 1/2" | 2 SPA @ 7'-6" MAX = 12'-8" MAX |
| ------ | 1"x16"x10'-0" | 5/8"x10"x25'-9" | 3/4"x16"x15'-9" | 2 SPA @ 7'-6" MAX = 12'-8" MAX |
| ------ | ------ | ------ | 3/4"x16"x24'-10 1/2" | 2 SPA @ 7'-6" MAX = 12'-8" MAX |
| ------ | ------ | ------ | 3/4"x16"x25'-1 1/8" | 2 SPA @ 7'-6" MAX = 12'-8" MAX |
| ------ | ------ | ------ | 3/4"x16"x25'-3 13/16" | 2 SPA @ 7'-6" MAX = 12'-8" MAX |
| ------ | 1"x16"x10'-6" | ------ | 3/4"x16"x15'-8 3/16" | 2 SPA @ 7'-6" MAX = 12'-8" MAX |
| ------ | 1"x16"x10'-6" | ------ | 3/4"x16"x15'-10 13/16" | 2 SPA @ 7'-6" MAX = 12'-8" MAX |
| ------ | 1"x16"x10'-6" | ------ | 3/4"x16"x16'-1 7/16" | 2 SPA @ 7'-6" MAX = 12'-8" MAX |

| BER (IN) | | | GIRDER |
|---|---|---|---|
| 3 X PAN | 0.4 X SPAN | 0.5 X SPAN | |
| 5/16 | 1 1/2 | 1 9/16 | B1 |
| 5/16 | 1 1/2 | 1 9/16 | B2 |
| 5/16 | 1 1/2 | 1 9/16 | B3 |
| 2 | 2 3/8 | 2 7/16 | B4 |
| 2 | 2 3/8 | 2 7/16 | B5 |
| 2 | 2 3/8 | 2 7/16 | B6 |
| 3/8 | 1 5/8 | 1 11/16 | B7 |
| 3/8 | 1 5/8 | 1 11/16 | B8 |
| 3/8 | 1 5/8 | 1 11/16 | B9 |
| /16 | 1 1/4 | 1 5/16 | B10 |
| /16 | 1 1/4 | 1 5/16 | B11 |
| /16 | 1 1/4 | 1 5/16 | B12 |
| /16 | 1 3/8 | 1 7/16 | B13 |
| /16 | 1 3/8 | 1 7/16 | B14 |
| /16 | 1 3/8 | 1 7/16 | B15 |

## GENERAL STEEL NOTES

1. ALL STRUCTURAL STEEL SHALL BE AASHTO M270 GRADE 36.
2. BEARING STIFFENERS AT ABUTMENTS ARE 1– ℙ 5/8" x 7" ON EACH SIDE OF WEB. DIAPHRAGM CONNECTION PLATES AT GIRDER ENDS ARE 3/8" x 9". SEE "FRAMING PLAN."
3. INTERMEDIATE DIAPHRAGM STIFFENERS ARE 1– ℙ 3/8" x 6 ON EACH SIDE OF WEB ON INTERIOR GIRDERS AND ON INSIDE FACE ONLY OF EXTERIOR GIRDERS, SEE "FRAMING PLAN."
4. CHARPY V–NOTCH TOUGHNESS TEST SHALL BE PERFORMED ON ALL WEB & SPLICE PLATES. OTHER TENSILE MAIN LOAD CARRYING MEMBERS TO BE TESTED SHALL BE INDICATED BY ⊕ (SERVICE TEMPERATURE ZONE–2)
5. FOR WELDING DETAILS, WELDING SPECIFICATIONS AND GIRDER DETAILS, SEE "STEEL DETAILS."
6. FOR DIAPHRAGMS & SHEAR CONNECTORS, SEE "STEEL DETAILS."
7. INTERMEDIATE STIFFENERS ARE 1– ℙ 3/8" X 4 1/2". PLACE INTERMEDIATE STIFFENERS ON INSIDE FACE ONLY OF EXTERIOR GIRDER ONLY, SEE "FRAMING PLAN."
8. ALL DIMENSIONS SHOWN ARE HORIZONTAL, LENGTHS IN FABRICATION SHALL TAKE VERTICAL GRADE INTO ACCOUNT.

| NO | BY | DATE | REVISION |
|---|---|---|---|
| ⚠ | ADB | 11/92 | DIMENSIONS |

REVISIONS

FOR INFORMATION ONLY

REGISTERED PROFESSIONAL ENGINEER ARLIN C. BLOOMFIELD No. 3181 STATE OF UTAH

UTAH DEPARTMENT OF TRANSPORTATION
SALT LAKE CITY, UTAH
STRUCTURES DIVISION

LEHI MAIN STREET INTERCHANGE
I–15 N.B. WIDENING OVER US–91 & UPRR
GIRDER DETAILS

| | | | |
|---|---|---|---|
| DESIGN ADB 6-3-91 | CHECK CF 9-92 | | |
| DRAWN BJ 7-29-91 | CHECK ADB 8-12-91 | 143+89.44 | |
| QUALITY ADB 8-22-91 | CHECK CF 9-92 | | |
| APPROVING ENGINEER 9/1/92 DATE | DIRECTOR, ENGINEER | UTAH | |
| APPROVED DATE | CHIEF STRUCTURAL ENGR. | DRG. NO. C-343W | |
| IR-15-6(107)282 PROJECT NUMBER | | SHT 11 OF 18 | |

FILE: SSSTR10.DWG 1=1 DRDB 11-23-92

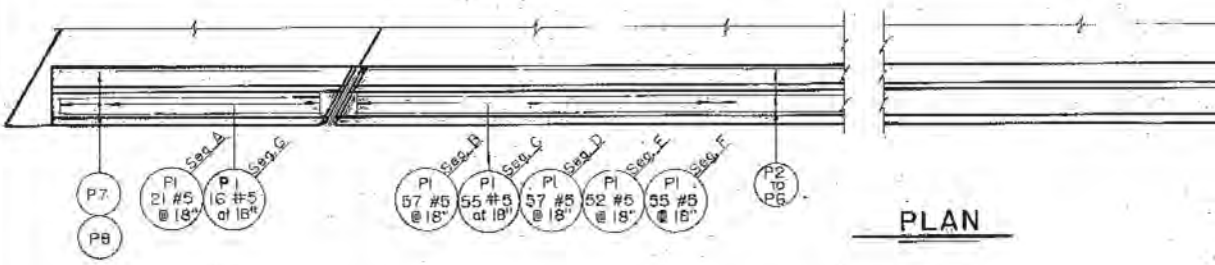


PLAN

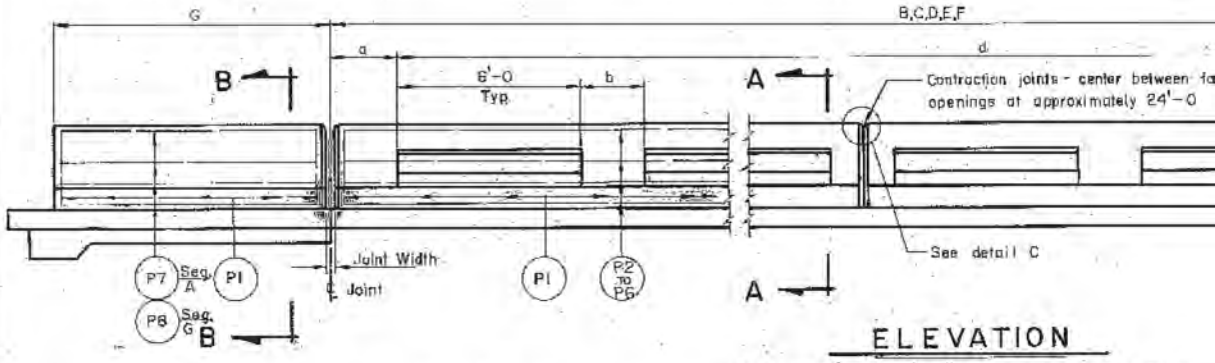


ELEVATION

(ALL DIMENSIONS SHOWN ARE ALONG EDGE OF DECK)

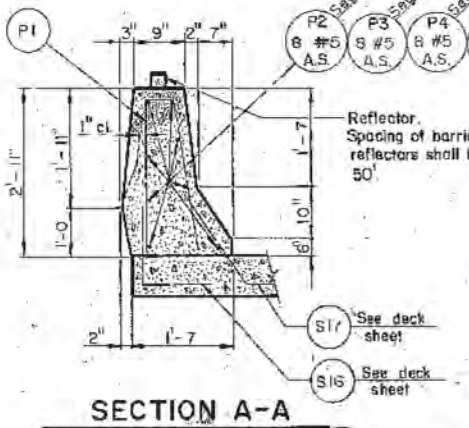


SECTION A-A

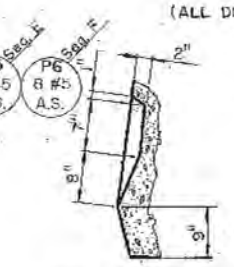


FALSE OPENING

(PARTIAL SECTION)

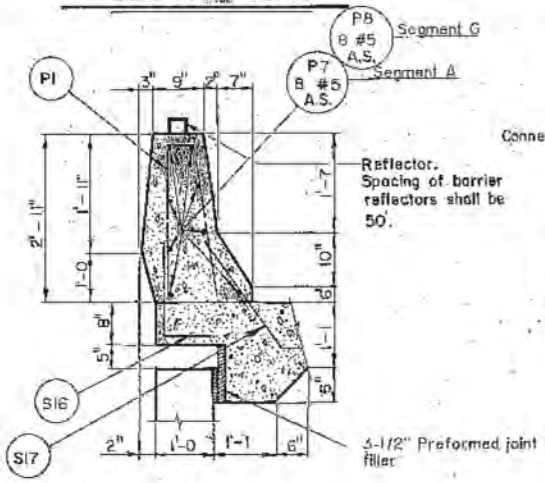


SECTION B-B

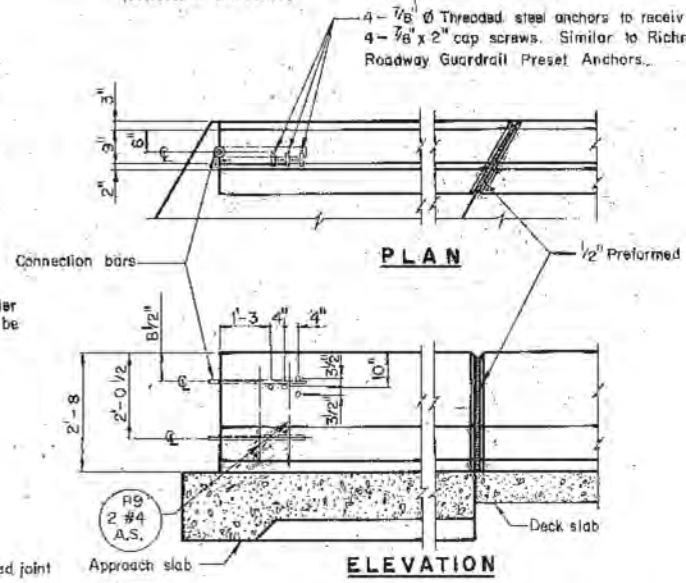


PARAPET END DETAILS

**FOR INFORMATION ONLY**

02-MAY-2005 DGN Files IP PWPdms\1672\4433.C-049W-16_Parapfoldn

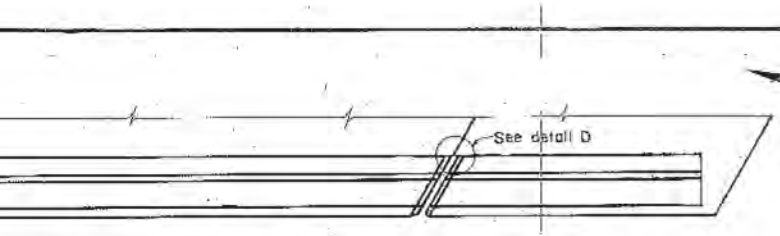


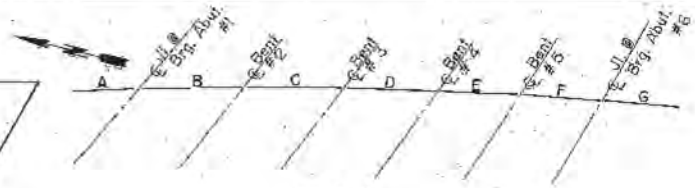


KEY PLAN

| SCHEDULE | | | | |
|---|---|---|---|---|
| | LENGTH | a | b | c | d |
| A | 50'-2 1/8" | — | — | — | — |
| B | 83'-11 7/8" | 2'-2 5/8" | 2'-2" | 2'-2 5/16" | 79'-6" |
| C | 82'-3 1/2" | 2'-1 3/4" | 2'-0" | 2'-1 3/8" | 78'-0" |
| D | 84'-7 5/16" | 2'-2 1/8" | 2'-3" | 2'-2 1/8" | 80'-3" |
| E | 76'-11 9/16" | 2'-2" | 2'-4" | 2'-2" | 72'-8" |
| F | 91'-9 9/16" | 1'-10 13/16" | 2'-0" | 1'-10 13/16" | 79'-0" |
| G | 22'-10 1/4" | — | — | — | — |

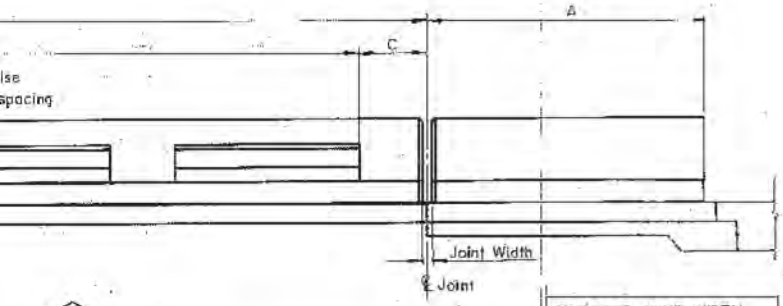


| PARAPET JOINT WIDTH | |
|---|---|
| Location | Width |
| ℄ Brg. Abut. #1 | 1/2" |
| ℄ Bent #2 | Match Exist. Deck Jt. Width |
| ℄ Bent #3 | 1/2" |
| ℄ Bent #4 | Match Exist. Deck Jt. Width |
| ℄ Bent #5 | 1/2" |
| ℄ Brg. Abut. #6 | 1/2" |

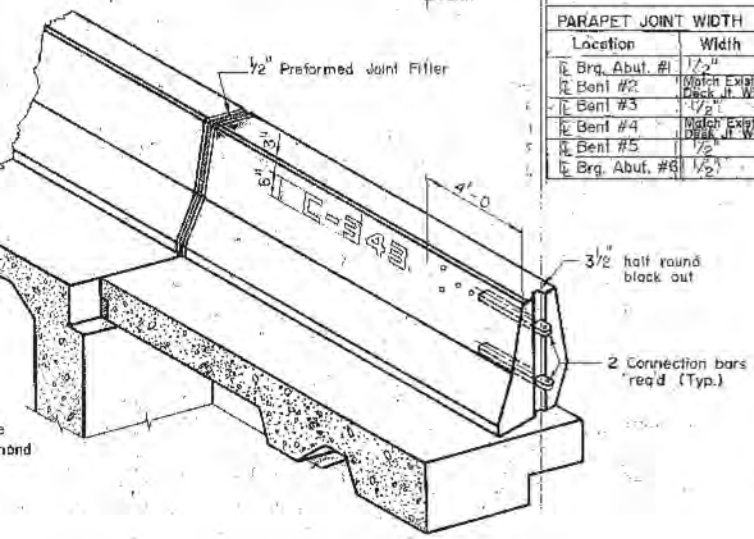


ISOMETRIC

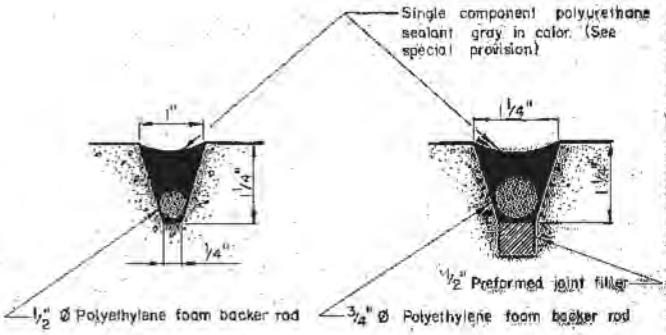


DETAIL C

DETAIL D

## GENERAL NOTES

1. All reinforcing steel splices shall be alternated.
2. Cover to reinforcing steel shall be 1 1/2" min. unless noted otherwise.
3. **All reinforcing steel shall be epoxy coated.**
4. Rigid plastic foam shall be used to form parapet joints at ℄ Bent #2 & ℄ Barrier #4.
5. Drawing number to be located on right-hand side of approach parapet.
6. Place contraction joint on sides and top of parapet.
7. Sealant and foam backer rod shall extend from deck to top of parapet on the inside parapet face, and across top of parapet.
8. **Barriers/factors shall conform to Standard Drawing No. T-6-1.**

TYPICAL SECTION

THRU DRWG. NUMBER

REGISTERED PROFESSIONAL ENGINEER
BRUNO O. BLOMFIELD
No. 2151
STATE OF UTAH

Concrete Quantities for all parapets
61.00 Cu. Yds Class AA (AE)

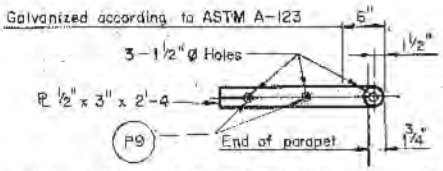


Steel to be ASTM A-36 or ASTM A-575 Grade 1020

CONNECTION BAR DETAIL

| NO. | BY | DATE | REMARKS |
|---|---|---|---|
| 1 | AOB | 12/2/92 | DIMENSION |

REVISIONS

UTAH DEPARTMENT OF TRANSPORTATION
SALT LAKE CITY, UTAH
STRUCTURES DIVISION

LEHI MAIN STREET INTERCHANGE
I-15 NB WIDENING OVER MAIN STREET
PARAPET DETAILS

| | | | |
|---|---|---|---|
| DESIGN A.O.B. | 6-92 | CHECK | 6-92 |
| DRAWN B.D.H. | 6-92 | CHECK | 6-92 |
| QUANT. | | CHECK | 6-92 |
| APPROVAL RECOMM. | DATE | DESIGN ENGINEER | |
| APPROVED | DATE | DIRECT. ENGINEER | |

143+89.44 STATION
UTAH COUNTY
PROJ. NO. C-343 W
IR-15-6 (107) 282 PROJECT NUMBER
SHT. 16 OF 19

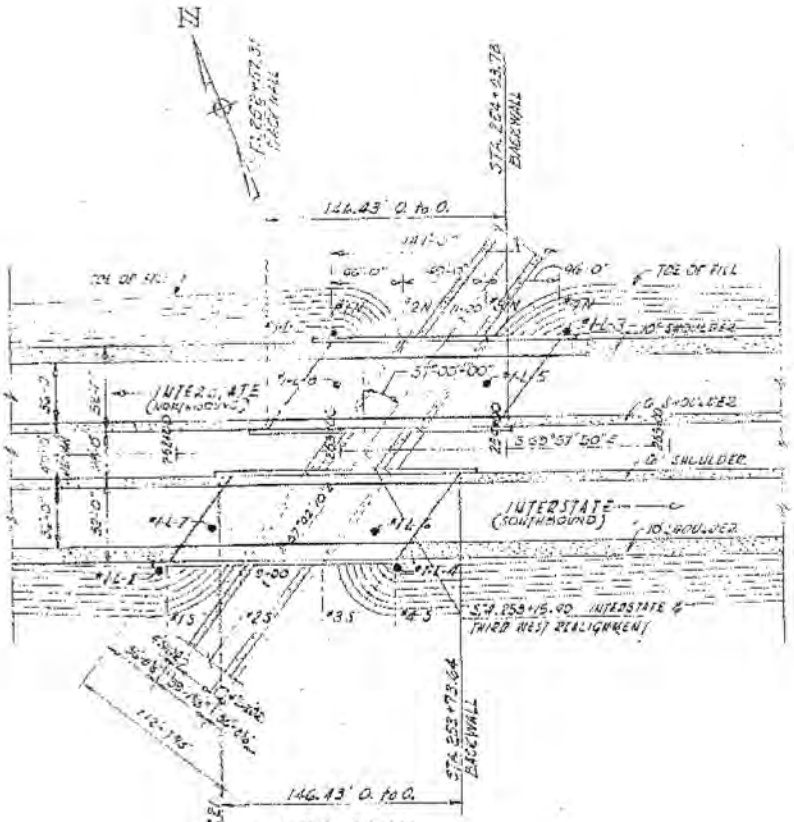


"KEY" PLAN
SCALE: 1" = 50'-0"

TWO STRUCTURES

| ESTIMATE OF QUANTITIES | | | AS CONSTR. |
|---|---|---|---|
| NO. | ITEM | QUANTITY | |
| | EXCAV. FOR STRUCTURES UNCLASS. | 415 C.Y. | 1109.4 |
| | CONCRETE CLASS "A"(AE) | 1,275 C.Y. | 1281.06 |
| | REINFORCING STEEL | 204,789 LBS. | 204,789 |
| △ | STRUCTURAL STEEL | 320,648 LBS. | 333,471 |
| | 6" PERFORATED C.M.P. UNDERDR'N | 470 L.F. | 495 |
| | ALUM. HANDRAIL (SINGLE RAIL) | 650 L.F. | 692 |
| | 3" RIGID STEEL CONDUIT | 357 L.F. | 359 |

DESIGN SPECIFICATIONS: [illegible]
CONSTRUCTION SPECIFICA[illegible] accordance with the Sta[illegible] Construction, 1960 Edition [illegible] at request for bids.

LIVE LOAD: 4-20 - S16 - 9[illegible] Specifications of 1957.

REINFORCEMENT: All rein[illegible] conforming to A.S.T.M. desig[illegible] designation A-305.

ALLOWABLE STRESSES: [illegible] cent in place concrete [illegible] - 3000 P.S.I.

CONCRETE: Class A(AE) [illegible]

CHAMFERS: Exposed conc[illegible] and 1/2" fillets unless o[illegible] have 3/4" chamfers & 3/4" joint filler, beveled 3/4" [illegible]

FOUNDATIONS: Foundatio[illegible] in construction.

SHOP DRAWINGS: All sho[illegible]

DATUM: All elevations [illegible]

STRUCTURAL STEEL: [illegible] A.S.T.M. Designation A-[illegible]

BENCH MARK:

NOTE:
Scales shown apply to fu[illegible]

**FOR INFORMATION ONLY**

DGN Files IP_PWBridge\16721\4433_C-045-81_Foundation
02-MAY-2005

| FED. ROAD DIST. NO. | STATE | FED. AID PROJ. NO. | TYPICAL YEAR | SHEET NO. | TOTAL SHEETS |
|---|---|---|---|---|---|
| 11 | UTAH | | POST WPA | 10 | |

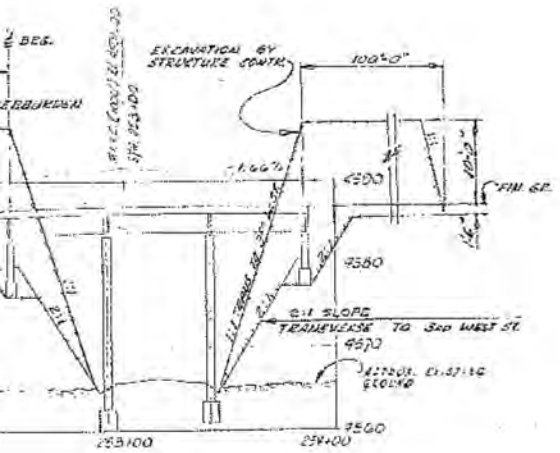


NTERSTATE PROFILE
CALE: HORIZ. 1" = 40'-0"
VERT. 1" = 10'-0"

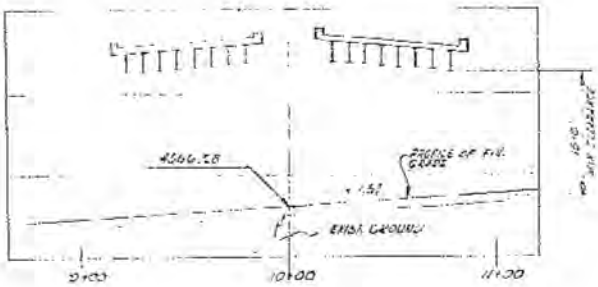


REALIGNMENT PROFILE
SCALE: HORIZ. 1" = 40'-0"
VERT. 1" = 10'-0"

## GENERAL NOTES

A.A.S.H.O., Standard Specifications for Highway Bridges, 1961 Edition
TIONS: Materials, construction and workmanship shall be in
e Standard Specifications for Road and Bridge
and Supplements thereto which are in effect at the date

d Interstate Alternate Loading in accordance with the A.A.S.H.O.

forcing steel bars shall be new billet steel, intermediate grade,
nation A-15 and shall have deformations conforming to A.S.T.M.

Structural Steel - 18,000 P.S.I., reinforcing Steel 20,000 P.S.I.
in compression 1,200 P.S.I. f'c - Ultimate compression strength

ate with Type II Low Alkali cement shall be used throughout.

ate of substructure will have 1½" chamfers
therwise noted. Edges of concrete deck and sidewalk shall
fillets unless otherwise noted. Corners at open joints and
r rounded.

s may be altered if necessary to suit conditions encountered

n drawings shall be approved before fabrication of steel.

refer to U.S.C. and G.S. Mean Sea Level Datum of 1929.

nless otherwise noted, structural steel shall conform to
.

l size original drawings only.

| INDEX OF SHEETS | |
|---|---|
| SHEET NUMBER | DESCRIPTION |
| 1 | KEY PLAN & INDEX SHEET |
| 2 | DECK PLAN & ELEVATION |
| 3 & 4 | BORING LOGS |
| 5 | FOUNDATION PLAN |
| 6 & 7 | ABUTMENTS NO'S. 1-N, 1-S, 4-N & 4-S |
| 8 | BENTS NO'S. 2-N, 2-S, 3-N & 3-S |
| 9 | FRAMING PLAN |
| 10 | TRANSVERSE SECTION |
| 11 | DETAILS |
| ST-1 | RAILING DETAILS |
| 12, 13, & 14 | REINFORCING SCHEDULE |
| ST-5 | LIGHTING DETAILS |

## KEY PLAN & INDEX SHEET

SHEET 1 OF 14 SHEETS

| NO. | BY | DATE | DESCRIPTION |
|---|---|---|---|
| A | R B | 6-24-63 | CHG. OFF. OF STR. STL. TO INCL. CORC'D. |

REVISIONS

DESIGN AND DRAWING BY
WESTERN ENGINEERS, INC. AND
EDWARDS AND KELCEY
CONSULTING ENGINEERS

REGISTERED PROFESSIONAL ENGINEER NO. 2164 R. R. NEWVILLE STATE OF UTAH

SUBMITTED BY R. R. Newville CHIEF ENGINEER
UTAH ENGR. LIC. NO. 2164

UTAH STATE ROAD COMMISSION
SALT LAKE CITY, UTAH
BRIDGE DEPARTMENT

AMERICAN FORK 3RD WEST OVERPASS
146'-5½" O. TO O. 127° XING ∠
STA. 253+15.493
LEHI-PROVO
UTAH COUNTY

DESIGNED BY B.R.B. DATE
DRAWN BY R.H.S. ISSUED May 22, 1961
CHECKED BY B.R. APPROVED R. R. Newville CHIEF BRIDGE ENGINEER

DR. NO. DWG. NO. C-345

STRUCTURE 1-L

FINAL 11-13-63

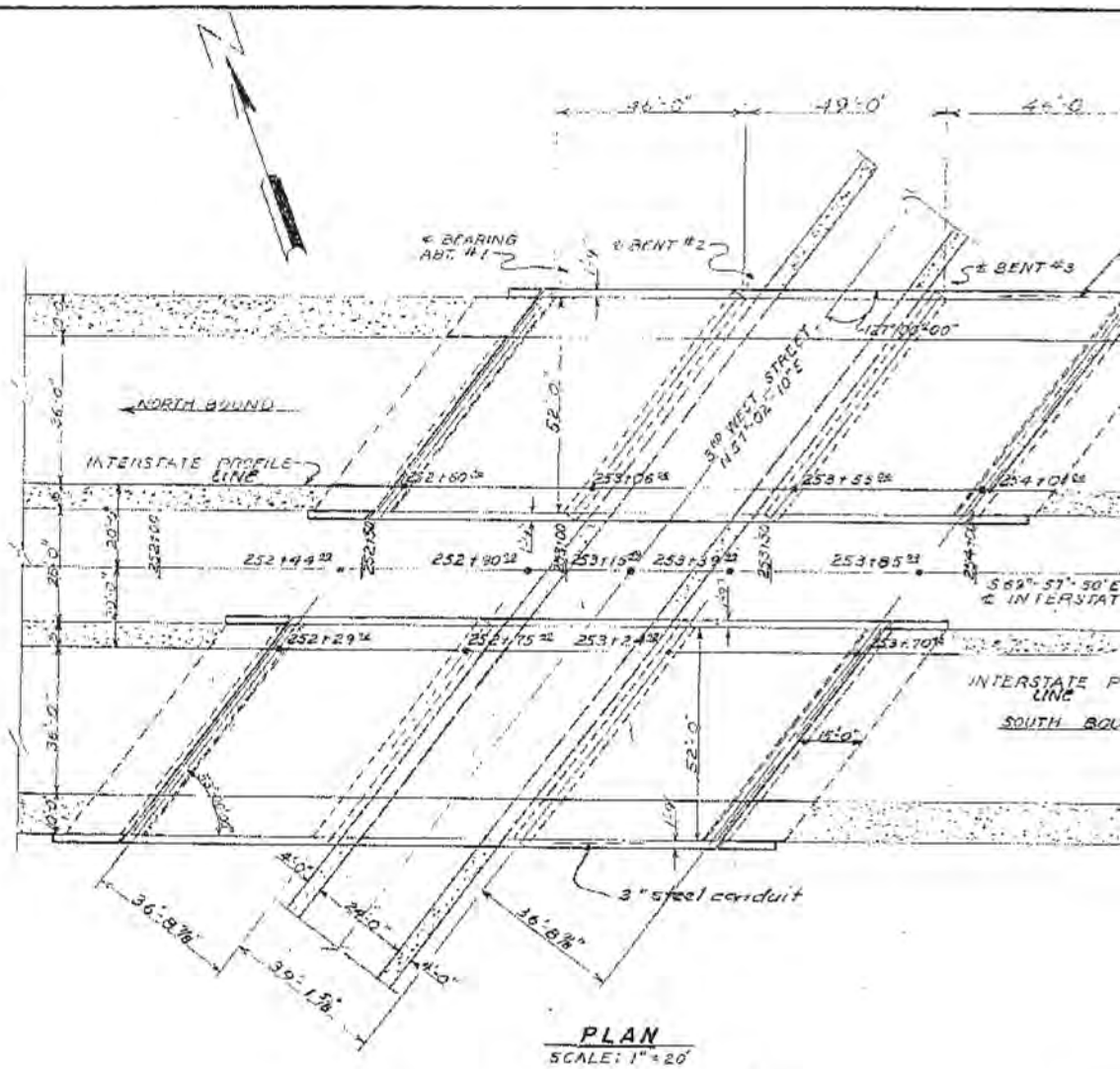


PLAN
SCALE: 1" = 20'

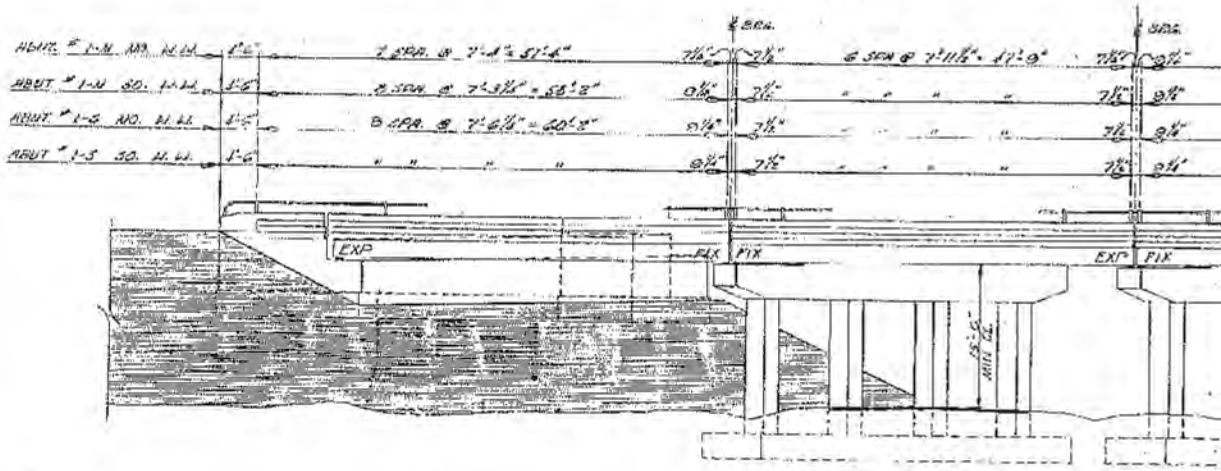


HANDRAIL SPACING

**FOR INFORMATION ONLY**

[redacted]

| FED. ROAD DIST. NO. | STATE | FED. AID PROJ. NO. | FISCAL YEAR | SHEET NO. | TOTAL SHEETS |
|---|---|---|---|---|---|
| U.T. | UTAH | | POST WAR | | |

11

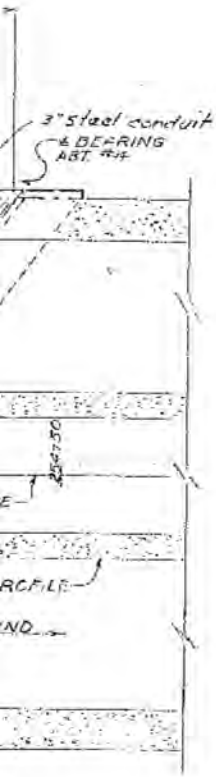


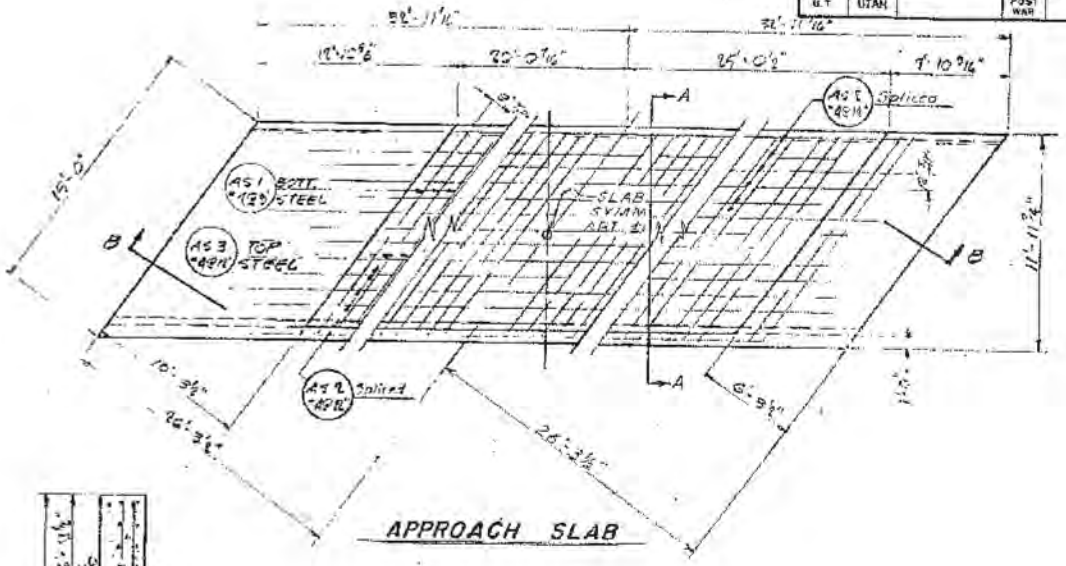


APPROACH SLAB

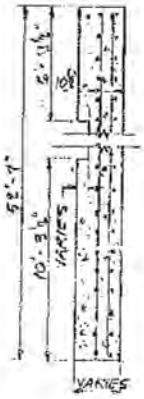


SECTION B-B

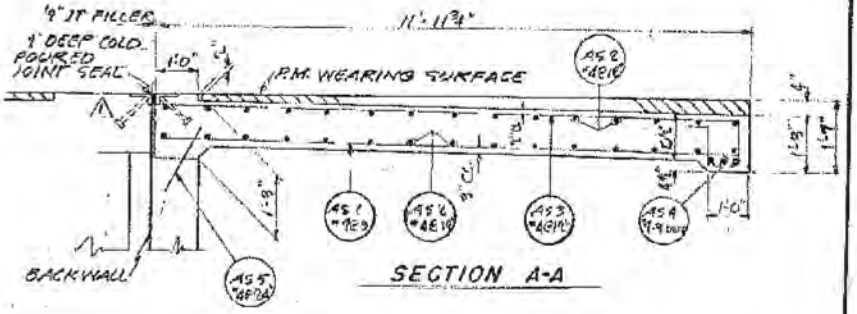


SECTION A-A

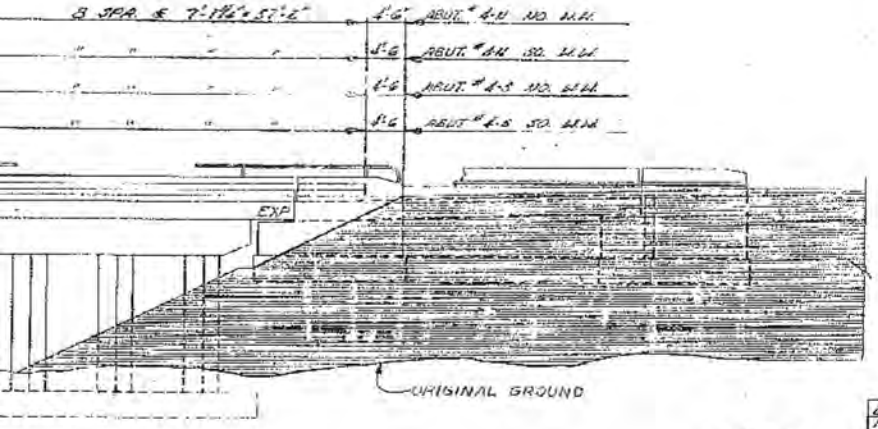


NOTE:
1. FOR RAILING DETAILS SEE DRWG. ST-1
2. POINTS ON RAILING MARKED "NOT BOLTED" IN ELEVATION VIEW INDICATE THAT ONE END OF THE RAIL IS TO BE LEFT LOOSE IN THE POST TO PROVIDE MOVEMENT FOR EXPANSION OR CONTRACTION.

PLAN & ELEVATION

SHEET 2 OF 14 SHEETS

| NO. | BY | DATE | DESCRIPTION |
|---|---|---|---|
| 1 | RJB | 6-25-61 | SHOW GUARD EX. ON DECK JOINTS |

REVISIONS

DESIGN AND DRAWING BY
WESTERN ENGINEERS, INC. AND
EDWARDS AND KELCEY
CONSULTING ENGINEERS

SUBMITTED BY: [signature] CHIEF ENGINEER
UTAH ENGR. LIC. NO. 2164

REGISTERED PROFESSIONAL ENGINEER NO. 2164 F. R. NEWVILLE STATE OF UTAH

UTAH STATE ROAD COMMISSION
SALT LAKE CITY, UTAH
BRIDGE DEPARTMENT

AMERICAN FORK 3RD WEST OVERPASS
146'-5 1/8" Q TO Q. 127° XING ℄
STA. 253 +15.495 1-15-6 (3) 271 (13)
LEHI-PROVO / UTAH COUNTY

DESIGNED BY BK & BT
DRAWN BY SW
TRACED BY RW
CHECKED BY BK & BT
NAME AS SHOWN
ISSUED May 22, 1961
APPROVED D. L. Sargent CHIEF BRIDGE ENGINEER

BR. No.
DWG. No. C-345

STRUCTURE, 1-L

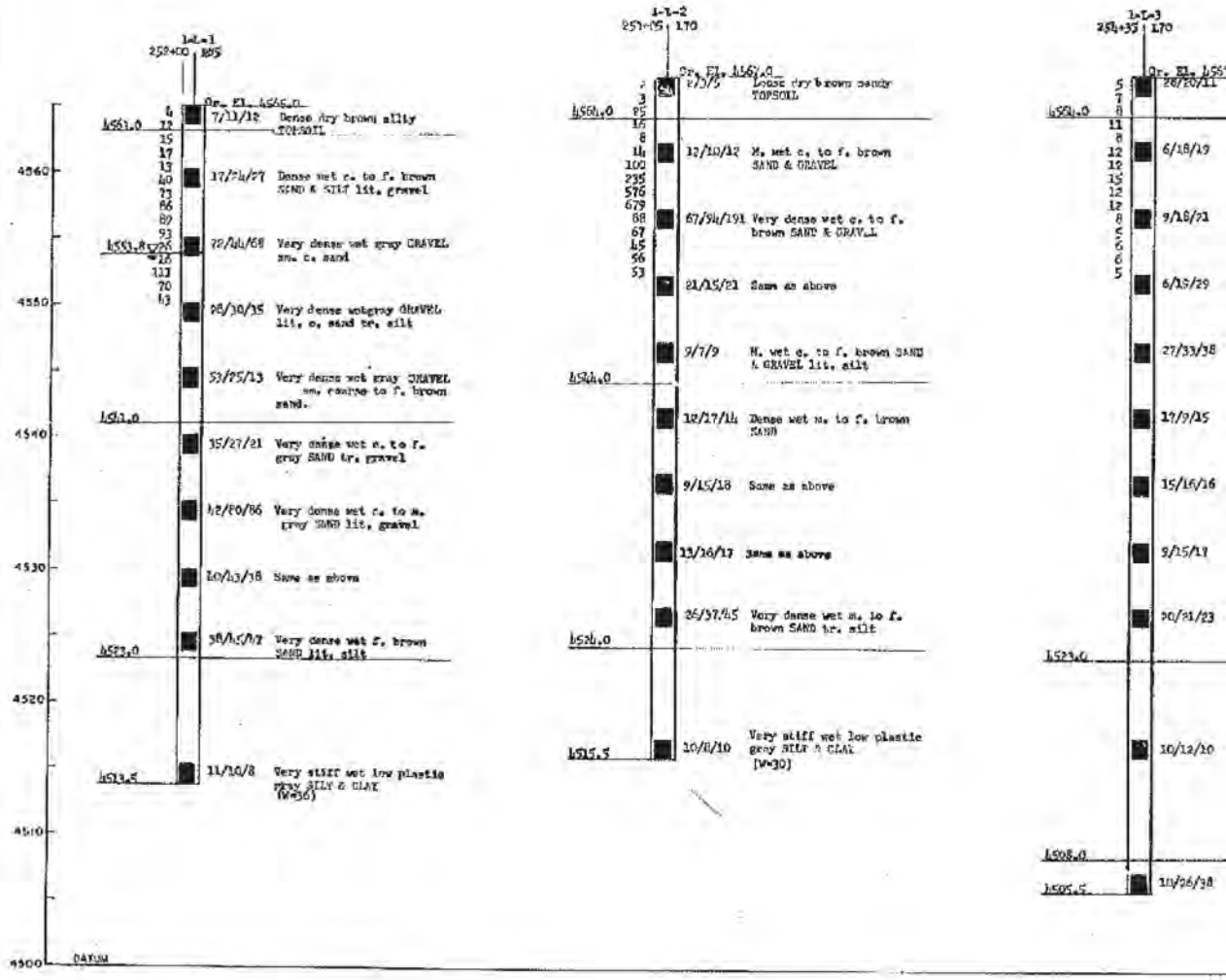


**FOR INFORMATION ONLY**

DGN Files: P:\Projects\1672\4431\C-045-03.FormGeotech

02-MAY-2005

| FED. ROAD DIST. NO. | STATE | FED. AID PROJ. NO. | FISCAL YEAR | SHEET NO. | TOTAL SHEETS |
|---|---|---|---|---|---|
| 4.7 | UTAH | | FOR LIAN | | 12 |

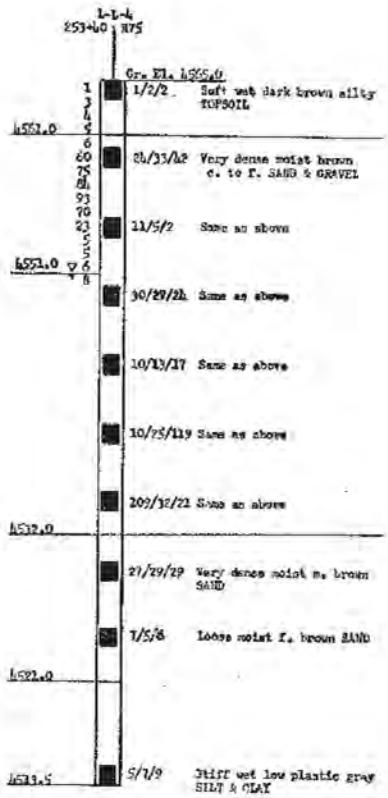


.0
Dense dry brown sandy TOPSOIL

Dense moist c. to f. BROWN SAND AND GRAVEL

Dense wet f. brown SAND some silt tr. gravel

Dense wet c. to f. brown SAND & GRAVEL tr. silt

Very dense wet brown GRAVEL some c. to f. sand

M. wet f. brown SAND

Dense wet f. brown SAND tr. silt

Dense wet f. brown SAND lit. silt

Dense wet f. brown SAND some silt

Very stiff wet dark gray low plastic SILT & CLAY (W=33)

Very dense wet f. dark gray SAND sm. silt

## LEGEND

Boring No. → 1-4-1

Interstate Station → 22+63 N72 → Offset

Ground Elevation → Gr. El. 4562

Ground Water Table Elevation 4557.2

Number of Blows Used to drive casing 12 inches with 300 lb. hammer falling 2 ft. (Typical)

Strata Change Elevation (Typical) → 4560

Boring Advanced Without Casing

Location of Sample (Typical) → 4539

Bottom of Boring Elevation 4535.5

Number of Blows Used to drive 1-3/8" I.D. sampler with 140 lb. hammer falling 30 inches — 1st. 6 inches, 2nd. 6 inches, 3rd. 6 inches

2/4/5 Stiff m. plastic brown clay some silt-TOPSOIL

11/13/17 M. dense wet tan m. to c. SAND, some silt, tr. f. gravel

15/21/30 Dense wet tan m. to c. SAND, some gravel

7/4/8 Stiff, low plastic brown CLAY & SILT, tr. f. sand (LL = 40, PL = 20, W = 32)

11/10/12 Very stiff, plastic gray CLAY & SILT, tr. f. sand (W = 35, qu = 1.5/tsf)

9/12/20 Very stiff varved plastic gray silty CLAY & f. silty SAND

Visual soil description for each sample and results of classification tests, if any (Typical)

ABBREVIATIONS IF AND WHEN USED:

br. = brown
gr. = gray
org. = organic
f. = fine
v. f. = very fine
m. = medium
c. = coarse
sm. = some
tr. = trace
lit. = little
LL = Liquid Limit in %
PL = Plastic Limit in %
W = Natural Moisture Content in %
qu = Unconfined compression test from pocket penetrometer in T/ft.²

# BORING LOGS

SHEET 3 OF 12 SHEETS

UTAH STATE ROAD COMMISSION
SALT LAKE CITY, UTAH
BRIDGE DEPARTMENT

AMERICAN FORK 3RD WEST OVERPASS
146'-5½" O. TO O. 127° XING ∠
STA. 253+15.493 I-15-6 POINTS
LEHI-PROVO UTAH COUNTY

DESIGNED BY E.E.K. SCALE AS SHOWN
DRAWN BY E.E.K. DATE Nov. 22, 1961
TRACED BY E.E.K. APPROVED R.L. Sargent
CHECKED BY E.E.K. / J.R.N. LAST REVISED

NO. DWG. NO. C-345

DESIGN AND DRAWING BY
WESTERN ENGINEERS, INC. AND
EDWARDS AND KELCEY
CONSULTING ENGINEERS

SUBMITTED BY J. R. Newville CHIEF ENGINEER
UTAH ENGR. LIC. NO. 2164

REGISTERED PROFESSIONAL ENGINEER NO. 2164 J. R. NEWVILLE STATE OF UTAH

STRUCTURE I-L

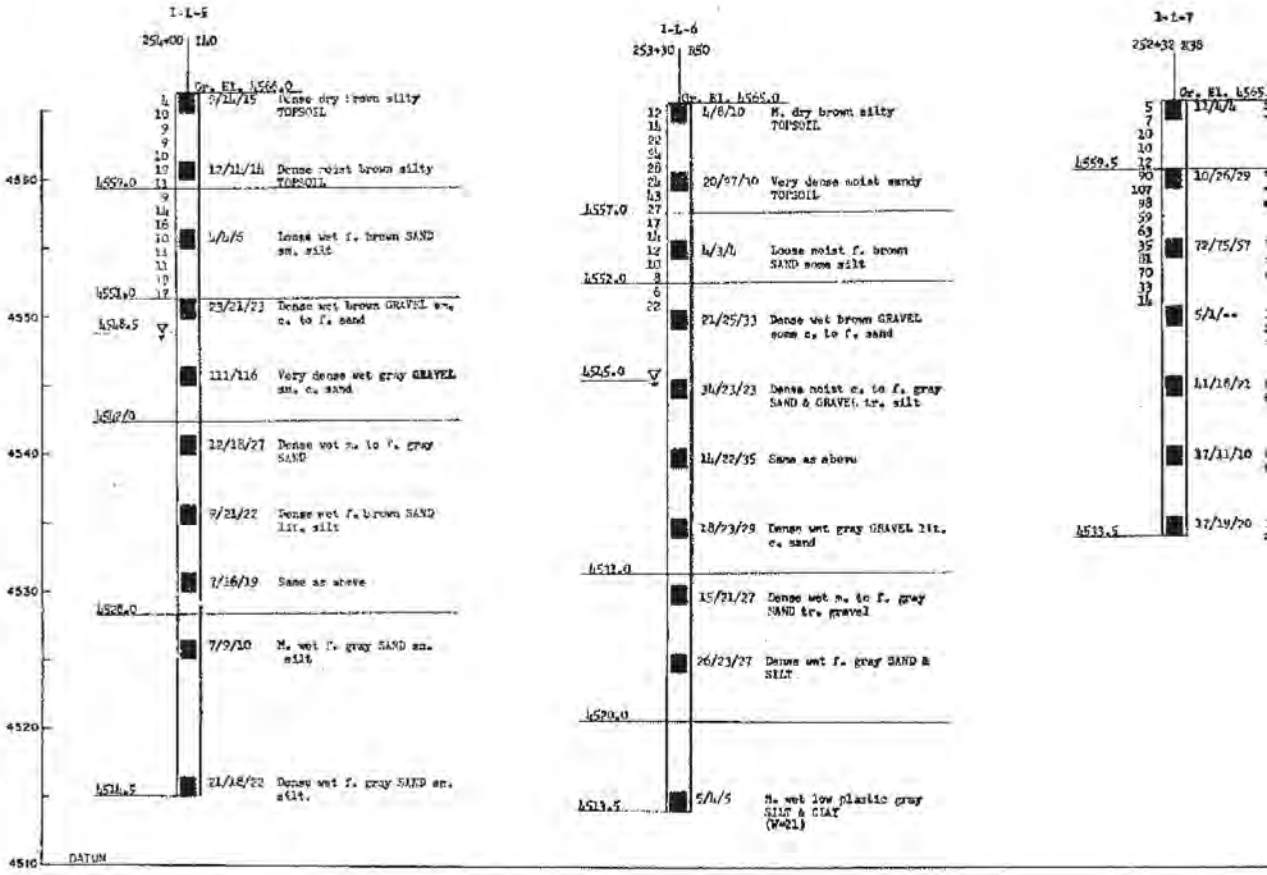


**FOR INFORMATION ONLY**

DGN Files: P:\Pdens\16721\4431C-045-R4.Pdens\Design
05-MAY-2008

| FED. ROAD DIST. NO. | STATE | FED. RD PROJ. NO. | FISCAL YEAR | SHEET NO. | TOTAL SHEETS |
|---|---|---|---|---|---|
| U. T. | UTAH | | POST WAR | | |

## LEGEND

Boring No. — 1-L-1

Interstate Station — 22+63 — 172 — Offset

Ground Elevation — Gr. El. 4562

Ground Water Table Elevation — 4557.3 12/17

Number of Blows Used to drive casing 1¾ inches with 300 lb. hammer falling 2 ft. (Typical)

Strata Change Elevation (Typical) — 4550

Boring Advanced Without Casing

Location of Sample (Typical) — 4539

Bottom of Boring Elevation — 4535.5

Number of Blows Used to drive 1-3/8" I.D. sampler with 140 lb. hammer falling 30 inches — 1st. 6 inches, 2nd. 6 inches, 3rd. 6 inches

Visual soil description for each sample and results of classification tests, if any (Typical)

ABBREVIATIONS IF AND WHEN USED:

br. = brown
gr. = gray
org. = organic
f. = fine
v. f. = very fine
m. = medium
c. = coarse
sm. = some
tr. = trace
lit. = little
LL = Liquid Limit in %
PL = Plastic Limit in %
W = Natural Moisture Content in %
qu = Unconfined compression test from pocket penetrometer in T/ft²

1-L-1

| Elevation | Blows | Description |
|---|---|---|
| 4560 | 3, 7, 9 | 2/1/5 Stiff m. plastic brown clay some silt, TOPSOIL |
| | 12, 17, 10, 17, 22, 33, 40 | 12/12/17 M. dense wet tan m. to c. SAND, some silt, tr. f. gravel |
| | 36, 43, 86 | 15/21/30 Dense wet tan m. to c. SAND, some gravel |
| | 92, 206 | |
| | | 7/6/8 Stiff, low plastic brown CLAY & SILT, tr. f. sand (LL = 40, PL = 28, W = 32) |
| | | 11/10/12 Very stiff, plastic gray CLAY & SILT, tr. f. sand (W = 35, qu = 17/ft²) |
| 4535.5 | | 9/12/20 Very stiff varved plastic gray silty CLAY & f. silty SAND |

1-L-8

| Elevation | Blows | Description |
|---|---|---|
| 253+10 | 135 | |
| Gr. El. 4566.0 | | |
| | 15, 19, 12, 18 | 17/26/29 Hard dry silty brown TOPSOIL |
| 4562.0 | | |
| | 40, 53, 76, 135, 116, 126 | 69/67/72 Very dense dry c. to f. brown SAND & GRAVEL |
| | 147, 66, 71, 75, 65 | 47/54/56 Very dense wet c. brown SAND & GRAVEL |
| | | 29/24/23 Dense wet c. to f. brown SAND & GRAVEL |
| | | 31/30/33 Very dense wet gray GRAVEL and c. SAND |
| | | 19/23/42 Dense wet brown GRAVEL lit. c. to f. sand |
| | | 21/25/29 Dense wet c. to f. brown SAND & GRAVEL |
| 4511.0 | | |
| | | 12/13/18 Dense wet m. to f. brown SAND tr. gravel |
| | | 15/17/13 Dense wet m. to f. brown SAND tr. gravel |
| 4514.5 | | 11/12/10 Stiff wet gray slightly plastic clayey SILT (W=28) |

Stiff moist brown silty TOPSOIL

Very dense moist brown very f. SAND & SILT lit. c. gravel FILL

Very dense wet gray f. to c. SAND and f. to m. gravel

Loose very wet brown f. SAND some silt some f. to m. gravel

Dense wet gray f. to m. GRAVEL

f. moist gray f. to m. GRAVEL some f. to c. sand

Dense wet gray f. to c. GRAVEL

## BORING LOGS

SHEET 12 OF 14 SHEETS

UTAH STATE ROAD COMMISSION
SALT LAKE CITY, UTAH
BRIDGE DEPARTMENT

AMERICAN FORK 3RD WEST OVERPASS

146'-5½" O. TO O. — 127° XING ∠
STA. 253+15.493 — I-15-6 (3) 73 (5)
LEHI - PROVO — UTAH COUNTY

DESIGN AND DRAWING BY
WESTERN ENGINEERS, INC. AND
EDWARDS AND KELCEY
CONSULTING ENGINEERS

SUBMITTED BY — CHIEF ENGINEER
UTAH ENGR. LIC. NO. 2164

REGISTERED PROFESSIONAL ENGINEER NO. 2164 J. R. NEWVILLE STATE OF UTAH

DESIGNED BY — DRAWN BY — TRACED BY — CHECKED BY — CHIEF BRIDGE ENGINEER

No. — DWG. No. C-345

STRUCTURE 1-L

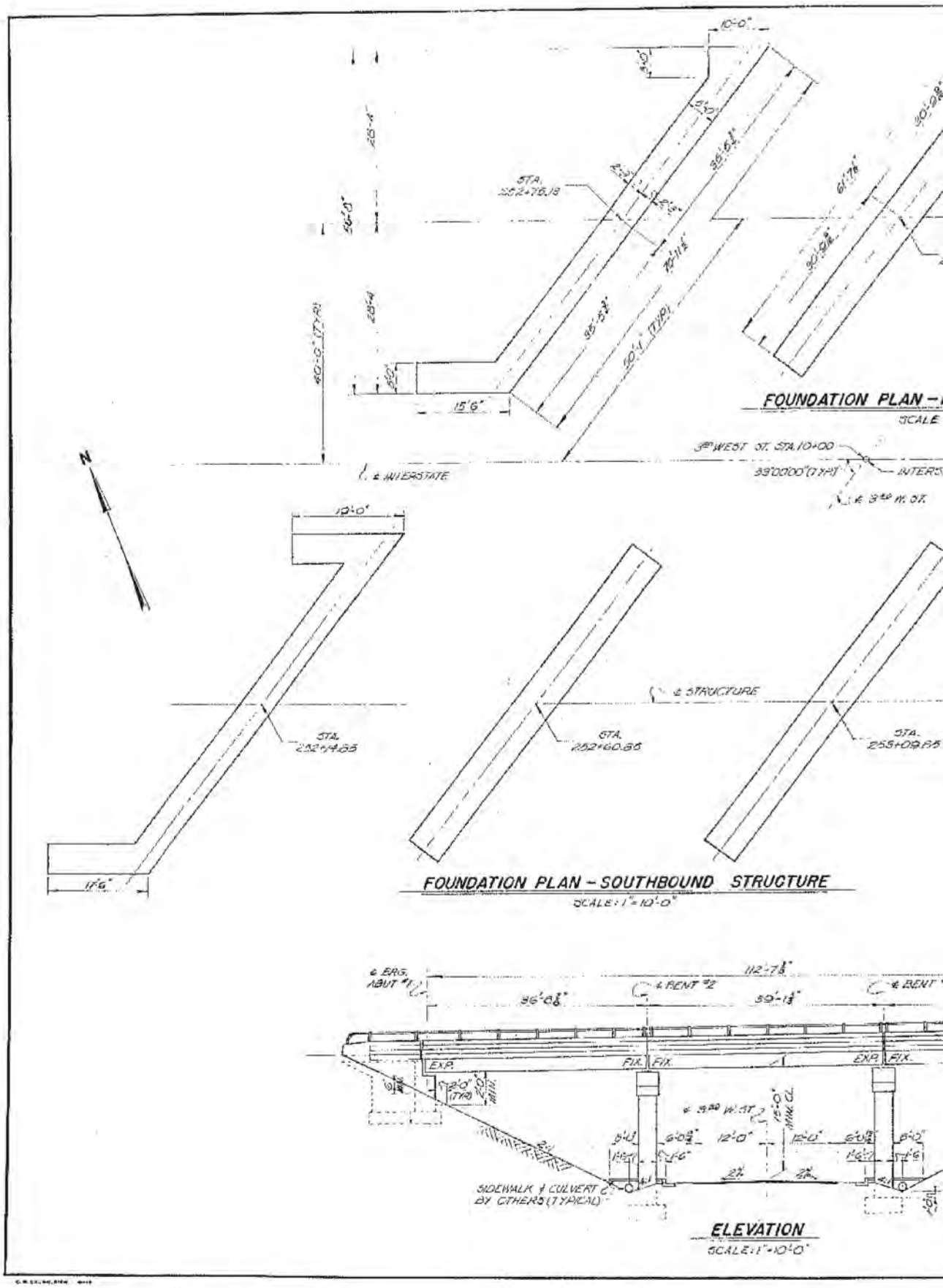
FOUNDATION PLAN -
SCALE
STA. 252+76.18
10'-0"
15'6"
40'-0" (TYP.)
10'-1" (TYP.)
WEST ST. STA. 10+00
INTERSTATE
℄ STRUCTURE
STA. 252+14.85
STA. 252+60.86
17'6"
FOUNDATION PLAN - SOUTHBOUND STRUCTURE
SCALE: 1" = 10'-0"
℄ BRG. ABUT #1
℄ BENT #2
112'-7⅛"
36'-0⅛"
39'-1⅛"
EXP.
FIX.
SIDEWALK & CULVERT BY OTHERS (TYPICAL)
ELEVATION
SCALE: 1" = 10'-0"

[redacted]

| FED. ROAD DIST. NO. | STATE | FED. AID PROJ. NO. | FISCAL YEAR | SHEET NO. | TOTAL SHEETS |
|---|---|---|---|---|---|
| U. T. | UTAH | | POST WAR | | 14 |

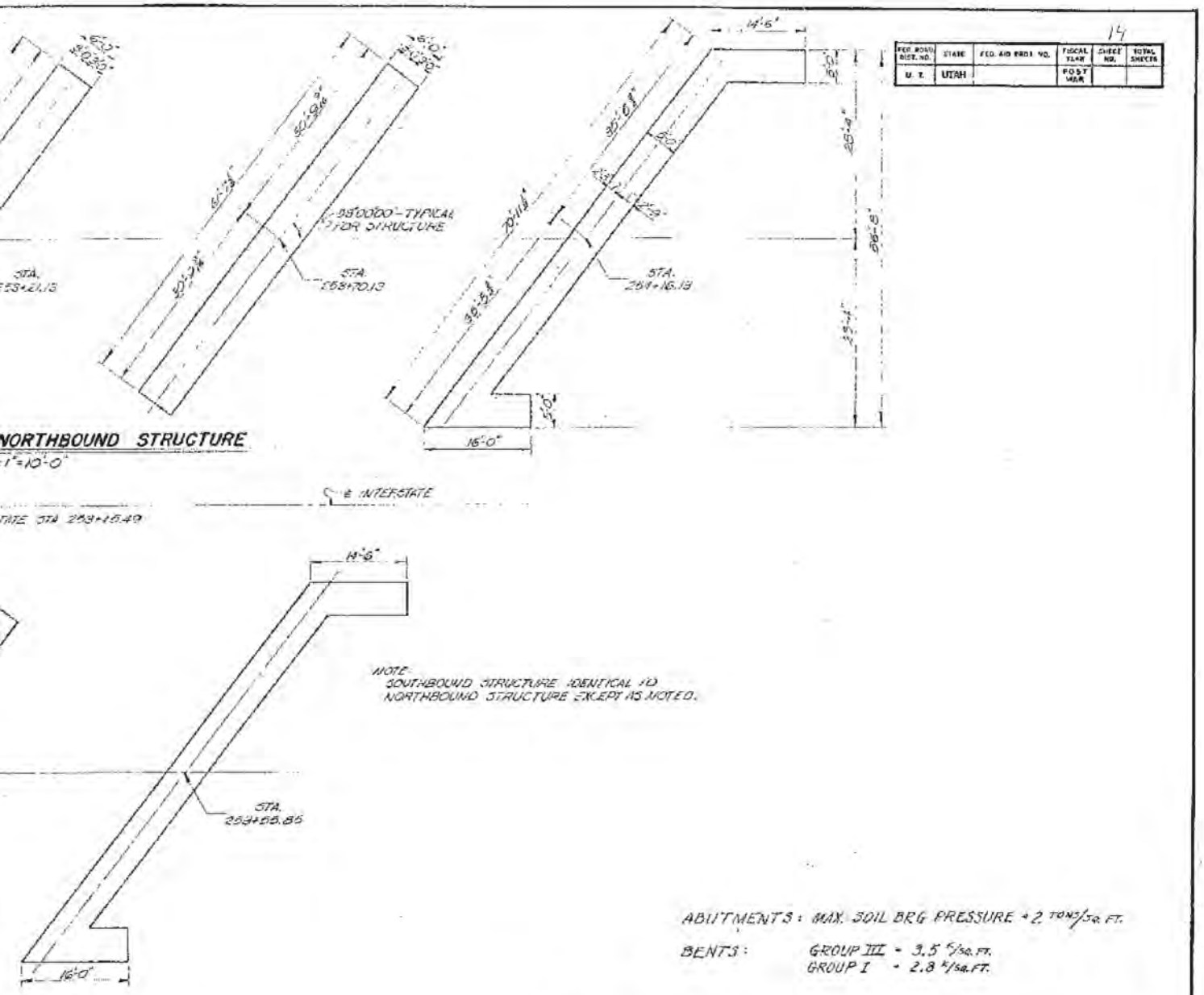


ABUTMENTS: MAX. SOIL BRG PRESSURE = 2 TONS/SQ. FT.

BENTS: GROUP III = 3.5 K/SQ. FT.
GROUP I = 2.8 K/SQ. FT.

**FOR INFORMATION ONLY**

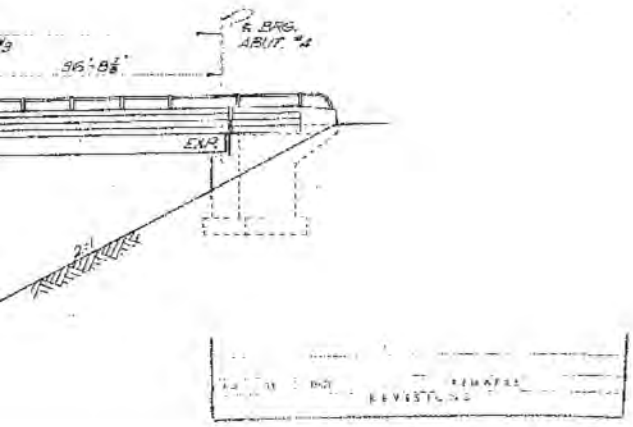


REVISIONS

REGISTERED PROFESSIONAL ENGINEER NO. 2164 J. R. NEWVILLE STATE OF UTAH

DESIGN AND DRAWING BY
WESTERN ENGINEERS, INC. AND
EDWARDS AND KELCEY
CONSULTING ENGINEERS

SUBMITTED BY J. R. Newville CHIEF ENGINEER
UTAH ENGR. REG. NO. 2164

SHEET 5 OF 14 SHEETS

UTAH STATE ROAD COMMISSION
SALT LAKE CITY, UTAH
BRIDGE DEPARTMENT

**AMERICAN FORK 3RD WEST OVERPASS**

146'-5½" O. TO O. 127° XING ℄
STA. 263+18.493 I-15-6(59)271 (7th Const.)
LEHI-PROVO UTAH COUNTY

DESIGNED BY B.K. & W.R. SCALE AS SHOWN
DRAWN BY C.J.A. DATE May 22, 1961
TRACED BY C.J.A. APPROVED B. L. Sargent CHIEF BRIDGE ENGINEER
CHECKED BY B.K.

BR. NO. DWG. NO. C-345

STRUCTURE 1-L

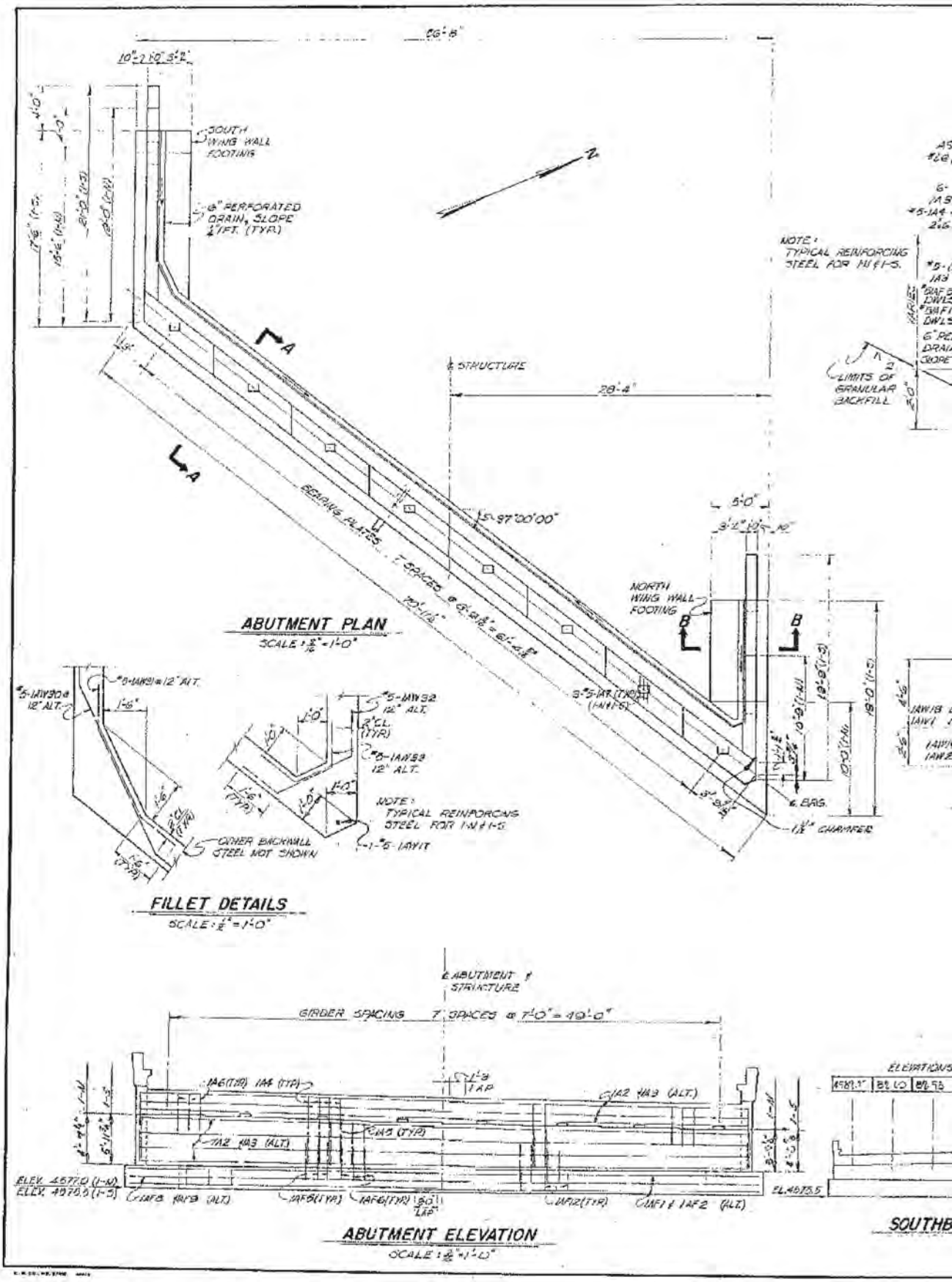
ABUTMENT PLAN
SCALE: 1/16" = 1'-0"
FILLET DETAILS
SCALE: 1/2" = 1'-0"
ABUTMENT ELEVATION
SCALE: 1/8" = 1'-0"
SOUTH WING WALL FOOTING
6" PERFORATED DRAIN, SLOPE 1/4"/FT. (TYP.)
NORTH WING WALL FOOTING
BEARING PLATES
GIRDER SPACING 7 SPACES @ 7'-0" = 49'-0"
NOTE: TYPICAL REINFORCING STEEL FOR W1 & 1-S.
NOTE: TYPICAL REINFORCING STEEL FOR 1-N & 1-S.
OTHER BACKWALL STEEL NOT SHOWN
LIMITS OF GRANULAR BACKFILL
1/2" CHAMFER
ELEVATIONS

| FED. ROAD PROJ. NO. | STATE | FED. AID PROJ. NO. | FISCAL YEAR | SHEET NO. | TOTAL SHEETS |
|---|---|---|---|---|---|
| U.T. | UTAH | | WORK YEAR | | |

15

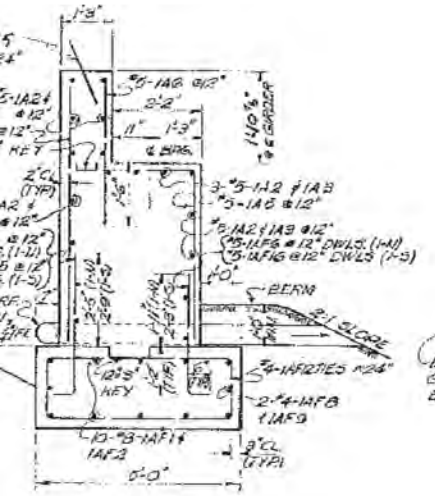


SECTION A-A
SCALE: 1/2" = 1'-0"

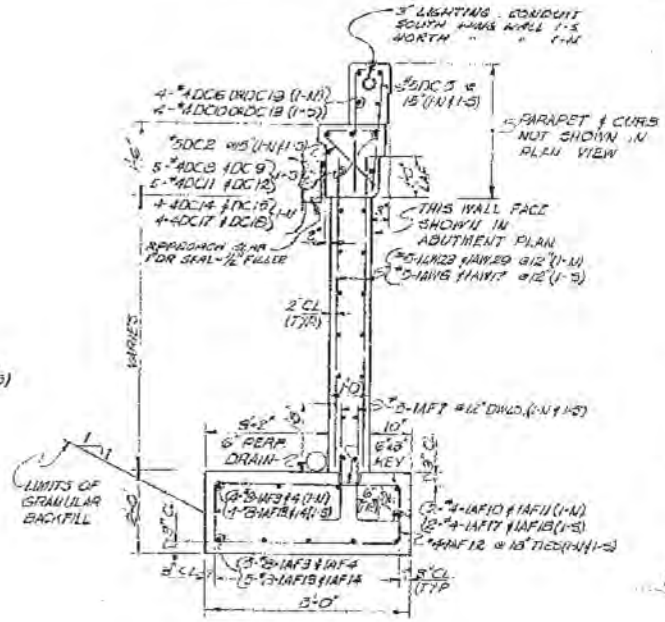


SECTION B-B
SCALE: 1/2" = 1'-0"

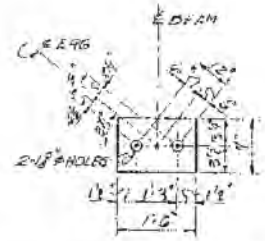


EXPANSION SHOE PLACEMENT
SCALE: 1" = 1'-0"

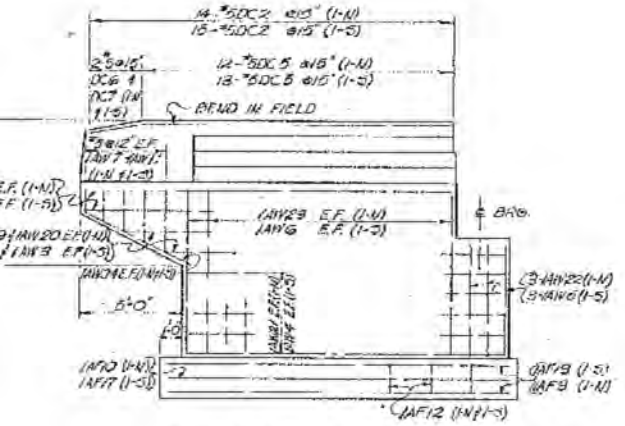


SOUTH WING WALL ELEVATION
SCALE: 1/4" = 1'-0"

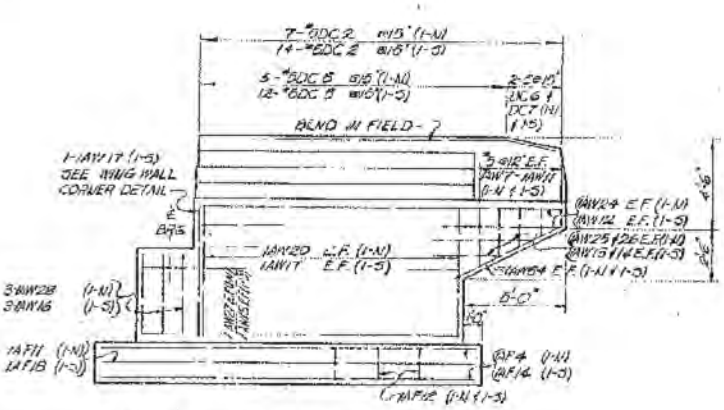


NORTH WING WALL ELEVATION
SCALE: 1/4" = 1'-0"

**FOR INFORMATION ONLY**

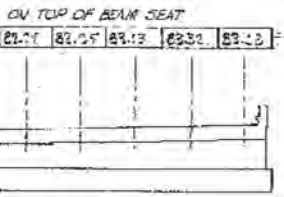


OUND STRUCTURE

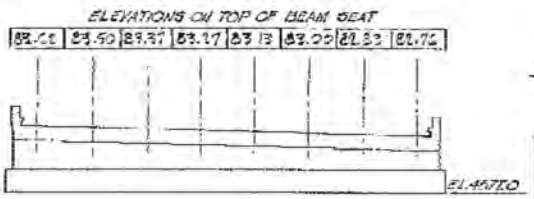


NORTHBOUND STRUCTURE

REGISTERED PROFESSIONAL ENGINEER NO. 2164 J. R. WENVILLE STATE OF UTAH

ABUTMENTS 1-N & 1-S

DESIGN AND DRAWING BY
WESTERN ENGINEERS, INC. AND
EDWARDS AND KELCEY
CONSULTING ENGINEERS

SUBMITTED BY J. R. Wenville CHIEF ENGINEER
UTAH ENGR. REG. NO. 2164

SHEET 6 OF 14 SHEETS

UTAH STATE ROAD COMMISSION
SALT LAKE CITY, UTAH
BRIDGE DEPARTMENT

AMERICAN FORK 3RD WEST OVERPASS
146'-5 1/8" O. TO O. 127° XING ∠
STA 253+15.493 I-15-6(14)324 NS
I 8H1-PROVO UTAH COUNTY

DESIGNED BY M.K. SCALE AS SHOWN
DRAWN BY C.L.A. DATE May 12, 1961
TRACED BY C.L.A. APPROVED
CHIEF BRIDGE ENGINEER
DR. NO. DWG. NO. C-345

STRUCTURE I-L

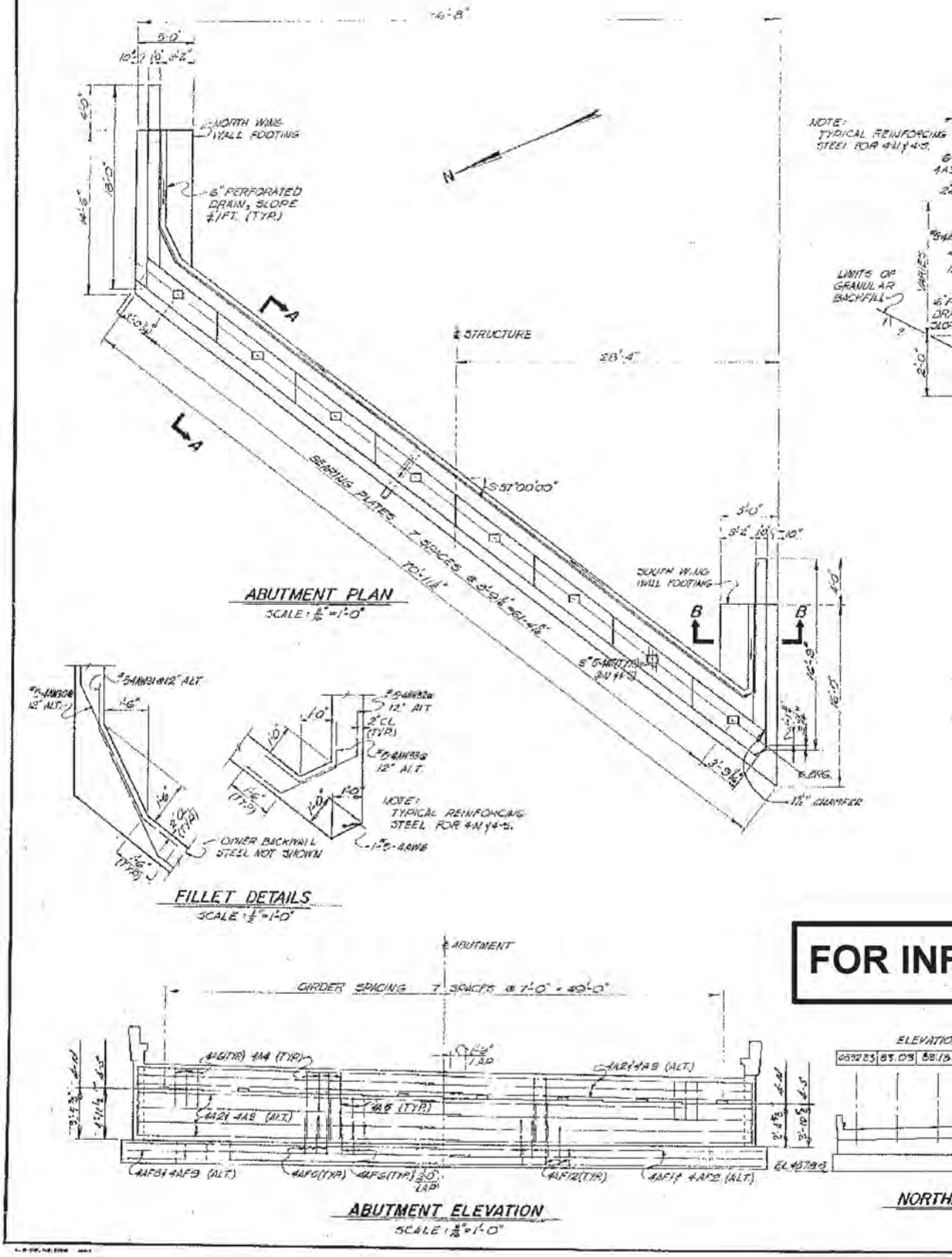
NORTH WING WALL FOOTING
6" PERFORATED DRAIN, SLOPE ¼/FT. (TYP.)
℄ STRUCTURE
SEATING PLATES 7 SPACES @ 3'-9½" = 26'-4½"
S 57°00'00"
SOUTH WING WALL FOOTING
1½" CHAMFER
ABUTMENT PLAN
SCALE: 3/16" = 1'-0"
OTHER BACKWALL STEEL NOT SHOWN
NOTE: TYPICAL REINFORCING STEEL FOR 4-N & 4-S.
FILLET DETAILS
SCALE: ½" = 1'-0"
℄ ABUTMENT
GIRDER SPACING 7 SPACES @ 7'-0" = 49'-0"
ABUTMENT ELEVATION
SCALE: 3/16" = 1'-0"
LIMITS OF GRANULAR BACKFILL
NORTH
FOR INF

| FED. ROAD DIST. NO. | STATE | FED. AID PROJ. NO. | FISCAL YEAR | SHEET NO. | TOTAL SHEETS |
|---|---|---|---|---|---|
| 4 T. | UTAH | | POST WAR | | |

16

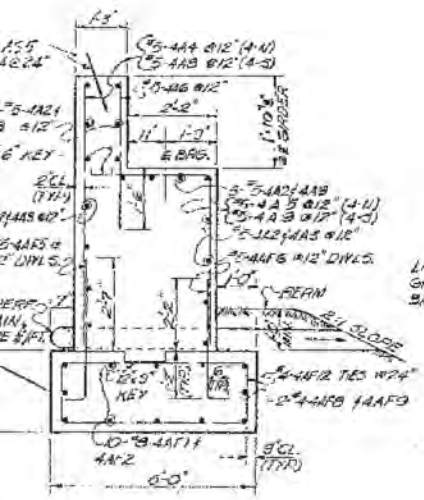

SECTION A-A
SCALE: 1/2" = 1'-0"

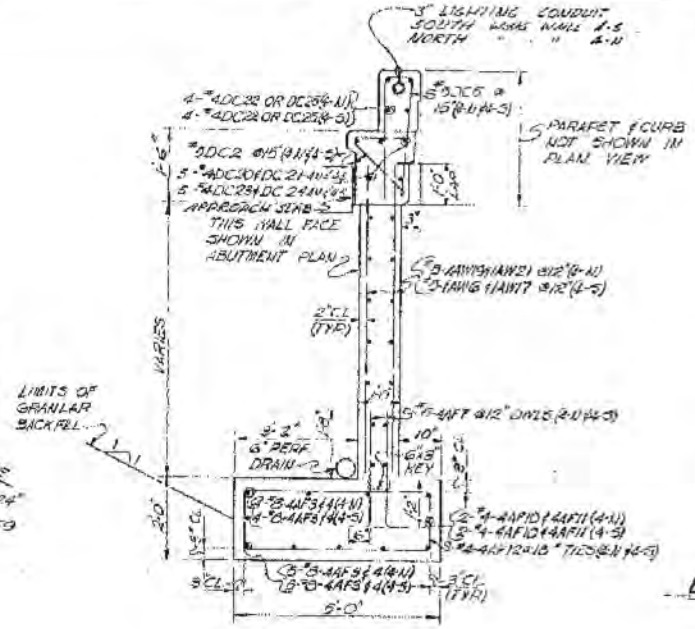


SECTION B-B
SCALE: 1/2" = 1'-0"

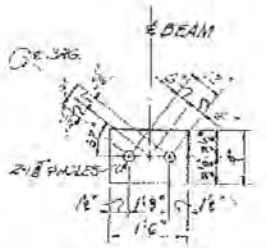


EXPANSION SHOE PLACEMENT
SCALE: 1" = 1'-0"

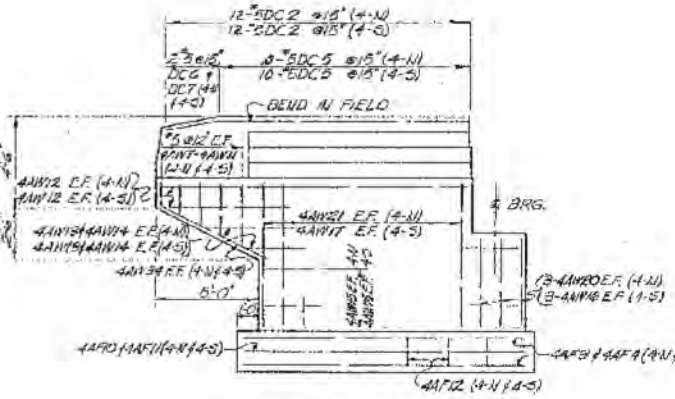


SOUTH WING WALL ELEVATION
SCALE: 1/4" = 1'-0"

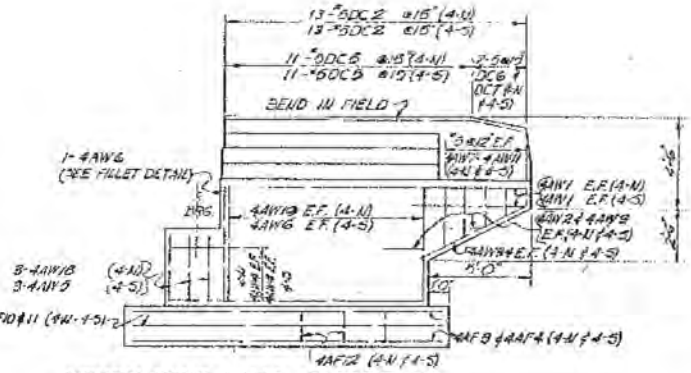


NORTH WING WALL ELEVATION
SCALE: 1/4" = 1'-0"

**FORMATION ONLY**

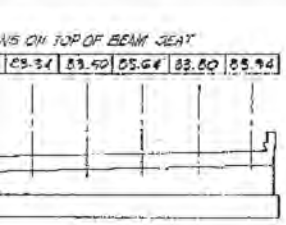


BOUND STRUCTURE

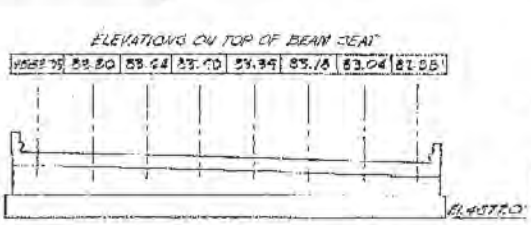


SOUTHBOUND STRUCTURE

REGISTERED PROFESSIONAL ENGINEER
NO. 2164
J. A. NEWVILLE
STATE OF UTAH

ABUTMENTS 4-N & 4-S

SHEET 7 OF 14 SHEETS

UTAH STATE ROAD COMMISSION
SALT LAKE CITY, UTAH
BRIDGE DEPARTMENT

AMERICAN FORK 3RD WEST OVERPASS
146'-5 1/8" O. TO O. 127° XING ℄
STA. 753 + 15.483 C-15-6(13)271
LEHI - PROVO UTAH COUNTY

DESIGNED BY M.K. SCALE AS SHOWN
DRAWN BY C.J.A. ISSUED May 22, 1961
TRACED BY C.J.A. APPROVED B. L. Sorensen
CHECKED BY D.H.K. CHIEF BRIDGE ENGINEER

DESIGN AND DRAWING BY
WESTERN ENGINEERS, INC. AND
EDWARDS AND KELCEY
CONSULTING ENGINEERS

SUBMITTED BY [signature] CHIEF ENGINEER
UTAH ENGR. LIC. NO. 2164

BR. No. DWG. No. C-345

STRUCTURE I-L

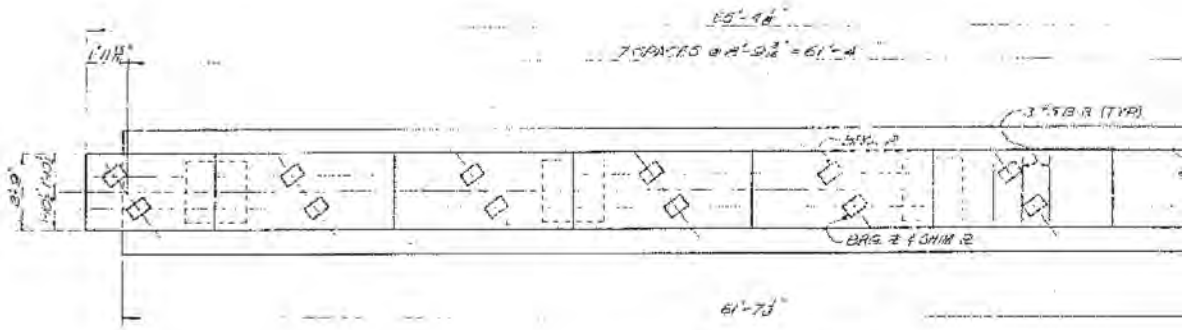


PLAN BENTS NO. 2 & 3

SCALE: 1/4" = 1'-0"

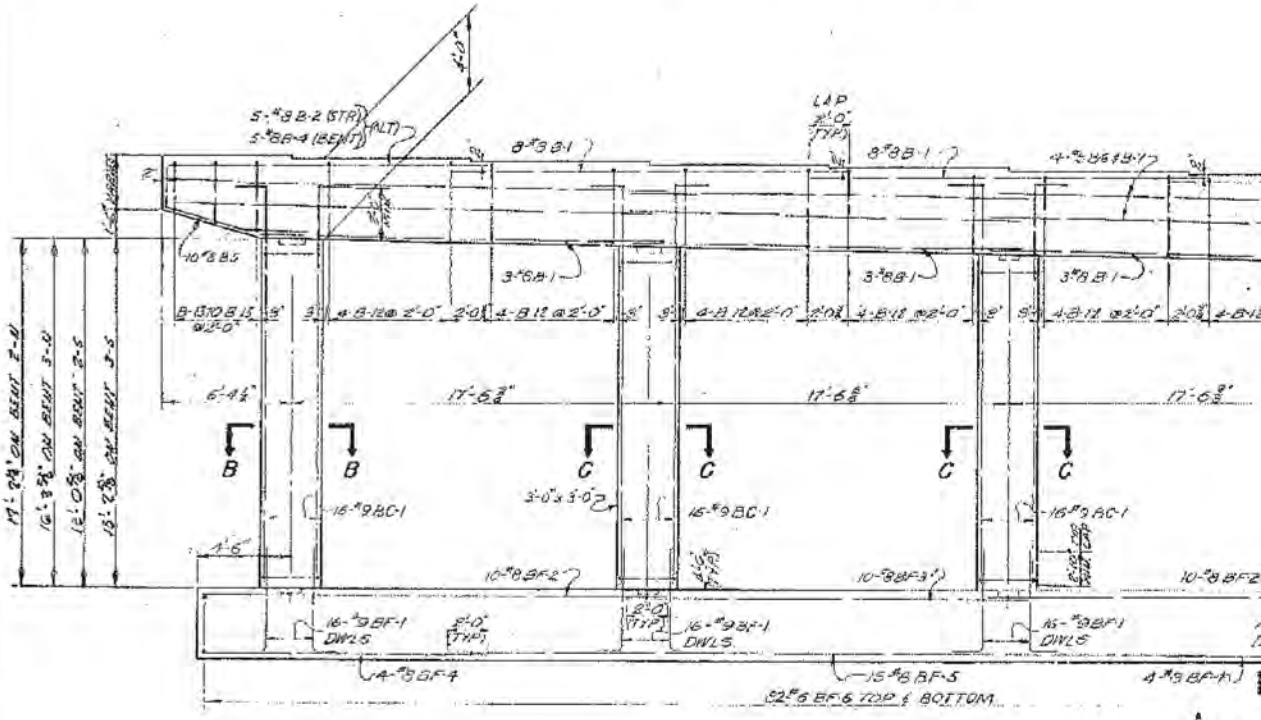


ELEVATION BENTS NO. 2 & 3

SCALE: 1/4" = 1'-0"

ELEVATION ON TOP OF BENT

| | | | | | | | | |
|---|---|---|---|---|---|---|---|---|
| BENT #2 | 83.88 | 83.82 | 83.75 | 83.69 | 83.62 | 83.56 | 83.68 | 83.82 |
| SHIMS | 1/8 | 0 | 0 | 0 | 1/8 | 0 | 1/8 | 1/8 |
| BENT #3 | 83.92 | 83.84 | 83.81 | 83.76 | 83.71 | 83.63 | 83.72 | 83.82 |
| SHIMS | 0 | 0 | 1/8 | 1/8 | 0 | 0 | 0 | 1/8 |

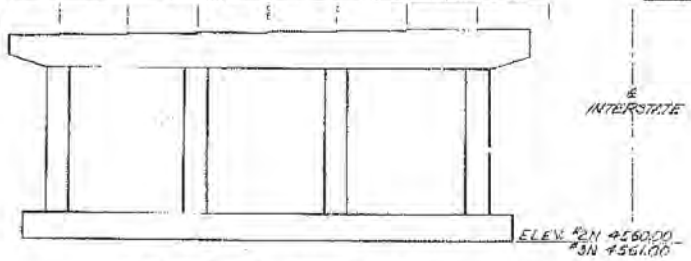


NORTHBOUND STRUCTURE

ELEVATION ON TO

| | | | | | |
|---|---|---|---|---|---|
| BENT #2 | 83.71 | 83.65 | 83.58 | 83.71 | 83. |
| SHIMS | 1/4 | 1/4 | 1/4 | 1/8 | |
| BENT #3 | 83.88 | 83.72 | 83.66 | 83.41 | 83. |
| SHIMS | 0 | 1/8 | 1/8 | 1/8 | 0 |

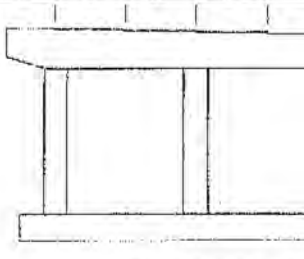

SOUTHBOUND ST

[redacted]

DGN Files IP PWPubns\16721\4433.C-045-88.PlanFigure
02-MAY-2005

17

| F.E.S. BOND DIST. NO. | STATE | FED. AID PROJ. NO. | FISCAL YEAR | SHEET NO. | TOTAL SHEETS |
|---|---|---|---|---|---|
| M 1. | UTAH | | POST WAR | | |

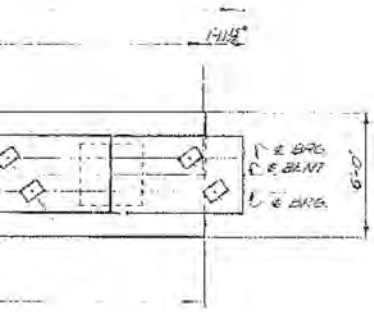

ANCHOR BOLT LOCATION PLAN
BENTS NO. 2 & 3
SCALE: 1"=1'-0"

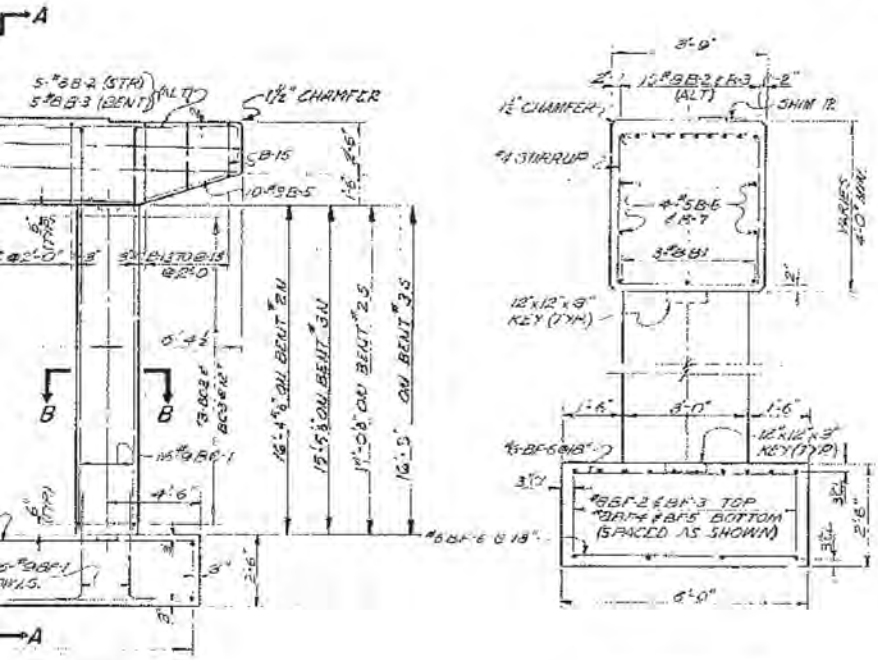





SECTION A-A
SCALE: ½"=1'-0"

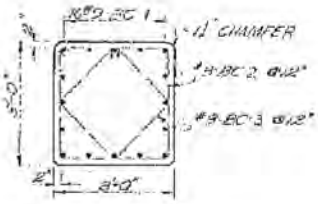


SECTION B-B & C-C
SCALE: ½"=1'-0"

S AS SHOWN ARE ELEVATIONS

P OF BENT

| | | | |
|---|---|---|---|
| 04 | 82.27 | 82.69 | 82.51 |
| 9 | 0 | 1/8 | 1/4 |
| 24 | 83.07 | 82.92 | 82.75 |
| | 1/8 | 1/8 | 0 |

NOTE:
SHIM PLATES ARE REQUIRED UNDER EAST BEARING PLATES ONLY.

**FOR INFORMATION ONLY**

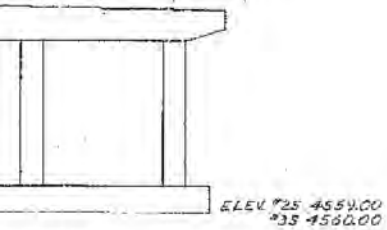


RUCTURE

BENTS NO. 2 & 3

REGISTERED PROFESSIONAL ENGINEER NO. 2164 J. R. HOWELLS STATE OF UTAH

DESIGN AND DRAWING BY
WESTERN ENGINEERS, INC. AND
EDWARDS AND KELCEY
CONSULTING ENGINEERS

SUBMITTED BY J. R. Howells CHIEF ENGINEER
UTAH ENGR. LIC. NO. 2164

SHEET 8 OF 14 SHEETS

UTAH STATE ROAD COMMISSION
SALT LAKE CITY, UTAH
BRIDGE DEPARTMENT

AMERICAN FORK 3RD WEST OVERPASS
146-5½" O. TO O. 127° XING ∠
STA. 253+15.93 I-15-6 (57) (1)
LEHI-PROVO UTAH COUNTY

DESIGNED BY B.K. & B.T. SCALE AS SHOWN
DRAWN BY C.L.A. ISSUED May 28, 1961
TRACED BY C.L.A. APPROVED
CHECKED BY CHIEF BRIDGE ENGINEER

DR. NO. DWG. NO. C-345

STRUCTURE 1-L

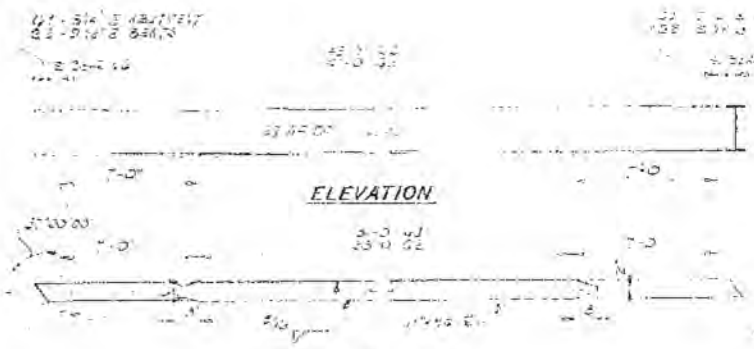

ELEVATION

BOTTOM VIEW

G1 - 32 THUS

G2 - 16 THUS

·PARABOLIC · CAMBER·

·DIAGRAM·

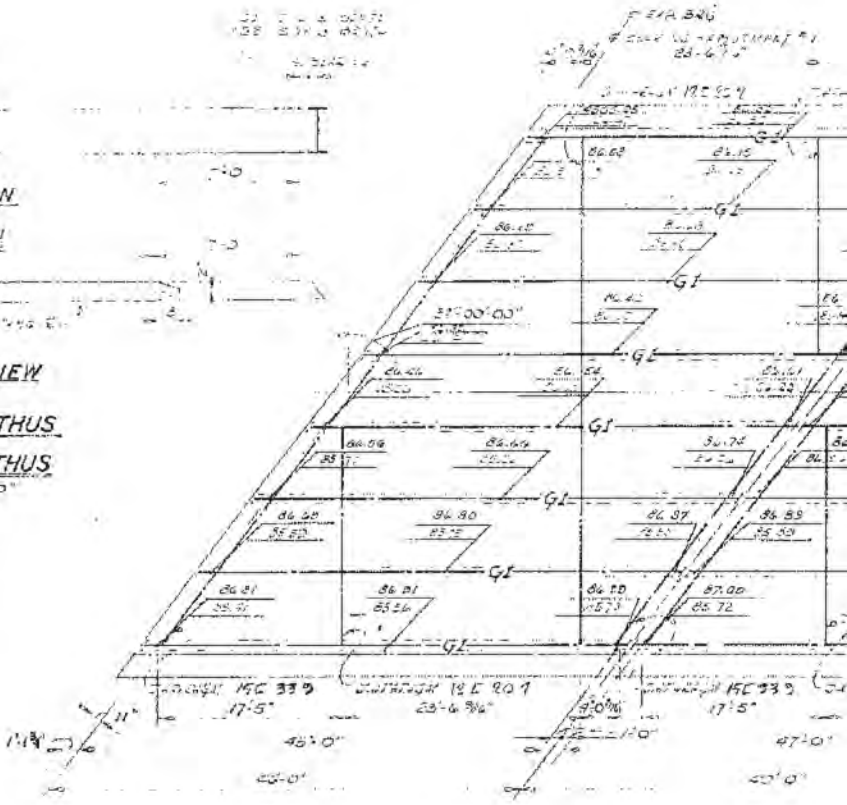

FR

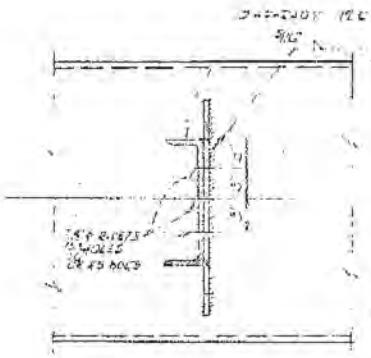

SECTION THRU CHANNEL

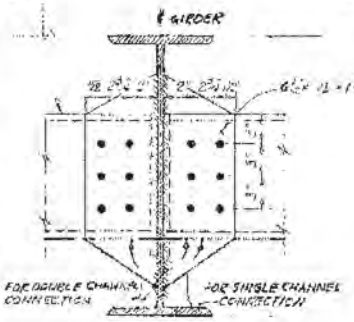


SECTION THRU GIRDER

DETAIL - A

**FOR INFORMATION ONLY**

[redacted]

| FED ROAD DIST. NO. | STATE | FED. NO. PROJ. NO. | FISCAL YEAR | SHEET NO. | TOTAL SHEETS |
|---|---|---|---|---|---|
| U.T. | UTAH | | POST AGR | | |

18

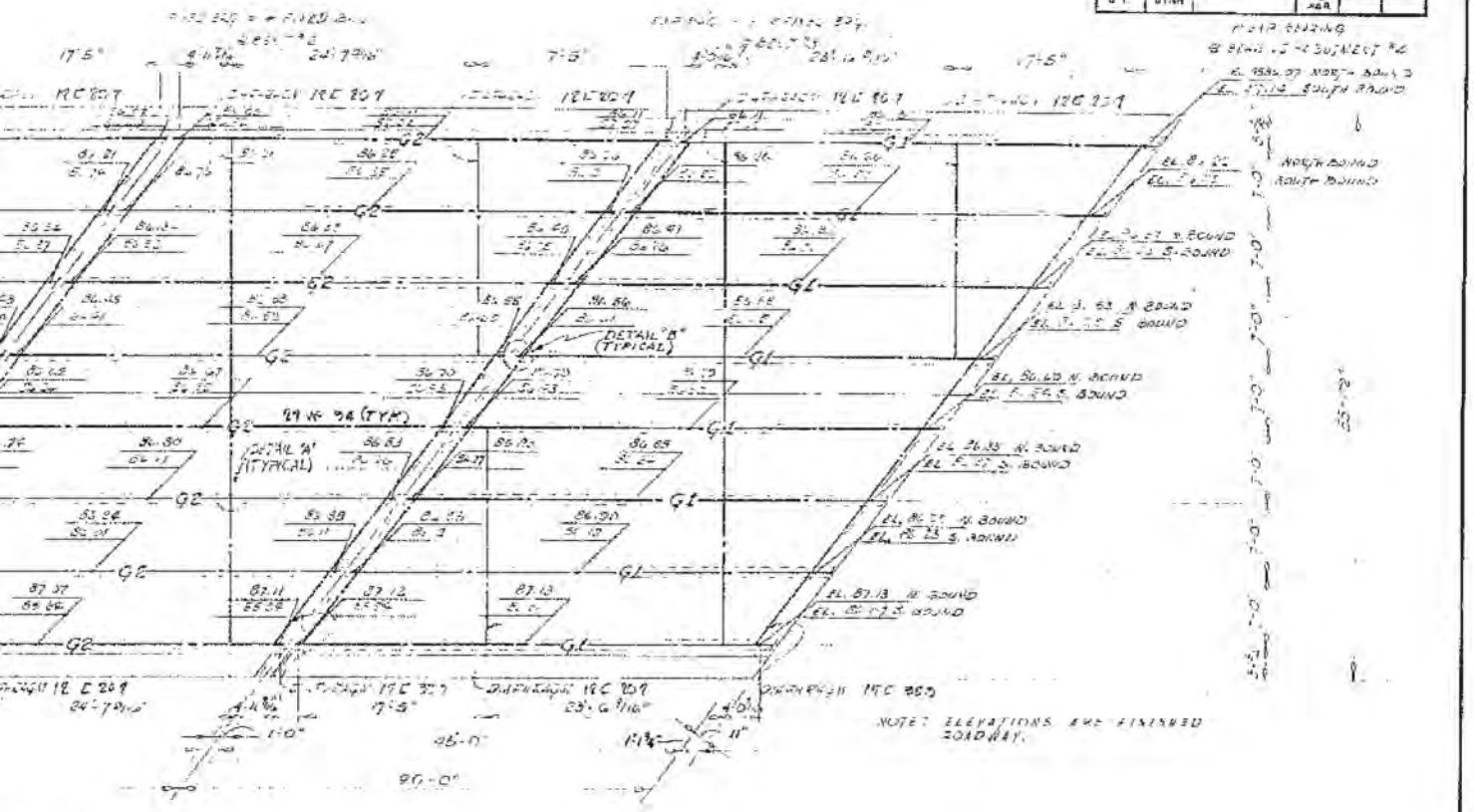


AMING PLAN

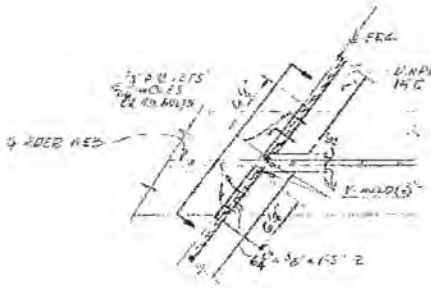

PLAN

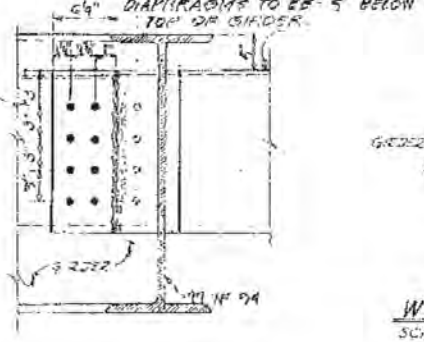


SECTION

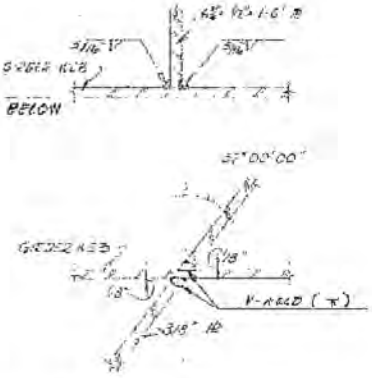


WELDING DETAILS
SCALE: 3" = 1'-0"

DETAIL - B
SCALE: 2" = 1'-0"

NOTES
SEE SHEET 11 FOR SHEAR DEVELOPER DETAILS.

FRAMING PLAN

REGISTERED PROFESSIONAL ENGINEER NO. 2164 J. R. KOWILLE STATE OF UTAH

DESIGN AND DRAWING BY
WESTERN ENGINEERS, INC. AND
EDWARDS AND KELCEY
CONSULTING ENGINEERS

CHIEF ENGINEER

UTAH ENGR. REG. NO. 2164

SHEET 9 OF 14 SHEETS

UTAH STATE ROAD COMMISSION
SALT LAKE CITY, UTAH
BRIDGE DEPARTMENT

AMERICAN FORK 3RD WEST OVERPASS
146'-5 1/8" O. TO O. 127° XING ∠
STA. 253+15.493 I-15-6(6)271
LEHI - PROVO UTAH COUNTY

DESIGNED BY MK-BT
DRAWN BY
TRACED BY
CHECKED BY DK
CHIEF BRIDGE ENGINEER

NO. C-345

STRUCTURE 1-L

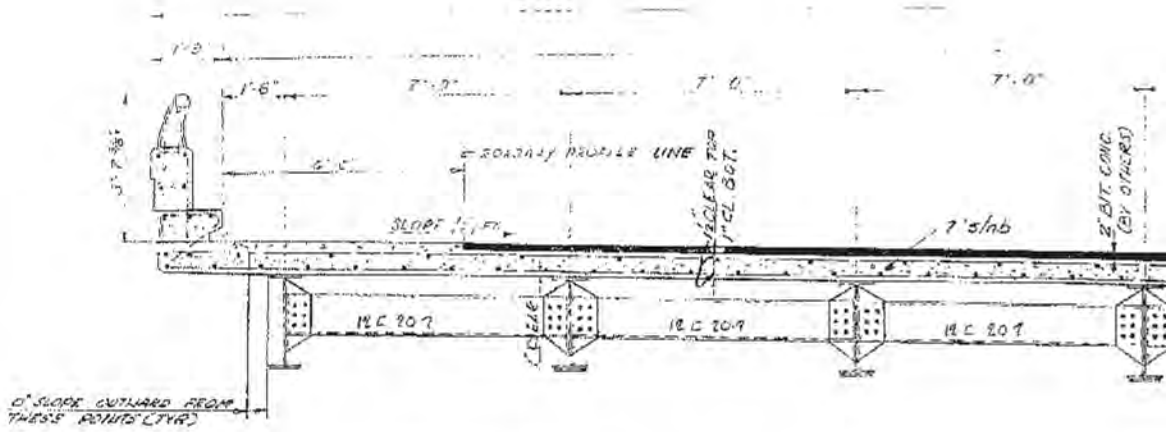


HALF SECTION IN SPAN

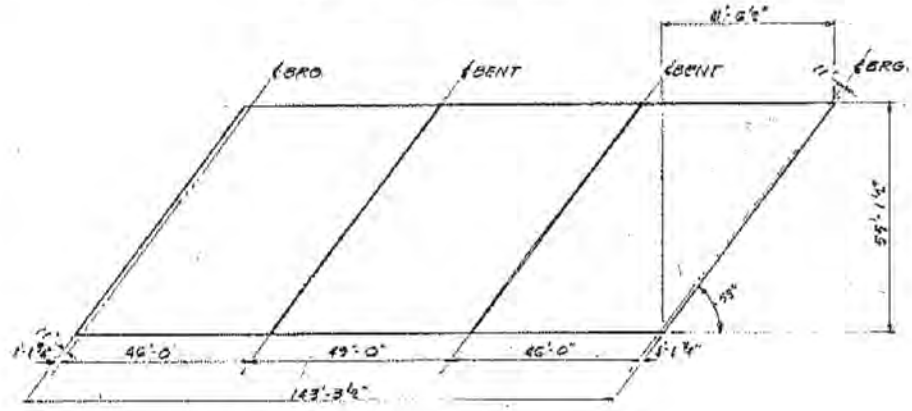


DECK PLAN

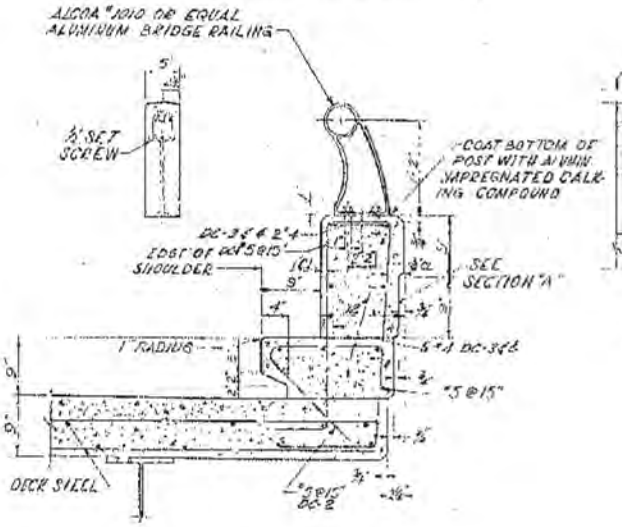


TYPICAL CURB DETAIL

SCALE: 1" = 1'-0"

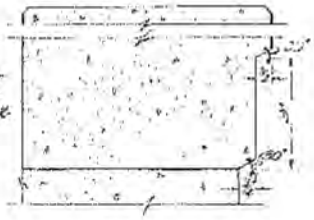

SECTION "A"

SCALE: FULL

NOTE: SEE SHEET 40-101 FOR RAILING DETAILS

"TYP

SCALE

NOTE:
GIRDE
ON S
GIRDL
OF C

| FED. ROAD DIST. NO. | STATE | FED. AID PROJ. NO. | FISCAL YEAR | SHEET NO. | TOTAL SHEETS |
|---|---|---|---|---|---|
| 11-1 | UTAH | | POST WAR | | |

19

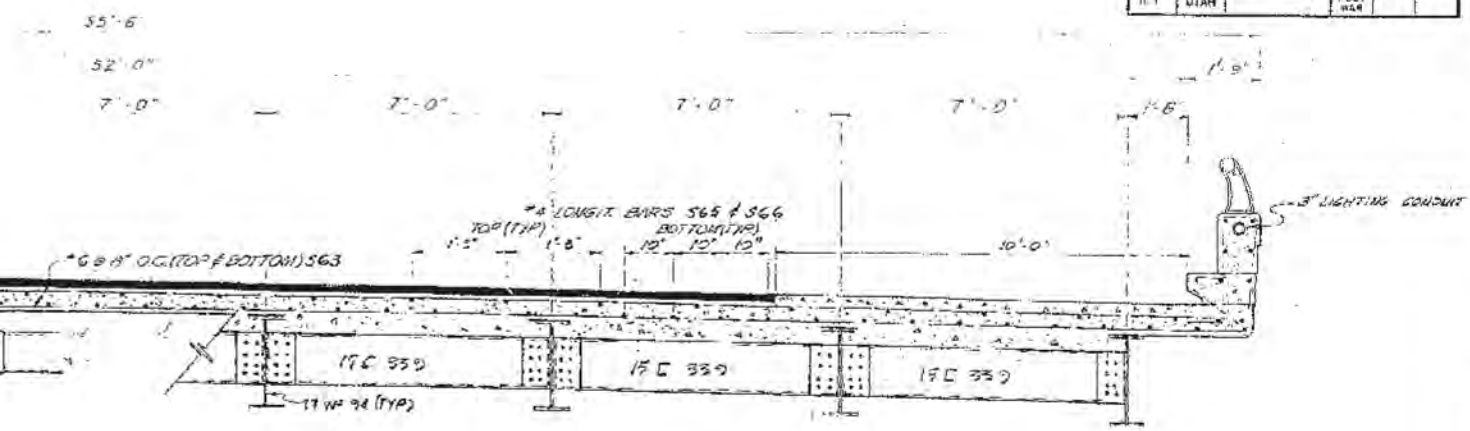


HALF SECTION AT BEARING

ICAL • CROSS • SECTION •
92' - 1'-0"

ES TO BE CAMBERED AS SHOWN
HEET 9 MAKING THE TOP OF
ES FLUSH WITH THE BOTTOM
ONCRETE.

**FOR INFORMATION ONLY**

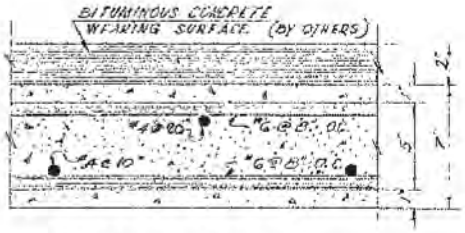


TYPICAL DECK DETAIL
SCALE: 3" = 1'-0"

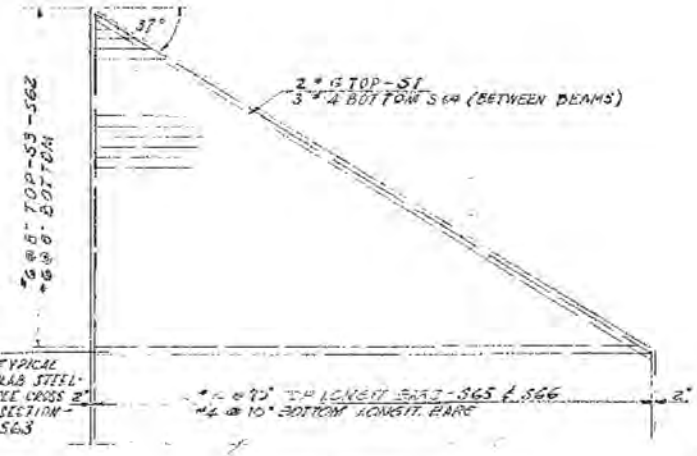


END OF BRIDGE DECK
SCALE: 1/8" = 1'-0"

TRANSVERSE SECTION

REGISTERED PROFESSIONAL ENGINEER
NO. 2164
J. R. NEWVILLE
STATE OF UTAH

DESIGN AND DRAWING BY
WESTERN ENGINEERS, INC. AND
EDWARDS AND KELCEY
CONSULTING ENGINEERS

SUBMITTED BY _____ CHIEF ENGINEER
UTAH ENGR. LIC. NO. 2164

SHEET 10 OF 14 SHEETS

UTAH STATE ROAD COMMISSION
SALT LAKE CITY, UTAH
BRIDGE DEPARTMENT

AMERICAN FORK 3RD WEST
OVERPASS
146'-5½" O. TO O. 127° XING ∠
STA. 253+12.495 1-15-6 (3)171 (2) CONT.
LEHI - PROVO UTAH COUNTY

DESIGNED BY BC-RJ
DRAWN BY RDN
TRACED BY RDN
CHECKED BY BC
STATE
TRACED Sept 27, 1961
APPROVED D. L. Sargent
CHIEF BRIDGE ENGINEER

DR. No.
DWG. No. C-345

STRUCTURE 1-L

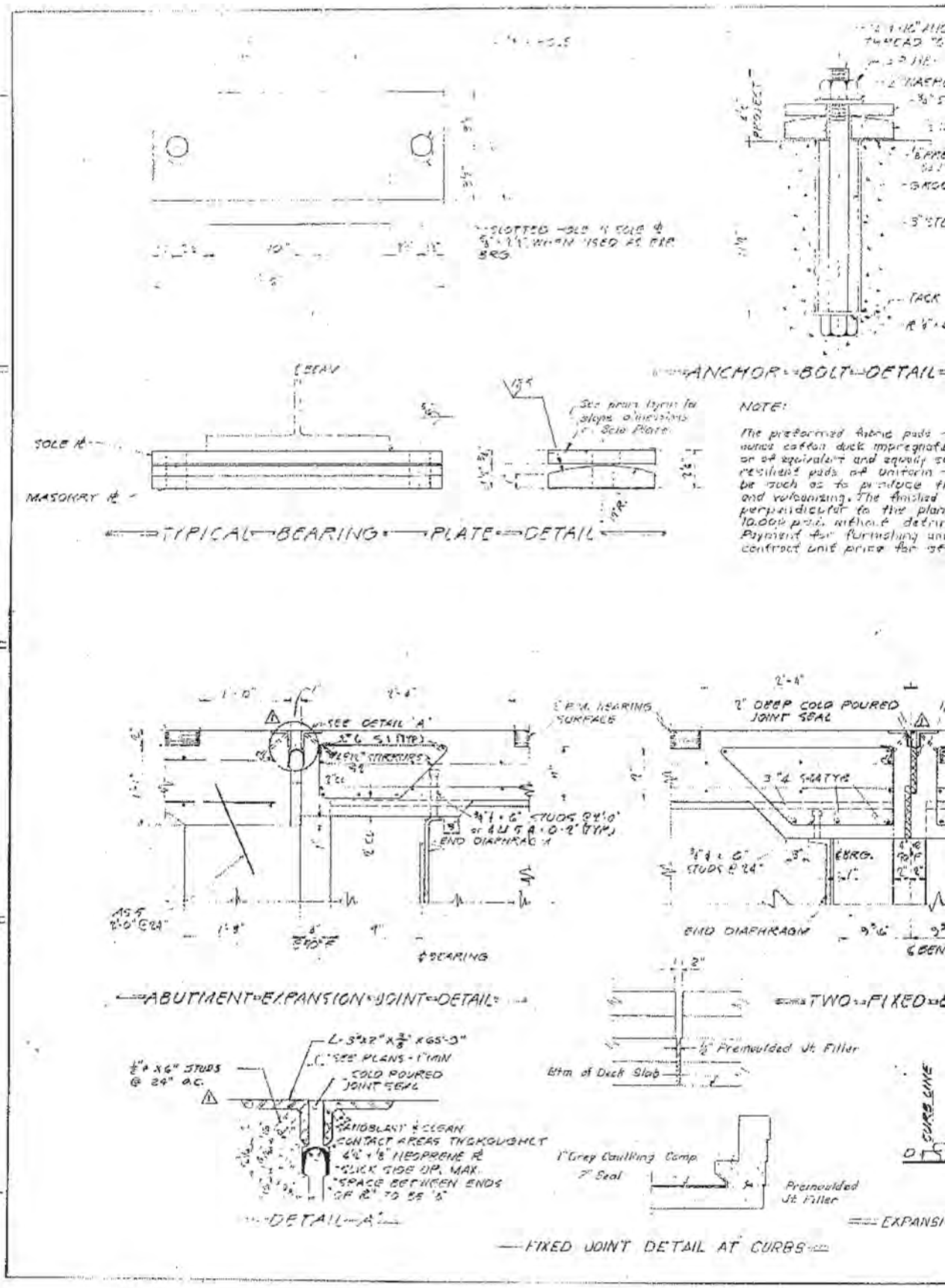
SLOTTED HOLE IN SOLE PL WHEN USED AS EXP BRG
ANCHOR BOLT DETAIL
TACK
SOLE PL
MASONRY PL
TYPICAL BEARING PLATE DETAIL
See prem. layout for slope dimensions of Sole Plate
NOTE:
SEE DETAIL 'A'
PRM. BEARING SURFACE
2" DEEP COLD POURED JOINT SEAL
END DIAPHRAGM
BEARING
ABUTMENT EXPANSION JOINT DETAIL
TWO FIXED
Preformed Jt Filler
Btm of Deck Slab
COLD POURED JOINT SEAL
SANDBLAST & CLEAN CONTACT AREAS THROUGHOUT
1" Grey Caulking Comp
Preformed Jt Filler
DETAIL 'A'
EXPANSI
FIXED JOINT DETAIL AT CURBS
REVISED BY
DATE

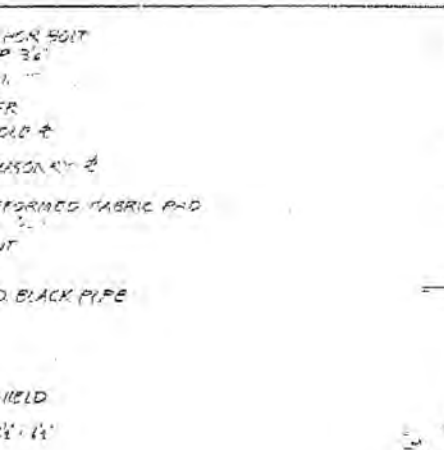


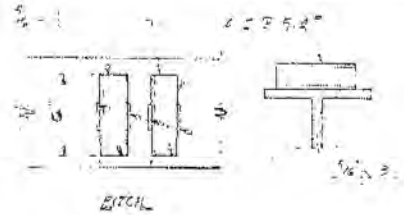


CHANNEL DETAILS

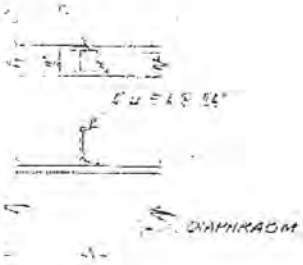


CHANNEL DETAILS
END DIAPHRAGMS

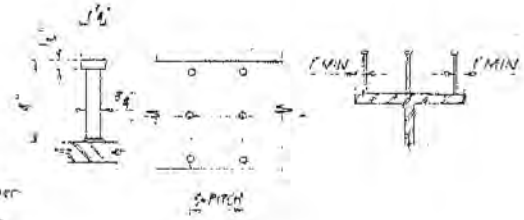


STUD DETAILS

| END SPANS | MID SPANS |
|---|---|
| 30 @ 4" = 10'-0" | 33 @ 4" = 11'-0" |
| 12 @ 6" = 6'-0" | 12 @ 6" = 6'-0" |
| 6 @ 8" = 4'-0" | 6 @ 8" = 4'-0" |
| 6 @ 10" = 5'-0" | 6 @ 10" = 5'-0" |
| 6 @ 8" = 4'-0" | 6 @ 8" = 4'-0" |
| 12 @ 6" = 6'-0" | 12 @ 6" = 6'-0" |
| 30 @ 4" = 10'-0" | 33 @ 4" = 11'-0" |
| TOTAL = 45'-0" | TOTAL = 47'-0" |

SHEAR CONNECTOR SPACING

NOTES

1. SMALLEST PITCH IS @ CENTER OF BRG. INCREASING TO MAX. PITCH @ CENTER OF SPAN. BEGIN AND END PITCH OF SHEAR CONNECTORS @ CENTER OF BRG. THE SPACING SHOWN IS FOR STUDS AND CHANNELS.

2. SHEAR CONNECTORS PAYMENT IS BASED ON HEIGHT OF THE STUD CONNECTORS. CHANNEL CONNECTORS DEVELOPING THE SAME SHEAR AS THE STUDS MAY BE USED AS AN ALTERNATE.

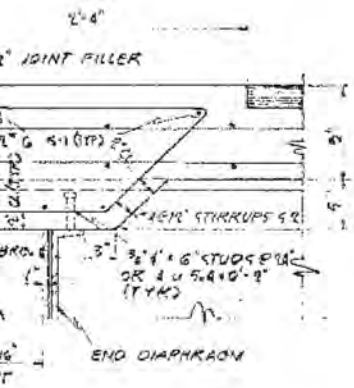


BEARINGS

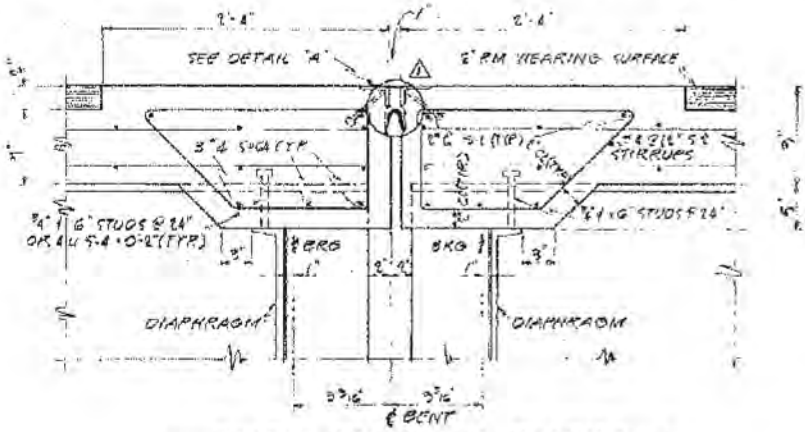


FIXED EXPANSION BEARING

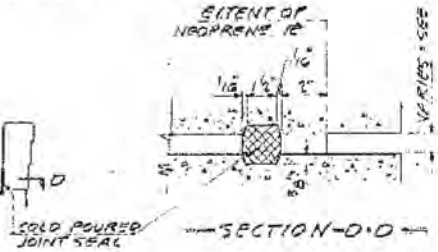


SECTION D-D

ON JOINT DETAIL AT CURBS

NOTE:

Elastomeric bearing areas (2" larger than Masonry (2)) shall be finished high and rubbed or ground to grade within ±1/16". No grouting.

| REVISIONS | | | |
|---|---|---|---|
| 2 | 5/8/ | 8 TO 53 ADD SURFACE CS @ DECK JOINTS | |
| 1 | 5/7/ | DATE | DESCRIPTION |

UTAH STATE DEPARTMENT OF HIGHWAYS
SALT LAKE CITY, UTAH
STRUCTURES DIVISION

LEHI — PROVO
AMERICAN FORK 3rd WEST OVERPASS
DETAILS

| | | |
|---|---|---|
| DESIGNED BY: S.E.R. | CHECKED BY: JNV | I-15-6(2)511 |
| DRAWN BY: R.E.C. Jr. | CHECKED BY: | PROJECT NUMBER |
| QUANTITIES BY: | CHECKED BY: | 253+15.493 |
| APPROVAL RECOMMENDED BY: | GROUP LEADER | STATION |
| APPROVED: | | UTAH |
| | | COUNTY |

B.M. NO.: DWG. NO.: C-345 | 11 of 14

**FOR INFORMATION ONLY**

# BILL OF REINFORCING

## SLABS

| MARK | SIZE | LGTH. | NO. REQ. | TOTAL LENGTH | TYPE | A | B | C | D | E | F | G | H | J | K | O |
|---|---|---|---|---|---|---|---|---|---|---|---|---|---|---|---|---|
| S-1 | 6 | 35'-0" | 24 | 840'-0" | 1 | | | | | | | | | | | |
| S-2 | 4 | 5'-3" | 336 | 1764'-0" | 24 | 1'-0" | 1'-9" | 3" | 1'-2" | 10" | | | | | | |
| S-3 | 6 | 1'-8" | 12 | 20'-0" | 1 | | | | | | | | | | | |
| S-4 | | 2'-6" | | 30'-0" | | | | | | | | | | | | |
| S-5 | | 3'-5" | | 41'-0" | | | | | | | | | | | | |
| S-6 | | 4'-3" | | 51'-0" | | | | | | | | | | | | |
| S-7 | | 5'-2" | | 62'-0" | | | | | | | | | | | | |
| S-8 | | 6'-1" | | 73'-0" | | | | | | | | | | | | |
| S-9 | | 7'-0" | | 84'-0" | | | | | | | | | | | | |
| S-10 | | 7'-10" | | 94'-0" | | | | | | | | | | | | |
| S-11 | | 8'-9" | | 105'-0" | | | | | | | | | | | | |
| S-12 | | 9'-7" | | 115'-0" | | | | | | | | | | | | |
| S-13 | | 10'-6" | | 126'-0" | | | | | | | | | | | | |
| S-14 | | 11'-4" | | 136'-0" | | | | | | | | | | | | |
| S-15 | | 12'-3" | | 147'-0" | | | | | | | | | | | | |
| S-16 | | 13'-2" | | 158'-0" | | | | | | | | | | | | |
| S-17 | | 14'-0" | | 168'-0" | | | | | | | | | | | | |
| S-18 | | 14'-11" | | 179'-0" | | | | | | | | | | | | |
| S-19 | | 15'-10" | | 190'-0" | | | | | | | | | | | | |
| S-20 | | 16'-8" | | 201'-0" | | | | | | | | | | | | |
| S-21 | | 17'-7" | | 211'-0" | | | | | | | | | | | | |
| S-22 | | 18'-6" | | 222'-0" | | | | | | | | | | | | |
| S-23 | | 19'-4" | | 232'-0" | | | | | | | | | | | | |
| S-24 | | 20'-3" | | 243'-0" | | | | | | | | | | | | |
| S-25 | | 21'-2" | | 254'-0" | | | | | | | | | | | | |
| S-26 | | 22'-0" | | 264'-0" | | | | | | | | | | | | |
| S-27 | | 22'-11" | | 275'-0" | | | | | | | | | | | | |
| S-28 | | 23'-9" | | 285'-0" | | | | | | | | | | | | |
| S-29 | | 24'-8" | | 296'-0" | | | | | | | | | | | | |
| S-30 | | 25'-7" | | 307'-0" | | | | | | | | | | | | |
| S-31 | | 26'-5" | | 317'-0" | | | | | | | | | | | | |
| S-32 | | 27'-4" | | 328'-0" | | | | | | | | | | | | |
| S-33 | | 28'-2" | | 338'-0" | | | | | | | | | | | | |
| S-34 | | 29'-1" | | 349'-0" | | | | | | | | | | | | |
| S-35 | | 29'-11" | | 359'-0" | | | | | | | | | | | | |
| S-36 | | 30'-10" | | 370'-0" | | | | | | | | | | | | |
| S-37 | | 31'-8" | | 380'-0" | | | | | | | | | | | | |
| S-38 | | 32'-7" | | 391'-0" | | | | | | | | | | | | |
| S-39 | | 33'-6" | | 402'-0" | | | | | | | | | | | | |
| S-40 | | 34'-4" | | 412'-0" | | | | | | | | | | | | |
| S-41 | | 35'-3" | | 423'-0" | | | | | | | | | | | | |
| S-42 | | 36'-1" | | 433'-0" | | | | | | | | | | | | |
| S-43 | | 37'-0" | | 444'-0" | | | | | | | | | | | | |
| S-44 | | 37'-11" | | 455'-0" | | | | | | | | | | | | |
| S-45 | | 38'-10" | | 466'-0" | | | | | | | | | | | | |
| S-46 | | 39'-9" | | 477'-0" | | | | | | | | | | | | |
| S-47 | | 40'-7" | | 487'-0" | | | | | | | | | | | | |
| S-48 | | 41'-6" | | 498'-0" | | | | | | | | | | | | |
| S-49 | | 42'-5" | | 509'-0" | | | | | | | | | | | | |
| S-50 | | 43'-3" | | 519'-0" | | | | | | | | | | | | |
| S-51 | | 44'-2" | | 530'-0" | | | | | | | | | | | | |
| S-52 | | 45'-0" | | 540'-0" | | | | | | | | | | | | |
| S-53 | | 45'-11" | | 551'-0" | | | | | | | | | | | | |
| S-54 | | 46'-9" | | 561'-0" | | | | | | | | | | | | |
| S-55 | | 47'-8" | | 572'-0" | | | | | | | | | | | | |
| S-56 | | 48'-6" | | 582'-0" | | | | | | | | | | | | |
| S-57 | | 49'-5" | | 593'-0" | | | | | | | | | | | | |
| S-58 | | 50'-3" | | 603'-0" | | | | | | | | | | | | |
| S-59 | | 51'-2" | | 614'-0" | | | | | | | | | | | | |
| S-60 | | 52'-1" | | 625'-0" | | | | | | | | | | | | |
| S-61 | | 53'-0" | | 636'-0" | | | | | | | | | | | | |
| S-62 | | 53'-10" | 12 | 646'-0" | | | | | | | | | | | | |
| S-63 | 6 | 54'-9" | 62 | 3388'-6" | 1 | | | | | | | | | | | |
| S-64 | 4 | 8'-4" | 126 | 1050'-0" | 1 | | | | | | | | | | | |
| S-65 | 4 | 46'-6" | 202 | 9393'-0" | 1 | | | | | | | | | | | |
| S-66 | 4 | 48'-7" | 101 | 4906'-11" | 1 | | | | | | | | | | | |

## CURB & PARAPET

| MARK | SIZE | LGTH. | NO. REQ. | TOTAL LENGTH | TYPE | A | B | C | D | E | F | G | H | J | K | O |
|---|---|---|---|---|---|---|---|---|---|---|---|---|---|---|---|---|
| DC-1 | 5 | 7'-9" | 230 | 1792'-6" | 22 | | 1'-0" | 2'-10½" | 9½" | 1'-7½" | | | 36" | | | |
| DC-2 | 5 | 3'-1" | 230 | 709'-2" | 21 | | 1'-4½" | 1'-8½" | | | | | 12 | | 12 | |
| DC-3 | 4 | 46'-6" | 28 | 1302'-0" | 1 | | | | | | | | | | | |
| DC-4 | 4 | 48'-4" | 14 | 676'-8" | 1 | | | | | | | | | | | |

## APPROACH SLABS

| MARK | SIZE | LGTH. | NO. REQ. | TOTAL LENGTH | TYPE | A | B | C | D | E |
|---|---|---|---|---|---|---|---|---|---|---|
| AS-1 | 7 | 14'-8" | 142 | 2082'-8" | 1 | | | | | |
| AS-2 | 4 | 33'-7" | 104 | 3492'-8" | 1 | | | | | |
| AS-3 | 4 | 17'-8" | 106 | 1872'-8" | 25 | 14'-8" | 10" | 8" | 8" | 10" |
| AS-4 | 7 | 34'-0" | 12 | 408'-0" | 1 | | | | | |
| AS-5 | 4 | 2'-0" | 66 | 132'-0" | 1 | | | | | |
| AS-6 | | 2'-8" | | 26'-0" | | | | | | |
| AS-7 | | 2'-5" | | 29'-8" | | | | | | |
| AS-8 | | 2'-3" | | 33'-0" | | | | | | |
| AS-9 | | 2'-2" | | 36'-8" | | | | | | |
| AS-10 | | 2'-1" | | 40'-4" | | | | | | |
| AS-11 | | 2'-11" | | 43'-8" | | | | | | |
| AS-12 | | 2'-10" | | 47'-4" | | | | | | |
| AS-13 | | 2'-8" | | 50'-8" | | | | | | |
| AS-14 | 7 | 13'-7" | 4 | 54'-4" | | | | | | |
| AS-15 | 7 | 14'-6" | 164 | 2378'-8" | | | | | | |
| AS-16 | 3 | 2'-6" | 4 | 10'-0" | | | | | | |
| AS-17 | | 3'-3" | | 13'-4" | | | | | | |
| AS-18 | | 3'-2" | | 20'-8" | | | | | | |
| AS-19 | | 2'-11" | | 26'-0" | | | | | | |
| AS-20 | | 2'-10" | | 31'-4" | | | | | | |
| AS-21 | | 2'-9" | | 36'-8" | | | | | | |
| AS-22 | | 2'-8" | | 42'-0" | | | | | | |
| AS-23 | | 2'-10" | | 47'-4" | | | | | | |
| AS-24 | | 2'-9" | | 52'-4" | | | | | | |
| AS-25 | | 15'-6" | 10 | 159'-0" | | | | | | |
| AS-26 | | 18'-2" | 8 | 145'-4" | | | | | | |
| AS-27 | | 26'-4" | 54 | 1426'-0" | | | | | | |
| AS-28 | 5 | 40'-0" | 64 | 2560'-0" | | | | | | |

## BENTS

| MARK | SIZE | LGTH. | NO. REQ. | TOTAL LENGTH | TYPE | A | B | C | D | E |
|---|---|---|---|---|---|---|---|---|---|---|
| B-1 | 8 | 19'-6" | 50 | 975'-0" | 1 | | | | | |
| B-2 | | 16'-0" | 20 | 320'-0" | 1 | | | | | |
| B-3 | | 18'-0" | 10 | 180'-0" | 4 | | 2'-2½" | 16'-0" | | |
| B-4 | | 18'-8" | 10 | 188'-0" | 4 | | 2'-10½" | 16'-0" | | |
| B-5 | 8 | 7'-6" | 40 | 300'-0" | 6 | | 3'-0" | 4'-6" | 3½" | 12 |
| B-6 | 5 | 24'-9" | 16 | 396'-0" | 1 | | | | | |
| B-7 | 5 | 19'-6" | 8 | 156'-0" | 1 | | | | | |
| B-8 | 5 | 3'-3" | 48 | 156'-0" | 1 | | | | | |
| B-9 | 4 | 13'-6" | 2 | 27'-0" | 12 | 5 | 3'-5" | 3'-1" | 3'-5" | 3'-1" |
| B-10 | | 14'-10" | 2 | 29'-8" | 1 | | | 3'-9" | | 3'-9" |
| B-11 | | 16'-0" | 2 | 32'-0" | | | | 4'-4" | | 4'-4" |
| B-12 | | 14'-8" | 43 | 632'-0" | | | | 3'-8" | | 3'-8" |
| B-13 | | 14'-6" | 2 | 29'-0" | | | | 3'-7" | | 3'-7" |
| B-14 | | 13'-4" | 2 | 26'-8" | | | | 3'-0" | | 3'-0" |
| B-15 | 4 | 12'-0" | 2 | 24'-0" | 12 | 5 | 3'-5" | 2'-4" | 3'-5" | 2'-4" |

## BENT COLUMNS

| MARK | SIZE | LGTH. | NO. REQ. | TOTAL LENGTH | TYPE | A | B | C | D | E |
|---|---|---|---|---|---|---|---|---|---|---|
| BC-1 | 9 | 19'-6" | 128 | 2328'-0" | 4 | | 1'-0" | 19'-0" | | |
| BC-2 | 3 | 11'-4" | 128 | 1418'-8" | 12 | 4" | 2'-8" | 2'-8" | 2'-8" | 2'-8" |
| BC-3 | 3 | 7'-11" | 128 | 1013'-4" | 12 | 4" | 1'-10½" | 1'-10½" | 1'-10½" | 1'-10½" |

## BENT FOOTINGS

| MARK | SIZE | LGTH. | NO. REQ. | TOTAL LENGTH | TYPE | A | B | C | D | E |
|---|---|---|---|---|---|---|---|---|---|---|
| BF-1 | 9 | 7'-6" | 128 | 960'-0" | 4 | | 6'-3" | 1'-6" | | |
| BF-2 | 8 | 22'-9" | 40 | 910'-0" | 1 | | | | | |
| BF-3 | 8 | 19'-6" | 20 | 390'-0" | 1 | | | | | |
| BF-4 | 8 | 14'-0" | 16 | 224'-0" | 1 | | | | | |
| BF-5 | 8 | 37'-0" | 26 | 962'-0" | 1 | | | | | |
| BF-6 | 6 | 5'-6" | 82 | 451'-0" | 1 | | | | | |

DGN Files 1PLPlaDesa\16721\4433.C-045-12-Foundation
02-MAY-2005

# STEEL

| F | G | H | J | K | O | MARK | SIZE | LGTH. | NO. REQ. | TOTAL LENGTH | TYPE | A | B | C | D | E | F | G | H | J | K | O |
|---|---|---|---|---|---|---|---|---|---|---|---|---|---|---|---|---|---|---|---|---|---|---|

Note:
All steel on this sheet is for North Bound structure, and is identical to South Bound structure. Double the amount for two structures.

| FED. ROAD DIST. NO. | STATE | FED. AID PROJ. NO. | FISCAL YEAR | SHEET NO. | TOTAL SHEETS |
|---|---|---|---|---|---|
| 9T | UTAH | | POST WAR | | |

## BAR TYPES

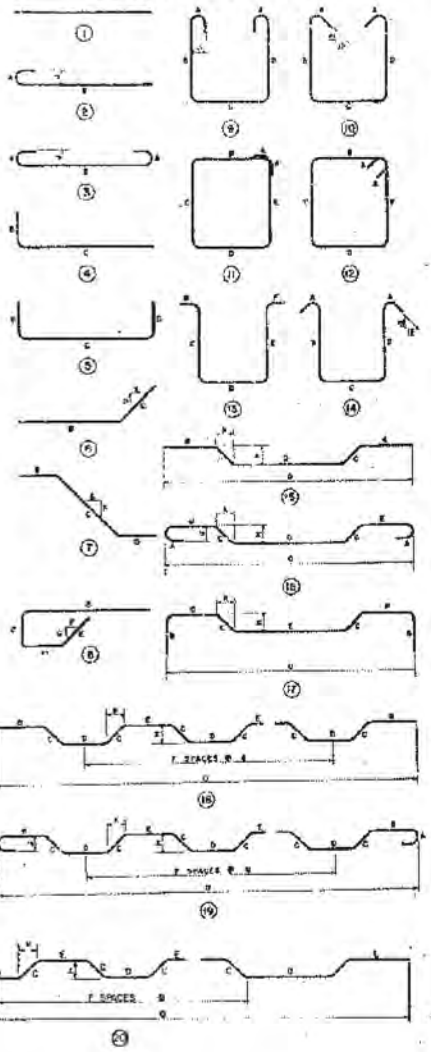

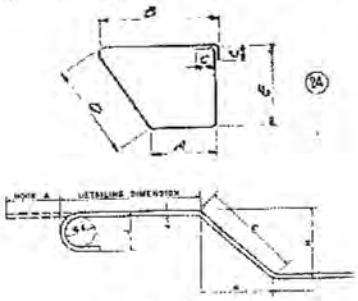

## HOOK DETAIL

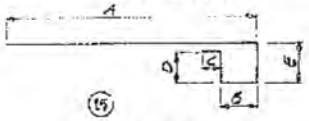

## GENERAL NOTES

1. All placing drawings, detailing, and fabrication shall be in accordance with the "Manual of Standard Practice for Detailing Reinforced Concrete Structures (ACI 315-57)".
2. All dimensions shown for bar bending details are out-to-out of bars.

REGISTERED PROFESSIONAL ENGINEER NO. 2164 F. R. NEWVILLE STATE OF UTAH

DESIGN AND DRAWING BY
WESTERN ENGINEERS, INC. AND
EDWARDS AND KELCEY
CONSULTING ENGINEERS

SUBMITTED BY F. R. Newville CHIEF ENGINEER
UTAH P. E. REG. NO. 2164

SHEET 12 OF 14 SHEETS

UTAH STATE ROAD COMMISSION
SALT LAKE CITY, UTAH
BRIDGE DEPARTMENT

AMERICAN FORK 3RD WEST OVERPASS
46'-5 1/8" O TO O 127° KING ∠
STA. 253+15.493 I-15-6(63)211
LEHI - PROVO UTAH COUNTY

DESIGNED BY B.E. SCALE
DRAWN BY D.R. ISSUED May 22, 1961
TRACED BY APPROVED S.L. Sorensen
CHECKED BY B.E. STATE BRIDGE ENGINEER

DWG. NO. C-345

STRUCTURE I-L

**FOR INFORMATION ONLY**

# BILL OF REINFORCIN

| MARK | SIZE | LGTH. | NO. REQ. | TOTAL LENGTH | TYPE | A | B | C | D | E | F | G | H | J | K | G |
|---|---|---|---|---|---|---|---|---|---|---|---|---|---|---|---|---|
| **ABUTMENT NO. 1 NORTH BOUND** | | | | | | | | | | | | | | | | |
| **FOOTING** | | | | | | | | | | | | | | | | |
| 1AF1 | #8 | 40'-0" | 10 | 400'-0" | 1 | | | | | | | | | | | |
| 1AF2 | #8 | 32'-4" | 10 | 323'-4" | 1 | | | | | | | | | | | |
| 1AF3 | #8 | 15'-0" | 9 | 135'-0" | 1 | | | | | | | | | | | |
| 1AF4 | #8 | 5'-9" | 9 | 51'-9" | 1 | | | | | | | | | | | |
| 1AF5 | #5 | 4'-0" | 69 | 276'-0" | 4 | | 6" | 3'-1" | | | | | | | | |
| 1AF6 | #5 | 3'-6" | 69 | 241'-6" | 4 | | 6" | 3'-1" | | | | | | | | |
| 1AF7 | #5 | 3'-3" | 42 | 136'-6" | 4 | | 6" | 2'-10" | | | | | | | | |
| 1AF8 | #4 | 45'-0" | 2 | 90'-0" | 1 | | | | | | | | | | | |
| 1AF9 | | 32'-8" | 2 | 64'-8" | 1 | | | | | | | | | | | |
| 1AF10 | | 15'-2" | 2 | 30'-5" | 1 | | | | | | | | | | | |
| 1AF11 | | 5'-3" | 2 | 11'-6" | 1 | | | | | | | | | | | |
| 1AF12 | #4 | 12'-5" | 46 | 571'-2" | 12 | 5" | 4'-6" | 1'-6" | 4'-6" | 1'-6" | | | | | | |
| **ABUTMENT** | | | | | | | | | | | | | | | | |
| 1A2 | #5 | 40'-0" | 18 | 720'-0" | 1 | | | | | | | | | | | |
| 1A3 | | 31'-9" | 18 | 571'-6" | 1 | | | | | | | | | | | |
| 1A4 | | 5'-3" | 68 | 358'-4" | 1 | | | | | | | | | | | |
| 1A5 | | 5'-9" | 68 | 391'-0" | 4 | | 2'-3" | 3'-7" | | | | | | | | |
| 1A6 | | 3'-7" | 68 | 243'-8" | 1 | | | | | | | | | | | |
| 1A7 | #5 | 2'-2" | 24 | 52'-0" | 1 | | | | | | | | | | | |
| **WING WALL 1-N (SOUTH WALL)** | | | | | | | | | | | | | | | | |
| 1AW7 | #5 | 4'-1" | 2 | 8'-2" | 1 | | | | | | | | | | | |
| 1AW8 | | 3'-7" | | 7'-2" | | | | | | | | | | | | |
| 1AW9 | | 3'-1" | | 6'-2" | | | | | | | | | | | | |
| 1AW10 | | 2'-7" | | 5'-2" | | | | | | | | | | | | |
| 1AW11 | | 2'-1" | 2 | 4'-2" | | | | | | | | | | | | |
| 1AW18 | | 15'-10" | 4 | 63'-4" | | | | | | | | | | | | |
| 1AW19 | | 13'-9½" | 2 | 27'-7" | | | | | | | | | | | | |
| 1AW20 | | 14'-5½" | 2 | 28'-11" | | | | | | | | | | | | |
| 1AW21 | | 13'-6" | 6 | 81'-0" | | | | | | | | | | | | |
| 1AW22 | | 4'-4" | 3 | 13'-0" | | | | | | | | | | | | |
| 1AW23 | | 7'-9" | 24 | 186'-0" | | | | | | | | | | | | |
| 1AW34 | #5 | 5'-7" | 2 | 11'-2" | 1 | | | | | | | | | | | |
| DC2 | #5 | 3'-1" | 14 | 43'-2" | 21 | | 1'-4½" | 1'-8½" | | | | 12" | | | 12" | |
| DC5 | #5 | 6'-0" | 12 | 72'-0" | 22 | | | 2'-10½" | 3½" | 5'-1½" | | | 3½" | | | |
| DC6 | #5 | 5'-7" | 1 | 5'-7" | 22 | | | 2'-8½" | 6" | 2'-5½" | | | 3½" | | | |
| DC7 | #5 | 4'-10" | 1 | 4'-10" | 22 | | | 2'-5½" | 5" | 2'-2½" | | | 3½" | | | |
| DC14 | #4 | 15'-10" | 2 | 31'-8" | 1 | | | | | | | | | | | |
| DC15 | #4 | 16'-6" | 2 | 33'-0" | 1 | | | | | | | | | | | |
| DC16 | #4 | 15'-3" | 4 | 61'-0" | 1 | | | | | | | | | | | |
| **WING WALL 1-N (NORTH WALL)** | | | | | | | | | | | | | | | | |
| 1AW7 | Thru | 1AW11 | Same as | 1N (SOUTH WALL) | | | | | | | | | | | | |
| 1AW24 | #5 | 8'-1" | 4 | 32'-4" | 1 | | | | | | | | | | | |
| 1AW25 | | 6'-0½" | 2 | 12'-1" | | | | | | | | | | | | |
| 1AW26 | | 6'-0½" | 2 | 12'-1" | | | | | | | | | | | | |
| 1AW27 | | 5'-9" | 6 | 34'-6" | | | | | | | | | | | | |
| 1AW28 | | 5'-6" | 3 | 16'-6" | | | | | | | | | | | | |
| 1AW29 | | 6'-10" | 11 | 75'-2" | | | | | | | | | | | | |
| 1AW34 | #5 | 5'-7" | 2 | 11'-2" | 1 | | | | | | | | | | | |
| DC2 | #5 | 3'-1" | 7 | 21'-7" | 21 | | 1'-4½" | 1'-8½" | | | | 12" | | | 12" | |
| DC5 | #5 | 6'-0" | 5 | 30'-0" | 22 | | | 2'-10½" | 3½" | 5'-1½" | | | 3½" | | | |
| DC6 & DC7 | Same as 1N (SOUTH WALL) | | | | | | | | | | | | | | | |
| DC17 | #4 | 7'-4" | 2 | 14'-8" | 1 | | | | | | | | | | | |
| DC18 | #4 | 8'-0" | 2 | 16'-0" | 1 | | | | | | | | | | | |
| DC19 | #4 | 6'-10" | 4 | 27'-4" | 1 | | | | | | | | | | | |
| **ABUTMENT NO. 1 SOUTH BOUND** | | | | | | | | | | | | | | | | |
| **FOOTING** | | | | | | | | | | | | | | | | |
| 1AF1 | #8 | 40'-0" | 10 | 400'-0" | 1 | | | | | | | | | | | |
| 1AF2 | #8 | 32'-4" | 10 | 323'-4" | 1 | | | | | | | | | | | |
| 1AF3 | #8 | 5'-9" | 37 | 185'-3" | 4 | | 6" | 2'-11" | | | | | | | | |
| 1AF4 | #5 | 40'-0" | 9 | 180'-0" | 1 | | | | | | | | | | | |
| 1AF5 | #5 | 32'-4" | 2 | 64'-8" | 1 | | | | | | | | | | | |
| 1AF12 | #4 | 12'-5" | 55 | 682'-11" | 12 | 5" | 4'-6" | 1'-6" | 4'-6" | 1'-6" | | | | | | |
| 1AF13 | #4 | 14'-0" | 9 | 126'-0" | 1 | | | | | | | | | | | |

| MARK | SIZE | LGTH. | NO. REQ. | TOTAL LENGTH | TYPE | A | B | C | D |
|---|---|---|---|---|---|---|---|---|---|
| **(ABUTMENT FOOTING CONT.)** | | | | | | | | | |
| 1AF14 | #8 | 14'-0" | 9 | 126'-0" | 1 | | | | |
| 1AF15 | #5 | 4'-8" | 69 | 299'-0" | 4 | | 6" | 3'-11" | |
| 1AF16 | #5 | 3'-10" | 69 | 264'-6" | 4 | | 6" | 3'-5" | |
| 1AF17 | #4 | 17'-0" | 2 | 34'-3" | 1 | | | | |
| 1AF18 | #4 | 14'-0" | 2 | 28'-0" | 1 | | | | |
| **ABUTME** | | | | | | | | | |
| Same as ABUTMENT NO. 1 NORTH BOUND | | | | | | | | | |
| **WING WALL 1-S** | | | | | | | | | |
| 1AW1 | #5 | 17'-10" | 4 | 71'-8" | 1 | | | | |
| 1AW2 | | 15'-9½" | 2 | 31'-7" | | | | | |
| 1AW3 | | 16'-5½" | 2 | 32'-11" | | | | | |
| 1AW4 | | 15'-6" | 8 | 124'-0" | | | | | |
| 1AW5 | | 4'-4" | 3 | 13'-0" | | | | | |
| 1AW6 | | 6'-7" | 28 | 184'-8" | 1 | | | | |
| 1AW7 | Thru | 1AW11 | Same as | 1N (SOUTH WALL | | | | | |
| 1AW34 | #5 | 5'-7" | 2 | 11'-2" | 1 | | | | |
| DC2 | #5 | 3'-1" | 15 | 46'-3" | 21 | | 1'-4½" | 1'-8½" | |
| DC5 | #5 | 6'-0" | 18 | 78'-0" | 22 | | | 2'-10½" | 3½" 2 |
| DC6 & DC7 | Same as 1N (SOUTH WALL) | | | | | | | | |
| DC8 | #4 | 17'-8" | 2 | 35'-4" | 1 | | | | |
| DC9 | #4 | 16'-8" | 3 | 50'-0" | 1 | | | | |
| DC10 | #4 | 16'-9" | 4 | 67'-0" | 1 | | | | |
| **WING WALL 1-S** | | | | | | | | | |
| 1AW7 | Thru | 1AW11 | Same as | 1N (SOUTH WALL) | | | | | |
| 1AW12 | #5 | 17'-1" | 4 | 68'-4" | 1 | | | | |
| 1AW13 | | 15'-0½" | 2 | 30'-1" | | | | | |
| 1AW14 | | 15'-8½" | 2 | 31'-5" | | | | | |
| 1AW15 | | 14'-9" | 10 | 147'-6" | | | | | |
| 1AW16 | | 5'-8" | 3 | 17'-0" | | | | | |
| 1AW17 | | 8'-1" | 27 | 218'-3" | | | | | |
| 1AW34 | #5 | 5'-7" | 2 | 11'-2" | 1 | | | | |
| DC2 | #5 | 3'-1" | 14 | 43'-2" | 21 | | 1'-4½" | 1'-8½" | |
| DC5 | #5 | 6'-0" | 12 | 72'-0" | 22 | | | 2'-10½" | 3½" 2 |
| DC6 & DC7 | Same as 1N (SOUTH WALL) | | | | | | | | |
| DC11 | #4 | 16'-1" | 3 | 48'-3" | 1 | | | | |
| DC12 | #4 | 16'-9" | 2 | 33'-6" | 1 | | | | |
| DC13 | #4 | 16'-6" | 4 | 66'-0" | 1 | | | | |
| **ABUTMENT NO. 4** | | | | | | | | | |
| **FOOTI** | | | | | | | | | |
| 4AF1 | #8 | 40'-0" | 10 | 400'-0" | 1 | | | | |
| 4AF2 | #8 | 32'-4" | 10 | 323'-4" | 1 | | | | |
| 4AF3 | #8 | 13'-0" | 9 | 117'-0" | 1 | | | | |
| 4AF4 | #8 | 11'-0" | 9 | 99'-0" | 1 | | | | |
| 4AF5 | #5 | 4'-2" | 69 | 287'-6" | 4 | | 6" | 3'-9" | |
| 4AF6 | #5 | 3'-9" | 69 | 258'-9" | 4 | | 6" | 3'-3" | |
| 4AF7 | #5 | 3'-3" | 44 | 143'-0" | 4 | | 6" | 2'-10" | |
| 4AF8 | #4 | 40'-0" | 2 | 80'-0" | 1 | | | | |
| 4AF9 | | 32'-8" | 2 | 64'-8" | 1 | | | | |
| 4AF10 | | 13'-0" | 2 | 26'-0" | 1 | | | | |
| 4AF11 | | 11'-0" | 2 | 22'-0" | 1 | | | | |
| 4AF12 | #4 | 12'-5" | 48 | 596'-0" | 12 | 5" | 4'-6" | 1'-6" | 3'-6" |
| **ABUTME** | | | | | | | | | |
| 4A2 | #5 | 40'-0" | 18 | 720'-0" | 1 | | | | |
| 4A3 | | 31'-9" | 18 | 571'-6" | 1 | | | | |
| 4A4 | | 4'-0" | 68 | 272'-0" | 1 | | | | |
| 4A5 | | 4'-4" | 68 | 294'-8" | 1 | | | | |
| 4A6 | | 5'-7" | 68 | 379'-8" | 1 | | | | |
| 4A7 | #5 | 2'-2" | 24 | 52'-0" | 1 | | | | |
| **WING WALL 4-** | | | | | | | | | |
| 4AW1 | Thru | 4AW3 | Same as | 4S (SOUTH WALL) | | | | | |
| 4AW4 | #4 | 11'-9" | 10 | 117'-6" | 1 | | | | |
| 4AW5 | Thru | 4AW11 | Same as | 4S (SOUTH WALL) | | | | | |

PENNSYLVANIA CO

G STEEL

| E | F | G | H | J | K | O |
|---|---|---|---|---|---|---|
| NT | | | | | | |
| (SOUTH WALL) | | | | | | |
| ) | | | | | | |
| | | | 12" | | 12" | |
| 2/6 | | | 3½" | | | |
| (NORTH WALL) | | | | | | |
| NORTH BOUND | | | | | | |
| NG | | | | | | |
| | | | 12" | | 12" | |
| 1/6 | | | 3½" | | | |
| -6" | | | | | | |
| NT | | | | | | |
| N (SOUTH WALL) | | | | | | |

| MARK | SIZE | LGTH. | NO. REQ. | TOTAL LENGTH | TYPE | A | B | C | D | E | F | G | H | J | K | O |
|---|---|---|---|---|---|---|---|---|---|---|---|---|---|---|---|---|
| 4AW15 | #5 | 3'-2" | 3 | 9'-6" | 1 | | | | | | | | | | | |
| 4AW19 | #5 | 6'-5" | 21 | 136'-9" | 1 | | | | | | | | | | | |
| 4AW36 | #5 | 5'-7" | 2 | 11'-2" | 1 | | | | | | | | | | | |
| DC2 | Thru | DC22 | Same as 4S (SOUTH WALL) | | | | | | | | | | | | | |
| **WING WALL 4-N (NORTH WALL)** | | | | | | | | | | | | | | | | |
| 4AW7 | Thru | 4AW11 | Same as 4S (NORTH WALL) | | | | | | | | | | | | | |
| 4AW12 | Thru | 4AW14 | Same as 4S (NORTH WALL) | | | | | | | | | | | | | |
| 4AW15 | #5 | 12'-6" | 4 | 50'-0" | 1 | | | | | | | | | | | |
| 4AW20 | #5 | 6'-1" | 3 | 6'-3" | 1 | | | | | | | | | | | |
| 4AW21 | #5 | 5'-4" | 11 | 58'-8" | 1 | | | | | | | | | | | |
| 4AW34 | #5 | 5'-7" | 2 | 11'-2" | 1 | | | | | | | | | | | |
| DC2 | Thru | DC25 | Same as 4S (NORTH WALL) | | | | | | | | | | | | | |
| **ABUTMENT NO. 4 SOUTH BOUND** | | | | | | | | | | | | | | | | |
| **FOOTING** | | | | | | | | | | | | | | | | |
| Same as ABUTMENT NO. 4 NORTH BOUND | | | | | | | | | | | | | | | | |
| **ABUTMENT** | | | | | | | | | | | | | | | | |
| 4A2 | #5 | 40'-0" | 10 | 720'-0" | 1 | | | | | | | | | | | |
| 4A3 | | 31'-9" | 18 | 571'-6" | | | | | | | | | | | | |
| 4A6 | | 3'-7" | 68 | 243'-8" | | | | | | | | | | | | |
| 4A7 | | 2'-8" | 26 | 52'-0" | | | | | | | | | | | | |
| 4A8 | | 5'-6" | 68 | 374'-0" | 1 | | | | | | | | | | | |
| 4A9 | #5 | 5'-11" | 68 | 402'-4" | 4 | | 2'-3" | 3'-9" | | | | | | | | |
| **WING WALL 4-S (SOUTH WALL)** | | | | | | | | | | | | | | | | |
| 4AW1 | #5 | 14'-0" | 4 | 56'-0" | 1 | | | | | | | | | | | |
| 4AW2 | | 12'-0" | 2 | 24'-0" | | | | | | | | | | | | |
| 4AW3 | | 12'-8" | 2 | 25'-4" | | | | | | | | | | | | |
| 4AW4 | | 11'-9" | 6 | 70'-6" | | | | | | | | | | | | |
| 4AW5 | | 3'-7" | 3 | 10'-9" | | | | | | | | | | | | |
| 4AW6 | | 7'-0" | 19 | 133'-0" | | | | | | | | | | | | |
| 4AW7 | | 4'-1" | 2 | 8'-2" | | | | | | | | | | | | |
| 4AW8 | | 3'-7" | | 7'-2" | | | | | | | | | | | | |
| 4AW9 | | 3'-1" | | 6'-2" | | | | | | | | | | | | |
| 4AW10 | | 2'-1" | | 5'-2" | | | | | | | | | | | | |
| 4AW11 | | 2'-1" | | 4'-2" | | | | | | | | | | | | |
| 4AW34 | #5 | 5'-7" | 2 | 11'-2" | 1 | | | | | | | | | | | |

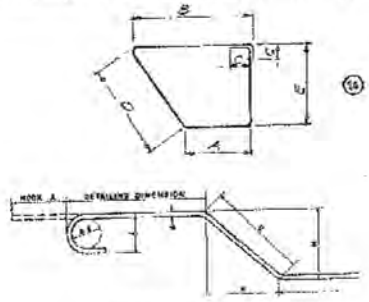

HOOK DETAIL

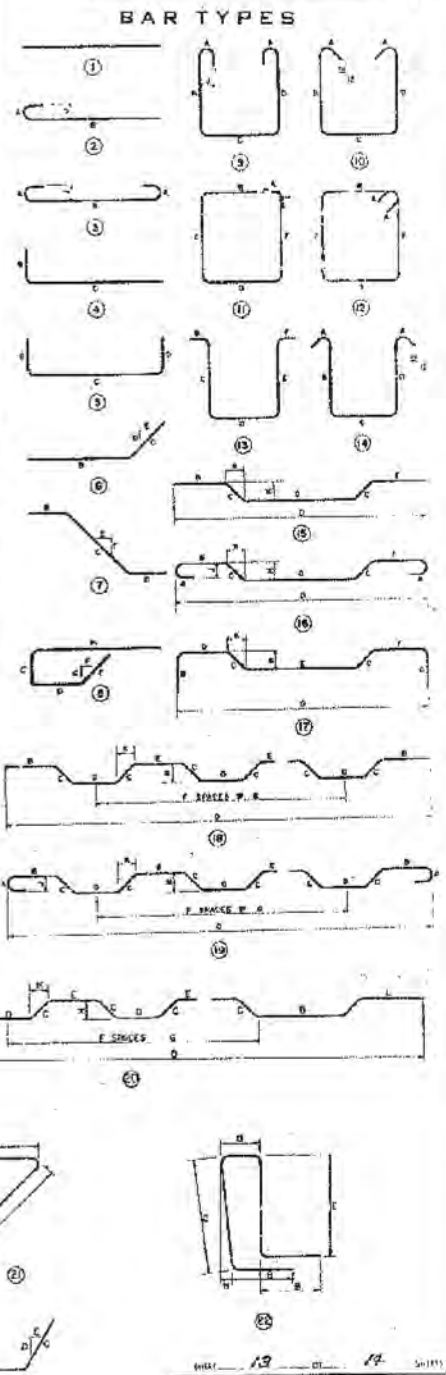


GENERAL NOTES

1. All placing drawings, detailing, and fabrication shall be in accordance with the "Manual of Standard Practice for Detailing Reinforced Concrete Structures (ACI 315-57)".
2. All dimensions shown for bar bending details are out to-out of bars.

REGISTERED PROFESSIONAL ENGINEER NO. 2164 L. R. REWVILLE STATE OF UTAH

DESIGN AND DRAWING BY
WESTERN ENGINEERS, INC. AND
EDWARDS AND KELCEY
CONSULTING ENGINEERS

SUBMITTED BY L. R. Rewville CHIEF ENGINEER
UTAH ENGR. LIC. NO. 2164

UTAH STATE ROAD COMMISSION
SALT LAKE CITY, UTAH
BRIDGE DEPARTMENT

AMERICAN FORK 3RD WEST OVERPASS
146'-5½" O TO O 127" XING ∠
STA 253+13.493 ∠ 15 (SKEW)
LEHI-PROVO UTAH COUNTY

DESIGNED BY ____ SCALE ____
DRAWN BY ____ ISSUED May 22, 1961
TRACED BY ____ APPROVED D. L. Sargent
CHECKED BY ____ CHIEF ENGINEER

DRG. NO. C-345

STRUCTURE 1-1

**FOR INFORMATION ONLY**

# BILL OF REINFORCIN

| MARK | SIZE | LGTH. | NO. REQ. | TOTAL LENGTH | TYPE | A | B | C | D | E | F | G | H | J | K | O |
|---|---|---|---|---|---|---|---|---|---|---|---|---|---|---|---|---|
| **(ABUTMENT NO. 4 SOUTH BOUND WING WALL CONT.)** | | | | | | | | | | | | | | | | |
| DC-2 | 3 | 3'-1" | 12 | 37'-0" | 21 | | 1'-2½ | 1'-8½ | | | | | 12 | | 12 | |
| DC-5 | 5 | 6'-0" | 10 | 60'-0" | 22 | | | 2'-10½ | 0'-3½ | 2'-7½ | | | 3½ | | | |
| DC-6 | 5 | 5'-7" | 1 | 5'-7" | 22 | | | 2'-3½ | 0'-5" | 2'-5½ | | | 3½ | | | |
| DC-7 | 5 | 4'-10" | 1 | 4'-10" | 22 | | | 2'-5½ | 0'-5" | 2'-2½ | | | 3½ | | | |
| DC-20 | 4 | 12'-7" | 3 | 37'-9" | 1 | | | | | | | | | | | |
| DC-21 | 4 | 12'-11" | 2 | 25'-10" | 1 | | | | | | | | | | | |
| DC-22 | 4 | 12'-8" | 4 | 50'-8" | 1 | | | | | | | | | | | |
| **WING WALL 4S (NORTH WALL)** | | | | | | | | | | | | | | | | |
| 4AW-7 | Hrs | 4AW11 | same as | South Wall | | | | | | | | | | | | |
| 4AW-12 | 5 | 12'-10" | 2 | 59'-4" | 1 | | | | | | | | | | | |
| 4AW-13 | 1 | 12'-9½" | 2 | 25'-7" | 1 | | | | | | | | | | | |
| 4AW-14 | | 13'-5½" | 2 | 26'-11" | | | | | | | | | | | | |
| 4AW-15 | | 12'-6 | 8 | 100'-0" | | | | | | | | | | | | |
| 4AW-16 | | 6'-8 | 3 | 18'-0" | | | | | | | | | | | | |
| 4AW-17 | 1 | 8'-0" | 22 | 176'-0" | 1 | | | | | | | | | | | |
| 4AW-34 | 5 | 5'-7" | 2 | 11'-2" | 1 | | | | | | | | | | | |
| DC-2 | 5 | 3'-1" | 13 | 40'-1" | 21 | | 1'-4½ | 1'-8½ | | | | | 12 | | 12 | |
| DC-5 | 5 | 6'-0" | 11 | 66'-0" | 22 | | | 2'-10½ | 0'-9½" | 2'-7½ | | | 3½ | | | |
| DC-6 & DC-7 | same as | South Wall | | | | | | | | | | | | | | |
| DC-23 | 4 | 14'-8" | 2 | 29'-4" | 1 | | | | | | | | | | | |
| DC-24 | 4 | 14'-0" | 3 | 42'-0" | 1 | | | | | | | | | | | |
| DC-25 | 4 | 13'-9" | 4 | 55'-0" | 1 | | | | | | | | | | | |
| **ABUTMENT NO. 1 FILLETS** | | | | | | | | | | | | | | | | |
| **WING WALL NO 1 NORTH** | | | | | | | | | | | | | | | | |
| AW-30 | 5 | 7'-10" | 5 | 39'-2" | 23 | | 4'-11" | 1'-6" | 1 | 2 | | | 1 | | 2 | |
| AW-31 | 5 | 8'-5" | 5 | 42'-1" | 23 | | 5'-6" | 1'-6" | 1 | 2 | | | 1 | | 2 | |
| AW-32 | 5 | 5'-0" | 5 | 25'-0" | 23 | | 2'-1" | 1'-6" | 1 | 2 | | | 1 | | 2 | |
| AW-33 | 5 | 5'-2" | 5 | 25'-10" | 23 | | 2'-3½ | 1'-6" | 1 | 2 | | | 1 | | 2 | |
| **WING WALL NO. 1 SOUTH** | | | | | | | | | | | | | | | | |
| AW-30 | 5 | 7'-10" | 6 | 47'-0" | 23 | | 4'-11" | 1'-6" | 1 | 2 | | | 1 | | 2 | |
| AW-31 | 5 | 8'-5" | 6 | 50'-6" | 23 | | 5'-6" | 1'-6" | 1 | 2 | | | 1 | | 2 | |
| AW-32 | 5 | 5'-0" | 7 | 35'-0" | 23 | | 2'-1" | 1'-6" | 1 | 2 | | | 1 | | 2 | |
| AW-33 | 5 | 5'-2" | 7 | 36'-2" | 23 | | 2'-3½ | 1'-6" | 1 | 2 | | | 1 | | 2 | |
| **ABUTMENT NO. 4 FILLETS** | | | | | | | | | | | | | | | | |
| **WING WALL NO. 4 SOUTH** | | | | | | | | | | | | | | | | |
| AW-30 | 5 | 7'-10" | 6 | 47'-0" | 23 | | 4'-11" | 1'-6" | 1 | 2 | | | 1 | | 2 | |
| AW-31 | 5 | 8'-5" | 6 | 50'-6" | 23 | | 5'-6" | 1'-6" | 1 | 2 | | | 1 | | 2 | |
| AW-32 | 5 | 5'-0" | 5 | 25'-0" | 23 | | 2'-1" | 1'-6" | 1 | 2 | | | 1 | | 2 | |
| AW-33 | 5 | 5'-2" | 5 | 25'-10" | 23 | | 2'-3½ | 1'-6" | 1 | 2 | | | 1 | | 2 | |
| **WING WALL NO. 4 NORTH** | | | | | | | | | | | | | | | | |
| AW-30 | 5 | 7'-10" | 5 | 39'-2" | 23 | | 4'-11" | 1'-6" | 1 | 2 | | | 1 | | 2 | |
| AW-31 | 5 | 8'-5" | 5 | 42'-1" | 23 | | 5'-6" | 1'-6" | 1 | 2 | | | 1 | | 2 | |
| AW-32 | 5 | 5'-0" | 6 | 30'-0" | 23 | | 2'-1" | 1'-6" | 1 | 2 | | | 1 | | 2 | |
| AW-33 | 5 | 5'-2" | 6 | 31'-0" | 23 | | 2'-3½ | 1'-6" | 1 | 2 | | | 1 | | 2 | |

| MARK | SIZE | LGTH. | NO. REQ. | TOTAL LENGTH | TYPE | A | B | C | D | E |
|---|---|---|---|---|---|---|---|---|---|---|

DGN Files 1P_PwPubns\16721\4433_C-045-14_Forum\bodm
02-MAY-2005

G STEEL

| F | G | H | J | K | O |
|---|---|---|---|---|---|

| MARK | SIZE | LGTH. | NO. REQ. | TOTAL LENGTH | TYPE | A | B | C | D | E | F | G | H | J | K | O |
|---|---|---|---|---|---|---|---|---|---|---|---|---|---|---|---|---|

| FED. ROAD DIST. NO. | STATE | REG. AID PROJ. NO. | FISCAL YEAR | SHEET NO. | TOTAL SHEETS |
|---|---|---|---|---|---|
| U. T. | UTAH | | POST WAR | | |

23

BAR TYPES

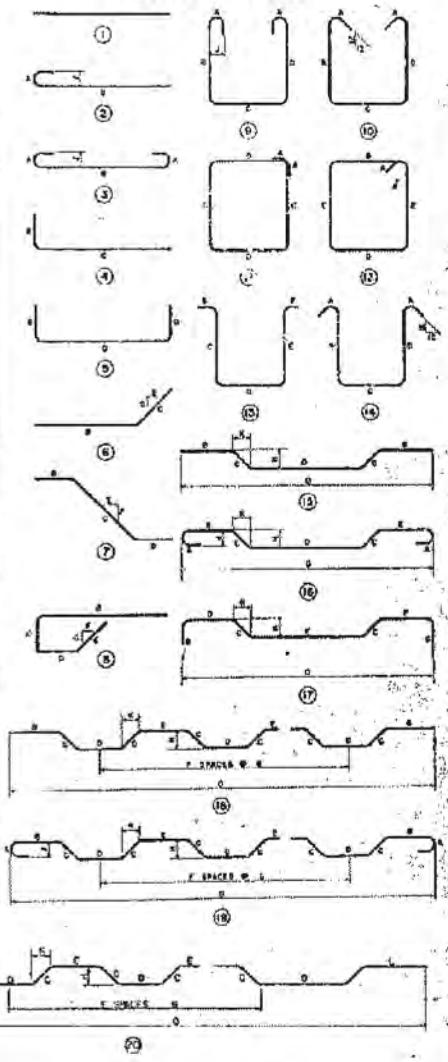

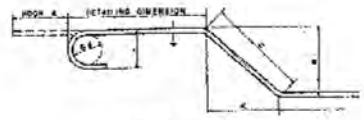


HOOK DETAIL

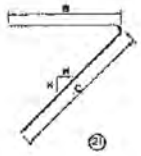

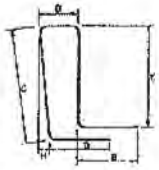

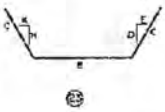

GENERAL NOTES

1. All placing drawings, detailing, and fabrication shall be in accordance with the "Manual of Standard Practice for Detailing Reinforced Concrete Structures (ACI 315-57)".
2. All dimensions shown for bar bending details are out-to-out of bars.

REGISTERED PROFESSIONAL ENGINEER NO. 2164 J. R. NEWVILLE STATE OF UTAH

DESIGN AND DRAWING BY
WESTERN ENGINEERS, INC. AND
EDWARDS AND KELCEY
CONSULTING ENGINEERS

SUBMITTED BY J. R. Newville CHIEF ENGINEER

UTAH REGS. LIC. NO. 2164

SHEET 14 OF 14 SHEETS

UTAH STATE ROAD COMMISSION
SALT LAKE CITY, UTAH
BRIDGE DEPARTMENT

AMERICAN FORK 3RD WEST OVERPASS

146'-5 1/8" O. TO C 127° XING ∠

STA. 263+15.493 I-15-6 (127) ALT. SHWY.

LEHI - PROVO UTAH COUNTY

DESIGNED BY MKG & LL SCALE

DRAWN BY S.A. ISSUED May 12, 1961

TRACED BY APPROVED D. L. Sorensen

CHECKED BY D.C. CHIEF BRIDGE ENGINEER

M. NO. PROJ. NO. C-345

STRUCTURE F-L

**FOR INFORMATION ONLY**

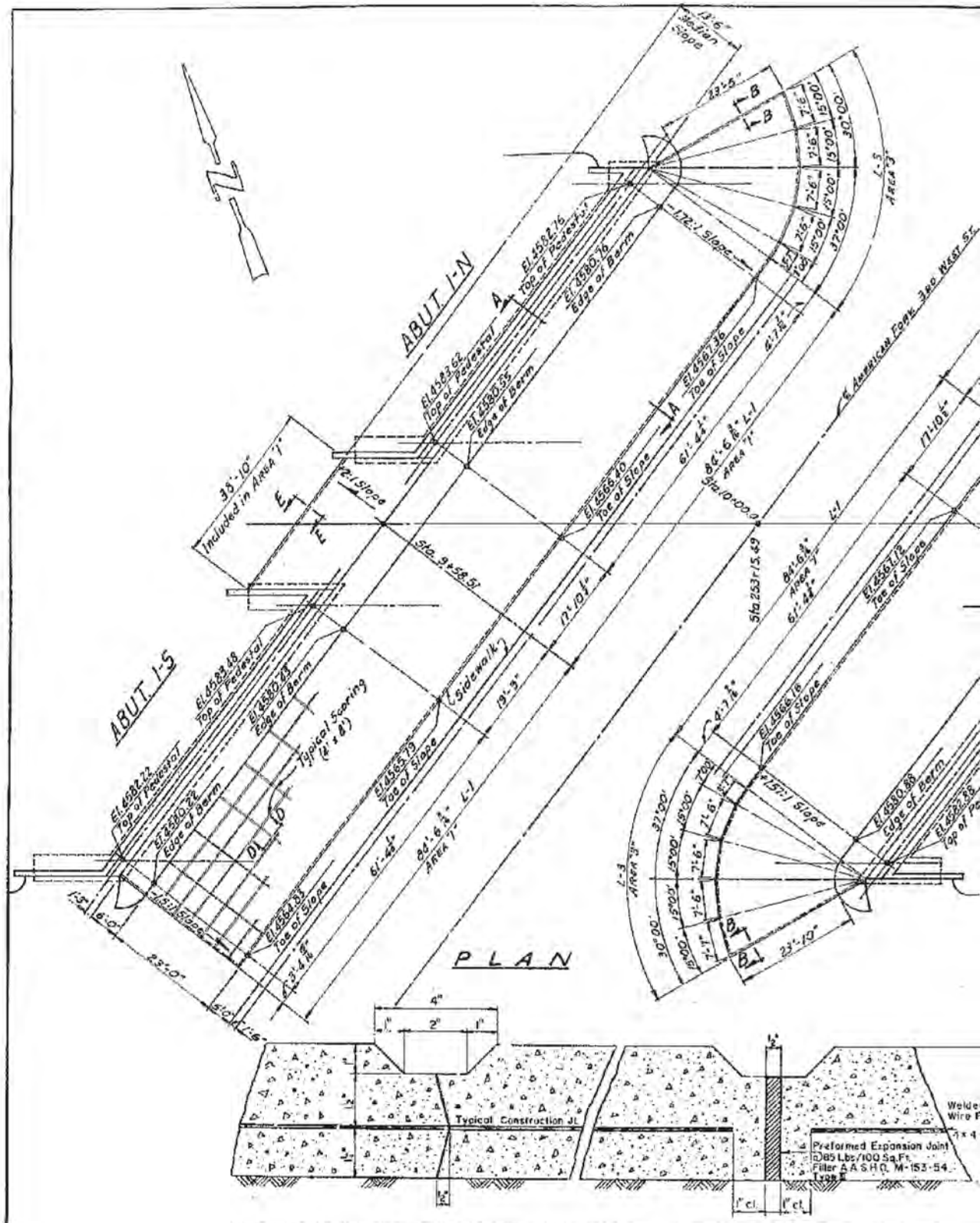
ABUT. I-N
ABUT. I-S
PLAN
Typical Scoring (2' x 8')
Sidewalk
Typical Construction Jt.
Preformed Expansion Joint
0.85 Lbs/100 Sq.Ft.
Filler A.A.S.H.O. M-153-54
Type E
Locate Construction Joints as needed in placing concrete slab. Locate vertical Expansion Joints at 40'-0" max. spacing in slab.
SECTION C-C
SECTION D-D

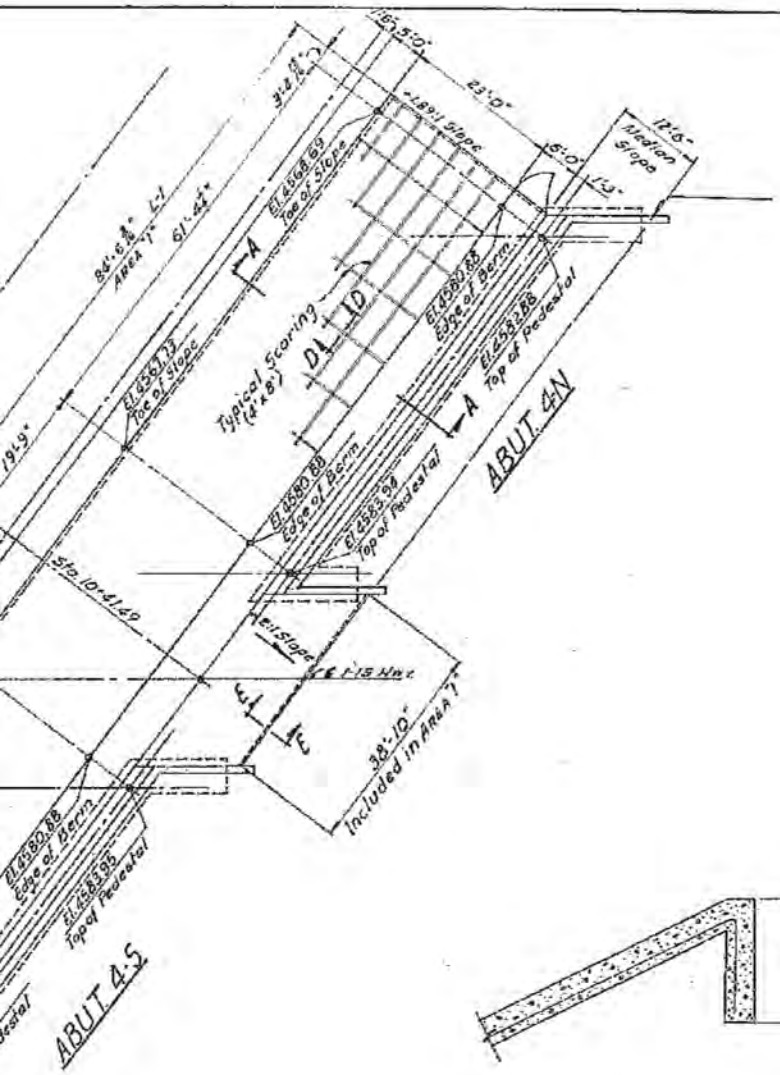


## CONC. SLOPE PROTECTION

| Location No. | Avg. Slope Length | Area "1" ② | Area "2" or "3" ③ | Quantity Sq. Yd. ① |
|---|---|---|---|---|
| Abut. 1N+15 | 27.14' | 566.35 | 55.4 | 622 |
| Abut. 4N 145 | 26.67 | 553.43 | 57.3 | 611 |
| | | | | |
| | | | | 1233 |

NOTES

① Quantity in Sq. Yd. is estimated exposed area.
② Area "1" = (Berm Width + Slope Length) x Toe Length
③ Area "2" or "3" = (Slope Length 16'-0") x Toe Length x ½

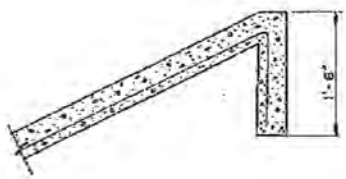


SECTION E-E
(Cut-off wall Detail)

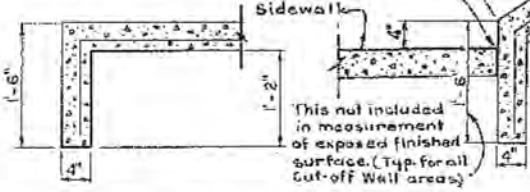


SECTION B-B
(Cut-off wall Detail)

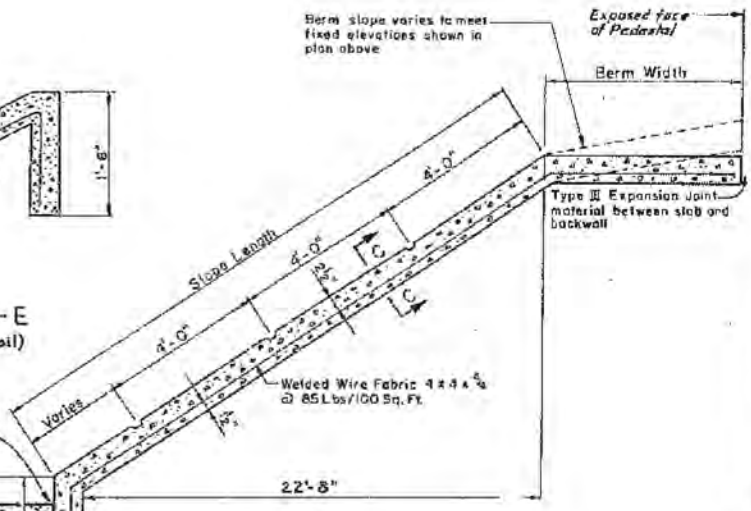


SECTION A-A

**FOR INFORMATION ONLY**

UTAH STATE DEPARTMENT OF HIGHWAYS
SALT LAKE CITY, UTAH
STRUCTURES DIVISION
LEHI TO PROVO
AMERICAN FORK 3RD WEST O'PASS
REINF. CONC. SLOPE PROTECTION

| | | |
|---|---|---|
| DESIGNED BY | CHECKED BY | I-15-6(13) 271 |
| DRAWN BY J.H.O. | CHECKED BY | |
| QUANTITIES BY | CHECKED BY | 253+15.49 |
| APPROVED | | UTAH |
| APPROVED | | |

REVISIONS

DRG. NO. C-345 14 of 14

To accompany CF-SP-2

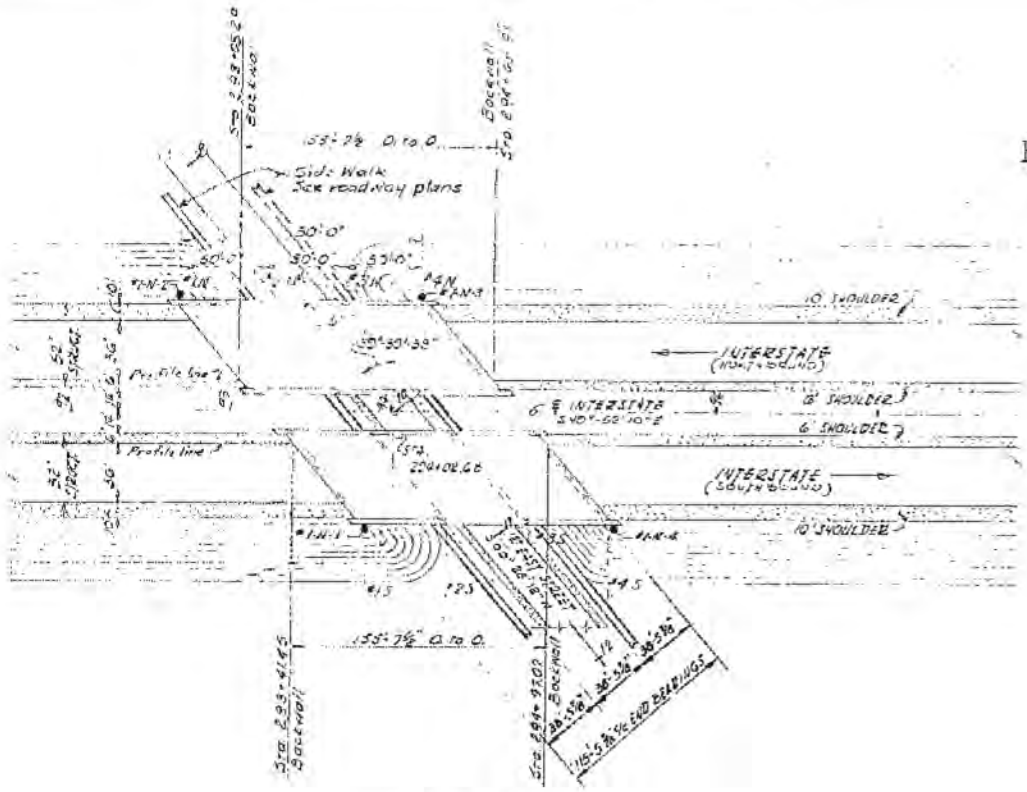


KEY PLAN
SCALE: 1" = 50'-0"

2 STRUCTURES

ESTIMATE OF QUANTITIES

| NO. | ITEM | QUANTITIES | |
|---|---|---|---|
| | EXCAV. FOR STRUCTURES (UNCLASS.) | 450 Cu.Yd. | 1,443.26 |
| | R.E. CONC. SLOPE PROTECTION | 1498 Sq.Yd. | 1,542.85 |
| | MECHANICAL TAMPING | 52 HR. | 54 |
| | CONCRETE CLASS "A" (AE) | 1415 Cu.Yd. | 1996.90 |
| | REINFORCING STEEL | 221530 LB. | |
| | STRUCTURAL STEEL | 366760 LB. | 371,202 |
| | FURN. PILE DRIVING EQUIP'T. | 1 Lump | |
| | TEST PILE | 57 Lin.Ft. | 53.50 |
| | LOAD TESTING | 1 Each | |
| | PILE (OTHER THAN TIMBER) | 2700 Lin.Ft. | 4703.60 |
| | METAL RAIL (SINGLE RAIL) | 714 Lin.Ft. | 710.40 |
| | 3" RIGID STEEL CONDUIT | 385 Lin.Ft. | 359.40 |
| | ELECTRICAL WORK BRIDGES | 1 Lump | |

DESIGN SPECIFICAT
CONSTRUCTION SPE
accordance with
Construction, 560 e
of request for bids
LIVE LOAD: H20-
Specifications of 19
REINFORCEMENT:
designation M137
ALLOWABLE STRE
fc - cast in place con
- 3000 P.S.I.
CONCRETE: Class A
CHAMFERS: Exposed
and 1/2" Fillets un
have 3/4" and 3/4"
joint filler to be
FOUNDATIONS: Foun
in construction.
and pre-coring
SHOP DRAWINGS:
PILE DESIGN LOAD
DATUM: All elevat
STRUCTURAL STEE
A.S.T.M. designation
BENCH MARK:

**FOR INFORMATION ONLY**

[redacted]

DGN Files IP PWPdms\16721\4433.C-046-81_Formfloor.dgn
02-MAY-2005

| FED. ROAD DIST. NO. | STATE | FED. AID PROJ. NO. | FISCAL YEAR | SHEET NO. | TOTAL SHEETS |
|---|---|---|---|---|---|
| 8 | UTAH | | | | |

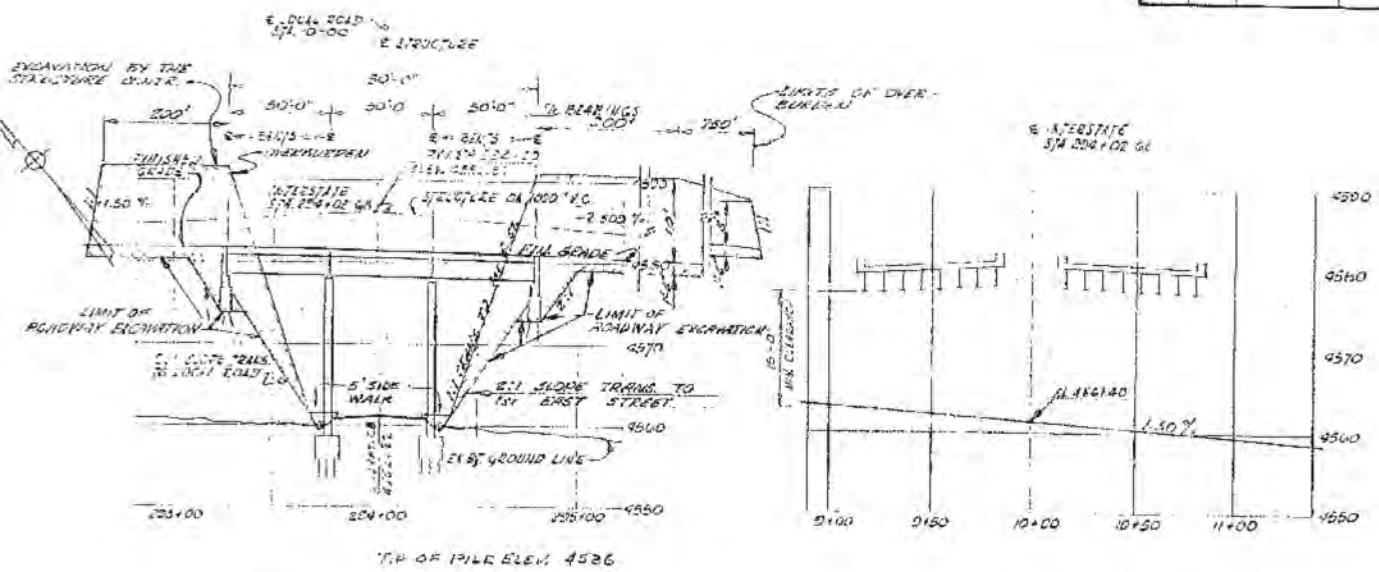


## PROFILE INTERSTATE

SCALES: 1" = 40'-0" HORIZ.
1" = 10'-0" VERT.

## PROFILE 1ST EAST STREET

SCALES: 1" 40'-0" HORIZ.
1" 10'-0" VERT.

## GENERAL NOTES

**TIONS:** A.A.S.H.O., Standard Specifications for Highway Bridges 1961 Edition.
**CIFICATIONS:** Materials, construction and workmanship shall be in
e Steel Standard Specifications for Road and Bridge
ition and Supplements thereto which are in effect at the date
.
16-48 Interstate Alternate Loading in accordance with the A.A.S.H.O.
S)
All reinforcing steel bars shall be new intermediate steel, intermediate grade,
Office Section M-31 and bars shall be fabricated and bent according to AASHO

**SSES:** Structural Steel - 18,000 P.S.I., reinforcing steel 20,000 P.S.I.
crete in compression 1,200 P.S.I. f'c - Ultimate compressive stress

concrete when Type II Low Alkali cement shall be used throughout.

concrete of substructure shall have 1½" chamfers
ss otherwise noted. Edges of concrete deck and sidewalks shall
fillets unless otherwise noted. Exposed corners on open joints and
beveled ⅝" or rounded.
ations may be altered if necessary to suit conditions encountered
piles shall be driven full length using air stroke steel hammer
necessary
of test drilling [illegible] approximately [illegible]

40 TONS

ors refer to U.S.C. and G.S. Mean Sea Level Datum of 1934

Unless otherwise noted, structural steel shall conform to
A-7.

## STANDARD DRAWINGS

| SHEET NUMBER | DESCRIPTION |
|---|---|
| ST-1 | STANDARD RAILING DETAILS |
| ST-3 | STANDARD PILES |
| ST-5 | STANDARD LIGHTING DETAILS |
| OR-1 | MODIFICATION-DECK-APPROACH SLAB |
| SS-3 | STANDARD STEEL DETAILS |
| | |
| | |

## INDEX OF SHEETS


| SHEET NUMBER | DESCRIPTION |
|---|---|
| 1 | KEY PLAN & INDEX SHEET |
| 2 | DECK PLAN & ELEVATION |
| 3 | BORING LOGS |
| 4 | FOUNDATION PLAN |
| 5 | ABUTMENTS NO'S. 1-N, 1-S, 4-N & 4-S |
| 6 | BENTS NO'S. 2-N, 2-S, 3-N & 3-S |
| 7 | FRAMING PLAN |
| 8 | TRANSVERSE SECTION |
| 9 | DETAILS |
| 10 | REINFORCING SCHEDULE |
| 11 | RE. CONC. SLOPE PROTECTION |
| 12 | SCREED ELEVATIONS |
| 12 a | ELECTRICAL WORK BRIDGES |


SHEET 1 OF 12 SHEETS

KEY PLAN AND INDEX SHEET

REGISTERED PROFESSIONAL ENGINEER NO. 2164 J. R. KERVILLE STATE OF UTAH

DESIGN AND DRAWING BY
WESTERN ENGINEERS, INC. AND
EDWARDS AND KELCEY
CONSULTING ENGINEERS

SUBMITTED BY [signature] CHIEF ENGINEER
UTAH ENGR. LIC. NO. 2164

UTAH STATE ROAD COMMISSION
SALT LAKE CITY, UTAH
BRIDGE DEPARTMENT

AMERICAN FORK 1ST EAST OVERPASS
155'-7½" O. TO O. 50° XING
STA. 294+02.678 I-15-6(10)271
LEHI-PROVO UTAH COUNTY

DESIGNED BY BK-RK-NR SCALE AS SHOWN
DRAWN BY BWS INCORPORATED 4-1962
TRACED BY BWS APPROVED [signature] CHIEF BRIDGE ENGINEER
CHECKED BY RT-RSN
NO. NO. END. NO. C-346

FINAL 1-8-64 [signature] STRUCTURE 1-N

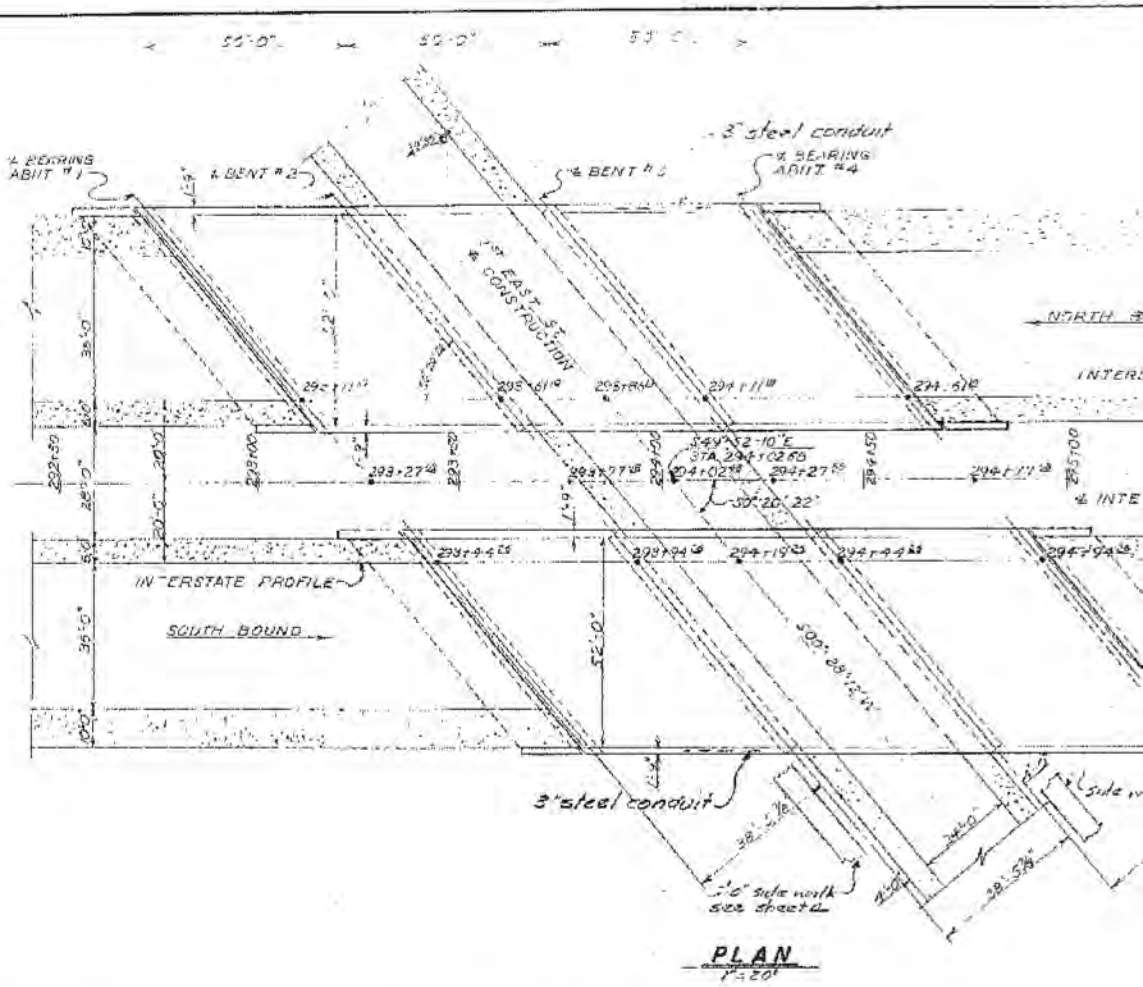


**FOR INFORMATION ONLY**

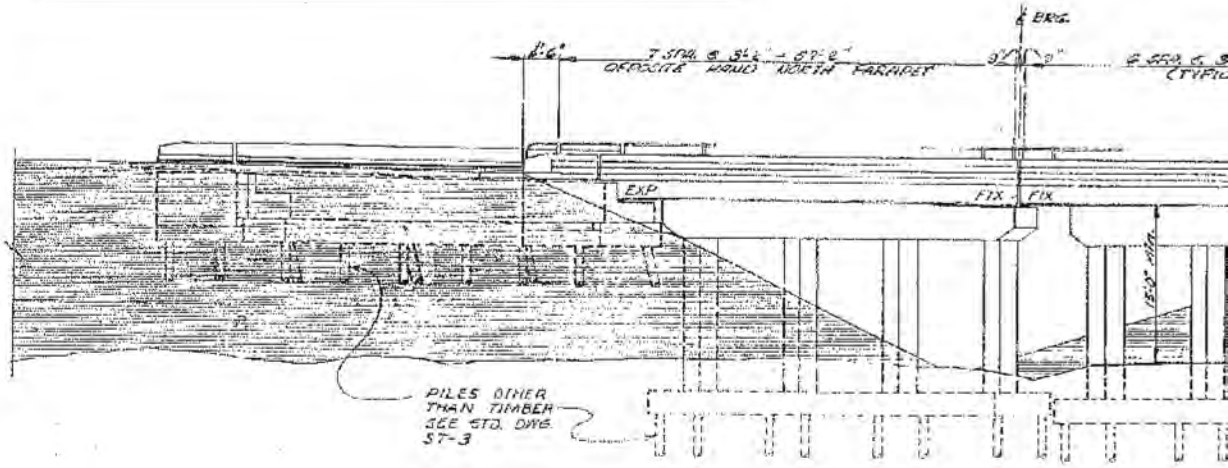


[redacted]

| FED. ROAD DIST. NO. | STATE | FED. AID PROJ. NO. | FISCAL YEAR | SHEET NO. | TOTAL SHEETS |
|---|---|---|---|---|---|
| | UTAH | | | | |

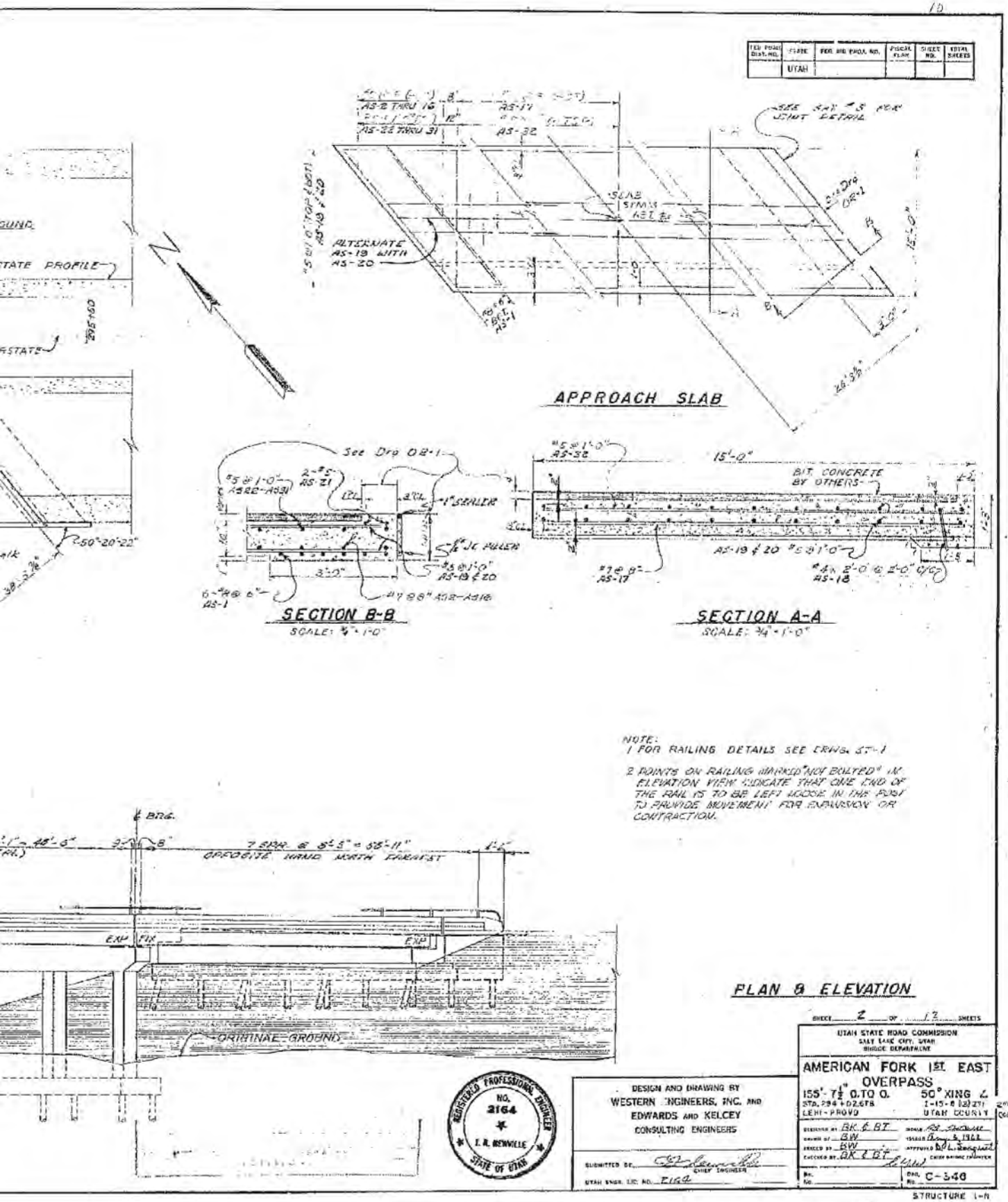


SHEET 2 OF 12 SHEETS

UTAH STATE ROAD COMMISSION
SALT LAKE CITY, UTAH
BRIDGE DEPARTMENT

AMERICAN FORK 1ST EAST OVERPASS

155'-7½" O.TO O. 50° XING ∠
STA. 294+02.678 I-15-8 (82) 271
LEHI-PROVO UTAH COUNTY

DESIGNED BY BK & BT
DRAWN BY BW
TRACED BY BW
CHECKED BY BK & BT

DESIGN AND DRAWING BY
WESTERN ENGINEERS, INC. AND
EDWARDS AND KELCEY
CONSULTING ENGINEERS

SUBMITTED BY CHIEF ENGINEER
UTAH ENGR. LIC. NO. 2164

REGISTERED PROFESSIONAL ENGINEER NO. 2164 I. R. BENVILLE STATE OF UTAH

DWG. NO. C-548

STRUCTURE 1-A

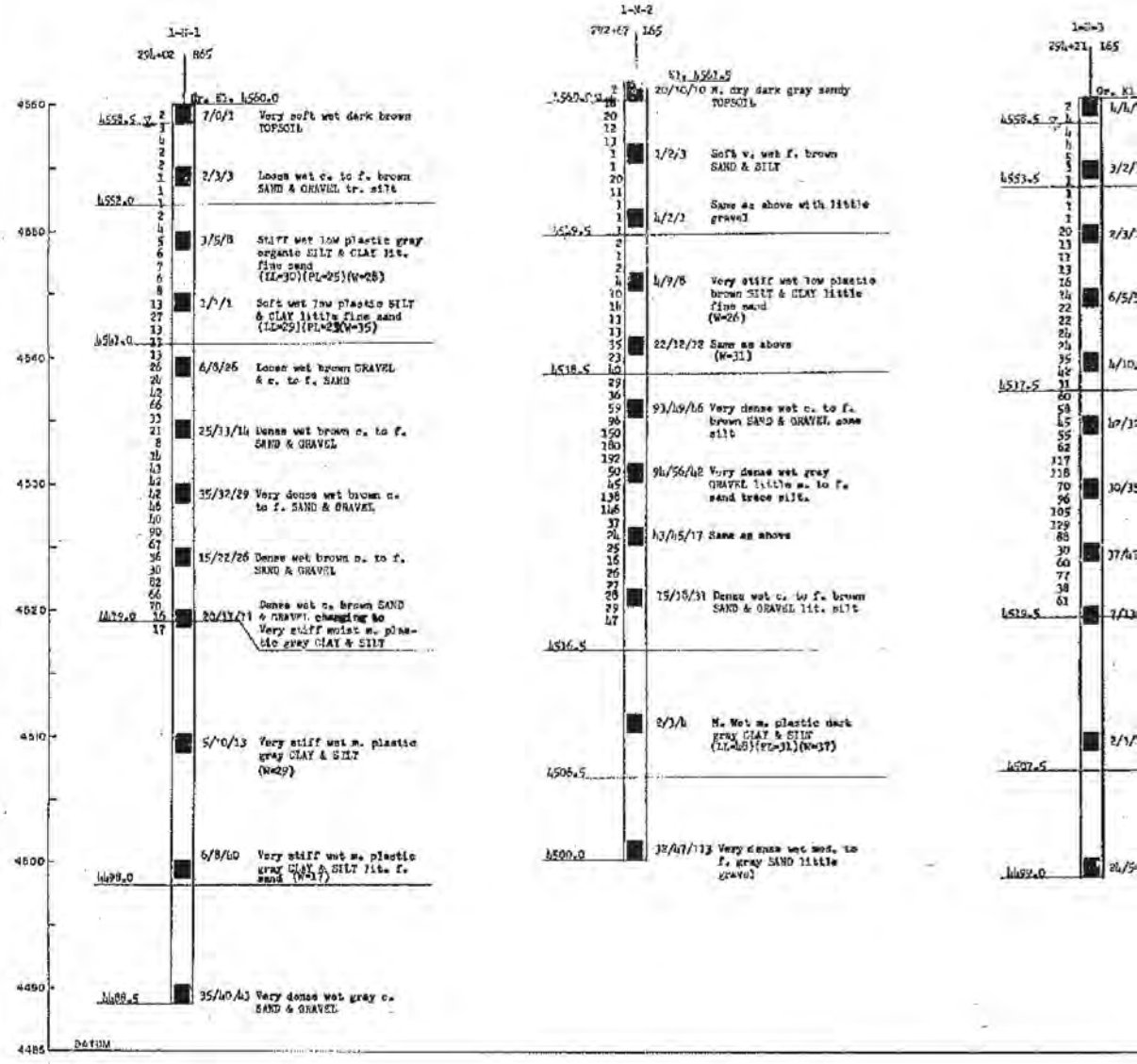


**FOR INFORMATION ONLY**

| U.S. BUREAU DIST. NO. | STATE | FED. AID PROJ. NO. | FISCAL YEAR | SHEET NO. | TOTAL SHEETS |
|---|---|---|---|---|---|
| | UTAH | | | | |

## LEGEND

Boring No. — 1-A-1

Interstate Station — 22+63 X72 — Offset

Ground Elevation — Gr. El. 4562

Ground Water Table Elevation 4557.1

Number of Blows Used to drive casing 12 inches with 300 lb. hammer falling 2 ft. (Typical)

Strata Change Elevation 4550 (Typical)

Boring Advanced Without Casing

Location of Sample (typical) 4539

Bottom of Boring Elevation 4535.5

Number of Blows Used to drive 1-3/8" I.D. sampler with 140 lb. hammer falling 30 inches — 1st. 6 inches, 2nd. 6 inches, 3rd. 6 inches

visual soil description for each sample and results of classification tests, if any (Typical)

ABBREVIATIONS IF AND WHEN USED

| | | |
|---|---|---|
| Br. = brown | m. = medium | LL = Liquid Limit in % |
| gr. = gray | c. = coarse | PL = Plastic Limit in % |
| org. = organic | sm. = some | W = Natural Moisture Content in % |
| f. = fine | tr. = trace | qu = Unconfined compression test from pocket penetrometer in T/ft² |
| v. f. = very fine | lit. = little | |

1-A-1

295+30 R65

Gr. El. 4559.0

| Elev. | Blows | Type | Description |
|---|---|---|---|
| 4560.5 | | | M. moist gray organic silty TOPSOIL |
| 4556.0 | 1 0 2 4 | 2/2/3 | Soft wet dark gray low plastic SILT & CLAY tr. sand tr. organic matter (LL=51)(PL=35)(W=4[illegible]) |
| | 5 1 2 4 | 2/1/4 | Soft wet low plastic gray SILT & CLAY little fine sand. (LL=33)(PL=27)(W=29) |
| | 12 13 12 10 13 | 2/2/2 | Soft wet low plastic gray SILT & CLAY tr. c. to f. sand. (W=29) |
| | 18 15 16 22 26 | 2/1/3 | Soft wet slightly plastic gray clayey SILT & fine SAND tr. organic fibrous matter. (W=22) |
| 4532.8 | 16 51 34 37 | 7/11/1[illegible] | Dense wet fine brown SAND & SILT |
| 4535.0 | 52 98 81 58 134 | 29/25/8 | Dense wet c. to f. brown SAND & GRAVEL little clayey silt |
| | 93 94 93 132 135 160 | 16/95/44 | Very dense wet c. to f. brown SAND & GRAVEL little clayey silt. |
| | 98 113 107 112 56 35 | 43/55/72 | Very dense wet c. to f. gray SAND & GRAVEL tr. clayey silt |
| 4516.0 | | 12/19/21 | Dense wet m. to fine brown SAND tr. silt |
| | | 4/6/8 | Stiff wet m. plastic gray CLAY & SILT (W=35) |
| 4503.0 | | | |
| | | 17/17/13 | Stiff wet low plastic dark gray SILT & CLAY some m. to f. sand (W=35) |
| 4494.0 | | | |
| 4496.5 | | 16/42/64 | Very dense moist m. gray SAND tr. gravel |

| Elev. | Blows | Type | Description |
|---|---|---|---|
| 4560 | 3 7 | 2/4/5 | Stiff m. plastic brown clay some silt-TOPSOIL |
| | 9 12 17 10 17 22 33 40 | 11/13/17 | M. dense wet tan m. to c. SAND, some silt, tr. f. gravel |
| 4550 | 36 53 86 92 106 | 15/21/30 | Dense wet tan m. to c. SAND, some gravel |
| | | 7/6/8 | Stiff, low plastic brown CLAY & SILT, tr. f. sand (LL = 40, PL = 28, W = 32) |
| 4539 | | 11/10/12 | Very stiff, plastic gray CLAY & SILT, tr. f. sand (W = 35, qu = 1T/ft ) |
| 4535.5 | | 9/12/20 | Very stiff varved plastic gray silty CLAY & f. silty SAND |

# BORING LOGS

SHEET 5 OF 12 SHEETS

UTAH STATE ROAD COMMISSION
SALT LAKE CITY, UTAH
BRIDGE DEPARTMENT

AMERICAN FORK 1st EAST OVERPASS

155'-7½" O. TO O. 50° XING ℄
STA. 204+02.678 1-15-6 031 278 2ND CONTR.
LEHI-PROVO UTAH COUNTY

DESIGNED BY [illegible] DATE [illegible]
DRAWN BY [illegible] INVESTIGATED [illegible] 1962
TRACED BY [illegible] APPROVED [illegible]
CHECKED BY [illegible] CHIEF BRIDGE ENGINEER

DR. No. C-348

STRUCTURE 1-H

DESIGN AND DRAWING BY
WESTERN ENGINEERS, INC. AND
EDWARDS AND KELCEY
CONSULTING ENGINEERS

SUBMITTED BY [signature] CHIEF ENGINEER
UTAH ENGR. LIC. NO. 2164

REGISTERED PROFESSIONAL ENGINEER NO. 2164 J. R. NEWVILLE STATE OF UTAH

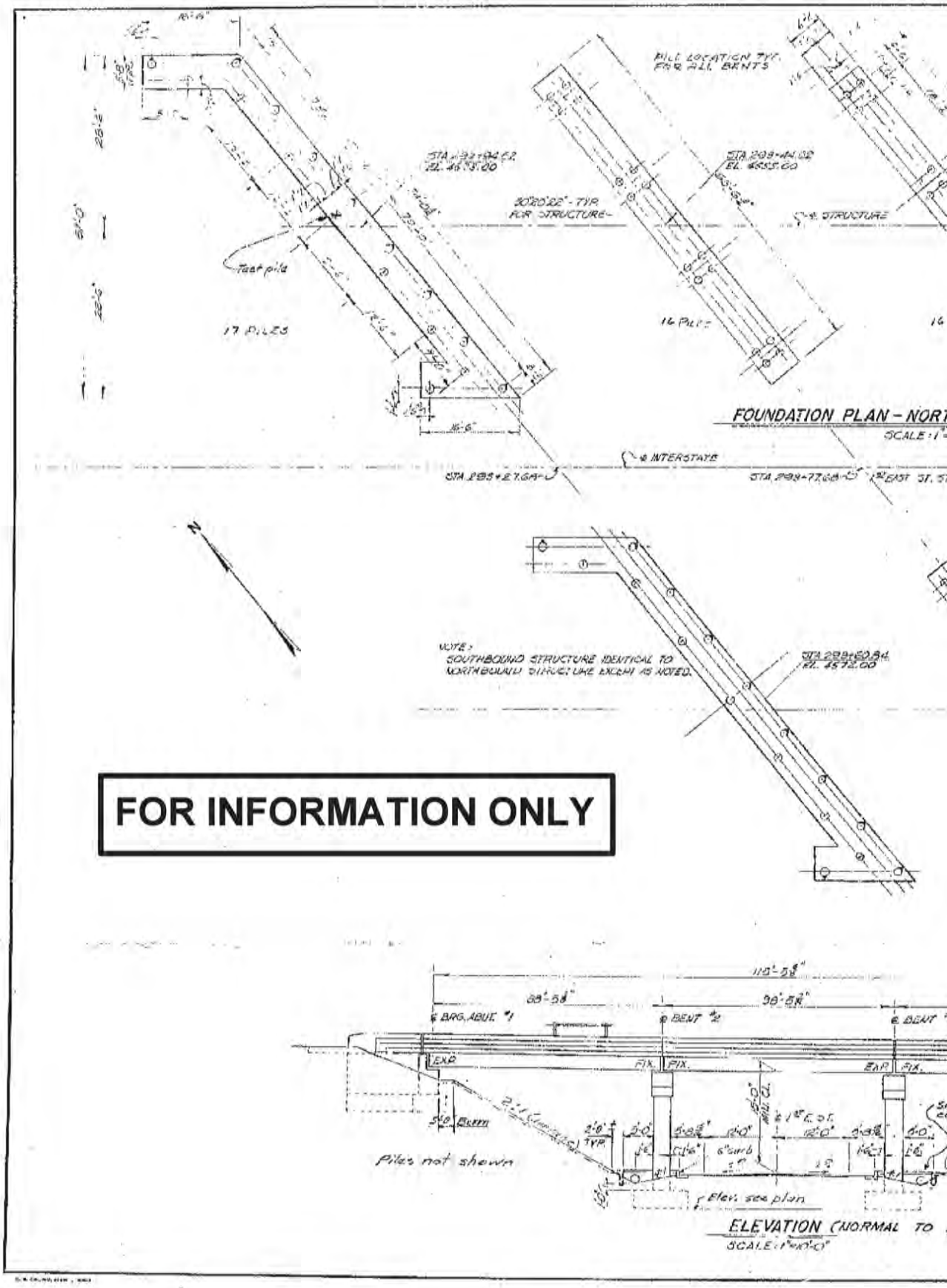
PILE LOCATION TYP. FOR ALL BENTS
STA. 283+27.64
EL. 4575.00
STA. 283+44.02
EL. 4555.00
20'20'22" - TYP. FOR STRUCTURE
℄ STRUCTURE
Test pile
17 PILES
16 PILES
16
FOUNDATION PLAN - NORT
SCALE: 1"=
℄ INTERSTATE
STA. 283+27.64
STA. 283+77.68
EAST ST.
NOTE:
SOUTHBOUND STRUCTURE IDENTICAL TO NORTHBOUND STRUCTURE EXCEPT AS NOTED.
STA. 283+60.84
EL. 4572.00
FOR INFORMATION ONLY
110'-5⅝"
38'-5⅝"
38'-5⅝"
℄ BRG. ABUT. #1
℄ BENT #2
℄ BENT
EXP.
FIX.
FIX.
EXP.
FIX.
2:1 (Max.)
5'-0"
Bottom
2'-0" TYP.
2'-0"
5'-8⅝"
12'-0"
6" curb
12'-0"
5'-8⅝"
6'-0"
Piles not shown
Elev. see plan
ELEVATION (NORMAL TO
SCALE: 1"=10'-0"

[redacted]

| FED. ROAD DIST. NO. | STATE | FED. AID PROJ. NO. | FISCAL YEAR | SHEET NO. | TOTAL SHEETS |
|---|---|---|---|---|---|
| | UTAH | | | | |

12

NOTE:
1. MAXIMUM PILE LOAD @ JENTS = 75 K. / pile - Groups 2&
2. MAXIMUM PILE LOAD @ ABUTMENTS = 73 Kips / pile Group III
3. PILE TIPS SHALL BE RESTRICTED TO A MINIMUM ELEVATION OF 4556
4. ONE OF TEST PILES SHALL BE LOAD TESTED SUBJECT TO APPROVAL BY THE ENGINEER.

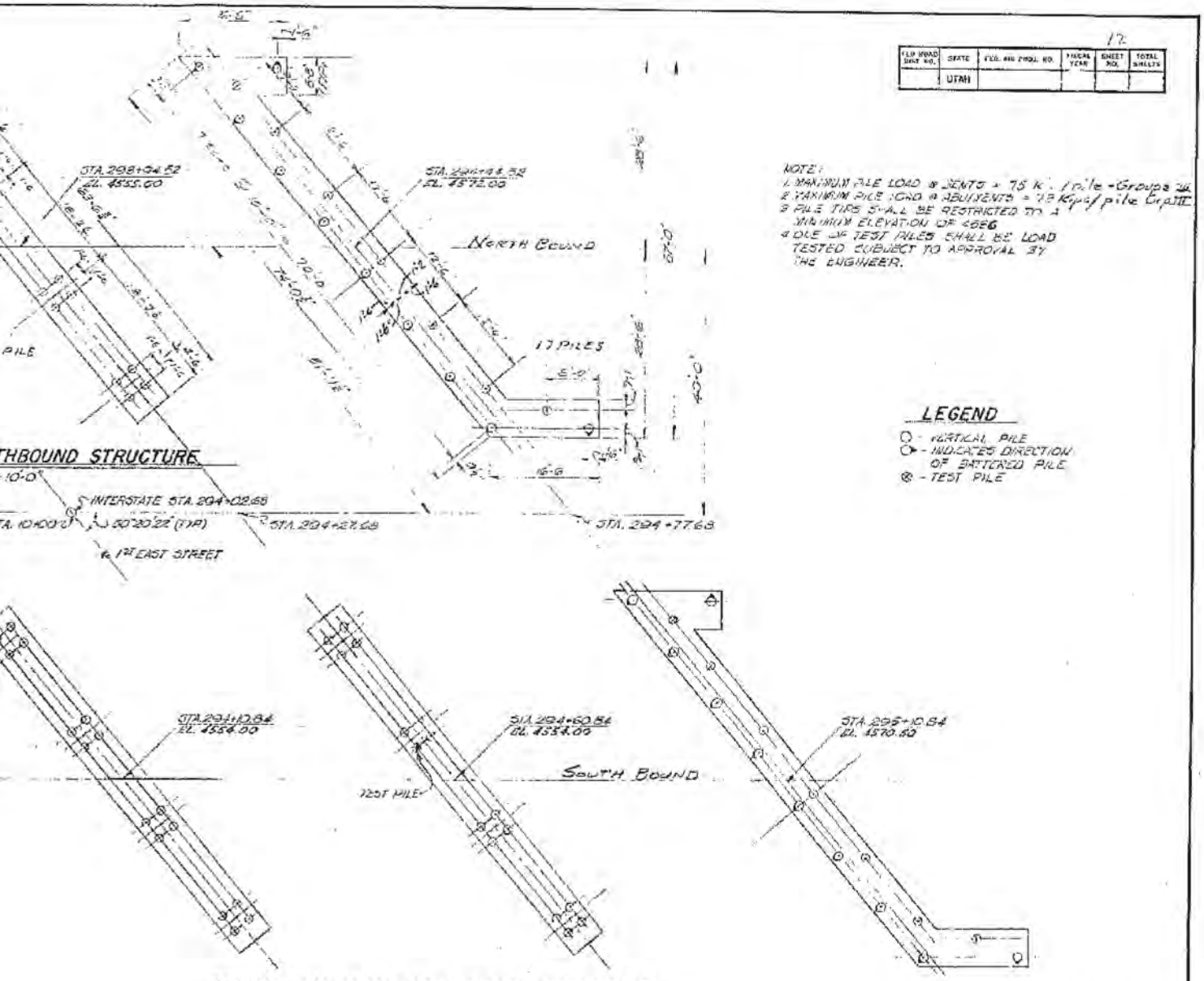


## LEGEND

- ○ - VERTICAL PILE
- ○➤ - INDICATES DIRECTION OF BATTERED PILE
- ⊗ - TEST PILE

## FOUNDATION PLAN - SOUTHBOUND STRUCTURE

SCALE: 1" = 10'-0"

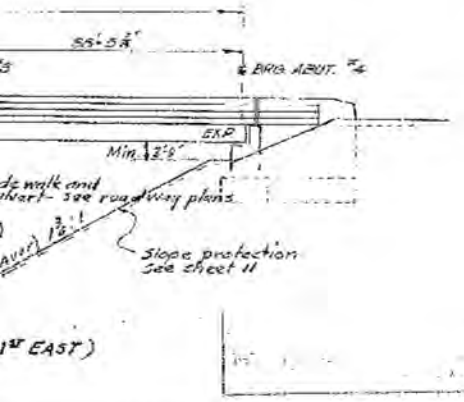


## FOUNDATION PLAN

SHEET 4 OF 12 SHEETS

UTAH STATE ROAD COMMISSION
SALT LAKE CITY, UTAH
BRIDGE DEPARTMENT

AMERICAN FORK 1ST EAST OVERPASS
155'-7½" O. TO O. 50° XING ∠
STA. 294+02.675 I-15-6(3)271 2ND CONTR
LEHI - PROVO UTAH COUNTY

DESIGNED BY B.K. & G.T. SCALE AS SHOWN
DRAWN BY C.J.A. ISSUED Aug. 2, 1962
TRACED BY C.J.A. APPROVED
CHECKED BY R.L. CHIEF BRIDGE ENGINEER

DR. No. C-346

STRUCTURE 1-N

REGISTERED PROFESSIONAL ENGINEER NO. 2164 J. R. MEWHILE STATE OF UTAH

DESIGN AND DRAWING BY
WESTERN ENGINEERS, INC. AND
EDWARDS AND KELCEY
CONSULTING ENGINEERS

SUBMITTED BY J. R. Mewhile CHIEF ENGINEER
UTAH ENGR. LIC. NO. 2164

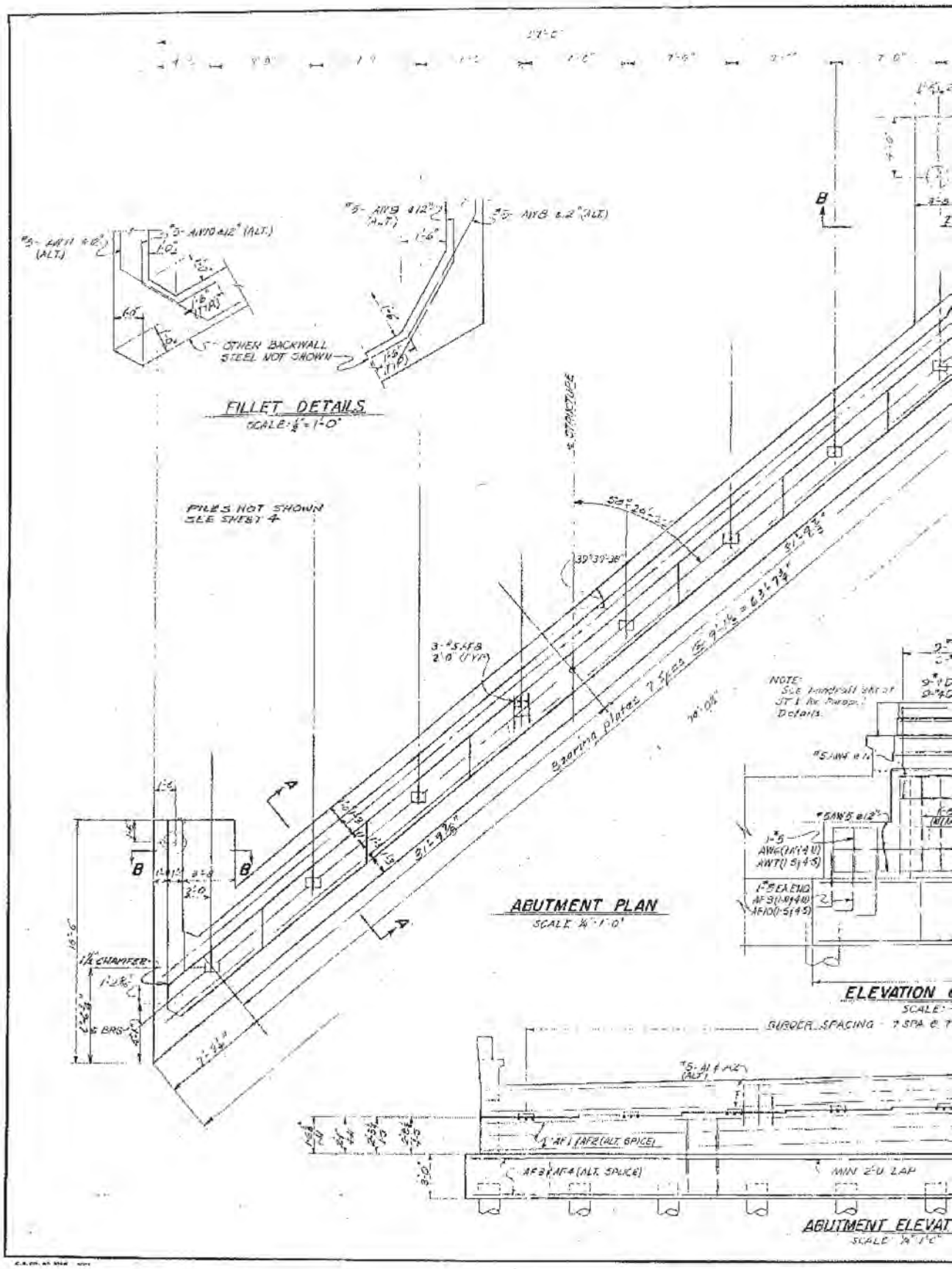
FILLET DETAILS
SCALE: 1/8" = 1'-0"
OTHER BACKWALL STEEL NOT SHOWN
PILES NOT SHOWN SEE SHEET 4
ABUTMENT PLAN
SCALE 1/4" = 1'-0"
1/4" CHAMFER
ELEVATION
ABUTMENT ELEVAT
SCALE 1/4" = 1'-0"

[redacted]

**FOR INFORMATION ONLY**

| FED. ROAD DIST. NO. | STATE | FED. AID PROJ. NO. | FISCAL YEAR | SHEET NO. | TOTAL SHEETS |
|---|---|---|---|---|---|
| | UTAH | | | | |

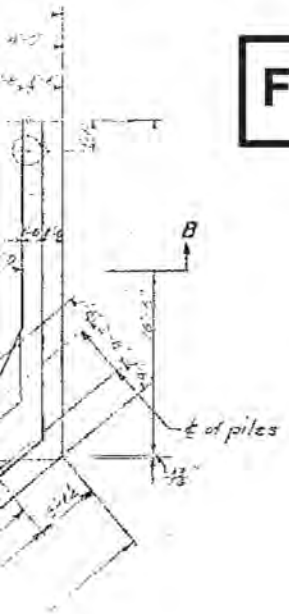


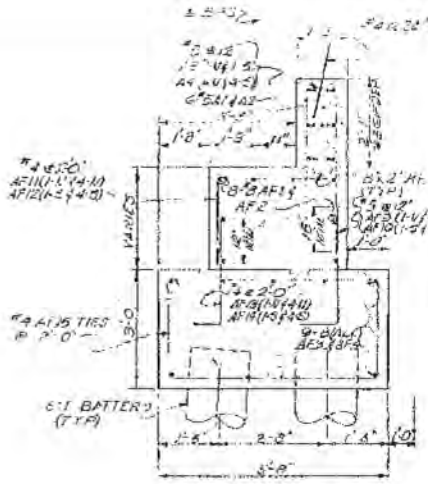


SECTION A-A
SCALE: ½"=1'-0"

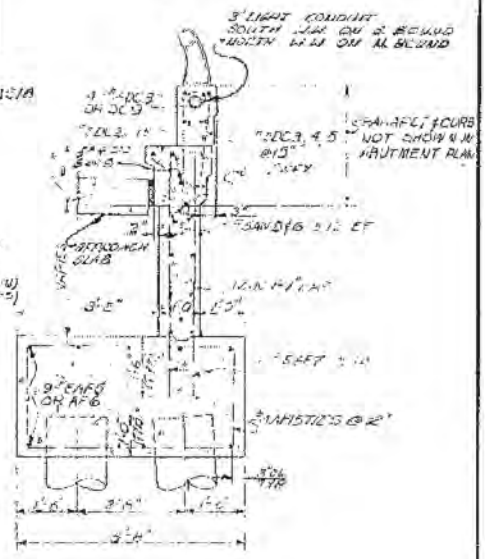


SECTION B-B
SCALE: ½"=1'-0"

| | ELEVATION ON TOP OF BEAM SEAT | | | | | | | |
|---|---|---|---|---|---|---|---|---|
| N 1-N | 77.53 | 77.49 | 77.84 | 77.97 | 78.11 | 78.25 | 78.40 | 78.41 |
| N 4-N | 77.08 | 77.20 | 77.31 | 77.42 | 77.52 | 77.66 | 77.73 | 77.81 |

| | ELEVATION ON TOP OF BEAM SEAT | | | | | | | |
|---|---|---|---|---|---|---|---|---|
| N 1-S | 78.46 | 78.61 | 78.14 | 77.99 | 77.82 | 77.65 | 77.48 | 77.31 |
| N 4-S | 77.61 | 77.42 | 77.25 | 77.03 | 76.83 | 76.63 | 76.42 | 76.21 |

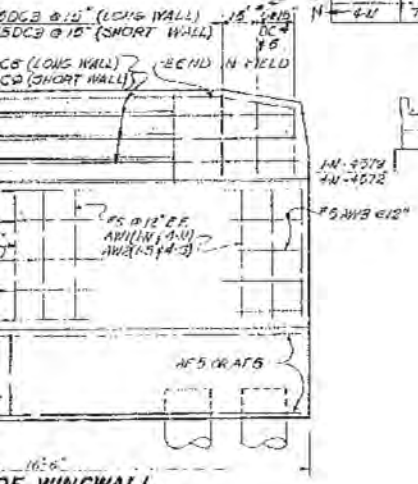


OF WINGWALL

NORTHBOUND STRUCTURE

SOUTHBOUND STRUCTURE

EXPANSION SHOE PLACEMENT
SCALE: 1"=1'-0"

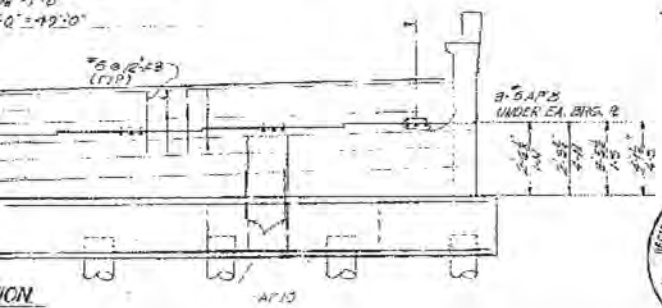


ABUTMENTS

REGISTERED PROFESSIONAL ENGINEER NO. 2164 L. R. NEWVILLE STATE OF UTAH

DESIGN AND DRAWING BY
WESTERN ENGINEERS, INC. AND
EDWARDS AND KELCEY
CONSULTING ENGINEERS

SUBMITTED BY L. R. Newville CHIEF ENGINEER
UTAH ENGR. REG. NO. 2164

SHEET 5 OF 12 SHEETS

UTAH STATE ROAD COMMISSION
SALT LAKE CITY, UTAH
BRIDGE DEPARTMENT

AMERICAN FORK 1ST EAST OVERPASS
155'-7½" O. TO O. 50° XING ∠
STA. 294+02.578 I-15-6 (13) 271
LEHI-PROVO UTAH COUNTY 2ND CONTR.

APPROVED BY BK & MK SCALE AS SHOWN
DRAWN BY GVA & BW ISSUED Jan. 3, 1962
TRACED BY GVA & BW APPROVED D. L. Sargent CHIEF BRIDGE ENGINEER
CHECKED BY BK & PW

No. No. DWG. NO. C-346

STRUCTURE 1-N

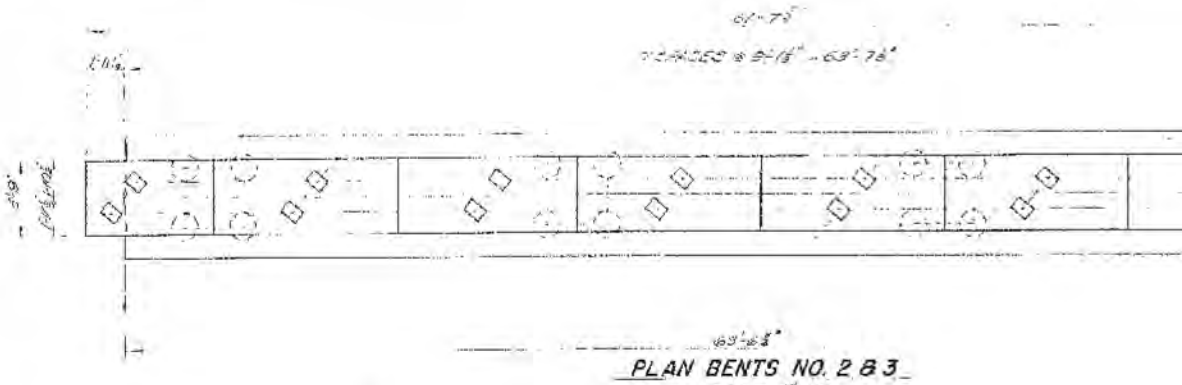

PLAN BENTS NO. 2 & 3
SCALE 1/4" = 1'-0"

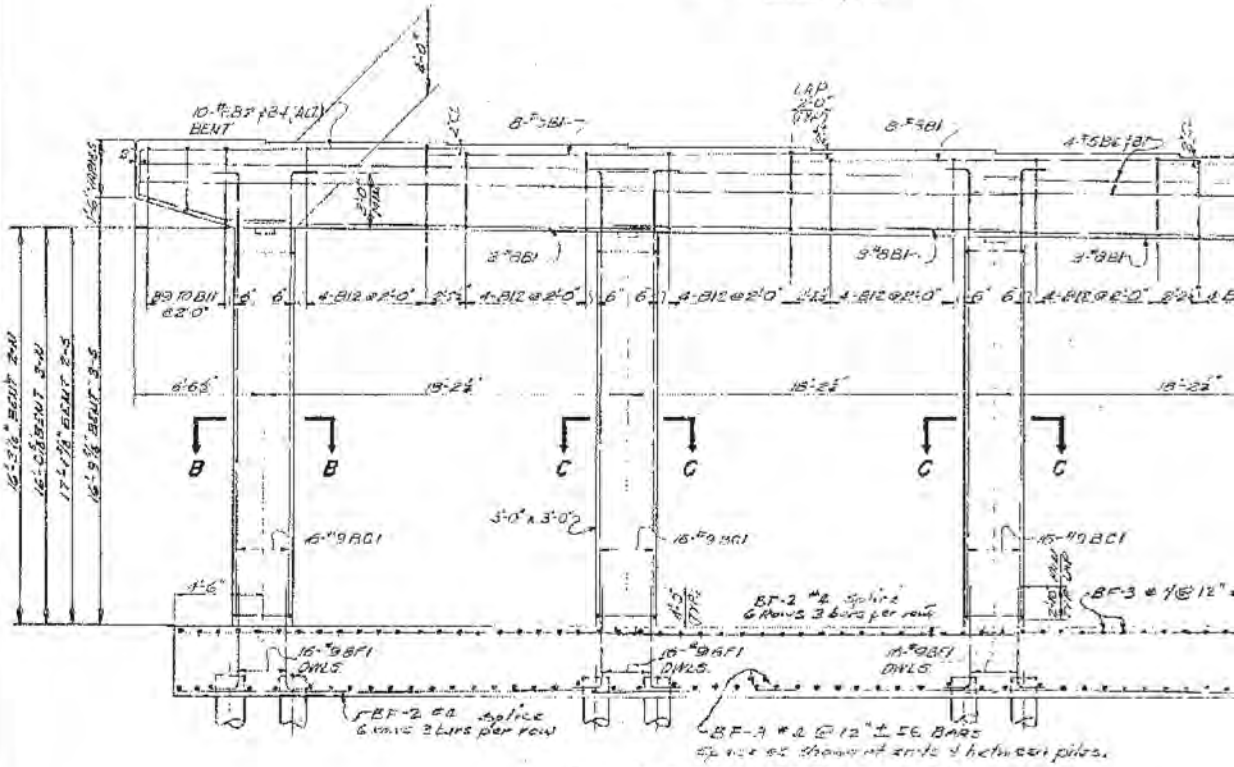


ELEVATION BENTS NO. 2 & 3
SCALE 1/4" = 1'-0"

ELEVATIONS ON TOP OF BENTS

| | | | | | | | | | |
|---|---|---|---|---|---|---|---|---|---|
| North | BENT #2 | 77.49 | 77.63 | 77.76 | 77.88 | 78.02 | 78.14 | 78.27 | 78.38 |
| | | 77.49 | 77.63 | 77.76 | 77.89 | 78.03 | 78.16 | 78.28 | 78.39 |
| North | BENT #3 | 77.33 | 77.46 | 77.58 | 77.70 | 77.82 | 77.92 | 78.05 | 78.14 |
| | | 77.34 | 77.47 | 77.59 | 77.71 | 77.83 | 77.93 | 78.06 | 78.15 |

ELEVATIONS ON TOP OF

| | | | | | | |
|---|---|---|---|---|---|---|
| N | BENT #2 | 78.27 | 78.11 | 77.93 | 77.77 | 77.58 |
| | | 78.28 | 78.12 | 77.94 | 77.78 | 77.59 |
| N | BENT #3 | 77.99 | 77.81 | 77.63 | 77.44 | 77.25 |
| | | 78.00 | 77.83 | 77.64 | 77.46 | 77.27 |

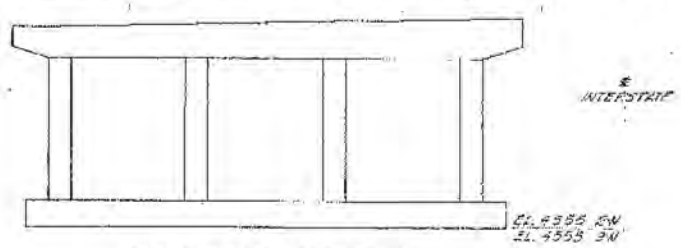


NORTHBOUND STRUCTURE

SOUTHBOUND STR

[redacted]

| FED. HIGHWAY ADM. NO. | STATE | FED. AND PROJ. NO. | FISCAL YEAR | SHEET NO. | TOTAL SHEETS |
|---|---|---|---|---|---|
| | UTAH | | | | |

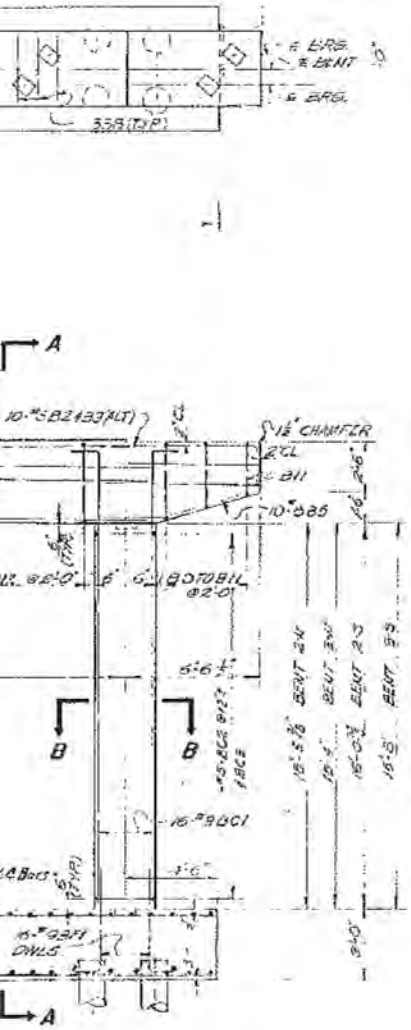


| BENTS | | |
|---|---|---|
| 77.40 | 77.22 | 77.03 |
| 77.41 | 77.24 | 77.03 |
| 77.06 | 76.86 | 76.67 |
| 77.03 | 76.85 | 76.67 |

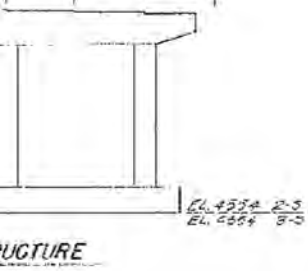


UCTURE

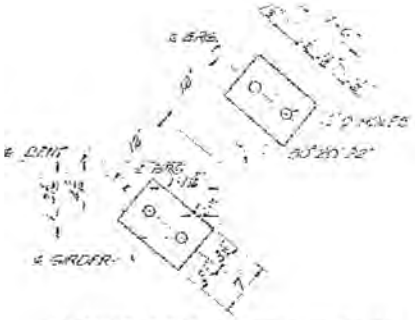


ANCHOR BOLT LOCATION PLAN
BENTS NO. 2 & 3
SCALE: 1" = 1'-0"

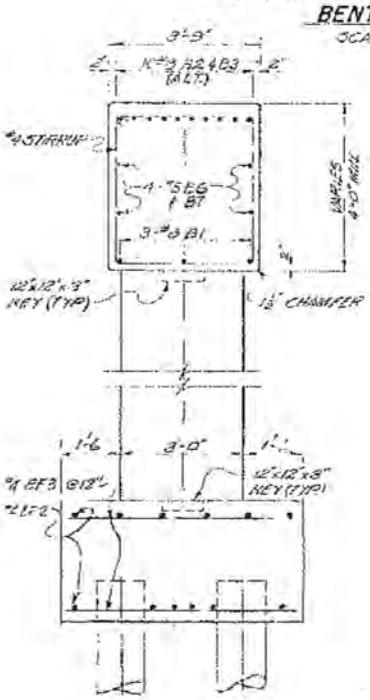


SECTION A-A
SCALE: ½" = 1'-0"

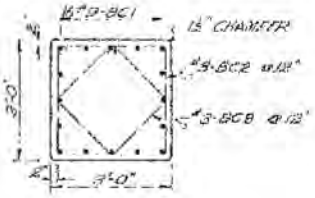


SECTION B-B & C-C
SCALE: ½" = 1'-0"

**FOR INFORMATION ONLY**

BENTS NO. 2 & 3

SHEET 4 OF 12 SHEETS

UTAH STATE ROAD COMMISSION
SALT LAKE CITY, UTAH
BRIDGE DEPARTMENT

AMERICAN FORK 1ST EAST OVERPASS
155'-7½" O. TO O. 50° XING
STA. 294+02.678 I-15-6 (3) 271
LEHI-PROVO UTAH COUNTY

DESIGNED BY B.K. SCALE 1/8 FT=1 FOOT
DRAWN BY C.V.A. INSPECTED Eng. B. McC.
TRACED BY C.V.A. APPROVED
CHECKED BY B.K. CHIEF BRIDGE ENGINEER

DR. NO. DWG. NO. C-346

REGISTERED PROFESSIONAL ENGINEER NO. 2164 J. R. NOWLIN STATE OF UTAH

DESIGN AND DRAWING BY
WESTERN ENGINEERS, INC. AND
EDWARDS AND KELCEY
CONSULTING ENGINEERS

SUBMITTED BY CHIEF ENGINEER
UTAH CHOR. LIC. NO. 2164

STRUCTURE 1-N

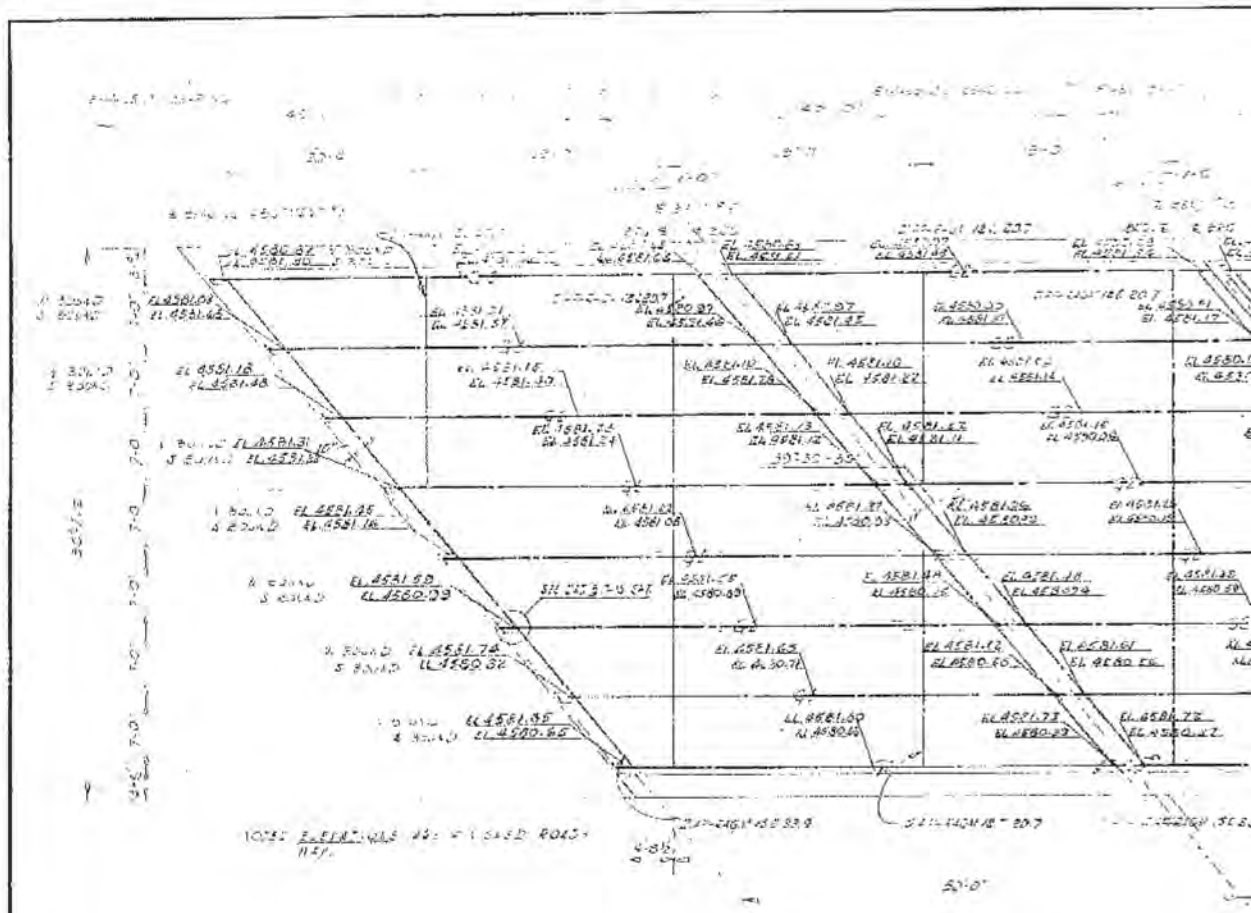

FRAM

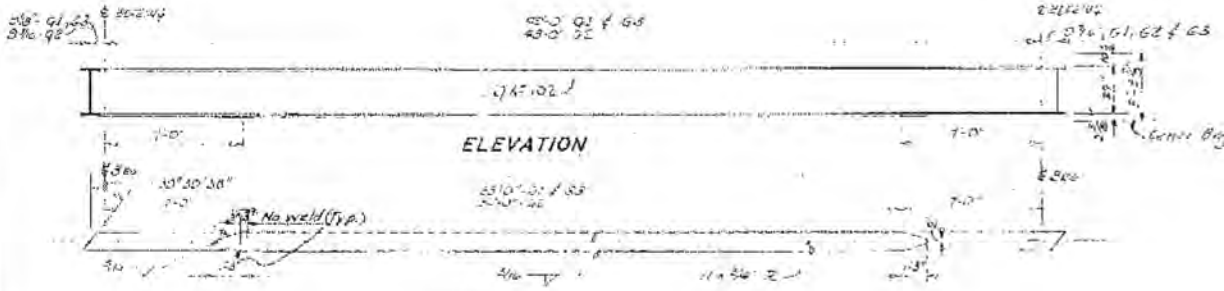


BOTTOM VIEW

G1 - AS NOTED 16 REQ.
G2 - AS NOTED 16 REQ.
G3 - AS NOTED 16 REQ.

NOTE:
See Drg SS-8 For B
Use Type 4 For Fine
See Paint Note - Drg.

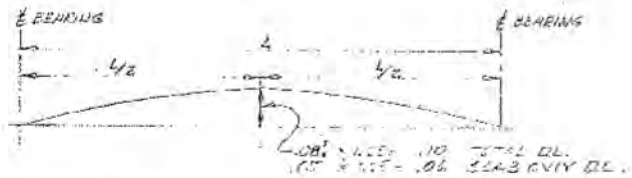


PARABOLIC CAMBER DIAGRAM

FOR INFOR

| FED. ROAD DIST. NO. | STATE | FED. AID PROJ. NO. | FISCAL YEAR | SHEET NO. | TOTAL SHEETS |
|---|---|---|---|---|---|
| | UTAH | | | | |

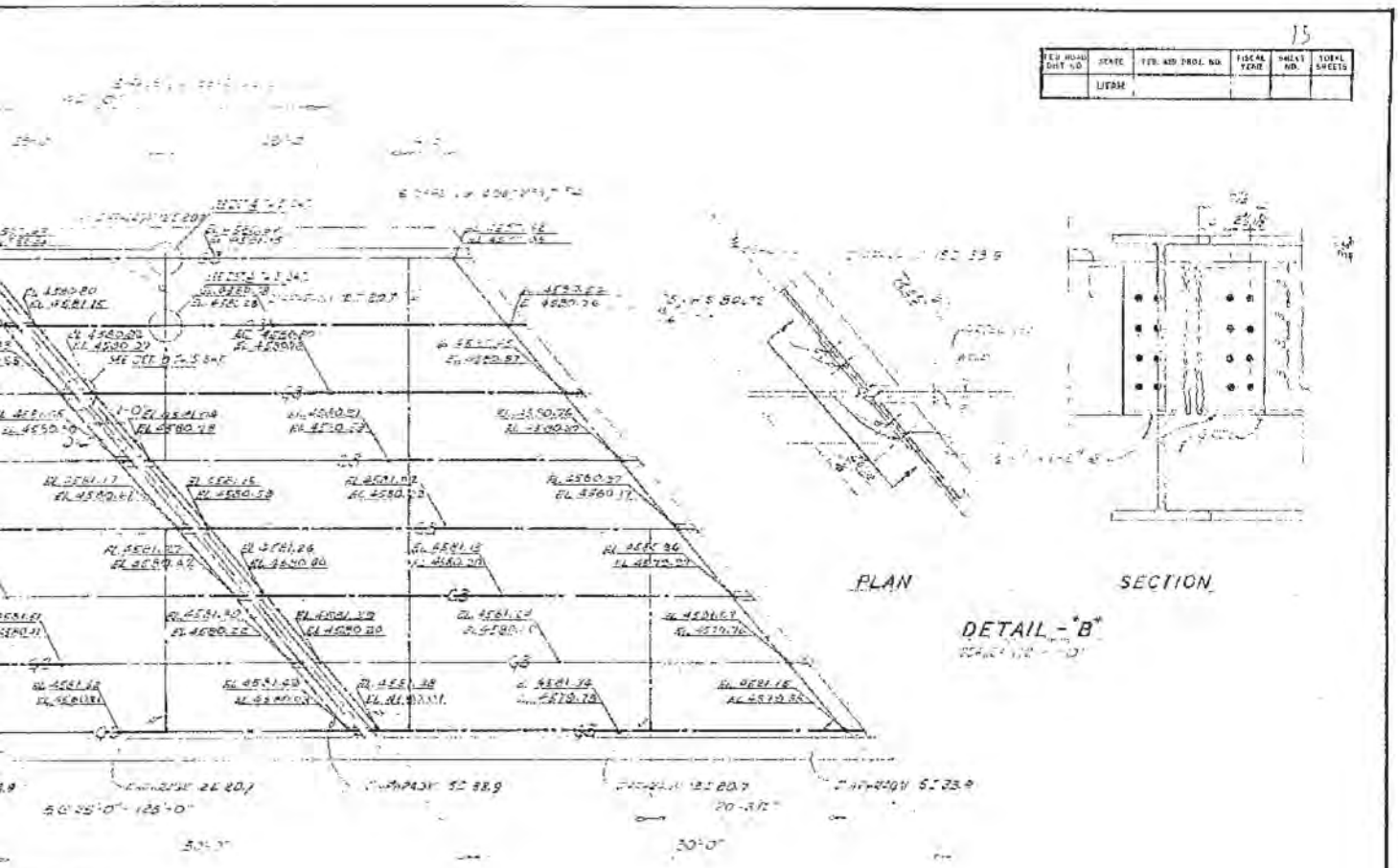

FRAMING PLAN



PLAN SECTION

DETAIL - "B"

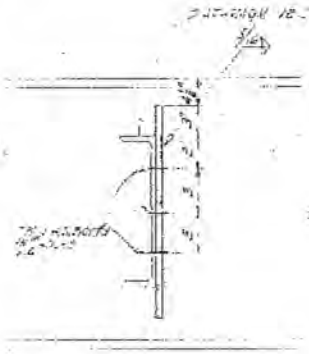

SECTION THRU CHANNEL

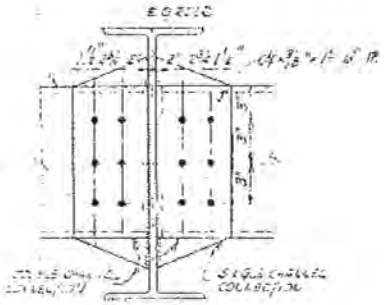

SECTION THRU GIRDER

WELDING DETAILS

DETAIL - "A"

...oring Details
...d Expansion Bearings
...55-3

REGISTERED PROFESSIONAL ENGINEER NO. 2164 J. R. NEWBLE STATE OF UTAH

FRAMING PLAN

NOTE -
SEE SHEET 9 FOR SPACING OF SHEAR CONNECTORS FOR STEEL GIRDERS.
ALL DIAPHRAGM FIELD CONNECTIONS SHALL BE MADE WITH 3/4 DIAMETER HIGH-TENSILE STRENGTH STEEL BOLTS.

DESIGN AND DRAWING BY
WESTERN ENGINEERS, INC. AND
EDWARDS AND KELCEY
CONSULTING ENGINEERS

SUBMITTED BY ... CHIEF ENGINEER
UTAH ENGR. LIC. NO. 2164

SHEET 7 OF 12 SHEETS

UTAH STATE ROAD COMMISSION
SALT LAKE CITY, UTAH
BRIDGE DEPARTMENT

AMERICAN FORK 1ST EAST OVERPASS
155'-7 1/8" O. TO O. 50° XING ∠
STA. 294+02.678 I-15-6(20)271 2ND CONTR.
LEHI - PROVO UTAH COUNTY

DESIGNED BY BK, BT SCALE AS SHOWN
DRAWN BY BWS ISSUED Aug. 3, 1962
CHECKED BY BWS
DATE ... SUBMITTED ...
No. ... No. ...
DWG. No. C-346

STRUCTURE 1-N

RMATION ONLY

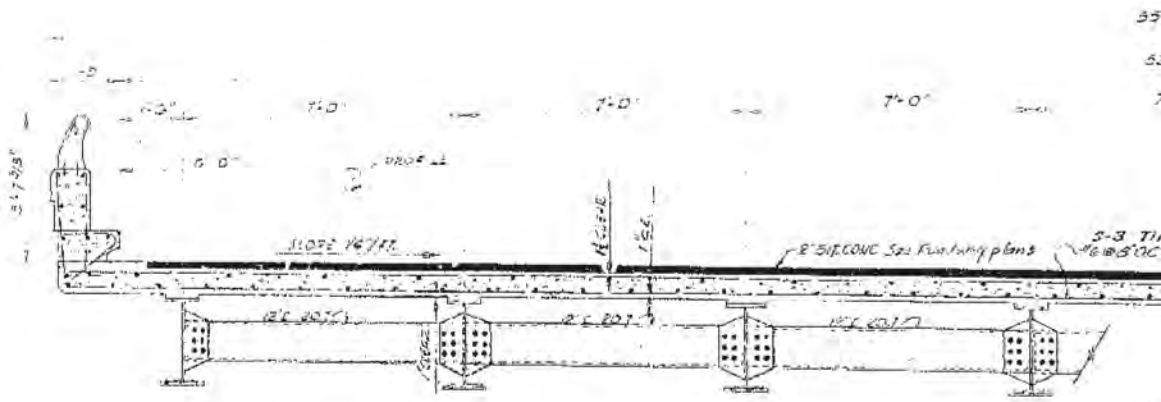

HALF SECTION IN SPAN

"TYPICAL" C

SCALE: 1/2" = 1'-0"

NOTE:
GIRDERS TO BE
SHEET NO. 7

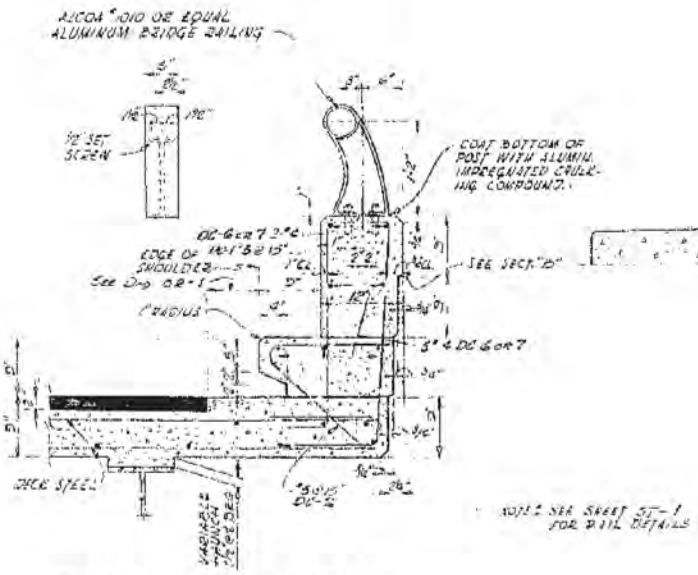


"TYPICAL" CURB "DETAIL"

SCALE: 1" = 1'-0"

NOTE: SEE SHEET ST-1 FOR RAIL DETAILS

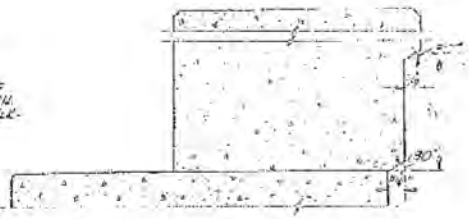

"SECTION" "B"

NO SCALE

**FOR INFORMATION ONLY**

| FED. AID PROJ. NO. | FISCAL YEAR | SHEET NO. | TOTAL SHEETS |
|---|---|---|---|
| | | | |

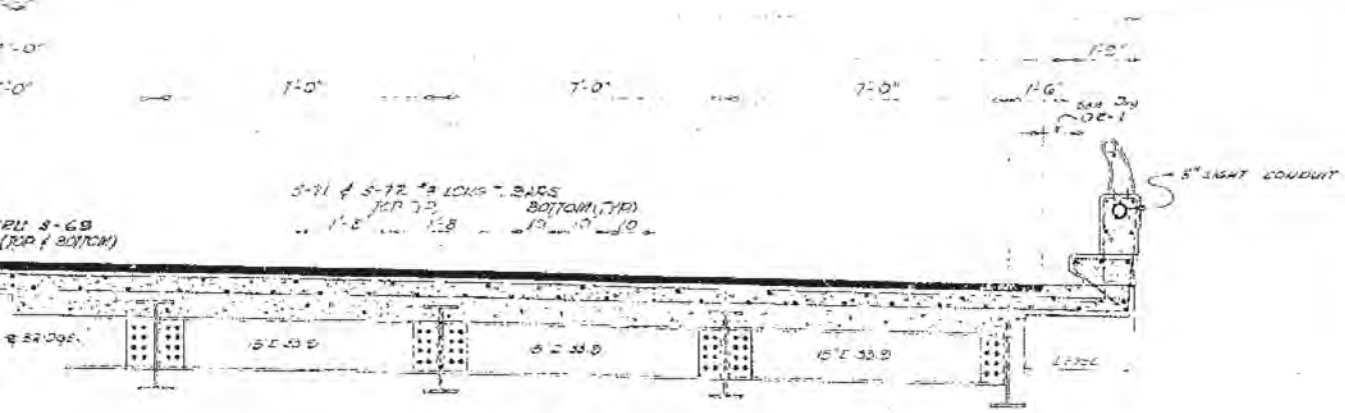


HALF SECTION AT BEARING

CROSS • SECTION •

CAMBERED AS SHOWN ON

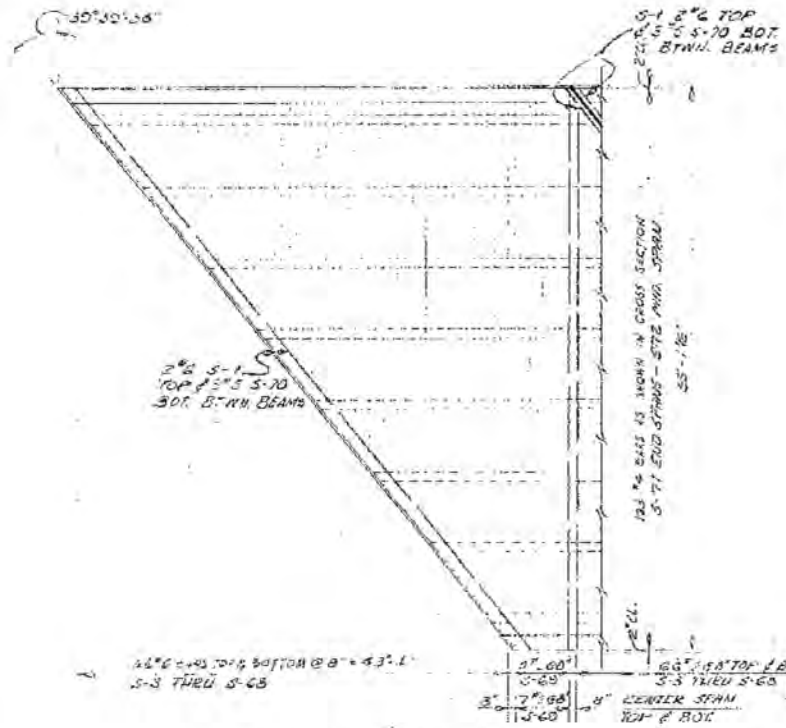


END OF BRIDGE DECK

SCALE: 3/8" = 1'-0"

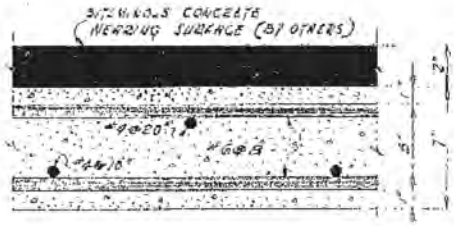


• TYPICAL • DECK • DETAIL •

SCALE: 3" = 1'-0"

TRANSVERSE SECTION

SHEET 8 OF 18 SHEETS

UTAH STATE ROAD COMMISSION
SALT LAKE CITY, UTAH
BRIDGE DEPARTMENT

AMERICAN FORK 1ST EAST OVERPASS

155'-7½" O. TO O. 50° XING ∠
STA. 294+02.678 I-15-6(10)271
LEHI-PROVO UTAH COUNTY

2ND CONTR.

DESIGNED BY B.L.-O.F. SCALE AS SHOWN
DRAWN BY BKS DATE Aug. 3, 1962
TRACED BY BKS APPROVED B.L.S.
CHECKED BY B.L. LEHI PRINCIPAL ENGINEER

NO. PROJ. NO. C-346

DESIGN AND DRAWING BY
WESTERN ENGINEERS, INC. AND
EDWARDS AND KELCEY
CONSULTING ENGINEERS

SUBMITTED BY L. R. Newville CHIEF ENGINEER
UTAH ENGR. LIC. NO. 2164

REGISTERED PROFESSIONAL ENGINEER NO. 2164 L. R. NEWVILLE STATE OF UTAH

STRUCTURE 1-N

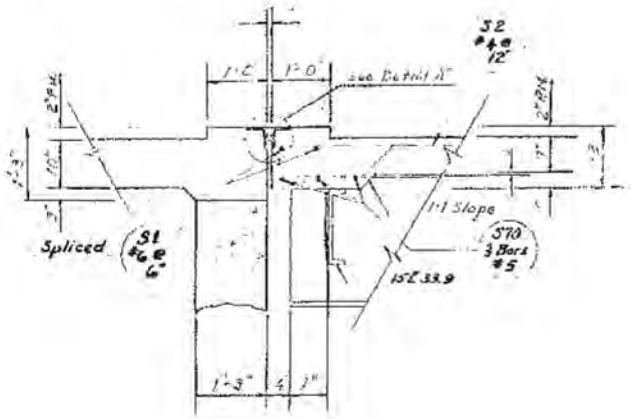


EXPANSION JOINT DETAIL @ ABUTMENT

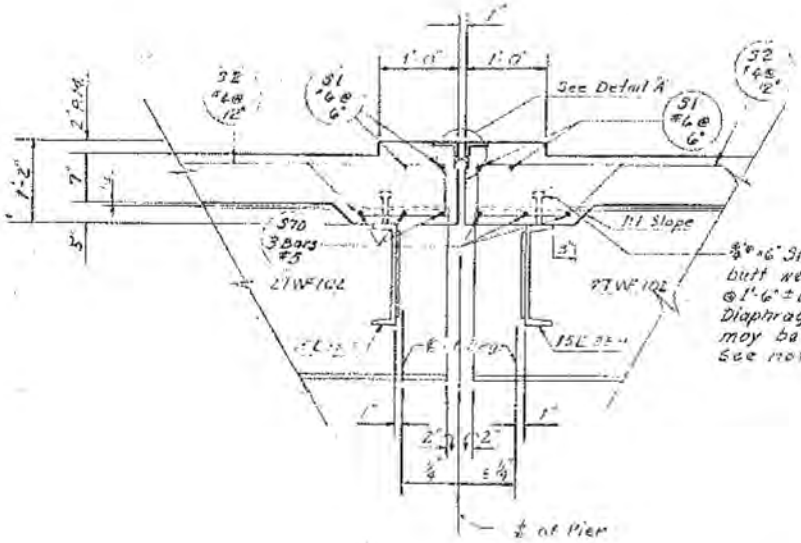


EXPANSION JOINT DETAIL @ BENT

Armor angle to extend curb to curb L 3×2×

½"ϕ x 5¾" min. stude @ or alternate bent bar to be paid for per basis of

¾"ϕ×6" Studs full penetration butt welded to channel flange @1'-6"± o.c. Typical for all end Diaphragms. (2" length of 4L 5.4 may be used as alternate. See note.)

| END SPANS | M |
|---|---|
| 52 @ 4"<br>10 @ 6"<br>21 @ 8"<br>10 @ 6"<br>56 @ 4" | |

SHEAR CONNE

**FOR INFORMATION ONLY**

[redacted]

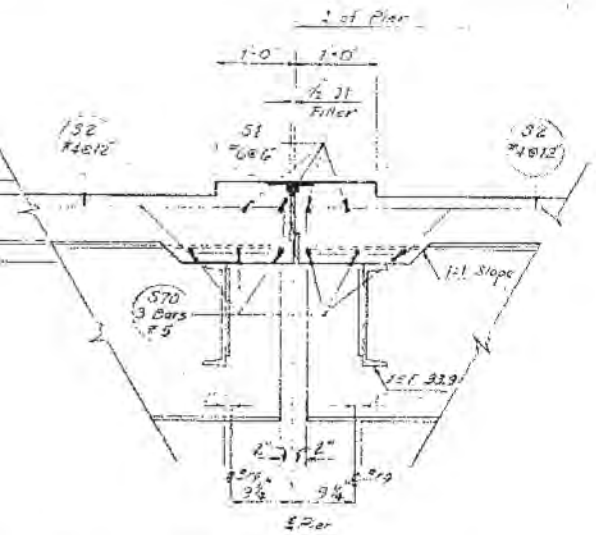


D JOINT DETAIL @ BENT

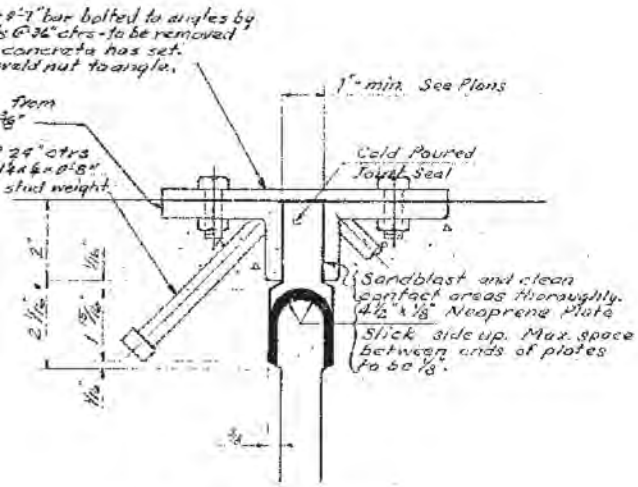


DETAIL "A"

| MID SPANS | | |
|---|---|---|
| 55 | 6 | 4 |
| 11 | 6 | 6 |
| 21 | 6 | 2 |
| 11 | 6 | 2 |
| 56 | 6 | 4 |

CTOR SPACING

NOTE:

1. Shear Pitch is @ Center of Brg Increasing To Max. Pitch @ Center of Span. Begin & End Pitch of Shear Connectors @ Center of Brg. The Spacing Shown is For Studs And Channels.
2. Shear Connector Payment is Based On Weight of The Stud Connector. Channel Connectors Developing The Same Shear As The Studs May Be Used As An Alternate.

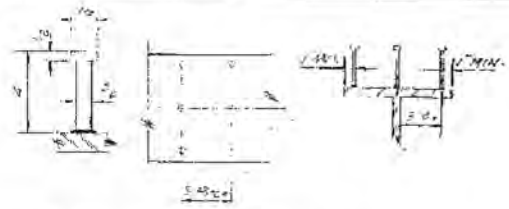


STUD DETAILS

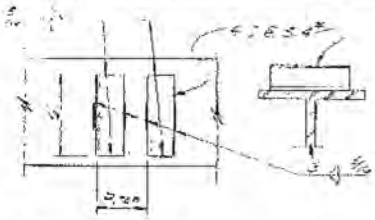

CHANNEL DETAILS

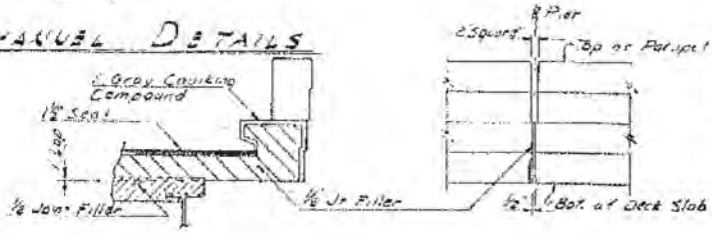


FIXED JOINT CURB DETAIL

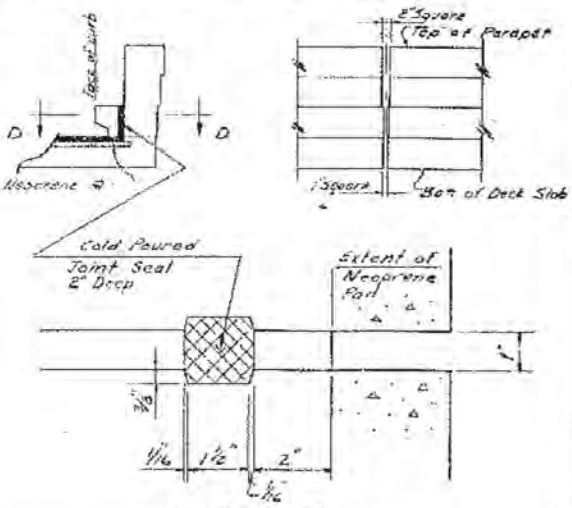


Section "D-D"

EXPANSION JOINT CURB DETAIL

UTAH STATE DEPARTMENT OF HIGHWAYS
SALT LAKE CITY, UTAH
STRUCTURES DIVISION

LEHI-PROVO
AMERICAN FORK 1ST EAST OVERPASS
DETAILS

| | | |
|---|---|---|
| DESIGNED BY J.R.N. | CHECKED BY | 7-15-6 (13) 221 PROJECT NUMBER |
| DRAWN BY T.R.P. | CHECKED BY H.O.O. | END CONTR. |
| QUANTITIES BY | CHECKED BY | 294+02.678 STATION |
| APPROVAL RECOMMENDED BY | GROUP LEADER | |
| APPROVED Aug. 3, 1962 DATE | DIV. STRUCTURAL ENGR. | UTAH COUNTY |
| BR. NO. | DWG NO. C-346 | 1 OF 12 |

STRUCTURE 1-N

# BILL OF REINFORCIN

## SLAB REINFORCEMENT

| MARK | SIZE | LGTH. | NO. REQ. | TOTAL LENGTH | TYPE | A | B | C | D | E | F | G | H | J | K | O |
|---|---|---|---|---|---|---|---|---|---|---|---|---|---|---|---|---|
| S-1 | #6 | 36'-3" | 24 | 870'-0" | 1 | | | | | | | | | | | |
| S-2 | #4 | 6'-8" | 336 | 2016'-0" | 8 | 2'-8" | 10" | 1'-3" | 1'-3" | 1'-9" | 1'-2" | | | | | |
| S-3 | #6 | 1'-9" | 12 | 21'-0" | 1 | | | | | | | | | | | |
| S-4 | | 2'-6" | | 30'-0" | | | | | | | | | | | | |
| S-5 | | 3'-3" | | 39'-0" | | | | | | | | | | | | |
| S-6 | | 4'-1" | | 49'-0" | | | | | | | | | | | | |
| S-7 | | 4'-11" | | 59'-0" | | | | | | | | | | | | |
| S-8 | | 5'-8" | | 68'-0" | | | | | | | | | | | | |
| S-9 | | 6'-6" | | 78'-0" | | | | | | | | | | | | |
| S-10 | | 7'-4" | | 88'-0" | | | | | | | | | | | | |
| S-11 | | 8'-1" | | 97'-0" | | | | | | | | | | | | |
| S-12 | | 8'-11" | | 107'-0" | | | | | | | | | | | | |
| S-13 | | 9'-9" | | 117'-0" | | | | | | | | | | | | |
| S-14 | | 10'-6" | | 126'-0" | | | | | | | | | | | | |
| S-15 | | 11'-4" | | 136'-0" | | | | | | | | | | | | |
| S-16 | | 12'-2" | | 146'-0" | | | | | | | | | | | | |
| S-17 | | 12'-11" | | 155'-0" | | | | | | | | | | | | |
| S-18 | | 13'-9" | | 165'-0" | | | | | | | | | | | | |
| S-19 | | 14'-7" | | 175'-0" | | | | | | | | | | | | |
| S-20 | | 15'-4" | | 184'-0" | | | | | | | | | | | | |
| S-21 | | 16'-2" | | 194'-0" | | | | | | | | | | | | |
| S-22 | | 17'-0" | | 204'-0" | | | | | | | | | | | | |
| S-23 | | 17'-9" | | 213'-0" | | | | | | | | | | | | |
| S-24 | | 18'-7" | | 223'-0" | | | | | | | | | | | | |
| S-25 | | 19'-4" | | 232'-0" | | | | | | | | | | | | |
| S-26 | | 20'-2" | | 242'-0" | | | | | | | | | | | | |
| S-27 | | 21'-0" | | 252'-0" | | | | | | | | | | | | |
| S-28 | | 21'-9" | | 261'-0" | | | | | | | | | | | | |
| S-29 | | 22'-7" | | 271'-0" | | | | | | | | | | | | |
| S-30 | | 23'-5" | | 281'-0" | | | | | | | | | | | | |
| S-31 | | 24'-2" | | 290'-0" | | | | | | | | | | | | |
| S-32 | | 25'-0" | | 300'-0" | | | | | | | | | | | | |
| S-33 | | 25'-10" | | 310'-0" | | | | | | | | | | | | |
| S-34 | | 26'-7" | | 319'-0" | | | | | | | | | | | | |
| S-35 | | 27'-5" | | 330'-0" | | | | | | | | | | | | |
| S-36 | | 28'-3" | | 339'-0" | | | | | | | | | | | | |
| S-37 | | 29'-0" | | 348'-0" | | | | | | | | | | | | |
| S-38 | | 29'-10" | | 358'-0" | | | | | | | | | | | | |
| S-39 | | 30'-8" | | 368'-0" | | | | | | | | | | | | |
| S-40 | | 31'-5" | | 377'-0" | | | | | | | | | | | | |
| S-41 | | 32'-3" | | 387'-0" | | | | | | | | | | | | |
| S-42 | | 33'-0" | | 396'-0" | | | | | | | | | | | | |
| S-43 | | 33'-10" | | 406'-0" | | | | | | | | | | | | |
| S-44 | | 34'-8" | | 416'-0" | | | | | | | | | | | | |
| S-45 | | 35'-5" | | 426'-0" | | | | | | | | | | | | |
| S-46 | | 36'-3" | | 435'-0" | | | | | | | | | | | | |
| S-47 | | 37'-1" | | 445'-0" | | | | | | | | | | | | |
| S-48 | | 37'-10" | | 454'-0" | | | | | | | | | | | | |
| S-49 | | 38'-8" | | 464'-0" | | | | | | | | | | | | |
| S-50 | | 39'-6" | | 474'-0" | | | | | | | | | | | | |
| S-51 | | 40'-3" | | 483'-0" | | | | | | | | | | | | |
| S-52 | | 41'-1" | | 493'-0" | | | | | | | | | | | | |
| S-53 | | 41'-11" | | 503'-0" | | | | | | | | | | | | |
| S-54 | | 42'-8" | | 512'-0" | | | | | | | | | | | | |
| S-55 | | 43'-6" | | 522'-0" | | | | | | | | | | | | |
| S-56 | | 44'-4" | | 532'-0" | | | | | | | | | | | | |
| S-57 | | 45'-1" | | 541'-0" | | | | | | | | | | | | |
| S-58 | | 45'-11" | | 551'-0" | | | | | | | | | | | | |
| S-59 | | 46'-8" | | 560'-0" | | | | | | | | | | | | |
| S-60 | | 47'-6" | | 570'-0" | | | | | | | | | | | | |
| S-61 | | 48'-4" | | 580'-0" | | | | | | | | | | | | |
| S-62 | | 49'-1" | | 589'-0" | | | | | | | | | | | | |
| S-63 | | 49'-11" | | 599'-0" | | | | | | | | | | | | |
| S-64 | | 50'-8" | | 609'-0" | | | | | | | | | | | | |
| S-65 | | 51'-6" | | 618'-0" | | | | | | | | | | | | |
| S-66 | | 52'-4" | | 628'-0" | | | | | | | | | | | | |
| S-67 | | 53'-2" | | 638'-0" | | | | | | | | | | | | |
| S-68 | | 53'-11" | 12 | 647'-0" | | | | | | | | | | | | |
| S-69 | #6 | 54'-9" | 50 | 2737'-6" | 1 | | | | | | | | | | | |
| S-70 | #5 | 7'-0" | 126 | 966'-0" | 1 | | | | | | | | | | | |
| S-71 | #4 | 50'-6" | 206 | 10403'-0" | 1 | | | | | | | | | | | |
| S-72 | #4 | 49'-6" | 105 | 5058'-6" | 1 | | | | | | | | | | | |

NOTE: STEEL ON THIS SHEET IS FOR ONE STRUCTURE FOR THE TOTAL QUANTITY DOUBLE THIS AMOUNT.

| MARK | SIZE | LGTH. | NO. REQ. | TOTAL LENGTH | TYPE | A | B | C | D | E |
|---|---|---|---|---|---|---|---|---|---|---|
| **PARAPET REINFORCE** | | | | | | | | | | |
| DC-1 | #5 | 3'-5" | 248 | 1072'-0" | 22 | | 1'-0" | 2'-10½" | 3½" | 2'-7 |
| DC-2 | #5 | 3'-1" | 238 | 685'-0" | 21 | | 1'-3½" | 1'-8½" | | |
| DC-3 | #5 | 6'-0" | 30 | 180'-0" | 22 | | 0'-0 | 2'-10½" | 3½" | 2'-7 |
| DC-4 | #5 | 5'-7" | 4 | 22'-4" | 22 | | 0'-0 | 2'-8½" | 8" | 2'-5 |
| DC-5 | #5 | 4'-10" | 4 | 19'-4" | 22 | | 0'-0 | 2'-5½" | 8" | 2'-2 |
| DC-6 | #4 | 51'-5" | 28 | 1439'-8" | 1 | | | | | |
| DC-7 | #4 | 49'-3" | 14 | 689'-6" | 1 | | | | | |
| DC-8 | #4 | 12'-3" | 18 | 220'-6" | 1 | | | | | |
| DC-9 | #4 | 9'-7" | 18 | 172'-6" | 1 | | | | | |
| **APPROACH SLAB REINFOR** | | | | | | | | | | |
| AS-1 | 8 | 19'-0" | 24 | 456'-0" | 1 | | | | | |
| AS-2 | #7 | 2'-3" | 4 | 9'-0" | | | | | | |
| AS-3 | | 3'-1" | | 12'-4" | | | | | | |
| AS-4 | | 3'-10" | | 15'-4" | | | | | | |
| AS-5 | | 4'-8" | | 18'-8" | | | | | | |
| AS-6 | | 5'-6" | | 22'-0" | | | | | | |
| AS-7 | | 6'-3" | | 25'-0" | | | | | | |
| AS-8 | | 7'-1" | | 28'-4" | | | | | | |
| AS-9 | | 7'-11" | | 31'-8" | | | | | | |
| AS-10 | | 8'-8" | | 34'-8" | | | | | | |
| AS-11 | | 9'-6" | | 38'-0" | | | | | | |
| AS-12 | | 10'-4" | | 41'-4" | | | | | | |
| AS-13 | | 11'-2" | | 44'-8" | | | | | | |
| AS-14 | | 12'-0" | | 48'-0" | | | | | | |
| AS-15 | | 12'-10" | | 51'-4" | | | | | | |
| AS-16 | #7 | 13'-5" | 4 | 54'-8" | | | | | | |
| AS-17 | #7 | 14'-6" | 168 | 2436'-0" | 1 | | | | | |
| AS-18 | #4 | 2'-0" | 70 | 140'-0" | 1 | | | | | |
| AS-19 | #5 | 50'-6" | 60 | 3030'-0" | 1 | | | | | |
| AS-20 | #5 | 19'-5" | 60 | 1100'-0" | | | | | | |
| AS-21 | #5 | 19'-0" | 8 | 152'-0" | | | | | | |
| AS-22 | #5 | 2'-3" | 4 | 9'-0" | | | | | | |
| AS-23 | | 3'-6" | | 15'-0" | | | | | | |
| AS-24 | | 4'-8" | | 18'-8" | | | | | | |
| AS-25 | | 5'-11" | | 23'-8" | | | | | | |
| AS-26 | | 7'-2" | | 28'-8" | | | | | | |
| AS-27 | | 8'-4" | | 33'-4" | | | | | | |
| AS-28 | | 9'-7" | | 38'-4" | | | | | | |
| AS-29 | | 10'-10" | | 43'-4" | | | | | | |
| AS-30 | | 12'-0" | | 48'-0" | | | | | | |
| AS-31 | #5 | 13'-3" | 4 | 53'-0" | | | | | | |
| AS-32 | #5 | 14'-0" | 114 | 1653'-0" | 1 | | | | | |
| **BENT REINFORCEM** | | | | | | | | | | |
| B-1 | #3 | 20'-3" | 50 | 1010'-6" | 1 | | | | | |
| B-2 | | 16'-6" | 20 | 330'-0" | 1 | | | | | |
| B-3 | | 18'-6" | 10 | 185'-0" | 4 | | 0'-2½" | 16'-6" | | |
| B-4 | | 19'-1" | 10 | 190'-10" | 4 | | 2'-9½" | 16'-6" | | |
| B-5 | #4 | 7'-9" | 40 | 310'-0" | 6 | | 3'-0" | 4'-0" | 3½" | 1 |
| B-6 | #5 | 24'-6" | 16 | 408'-0" | 1 | | | | | |
| B-7 | #5 | 20'-0" | 8 | 160'-0" | 1 | | | | | |
| B-8 | #4 | 3'-3" | 48 | 156'-0" | 1 | | | | | |
| B-9 | | 14'-2" | 4 | 56'-8" | 12 | 5 | 3'-5" | 3'-6" | 3'-3" | 3 |
| B-10 | | 13'-2" | 4 | 52'-8" | | | | 2'-11" | | 2 |
| B-11 | | 12'-0" | 4 | 48'-0" | | | | 2'-4" | | 2 |
| B-12 | #4 | 14'-8" | 46 | 604'-0" | 12 | 5 | 3'-5" | 3'-8 | 3'-5" | 3 |
| **BENT COLUMN** | | | | | | | | | | |
| BC-1 | #9 | 19'-9" | 128 | 2528'-0" | 4 | | 1'-0" | 19'-0" | | |
| BC-2 | #3 | 11'-1" | 120 | 1330'-0" | 12 | 4 | 2'-8" | 2'-8" | 2'-8" | 2 |
| BC-3 | #3 | 7'-11" | 120 | 950'-0" | 12 | 4 | 1'-10½" | 1'-10½" | 1'-10½" | 1 |
| **BENT FOOTING** | | | | | | | | | | |
| BF-1 | #9 | 8'-0" | 128 | 1024'-0" | 4 | | 6'-0" | 1'-0" | | |
| BF-2 | 4 | 28'-0" | 144 | 3512'-0" | 1 | | | | | |
| BF-3 | 4 | 5'-6" | 480 | 2640'-0" | 1 | | | | | |

DGN Files 1P_PwPodes\16721\4433_C-046-18_Form1pod.dgn
02-MAY-2005

G STEEL

| F | G | H | J | K | O |
|---|---|---|---|---|---|
| MENT | | | | | |
| | | 3'2" | | | |
| | | 12" | | 12" | |
| | | 3'2" | | | |
| | | 3'2" | | | |
| | | 3'2" | | | |
| CEMENT | | | | | |
| ENT | | | | | |

## ABUTMENT & FOOTING

| MARK | SIZE | LGTH. | NO. REQ. | TOTAL LENGTH | TYPE | A | B | C | D | E | F | G | H | J | K | O |
|---|---|---|---|---|---|---|---|---|---|---|---|---|---|---|---|---|
| A-1 | #5 | 40'-0" | 12 | 480'-0" | 1 | | | | | | | | | | | |
| A-2 | #5 | 31'-8" | 12 | 381'-0" | 1 | | | | | | | | | | | |
| A-3 | #5 | 7'-5" | 73 | 541'-5" | 5 | | 3'-4" | 2" | 3'-4" | | | | | | | |
| A-4 | #5 | 8'-7" | 73 | 626'-7" | 5 | | 3'-11" | 2" | 3'-11" | | | | | | | |
| AF-1 | #8 | 40'-0" | 16 | 640'-0" | 1 | | | | | | | | | | | |
| AF-2 | | 31'-9" | 16 | 405'-0" | | | | | | | | | | | | |
| AF-3 | | 40'-0" | 18 | 720'-0" | | | | | | | | | | | | |
| AF-4 | | 35'-0" | 18 | 630'-0" | | | | | | | | | | | | |
| AF-5 | | 15'-7" | 18 | 280'-6" | | | | | | | | | | | | |
| AF-6 | #8 | 10'-11" | 18 | 196'-6" | | | | | | | | | | | | |
| AF-7 | #5 | 5'-5" | 100 | 541'-8" | | | | | | | | | | | | |
| AF-8 | | 2'-0" | 48 | 96'-0" | 1 | | | | | | | | | | | |
| AF-9 | | 3'-8" | 72 | 264'-0" | 4 | | 0'-6" | 3'-3" | | | | | | | | |
| AF-10 | #5 | 4'-6" | 72 | 324'-0" | 4 | | 1'-0" | 3'-7" | | | | | | | | |
| AF-11 | #4 | 4'-3" | 36 | 153'-0" | 4 | | 1'-4" | 3'-0" | | | | | | | | |
| AF-12 | | 4'-10" | 36 | 174'-0" | 4 | | 1'-11" | 3'-0" | | | | | | | | |
| AF-13 | | 3'-2" | 36 | 114'-0" | 4 | | 0'-6" | 2'-8" | | | | | | | | |
| AF-14 | #4 | 4'-0" | 36 | 144'-0" | 4 | | 0'-6" | 3'-7" | | | | | | | | |
| AF-15 | #4 | 15'-10" | 84 | 1288'-4" | 12 | 0'-5" | 5'-2" | 2'-6" | 5'-2" | 2'-6" | | | | | | |

## ABUTMENT WINGWALL

| MARK | SIZE | LGTH. | NO. REQ. | TOTAL LENGTH | TYPE | A | B | C | D | E | F | G | H | J | K | O |
|---|---|---|---|---|---|---|---|---|---|---|---|---|---|---|---|---|
| AW-1 | #5 | 4'-5" | 70 | 310'-10" | 1 | | | | | | | | | | | |
| AW-2 | | 5'-5" | 50 | 270'-10" | 1 | | | | | | | | | | | |
| AW-3 | | 10'-0" | 47 | 470'-0" | 1 | | | | | | | | | | | |
| AW-4 | | 4'-0" | 24 | 96'-0" | 1 | | | | | | | | | | | |
| AW-5 | | 6'-3" | 30 | 187'-6" | 1 | | | | | | | | | | | |
| AW-6 | | 1'-4" | 4 | 5'-4" | 1 | | | | | | | | | | | |
| AW-7 | | 1'-10" | 4 | 7'-4" | 1 | | | | | | | | | | | |
| AW-8 | | 8'-11" | 6 | 53'-6" | 23 | | 6'-0" | 1'-6" | 1 | 4 | | | 3 | | 4 | |
| AW-9 | | 8'-6" | 6 | 51'-0" | 23 | | 5'-7" | 1'-6" | 1 | 4 | | | 3 | | 4 | |
| AW-10 | | 4'-11" | 6 | 29'-6" | 23 | | 2'-0" | 1'-6" | 2 | 1 | | | 5 | | 2 | |
| AW-11 | #5 | 5'-2" | 6 | 31'-0" | 23 | | 2'-4" | 1'-6" | 2 | 1 | | | 5 | | 2 | |

UTAH

BAR TYPES

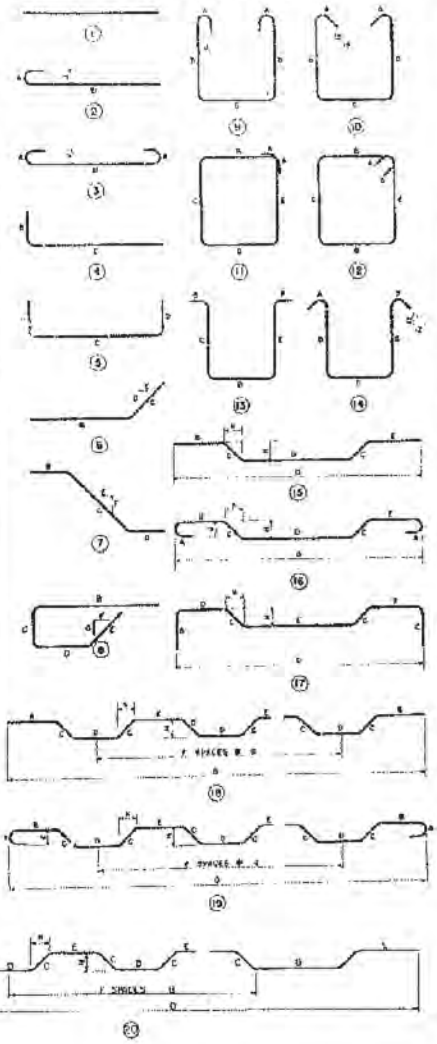

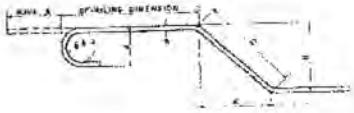

HOOK DETAIL

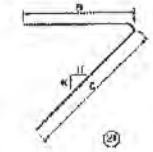

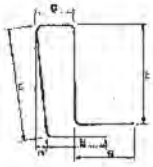

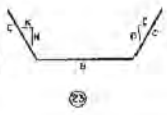

REGISTERED PROFESSIONAL ENGINEER NO. 2164 L. R. NEWVILLE STATE OF UTAH

### GENERAL NOTES

1. All placing drawings, detailing, and fabrication shall be in accordance with the "Manual of Standard Practice for Detailing Reinforced Concrete Structures (ACI 315-57)".
2. All dimensions shown for bar bending details are out-to-out of bars.

DESIGN AND DRAWING BY
WESTERN ENGINEERS, INC. AND
EDWARDS AND KELCEY
CONSULTING ENGINEERS

SUBMITTED BY L. R. Newville CHIEF ENGINEER
UTAH ENG'R REG. NO. 2164

SHEET 10 OF 12 SHEETS

UTAH STATE ROAD COMMISSION
SALT LAKE CITY, UTAH
BRIDGE DEPARTMENT

AMERICAN FORK 1ST EAST OVERPASS
156'-7 1/2" TO O. 50° XING ∠
STA 294+02.678 I-15-6(32)271 2146 CONTR.
I.E.H.I.-PROVO UTAH COUNTY

DESIGNED BY L.A.K. DATE
DRAWN BY D.H.S. INSPECTED Aug. 3, 1962
TRACED BY APPROVED D. L. Sargent CHIEF BRIDGE ENGINEER
CHECKED BY L.A.K. L.R.N.

DR. NO. DWG. NO. C-348

FOR INFORMATION ONLY

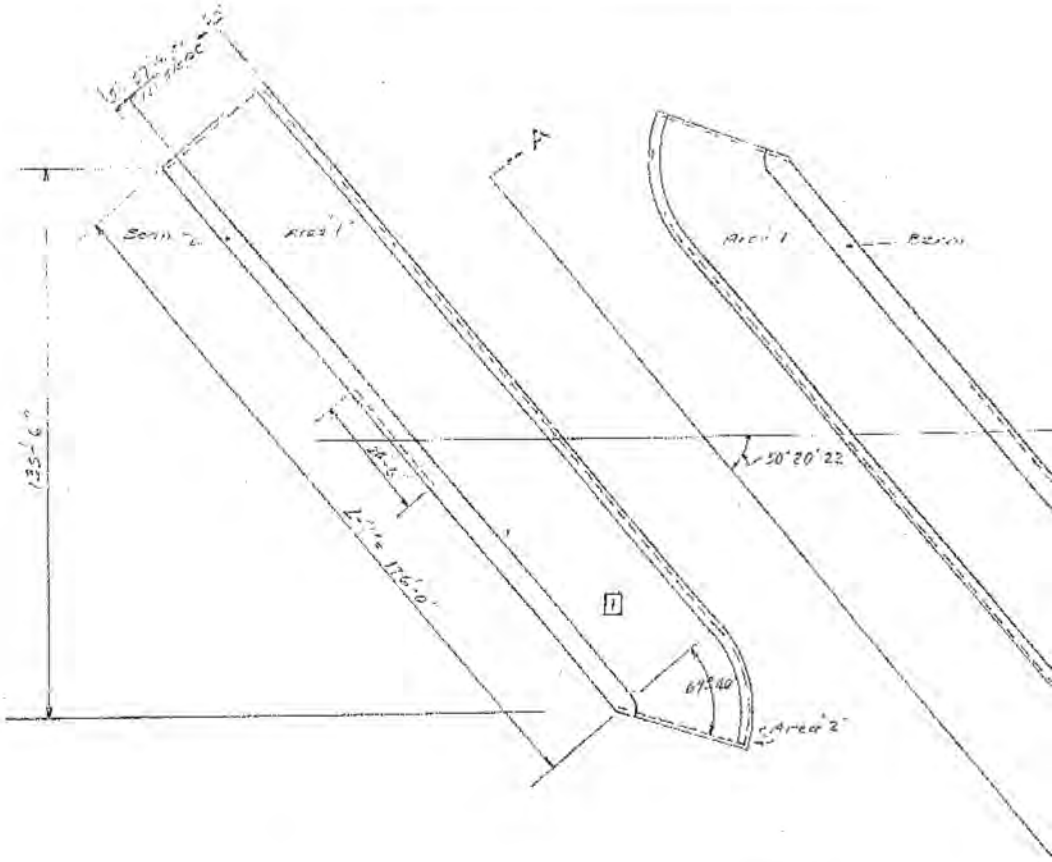
A
Berm
Area 1
Area 1
Berm
135'-6"
50°20'22"
176'-0"
67°40'
Area 2
PLAN

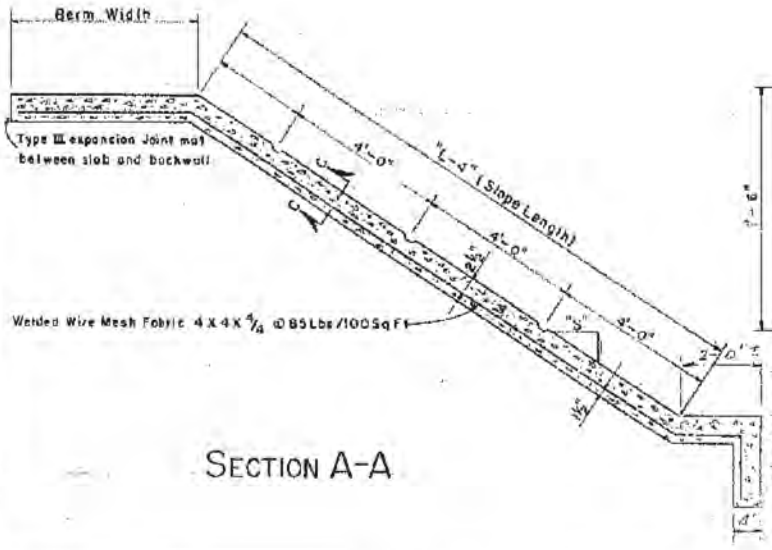
Berm Width
Type III expansion Joint mat between slab and backwall
4'-0"
"L" 4" (Slope Length)
4'-0"
4'-0"
Welded Wire Mesh Fabric 4 X 4 X 4/4 @ 85 Lbs/100 Sq Ft
SECTION A-A
SECTION B-B
Note: Not included in exposed area.

Place Constructio

FO

## LIST OF REQUIRED REINF. CONC. SLOPE PROTECTION

| LOC. No | BERM WIDTH | SKEW θ | LENGTH "L-1" | LENGTH "L-2" | LENGTH "L-3" | LENGTH "L-4" (1) | AREA "1" | AREA "2"+"3" | QUANTITY SQ. YD. (2) |
|---|---|---|---|---|---|---|---|---|---|
| 1 | [illegible] | [illegible] | [illegible] | | | [illegible] | [illegible] | [illegible] | [illegible] |
| 2 | | | | | | [illegible] | [illegible] | [illegible] | [illegible] |
| 3 | | | | | | | | | |
| 4 | | | | | | | | | |
| | | | | | | | | | [illegible] |

### NOTE

1- (1) Average length - Slope + Berm + 2'-0" Flat
2- (2) Approximate Exposed areas (Area "1" & Area "2" + "3")
3- All areas are square yard areas.

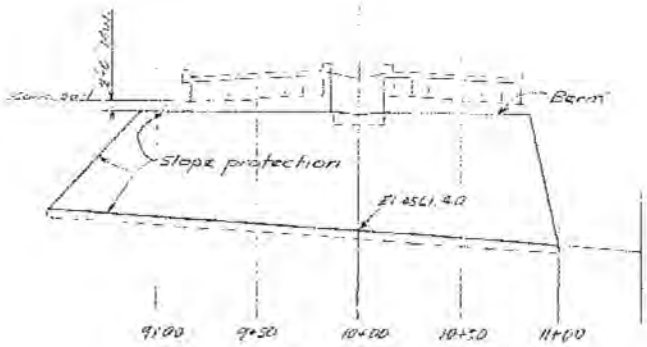


SECTION A-A

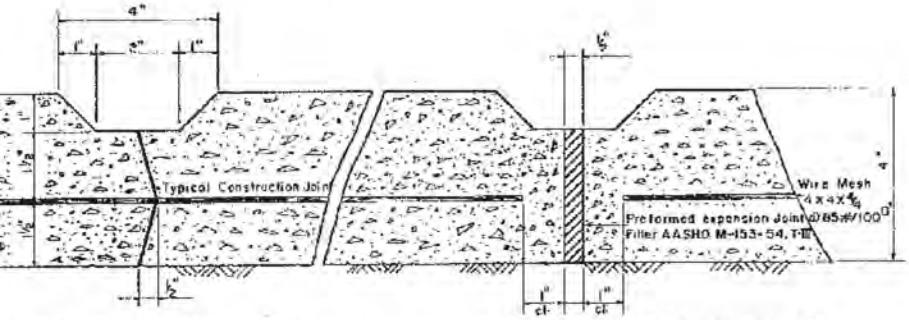


n Joints as needed in placing conc slab. Place vertical expansion joints at 40'-0" maximum spacing in slab

SECTION C-C

SECTION D-D

Slab to be Scored in 4'-0" X 8'-0" Sections

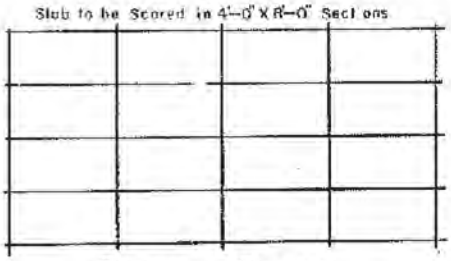

SCORING DETAIL

UTAH STATE DEPARTMENT OF HIGHWAYS
SALT LAKE CITY, UTAH
STRUCTURES DIVISION

LEHI - PROVO
AMERICAN FORK 1st EAST OVERPASS
REINF. CONC. SLOPE PROTECTION

| | | |
|---|---|---|
| DESIGNED BY | CHECKED BY | I-15-6 (10) 274 — PROJECT NUMBER — 2ND CONTR. |
| DRAWN BY LBL | CHECKED BY | |
| QUANTITIES BY | CHECKED BY | 2947 02 L8 — STATION |
| APPROVAL RECOMMENDED BY | DATE / LA ENGR | |
| APPROVED Aug. 3, 1962 | D. L. Sorensen, STATE HIGHWAY ENGINEER | UTAH — COUNTY |
| | DWG. NO. C-346 | 11 OF 12 |

| NO. | BY | DATE | REMARKS |
|---|---|---|---|
| | | | REVISIONS |

OF-SP-2

OR INFORMATION ONLY

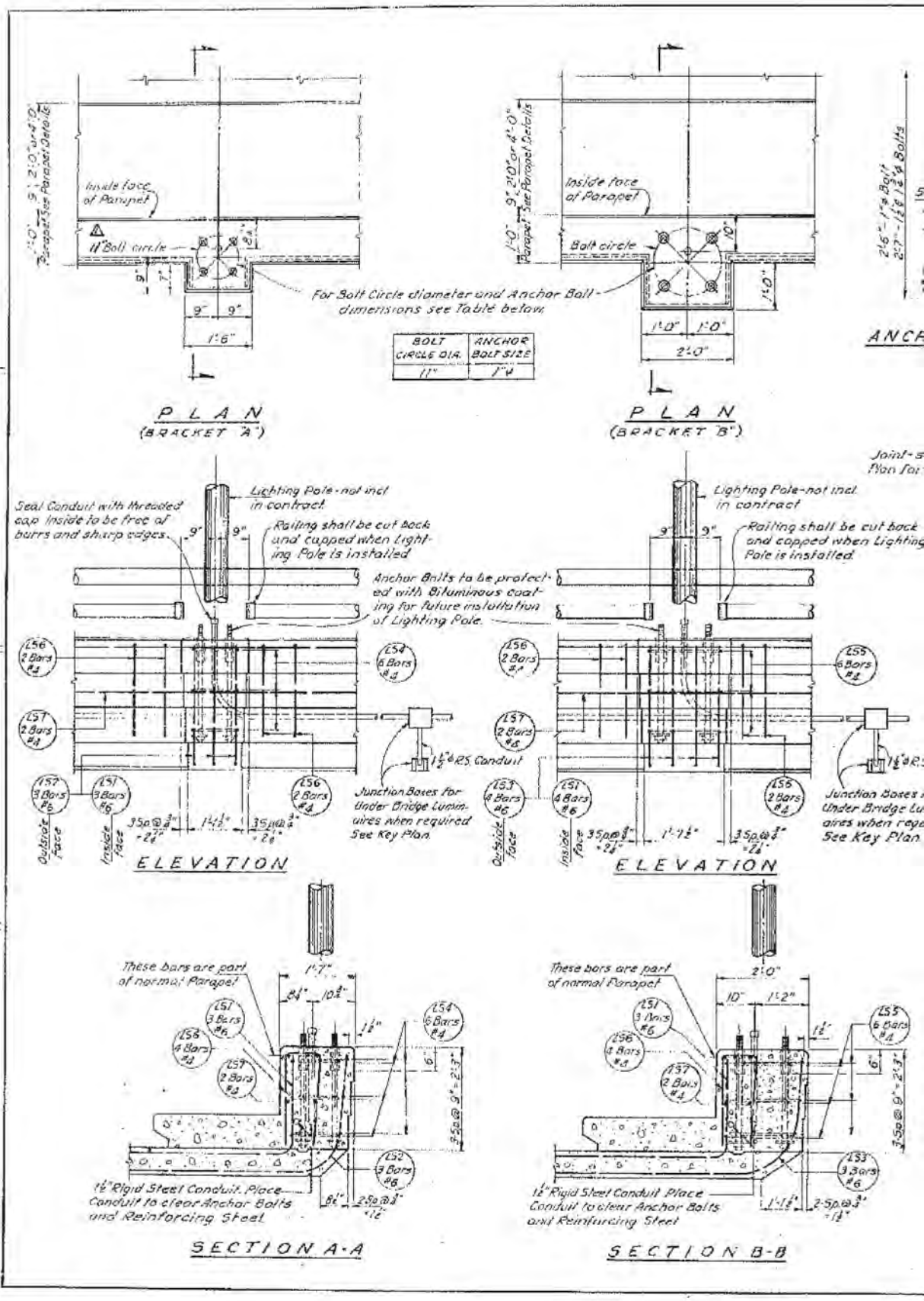
Inside face of Parapet
11" Bolt circle
For Bolt Circle diameter and Anchor Bolt dimensions see Table below
BOLT CIRCLE DIA. | ANCHOR BOLT SIZE
11" | 1"Ø
PLAN (BRACKET "A")
PLAN (BRACKET "B")
Lighting Pole - not incl. in contract
Seal Conduit with threaded cap inside to be free of burrs and sharp edges.
Railing shall be cut back and capped when Lighting Pole is installed
Anchor Bolts to be protected with Bituminous coating for future installation of Lighting Pole.
Junction Boxes for Under Bridge Luminaires when required See Key Plan
ELEVATION
These bars are part of normal Parapet
1½" Rigid Steel Conduit. Place Conduit to clear Anchor Bolts and Reinforcing Steel
SECTION A-A
SECTION B-B

FOR IN

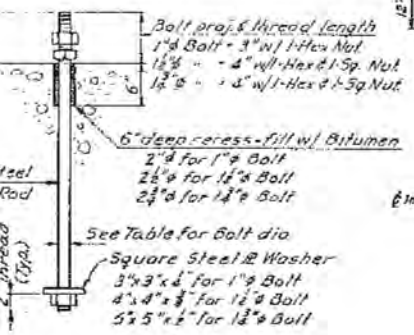


OR BOLT DETAIL

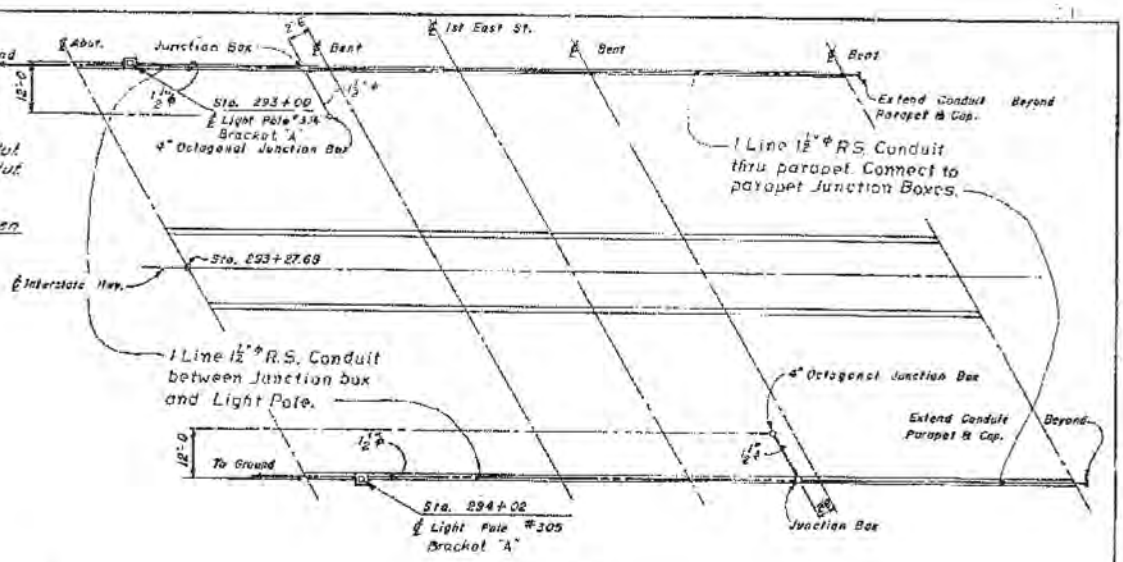


KEY PLAN
NOT TO SCALE

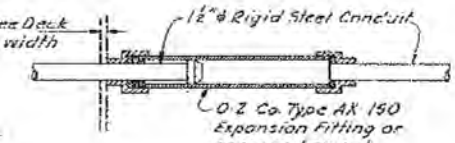


EXPANSION FITTING DETAIL

Note

Light Pole stationing, if shown, is approximate. Pole Mounting Bracket shall be located midway between railing posts nearest the station indicated.

STEEL SCHEDULE - POLE SUPPORT

| MARK | SIZE | LENGTH | AMT | SKETCH |
|---|---|---|---|---|
| LS1 | 6 | 5'-2" | 6 | 1'-10" 1'-10" 4" R |
| LS2 | 6 | 6'-1" | 6 | 3'-8" 11" R 2½" |
| LS3 | 6 | 6'-4" | - | 3'-8" 1'-3" R 2½" |
| LS4 | 4 | 3'-3" | 12 | LS4 - 1'-1" LS5 - 1'-6" |
| LS5 | 4 | 4'-8" | - | |
| LS6 | 4 | 4'-11" | 8 | 2'-1" 12" 9" |
| LS7 | 4 | 9'-6" | 4 | |

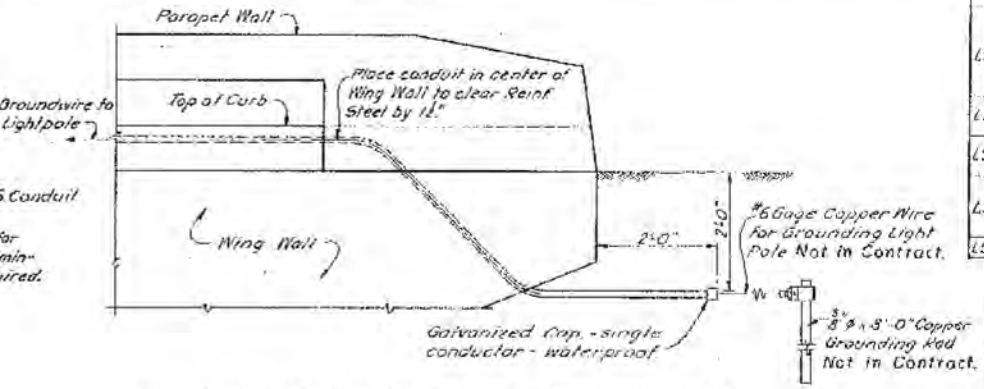


CONDUIT TERMINATION AT WING WALLS

GENERAL NOTES

1. Rigid Steel Conduit, threaded and galvanized, shall conform to Federal Specifications WW-C-581c
2. Conduit Expansion Fittings shall be installed where ever conduit crosses structure expansion joints
3. Conduit shall terminate at junction boxes with double lock nuts and insulated grounding type bushings. Bushings shall be O-Z Co. Type BL or approved equal. All conduit shall be bonded in boxes with bare #6 AWG Copper wire.
4. All work shall conform to the latest Edition of the National Electrical Code.
5. See Special Provisions for Electrical Work - Bridges.

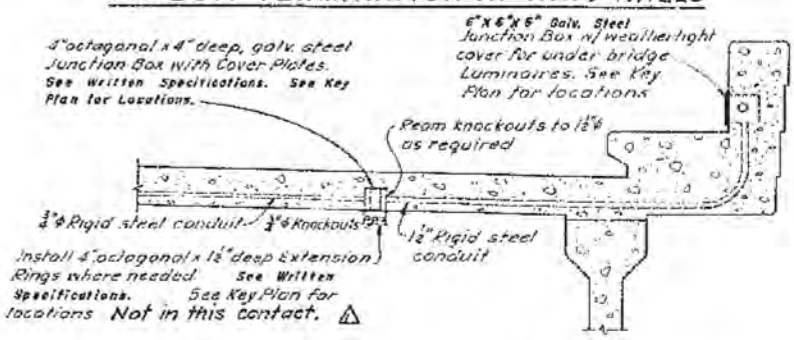


DETAILS FOR FUTURE SUSPENDED UNDERPASS LUMINAIRES

△ 4/8/77 11" B.C. added
REMARKS
REVISIONS

UTAH STATE DEPARTMENT OF HIGHWAYS
SALT LAKE CITY, UTAH
STRUCTURES DIVISION
LEHI TO PROVO
AMERICAN FORK 1st EAST OVERPASS
ELECTRICAL WORK BRIDGES

| | | |
|---|---|---|
| DESIGNED BY | CHECKED BY | I-15-6(13)271 2nd Crossing |
| DRAWN BY J.H.O. | CHECKED BY | PROJECT NUMBER |
| QUANTITIES BY | CHECKED BY | 294 + 02.618 |
| REVISED BY | GROUP LEADER | STATION |
| RECOMMENDED BY | | UTAH |
| APPROVED DATE | CHIEF ENGINEER | COUNTY |
| DWG. NO. 1-N | DWG. NO. C-346 | 12a of 12 |

**NFORMATION ONLY**

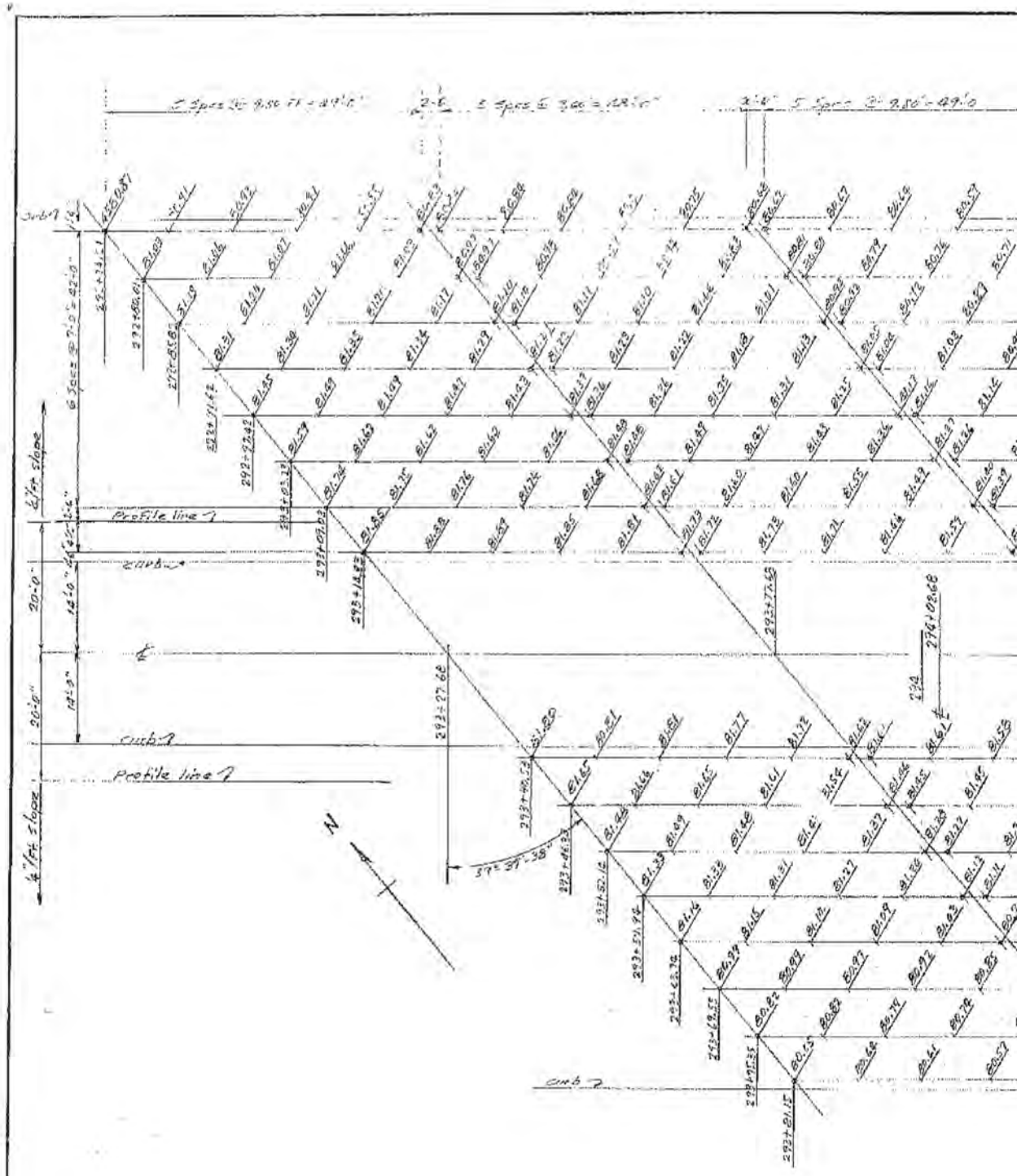


**FOR INFORMATION ONLY**

[redacted]

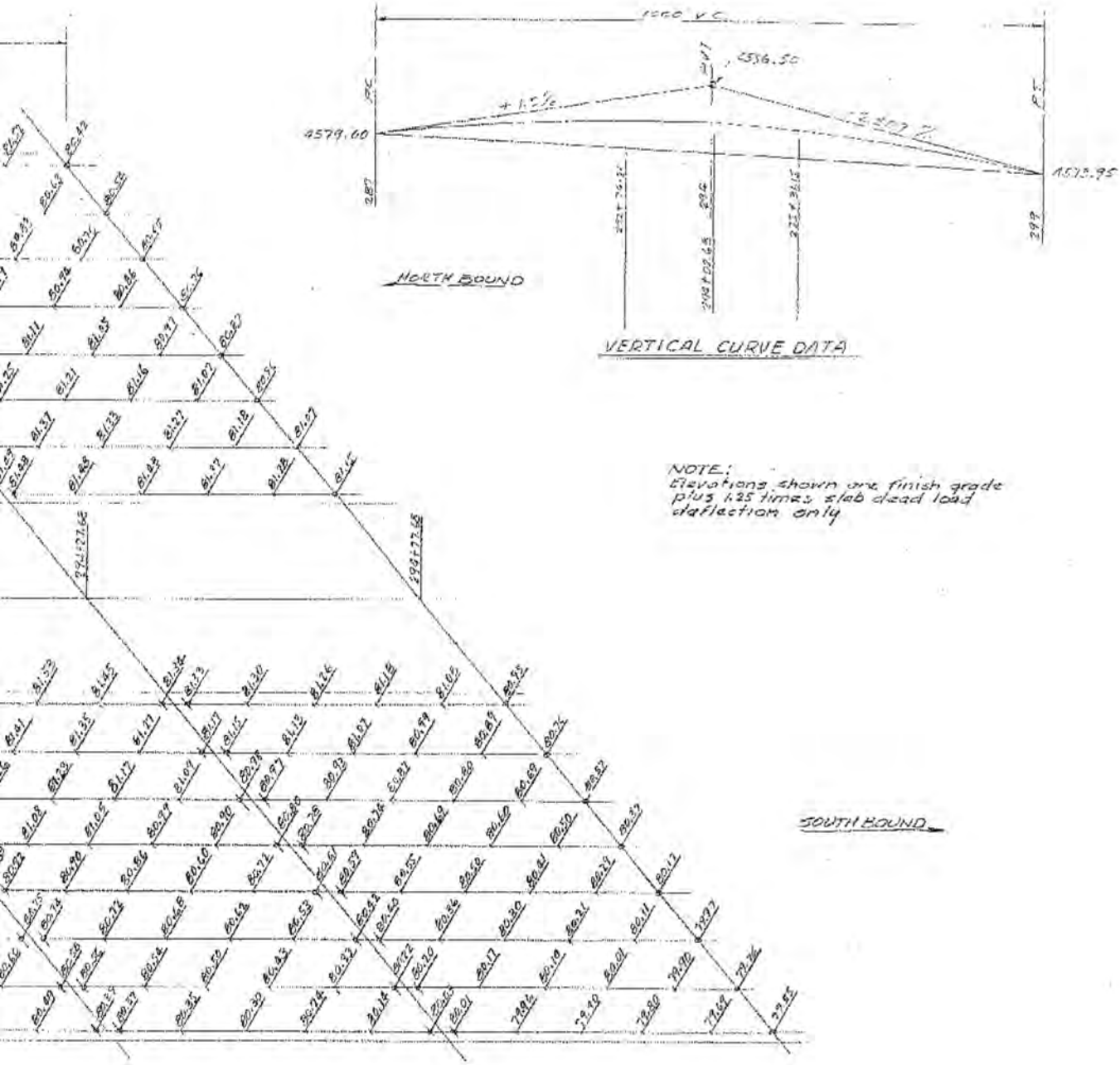


VERTICAL CURVE DATA

NOTE:
Elevations shown are finish grade plus 1.25 times slab dead load deflection only

| | | | |
|---|---|---|---|
| UTAH STATE DEPARTMENT OF HIGHWAYS<br>SALT LAKE CITY, UTAH<br>STRUCTURES DIVISION | | | |
| AMERICAN FORK 1ST EAST OVERPASS<br>SCREED ELEVATIONS | | | |
| DESIGNED BY | CHECKED BY LEW | I-(5-6 03) 271 | 2 NO CENTR |
| DRAWN BY LEW | CHECKED BY | PROJECT NUMBER | |
| QUANTITIES BY | CHECKED BY | 299+02.68 | |
| APPROVAL RECOMMENDED BY | GROUP LEADER | STATION | |
| APPROVED Aug. 3, 1967 | D.L. Sargent CHIEF STRUCTURAL ENGINEER | UTAH | |
| | | COUNTY | |
| BR. NO. | DWG. NO. C-346 | 12 OF 12 | |

| NO. | BY | DATE | REMARKS |
|---|---|---|---|
| | | | |

REVISIONS

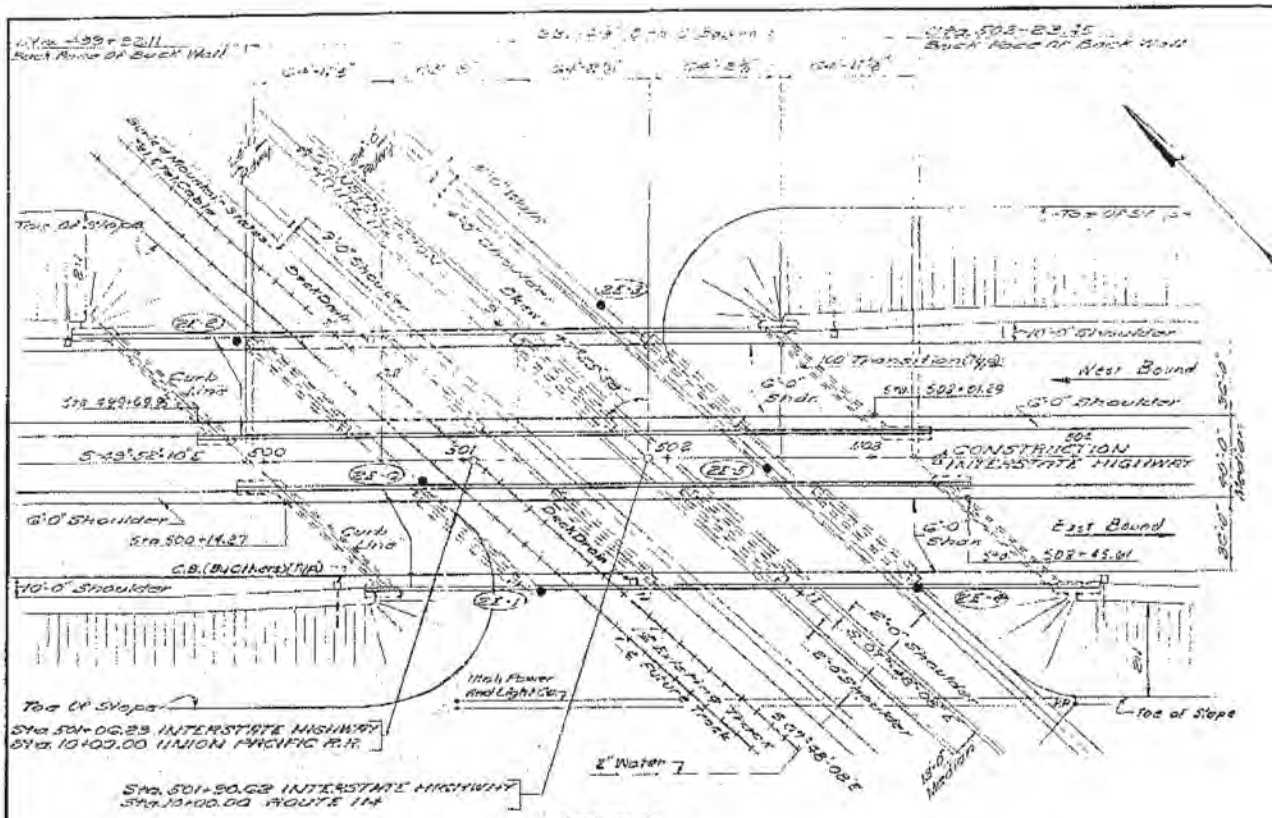


KEY PLAN

SCALE: 1" = 40'

**FOR INFORMATION ONLY**

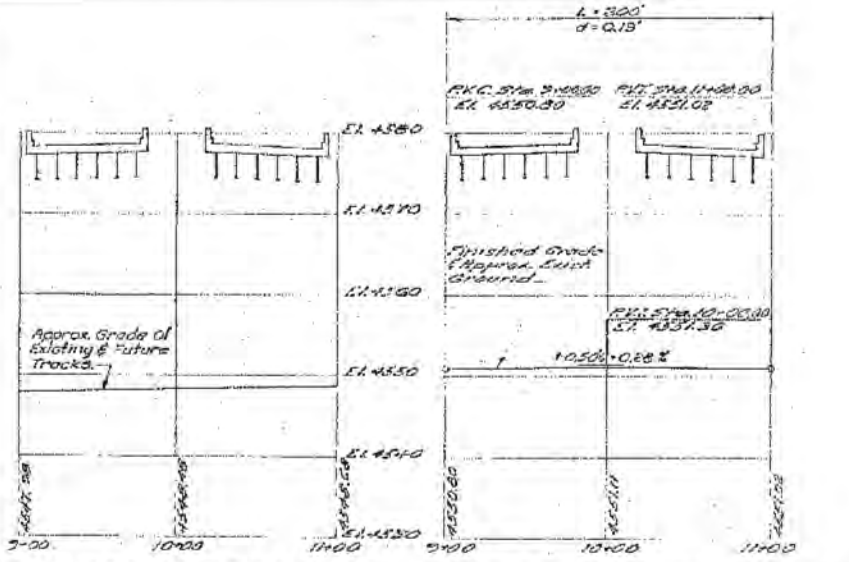


UNION PACIFIC R.R. PROFILE

SCALE: 1" = 10' VERT.
1" = 50' HOR.

STATE ROUTE 114 PROFILE

SCALE: 1" = 10' VERT.
1" = 50' HOR.

DESIGN SPECIFICATIONS:
A.A.S.H.O. Standard Sp

CONSTRUCTION SPECIFIC
Materials, Construct
State Standard Specific
And Supplements Thereto

LIVE LOAD:
H20-S16-44 Interstate
Revisions of 1961

ALLOWABLE STRESSES:
Structural Steel
Reinforcing Steel
f'c-Cast-in-Place Concre
f'c-Ultimate Compressive

STRUCTURAL STEEL:
Unless Otherwise Not
A-7

CONCRETE:
Class A (HE) Concrete Wi

REINFORCEMENT:
All Reinforcing Steel
To A.S.T.M. Designation
Designation A-305.

REINFORCEMENT COVER:
Reinforcement Shall
Concrete Covering Over
And Plane Surface Adjac
All Cases 1".

CHAMFERS:
Exposed Concrete Or
Otherwise Noted Edges
Unless Otherwise Noted.

FOUNDATION:
Foundations May Be A
Construction.

SCALES: All scales shown

DATUM:
All Elevations Refer To
Level Datum of 1929.

BENCH MARK:

SHOP DRAWINGS: All Shop Dr

| FED. ROAD DIST. NO. | STATE | FED. AID PROJ. NO. | FISCAL YEAR | SHEET NO. | TOTAL SHEETS |
|---|---|---|---|---|---|
| 0 | UTAH | I-15 6(29)219 | FOR INFO ONLY | 5 | 7 |

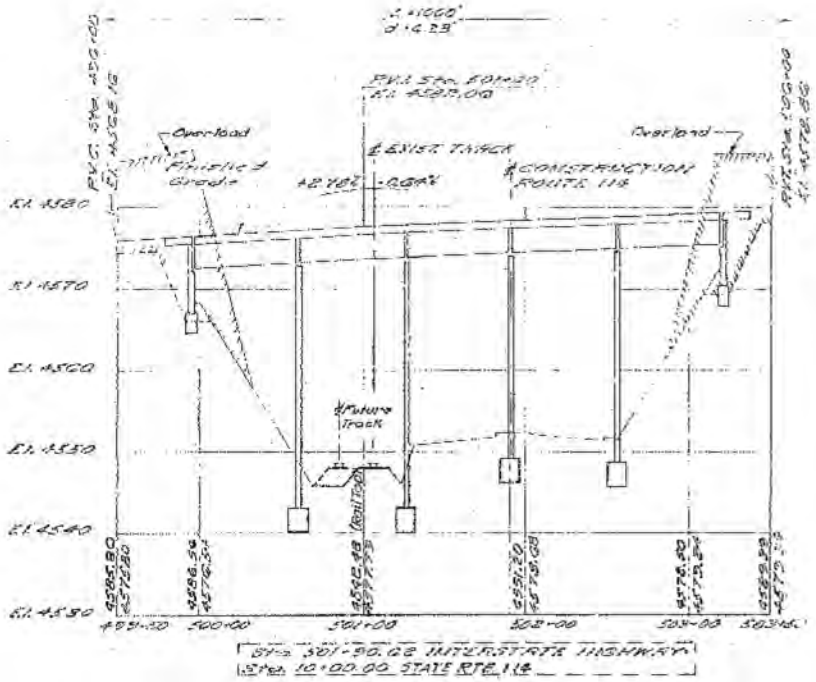


## INTERSTATE HIGHWAY PROFILE

SCALE: 1" = 10' VERT
1" = 50' HOR.

## ESTIMATE OF QUANTITIES
## 2-STRUCTURES

| NO. | ITEM | | QUANTITIES |
|---|---|---|---|
| | EXCAVATION FOR STRUCTURES (UNCL.) | | 2313.95 2450 Cu. Yds. |
| | CONCRETE CLASS A (A.F.) | 2517.32 | 2,510 Cu Yds |
| | REINFORCING STEEL | 417,906.67 | 412,004 Lbs (3) |
| | STRUCTURAL STEEL | 873,451.54 | 854,850 Lbs (3) |
| | 6" PERF. C.M.P. UNDERDRAIN | 448 | 450 Lin. Ft. |
| | ALUMINUM HANDRAIL (SINGLE RAIL) | | 1,470 Lin Ft. |
| | 3" RIGID STEEL CONDUIT | 724 | 750 Lin Ft. |
| | TEST PITS | 21.11 | 100 Cu. Yds. |

## GENERAL NOTES

ecification For Highway Bridges, 1961 Edition.

RTIONS"
ion And Workmanship Shall Be In Accordance With The
ations For Road And Bridge Construction, 1960 Edition
Which Line In Effect At Date Of Request For Bids

Alternate Loading In Accordance With A.A.S.H.O. Spec-

| | |
|---|---|
| | 18,000 p.s.i. |
| ds In Compression | 20,000 p.s.i. |
| e Strength | 1,200 p.s.i. |
| | 3,000 p.s.i. |

nd Structural Steel Shall Conform To A.S.T.M. Designation"

n Type II Low Alkali Cement Shall Be Used Throughout

Bars Shall Be New Billet Steel, Intermediate Grade, Conforming
JB And Shall Have Deformations Conforming To A.S.T.M.

Be Accurately Placed In The Forms To Provide The Following
Reinforcement, Unless Otherwise Specified, Abutments
inst Earth 2" Concrete Above Ground 2" Deck Concrete !

Substructure Shall Have 1½" Chamfers And 1½" Fillets Unless
f Concrete Deck And Sidewalks Shall Have ¾" Chamfers & ¼" Fillets
posed Corners or open joints and joint filler beveled ¼ or rounded.

tions, If Necessary, To Suit Conditions Encountered In

ly To Full Size Original Drawings Only.

United States Coast And Geodetic Survey Main Scale

owings Shall Be Approved Before Fabrication Of Steel.

## INDEX OF SHEETS

| SHEET NUMBER | DESCRIPTION |
|---|---|
| 1 | KEY PLAN & INDEX SHEET |
| 2-3 | DECK PLAN & ELEVATION |
| 4-5 | BORING LOGS |
| 6 | ABUTMENT FOUNDATIONS |
| 7 | PIER FOUNDATIONS |
| 8 | ABUTMENTS NO.1 & NO. 4 |
| 9 | ABUTMENTS NO.2 & NO.3 |
| 10-11 | ABUTMENT DETAILS |
| 12 | PIERS NO.1, NO.2, NO.5, & NO.6 |
| 13 | PIERS NO.3, NO.4, NO.7, & NO.8 |
| 14 | FRAMING PLAN |
| 15 | TRANSVERSE SECTION |
| 16 | STEEL DETAILS |
| 17 | CONCRETE DETAILS |
| 18-19 | REINFORCING SCHEDULE |
| ST-1 | RAILING DETAILS (ST-1) |
| ST-4 | DECK DRAIN DETAILS (ST-4) |
| ST-5 | LIGHTING DETAILS (ST-5) |
| OR-1 | MOD. OF DECK SLAB & APP. SLAB |
| SS-3 | STANDARD STEEL DETAILS |

## KEY PLAN & INDEX SHEET

| NO. | BY | DATE | REMARKS |
|---|---|---|---|
| 3 | | 6-6-62 | Qty. on Struct. Stl. to nearest 10 lbs |
| 2 | | 1-25-62 | Qty. on Roof & struct. stl. |
| 1 | | 9-12-61 | END DIAPHRAGMS |

REVISIONS

DESIGN AND DRAWING BY
WESTERN ENGINEERS, INC. AND
EDWARDS AND KELCEY
CONSULTING ENGINEERS

SUBMITTED BY: CHIEF ENGINEER
UTAH ENGR. LIC. NO. 2162

SHEET 1 OF 19 SHEETS

UTAH STATE ROAD COMMISSION
SALT LAKE CITY, UTAH
BRIDGE DEPARTMENT

LINDON U.P. & ST. RTE. 114
OVERPASS
331' - 4½" O. TO O. 42" X ING ∠
STA. 501+30.62 I-15-6(29)219
LEHI - PROVO UTAH COUNTY

DESIGNED BY: A.J.P. DRAWN BY: S.B. TRACED BY: CHECKED BY: J.L.B.
DATE: May 22, 1961 APPROVED: Dale Sargent CHIEF BRIDGE ENGINEER

Dr. No. C-352

STRUCTURE 2-B

FINAL 1-14-63

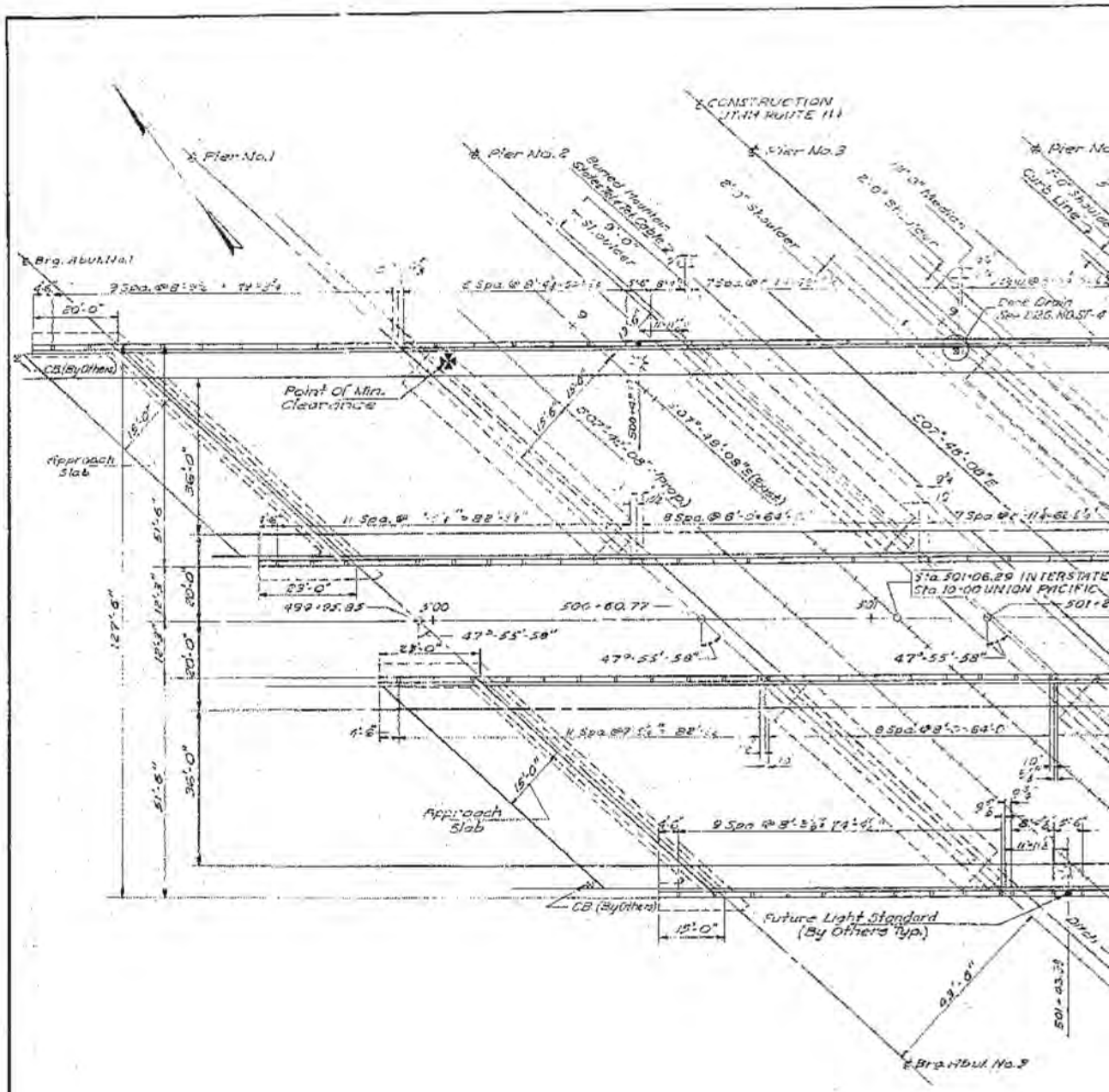


**FOR INFORMATION ONLY**

| FED. ROAD DIST. NO. | STATE | FED. AID PROJ. NO. | FISCAL YEAR | SHEET NO. | TOTAL SHEETS |
|---|---|---|---|---|---|
| UT | UTAH | I-15-6(12)270 | POST WAR | 6 | |

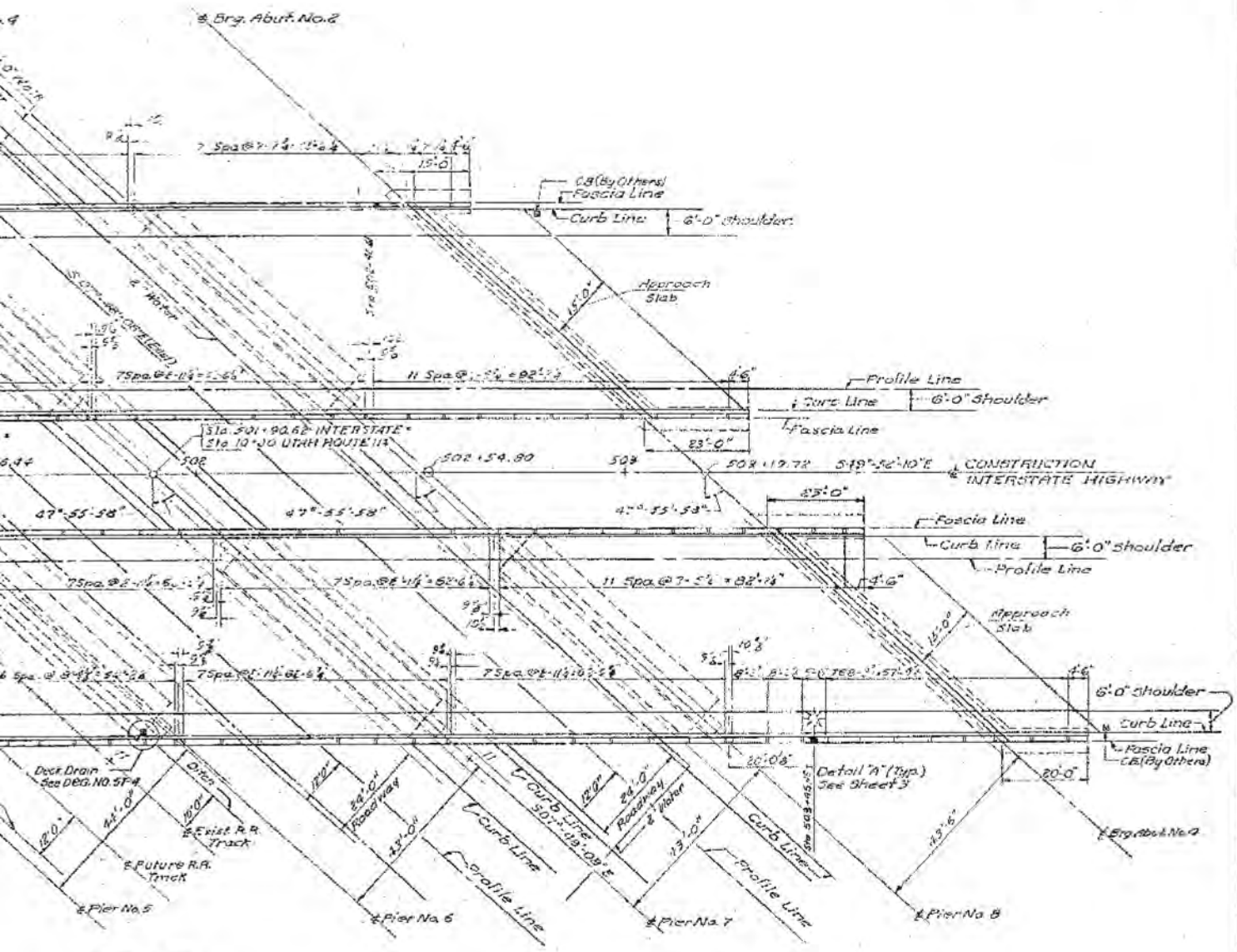


**DECK PLAN**
SCALE: 1/16" = 1'-0"

NOTES:
FOR RAILING DETAILS SEE DRG. NO. ST-1
FOR DETAIL AT LIGHT STANDARDS SEE DETAIL "A" ON SHEET 3 OF 19 SHEETS.
FOR DECK DRAIN DETAILS SEE DRG. NO. ST-4
UTILITIES AS SHOWN ARE APPROXIMATELY LOCATED
HANDRAIL POST SPACING GIVEN ALONG ℄ PARAPET WALL.

## DECK PLAN

SHEET 2 OF 19 SHEETS

UTAH STATE ROAD COMMISSION
SALT LAKE CITY, UTAH
BRIDGE DEPARTMENT

**LINDON U.P. & ST. RTE. 114 OVERPASS**

331'-4 1/8" O. TO O. 42° XING ∠
STA. 501+30.62 I-15-6(12)270
LEHI-PROVO UTAH COUNTY

DESIGNED BY A.J.S. SCALE AS NOTED
DRAWN BY T.M. ISSUED May 22, 1962
TRACED BY
CHECKED BY J.L.B. (Atty.)

DESIGN AND DRAWING BY
WESTERN ENGINEERS, INC. AND
EDWARDS AND KELCEY
CONSULTING ENGINEERS

SUBMITTED BY ... CHIEF ENGINEER
UTAH ENGR. LIC. NO. 2164

REGISTERED PROFESSIONAL ENGINEER NO. 2164 J. R. TEBBS STATE OF UTAH

DWG. NO. C-352

STRUCTURE 2-E

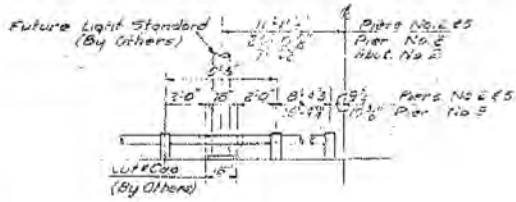


**DETAIL "A"**

SCALE: 1/4"=1'-0"

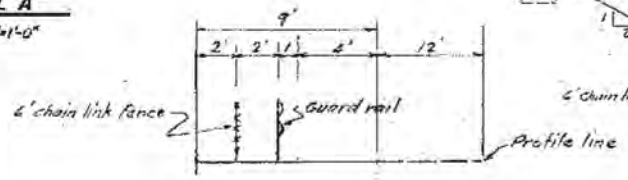


DETAIL "B"

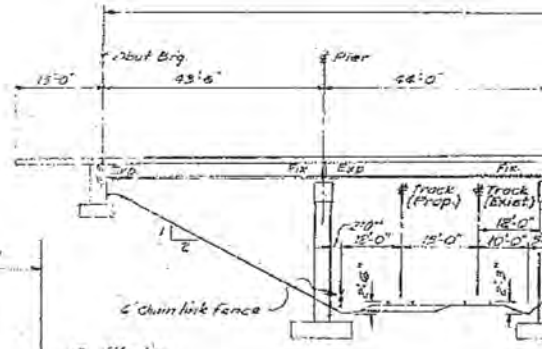


**SQUARE**

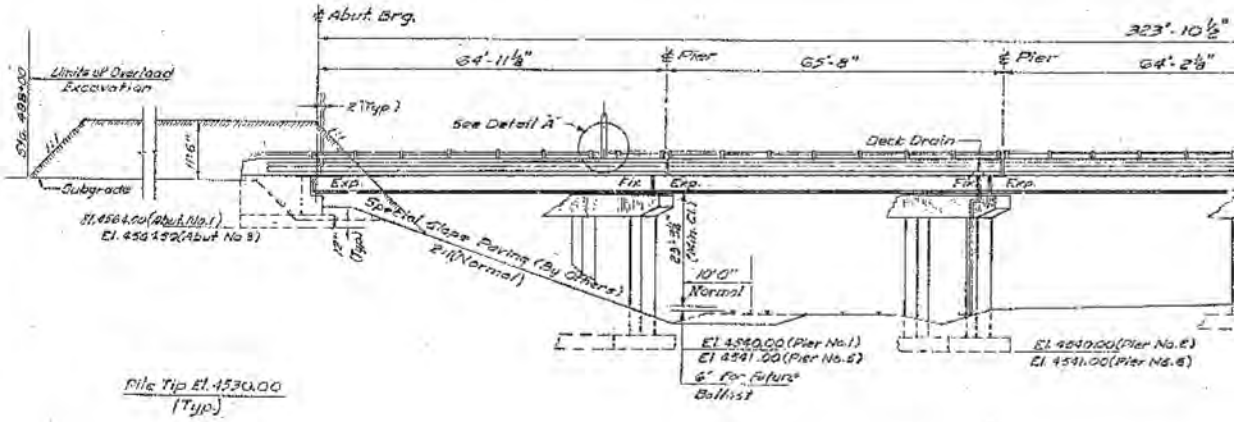


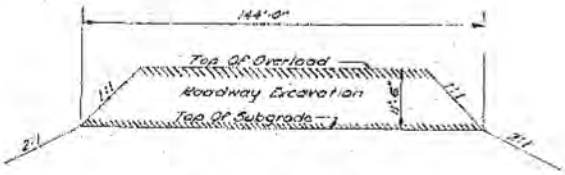


**TYPICAL CROSS SECTION OVERLOAD**

**FOR INFOR**

| FED. ROAD DIST. NO. | STATE | FED. AID PROJ. NO. | FISCAL YEAR | SHEET NO. | TOTAL SHEETS |
|---|---|---|---|---|---|
| UT. | UTAH | I-15-6(12)270 | POST WAR | 7 | |

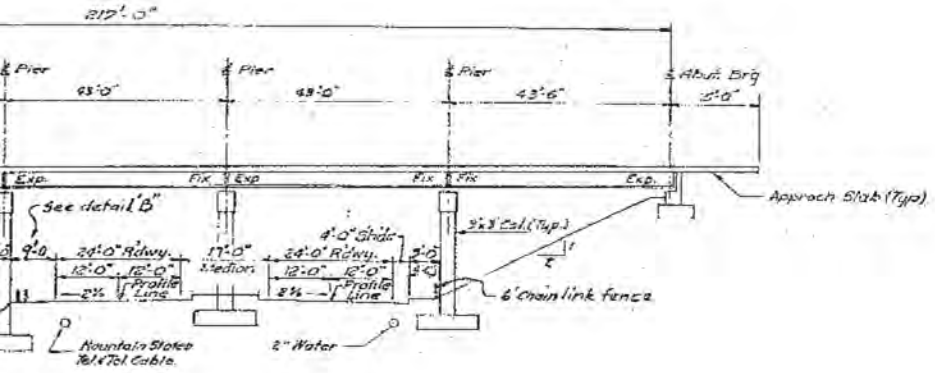


**LONGITUDINAL SECTION**

SCALE: 1/16" = 1'-0"

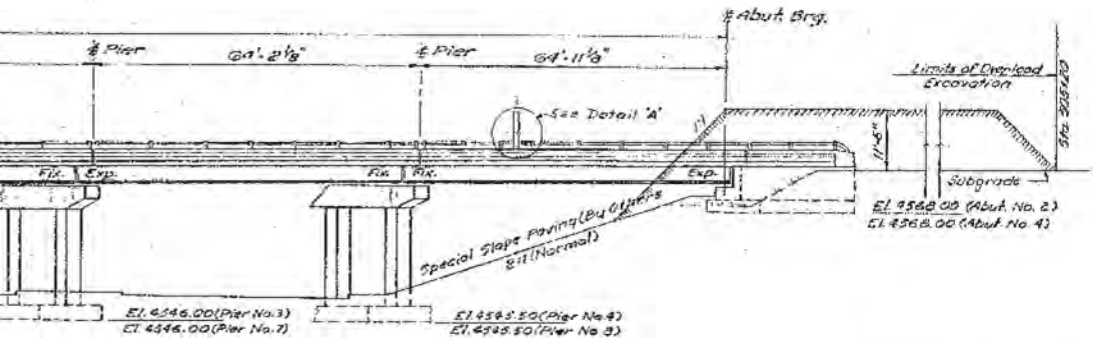


**ELEVATION**

SCALE: 1/16" = 1'-0"

NOTES:

FOR RAILING DETAILS SEE DWG NO. ST-1
FOR RAILING SPACING SEE SHEET 2 OF 19 SHEETS
FOR JOINT FILLER DETAILS AT PARAPETS SEE SHEET 17 OF 19 SHEETS
FOR DECK DRAIN DETAILS SEE DWG NO. ST-4
UTILITIES SHOWN ARE APPROXIMATELY LOCATED. EXACT LOCATION TO BE DETERMINED AT TIME OF CONSTRUCTION BY THE CONTRACTOR.

**ELEVATION**

SHEET 3 OF 19 SHEETS

UTAH STATE ROAD COMMISSION
SALT LAKE CITY, UTAH
BRIDGE DEPARTMENT

**LINDON U.P. & ST. RTE. 114 OVERPASS**

331'-4 1/8" O. TO O. 42" X ING ∠
STA. 501 + 90.62 I-15-6 (12) 270
LEHI - PROVO UTAH COUNTY

DESIGNED BY K.Y. SCALE AS NOTED
DRAWN BY J.K. ISSUED May 27, 1961
TRACED BY APPROVED R.L. Sargent
CHECKED BY L.B. CHIEF BRIDGE ENGINEER

DWG. No. C-352

STRUCTURE 2-E

DESIGN AND DRAWING BY
WESTERN ENGINEERS, INC. AND
EDWARDS AND KELCEY
CONSULTING ENGINEERS

SUBMITTED BY CHIEF ENGINEER
UTAH ENGR. LIC. NO. 2164

REGISTERED PROFESSIONAL ENGINEER NO. 2164 STATE OF UTAH

**MATION ONLY**

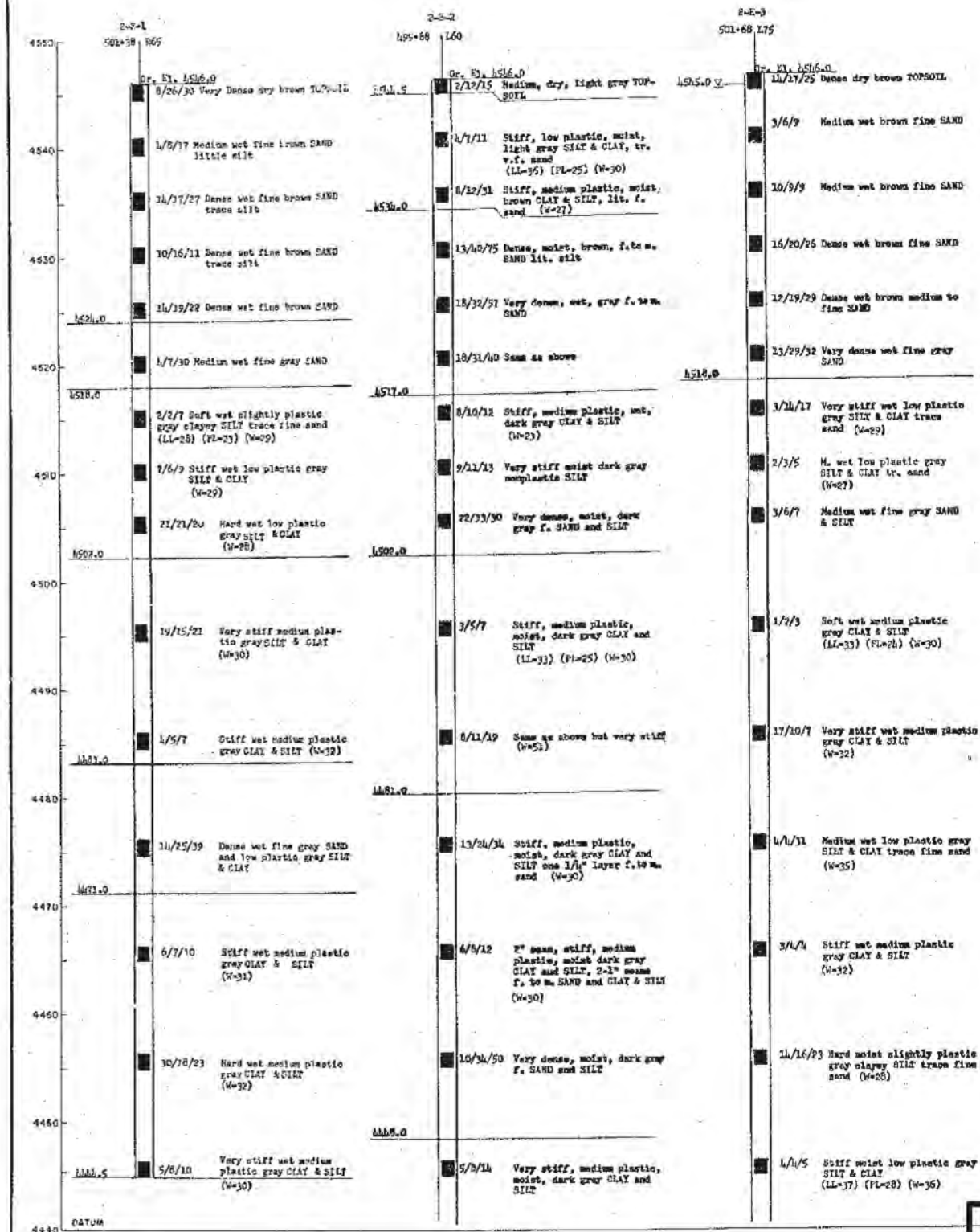


DGN Files IP PWBoss\16721\4433.C-352-84.PowerGeogen
02-MAY-2005

10

| FED. ROAD DIST. NO. | STATE | FED. AID PROJ. NO. | FISCAL YEAR | SHEET NO. | TOTAL SHEETS |
|---|---|---|---|---|---|
| UT. | UTAH | I-15-8(11)270 | POST WAR | 8 | |

## LEGEND

Boring No. → 1-4-1

Interstate Station → 22+63 | 87Z → Offset

Ground Elevation → Gr. El. 4562

Ground Water Table Elevation 4557.1

Number of Blows Used to drive casing 12 inches with 340 lb. hammer falling 2 ft. (Typical)

Strata Change Elevation (Typical) → 4550

Boring Advanced Without Casing

Location of Sample (Typical) → 4539

Bottom of Boring Elevation 4535.5

| Elevation | Blows | Description |
|---|---|---|
| | 3, 7 | 2/4/5 Stiff m. plastic brown clay some silt-TOPSOIL |
| 4560 | | |
| | 9, 12, 17 | |
| | 10, 17, 22 | 11/13/17 M. dense wet tan m. to c. SAND, some silt, tr. f. gravel |
| | 33, 43, 36 | 15/21/30 Dense wet tan m. to c. SAND, some gravel |
| 4550 | 43, 86, 97, 206 | |
| | | 7/6/8 Stiff, low plastic brown CLAY & SILT, tr. f. sand (LL = 40, PL = 26, W = 39) |
| | | 11/10/12 Very stiff, plastic gray CLAY & SILT, tr. f. sand (W = 35, qu = 17/ft ) |
| 4535.5 | | 9/12/20 Very stiff varved plastic gray silty CLAY & f. silty SAND |

Number of Blows Used to drive 1-3/8" I.D. sampler with 140 lb. hammer falling 30 inches — 1st. 6 inches, 2nd. 6 inches, 3rd. 6 inches

visual soil description for each sample and results of classification tests, if any (Typical)

### ABBREVIATIONS IF AND WHEN USED:

br. = brown
gr. = gray
org. = organic
f. = fine
v. f. = very fine
m. = medium
c. = coarse
sa. = sand
tr. = trace
lit. = little
LL = Liquid Limit in %
PL = Plastic Limit in %
W = Natural Moisture Content in %
qu = Unconfined compression test from pocket penetrometer in T/ft.²

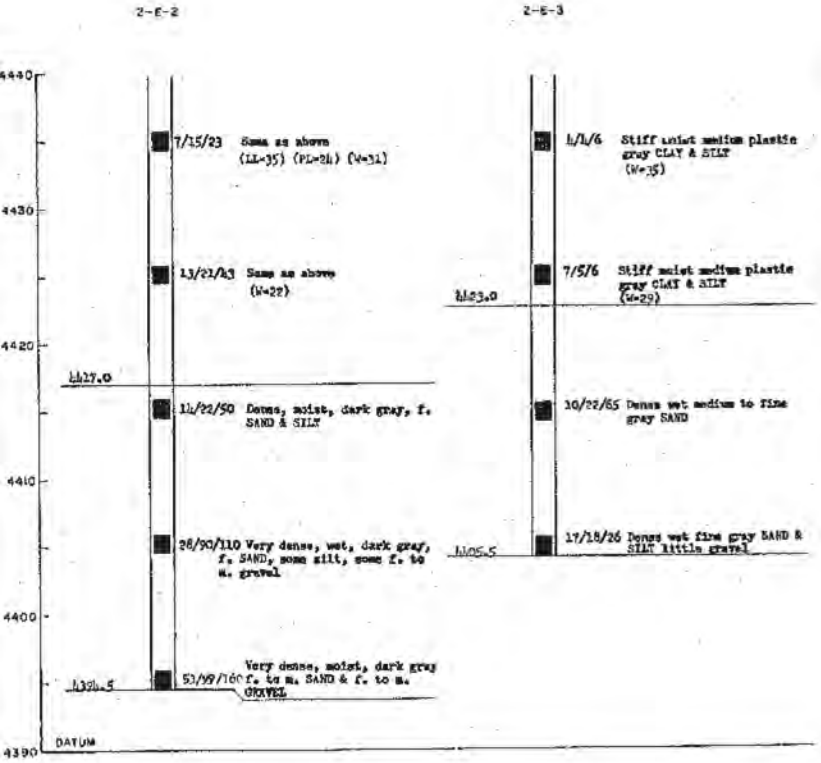


## BORING LOGS

SHEET 4 OF 19 SHEETS

UTAH STATE ROAD COMMISSION
SALT LAKE CITY, UTAH
BRIDGE DEPARTMENT

LINDON U.P. & ST. RTE. 114 OVERPASS
33'-4 1/8" O. TO O. 42° XING ∠
STA. 301+90.82 1-15-8 (11)270
LEHI-PROVO UTAH COUNTY

DESIGNED BY E.E.K. DATE APPROVED NOV 1960
DRAWN BY E.E.K. DATE APPROVED May 27, 1961
TRACED BY E.E.K. DATE APPROVED D.L. Sargent CHIEF BRIDGE ENGINEER
CHECKED BY E.E.K. E.E.K.

DESIGN AND DRAWING BY
WESTERN ENGINEERS, INC. AND
EDWARDS AND KELCEY
CONSULTING ENGINEERS

SUBMITTED BY J. P. Henville CHIEF ENGINEER
UTAH ENGR. LIC. NO. 2164

REGISTERED PROFESSIONAL ENGINEER NO. 2164 J. P. HENVILLE STATE OF UTAH

DWG. NO. C-352

STRUCTURE 2-E

OR INFORMATION ONLY

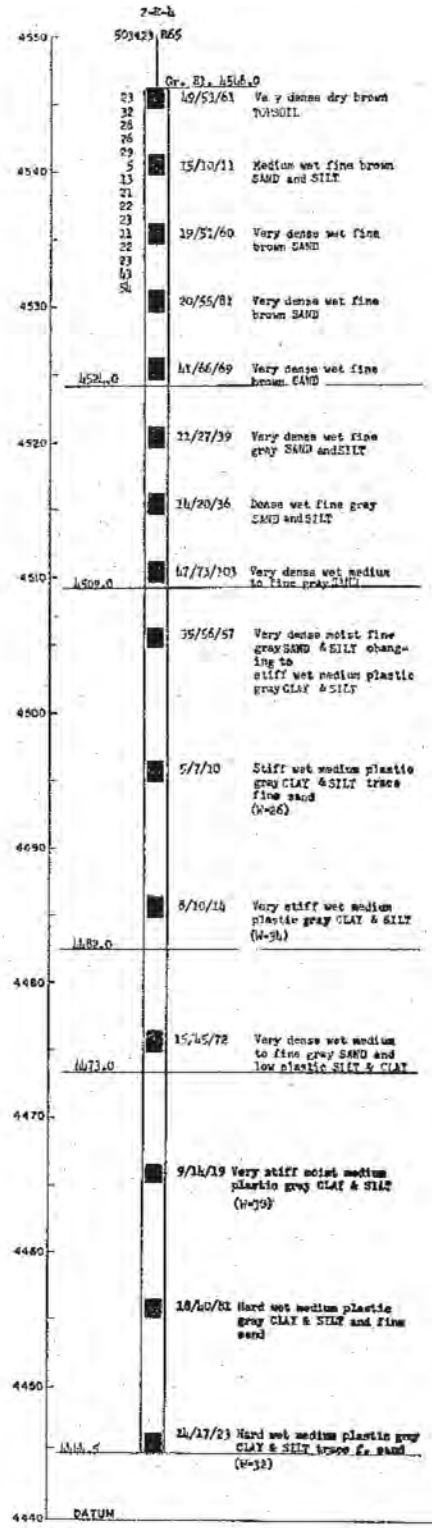


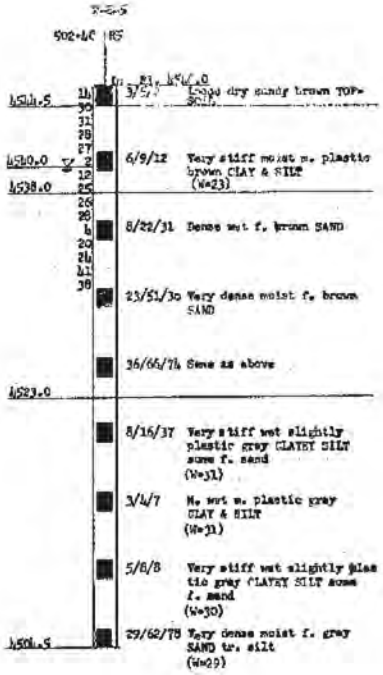


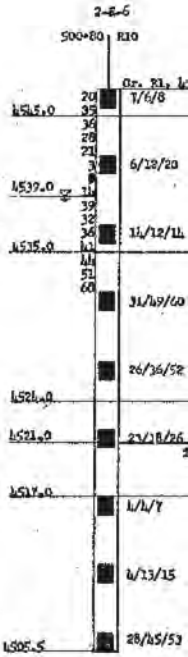


FOR INFOR

[redacted]

| FED. ROAD DIST. NO. | STATE | FED. AID PROJ. NO. | FISCAL YEAR | SHEET NO. | TOTAL SHEETS |
|---|---|---|---|---|---|
| UT | UTAH | I-15-6(11)170 | POST WAR | 9 | |

47.0
M. dry brown sandy TOPSOIL

Very stiff moist m. plastic brown CLAY & SILT (W-27)

Very stiff wet slightly plastic brown CLAYEY SILT some v.f. sand (W-28)

Very dense wet brown f. SAND

Same as above

Dense wet f. gray SAND changing to very stiff wet low plastic gray SILT & CLAY lit. f. sand

M. wet low plastic gray SILT & CLAY (W-32)

Very stiff wet slightly plastic gray CLAYEY SILT lit. v.f. sand (W-29)

Very dense wet f. gray SAND & SILT

## LEGEND

Boring No. — 1-A-1

Interstate Station — 22+63 — 272 — Offset

Ground Elevation — Gr. El. 4562

4560 — 3, 7, 9

2/4/5 — Stiff m. plastic brown clay some silt-TOPSOIL

Ground Water Table Elevation 4557.1 ▽ — 12, 17

10, 17, 17, 22, 33, 40, 36, 43, 86, 92, 106

11/13/17 — M. dense wet tan m. to c. SAND, some silt, tr. f. gravel

Number of Blows Used to drive casing 12 inches with 300 lb. hammer falling 2 ft. (Typical)

15/21/30 — Dense wet tan m. to c. SAND, some gravel

Strata Change Elevation (Typical) — 4550

7/6/8 — Stiff, low plastic brown CLAY & SILT, tr. f. sand (LL = 40, PL = 28, W = 32)

Boring Advanced Without Casing

11/10/12 — Very stiff, plastic gray CLAY & SILT, tr. f. sand (W = 35, qu = 1.7/ft.)

Location of Sample (Typical) — 4539

9/12/20 — Very stiff varved plastic gray silty CLAY & f. silty SAND

Bottom of Boring Elevation — 4535.5

Number of Blows Used to drive 1-3/8" I.D. sampler with 140 lb. hammer falling 30 inches — 1st. 6 inches, 2nd. 6 inches, 3rd. 6 inches

Visual soil description for each sample and results of classification tests, if any (Typical)

ABBREVIATIONS IF AND WHEN USED:

br. = brown
gr. = gray
org. = organic
f. = fine
v. f. = very fine

m. = medium
c. = coarse
sm. = some
tr. = trace
lit. = little

LL = Liquid Limit in %
PL = Plastic Limit in %
W = Natural Moisture Content in %
qu = Unconfined compression test from pocket penetrometer in T/ft.²

**MATION ONLY**

## BORING LOGS

SHEET 5 OF 19 SHEETS

UTAH STATE ROAD COMMISSION
SALT LAKE CITY, UTAH
BRIDGE DEPARTMENT

LINDON U.P. & ST. RTE. 114
OVERPASS
331'-4 1/3" O. TO O. 42" X ING L
STA. 501+30.62 I-15-6(11)170
LEHI - PROVO UTAH COUNTY

DESIGNED BY E.G.K. SCALE AS NOTED
DRAWN BY E.G.K. ISSUED May 22, 1961
TRACED BY E.G.K. APPROVED D.L. Sargent
CHIEF BRIDGE ENGINEER
CHECKED BY E.G.K.

DWG. No. C-352

DESIGN AND DRAWING BY
WESTERN ENGINEERS, INC. AND
EDWARDS AND KELCEY
CONSULTING ENGINEERS

SUBMITTED BY L. R. Newville CHIEF ENGINEER
UTAH ENGR. LIC. NO. 2164

REGISTERED PROFESSIONAL ENGINEER NO. 2164 L. R. NEWVILLE STATE OF UTAH

STRUCTURE 2-E

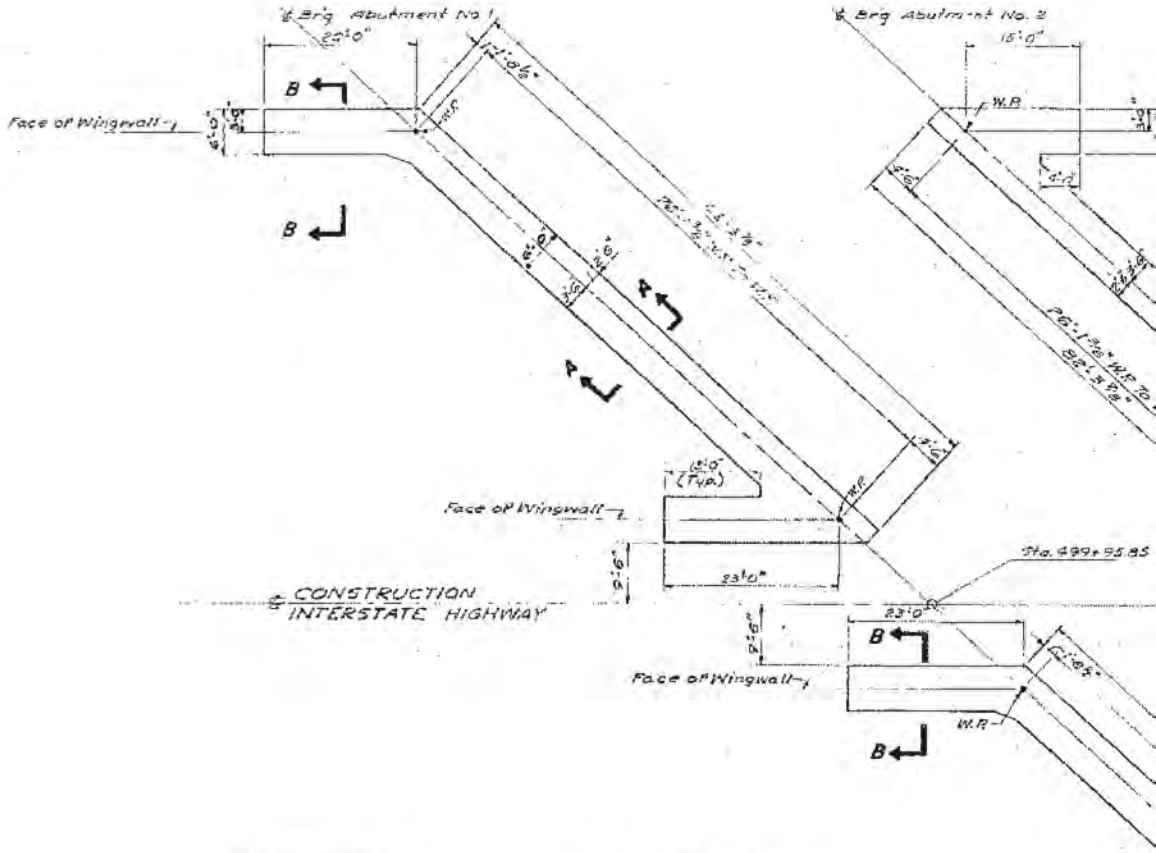


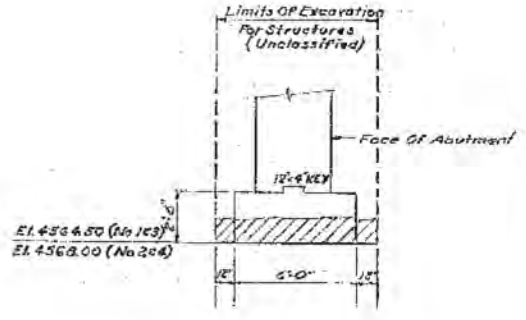


**SECTION A-A**

SCALE: 1/4"=1'-0"

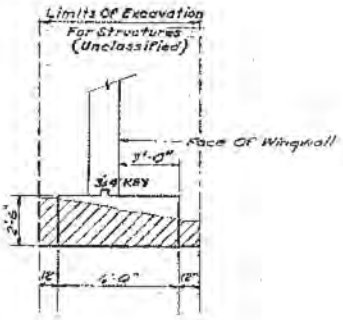


**SECTION B-B**

SCALE: 1/4"=1'-0"

NOTES:

FOUNDAT

FOUNDATI

MAXIMUM

**FOR INFORMATION ONLY**

[redacted]

DGN Files IP. PWPubns\16721\4433.C-352-86_FoundFoundat
02-MAY-2005

| FED. ROAD DIST. NO. | STATE | FED. AID PROJ. NO. | FISCAL YEAR | SHEET NO. | TOTAL SHEETS |
|---|---|---|---|---|---|
| UT. | UTAH | I-15-6(12)270 | POST WAR | 10 | |

12

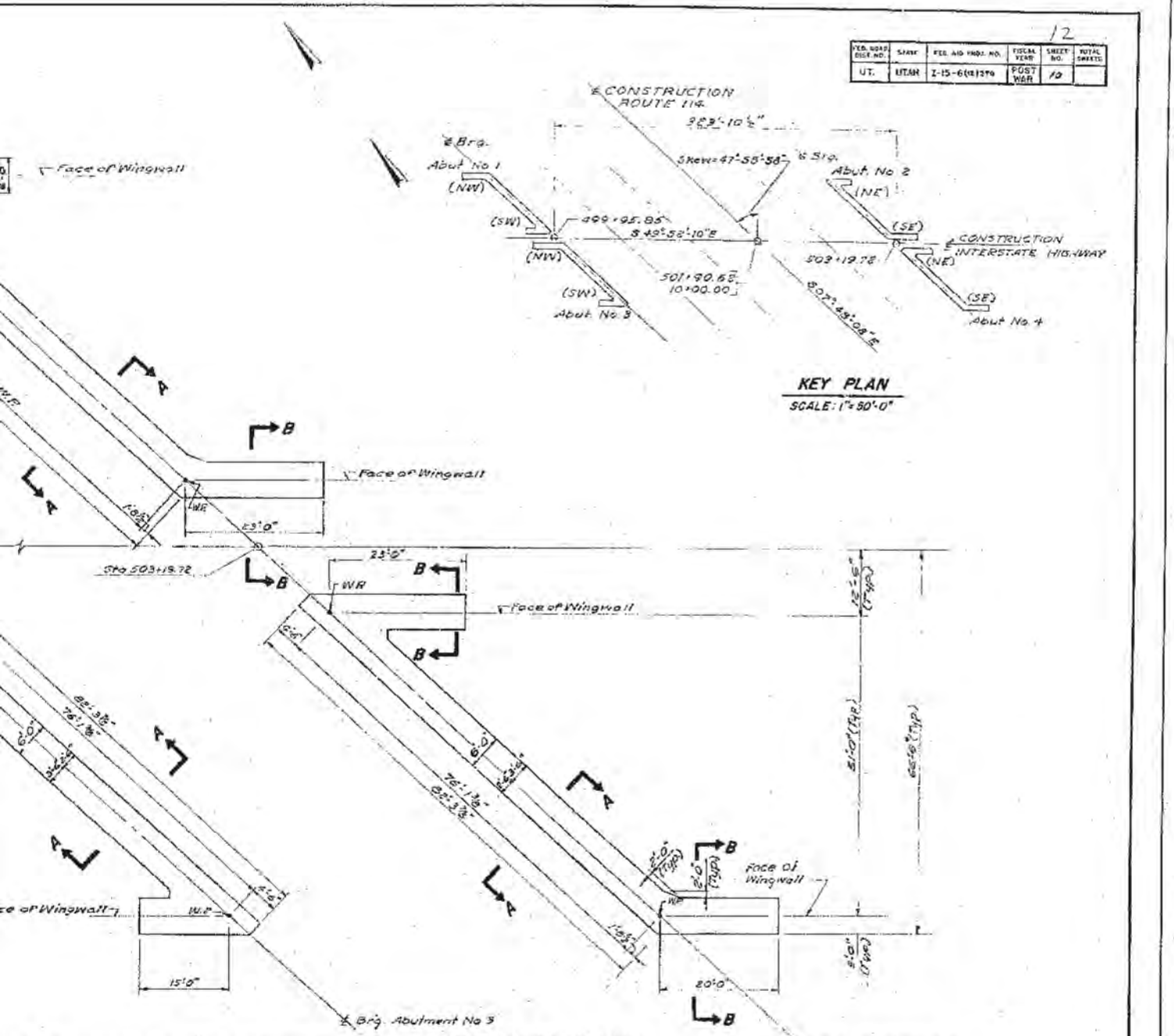


KEY PLAN
SCALE: 1"=50'-0"

ABUTMENT FOUNDATION
SCALE: 3/32"=1'-0"

...ONS FOR ABUTMENT NO. 1 & NO. 4 ARE SIMILAR.
...ONS FOR ABUTMENT NO. 2 & NO. 3 ARE SIMILAR.
COMPUTED SOIL BEARING PRESSURE 1.90 TONS/S.F.

ABUTMENT FOUNDATION

SHEET 6 OF 19 SHEETS

UTAH STATE ROAD COMMISSION
SALT LAKE CITY, UTAH
BRIDGE DEPARTMENT

LINDON U.P. & ST. RTE. 114
OVERPASS
331'-4½" O.TO O. 42° X ING ∠
STA. 501+90.82 I-15-6 (12)270
LEHI-PROVO UTAH COUNTY

DESIGNED BY F.C. SCALE AS NOTED
DRAWN BY J.K. ISSUED May 22, 1961
TRACED BY APPROVED D.L. Sargent
CHIEF BRIDGE ENGINEER
CHECKED BY J.L.B.

DWG. No. C-352

STRUCTURE 2-E

REGISTERED PROFESSIONAL ENGINEER
NO. 2164
I. R. NEWILLE
STATE OF UTAH

DESIGN AND DRAWING BY
WESTERN ENGINEERS, INC. AND
EDWARDS AND KELCEY
CONSULTING ENGINEERS

SUBMITTED BY I. R. Newille
CHIEF ENGINEER
UTAH ENGR. LIC. NO. 2164

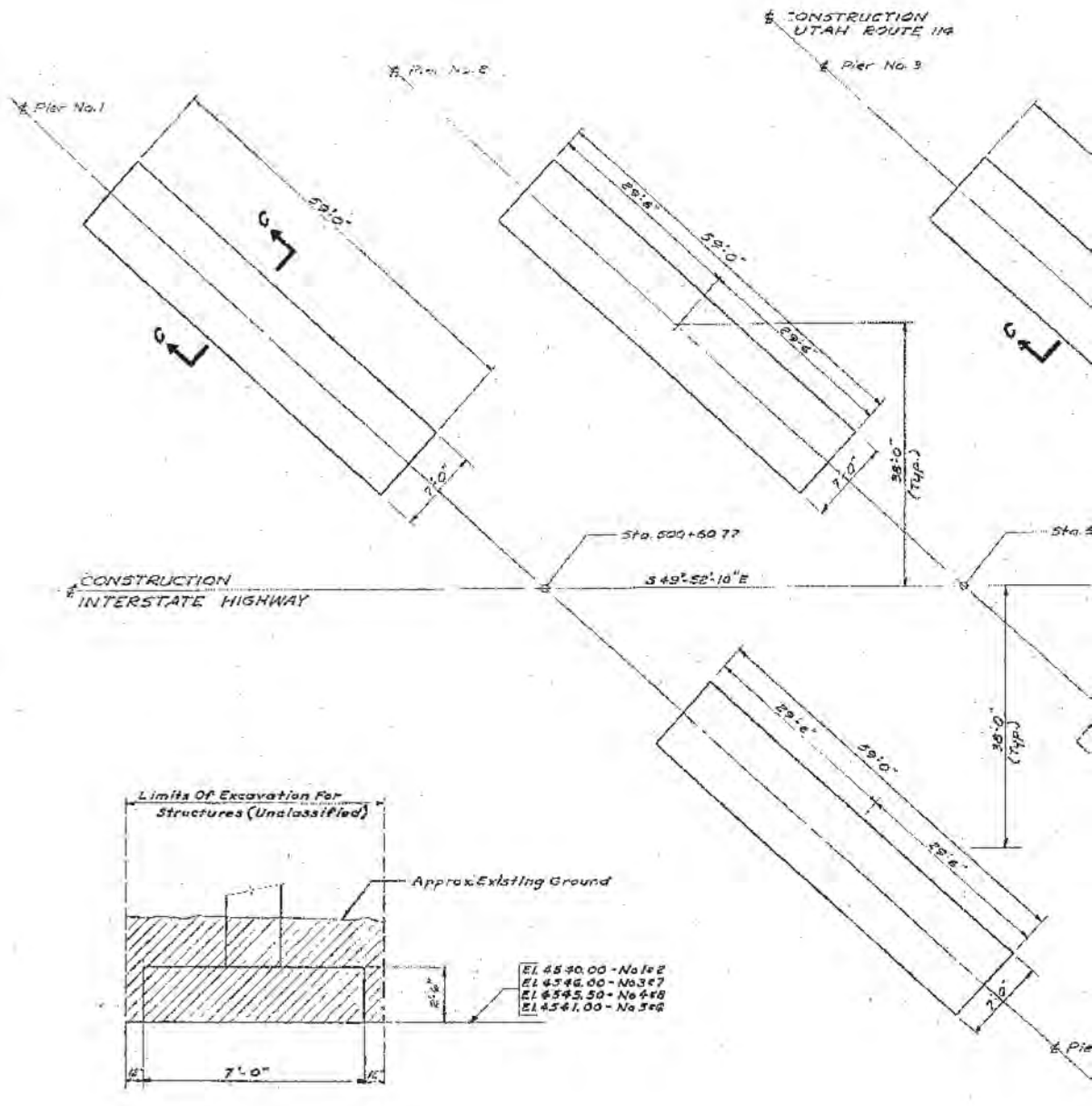


SECTION C-C

SCALE: 1/4" = 1'-0"

NOTES:

MAXIMUM COMP
AT PIERS NO. 2 &
USE TEMPORARY
TEST PITS PRIOR
OR AS DETERMINE
STRUCTURAL ENG
OR EXCAVATION F

**FOR INFORMATION ONLY**

DGN Files IP_PWPadres\16721\4433_C-352-87_Footing.dgn
02-MAY-2005

| FED. ROAD INST. NO. | STATE | FED. AID PROJ. NO. | FISCAL YEAR | SHEET NO. | TOTAL SHEETS |
|---|---|---|---|---|---|
| UT. | UTAH | I-15-8(121)270 | POST WAR | 11 | 13 |

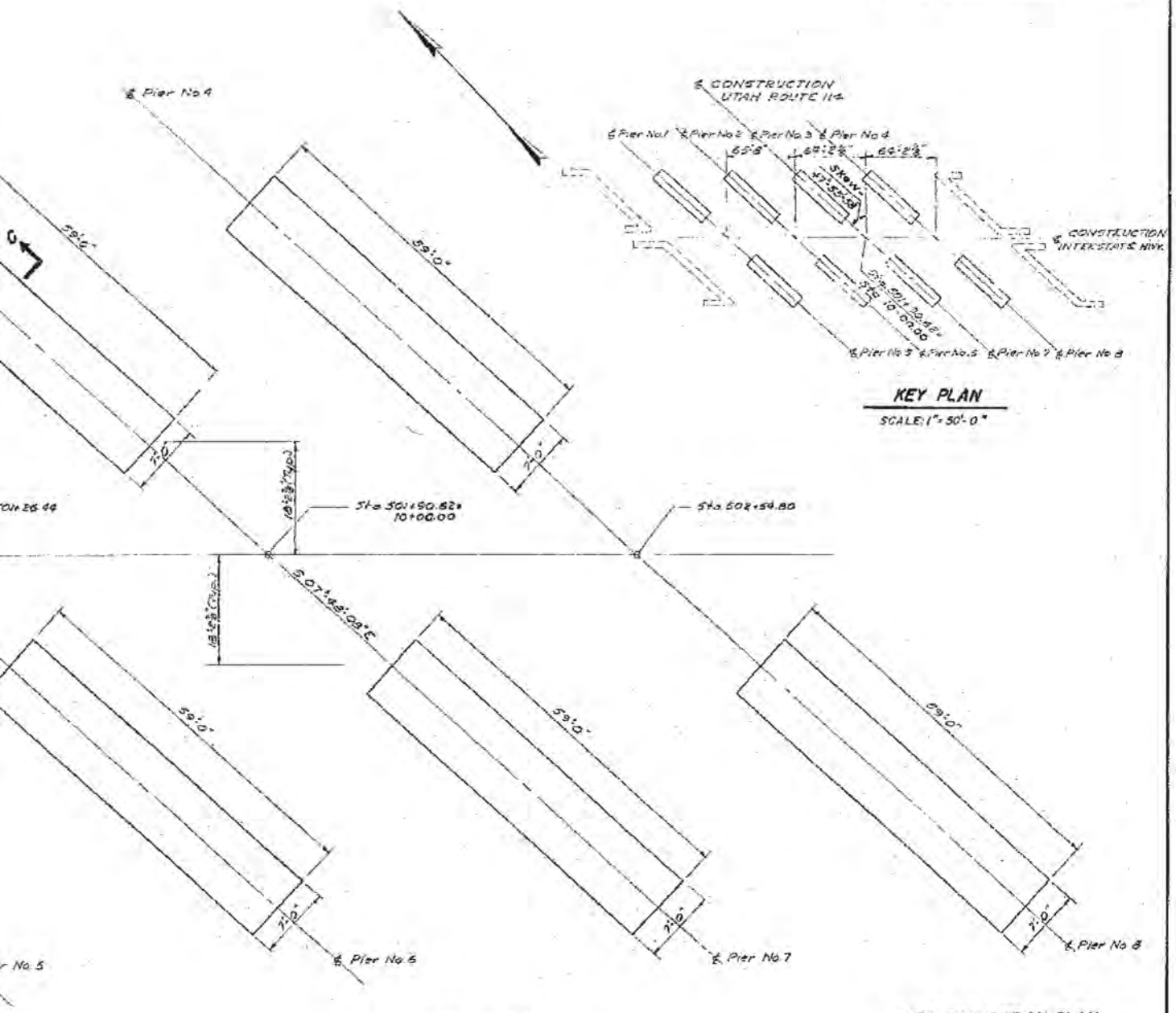


## KEY PLAN

SCALE: 1" = 50'-0"

## PIER FOUNDATION PLAN

SCALE: 3/32" = 1'-0"

## PIER FOUNDATION PLAN

...UTED SOIL BEARING PRESSURE 2 T/SF.
...NO. 6, IF REQUIRED TO PROTECT TRACKS,
... SHEETING.
... TO CONSTRUCTION SHALL BE MADE AT PIER SITES AND/
...D BY THE ENGINEER. THE OFFICE OF THE CHIEF
...INEER SHALL DETERMINE WHETHER OR NOT PILING
...OR STRUCTURES AND GRANULAR BACKFILL IS REQUIRED.

REGISTERED PROFESSIONAL ENGINEER NO. 2164 J. R. NEWVILLE STATE OF UTAH

DESIGN AND DRAWING BY
WESTERN ENGINEERS, INC. AND
EDWARDS AND KELCEY
CONSULTING ENGINEERS

SUBMITTED BY J. R. Newville CHIEF ENGINEER
UTAH ENGR. REG. NO. 2164

SHEET 7 OF 19 SHEETS

UTAH STATE ROAD COMMISSION
SALT LAKE CITY, UTAH
BRIDGE DEPARTMENT

**LINDON U.P. & ST. RTE. 114 OVERPASS**

331'-4½" O. TO O. 42° X ING L
STA. 501+90.62 I-15-8 (12) 270
LEHI - PROVO UTAH COUNTY

DESIGNED BY K. Y. SCALE AS NOTED
DRAWN BY J.K. ISSUED May 22, 1961
TRACED BY APPROVED N.L.L. Sangmeister
CHECKED BY H.B. CHIEF BRIDGE ENGINEER

DR. NO. DWG. NO. C-352

STRUCTURE 2-E

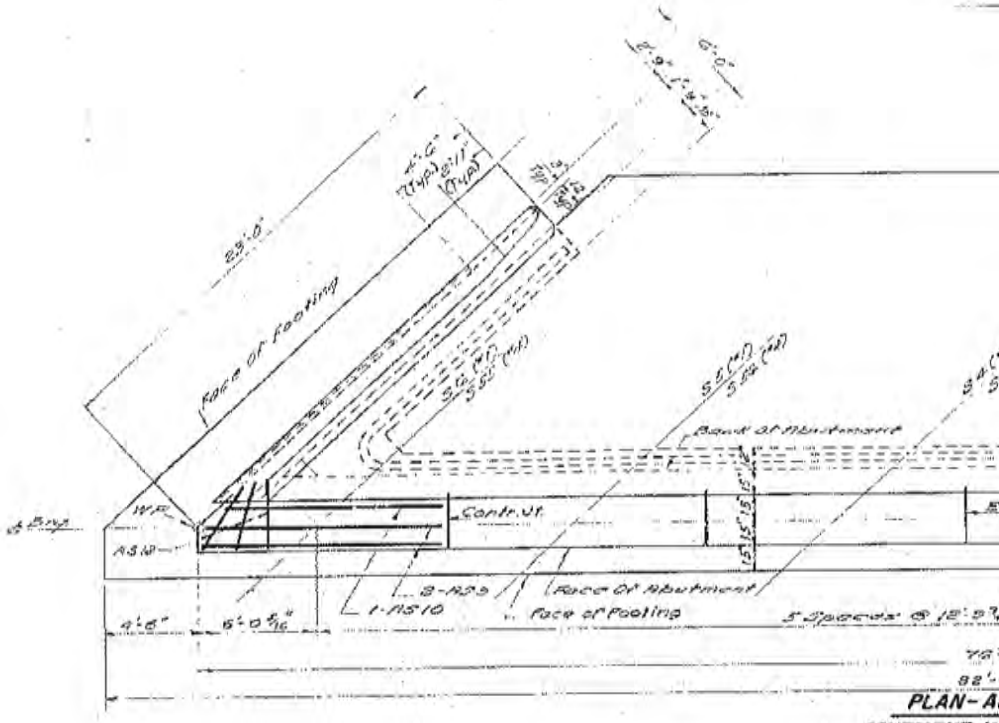


PLAN-A
ABUTMENT N
SCALE: 1/

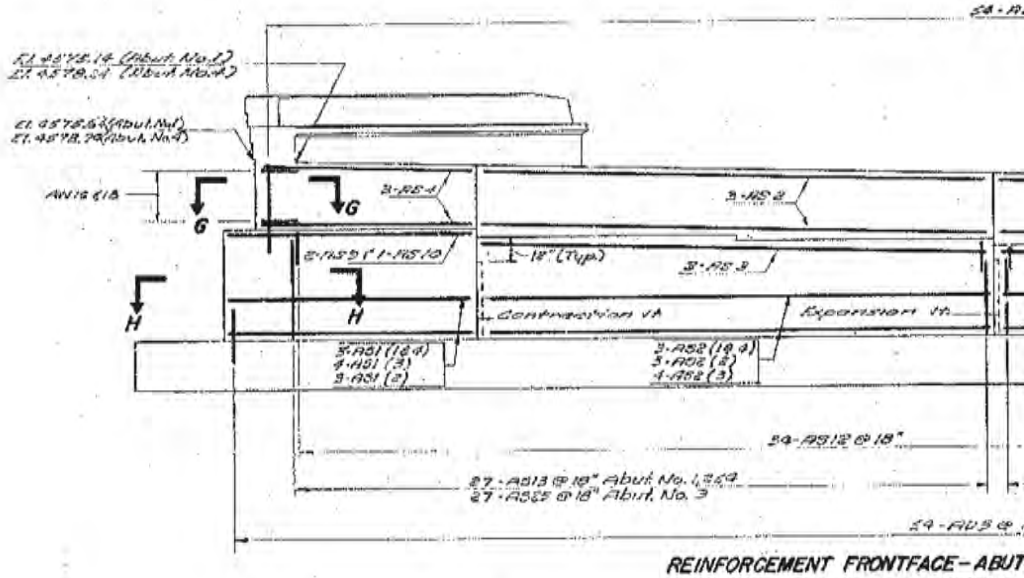


REINFORCEMENT FRONTFACE-ABUT
ELEVATION
SCALE: 1/4" = 1'-0"

FOR INFORMATION ONLY

DGN Files: IP_PaPaden11572\4433_C-352-89_FormFoudan

02-MAY-2005

| FED. ROAD DIST. NO. | STATE | FED. AID PROJ. NO. | F. AID PROJ. NO. | SHEET NO. | TOTAL SHEETS |
|---|---|---|---|---|---|
| UT. | UTAH | I-15-8(14)210 | POST WAR | 12 | 14 |

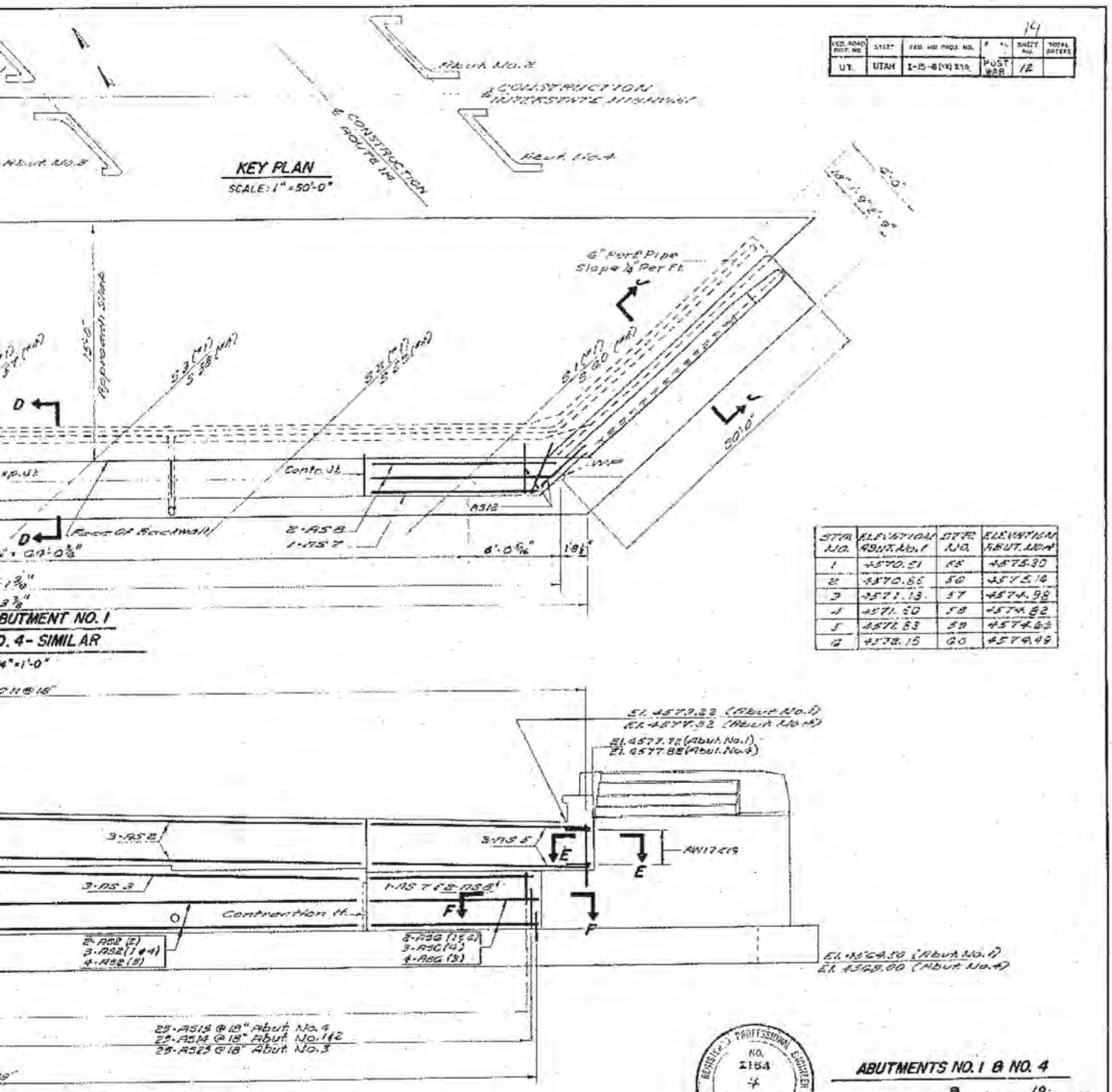


| STA. NO. | ELEVATION ABUT. No. 1 | STA. NO. | ELEVATION ABUT. No. 4 |
|---|---|---|---|
| 1 | 4570.51 | 55 | 4575.30 |
| 2 | 4570.85 | 56 | 4575.14 |
| 3 | 4571.13 | 57 | 4574.98 |
| 4 | 4571.50 | 58 | 4574.82 |
| 5 | 4571.83 | 59 | 4574.63 |
| 6 | 4572.15 | 60 | 4574.49 |

NOTES:
FOR FOOTING LOCATION SEE SHEET NO. 6
FOR ELEVATIONS OF WINGWALLS & FOOTING REINF. SEE SHEET NO. 11.
FOR ANCHOR BOLT LOCATION PLAN SEE SHEET NO. 10.
FOR SECTIONS NOT SHOWN SEE SHEET NO. 10
FOR EXP. & CONTR. JT. DETAILS, SEE SHEET NO. 10.

REGISTERED PROFESSIONAL ENGINEER NO. 2164 J. R. NEWVILLE STATE OF UTAH

## ABUTMENTS NO. 1 & NO. 4

SHEET 8 OF 19 SHEETS

UTAH STATE ROAD COMMISSION
SALT LAKE CITY, UTAH
BRIDGE DEPARTMENT

**LINDON U.P. & ST. RTE. 114 OVERPASS**

331'-4 1/8" O. TO O. 42" XING ∠
STA. 501+90.62 I-15-8 (12)210
LEHI - PROVO UTAH COUNTY

DESIGNED BY K.Y. SCALE AS NOTED
DRAWN BY S.G. DATE May 22, '56
TRACED BY D.L. Sabey Jr.
CHECKED BY C.E.S. CHIEF BRIDGE ENGINEER

DESIGN AND DRAWING BY
WESTERN ENGINEERS, INC. AND
EDWARDS AND KELCEY
CONSULTING ENGINEERS

SUBMITTED BY J. R. Newville CHIEF ENGINEER
UTAH REG. LIC. NO. 2164

DWG. NO. C-352

STRUCTURE 2-E

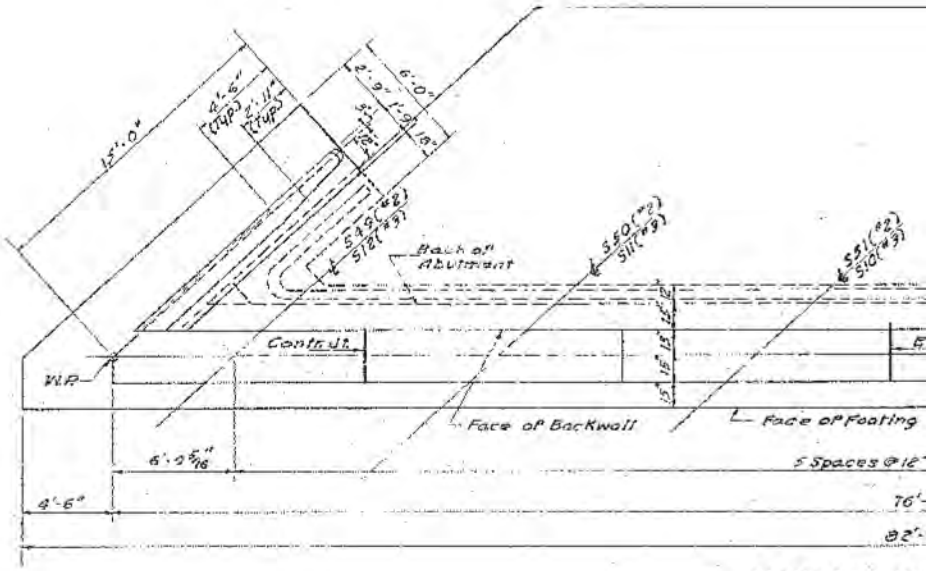


**PLAN - ABUTMEN**

**ABUTMENT NO. 3 -**

SCALE: 1/4" =

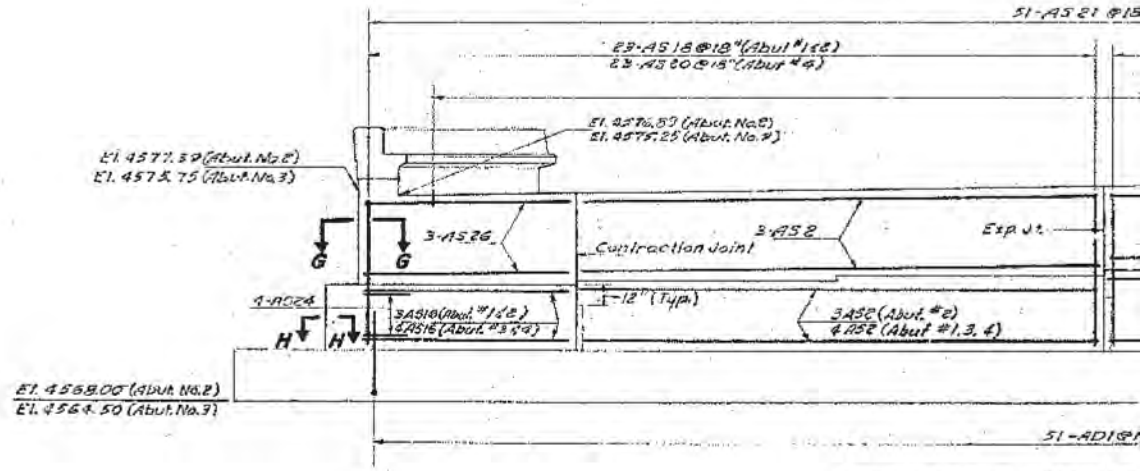


**REINFORCEMENT BACKFACE**

**ELEVATI**

SCALE: 1/4" =

**FOR INFORMATION ONLY**

DGN Files IP. PWPadres\16721\4433.C-052-89_PonteGondon

02-MAY-2005

| FED. ROAD DIST. NO. | STATE | FED. AID PROJ. NO. | FISCAL YEAR | SHEET NO. | TOTAL SHEETS |
|---|---|---|---|---|---|
| UT. | UTAH | I-15-6(12)270 | POST WAR | 15 | |

15

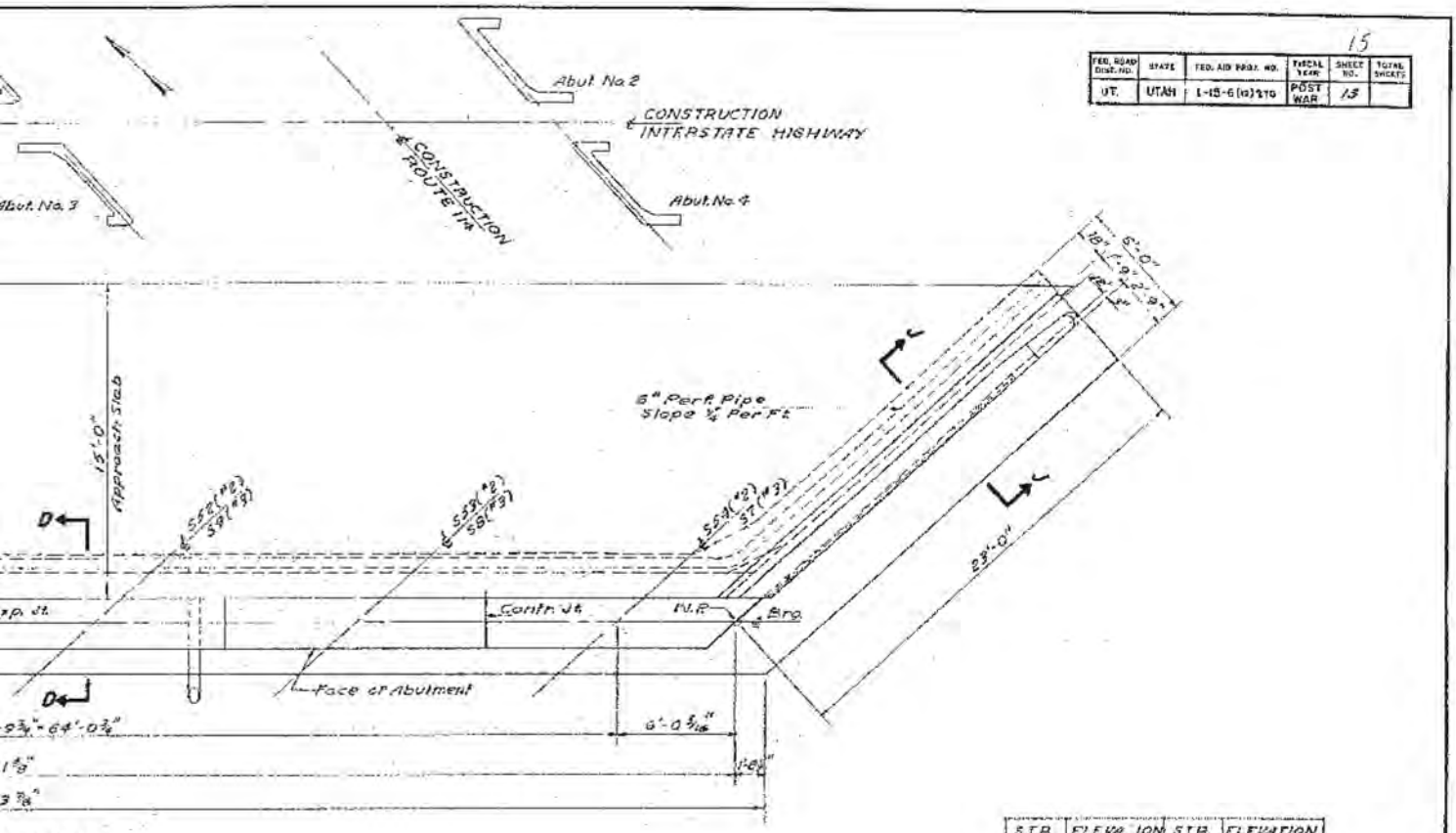


| STR. NO. | ELEVATION ABUT. NO. 2 | STR. NO. | ELEVATION ABUT. NO. 3 |
|---|---|---|---|
| 49 | 4574.07 | 7 | 4572.53 |
| 50 | 4574.30 | 8 | 4572.62 |
| 51 | 4574.52 | 9 | 4572.37 |
| 52 | 4574.74 | 10 | 4572.51 |
| 53 | 4574.96 | 11 | 4572.75 |
| 54 | 4575.18 | 12 | 4572.93 |

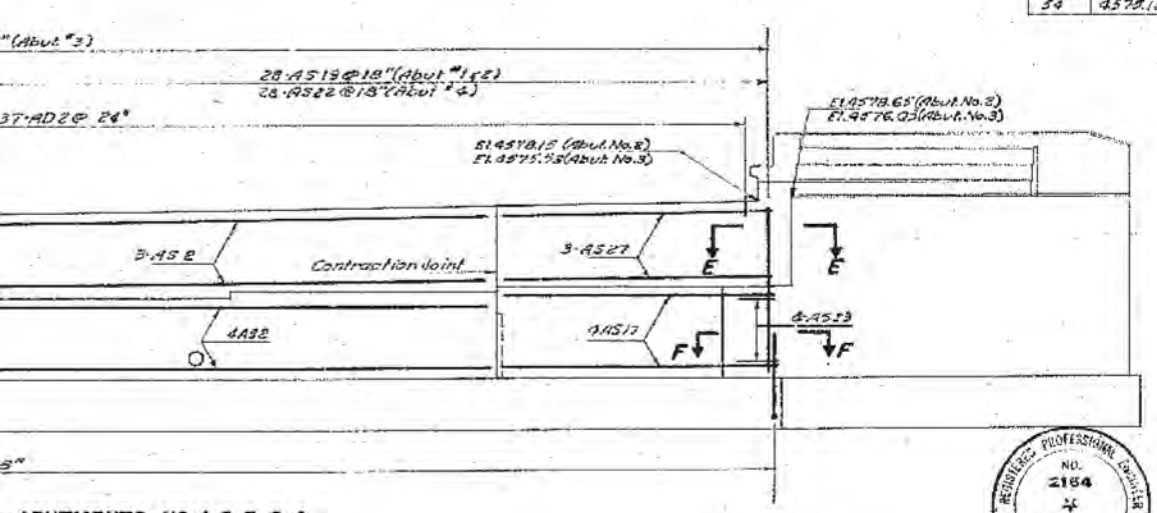


## ABUTMENT NO. 2 & NO. 3

SHEET 9 OF 19 SHEETS

UTAH STATE ROAD COMMISSION
SALT LAKE CITY, UTAH
BRIDGE DEPARTMENT

**LINDON U.P. & ST. RTE. 114 OVERPASS**

331'-4 1/8" O. TO O. 42" XING ∠
STA. 501+90.82 I-15-6 (12)270
LEHI - PROVO UTAH COUNTY

DESIGNED BY N. F. SCALE AS NOTED
DRAWN BY T.M. DATE MAY 22, 1961
APPROVED BY
CHECKED BY ZEC
CHIEF BRIDGE ENGINEER

DR. No.
Dwg. No. C-352

STRUCTURE 2-E

REGISTERED PROFESSIONAL ENGINEER NO. 2164 J. R. NEWVILLE STATE OF UTAH

DESIGN AND DRAWING BY
WESTERN ENGINEERS, INC. AND
EDWARDS AND KELCEY
CONSULTING ENGINEERS

SUBMITTED BY J. R. Newville
CHIEF ENGINEER
UTAH ENGR. LIC. NO. 2164

## ABUTMENTS NO. 1, 2, 3, & 4

ON

-0"

NOTES:
FOR FOOTING LOCATION PLAN SEE SHEET NO. 6
FOR ELEVATIONS OF WINGWALLS & FOOTING REINF. SEE SHEET No. 11
FOR ANCHOR BOLT LOCATION PLAN SEE SHEET No. 10.
FOR SECTIONS NOT SHOWN SEE SHEET No. 10.
FOR EXP. & CONTR. JT. DETAILS SEE SHEET No. 10.

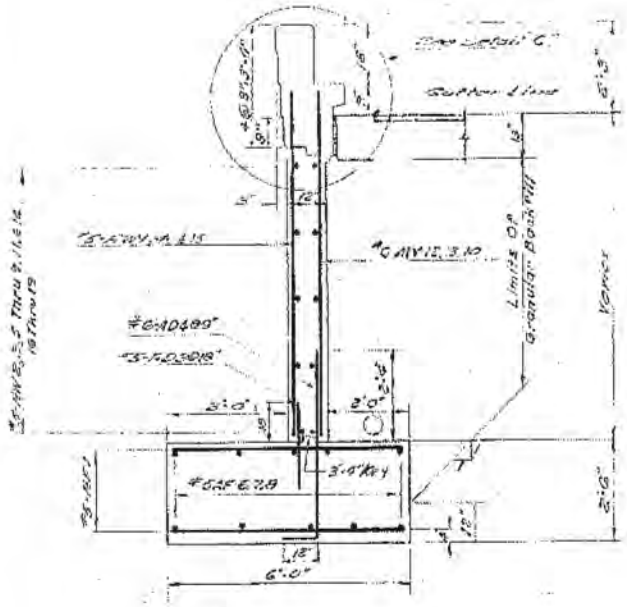


SECTION J-J
SCALE: 1/2" = 1'-0"

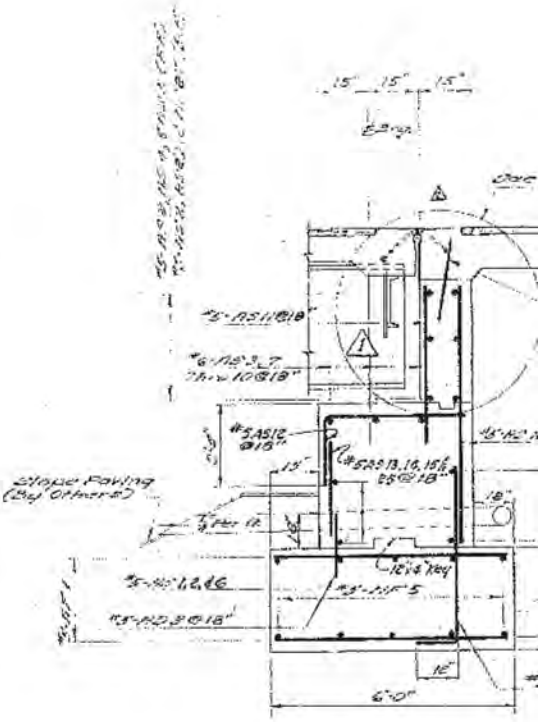


SECTION D-D
SCALE 1/2" = 1'-0"

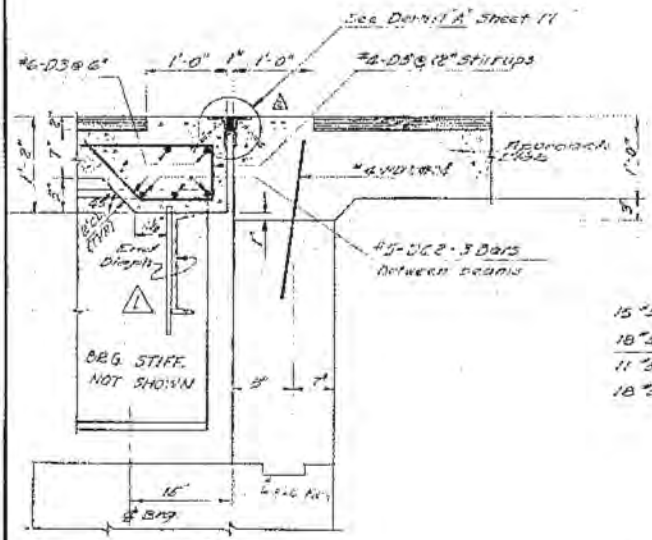


DETAIL "B"
SCALE: 1" = 1'-0"

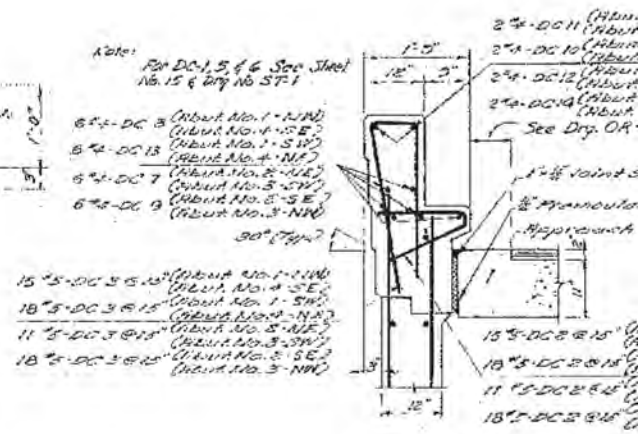


DETAIL "C"
SCALE: 3/4" = 1'-0"

FOR

| FED. ROAD DIST. NO. | STATE | FED. AID PROJ. NO. | FISCAL YEAR | SHEET NO. | TOTAL SHEETS |
|---|---|---|---|---|---|
| UT. | UTAH | I-15-6(12)270 | POST WAR | 14 | 16 |

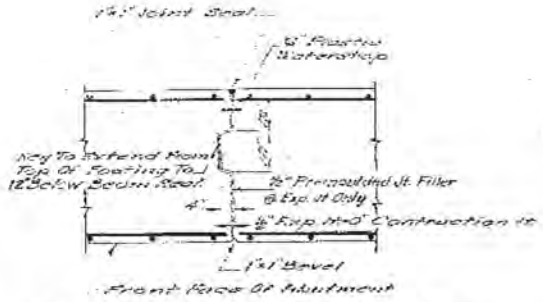


## EXPANSION & CONTRACTION JOINT DETAIL

SCALE: 1/2" = 1'-0"

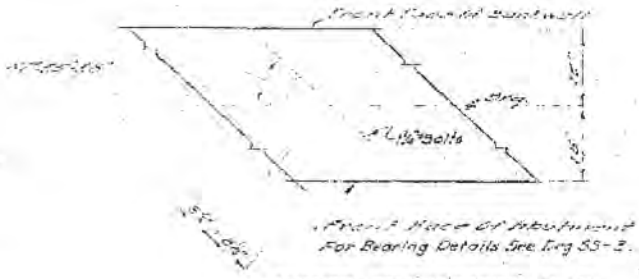


## ANCHOR BOLT LOCATION PLAN

SCALE: 1/2" = 1'-0"

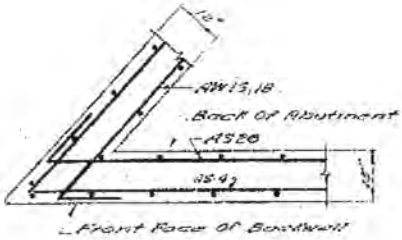


## SECTION G-G

SCALE: 1/2" = 1'-0"

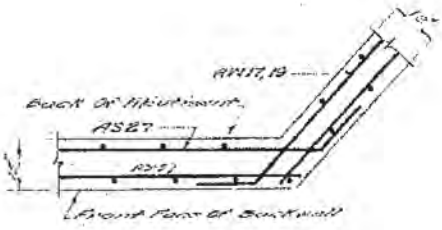


## SECTION E-E

SCALE: 1/2" = 1'-0"

Note:
See Sheets 8 & 9 Of 19 Sheets For Location Of Sections.

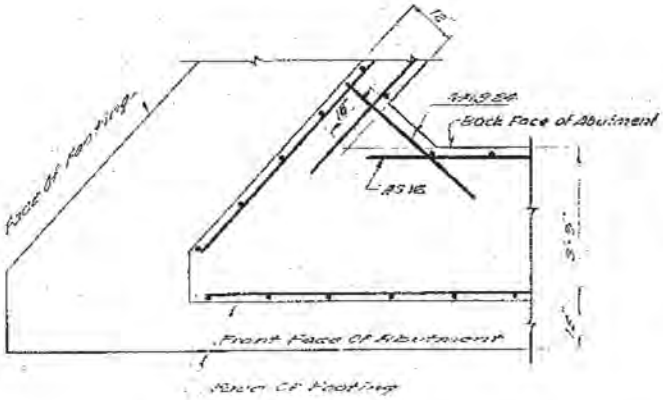


## SECTION H-H

SCALE: 1/2" = 1'-0"

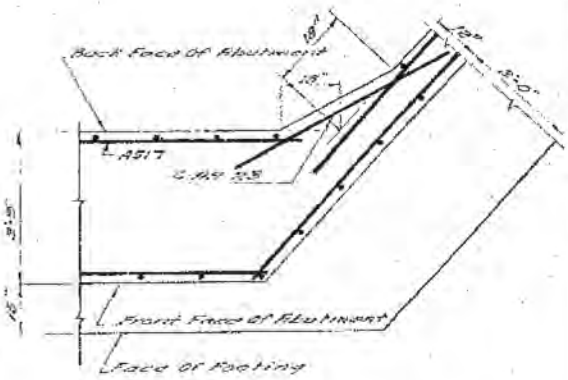


## SECTION F-F

SCALE: 1/2" = 1'-0"

## ABUTMENT DETAILS

| NO. | BY | DATE | REMARKS |
|---|---|---|---|
| 2 | RJB | 6-6-62 | Add angles @ deck joints |
| 1 | ADO | 9-12-61 | END DIAPHRAGMS |

REVISIONS

DESIGN AND DRAWING BY
WESTERN ENGINEERS, INC. AND
EDWARDS AND KELCEY
CONSULTING ENGINEERS

SUBMITTED BY J. R. Newville, CHIEF ENGINEER

UTAH ENGR. LIC. NO. 2164

REGISTERED PROFESSIONAL ENGINEER NO. 2164 J. R. NEWVILLE STATE OF UTAH

SHEET 10 OF 19 SHEETS

UTAH STATE ROAD COMMISSION
SALT LAKE CITY, UTAH
BRIDGE DEPARTMENT

LINDON U.P. & ST. RTE. 114 OVERPASS

331'-4½" O. TO O. 42° X ING ∠
STA. 501+30.82 I-15-6(12)270
LEHI - PROVO UTAH COUNTY

DESIGNED BY KY SCALE AS NOTED
DRAWN BY TEM ISSUED Nov. 22, 1961
TRACED BY APPROVED D. L. Sargent, CHIEF BRIDGE ENGINEER
CHECKED BY LCG

BR. No. DWG. No. C-352

STRUCTURE 2-E

**INFORMATION ONLY**

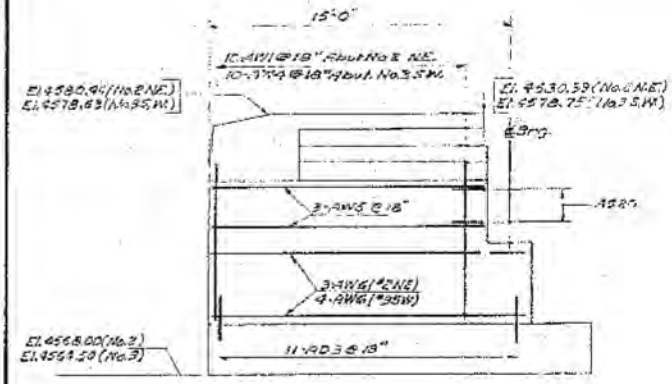


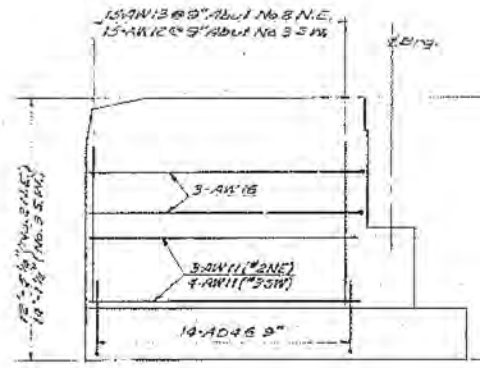


REINFORCEMENT - FRONTFACE

REINFORCEMENT - BACKFACE

NORTHEAST WINGWALL NO.2 & SOUTHWEST WINGWALL NO. 3

SCALE: 1/4" = 1'-0"

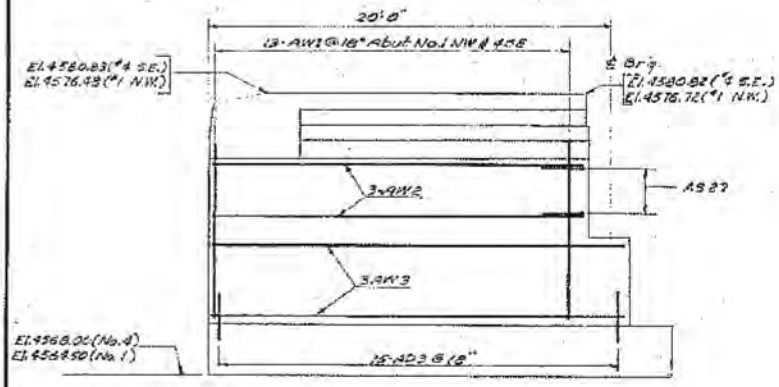


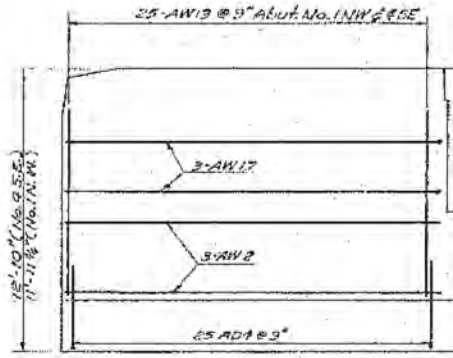


REINFORCEMENT - FRONTFACE

REINFORCEMENT - BACKFACE

NORTHWEST WINGWALL NO. 1 & SOUTHEAST WINGWALL NO. 4

SCALE: 1/4" = 1'-0"

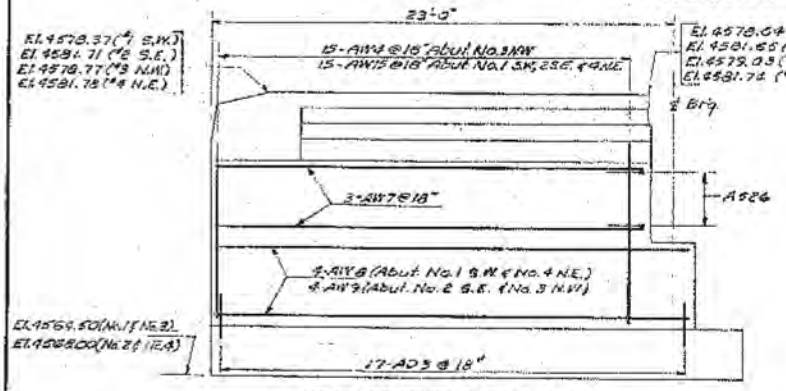


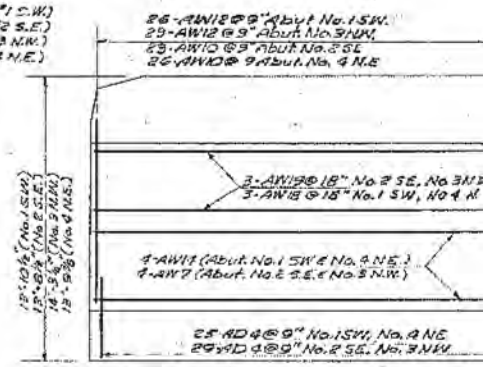


REINFORCEMENT - FRONTFACE

REINFORCEMENT - BACKFACE

SOUTHWEST WINGWALL NO. 1 & NORTHWEST WINGWALL NO. 3
SOUTHEAST WINGWALL NO. 2 & NORTHEAST WINGWALL NO. 4

SCALE: 1/4" = 1'-0"

DGN Files: IP_PWBridge\16721\4433_C-052-11_Formrebar.dgn
02-MAY-2005

| FED. ROAD DIST. NO. | STATE | FED. AID PROJ. NO. | FISCAL YEAR | SHEET NO. | TOTAL SHEETS |
|---|---|---|---|---|---|
| UT. | UTAH | I-15-6(12)270 | POST WAR | 15 | |

17

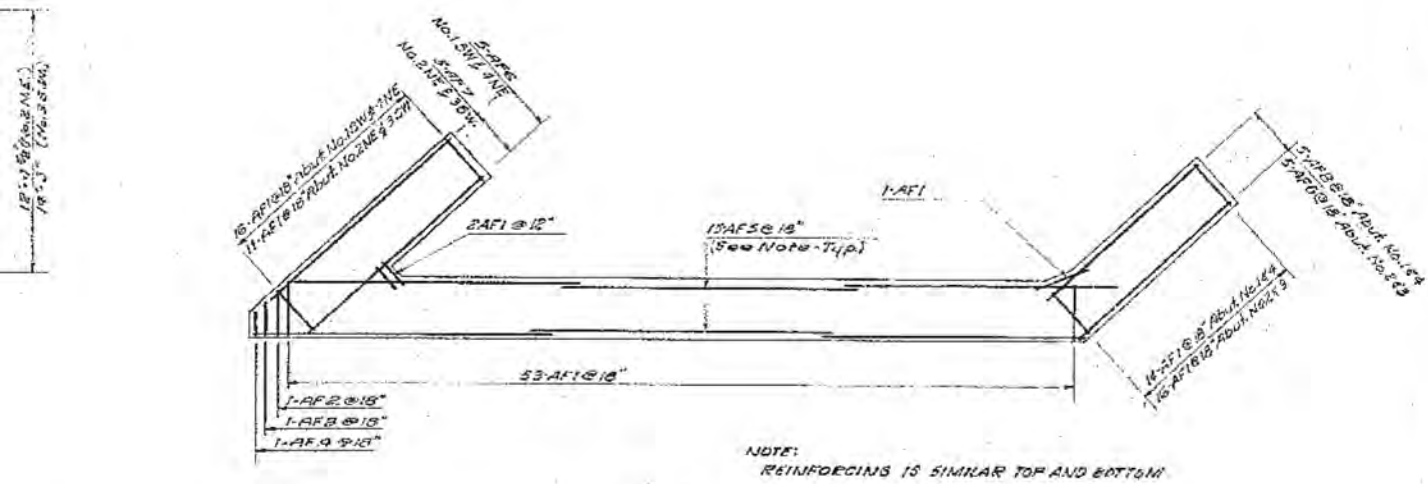


## PLAN OF FOOTING
## ABUTMENTS NO.1, NO.2, NO.3, & NO.4

SCALE: 1/8" = 1'-0"

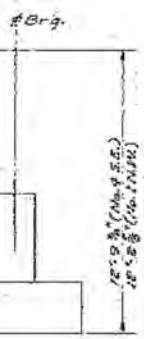

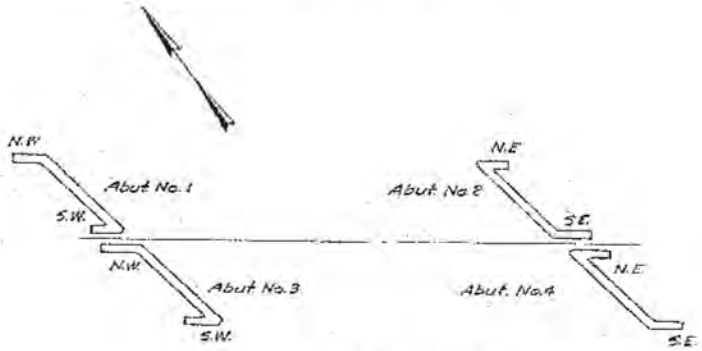


## KEY PLAN

SCALE: 1" = 50'-0"

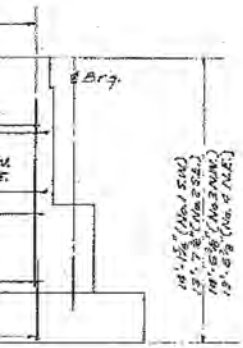

**FOR INFORMATION ONLY**

## ABUTMENT DETAILS

SHEET 11 OF 19 SHEETS

UTAH STATE ROAD COMMISSION
SALT LAKE CITY, UTAH
BRIDGE DEPARTMENT

**LINDON U.P. & ST. RTE. 114 OVERPASS**

331'-4 1/16" O. TO O. 42° XING ∠
STA. 501+90.62 I-15-6(12)270
LEHI-PROVO UTAH COUNTY

DESIGNED BY H. Y. SCALE AS NOTED
DRAWN BY J.K. ISSUED May 22, 1961
TRACED BY APPROVED D. L. Sargent
CHECKED BY CEC EEW CHIEF BRIDGE ENGINEER

BR. NO. DWG. NO. C-352

STRUCTURE 2-E

DESIGN AND DRAWING BY
WESTERN ENGINEERS, INC. AND
EDWARDS AND KELCEY
CONSULTING ENGINEERS

SUBMITTED BY J. R. Nowville CHIEF ENGINEER
UTAH ENGR. LIC. NO. 2164

NO. 2164 J. R. NOWVILLE STATE OF UTAH

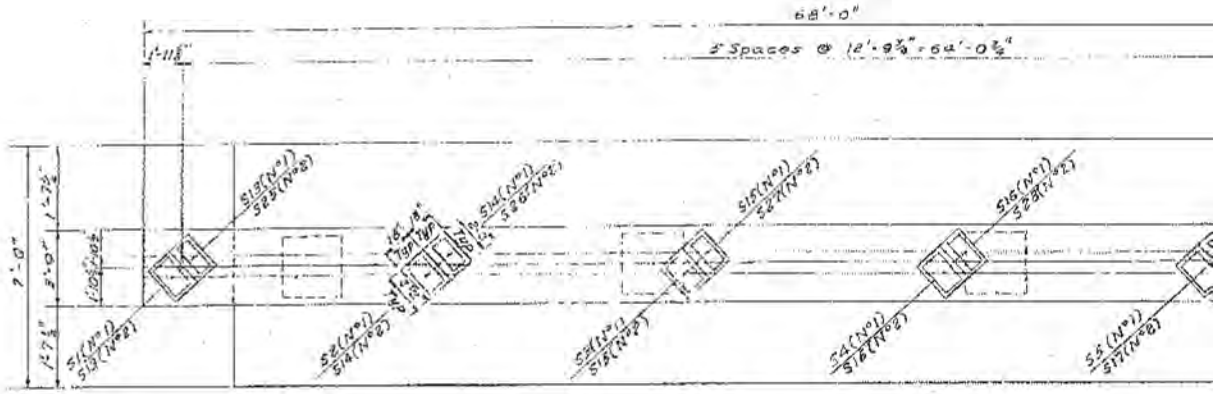


**PLAN - PIERS NO. 1 & NO. 2**
SCALE: 1/4" = 1'-0"

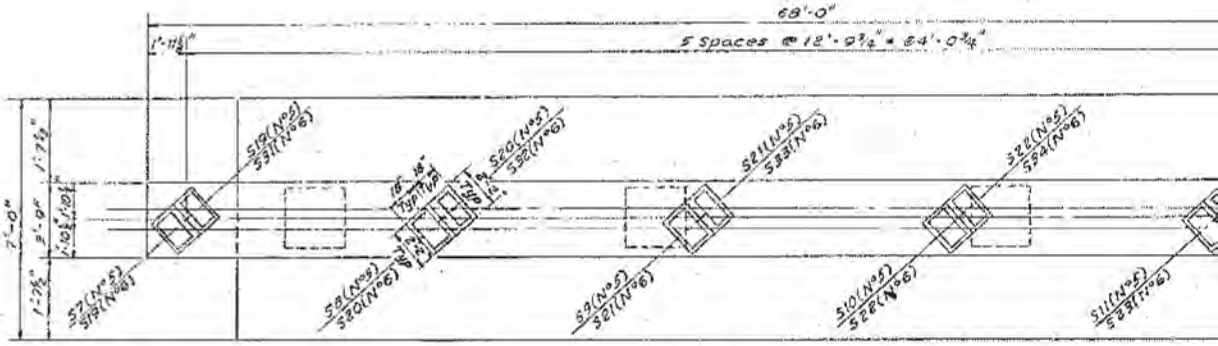


**PLAN - PIERS NO. 5 & NO. 6**
SCALE: 1/4" = 1'-0"

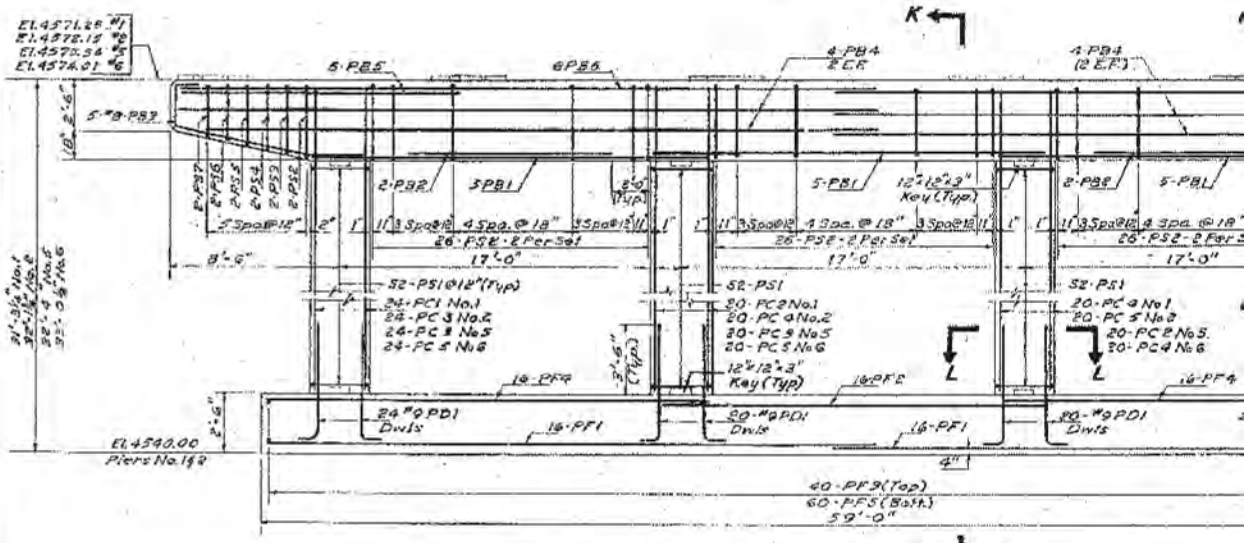


**ELEVATION - PIERS NO. 1, NO. 2, NO. 5 & NO. 6**
SCALE: 1/4" = 1'-0"

DGN Files 3P, PWPublicas\16721\4433_C-062-12_Foundation
02-MAY-2005

# FOR INFORMATION ONLY

| FED. ROAD DIST. NO. | STATE | FED. AID PROJ. NO. | FISCAL YEAR | SHEET NO. | TOTAL SHEETS |
|---|---|---|---|---|---|
| UT. | UTAH | I-15-6(12)270 | POST WAR | 18 | |

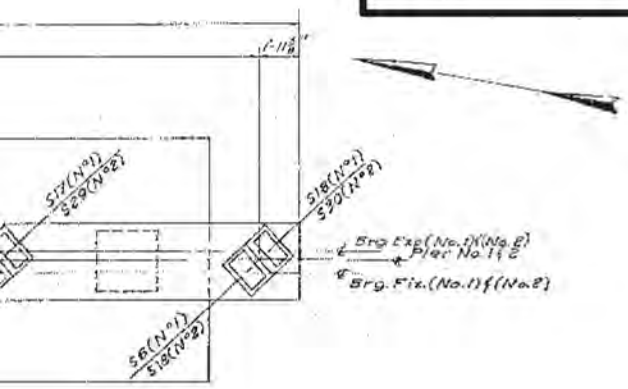


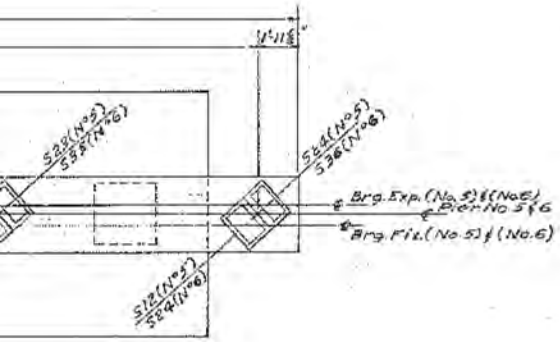


| STR. NO. | ELEVATION PIER NO.1 | STR. NO. | ELEVATION PIER NO.2 | STR. NO. | ELEVATION PIER NO.5 | STR. NO. | ELEVATION PIER NO.6 |
|---|---|---|---|---|---|---|---|
| 1 | 4571.66 | 13 | 4572.53 | 7 | 4573.6 | 19 | 4574.32 |
| 2 | 4571.28 | 14 | 4572.82 | 8 | 4573.57 | 20 | 4574.22 |
| 3 | 4572.28 | 15 | 4573.11 | 9 | 4573.60 | 21 | 4574.13 |
| 4 | 4572.59 | 16 | 4573.39 | 10 | 4573.32 | 22 | 4574.03 |
| 5 | 4572.90 | 17 | 4573.68 | 11 | 4573.24 | 23 | 4573.93 |
| 6 | 4573.20 | 18 | 4573.96 | 12 | 4573.25 | 24 | 4573.82 |
| 13 | 4571.52 | 25 | 4572.39 | 19 | 4572.50 | 31 | 4574.17 |
| 14 | 4571.83 | 26 | 4572.68 | 20 | 4573.42 | 32 | 4574.08 |
| 15 | 4572.15 | 27 | 4572.97 | 21 | 4573.35 | 33 | 4573.98 |
| 16 | 4572.45 | 28 | 4573.25 | 22 | 4573.27 | 34 | 4573.88 |
| 17 | 4572.76 | 29 | 4573.53 | 23 | 4573.19 | 35 | 4573.78 |
| 18 | 4573.06 | 30 | 4573.81 | 24 | 4573.11 | 36 | 4573.67 |

| STR. NO. | ELEVATION PIER NO.3 | STR. NO. | ELEVATION PIER NO.4 | STR. NO. | ELEVATION PIER NO.7 | STR. NO. | ELEVATION PIER NO.8 |
|---|---|---|---|---|---|---|---|
| 25 | 4573.23 | 37 | 4573.80 | [illegible] | 4574.85 | 43 | 4575.22 |
| 26 | 4573.51 | 38 | 4574.05 | 32 | 4574.72 | 44 | 4575.08 |
| 27 | 4573.77 | 39 | 4574.30 | 33 | 4574.61 | 45 | 4574.98 |
| 28 | 4574.04 | 40 | 4574.56 | 34 | 4574.49 | 46 | 4574.86 |
| 29 | 4574.30 | 41 | 4574.78 | 35 | 4574.36 | 47 | 4574.66 |
| 30 | 4574.66 | 42 | 4575.02 | 36 | 4574.24 | 48 | 4574.81 |
| 37 | 4573.09 | 49 | 4573.81 | 43 | 4574.69 | 55 | 4575.22 |
| 38 | 4573.36 | 50 | 4574.06 | 44 | 4574.57 | 56 | 4575.09 |
| 39 | 4573.62 | 51 | 4574.31 | 45 | 4574.46 | 57 | 4574.95 |
| 40 | 4573.89 | 52 | 4574.55 | 46 | 4574.34 | 58 | 4574.81 |
| 41 | 4574.15 | 53 | 4574.79 | 47 | 4574.21 | 59 | 4574.67 |
| 42 | 4574.41 | 54 | 4575.03 | 48 | 4574.09 | 60 | 4574.22 |

NOTES:

FOR ANCHOR BOLT LOCATIONS SEE SHEET 13 OF 19 SHEETS.

REINFORCEMENT AS SHOWN IN SECTION K-K SAME FOR ALL PIERS.

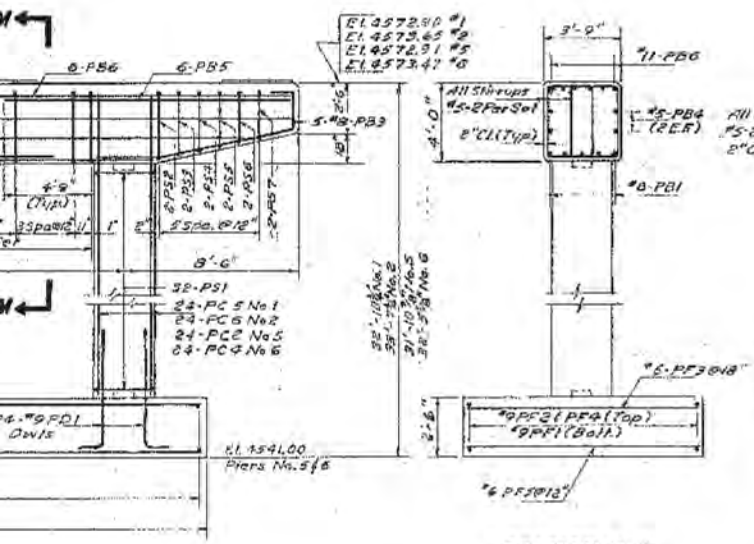


SECTION K-K
SCALE: ¼" = 1'-0"

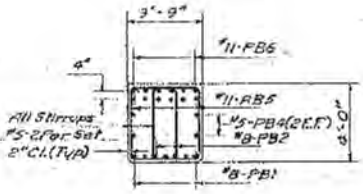


SECTION M-M
SCALE: ¼" = 1'-0"

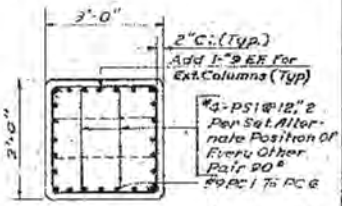


SECTION L-L
SCALE: ½" = 1'-0"

PIER NO. 1, NO. 2, NO. 5, & NO. 6

SHEET 12 OF 19 SHEETS

UTAH STATE ROAD COMMISSION
SALT LAKE CITY, UTAH
BRIDGE DEPARTMENT

LINDON U.P. & ST. RTE. 114 OVERPASS
331'-4⅛" O. TO O. 42° XING L.
STA. 501+90.62 I-15-6 (12) 270
LEHI-PROVO UTAH COUNTY

DESIGNED BY K.Y. SCALE AS NOTED
DRAWN BY T.M. DATE May 22, 1961
CHECKED BY APPROVED D.L. Sargent CHIEF BRIDGE ENGINEER
CHECKED BY V.G.

DESIGN AND DRAWING BY
WESTERN ENGINEERS, INC. AND
EDWARDS AND KELCEY
CONSULTING ENGINEERS

SUBMITTED BY D. L. Sargent CHIEF ENGINEER
UTAH ENGR. LIC. NO. 2164

DWG. No. C-352

STRUCTURE 2-E

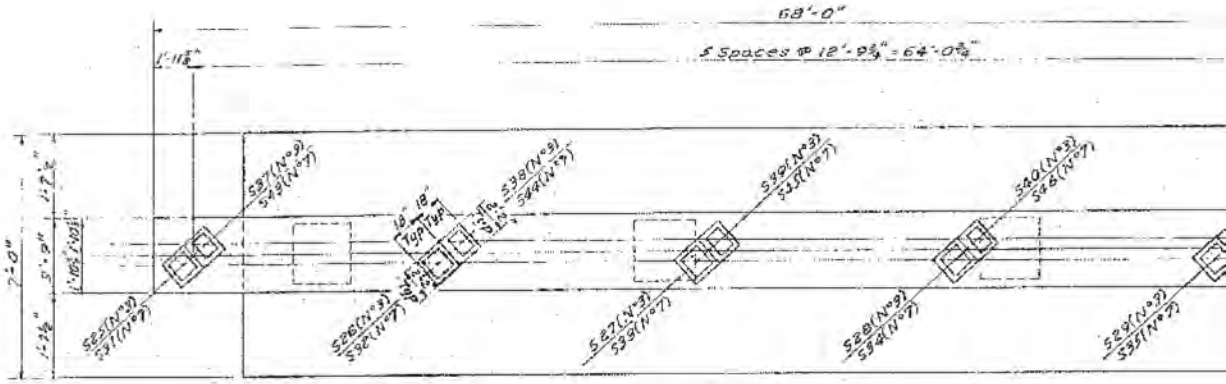


## PLAN-PIERS NO.3 & NO.7

SCALE: ¼" = 1'-0"

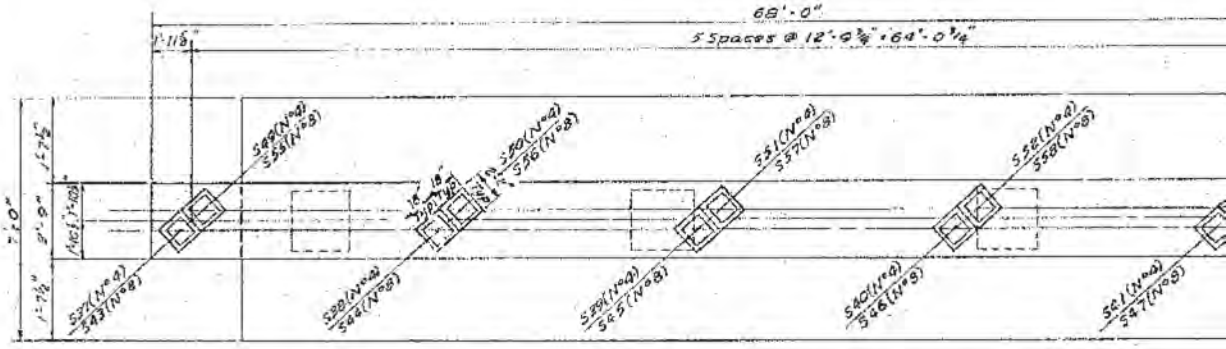


## PLAN-PIERS NO.4 & NO.8

SCALE: ¼" = 1'-0"

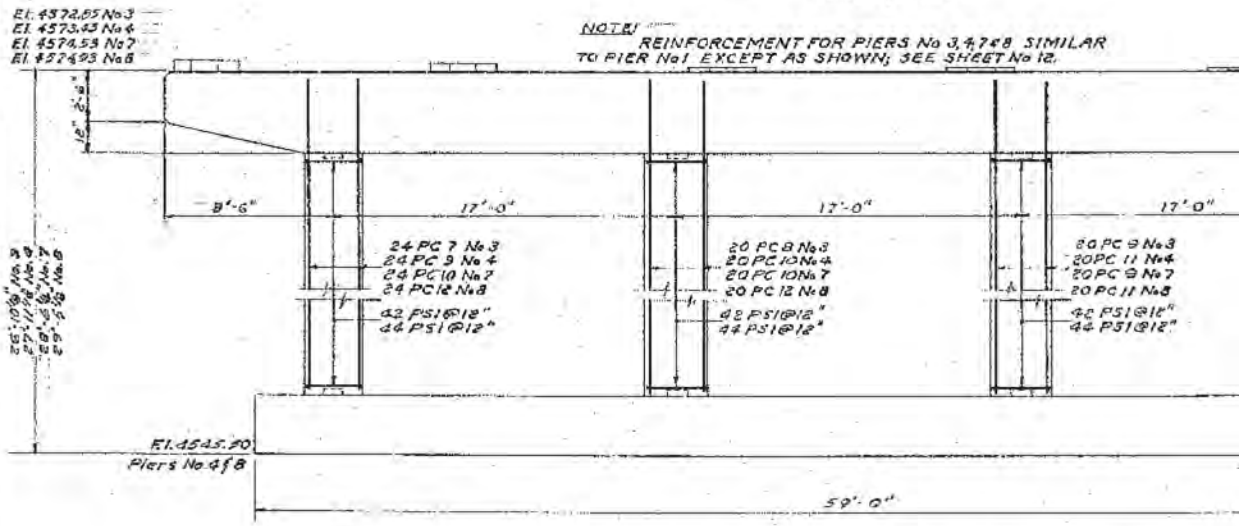


## ELEVATION-PIERS NO.3, NO.4, NO.7, & NO.8

SCALE: ¼" = 1'-0"

02-MAY-2005 DGN Files IP: PWPubnas\16721\4433.C-062-13_Form1pub.dgn

19

| FED. ROAD DIST. NO. | STATE | FED. AID PROJ. NO. | FISCAL YEAR | SHEET NO. | TOTAL SHEETS |
|---|---|---|---|---|---|
| N.T. | UTAH | I-15-6(12)270 | POST WAR | 17 | |

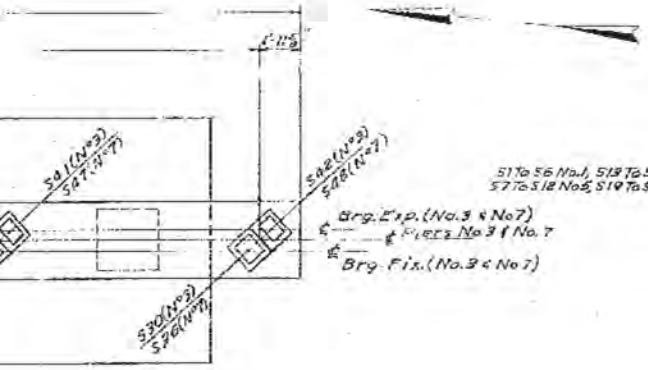


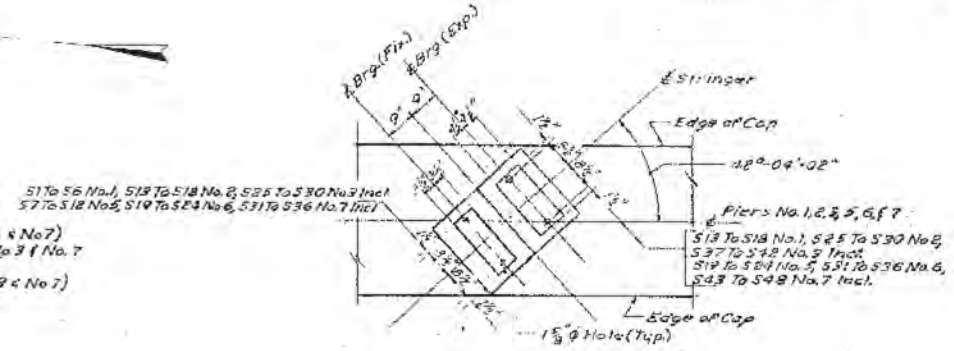


**PIERS NO.1,2,3,5,6,&7**

NOTE: FOR BEARING DETAILS SEE DRG. S3-3.

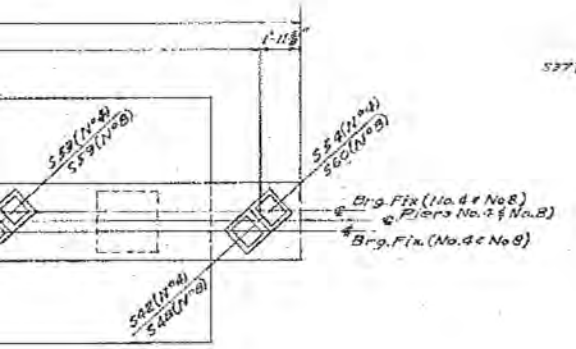


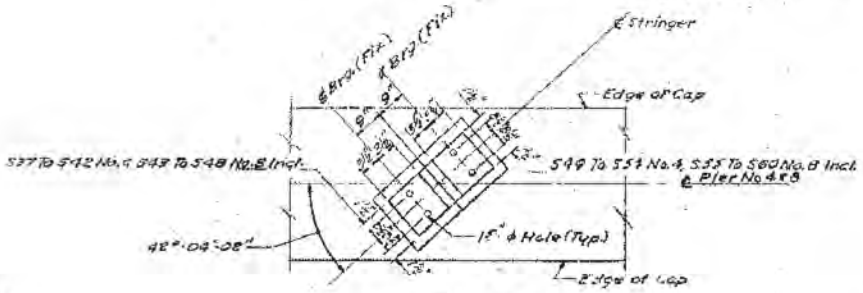


**PIERS NO. 4 & NO. 8**

**ANCHOR BOLT LOCATION PLAN**

SCALE: ½" = 1'-0"

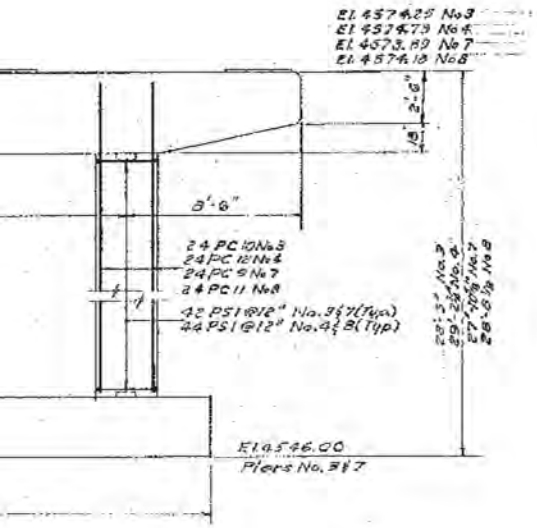


**FOR INFORMATION ONLY**

**PIERS NO. 3, NO. 4, NO. 7, & NO. 8**

SHEET 13 OF 19 SHEETS

UTAH STATE ROAD COMMISSION
SALT LAKE CITY, UTAH
BRIDGE DEPARTMENT

LINDON U.P. & ST. RTE. 114
OVERPASS
331'-4½" O. TO O. 42° XING L
STA. 801+30.62 I-15-6 (12)270
LEHI-PROVO UTAH COUNTY

DESIGNED BY KY SCALE AS NOTED
DRAWN BY TM DATE MAY 22, 1961
TRACED BY APPROVED D. L. Sargent
CHECKED BY VG
DATE C-352

STRUCTURE 2-E

REGISTERED PROFESSIONAL ENGINEER NO. 2164 J. R. NEWVILLE STATE OF UTAH

DESIGN AND DRAWING BY
WESTERN ENGINEERS, INC. AND
EDWARDS AND KELCEY
CONSULTING ENGINEERS

SUBMITTED BY J. R. Newville CHIEF ENGINEER
UTAH ENGR. LIC. NO. 2164

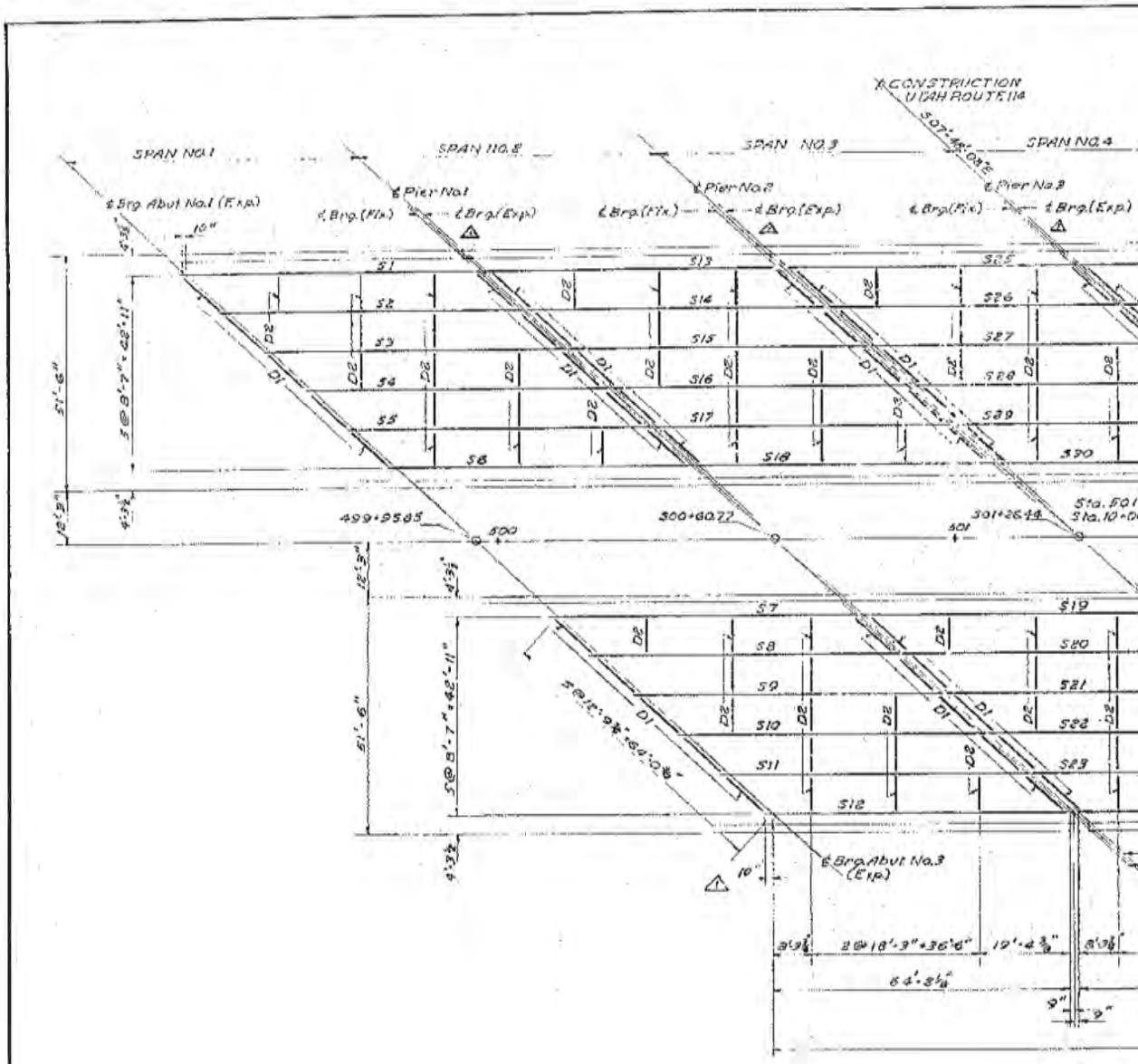


**FOR INFORMATION ONLY**

DGN Files: IP_PaPicks-115721-4433-C-352-14-ForumFoundation

02-MAY-2025

20

| FED. ROAD DIST. NO. | STATE | FED. AID BRIDGE NO. | FISCAL YEAR | SHEET NO. | TOTAL SHEETS |
|---|---|---|---|---|---|
| UT. | UTAH | I-15-6(12)270 | POST WAR | 18 | |

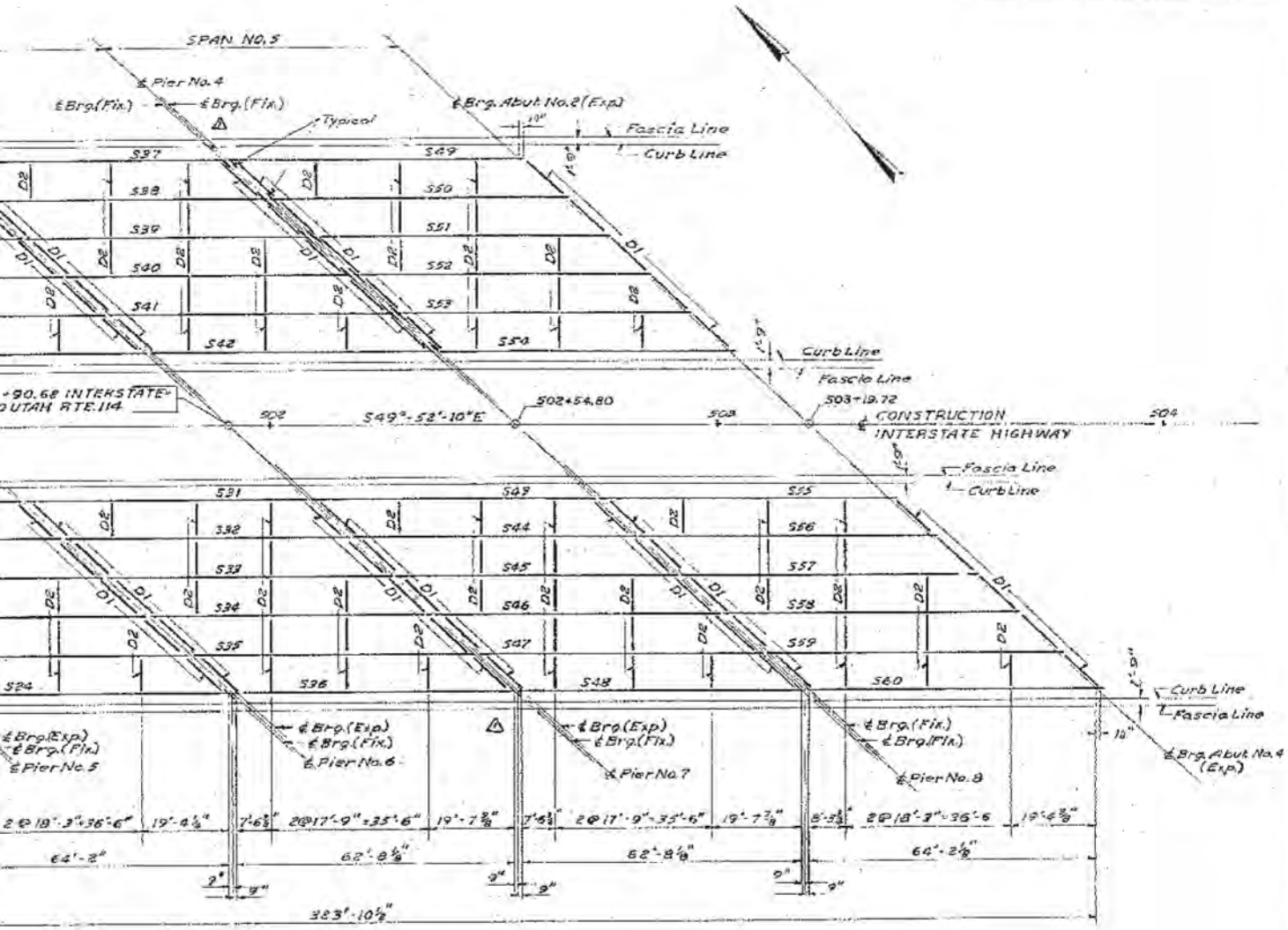


## FRAMING PLAN

SCALE: 1/16" = 1'-0"

NOTES:
FOR BEARING AND DIAPHRAGM DETAILS SEE SHEET 16.
ALL STRINGERS - 36 WF 150 & COVER PL 14" x 1" x 46'-0"
SEE DRG 55-3 FOR NOTE #7 REGARDING PAINTING OF STRUCTURAL STEEL.

FRAMING PLAN

SHEET 14 OF 18 SHEETS

| NO | BY | DATE | REMARKS |
|---|---|---|---|
| 2 | RJB | 1-24-62 | Elim. Int. Dia Bonds - No Clearance |
| 1 | AOD | 9-12-61 | END DIAPHRAGMS |

REVISIONS

DESIGN AND DRAWING BY
WESTERN ENGINEERS, INC. AND
EDWARDS AND KELCEY
CONSULTING ENGINEERS

SUBMITTED BY J. J. Kennville, CHIEF ENGINEER
UTAH ENGR. LIC. NO. 2164

REGISTERED PROFESSIONAL ENGINEER NO. 2164 J. J. KENNVILLE STATE OF UTAH

UTAH STATE ROAD COMMISSION
SALT LAKE CITY, UTAH
BRIDGE DEPARTMENT

LINDON U.P. & ST. RTE. 114 OVERPASS.
331'-4 1/8 O. TO O. 42 XING L
STA. 501+90.62 I-15-6(12)270
LEHI-PROVO UTAH COUNTY

DESIGNED BY W. Y. SCALE AS NOTED
DRAWN BY T.M. ISSUED May 11, 1961
TRACED BY APPROVED J. J. Kennville
CHECKED BY A.F.G. CHIEF BRIDGE ENGINEER
No. No.
DWG. No. C-352

STRUCTURE 2-E

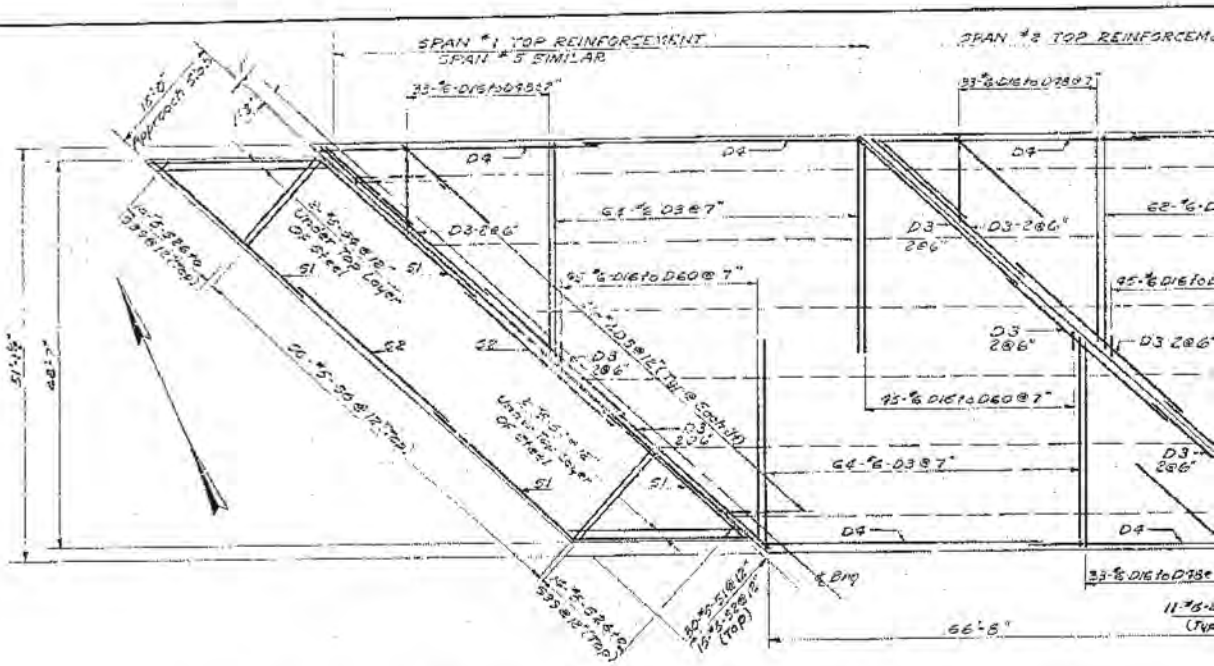


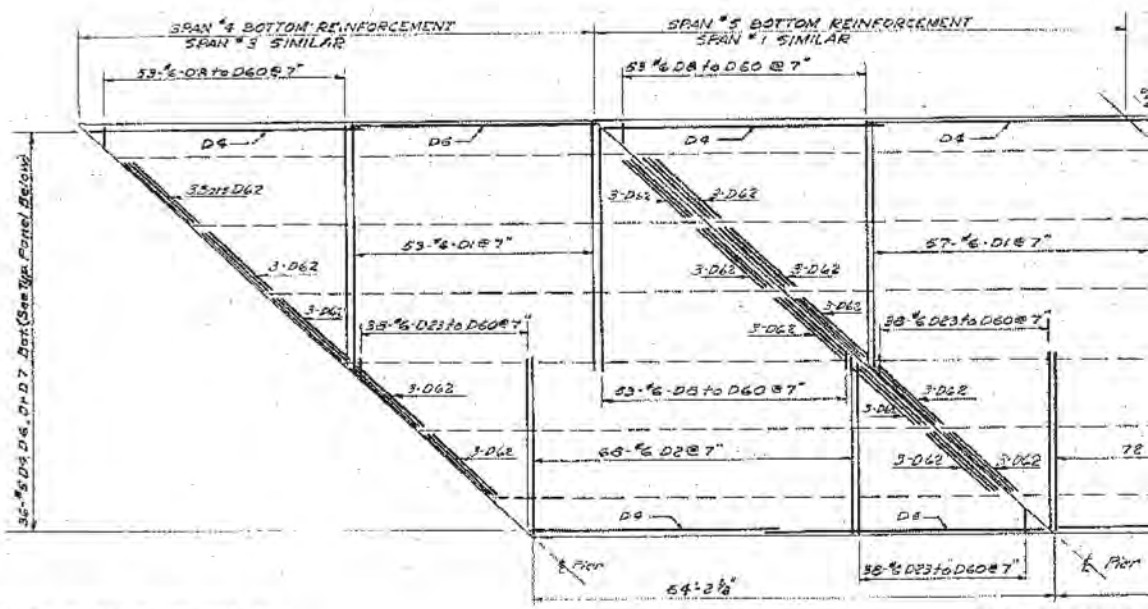


Note: For variable dimensions on approach slab & concrete shoulder on slab see DRG. DR-1.

## DECK REINFORCIN

SCALE: 1" = 10'

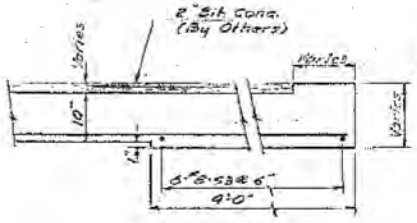


## SECTION N-N

SCALE: 3/4" = 1'-0"

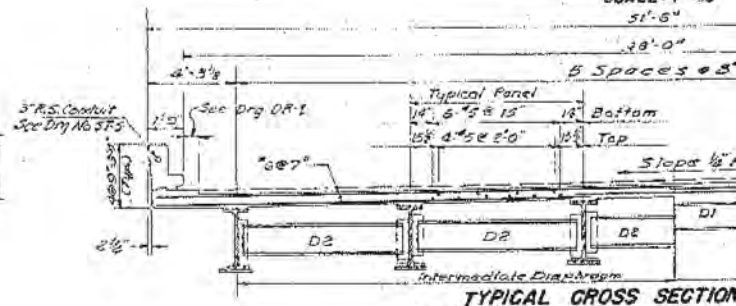


## TYPICAL CROSS SECTION

SCALE: 1/4" = 1'-0"

FC

DGN Files IP PWPubns\1672\4433.C-062-15_Formfloorm
02-MAY-2005

21

| FED. ROAD DIST. NO. | STATE | FED. AID PROJ. NO. | FISCAL YEAR | SHEET NO. | TOTAL SHEETS |
|---|---|---|---|---|---|
| U.E. | UTAH | I-15-6(12)270 | POST WAR | 19 | |

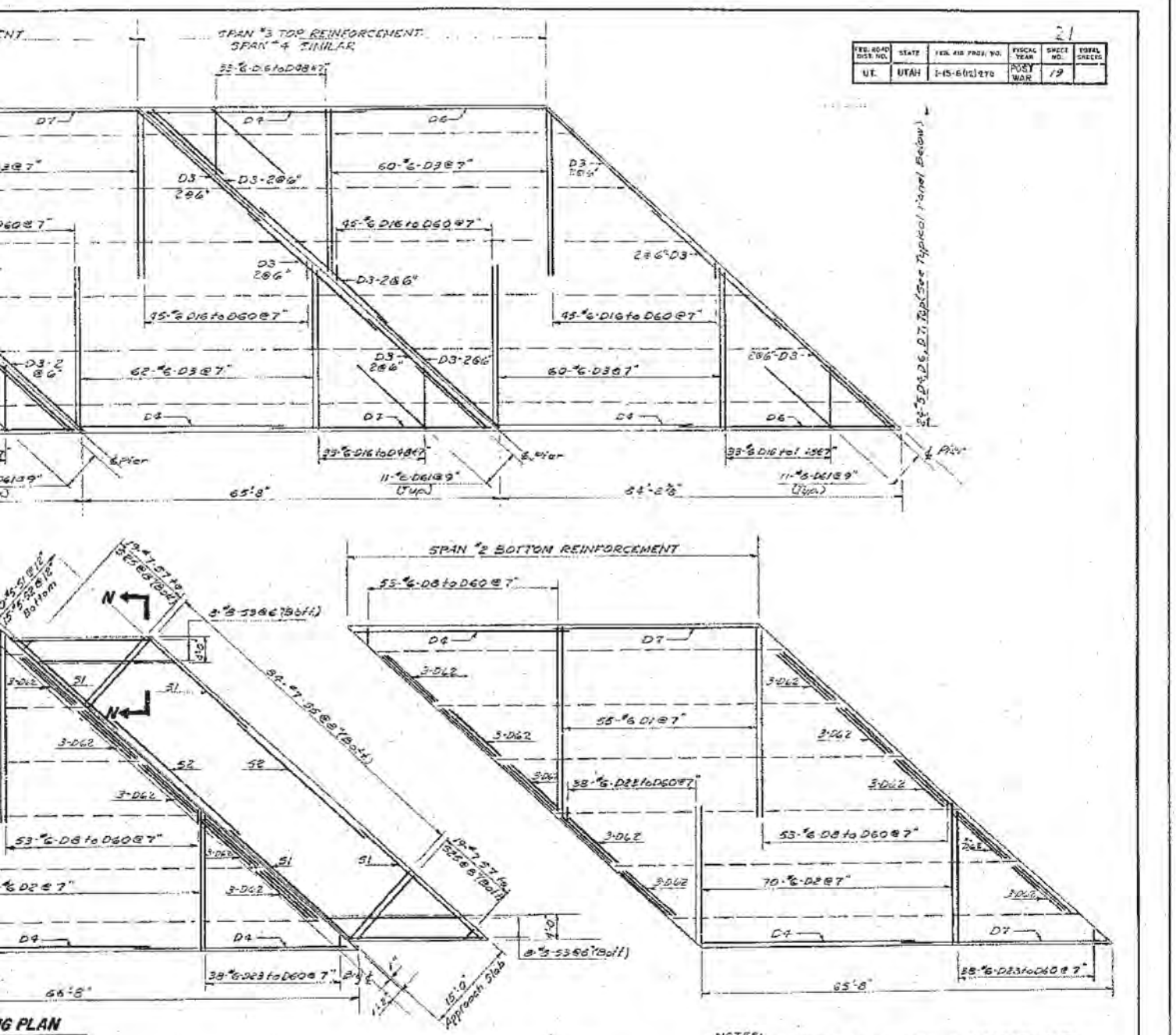


G PLAN

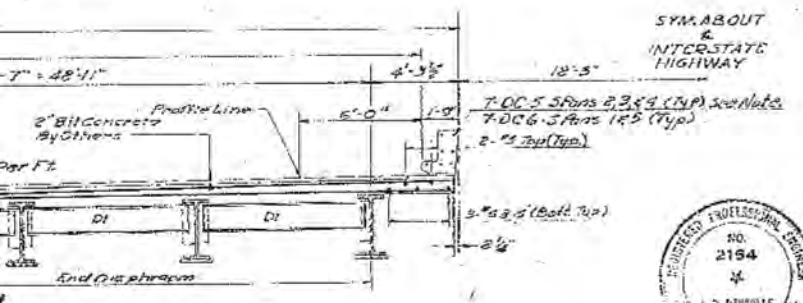


NOTES:
FOR CURB AND PARAPET REINFORCEMENT SEE DRG. ST-1.
FOR DIAPHRAGM DETAILS SEE SHEET 16 OF 19 SHEETS.

TRANSVERSE SECTION

SHEET 15 OF 19 SHEETS

UTAH STATE ROAD COMMISSION
SALT LAKE CITY, UTAH
BRIDGE DEPARTMENT

LINDON U.P. & ST. RTE. 114 OVERPASS
331'-4 1/8" O.TO O. 42° XING ∠
STA. 501+50.62 I-15-6 (12)270
LEHI-PROVO UTAH COUNTY

DESIGNED BY JLB SCALE AS NOTED
DRAWN BY JK ISSUED May 27, 1961
TRACED BY
CHECKED BY JLB
CHIEF BRIDGE ENGINEER

DWG. No. C-352

DESIGN AND DRAWING BY
WESTERN ENGINEERS, INC. AND
EDWARDS AND KELCEY
CONSULTING ENGINEERS

SUBMITTED BY
CHIEF ENGINEER
UTAH ENGR. LIC. NO. 2164

REGISTERED PROFESSIONAL ENGINEER NO. 2164 J. A. NEWVILLE STATE OF UTAH

STRUCTURE 2-E

**OR INFORMATION ONLY**

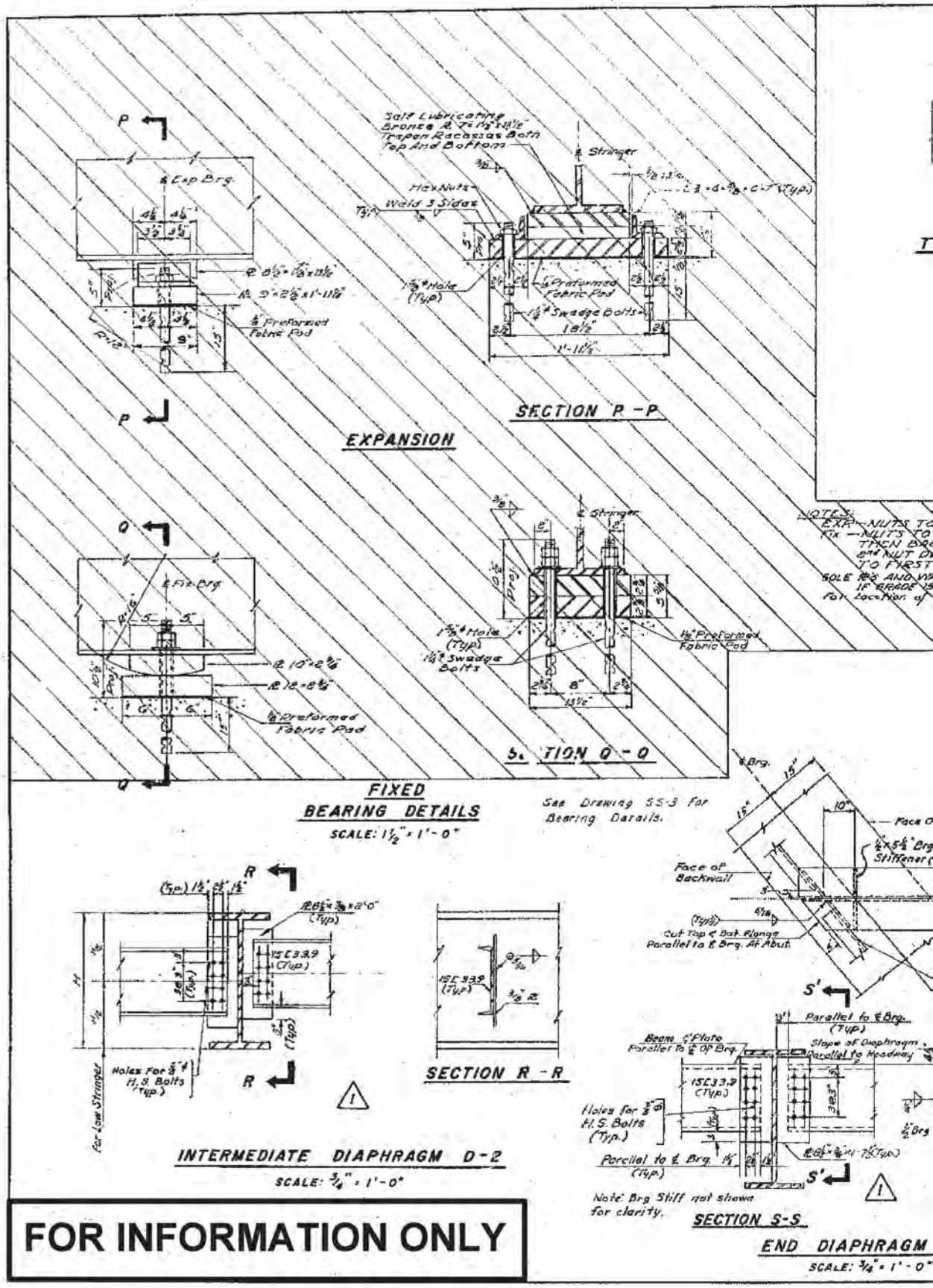


**FOR INFORMATION ONLY**

[redacted]

| FED ROAD DIST. NO. | STATE | FED AID PROJ. NO. | FISCAL YEAR | SHEET NO. | TOTAL SHEETS |
|---|---|---|---|---|---|
| UT. | UTAH | I-15-6(13)114 | POST WAR | 20 | |

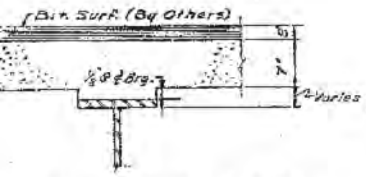


TYPICAL HAUNCH DETAIL

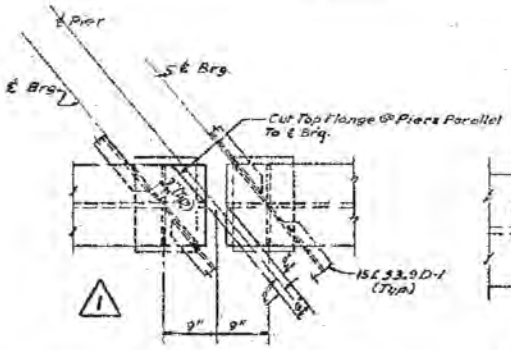


DETAILS OF STRINGERS AT PIERS

Note: See Section S-S and S'-S' For details of Brg. Stiffener And Diaphragm Connection ℞.

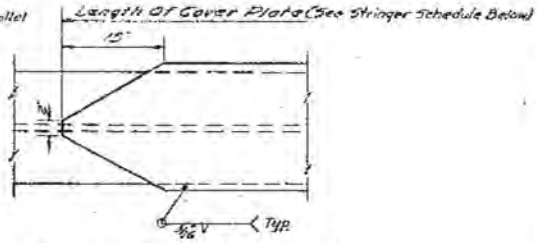


COVER PLATE DETAILS

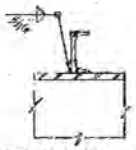

SECTION W - W

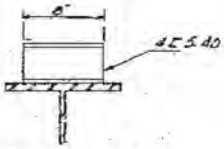


SECTION X - X

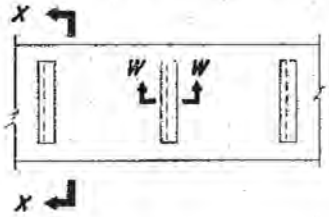


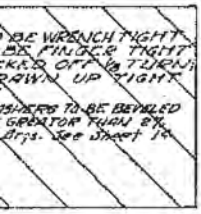


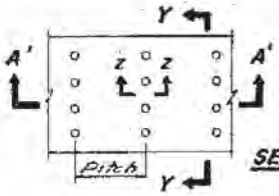


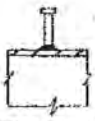

SECTION Z - Z

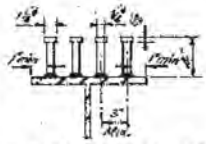


SECTION Y - Y

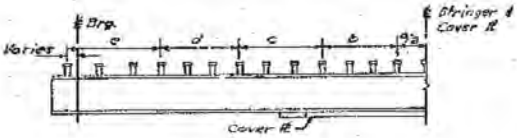


SECTION A' A'

SHEAR CONNECTOR DETAILS

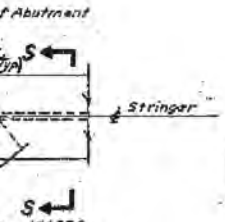


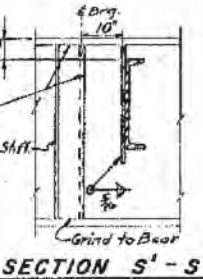


SECTION S' - S'

D-1

| EQUIVALENT CONNECTOR | SHEAR CAPACITY |
|---|---|
| Connector | Capacity |
| 4-7/8 φ Studs × 4" | 10.17" |
| 3-7/8 φ Studs × 4" | 10.38" |
| 4 C 5.4 × 10'-8" | 10.40" |

STRINGER SCHEDULE

| Stringer Number | Section | Cover ℞ | Stud Pitch e | d | c | b | a | Beam Camber Deg/Lead | Prof'ile | Total |
|---|---|---|---|---|---|---|---|---|---|---|
| S-1 to S-24 S-49 to S-60 | 36 WF 150 | 14"×1"×45'-0" | 15@5" = 6'-3" | 12@6" = 6'-0" | 12@8" = 8'-0" | 8@12" = 8'-0" | 8@14" = 9'-4" | 1 1/4" | 3/8 | 1 3/8" |
| S-25 to S-48 | 36 WF 150 | 14"×1"×45'-6" | 15@5" = 6'-3" | 12@6" = 6'-0" | 12@8" = 8'-0" | 8@12" = 8'-0" | 7@13 1/2" = 7'-10 1/2" | 1 1/2" | 3/8 | 1 7/8" |

Point Of Max. Camber

SHEAR CONNECTOR NOTE:
PAYMENT IS BASED ON WEIGHT OF 4-7/8" φ STUD CONNECTORS. EQUIVALENT CONNECTORS AS INDICATED IN THE TABLE ABOVE MAY BE USED AT THE SAME SPACING.

DIAPHRAGM CONNECTION NOTE:
7/8" φ HIGH TENSION BOLTS TO BE USED ON ALL DIAPHRAGM FIELD CONNECTIONS.

STEEL DETAILS

SHEET 18 OF 19 SHEETS

| NO. | BY | DATE | REMARKS |
|---|---|---|---|
| 1 | A.O.O. | 9-12-61 | END DIAPHRAGMS |

REVISIONS

DESIGN AND DRAWING BY
WESTERN ENGINEERS, INC. AND
EDWARDS AND KELCEY
CONSULTING ENGINEERS

SUBMITTED BY L. R. Deville CHIEF ENGINEER
UTAH ENGR. LIC. NO. 2154

UTAH STATE ROAD COMMISSION
SALT LAKE CITY, UTAH
BRIDGE DEPARTMENT

LINDON U.P. & ST. RTE. 114 OVERPASS
331'-4 1/8" O. TO O. 42° SKEW ℄
STA. 501 + 90.62 I-15-6(13)270
LEHI - PROVO UTAH COUNTY

DRAWN BY J.L.B. SCALE AS NOTED
ISSUED BY T.L.Q. ISSUED May 22, 1961
TRACED BY APPROVED D.L.L. Simpson CHIEF BRIDGE ENGINEER
CHECKED BY J.L.B.

NO. C-352

STRUCTURE 2-E

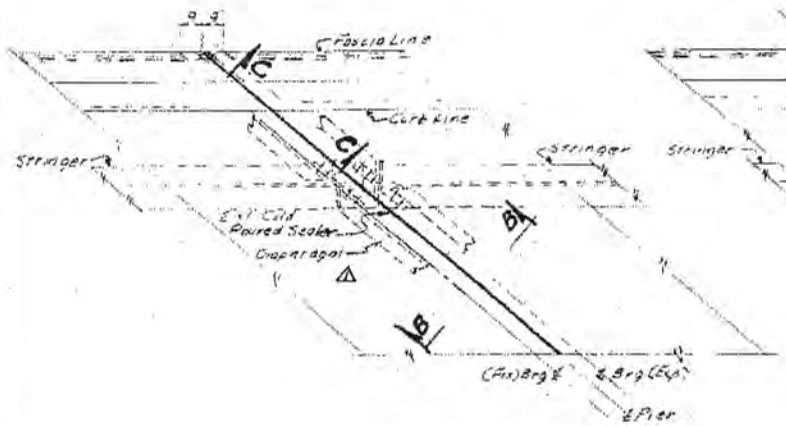


PIER NO. 1,2,3,5,6, & 7

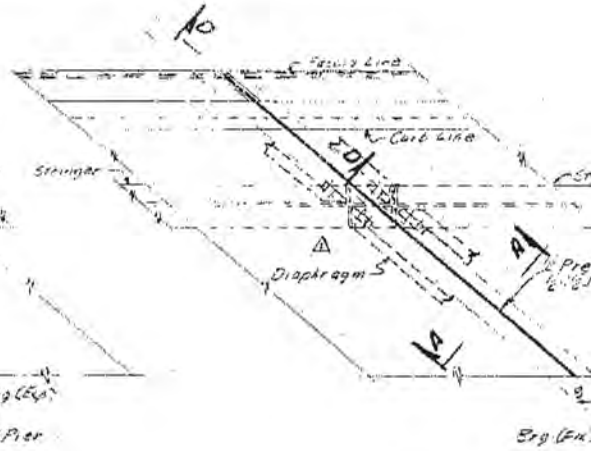


PIER

TRANSVERSE ROADWAY JOINTS.

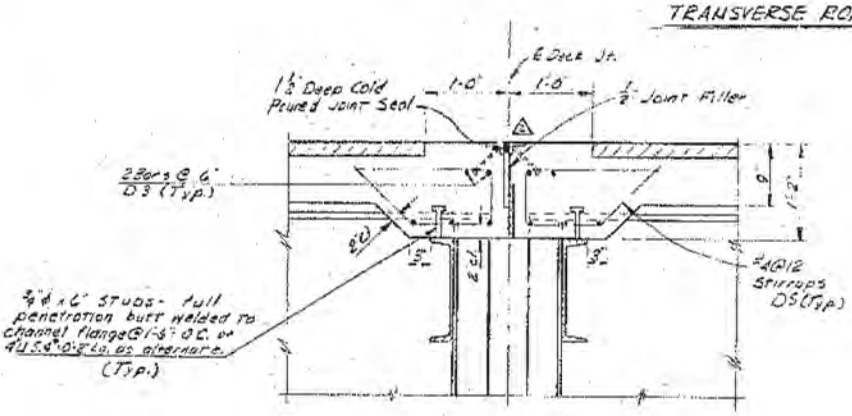


SECTION A-A

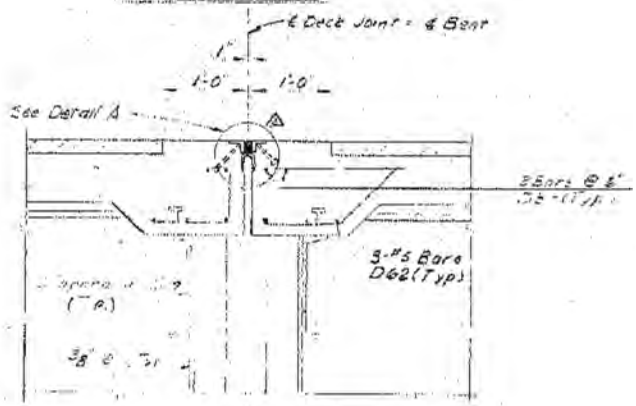


SECTION B-B

PIER NO. 4 & 8

REVISED BY DATE

REVISED BY DATE

REVISED BY DATE

REVISED BY DATE

REVISED BY DATE

DGN Files 3P PWPlans16672\4433 C-062-17 for inFolder

02-MAY-2005

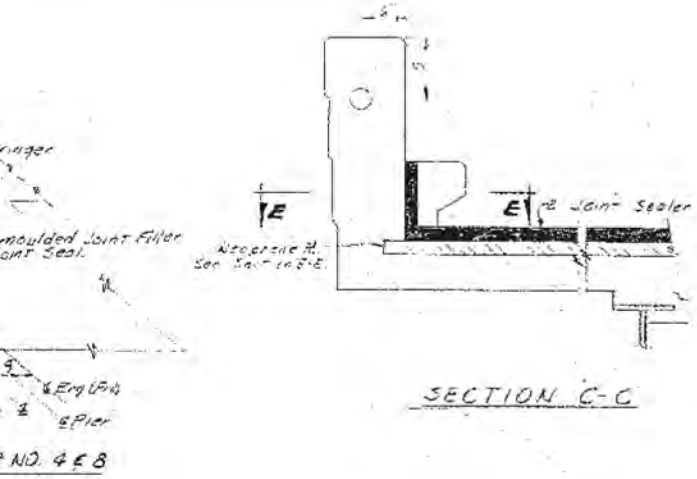


SECTION C-C

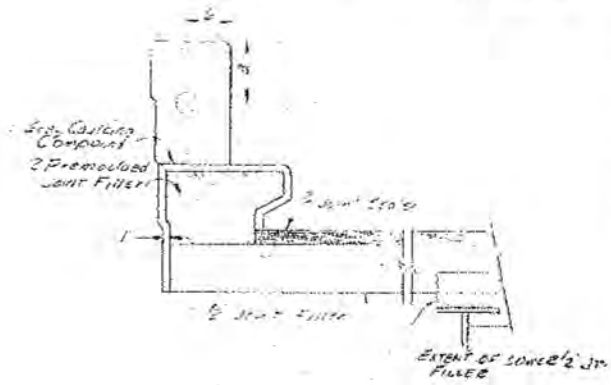


SECTION D-D

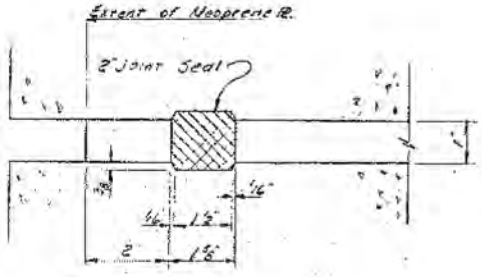


SECTION E-E

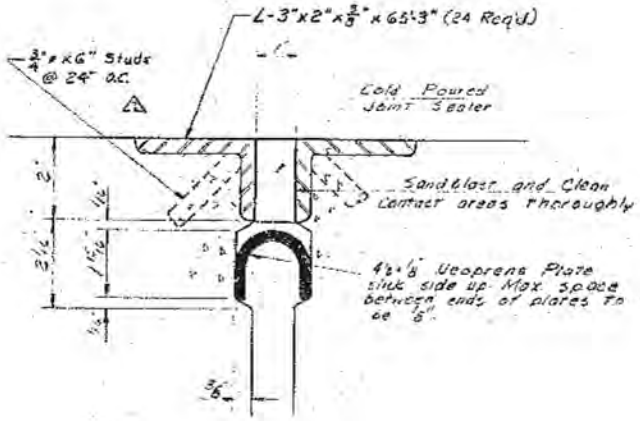


DETAIL 'A'

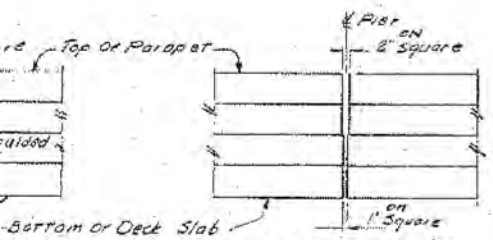


PIER NO. 1, 2, 3, 5, 6, & 7

**FOR INFORMATION ONLY**

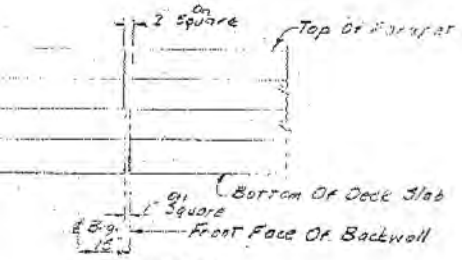


ABUTMENTS

JOINT FILLER DETAILS AT PARAPETS

| NO | BY | DATE | REMARKS |
|---|---|---|---|
| 2 | BJB | 6-6-62 | ADD OVERLAP @ DECK JOINTS |
| 1 | AOO | 9-12-61 | END DIAPHRAGMS |

REVISIONS

UTAH STATE DEPARTMENT OF HIGHWAYS
SALT LAKE CITY, UTAH
STRUCTURES DIVISION

LEHI - PROVO
LINDON OVERPASS
CONCRETE DETAILS

| | | |
|---|---|---|
| DESIGNED BY J.F. | CHECKED BY [illegible] | I-15-6(3)270 PROJECT NUMBER |
| DRAWN BY DKB | CHECKED BY A.O.O. | |
| QUANTITIES BY | CHECKED BY | 50th 90.62 STATION |
| APPROVAL RECOMMENDED BY | GROUP LEADER | |
| APPROVED May 22, 1961 DATE | D. L. Baggarly CHIEF ENGINEER | UTAH COUNTY |
| DR. NO. | DRG. NO. C-352 | 17 of 19 |

# BILL OF REINFORCING

| MARK | SIZE | LGTH. | NO. REQ. | TOTAL LENGTH | TYPE | A | B | C | D | E | F | G | H | J | K | O |
|---|---|---|---|---|---|---|---|---|---|---|---|---|---|---|---|---|
| | | | | | ABUTMENT REINFORCEMENT | | | | | | | | | | | |
| AD1 | 5 | 5'-6" | 204 | 1122'-0" | 4 | | 12" | 4'-6" | | | | | | | | |
| 2 | 4 | 2'-0" | 148 | 296'-0" | 1 | | | | | | | | | | | |
| 3 | 5 | 5'-0" | 336 | 1008'-0" | 1 | | | | | | | | | | | |
| 4 | 6 | 5'-6" | 186 | 1023'-0" | 4 | | 12" | 4'-6" | | | | | | | | |
| AF1 | 5 | 5'-9" | 676 | 3887'-0" | 1 | | | | | | | | | | | |
| 2 | | 4'-8" | 8 | 37'-4" | | | | | | | | | | | | |
| 3 | | 3'-7" | 8 | 28'-8" | | | | | | | | | | | | |
| 4 | | 2'-6" | 9 | 20'-0" | | | | | | | | | | | | |
| 5 | | 29'-0" | 120 | 3480'-0" | | | | | | | | | | | | |
| 6 | | 23'-0" | 40 | 920'-0" | | | | | | | | | | | | |
| 7 | | 15'-0" | 20 | 300'-0" | | | | | | | | | | | | |
| 8 | 5 | 20'-0" | 20 | 400'-0" | 1 | | | | | | | | | | | |
| AS1 | 5 | 12'-0" | 13 | 156'-0" | 1 | | | | | | | | | | | |
| 2 | 5 | 25'-0" | 104 | 2600'-0" | | | | | | | | | | | | |
| 3 | 6 | 25'-0" | 24 | 600'-0" | | | | | | | | | | | | |
| 4 | 5 | 10'-0" | 12 | 120'-0" | | | | | | | | | | | | |
| 5 | 5 | 14'-0" | 12 | 168'-0" | | | | | | | | | | | | |
| 6 | 5 | 11'-0" | 11 | 121'-0" | | | | | | | | | | | | |
| 7 | 6 | 11'-0" | 4 | 44'-0" | | | | | | | | | | | | |
| 8 | 6 | 12'-6" | 8 | 100'-0" | | | | | | | | | | | | |
| 9 | 6 | 12'-0" | 8 | 96'-0" | | | | | | | | | | | | |
| 10 | 6 | 11'-0" | 4 | 44'-0" | | | | | | | | | | | | |
| 11 | 5 | 4'-6" | 216 | 972'-0" | 1 | | | | | | | | | | | |
| 12 | | 5'-6" | 220 | 1210'-0" | 4 | | 2'-3" | 3'-3" | | | | | | | | |
| 13 | | 4'-0" | 81 | 324'-0" | 1 | | | | | | | | | | | |
| 14 | | 5'-0" | 30 | 150'-0" | | | | | | | | | | | | |
| 15 | | 3'-6" | 25 | 87'-6" | | | | | | | | | | | | |
| 16 | | 7'-6" | 14 | 105'-0" | | | | | | | | | | | | |
| 17 | | 13'-0" | 16 | 208'-0" | | | | | | | | | | | | |
| 18 | | 6'-0" | 46 | 276'-0" | | | | | | | | | | | | |
| 19 | | 6'-9" | 56 | 378'-0" | | | | | | | | | | | | |
| 20 | | 6'-6" | 23 | 149'-6" | | | | | | | | | | | | |
| 21 | | 7'-9" | 51 | 395'-3" | | | | | | | | | | | | |
| 22 | | 6'-9" | 28 | 189'-0" | | | | | | | | | | | | |
| 23 | | 6'-0" | 16 | 96'-0" | | | | | | | | | | | | |
| 24 | | 4'-0" | 16 | 64'-0" | | | | | | | | | | | | |
| 25 | | 4'-6" | 52 | 234'-0" | 1 | | | | | | | | | | | |
| 26 | | 11'-0" | 12 | 132'-0" | 4 | | 1'-6" | 9'-6" | | | | | | | | |
| 27 | 5 | 16'-0" | 12 | 192'-0" | 4 | | 1'-6" | 14'-6" | | | | | | | | |
| AW1 | 5 | 5'-3" | 56 | 297'-0" | 1 | | | | | | | | | | | |
| 2 | | 18'-0" | 12 | 216'-0" | | | | | | | | | | | | |
| 3 | | 21'-6" | 6 | 129'-0" | | | | | | | | | | | | |
| 4 | | 10'-0" | 25 | 250'-0" | | | | | | | | | | | | |
| 5 | | 12'-6" | 6 | 75'-0" | | | | | | | | | | | | |
| 6 | | 14'-6" | 7 | 101'-6" | | | | | | | | | | | | |
| 7 | | 20'-6" | 20 | 410'-0" | | | | | | | | | | | | |
| 8 | | 22'-6" | 8 | 180'-0" | | | | | | | | | | | | |
| 9 | 5 | 24'-6" | 8 | 196'-0" | | | | | | | | | | | | |
| 10 | 6 | 9'-6" | 55 | 522'-6" | | | | | | | | | | | | |
| 11 | 5 | 10'-0" | 7 | 70'-0" | | | | | | | | | | | | |
| 12 | 6 | 10'-0" | 70 | 700'-0" | | | | | | | | | | | | |
| 13 | 6 | 8'-3" | 65 | 536'-3" | | | | | | | | | | | | |
| 14 | 5 | 16'-6" | 8 | 148'-0" | | | | | | | | | | | | |
| 15 | 5 | 9'-6" | 45 | 427'-6" | 1 | | | | | | | | | | | |
| 16 | 5 | 12'-6" | 6 | 75'-0" | 4 | | 1'-6" | 11'-0" | | | | | | | | |
| 17 | 5 | 19'-6" | 6 | 117'-0" | 4 | | 1'-6" | 18'-0" | | | | | | | | |
| 18 | 5 | 20'-0" | 6 | 120'-0" | 4 | | 1'-6" | 18'-6" | | | | | | | | |
| 19 | 5 | 22'-0" | 6 | 132'-0" | 4 | | 1'-6" | 20'-6" | | | | | | | | |
| | | | | | PIER REINFORCEMENT | | | | | | | | | | | |
| PB1 | 8 | 20'-0" | 120 | 2400'-0" | 1 | | | | | | | | | | | |
| 2 | 8 | 10'-0" | 32 | 320'-0" | 1 | | | | | | | | | | | |
| 3 | 8 | 13'-0" | 80 | 1040'-0" | 22 | 12" | 3'-0" | 6'-10" | 2'-2" | | | 1'-6" | | | | |
| 4 | 5 | 35'-0" | 64 | 2240'-0" | 1 | | | | | | | | | | | |
| 5 | 11 | 14'-6" | 96 | 1392'-0" | 1 | | | | | | | | | | | |
| 6 | 11 | 35'-6" | 96 | 3408'-0" | 1 | | | | | | | | | | | |
| PC1 | 9 | 28'-5" | 24 | 682'-0" | 1 | | | | | | | | | | | |
| 2 | 9 | 28'-11" | 64 | 1850'-8" | 1 | | | | | | | | | | | |
| 3 | 9 | 29'-3" | 68 | 1989'-0" | 1 | | | | | | | | | | | |
| 4 | 9 | 29'-6" | 84 | 2478'-0" | 1 | | | | | | | | | | | |
| 5 | 9 | 29'-11" | 88 | 2632'-8" | 1 | | | | | | | | | | | |

| MARK | SIZE | LGTH. | NO. REQ. | TOTAL LENGTH | TYPE | A | B | C | D | E |
|---|---|---|---|---|---|---|---|---|---|---|
| PC6 | 9 | 30'-9" | 24 | 738'-0" | 1 | | | | | |
| 7 | 9 | 23'-11" | 24 | 574'-0" | | | | | | |
| 8 | 9 | 24'-5" | 20 | 488'-4" | | | | | | |
| 9 | 9 | 24'-11" | 88 | 2192'-8" | | | | | | |
| 10 | 9 | 25'-3" | 88 | 2222'-0" | | | | | | |
| 11 | 9 | 25'-9" | 64 | 1648'-0" | | | | | | |
| 12 | 9 | 26'-3" | 68 | 1785'-0" | 1 | | | | | |
| PD1 | 9 | 6'-9" | 704 | 4752'-0" | 4 | | 12" | 5'-9" | | |
| PF1 | 9 | 30'-6" | 256 | 7808'-0" | 1 | | | | | |
| 2 | 9 | 19'-0" | 128 | 2432'-0" | 1 | | | | | |
| 3 | 5 | 11'-6" | 320 | 3680'-0" | 1 | | | | | |
| 4 | 9 | 21'-9" | 256 | 5568'-0" | 1 | | | | | |
| 5 | 6 | 11'-6" | 480 | 5520'-0" | 1 | | | | | |
| PS1 | 4 | 9'-5" | 1520 | 14440'-0" | 12 | 5" | 1'-8" | 2'-8" | 1'-6" | 2'-8" |
| 2 | 5 | 12'-8" | 656 | 8,309'-0" | 12 | 6" | 2'-2" | 5'-8" | 2'-2" | 3'-8" |
| 3 | 5 | 12'-0" | 32 | 384'-0" | 12 | 6" | | 5'-4" | | 3'-4" |
| 4 | 5 | 11'-8" | 32 | 373'-4" | 12 | 6" | | 3'-2" | | 3'-2" |
| 5 | 5 | 11'-2" | 32 | 357'-4" | 12 | 6" | | 2'-11" | | 2'-11" |
| 6 | 5 | 10'-10" | 32 | 346'-8" | 12 | 6" | | 2'-9" | | 2'-9" |
| 7 | 5 | 10'-4" | 32 | 330'-8" | 12 | 6" | 2'-2" | 2'-6" | 2'-8" | 2'-6" |
| PC1 | 5 | 8'-1½" | 1072 | 8,710'-0" | 24 | 8" | 2'-10½" | 2'-7" | 1'-0" | 1'-0" |
| 2 | 5 | 3'-1" | 1196 | 3,687'-8" | 20 | 1'-4½" | 1'-8½" | | | |
| 3 | 5 | 6'-0" | 124 | 744'-0" | 26 | | 2'-10" | 8" | 2'-6" | |
| 4 | — | — | — | — | | | | | | |
| 5 | 4 | 33'-0" | 168 | 5544'-0" | 1 | | | | | |
| 6 | 4 | 33'-9" | 112 | 3780'-0" | 1 | | | | | |
| 7 | 4 | 11'-6" | 12 | 138'-0" | 1 | | | | | |
| 8 | 4 | 17'-6" | 12 | 210'-0" | 1 | | | | | |
| 9 | 4 | 20'-0" | 12 | 240'-0" | 1 | | | | | |
| 10 | 4 | 19'-0" | 4 | 76'-0" | 6 | | 14'-6" | 4'-6" | 1" | 9" |
| 11 | 4 | 17'-6" | 4 | 70'-0" | 6 | | 13'-0" | 4'-6" | 1" | 9" |
| 12 | 4 | 11'-6" | 4 | 46'-0" | 6 | | 7'-0" | 4'-6" | 1" | 9" |
| 13 | 4 | 19'-0" | 12 | 228'-0" | 1 | | | | | |
| 14 | 4 | 20'-0" | 4 | 80'-0" | 6 | | 15'-6" | 4'-6" | 1" | 9" |
| | | | | | APPROACH SLAB REINFORCEMENT | | | | | |
| S1 | 5 | 32'-0" | 240 | 5280'-0" | 1 | | | | | |
| 2 | 5 | 31'-0" | 120 | 3720'-0" | | | | | | |
| 3 | 8 | 21'-9" | 64 | 1392'-0" | | | | | | |
| 4 | 5 | 21'-9" | 16 | 348'-0" | | | | | | |
| 5 | 7 | 14'-6" | 336 | 4872'-0" | | | | | | |
| 6 | 5 | 14'-6" | 224 | 3248'-0" | | | | | | |
| 7 | 7 | 13'-10" | 8 | 110'-8" | | | | | | |
| 8 | | 13'-3" | | 106'-0" | | | | | | |
| 9 | | 12'-8" | | 101'-4" | | | | | | |
| 10 | | 12'-0" | | 96'-0" | | | | | | |
| 11 | | 11'-6" | | 92'-0" | | | | | | |
| 12 | | 10'-10" | | 86'-8" | | | | | | |
| 13 | | 10'-5" | | 82'-0" | | | | | | |
| 14 | | 9'-8" | | 77'-4" | | | | | | |
| 15 | | 9'-0" | | 72'-0" | | | | | | |
| 16 | | 8'-5" | | 67'-4" | | | | | | |
| 17 | | 7'-10" | | 62'-8" | | | | | | |
| 18 | | 7'-3" | | 58'-0" | | | | | | |
| 19 | | 6'-8" | | 53'-4" | | | | | | |
| 20 | | 6'-0" | | 48'-0" | | | | | | |
| 21 | | 5'-5" | | 43'-4" | | | | | | |
| 22 | | 4'-10" | | 38'-8" | | | | | | |
| 23 | | 4'-3" | | 34'-0" | | | | | | |
| 24 | | 3'-8" | | 29'-4" | | | | | | |
| 25 | 7 | 3'-0" | 8 | 24'-0" | | | | | | |
| 26 | 3 | 13'-7" | 8 | 108'-8" | | | | | | |
| 27 | | 12'-8" | | 101'-4" | | | | | | |
| 28 | | 11'-10" | | 94'-8" | | | | | | |
| 29 | | 10'-11" | | 87'-4" | | | | | | |
| 30 | | 10'-0" | | 80'-0" | | | | | | |
| 31 | | 9'-1" | | 72'-8" | | | | | | |
| 32 | | 8'-3" | | 66'-0" | | | | | | |
| 33 | | 7'-4" | | 58'-8" | | | | | | |
| 34 | | 6'-5" | | 51'-4" | | | | | | |
| 35 | | 5'-6" | | 44'-0" | | | | | | |
| 36 | | 4'-8" | | 37'-4" | | | | | | |
| 37 | | 3'-9" | | 30'-0" | | | | | | |
| 38 | | 2'-10" | | 22'-8" | | | | | | |
| 39 | 5 | 2'-0" | 8 | 16'-0" | 1 | | | | | |

VERMEULE CO.

02-MAY-2005 DGN Files 1P_PWPdesks\16721\4433_C-352-18_Forum\Foundam

STEEL

| F | G | H | J | K | O |
|---|---|---|---|---|---|
| | | | | | |
| 1" | 12" | | | | |
| 1" | 12" | | | | |
| ENT | | | | | |

| MARK | SIZE | LGTH. | NO. REQ. | TOTAL LENGTH | TYPE | A | B | C | D | E | F | G | H | J | K | O |
|---|---|---|---|---|---|---|---|---|---|---|---|---|---|---|---|---|

UTAH UTAH I-15-6(12)270 POST WAR 22

BAR TYPES

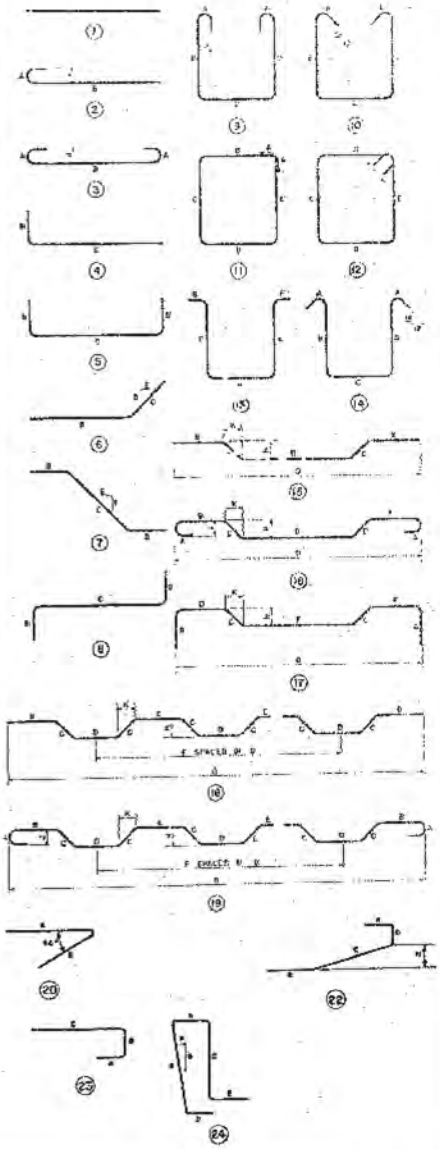


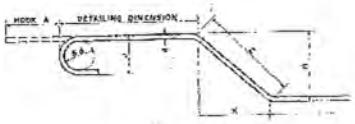


HOOK DETAIL

**FOR INFORMATION ONLY**

GENERAL NOTES

1. All placing drawings, detailing, and fabrication shall be in accordance with the "Manual of Standard Practice for Detailing Reinforced Concrete Structures (ACI 315-57)".
2. All dimensions shown for bar bending details are out-to-out of bars.

DESIGN AND DRAWING BY
WESTERN ENGINEERS, INC. AND
EDWARDS AND KELCEY
CONSULTING ENGINEERS

SUBMITTED BY CHIEF ENGINEER
UTAH STATE RD. COM.

SHEET 18 OF 19 SHEETS

UTAH STATE ROAD COMMISSION
SALT LAKE CITY, UTAH
BRIDGE DEPARTMENT

LINDON U.P. & ST. RTE. 114
OVERPASS
33'-4 1/8" O. TO O. 42 X ING L
STA. 501+90.62 I-15-6(12)270
LEHI-PROVO UTAH COUNTY

DESIGNED BY A.J.R.
TRACED BY J.K.
TESTED BY B.M.G.
CHECKED BY A.J.R.
DATE May 22, 1961
APPROVED L. L. Sorensen
CHIEF BRIDGE ENGINEER

NO. C-352

STRUCTURE 2-E

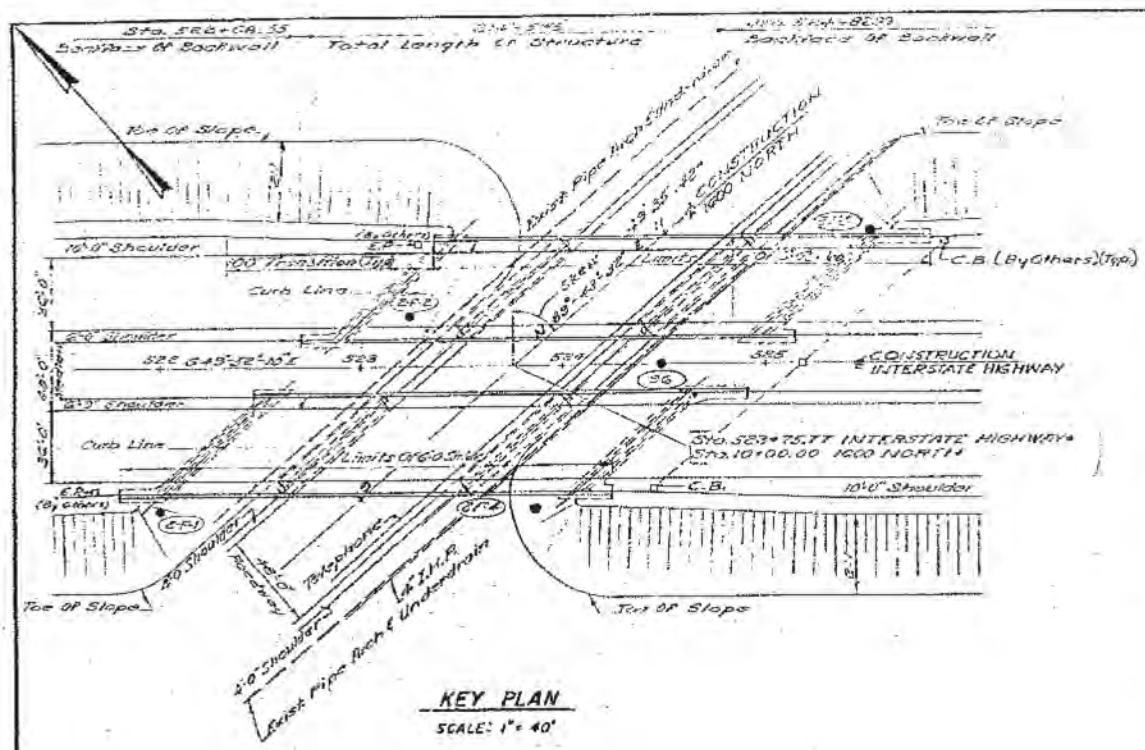


## KEY PLAN

SCALE: 1" = 40'

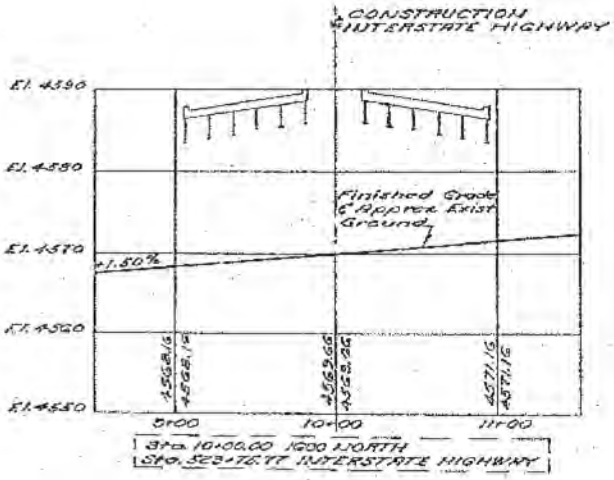


## 1600 NORTH PROFILE

SCALE 1" = 10' VERT.
1" = 50' HOR

**FOR INFORMATION ONLY**

## GENE

DESIGN SPECIFICATIONS:
A.A.S.H.O. Standard Specificat

CONSTRUCTION SPECIFICATIONS:
Materials, Construction And We
Standard Specifications For Road
Supplements Thereto Which Are

LIVE LOAD:
H 20-S16-44 Interstate Altern
Specifications Of 1957

ALLOWABLE STRESSES:
Structural Steel
Reinforcing Steel
f'c - Cast-In-Place Concrete In
f'c - Ultimate Compressive Stre

STRUCTURAL STEEL:
Unless Otherwise Noted, Struc
Designation A-Y.

CONCRETE:
Class "A" Concrete With Type II C

REINFORCEMENT:
All Reinforcing Steel Bars Sh
Conforming To A.S.T.M. Designatio
To A.S.T.M. Designation A-305.

REINFORCEMENT COVER:
Reinforcement Shall Be Acc
Following Concrete Covering Ov
Abutments And Piers - Concrete
Deck Concrete - All Cases - 1"

CHAMFERS:
Exposed Concrete Of Superstru
1/2" Fillets Unless Otherwise Noted.
3/4" Chamfers And 3/4" Fillets Unless Otherw

FOUNDATION:
Foundations May Be Altered If Necess
In Construction.

DATUM:
All Elevations Refer To U.S.C.

BENCH MARK:

SHOP DRAWING:
All Shop Drawings Shall Be Approve

DGN Files 3P, Pwpdms\16721\4433.C353-01.Fcontfoundcm
02-MAY-2005

3

| FED. ROAD DIST. NO. | STATE | FED. AID PROJ. NO. | FISCAL YEAR | SHEET NO. | TOTAL SHEETS |
|---|---|---|---|---|---|
| 4 | UTAH | I-S D-91265 | [illegible] | | |

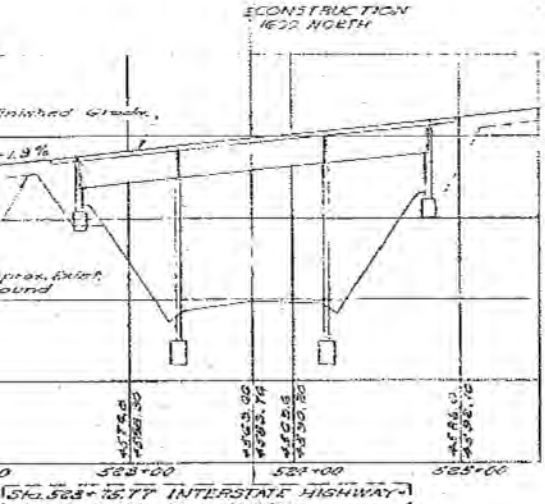


INTERSTATE HIGHWAY PROFILE

SCALE 1" = 10' VERT
1" = 50' HOR

## ESTIMATE OF QUANTITIES As Const.

| NO. | ITEM | QUANTITIES |
|---|---|---|
| 1 | EXCAVATION FOR STRUCTURES UNCLASSIFIED | 950 Cu. Yds |
| 2 | IMPORTED BORROW | 50 Cu. Yds |
| 3 | CLASS A OVERHAUL | 250 Sta Yds |
| 4 | GRANULAR BACKFILL | 980 Cu. Yds |
| 5 | CONCRETE CLASS "A" | 1651 Cu. Yds |
| 6 | REINFORCING STEEL 322,612.92 | 321,855 lbs |
| 7 | STRUCTURAL STEEL | 685,900 lbs |
| | | |
| | | |
| | | |
| 8 | 6" PERF A.C.C.M.P. UNDERDRAIN | 420 Lin. Ft. |
| 9 | ALUMINUM HANDRAIL (SINGLE RAIL) | 980 Lin. Ft. |
| 10 | 3" RIGID STEEL CONDUIT | 520 Lin. Ft. |
| | | |
| | | |
| | | |
| | | |

## ERAL NOTES

ion For Highway Bridges, 1957 Edition.

rformance Shall Be In Accordance With The State And Bridge Construction, 1960 Edition And In Effect At The Date Of Request For Bids.

ete Loading In Accordance With The A.A.S.H.O.

| | |
|---|---|
| | 18,000 p.s.i. |
| Compression | 20,000 p.s.i. |
| Tension | 1,200 p.s.i. |
| Shear | 3,000 p.s.i. |

tural Steel Shall Conform To A.S.T.M.

ow Alkali Cement Shall Be Used Throughout.

all Be New Billet Steel, Intermediate Grade, n A-15 And Shall Have Deformations Conforming

rately Placed In The Forms To Provide The er Reinforcement Unless Otherwise Specified. Against Earth - 3" Concrete Above Ground - 2"

ctures Shall Have 1½" Chamfers And Edges Of Concrete Deck And Sidewalks Shall Have ize Noted.

ary, As Approved By Engineer, To Suit Conditions Encountered

ed G.S. Mean Sea Level Datum Of 1934.

ed Before Fabrication Of Steel

## INDEX OF SHEETS


| SHEET NUMBER | DESCRIPTION |
|---|---|
| 1 | KEY PLAN & INDEX SHEET |
| 2 | DECK PLAN & ELEVATION |
| 3 & 4 | BORING LOGS |
| 5 | FOUNDATION PLAN |
| 6 | ABUTMENTS NO. 1 & NO. 3 |
| 7 | ABUTMENTS NO. 2 & NO. 4 |
| 8 & 9 | ABUTMENT DETAILS |
| 10 | PIERS |
| 11 | FRAMING PLAN |
| 12 | TRANSVERSE SECTION |
| 13 | CONCRETE DETAILS |
| 14 | STEEL DETAILS |
| 15 & 16 | REINFORCING SCHEDULE |
| | RAILING DETAILS (DRG. NO. ST1) |
| | |
| | OVERHEAD LIGHTING DETAILS (DRG. NO. ST5) |
| | |


KEY PLAN & INDEX SHEET

7-8-60 RDJ
Rev. 6-23-60 RJB

REGISTERED PROFESSIONAL ENGINEER NO. 2164 J. R. EDWILLE STATE OF UTAH

DESIGN AND DRAWING BY
WESTERN ENGINEERS, INC. AND
EDWARDS AND KELCEY
CONSULTING ENGINEERS

SUBMITTED BY [signature] CHIEF ENGINEER
UTAH ENGR. LIC. NO. 2164

SHEET 1 OF 16 SHEETS

UTAH STATE ROAD COMMISSION
SALT LAKE CITY, UTAH
BRIDGE DEPARTMENT

OREM 1600 NORTH INTERCHANGE
214'-5 3/16" O.TO.O. 140° XING ∠
STA 523+75.77 I-15-6 (91265)
L.E.M.- PROVO UTAH COUNTY

DESIGNED BY R.T.S. DATE 6-28-60
DRAWN BY R.E. DATE 6-28-60
TRACED BY
CHECKED BY R.Y. CHIEF BRIDGE ENGINEER

DR. NO.
DWG. NO. C-353

STRUCTURE 2-F

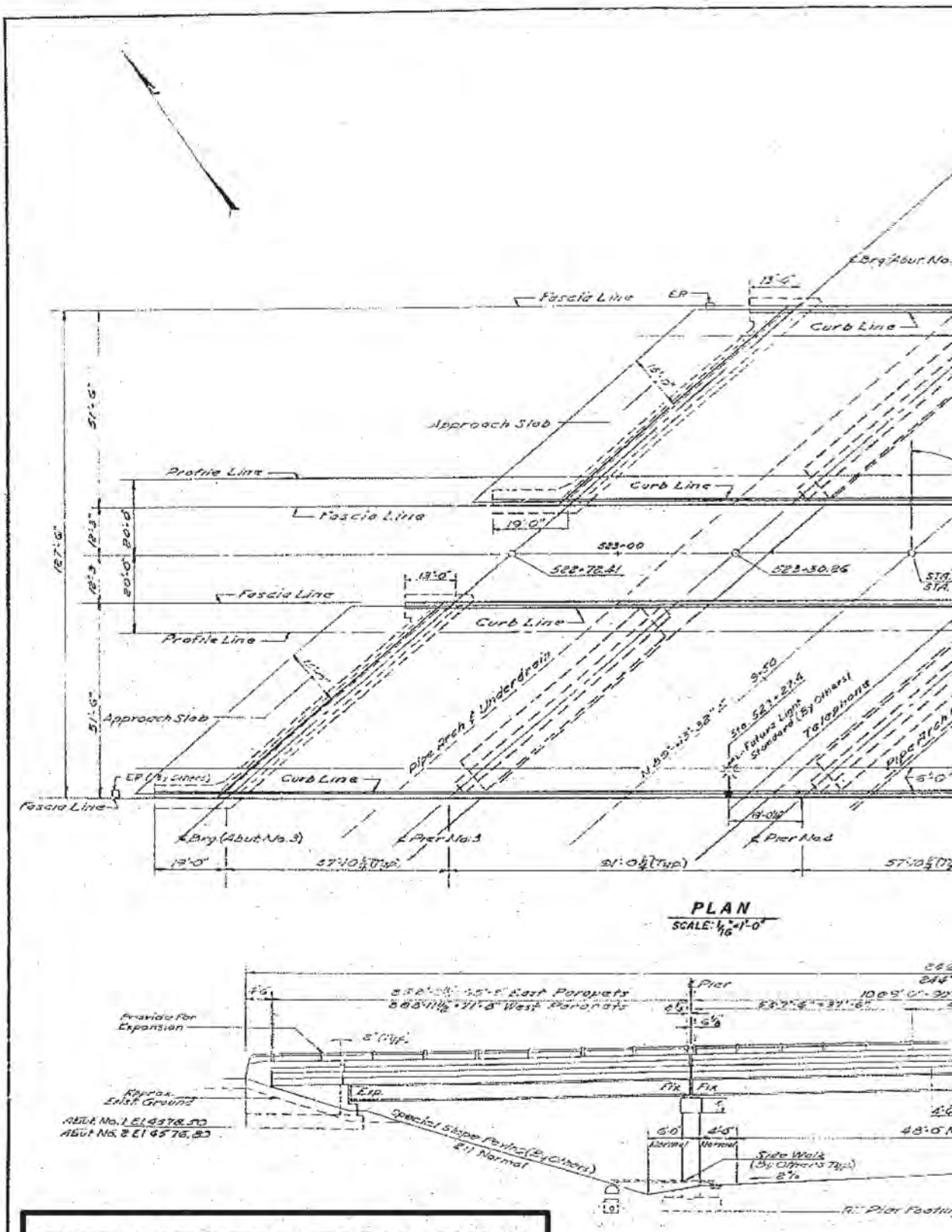


FOR INFORMATION ONLY

| FED. ROAD DIST. NO. | STATE | FED. AID PROJ. NO. | FISCAL YEAR | SHEET NO. | TOTAL SHEETS |
|---|---|---|---|---|---|
| 07 | UTAH | I-15-6(31)265 | [redacted] | | |

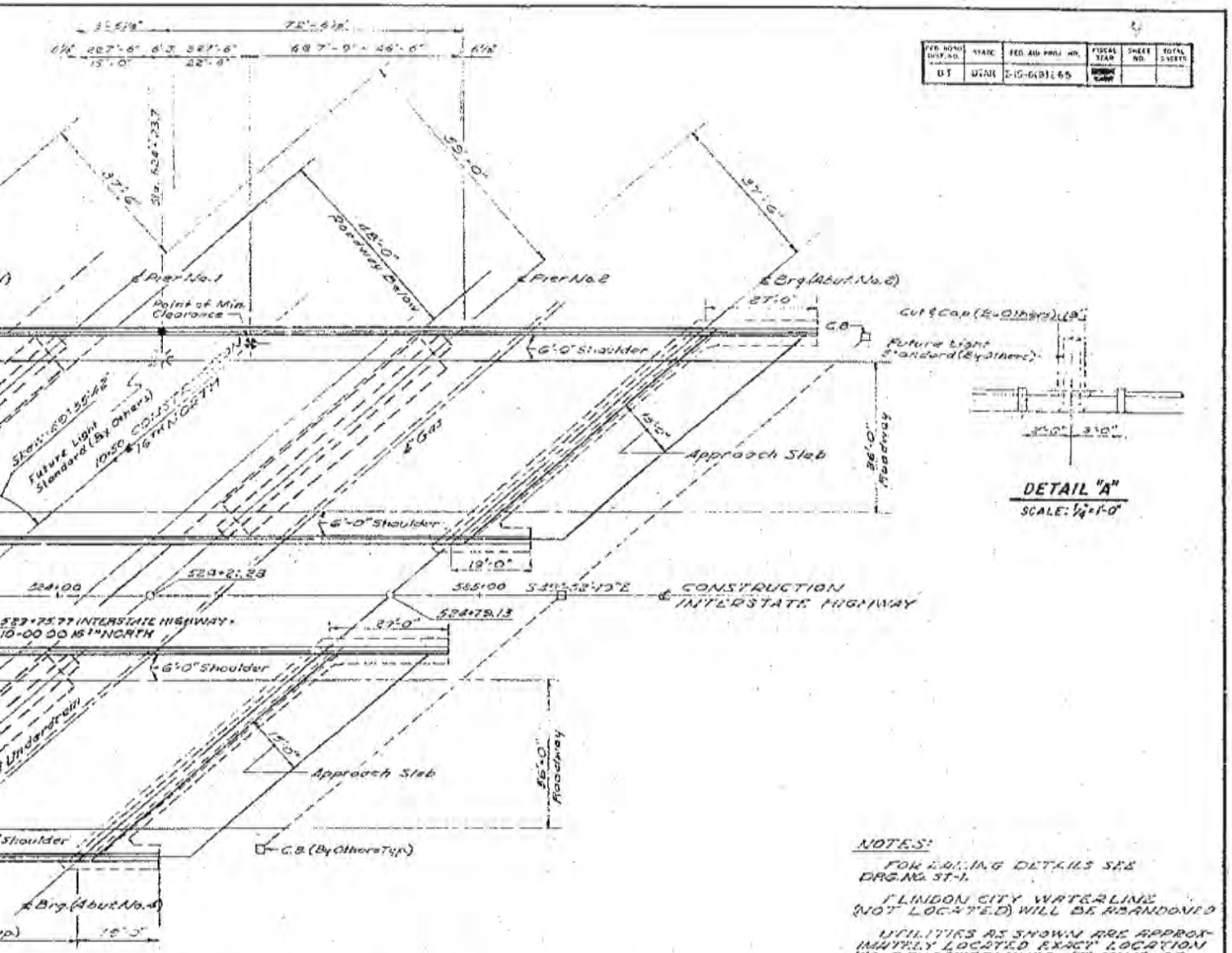


NOTES:

FOR RAILING DETAILS SEE DRG. No. ST-1.

LINDON CITY WATERLINE (NOT LOCATED) WILL BE ABANDONED

UTILITIES AS SHOWN ARE APPROXIMATELY LOCATED EXACT LOCATION TO BE DETERMINED AT TIME OF CONSTRUCTION BY THE CONTRACTOR

FOR JOINT FILLER DETAILS AT PARAPETS SEE SHEET 13 OF 16 SHEETS.

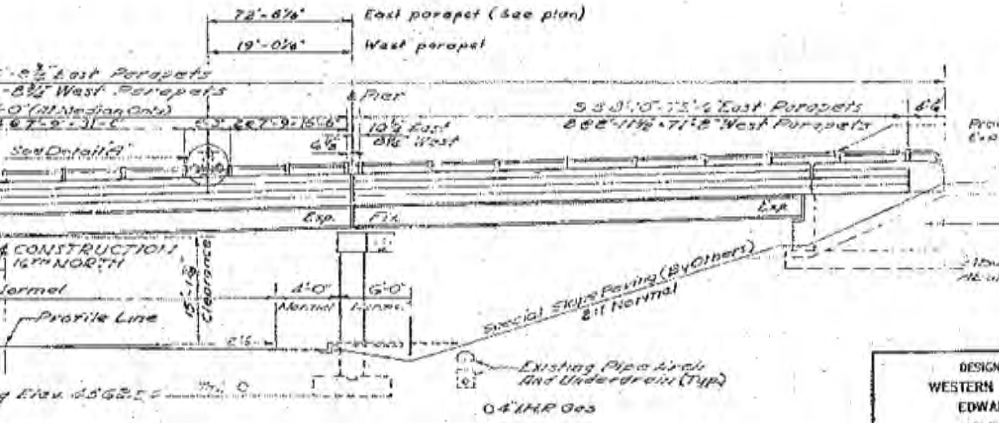


DECK PLAN & ELEVATION

REGISTERED PROFESSIONAL ENGINEER No. 2164 L. R. NEWVILLE STATE OF UTAH

SHEET 5 OF 16 SHEETS

UTAH STATE ROAD COMMISSION
SALT LAKE CITY, UTAH
BRIDGE DEPARTMENT

OREM 1600 NORTH INTERCHANGE

214'-5 3/8" O. TO O. 140° XING ℄
STA. 523+75.77 I-15-6 (9) 265
LEHI-PROVO UTAH COUNTY

DESIGNED BY P.T.C.
DRAWN BY T.Q.
TRACED BY
CHECKED BY R.W.

SCALE AS NOTED
ISSUED June 15, 1960
APPROVED D. L. Spangler
CHIEF BRIDGE ENGINEER

DESIGN AND DRAWING BY
WESTERN ENGINEERS, INC. AND
EDWARDS AND KELCEY
CONSULTING ENGINEERS

SUBMITTED BY L. R. Newville CHIEF ENGINEER
UTAH ENGR. LIC. NO. 2164

DWG. No. C-353

STRUCTURE 7-F

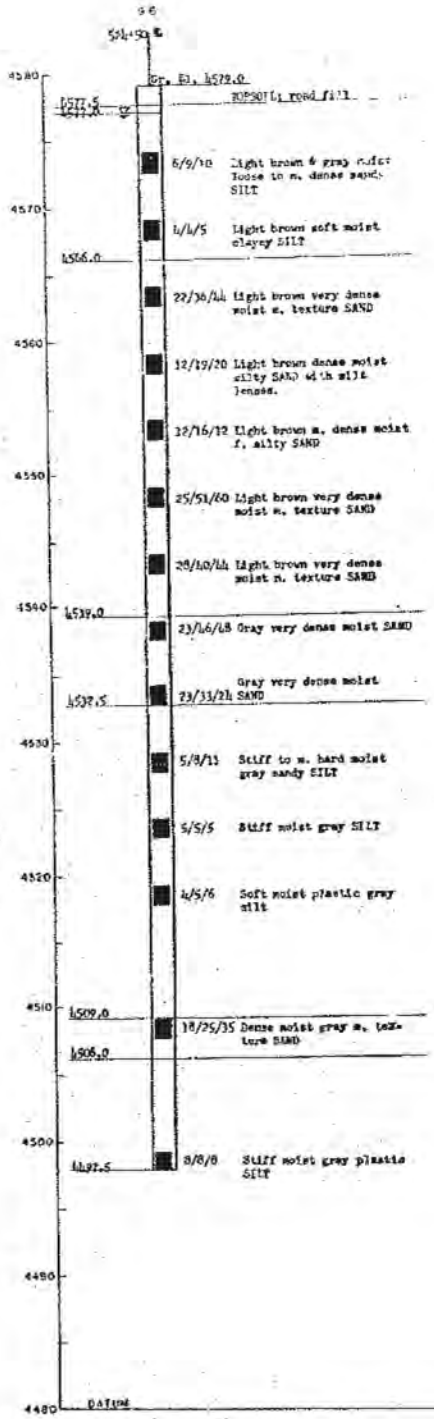


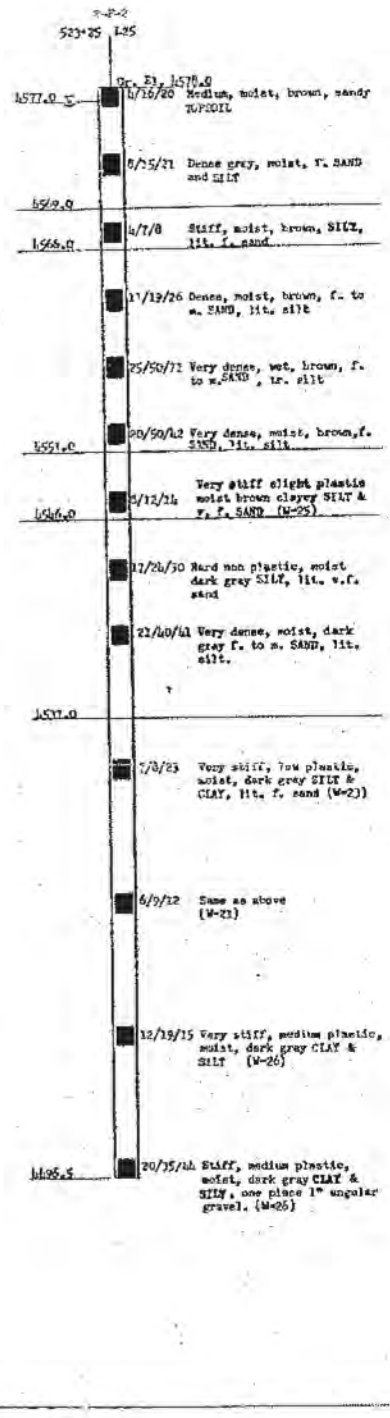

**FOR INFORMATION ONLY**

DGN Files IPL PWPdms\16721\4433.0353-03.forsnfoxcon
02-MAY-2005

| FED. ROAD DIST. NO. | STATE | FED. AID PROJ. NO. | FISCAL YEAR | SHEET NO. | TOTAL SHEETS |
|---|---|---|---|---|---|
| UT | UTAH | I-15-6(91)265 | [illegible] | | |

5

4525.0
Loose moist brown TOPSOIL

/21 Dense wet fine brown SAND

/21 Very stiff wet medium plastic CLAY & SILT (LL-43 PL-30)

/17 Dense wet fine brown SAND little silt

0/34 Dense moist 1/4" layers varved fine brown SAND with 1/8" layers of m. plastic CLAY & SILT

1/16 Dense wet fine brown SAND some silt

/16 Medium wet fine brown SAND some silt trace clay

8/41 Dense wet fine gray SAND & SILT lit. clay

7/36 Very dense moist fine gray SAND & SILT

0/110 Very dense wet medium to fine gray SAND

/15 Very stiff moist low plastic gray SILT & CLAY (W=21)

21/86 Very dense moist fine gray SAND trace silt

19 Medium wet low plastic gray SILT & CLAY (W=25)

0/35 Medium wet low plastic gray Silt & CLAY and fine SAND (W=25 Artesian flow @ 90')

MATCH LINE

## LEGEND

Boring No. — 1-A-1

Interstate Station — 22+63 — R72 — Offset

Ground Elevation — Gr. El. 4562

Ground Water Table Elevation 4557.1 ▽

Number of Blows Used to drive casing 12 inches with 300 lb. hammer falling 7 ft. (Typical)

Strata Change Elevation (Typical) — 4550

Boring Advanced Without Casing

Location of Sample (Typical) — 4539

Bottom of Boring Elevation — 4535.5

| Elevation | Blows | Description |
|---|---|---|
| 4560 | 3, 7, 9 | 2/4/5 Stiff m. plastic brown clay some silt-TOPSOIL |
| | 12, 17, 16 | 11/13/17 M. dense wet tan m. to c. SAND, some silt, tr. f. gravel |
| | 17, 22, 33, 46 | |
| | 35, 43, 86, 92, 106 | 15/21/30 Dense wet tan m. to c. SAND, some gravel |
| | | 7/5/8 Stiff, low plastic brown CLAY & SILT, tr. f. sand (LL = 40, PL = 26, W = 32) |
| | | 11/10/12 Very stiff, plastic gray CLAY & SILT, tr. f. sand (W = 35, qu = 17/ft) |
| | | 9/12/20 Very stiff varved plastic gray silty CLAY & f. silty SAND |

Number of Blows Used to drive 1-3/8" I.D. sampler with 140 lb. hammer falling 30 inches — 1st. 6 inches, 2nd. 6 inches, 3rd. 6 inches

Visual soil description for each sample and results of classification tests, if any (Typical)

ABBREVIATIONS IF AND WHEN USED:

br. = brown
gr. = gray
org. = organic
f. = fine
v. f. = very fine
m. = medium
c. = coarse
sm. = some
tr. = trace
lit. = little
LL = Liquid Limit in %
PL = Plastic Limit in %
W = Natural Moisture Content in %
qu = Unconfined compression test from pocket penetrometer in T/ft.

2-B-1

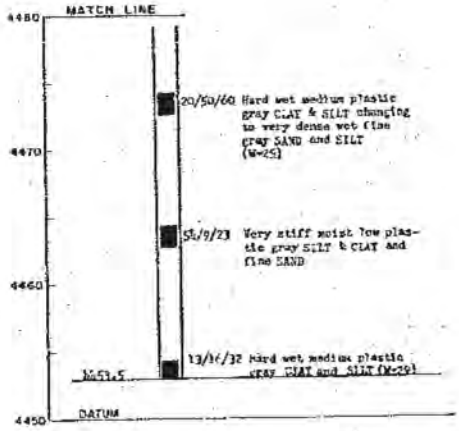


## BORING LOGS

SHEET 3 OF 16 SHEETS

UTAH STATE ROAD COMMISSION
SALT LAKE CITY, UTAH
BRIDGE DEPARTMENT

OREM 1600 NORTH INTERCHANGE
214'-5 3/8" O.T.O. 140° XING ℄
STA. 523+75.77 I-15-6 (91)265
LEHI-PROVO UTAH COUNTY

DESIGNED BY E.F.K.
DRAWN BY E.F.K.
TRACED BY E.F.K.
CHECKED BY E.F.K.
SCALE AS NOTED
DATE Jan. 28, 1964
APPROVED R. L. Sargent
CHIEF BRIDGE ENGINEER

DR. NO.
DWG. NO. C-353

STRUCTURE 2-F

DESIGN AND DRAWING BY
WESTERN ENGINEERS, INC. AND
EDWARDS AND KELCEY
CONSULTING ENGINEERS

SUBMITTED BY J. R. Newville CHIEF ENGINEER
UTAH ENGR. LIC. NO. 2164

REGISTERED PROFESSIONAL ENGINEER NO. 2164 J. R. NEWVILLE STATE OF UTAH

4th Contr

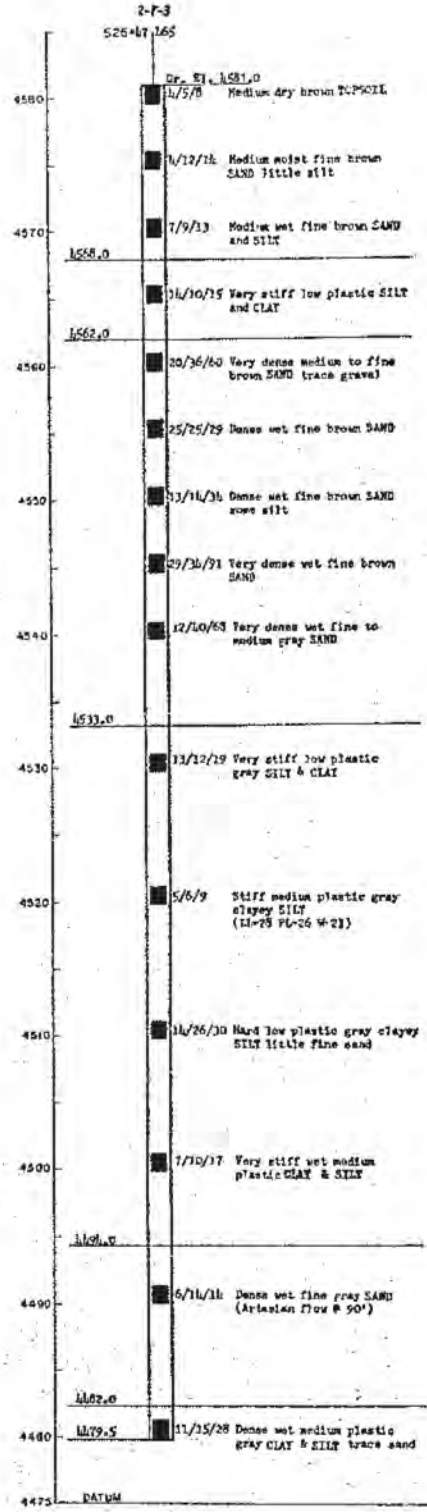


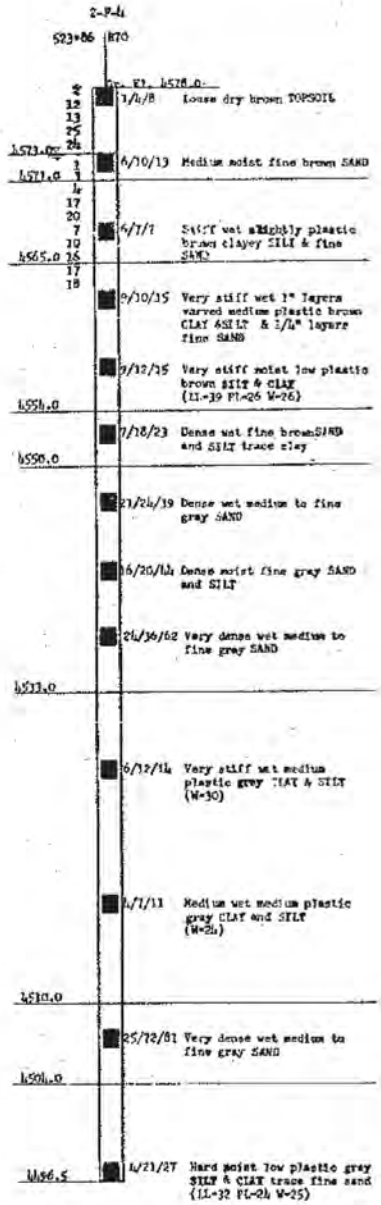


FOR INFORMATION ONLY

DGN Files 1P PWPrimal16721\4433.C353-04.Feasinfo.dgn
02-MAY-2005

| FED. ROAD DIST. NO. | STATE | FED. AID PROJ. NO. | FISCAL YEAR | SHEET NO. | TOTAL SHEETS |
|---|---|---|---|---|---|
| UT | UTAH | I-15-6(9)295 | | 6 | |

## LEGEND

Boring No. — I-4-1

Interstate Station — 22+63 | R72 — 2feet

Ground Elevation — Gr. El. 4562

Ground Water Table Elevation — 4557.1

Number of Blows Used to drive casing 12 inches with 300 lb. hammer falling 2 ft. (Typical)

Strata Change Elevation (Typical) — 4550

Boring Advanced Without Casing

Location of Sample (Typical) — 4539

Bottom of Boring Elevation — 4535.5

| Elevation | Blows | Description |
|---|---|---|
| | 3, 7, 9 | 2/4/5 — Stiff m. plastic brown clay some silt-70%30% L. |
| 4560 | | |
| | 12, 17, 10, 17, 22, 33, 40 | 12/13/17 — M. dense wet tan m. to c. SAND, some silt, tr. f. gravel |
| | 36, 43, 86, 92, 106 | 15/21/30 — Dense wet tan m. to c. SAND, some gravel |
| 4550 | | |
| | 1, 1, 1 | 7/6/8 — Stiff, low plastic brown CLAY & SILT, tr. f. sand (LL = 40, PL = 28, W = 32) |
| | | 11/10/12 — Very stiff, plastic gray CLAY & SILT, tr. f. sand (W = 35, qu = 17/ft ) |
| 4539 | | |
| 4535.5 | | 9/12/20 — Very stiff varved plastic gray silty CLAY & f. silty SAND |

Number of Blows Used to drive 1-3/8" I.D. sampler with 140 lb. hammer falling 30 inches — 1st. 6 inches, 2nd. 6 inches, 3rd. 6 inches

visual soil description for each sample and results of classification tests, if any (Typical)

ABBREVIATIONS IF AND WHEN USED:

br. = brown
gr. = gray
org. = organic
f. = fine
v. f. = very fine
m. = medium
c. = coarse
sm. = some
tr. = trace
lit. = little
LL = Liquid Limit in %
PL = Plastic Limit in %
W = Natural Moisture Content in %
qu = Unconfined compression test from pocket penetrometer in T/ft²

## BORING LOGS

SHEET 4 OF 16 SHEETS

UTAH STATE ROAD COMMISSION
SALT LAKE CITY, UTAH
BRIDGE DEPARTMENT

OREM 1600 NORTH INTERCHANGE

214'-5⅜" O.T.O.O. 140° XING ∠
STA. 523+75.77 I-15-6 (9)295
LEHI-PROVO UTAH COUNTY

DESIGNED BY EFK SCALE AS NOTED
DRAWN BY EFK ISSUED June 28, 1960
TRACED BY EFK APPROVED D.L. Sargent
CHECKED BY EFK CHIEF BRIDGE ENGINEER

No. Dwg. No. C-353

DESIGN AND DRAWING BY
WESTERN ENGINEERS, INC. AND
EDWARDS AND KELCEY
CONSULTING ENGINEERS

SUBMITTED BY CHIEF ENGINEER
UTAH ENGR. LIC. NO. 2164

REGISTERED PROFESSIONAL ENGINEER NO. 2164 J. R. NEDVILLE STATE OF UTAH

STRUCTURE 2-F

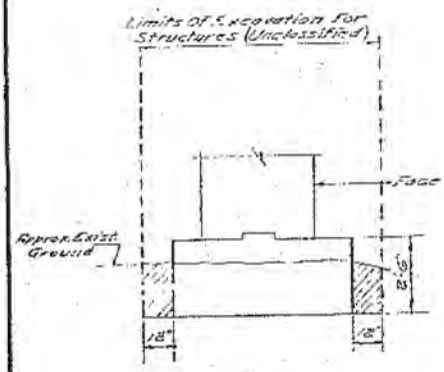


SECTION A-A
SCALE: 3/8" = 1'-0"

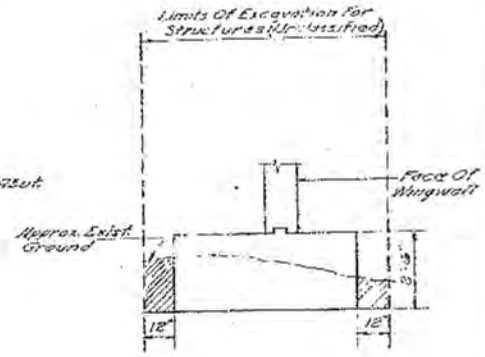


SECTION C-C
SCALE: 3/8" = 1'-0"

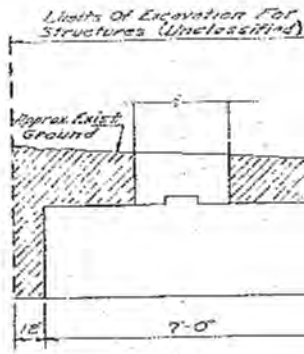


SECTION B-B
SCALE: 3/8" = 1'-0"

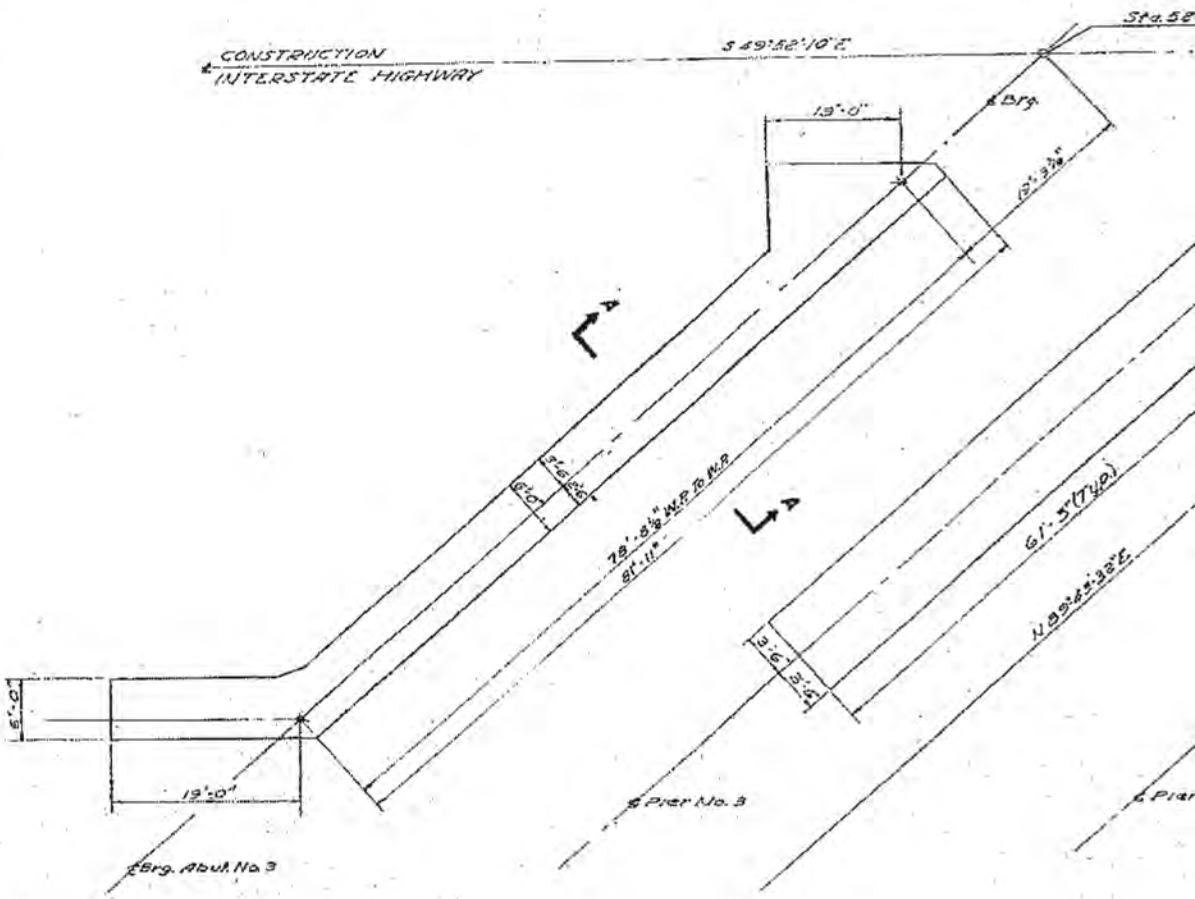


PLAN
SCALE: 1/8" = 1'-0"

| FED. ROAD DIST. NO. | STATE | FED. AID PROJ. NO. | FISCAL YEAR | SHEET NO. | TOTAL SHEETS |
|---|---|---|---|---|---|
| 8 | UTAH | I-15-6(91)265 | [redacted] | | |

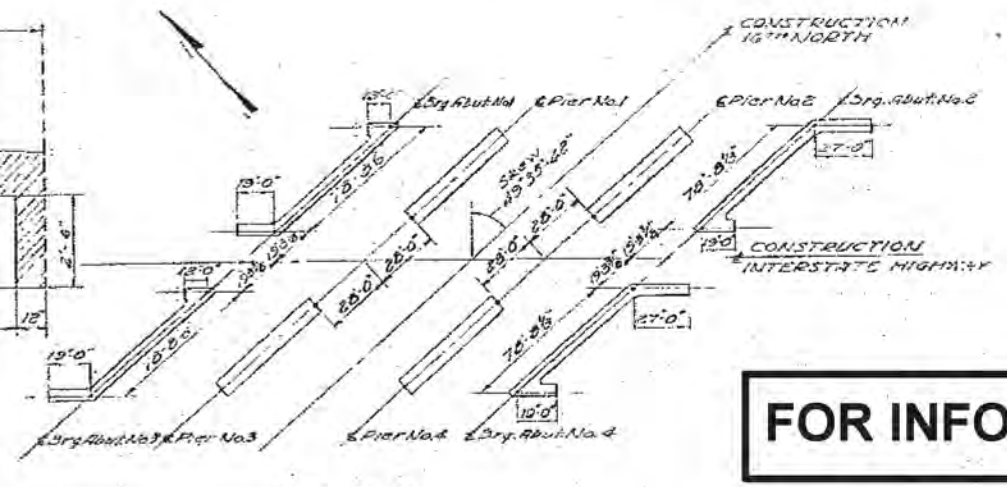


**FOR INFORMATION ONLY**

## KEY PLAN

SCALE: 1" = 40'

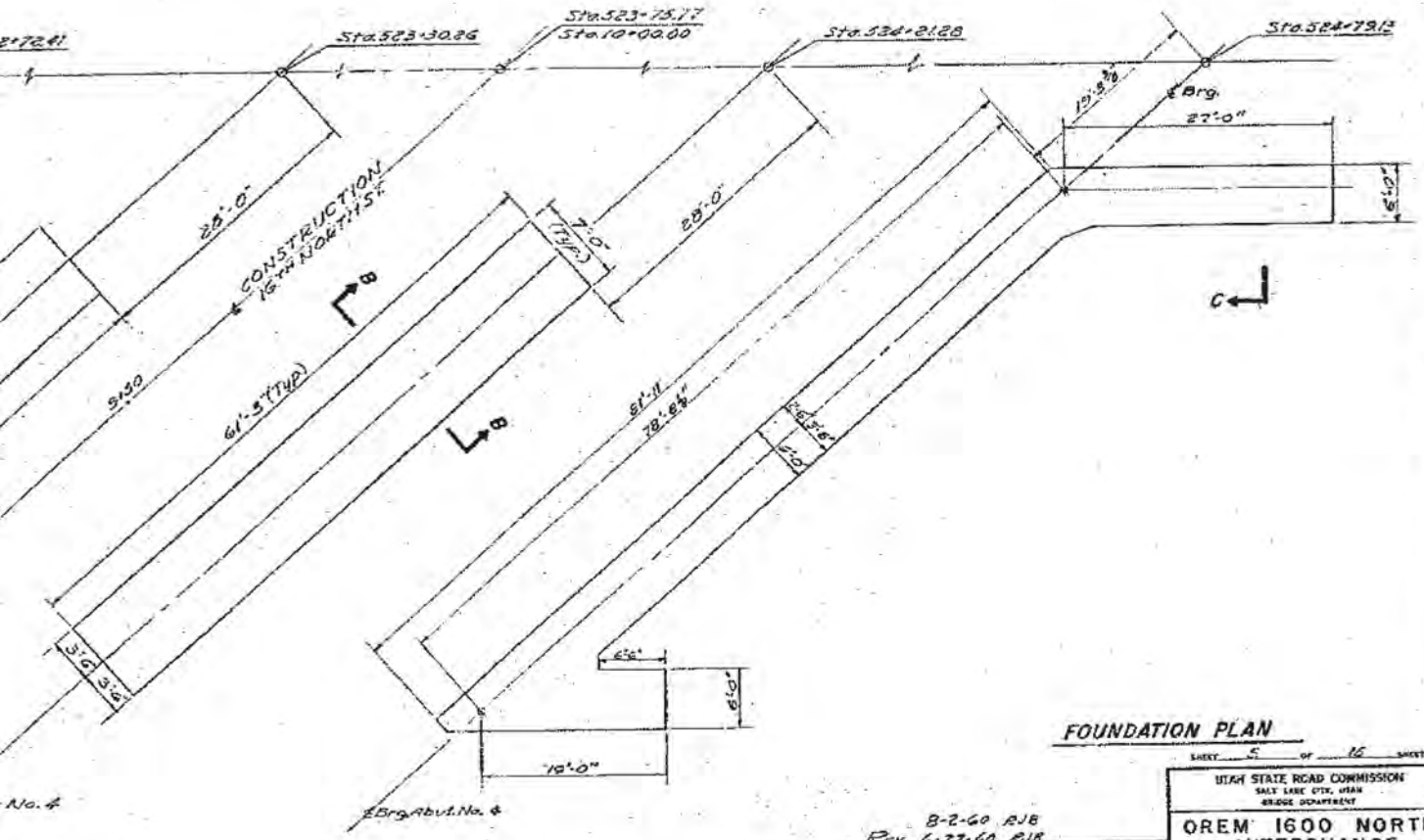


## FOUNDATION PLAN

SHEET 5 OF 16 SHEETS

8-2-60 RJB
REV. 6-27-60 RJB

DESIGN AND DRAWING BY
WESTERN ENGINEERS, INC. AND
EDWARDS AND KELCEY
CONSULTING ENGINEERS

SUBMITTED BY J. R. Newville CHIEF ENGINEER
UTAH ENGR. LIC. NO. 2164

REGISTERED PROFESSIONAL ENGINEER NO. 2164 J. R. NEWVILLE STATE OF UTAH

UTAH STATE ROAD COMMISSION
SALT LAKE CITY, UTAH
BRIDGE DEPARTMENT

OREM 1600 NORTH INTERCHANGE
214'-5 3/8" O. TO O. 140° XING ℄
STA. 523+75.77 I-15-6 (91)265
LEHI-PROVO UTAH COUNTY

DESIGNED BY PTC SCALE AS NOTED
DRAWN BY T.Q. ISSUED June 20, 1960
TRACED BY APPROVED BY Sang
CHECKED BY RC. CHIEF BRIDGE ENGINEER

NO. DWG. NO. C-353

STRUCTURE 2-F

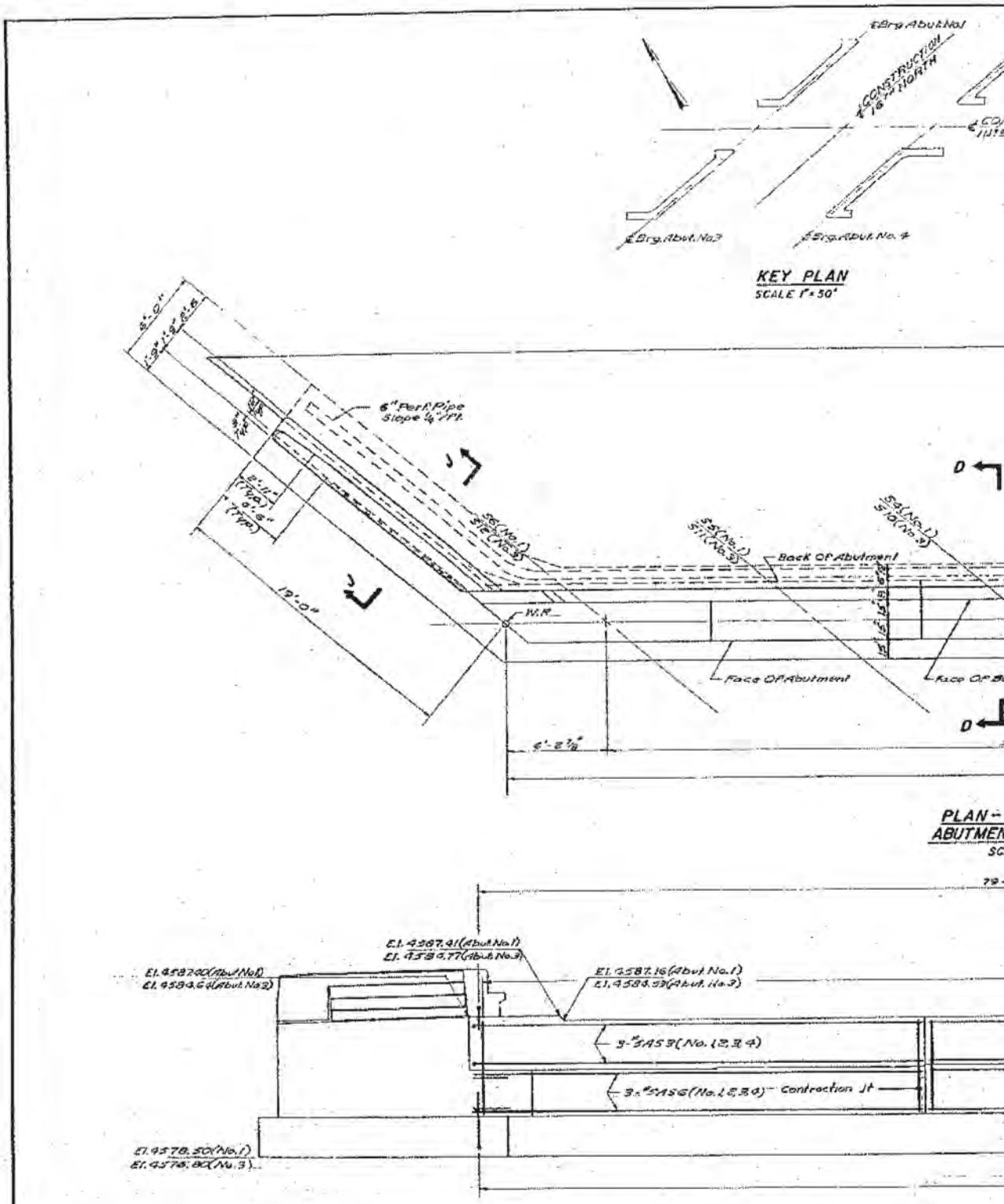


**FOR INFORMATION ONLY**

8

| FED. ROAD DIST. NO. | STATE | FED. AID PROJ. NO. | FISCAL YEAR | SHEET NO. | TOTAL SHEETS |
|---|---|---|---|---|---|
| 07 | UTAH | I-15-6(19)265 | [redacted] | | |

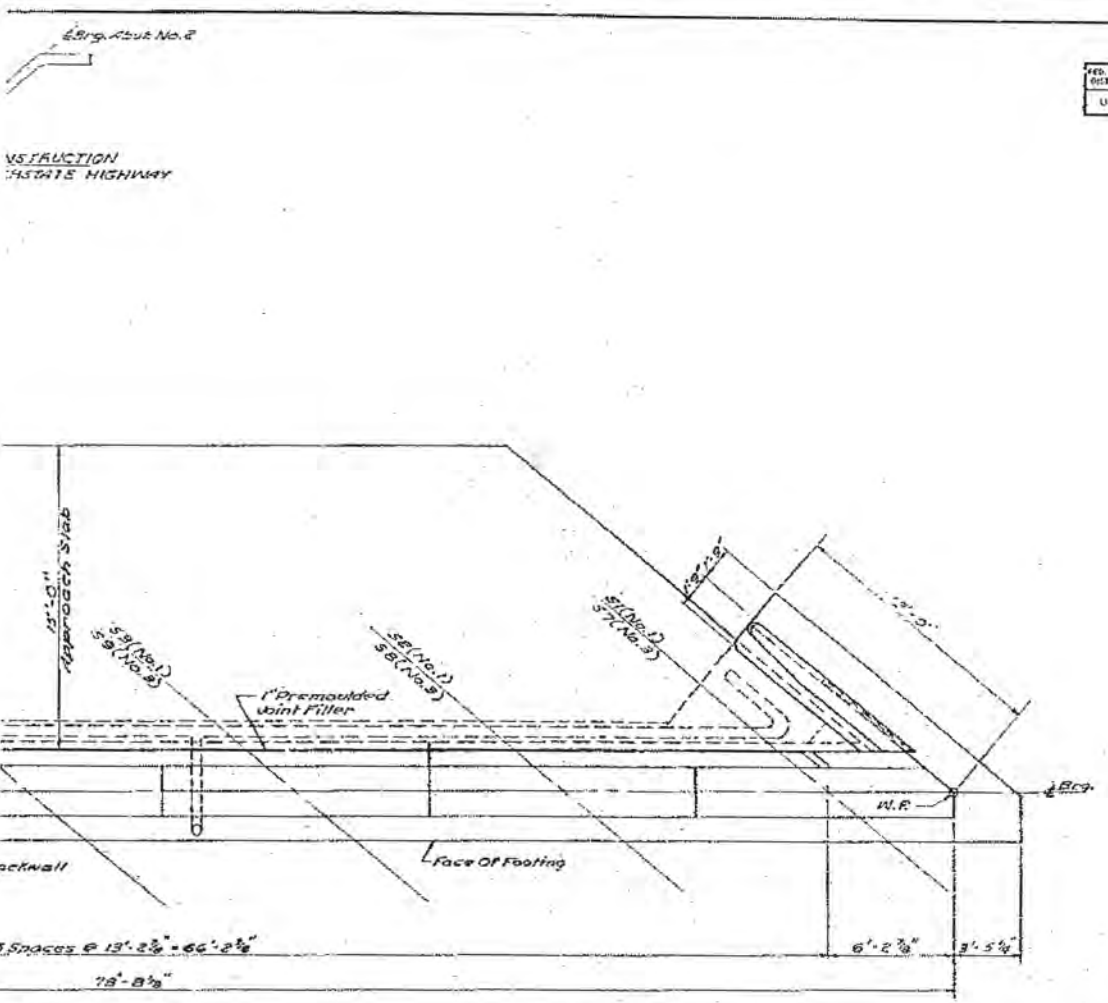


## ABUTMENT NO.1
## T NO.3 - SIMILAR
ALE 1/4" = 1'-0"

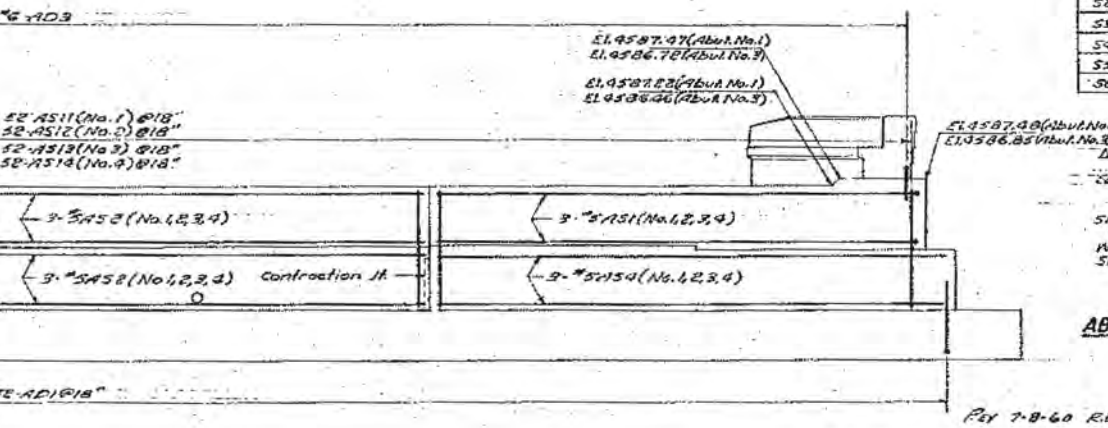


| STA. NO. | SEAT ELEVATION ABUT. NO.1 | STA. NO. | SEAT ELEVATION ABUT. NO.3 |
|---|---|---|---|
| S1 | 4584.22 | S7 | 4583.42 |
| S2 | 4584.43 | S8 | 4583.27 |
| S3 | 4584.62 | S9 | 4582.90 |
| S4 | 4584.91 | S10 | 4586.23 |
| S5 | 4584.39 | S11 | 4582.16 |
| S6 | 4584.15 | S12 | 4581.36 |

NOTES:
FOR FOOTING LOCATION PLAN SEE SHEET 5 OF 16 SHEETS.

FOR SECTIONS NOT SHOWN SEE SHEET 8 & 9 OF 16 SHEETS.
FOR ELEVATIONS OF THE WINGWALLS SEE SHEET 9 OF 16 SHEETS.

## ABUTMENTS NO.1 & NO.3

Per 7-8-60 R.B.J.

## BACKFACE - ABUTMENTS NO. 1,2,3 & 4
## ELEVATION
SCALE 1/4" = 1'-0"

REGISTERED PROFESSIONAL ENGINEER
NO. 2164
R. R. BENNETT
STATE OF UTAH

DESIGN AND DRAWING BY
WESTERN ENGINEERS, INC. AND
EDWARDS AND KELCEY
CONSULTING ENGINEERS

SUBMITTED BY [signature] CHIEF ENGINEER
UTAH ENGR. LIC. NO.

SHEET 6 OF 16 SHEETS

UTAH STATE ROAD COMMISSION
SALT LAKE CITY, UTAH
BRIDGE DEPARTMENT

OREM 1600 NORTH INTERCHANGE
214'-5 3/8" O. TO O. 140° XING ∠
STA. 523 + 75.77 I-15-6 (19)265
LEHI - PROVO UTAH COUNTY

DESIGNED BY R.T.C. SCALE AS NOTED
DRAWN BY T.E.M. TRACED JUNE 28, 1960
TRACED BY APPROVED D.L. Sargent
CHECKED BY A.K. CHIEF BRIDGE ENGINEER

No. C-353

STRUCTURE 2-F

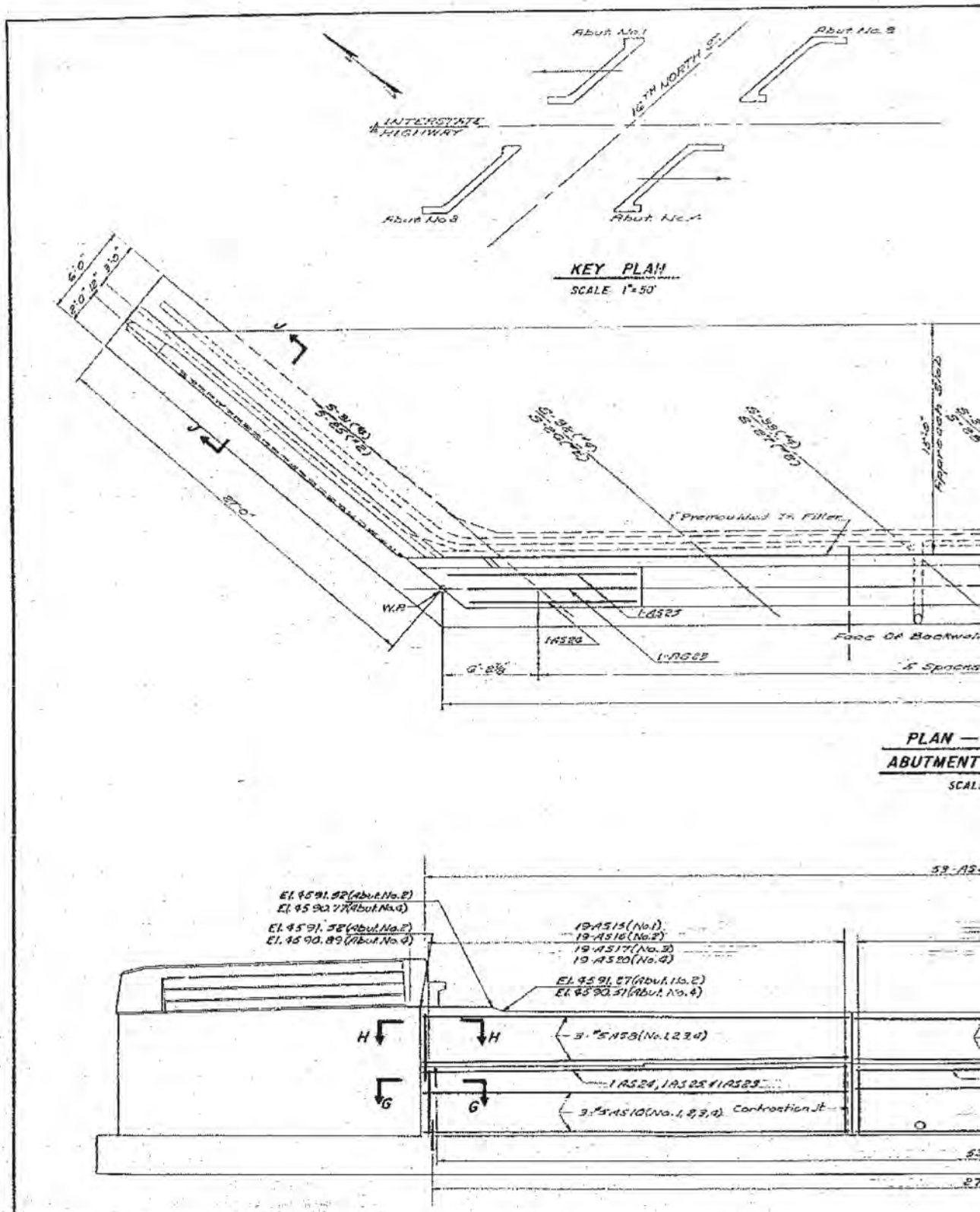


**FOR INFORMATION ONLY**

REINFORCEMENT FRONTFACE — ABUTMENTS
ELEVATION
SCALE 1/4"=1'-0"

| FED. ROAD DIST. NO. | STATE | FED. AID PROJ. NO. | FISCAL YEAR | SHEET NO. | TOTAL SHEETS |
|---|---|---|---|---|---|
| UT | UTAH | I-15-6(31)265 | [redacted] | 9 | |

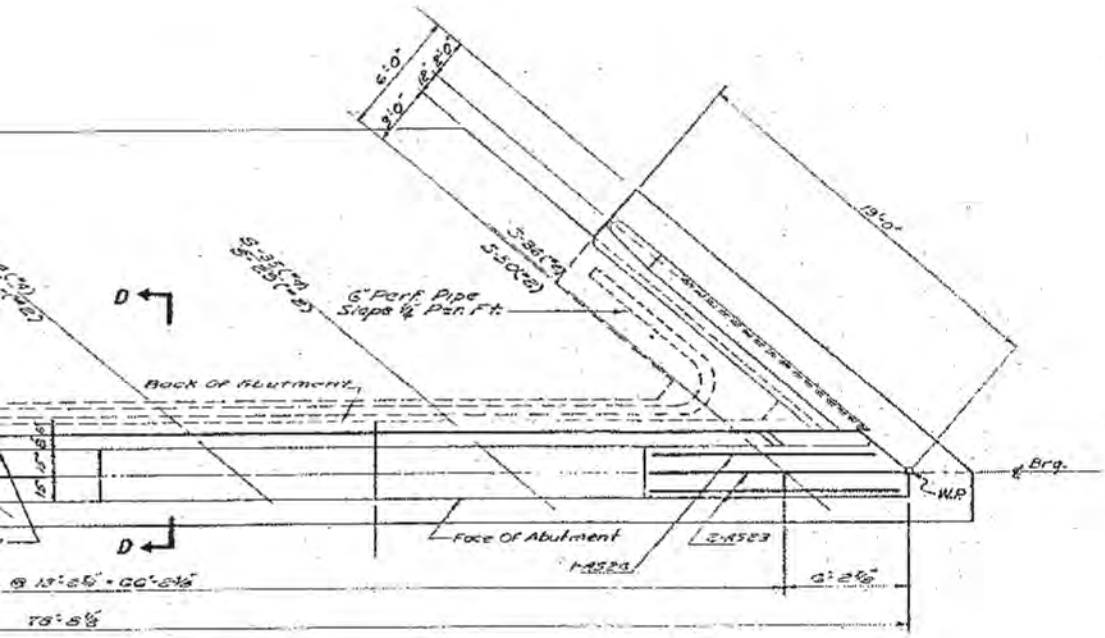


## ABUTMENT NO. 2
## NO. 4 — SIMILAR

SCALE ¼" = 1'-0"

| BEAM NO. | ELEVATION ABUT. NO. 4 | BEAM NO. | ELEVATION ABUT. NO. 2 |
|---|---|---|---|
| S-31 | 4587.34 | S-26 | 4589.16 |
| S-32 | 4587.20 | S-27 | 4589.36 |
| S-33 | 4586.83 | S-28 | 4589.35 |
| S-34 | 4586.96 | S-29 | 4589.39 |
| S-35 | 4586.09 | S-29 | 4588.32 |
| S-36 | 4585.89 | S-30 | 4588.08 |

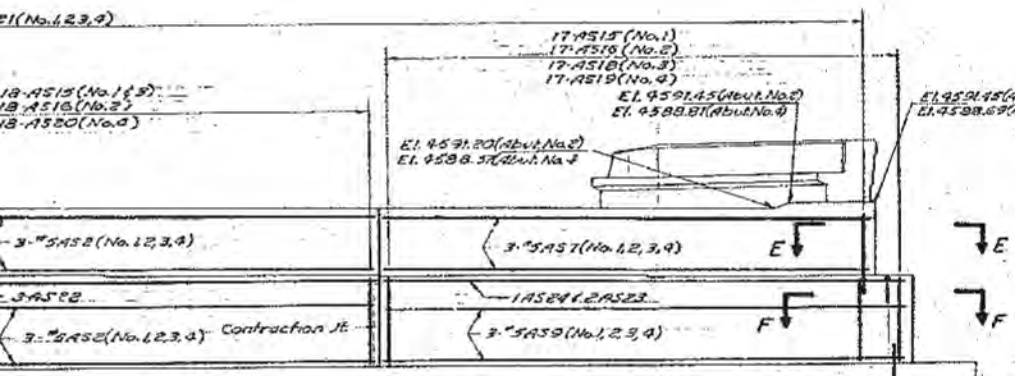


NOTES:
FOR FOOTING LOCATION PLAN SEE SHEET 5 OF 16 SHEETS.
FOR ELEVATIONS OF WINGWALLS SEE 9 OF 16 SHEETS.
FOR SECTIONS NOT SHOWN SEE SHEET 8 & 9 OF 16 SHEETS.

## ABUTMENTS NO. 2 & NO. 4

NO. 1,2,3 & 4

REGISTERED PROFESSIONAL ENGINEER NO. 2164 J. R. NEWVILLE STATE OF UTAH

Per 6-27-69 RJB
Per 6-27-60 RJB

DESIGN AND DRAWING BY
WESTERN ENGINEERS, INC. AND
EDWARDS AND KELCEY
CONSULTING ENGINEERS

SUBMITTED BY [signature] CHIEF ENGINEER
UTAH ENGR. LIC. NO. 2164

SHEET 7 OF 16 SHEETS

UTAH STATE ROAD COMMISSION
SALT LAKE CITY, UTAH
BRIDGE DEPARTMENT

OREM 1600 NORTH INTERCHANGE
214'-5 3/8" OTO O 140° XING L
STA 523+7577 I-15-6 (31)265
LEHI-PROVO UTAH COUNTY

DESIGNED BY P.T.C. SCALE AS NOTED
DRAWN BY R.G. TRACED JUNE 18, 1969
TRACED BY
CHECKED BY K.T.
CHIEF BRIDGE ENGINEER

DWG. No. C-353

STRUCTURE 2-F

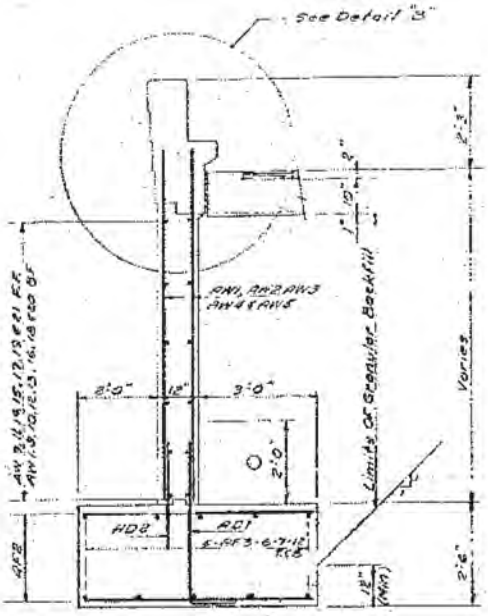


**SECTION J-J**
SCALE: 1/2" = 1'-0"

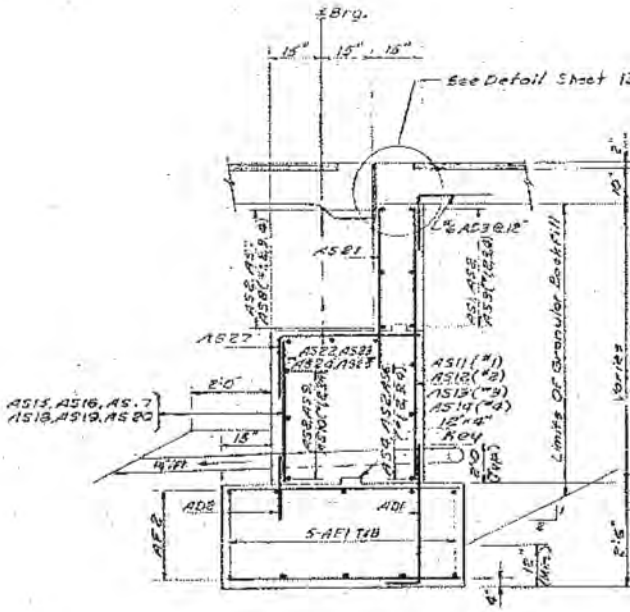


**SECTION D-D**
SCALE: 1/2" = 1'-0"

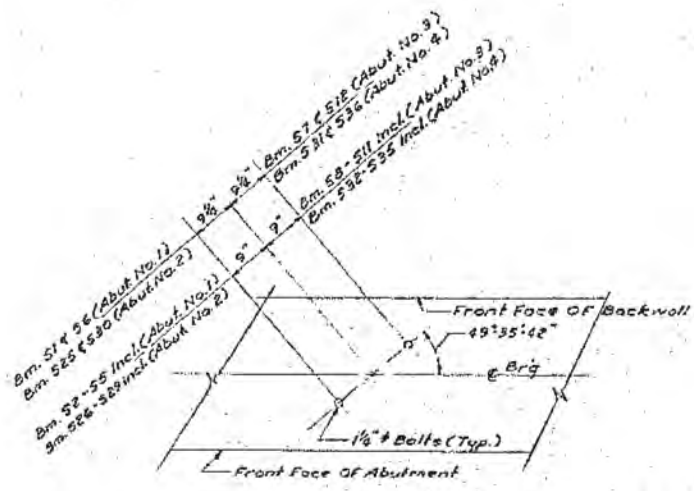


**ANCHOR BOLT LOCATION PLAN**
SCALE: 3/4" = 1'-0"




**DETAIL "B"**
SCALE: 3/4" = 1'-0"

DGN File: 1P_PWPlans\16721\4433_C353-98_Foundation

125-MAY-2005

10

| FED. ROAD DIST. NO. | STATE | FED. AID PROJ. NO. | FISCAL YEAR | SHEET NO. | TOTAL SHEETS |
|---|---|---|---|---|---|
| UT | UTAH | I-15-6(9)265 | [redacted] | | |

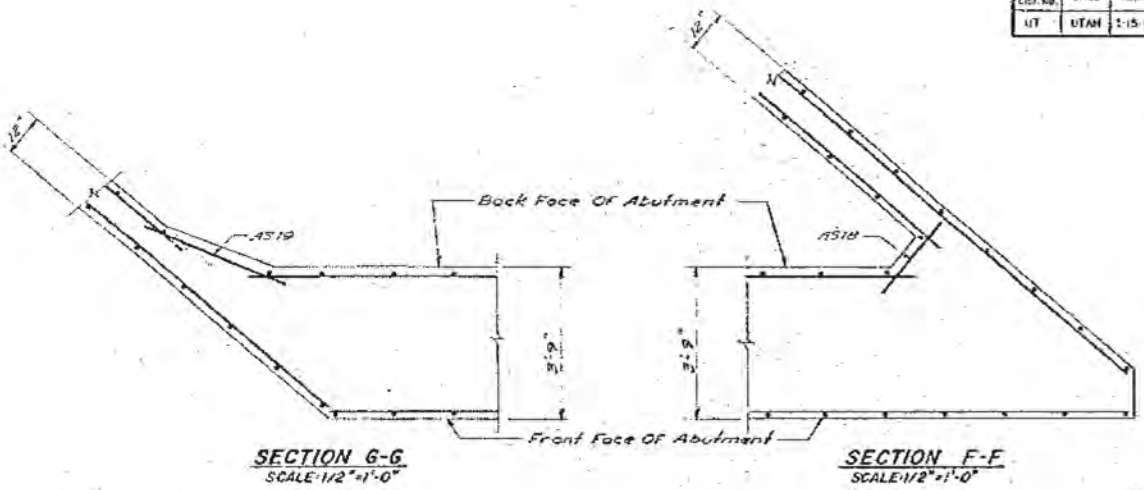


SECTION G-G
SCALE: 1/2" = 1'-0"

SECTION F-F
SCALE: 1/2" = 1'-0"

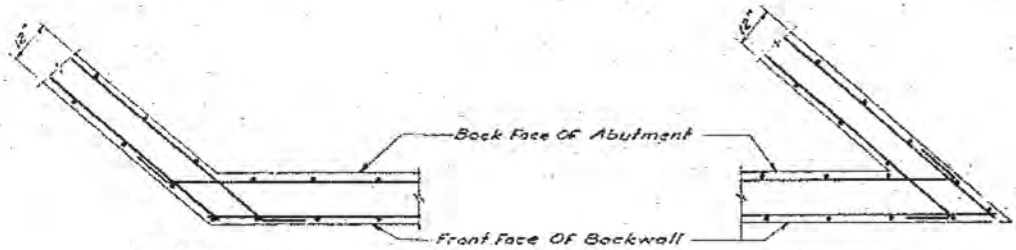


SECTION H-H
SCALE: 1/2" = 1'-0"

SECTION E-E
SCALE: 1/2" = 1'-0"

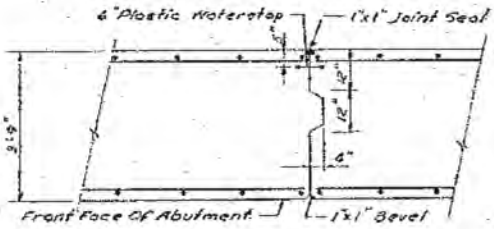


CONTRACTION JOINT DETAIL
SCALE: 1/2" = 1'-0"

**FOR INFORMATION ONLY**

## ABUTMENT DETAILS

SHEET 3 OF 18 SHEETS

UTAH STATE ROAD COMMISSION
SALT LAKE CITY, UTAH
BRIDGE DEPARTMENT

**OREM 1600 NORTH INTERCHANGE**

214'-5 7/8" O.T.O.O. 140° X ING ∠ 4th Contr.
STA 523+75.77 I-15-6(9)265
LEHI-PROVO UTAH COUNTY

DESIGNED BY R.H.C. SCALE AS NOTED
DRAWN BY T.E.M. ISSUED JUNE 28, 1960
TRACED BY K.V. APPROVED D.L. Sargent
CHIEF BRIDGE ENGINEER
CHECKED BY

DWG. NO. C-353

Rev. 6-23-60 RJB

DESIGN AND DRAWING BY
WESTERN ENGINEERS, INC. AND
EDWARDS AND KELCEY
CONSULTING ENGINEERS

SUBMITTED BY J. R. Newville CHIEF ENGINEER
UTAH CIVIL ENG. LIC. NO. 2164

REGISTERED PROFESSIONAL ENGINEER NO. 2164 J. R. NEWVILLE STATE OF UTAH

STRUCTURE 2-F

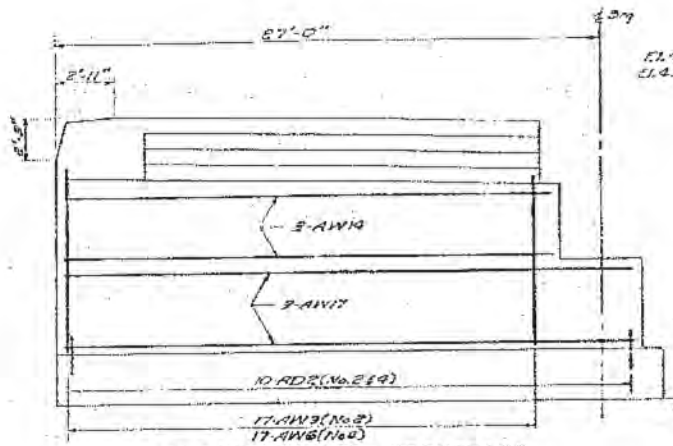


REINFORCEMENT – FRONTFACE

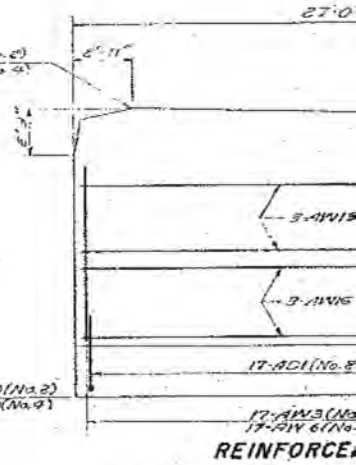


REINFORCE

**SOUTHEAST WINGWALLS NO. 2 & NO. 4**

SCALE: 1/4" = 1'-0"

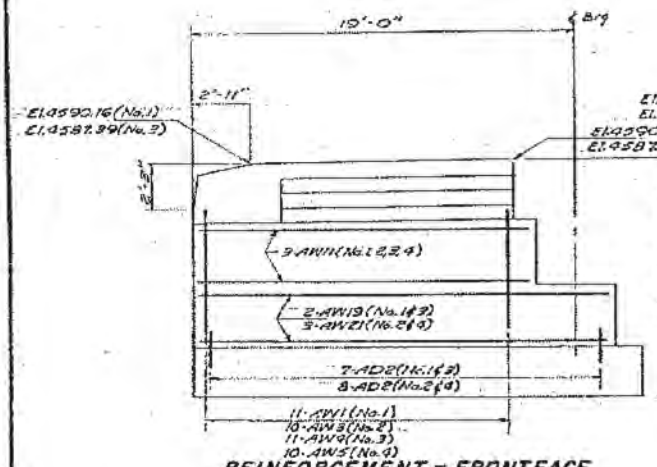


REINFORCEMENT – FRONTFACE

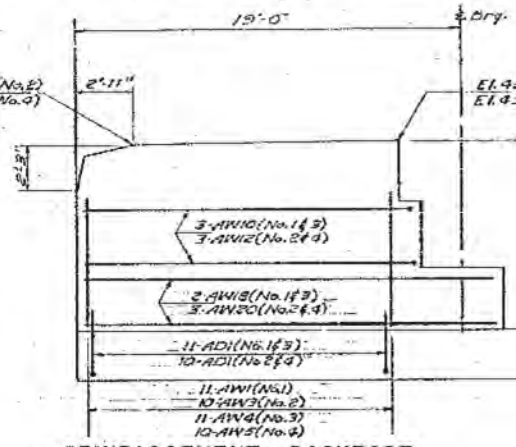


REINFORCEMENT – BACKFACE

**NORTHWEST WINGWALLS NO. 1 & NO. 3**
**SOUTHWEST WINGWALLS NO. 2 & NO. 4**

SCALE: 1/4" = 1'-0"

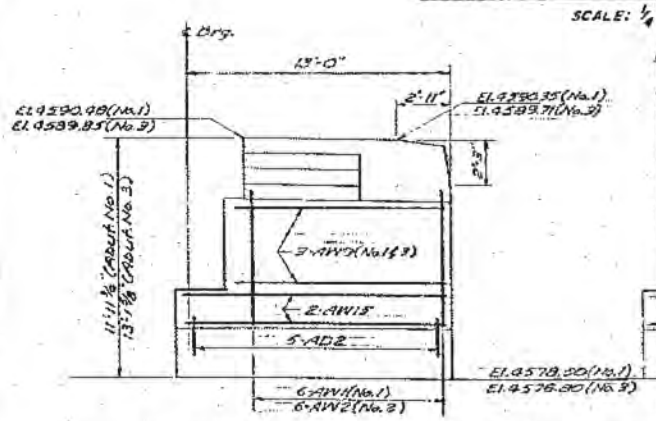


REINFORCEMENT – FRONTFACE

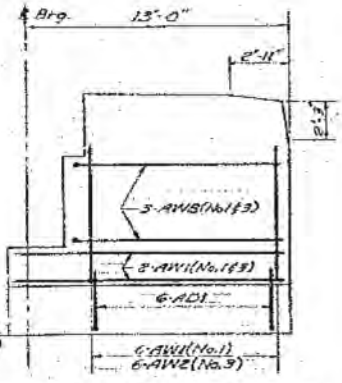


REINFORCEMENT – BACKFACE

**NORTHEAST WINGWALLS NO. 1 & NO. 3**

SCALE: 1/4" = 1'-0"

FOR

DGN Files IP_PWPadres\16721\4433.C253-09-Foreinfoldm
02-MAY-2005

| FED. ROAD DIST. NO. | STATE | FED. AID PROJ. NO. | FISCAL YEAR | SHEET NO. | TOTAL SHEETS |
|---|---|---|---|---|---|
| 8 | UTAH | I-15-6,(9)265 | [redacted] | | |

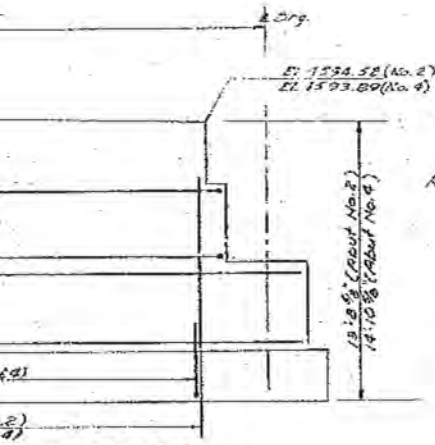


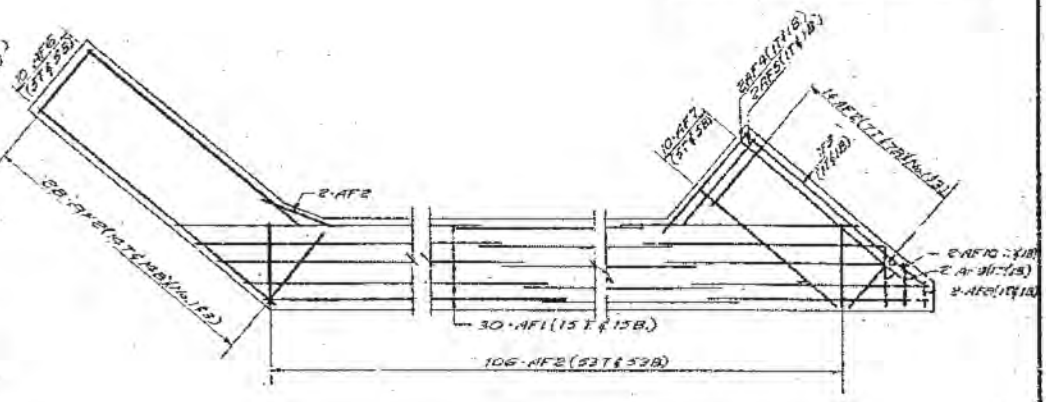


PLAN OF FOOTING
ABUTMENTS NO. 1 & NO. 3
SCALE: 3/16" = 1'-0"

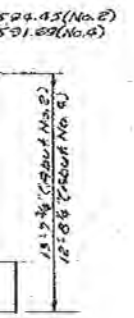


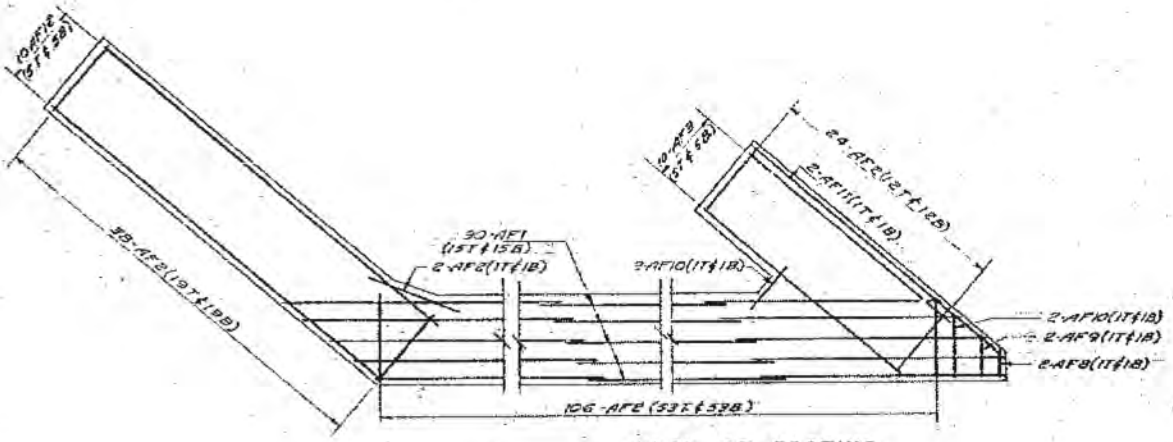


PLAN OF FOOTING
ABUTMENTS NO. 2 & NO. 4
SCALE: 3/16" = 1'-0"

**INFORMATION ONLY**

ABUTMENT DETAILS

SHEET 9 OF 16 SHEETS

UTAH STATE ROAD COMMISSION
SALT LAKE CITY, UTAH
BRIDGE DEPARTMENT

OREM 1600 NORTH INTERCHANGE
214'-5 3/8" O.TO O. 140° XING L
STA. 525 + 73.77 I-15-6 (9)265
LEHI - PROVO UTAH COUNTY

DESIGNED BY P.T.C. SCALE AS NOTED
DRAWN BY I.Q. ISSUED June 28, 1969
TRACED BY O.L. Bergeson
CHECKED BY K.F. CHIEF BRIDGE ENGINEER

No. No. DWG. No. C-353

STRUCTURE 2-F

DESIGN AND DRAWING BY
WESTERN ENGINEERS, INC. AND
EDWARDS AND KELCEY
CONSULTING ENGINEERS

SUPERVISED BY CHIEF ENGINEER
UTAH ENGR. LIC. NO. 2164

REGISTERED PROFESSIONAL ENGINEER NO. 2134 J. R. NEWVILLE STATE OF UTAH

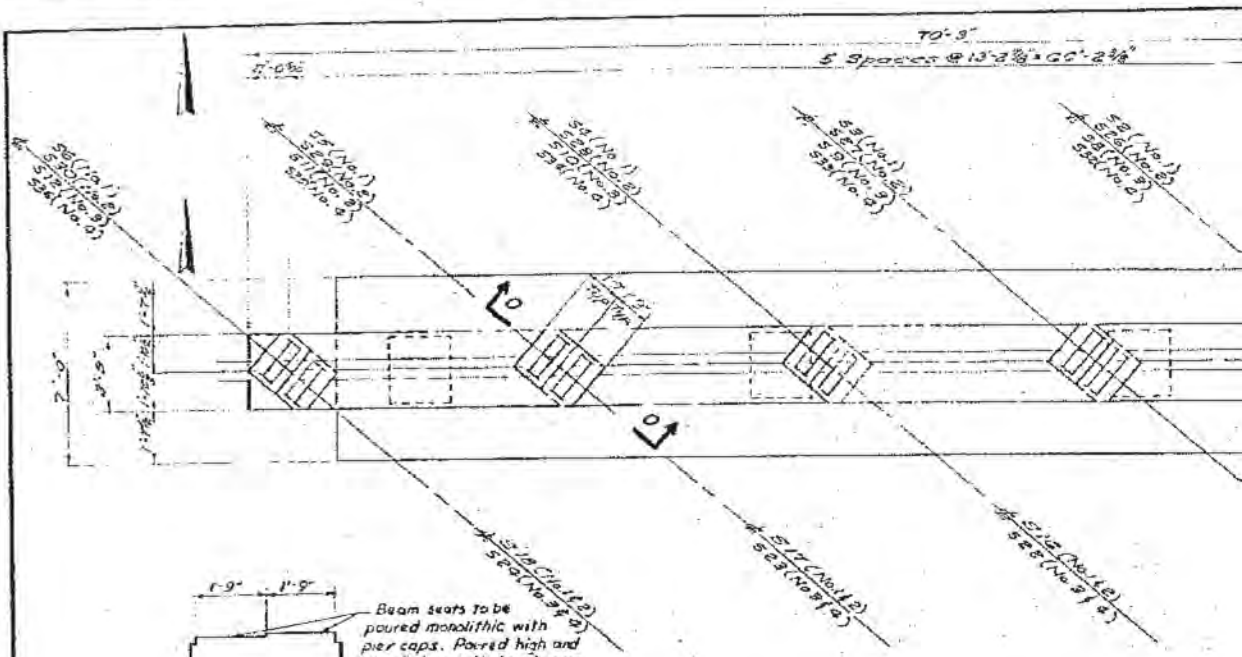


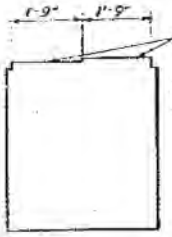


SECTION O-O

PLAN PIER NO. 1 & 3
PIER NO. 2 & 4 SIMILAR - OPPOSITE HAND
SCALE 1/4" = 1'-0"

**FOR INFORMATION ON**

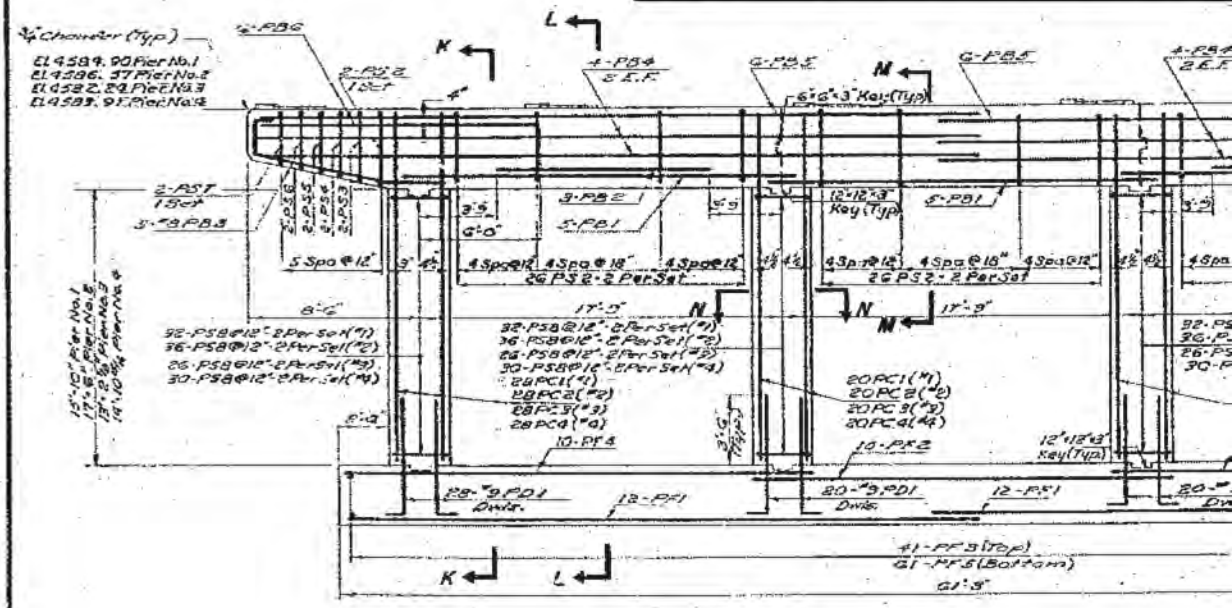


ELEVATION PIER NO. 1 & 3
PIER NO. 2 & 4 SIMILAR - OPPOSITE HAND
SCALE: 1/4" = 1'-0"

DGN Files 3P, PWpdms\16721\4433.03\3-18 Form\Foundation
02-MAY-2005

| FED. ROAD DIST. NO. | STATE | FED. AID PROJ. NO. | FISCAL YEAR | SHEET NO. | TOTAL SHEETS |
|---|---|---|---|---|---|
| U F | UTAH | I 15-6(91)265 | [redacted] | | |

12

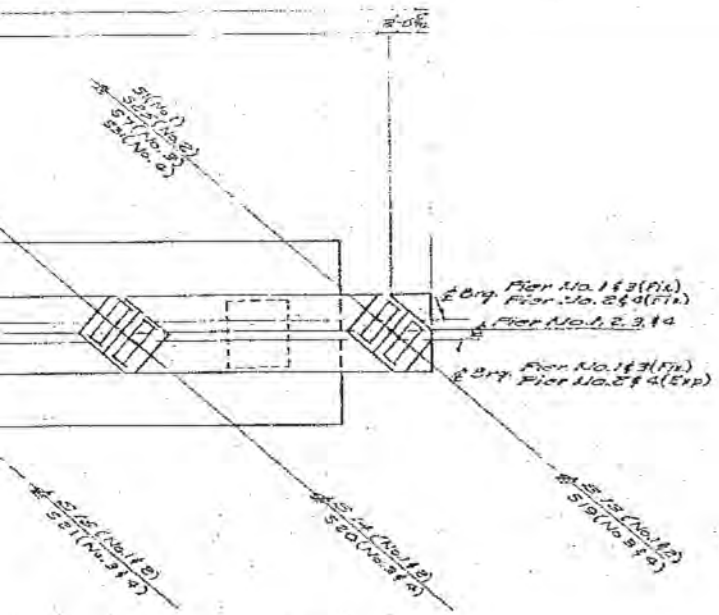


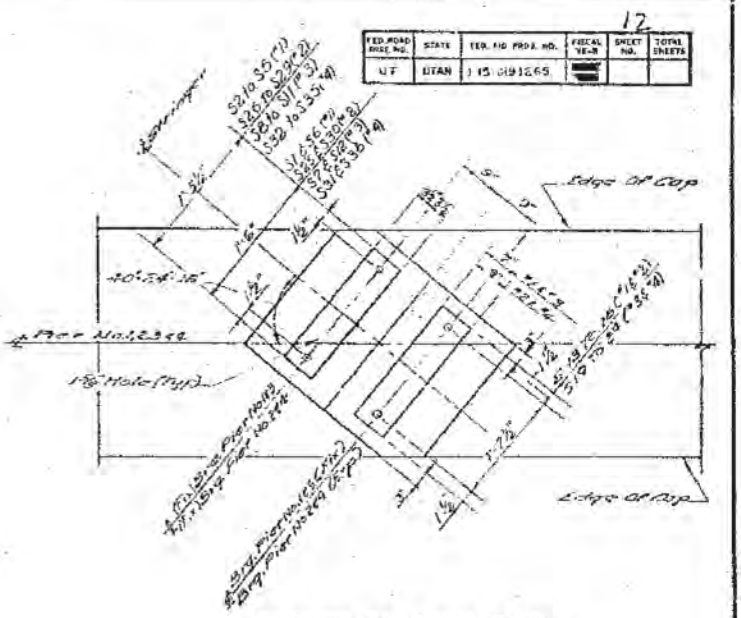


## ANCHOR BOLT LOCATION

SCALE: 3/4" = 1'-0"

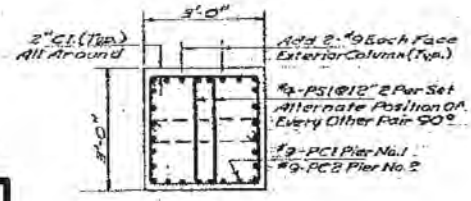


## SECTION N-N

SCALE 1/2" = 1'-0"

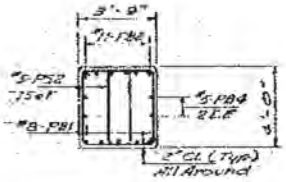


## SECTION M-M

SCALE 1/4" = 1'-0"

| STA. NO. | ELEVATION PIER NO. 1 | STA. NO. | ELEVATION PIER NO. 2 |
|---|---|---|---|
| 1 | 4585.36 | 13 | 4586.96 |
| 2 | 4585.58 | 14 | 4586.95 |
| 3 | 4585.57 | 15 | 4586.93 |
| 4 | 4585.55 | 16 | 4586.92 |
| 5 | 4585.54 | 17 | 4586.91 |
| 6 | 4585.30 | 18 | 4586.89 |
| 13 | 4585.32 | 25 | 4587.12 |
| 14 | 4585.31 | 26 | 4587.34 |
| 15 | 4585.29 | 27 | 4587.32 |
| 16 | 4585.28 | 28 | 4587.31 |
| 17 | 4585.27 | 29 | 4587.30 |
| 18 | 4585.25 | 30 | 4586.06 |
| **STA. NO.** | **ELEVATION PIER NO. 3** | **STA. NO.** | **ELEVATION PIER NO. 4** |
| 7 | 4584.26 | 19 | 4586.76 |
| 8 | 4584.42 | 20 | 4585.79 |
| 9 | 4584.05 | 21 | 4585.42 |
| 10 | 4583.63 | 22 | 4585.03 |
| 11 | 4583.31 | 23 | 4584.63 |
| 12 | 4582.31 | 24 | 4584.30 |
| 19 | 4584.32 | 31 | 4586.32 |
| 20 | 4584.18 | 32 | 4586.18 |
| 21 | 4582.99 | 33 | 4583.81 |
| 22 | 4583.41 | 34 | 4585.44 |
| 23 | 4583.04 | 35 | 4583.07 |
| 24 | 4582.66 | 36 | 4583.47 |

## PIERS

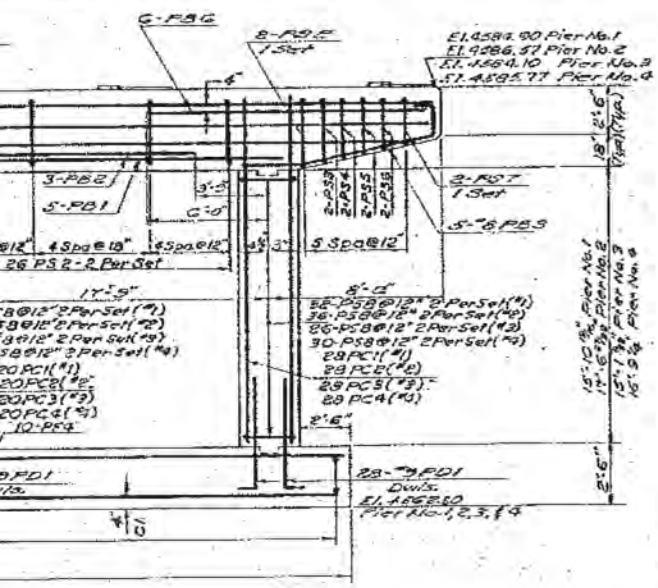


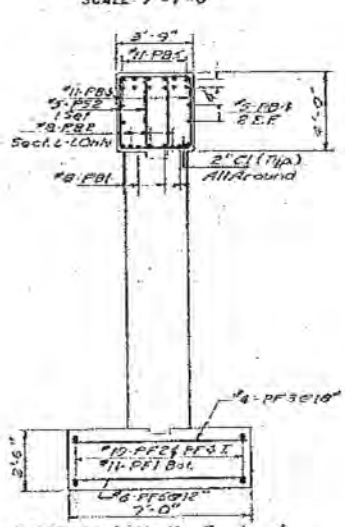


## SECTIONS K-K & L-L

SCALE: 1/4" = 1'-0"

NOTE:
Max. Soil Pressure = 2940 #/□' Group I

REV. 7-8-60 RBJ

REGISTERED PROFESSIONAL ENGINEER NO. 2164 J. R. NEWVILLE STATE OF UTAH

DESIGN AND DRAWING BY
WESTERN ENGINEERS, INC. AND
EDWARDS AND KELCEY
CONSULTING ENGINEERS

SUBMITTED BY [signature] CHIEF ENGINEER
UTAH REGD. L.C. NO. 2164

SHEET 10 OF 16 SHEETS

UTAH STATE ROAD COMMISSION
SALT LAKE CITY, UTAH
BRIDGE DEPARTMENT

OREM 1600 NORTH INTERCHANGE
214'-5 5/8" O.T.O.O. 140° XING L
STA. 523+75.77 I-15-6 (91) 265
LEHI-PROVO UTAH COUNTY

DESIGNED BY YG
DRAWN BY E.G.
TRACED BY
CHECKED BY KY
SCALE AS NOTED
DATE JULY 25, 1966
APPROVED [signature] BRIDGE ENGINEER

DWG. NO. C-353

STRUCTURE 2-F

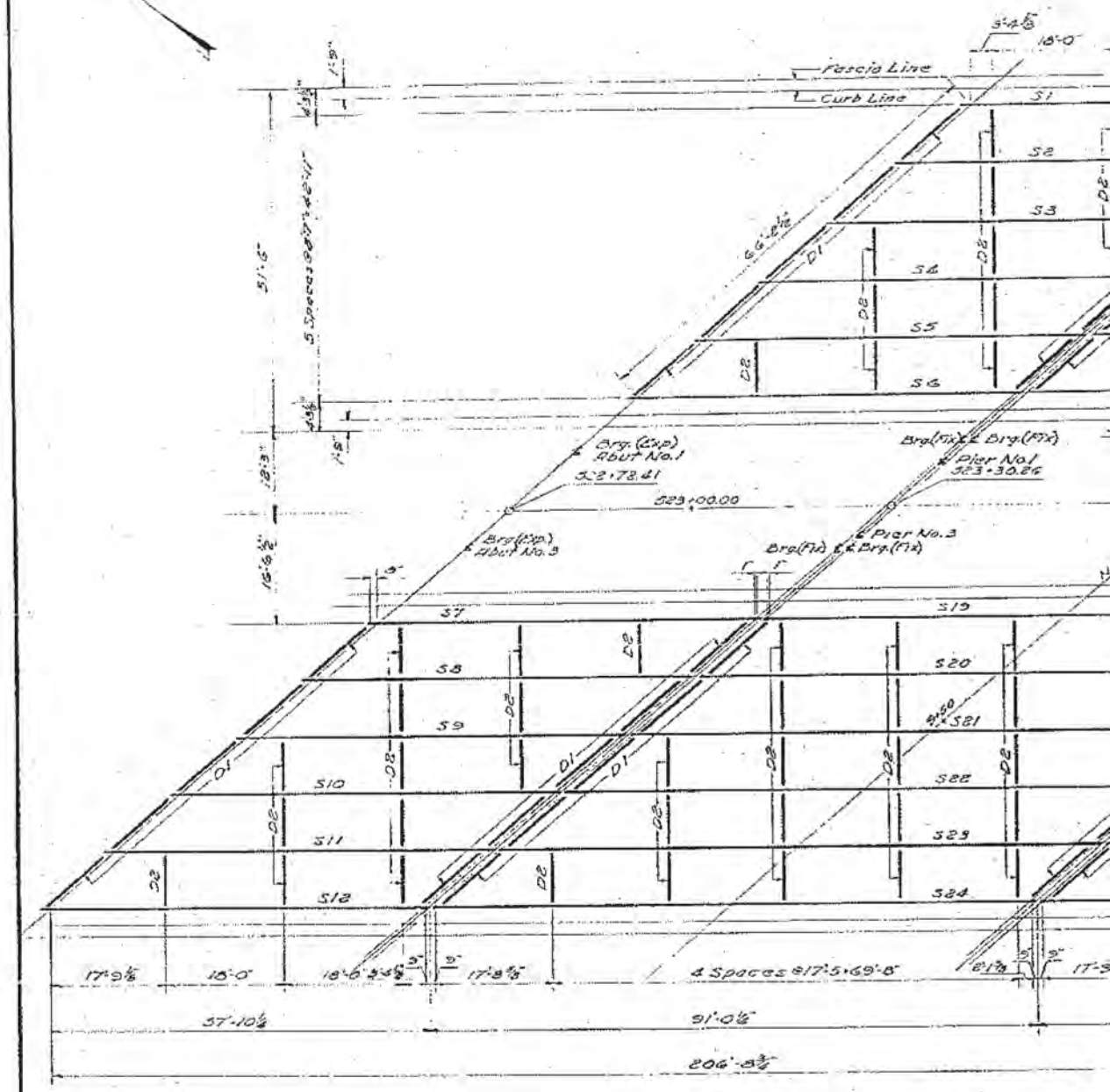


**FRAMING PLAN**

SCALE: 3/32" = 1'-0"

**FOR INFORMATION ONLY**

13

| FED. ROAD DIST. NO. | STATE | FED. AID PROJ. NO. | FISCAL YEAR | SHEET NO. | TOTAL SHEETS |
|---|---|---|---|---|---|
| 07 | UTAH | I-15-6(9)265 | [redacted] | | |

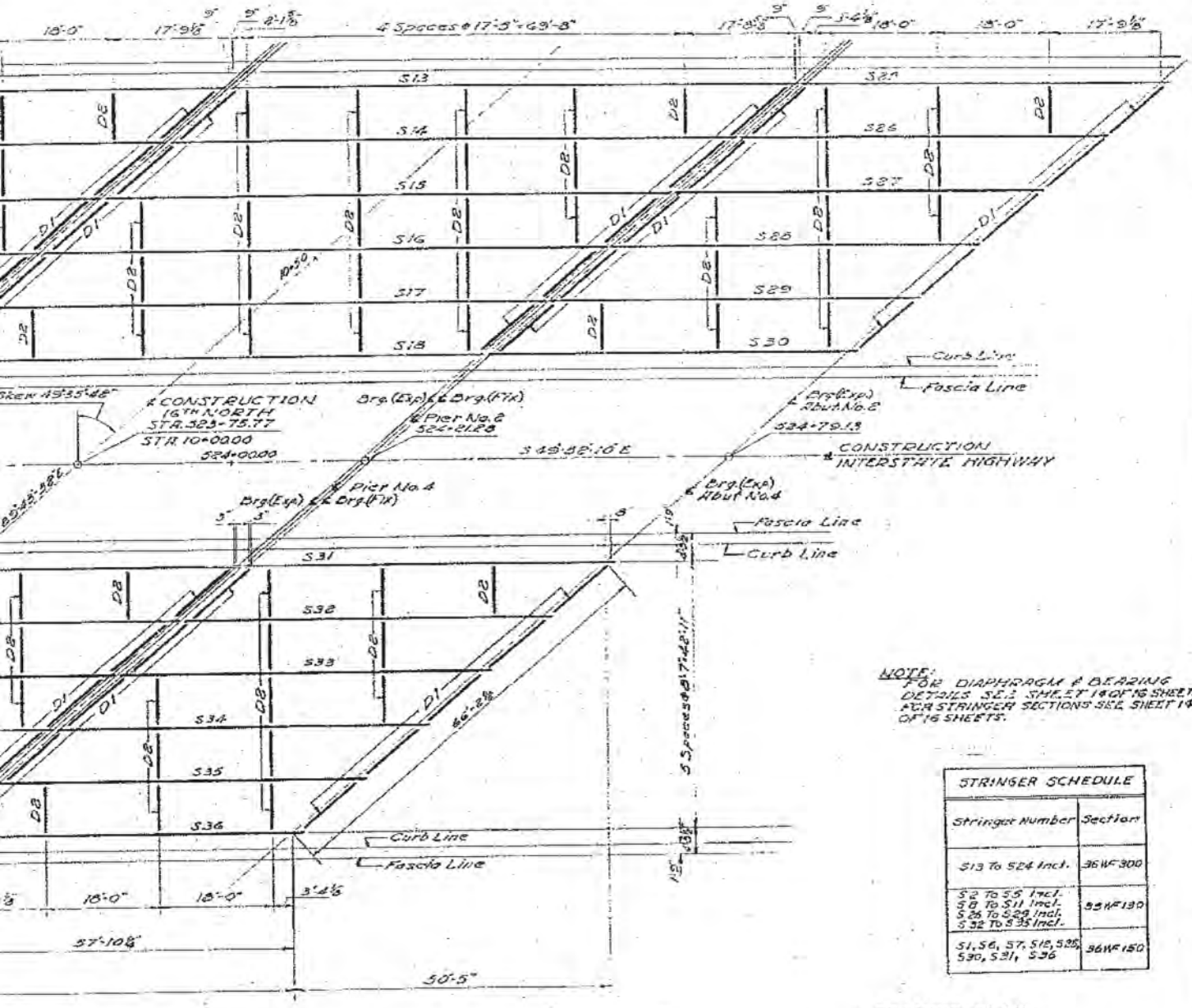


NOTE:
FOR DIAPHRAGM & BEARING DETAILS SEE SHEET 14 OF 16 SHEETS.
FOR STRINGER SECTIONS SEE SHEET 14 OF 16 SHEETS.

| STRINGER SCHEDULE | |
|---|---|
| Stringer Number | Section |
| S13 To S24 Incl. | 36WF300 |
| S2 To S5 Incl.<br>S8 To S11 Incl.<br>S26 To S29 Incl.<br>S32 To S35 Incl. | 33WF130 |
| S1, S6, S7, S12, S25, S30, S31, S36 | 36WF150 |

## FRAMING PLAN

SHEET 11 OF 16 SHEETS

UTAH STATE ROAD COMMISSION
SALT LAKE CITY, UTAH
BRIDGE DEPARTMENT

**OREM 1600 NORTH INTERCHANGE**

214'-5⅜" O.TO O. 140° XING ℄
STA. 323+75.77 I-15-6 (9)265
LEHI - PROVO UTAH COUNTY

DESIGNED BY J.C.B.
DRAWN BY T.Q.
TRACED BY
CHECKED BY K.V.
SCALE AS NOTED
DATE June 28, 1960
APPROVED BY R.L. Sorensen
CHIEF BRIDGE ENGINEER
BR. NO.
DWG. NO. C-353

STRUCTURE 2-F

REGISTERED PROFESSIONAL ENGINEER
NO. 2164
J. R. MENVILLE
STATE OF UTAH

DESIGN AND DRAWING BY
WESTERN ENGINEERS, INC. AND
EDWARDS AND KELCEY
CONSULTING ENGINEERS

SUBMITTED BY J. R. Menville
CHIEF ENGINEER
UTAH ENGR. LIC. NO. 2164

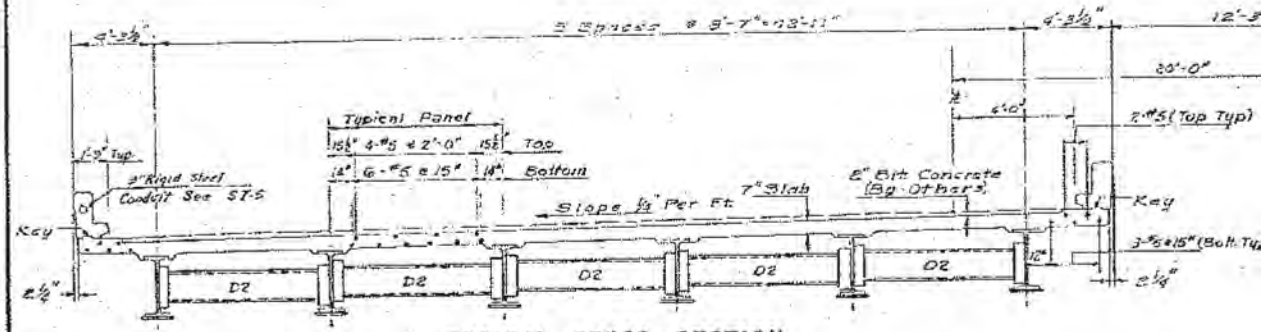


TYPICAL CROSS SECTION
SPAN NO. 1, 2 & 3
SCALE: 1/4" = 1'-0"

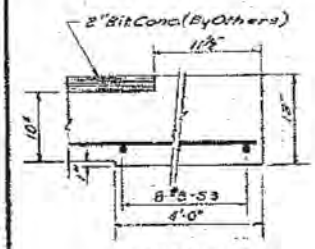


SECTION T-T
SCALE: 1" = 1'-0"

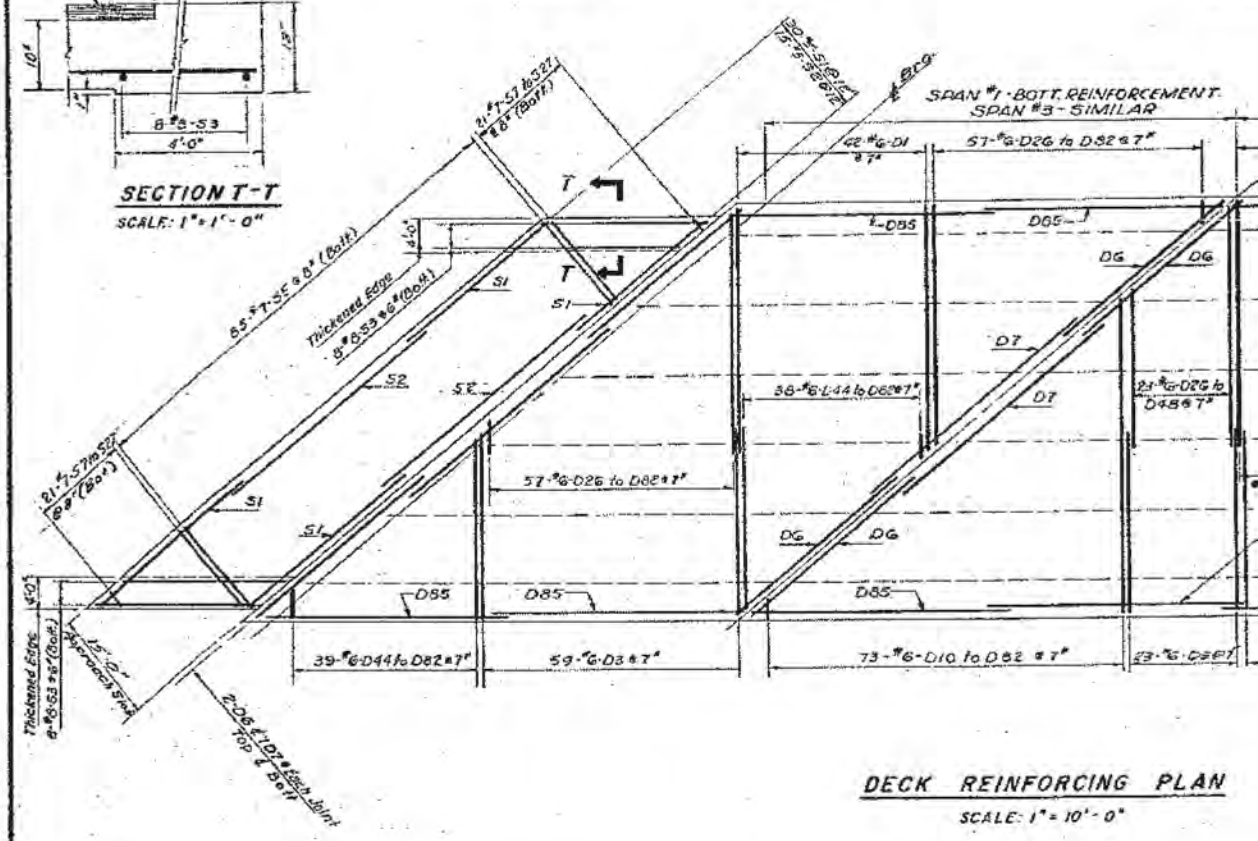


DECK REINFORCING PLAN
SCALE: 1" = 10'-0"

**FOR INFORMATION ONLY**

DGN Files 1P, PW\Bridges\16721\4433.C2S3-12 Foreinfocdom
02-MAY-2005

14

| FED. ROAD DIST. NO. | STATE | FED. AID PROJ. NO. | FISCAL YEAR | SHEET NO. | TOTAL SHEETS |
|---|---|---|---|---|---|
| 07 | UTAH | I-15 5(91)263 | [redacted] | | |

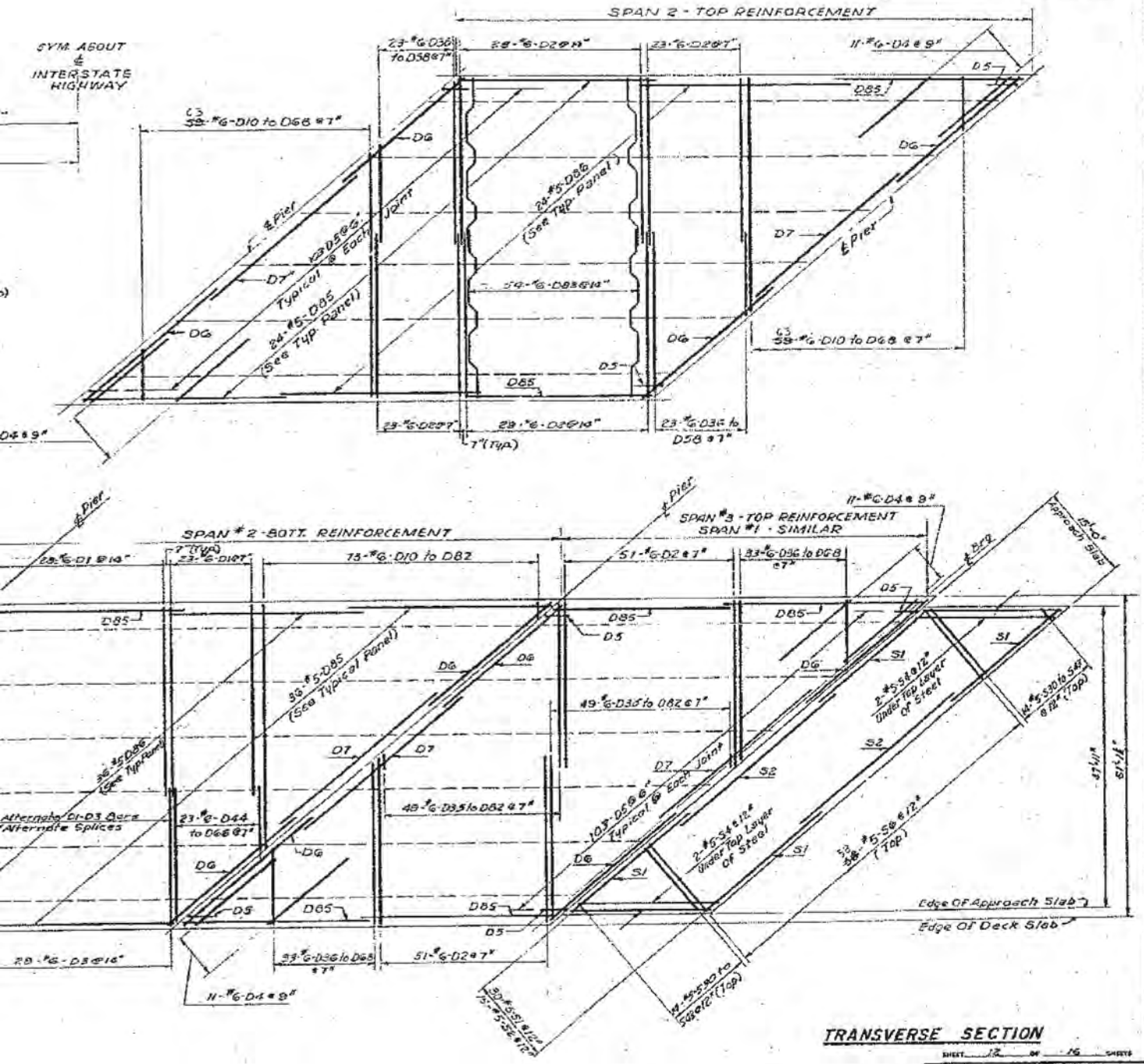


## TRANSVERSE SECTION

SHEET 12 OF 16 SHEETS

UTAH STATE ROAD COMMISSION
SALT LAKE CITY, UTAH
BRIDGE DEPARTMENT

**OREM 1600 NORTH INTERCHANGE**

214'-5 5/8" O.T.O.O. — 140" KING L
STA 523+75.77 — I-15-6 (91)205
LEHI-PROVO — UTAH COUNTY

DESIGNED BY J.L.B. — MADE AS NOTED
DRAWN BY W.L.C. — DATE June 28 1960
TRACED BY — APPROVED
CHECKED BY K.T. — CHIEF BRIDGE ENGINEER

No. C-353

STRUCTURE 2-F

REGISTERED PROFESSIONAL ENGINEER NO. 2164 J. R. NEWVILLE STATE OF UTAH

DESIGN AND DRAWING BY
WESTERN ENGINEERS, INC. AND
EDWARDS AND KELCEY
CONSULTING ENGINEERS

SUBMITTED BY — CHIEF ENGINEER
UTAH ENGR. LIC. NO. 2164

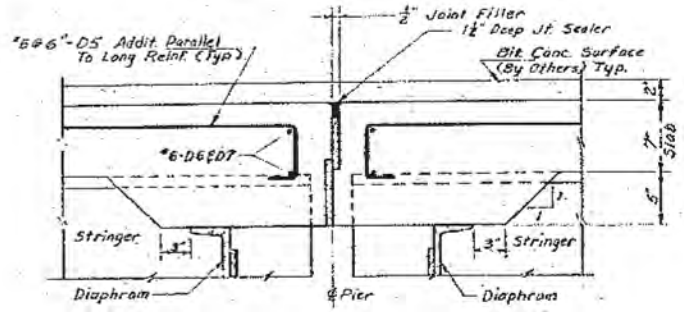


SECTION NORMAL TO PIER NO. 1

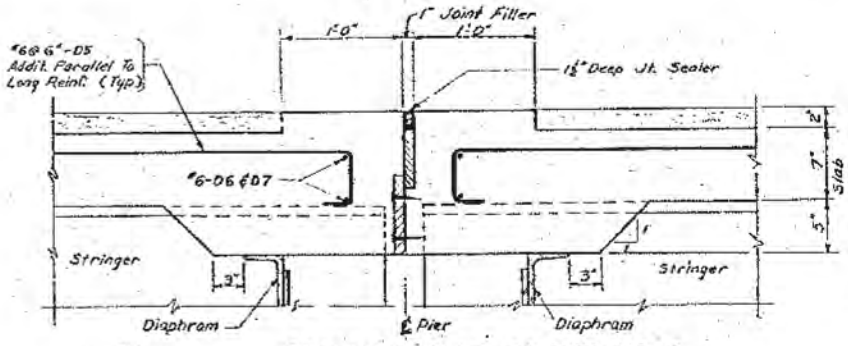


SECTION NORMAL TO PIER NO. 2

D5-#6
to Long

**FOR INFORMATION ONLY**

REVISED BY DATE
REVISED BY DATE
REVISED BY DATE
REVISED BY DATE

DGN Files IP_PwPadmsl1672\4433_C953-13_forinfoolam

22-MAY-2005

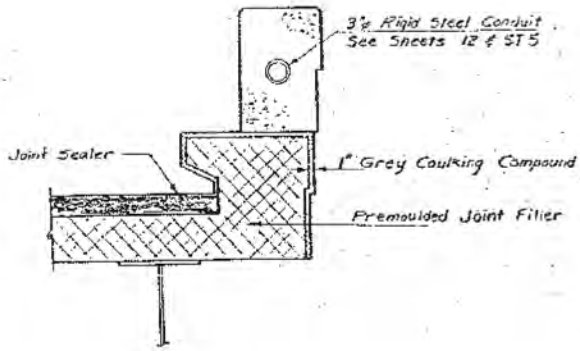


JOINT DETAIL AT CURB

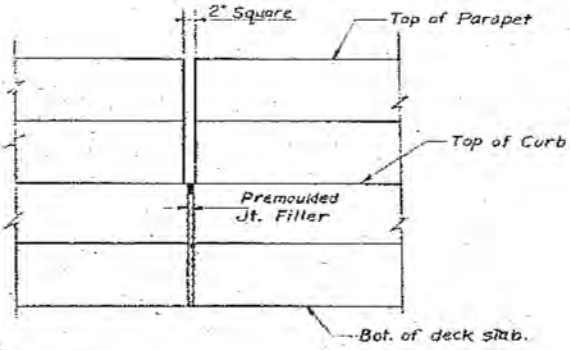


JOINT DETAIL AT PARAPET

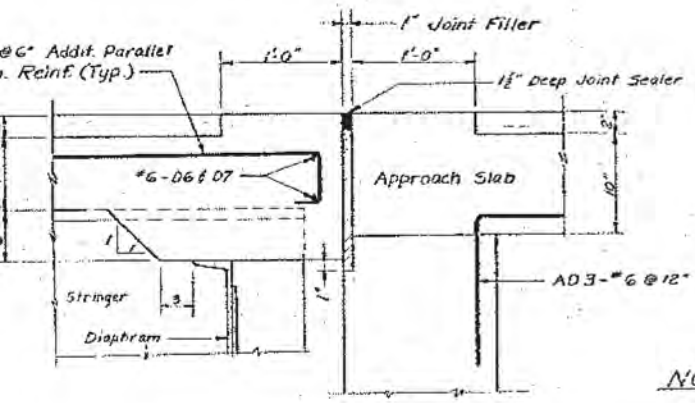


SECTION NORMAL TO ABUTMENTS

NOTE

Joint Sealer Shall Be Two Component Cold Poured Joint Sealing Compound Per State of Utah Standard Specification.

Joint Filler Material Shall be A.A.S.H.O. Designation M-153-54 Type III

UTAH STATE ROAD COMMISSION
SALT LAKE CITY, UTAH
STRUCTURES DIVISION
LEHI - PROVO
OREM 1600 NORTH INTERCHANGE
SLAB JOINT DETAILS

| | | |
|---|---|---|
| DESIGNED BY | CHECKED BY | I-15-6 (8) 265 |
| DRAWN BY R.J.B. | CHECKED BY | PROJECT NUMBER |
| QUANTITIES BY | CHECKED BY | |
| APPROVAL RECOMMENDED BY | GROUP LEADER | STATION |
| APPROVED Jan 6 28 1960 DATE | D. L. Sargent CHIEF STRUCTURAL ENGINEER | UTAH COUNTY |
| ER. NO. | DWG. NO. C-353 | 13 OF 16 |

STRUCTURE 2-F

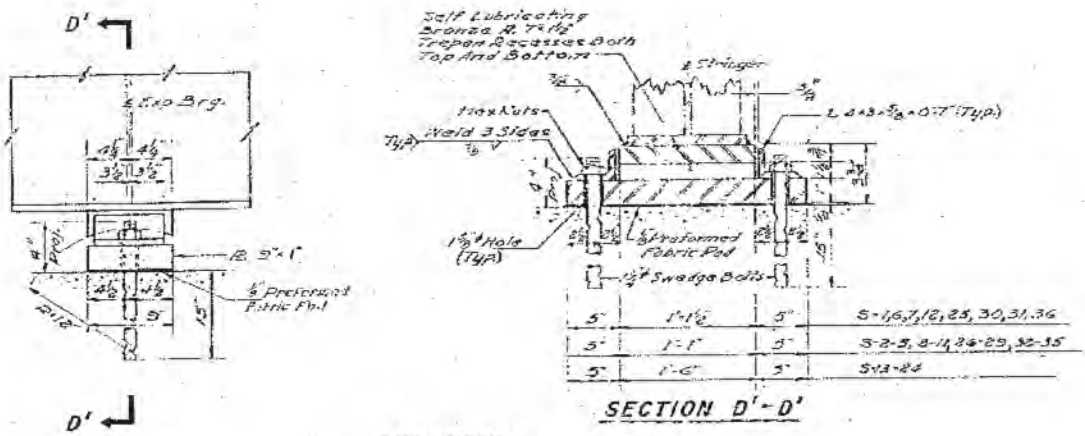


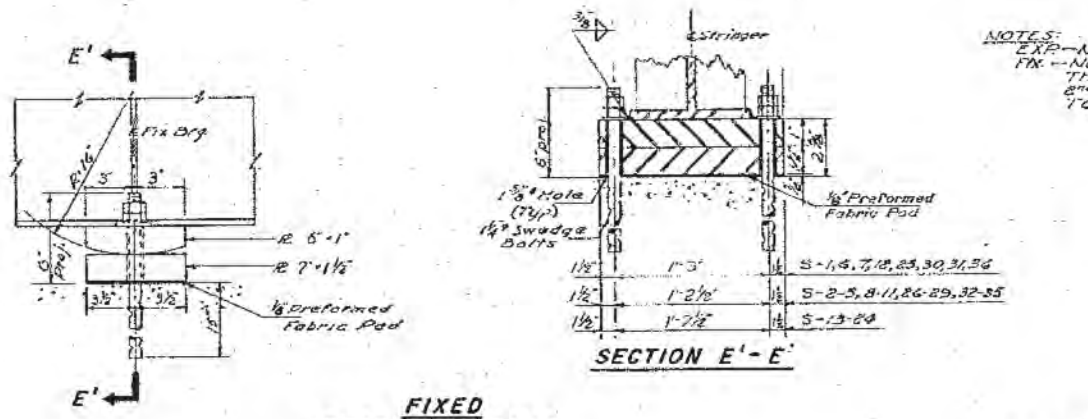


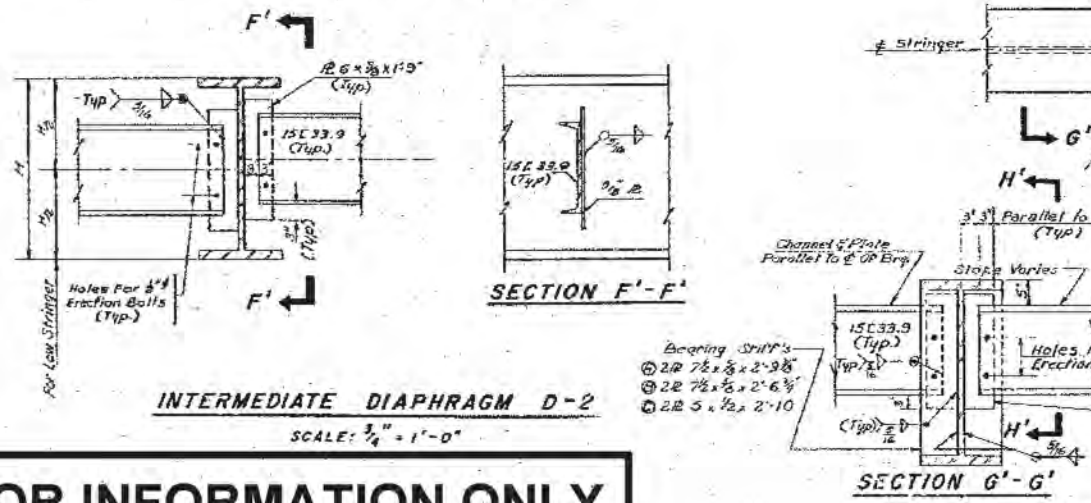


**FOR INFORMATION ONLY**

| FED. ROAD DIST. NO. | STATE | FED. AID PROJ. NO. | FISCAL YEAR | SHEET NO. | TOTAL SHEETS |
|---|---|---|---|---|---|
| U-7 | UTAH | I-15-6(5)126 | [redacted] | | |

16

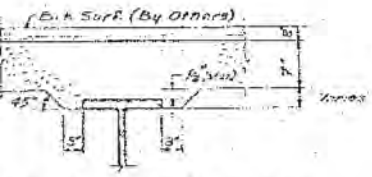


TYPICAL HAUNCH DETAIL

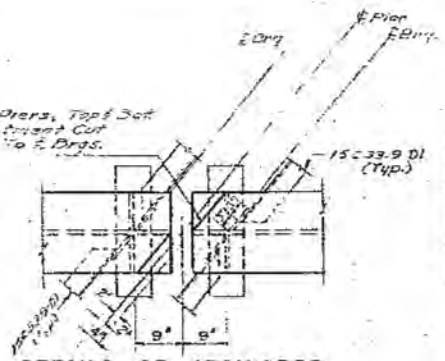


DETAILS OF STRINGERS AT PIERS

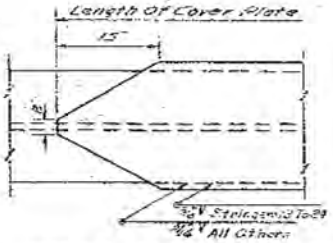


COVER PLATE DETAILS

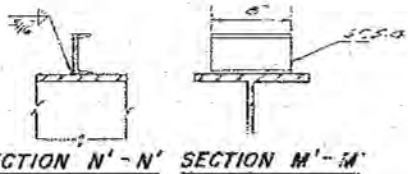


SECTION N'-N' SECTION M'-M'

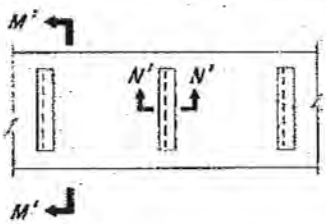


BE HAND TIGHT
BE FINGER TIGHT
CKED OFF 1/2 TURN;
RAWN UP TIGHT

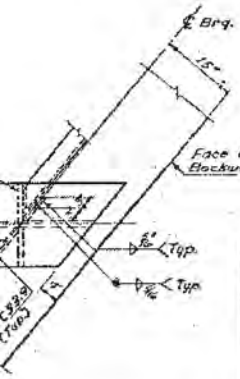


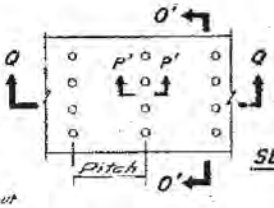

SECTION P'-P'

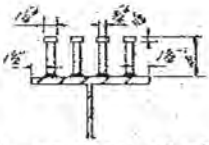


SECTION O'-O'

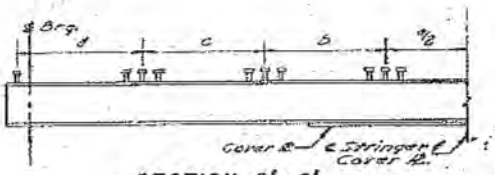


SECTION Q'-Q'

SHEAR CONNECTOR DETAILS

| EQUIVALENT SHEAR CONNECTOR CAPACITY | |
|---|---|
| CONNECTOR | CAPACITY |
| 4-7/8"ϕ Studs x 4" | 10.12" |
| 3-7/8"ϕ Studs x 4" | 10.38" |
| 4 C.S.A. x 0'-8" | 10.80" |

SHEAR CONNECTOR NOTE: PAYMENT IS BASED ON THE WEIGHT OF 4-7/8"ϕ STUD CONECTORS. EQUIVALENT CONNECTORS AS INDICATED IN THE TABLE ABOVE MAY BE USED AT THE SAME SPACING.

STRINGER SCHEDULE

| Bearing Stiff's | Stringer Number | Section | Cover PL | Stud Pitch d | Stud Pitch c | Stud Pitch b | Stud Pitch a | Beam Camber: Dead Load | Beam Camber: Profile | Beam Camber: Total |
|---|---|---|---|---|---|---|---|---|---|---|
| A | S13-S84 | 36WF300 | 18-1"x54'-6" | 34@6" =17'-0" | 18@8" =12'-0" | 12@10" =10'-0" | 10@14" =11'-8" | 3 1/8" | None | 3 1/8" |
| B | S8-S5, S8-S11, S66-S69, S92-S93 | 33WF130 | 14-3/8"x4FG | — | 87@5" =11'-3" | 80@7" =11'-8" | 12@18" =12'-0" | 1 1/8" | None | 1 1/8" |
| C | S15&S7, S18, S28, S30, S34, S36 | 36WF150 | 13-3/8"x32'-6" | — | 23@6" =11'-6" | 17@8" =11'-4" | 18@12" =12'-0" | 1" | None | 1" |

Point Of Max. Camber

STEEL DETAILS

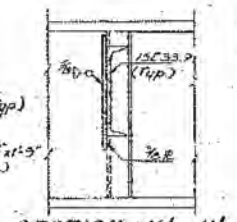


SECTION H'-H'

D-1

DIAPHRAGM CONNECTION NOTE:
RIVETS OR HIGH TENSION BOLTS MAY BE SUBSTITUTED PROVIDED THAT THE CONNECTION BE MADE EQUIVALENT IN STRENGTH TO THE WELDED CONNECTION SHOWN. SHOP DRAWINGS MUST INDICATE THE TYPE OF CONNECTION SELECTED.

REGISTERED PROFESSIONAL ENGINEER NO. 2184 J. R. NEWVILLE STATE OF UTAH

Rev. 7-8-60 RAJ
Rev. 6-28-60 RJB

DESIGN AND DRAWING BY
WESTERN ENGINEERS, INC. AND
EDWARDS AND KELCEY
CONSULTING ENGINEERS

SUBMITTED BY [signature] CHIEF ENGINEER
UTAH ENGR. LIC. NO. 2184

SHEET 14 OF 16 SHEETS

UTAH STATE ROAD COMMISSION
SALT LAKE CITY, UTAH
BRIDGE DEPARTMENT

OREM 1600 NORTH INTERCHANGE
214-5 3/8" O.T.O.O. 140° X1½G ℄
STA 523+75.77 I-15-6 49:2 C5
LEHI-PROVO UTAH COUNTY

4th Cont.

DESIGNED H.L.B. SCALE AS NOTED
DRAWN BY T.C.D. REVIEWED Jan 18 1960
TRACED BY APPROVED 21 Sept 1960
CHECKED BY S.K. CHIEF ENGINEER

BY
NO.

DWG. NO. C-353

STRUCTURE 2-F

| | | | | | |
|---|---|---|---|---|---|
| 7 | REVISED BY B.L.T. | DATE 8-15-60 | REVISED BY | DATE | REVISED BY | DATE | REVISED BY | DATE |
| | Revised web height on end girder to account lower flange at end girder | | | | | | | |

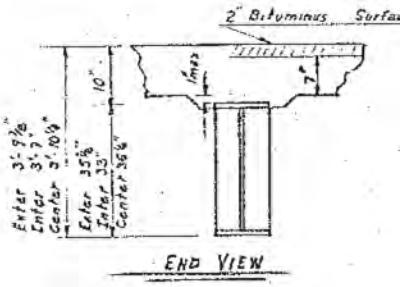


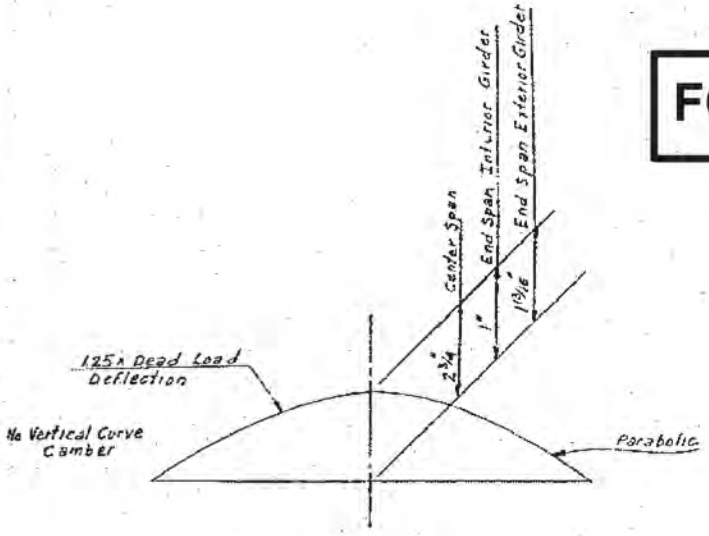


CAMBER DEFLECTION DIAGRAM

**FOR INFORMATION ON**

NOTES:

1. Structural Steel for webs and flanges of w steel beams shall conform to article 1.6. All other structural steel shall conform to A
2. All structural steel shall be given one she red lead primer except surfaces in contact
3. Fabricator shall furnish acceptable radio for all Butt-welds of tension flange
4. Beams shown shall replace WF beams in e All other detail unchanged.
5. Stud unit consists of four 4"x3/8"ϕ studs per

DGN Files IP_PWPubes\16721\4433_C353-14a_ForInfoOnly
22-MAY-2005

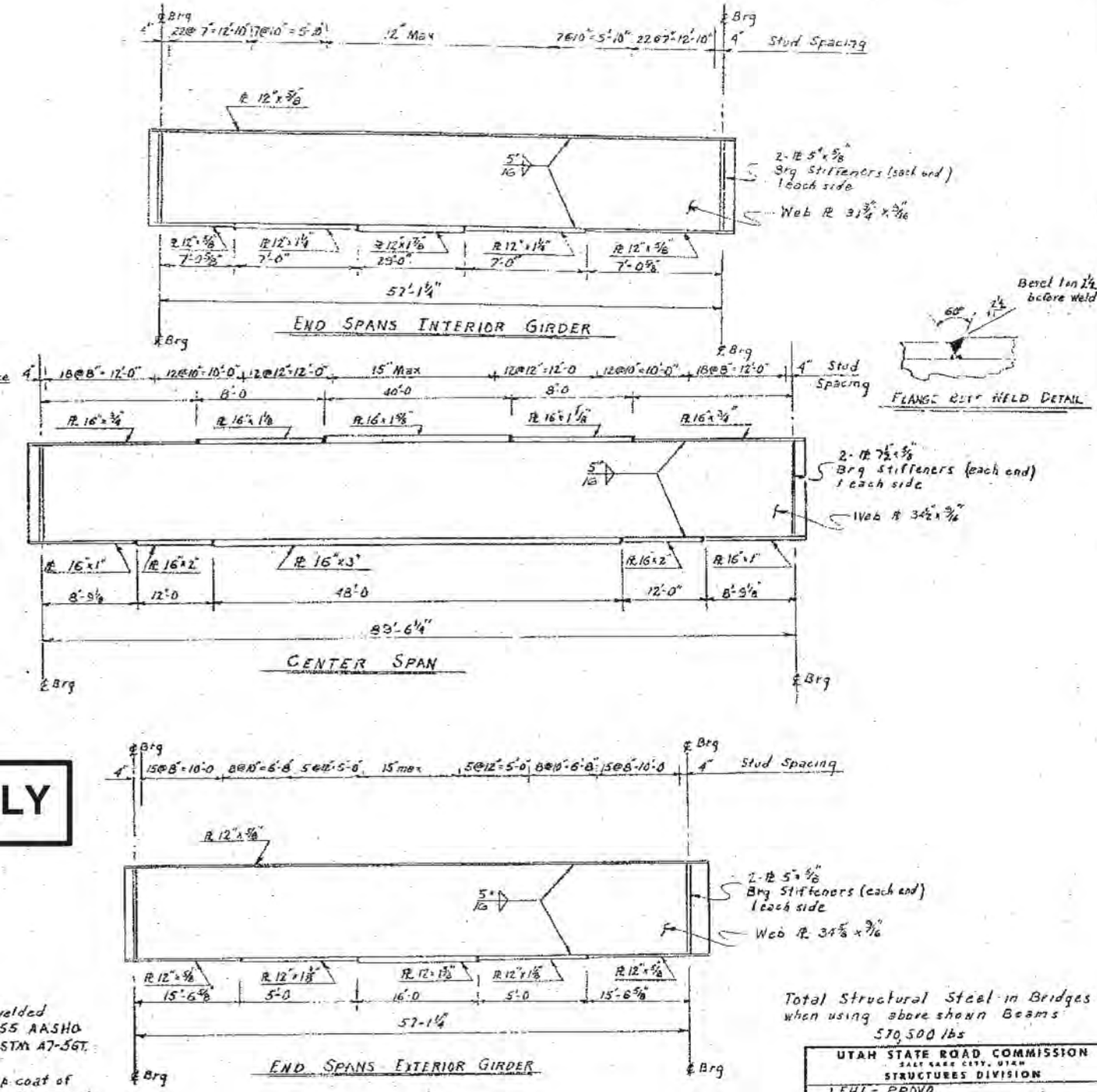


LY

elded
55 AASHO
STM A7-56T.

p coat of
with concrete

raphic plates
plates.

aisting plans.

row.

Total Structural Steel in Bridges when using above shown Beams
570,500 lbs

BEAM ELEVATIONS

FOR WELDED PLATE GIRDERS
ALTERNATE DESIGN FOR OREM 1600 NORTH INTERCHANGE

| | | |
|---|---|---|
| UTAH STATE ROAD COMMISSION<br>SALT LAKE CITY, UTAH<br>STRUCTURES DIVISION | | |
| LEHI - PROVO | | |
| OREM 1600 NORTH INTERCHANGE | | |
| STEEL DETAILS - ALTERNATE | | |
| DESIGNED BY NW | CHECKED BY O.L.T. | I-15-6(9)265 PROJECT NUMBER |
| DRAWN BY B.L.T. | CHECKED BY NW | |
| QUANTITIES BY NW | CHECKED BY O.L.T. | 523+1577 STATION |
| APPROVAL RECOMMENDED BY GROUP LEADER | | Utah COUNTY |
| APPROVED 5-1-18-1960 DATE | O.L. Sorenson Jr. CHIEF ENGINEER-ADM. ENGR. | |
| BR. NO. | DWG. NO. C-353 | 14A of 16 |

# BILL OF REINFORCING

| MARK | SIZE | LGTH. | NO. REQ. | TOTAL LENGTH | TYPE | A | B | C | D | E | F | G | H | J | K | O |
|---|---|---|---|---|---|---|---|---|---|---|---|---|---|---|---|---|
| | | | | ABUTMENT REINFORCEMENT | | | | | | | | | | | | |
| AD1 | 5 | 5'-3" | 296 | 1553'-6" | 4 | | 12" | 6'-3" | | | | | | | | |
| 2 | 5 | 2'-6" | 168 | 420'-0" | 1 | | | | | | | | | | | |
| 3 | 6 | 4'-0" | 316 | 1264'-0" | 4 | | 1'-6" | 2'-6" | | | | | | | | |
| AF1 | 5 | 29'-0" | 120 | 3480'-0" | 1 | | | | | | | | | | | |
| 2 | | 5'-3" | 640 | 3360'-0" | | | | | | | | | | | | |
| 3 | | 15'-9" | 20 | 315'-0" | | | | | | | | | | | | |
| 4 | | 9'-0" | 4 | 36'-0" | | | | | | | | | | | | |
| 5 | | 8'-0" | 4 | 32'-0" | | | | | | | | | | | | |
| 6 | | 20'-0" | 20 | 400'-0" | | | | | | | | | | | | |
| 7 | | 12'-0" | 20 | 240'-0" | | | | | | | | | | | | |
| 8 | | 1'-5" | 8 | 11'-4" | | | | | | | | | | | | |
| 9 | | 2'-9" | 8 | 22'-0" | | | | | | | | | | | | |
| 10 | | 4'-0" | 10 | 40'-0" | | | | | | | | | | | | |
| 11 | | 2'-8" | 4 | 10'-8" | | | | | | | | | | | | |
| 12 | 5 | 28'-0" | 20 | 560'-0" | 1 | | | | | | | | | | | |
| AS1 | 5 | 29'-8" | 18 | 289'-0" | 25 | | 22'-8" | 12" | 10" | 12" | | | | | | |
| 2 | | 25'-0" | 48 | 1200'-0" | 1 | | | | | | | | | | | |
| 3 | | 29'-8" | 12 | 351'-0" | 6 | | 28'-3" | 12" | 10" | 12" | | | | | | |
| 4 | | 27'-6" | 12 | 330'-0" | 1 | | | | | | | | | | | |
| 6 | | 27'-0" | 12 | 324'-0" | | | | | | | | | | | | |
| 7 | | 24'-3" | 12 | 291'-0" | | | | | | | | | | | | |
| 8 | | 27'-2" | 12 | 326'-0" | | | | | | | | | | | | |
| 9 | | 25'-6" | 12 | 306'-0" | | | | | | | | | | | | |
| 10 | | 24'-0" | 12 | 288'-0" | | | | | | | | | | | | |
| 11 | | 6'-0" | 52 | 312'-0" | | | | | | | | | | | | |
| 12 | | 7'-8" | 52 | 398'-8" | | | | | | | | | | | | |
| 13 | | 5'-0" | 52 | 270'-0" | | | | | | | | | | | | |
| 14 | | 6'-8" | 52 | 346'-8" | | | | | | | | | | | | |
| 15 | | 2'-5" | 72 | 174'-0" | | | | | | | | | | | | |
| 16 | | 4'-2" | 54 | 225'-2" | | | | | | | | | | | | |
| 17 | | 1'-10" | 19 | 34'-10" | | | | | | | | | | | | |
| 18 | | 3'-0" | 17 | 51'-0" | | | | | | | | | | | | |
| 19 | | 3'-5" | 17 | 58'-1" | | | | | | | | | | | | |
| 20 | | 4'-6" | 37 | 166'-6" | | | | | | | | | | | | |
| 21 | 5 | 4'-7" | 212 | 971'-8" | | | | | | | | | | | | |
| 22 | 6 | 26'-0" | 12 | 312'-0" | | | | | | | | | | | | |
| 23 | 6 | 25'-6" | 12 | 306'-0" | | | | | | | | | | | | |
| 24 | 6 | 24'-0" | 8 | 192'-0" | | | | | | | | | | | | |
| 25 | 6 | 27'-0" | 4 | 108'-0" | 1 | | | | | | | | | | | |
| 27 | 6 | 5'-5" | 218 | 1148'-5" | 4 | | 1'-8" | 3'-9" | | | | | | | | |
| | | | | PIER REINFORCEMENT | | | | | | | | | | | | |
| PD1 | 2 | 7'-2" | 384 | 2752'-0" | 4 | | 12" | 6'-2" | | | | | | | | |
| PC1 | 9 | 19'-0" | 96 | 1824'-0" | 1 | | | | | | | | | | | |
| 2 | | 21'-0" | 96 | 2016'-0" | | | | | | | | | | | | |
| 3 | | 18'-9" | 96 | 1800'-0" | | | | | | | | | | | | |
| 4 | 9 | 18'-6" | 96 | 1776'-0" | 1 | | | | | | | | | | | |
| PF1 | 11 | 31'-6" | 96 | 3024'-0" | 1 | | | | | | | | | | | |
| 2 | 10 | 20'-9" | 40 | 830'-0" | | | | | | | | | | | | |
| 3 | 4 | 6'-4" | 159 | 1038'-2" | | | | | | | | | | | | |
| 4 | 10 | 21'-5" | 80 | 1712'-3" | | | | | | | | | | | | |
| 5 | 6 | 6'-4" | 249 | 1594'-6" | 1 | | | | | | | | | | | |
| PS1 | | | | | | | | | | | | | | | | |
| 2 | 5 | 11'-8" | 328 | 3820'-0" | 18 | 5" | 2'-0" | 3'-8" | 2'-0" | 3'-8" | | | | | | |
| 3 | | 11'-4" | 16 | 181'-8" | | | | 3'-6" | | 3'-6" | | | | | | |
| 4 | | 11'-0" | 16 | 176'-0" | | | | 3'-3" | | 3'-3" | | | | | | |
| 5 | | 10'-8" | 16 | 170'-8" | | | | 3'-1" | | 3'-1" | | | | | | |
| 6 | | 10'-4" | 16 | 165'-4" | | | | 2'-11" | | 2'-11" | | | | | | |
| 7 | | 10'-0" | 16 | 160'-0" | | | 2'-0" | 2'-9" | 2'-0" | 2'-9" | | | | | | |
| 8 | 5 | 8'-2" | 496 | 4050'-8" | 12 | 5" | 1'-7" | 2'-4" | 1'-7" | 2'-4" | | | | | | |
| PB1 | 8 | 17'-0" | 60 | 1020'-0" | 1 | | | | | | | | | | | |
| 2 | 8 | 10'-3" | 24 | 246'-0" | 1 | | | | | | | | | | | |
| 3 | 8 | 18'-0" | 40 | 720'-0" | 22 | 12" | 3'-0" | 7'-0" | 2'-0" | | | | 18" | | | |
| 4 | 5 | 36'-0" | 32 | 1152'-0" | 1 | | | | | | | | | | | |
| 5 | 11 | 38'-9" | 48 | 1864'-0" | 1 | | | | | | | | | | | |

| MARK | SIZE | LGTH. | NO. REQ. | TOTAL LENGTH | TYPE | A | B | C | D | E | F |
|---|---|---|---|---|---|---|---|---|---|---|---|
| PB6 | 11 | 14'-3" | 48 | 684'-0" | 1 | | | | | | |
| | | | | WINGWALL REINFORCEMENT | | | | | | | |
| AW1 | 5 | 7'-8" | 38 | 291'-4" | 1 | | | | | | |
| 2 | | 8'-10" | 12 | 106'-0" | | | | | | | |
| 3 | | 9'-6" | 54 | 513'-0" | | | | | | | |
| 4 | | 6'-8" | 22 | 146'-8" | | | | | | | |
| 5 | | 8'-6" | 20 | 170'-0" | | | | | | | |
| 6 | | 10'-9" | 34 | 365'-6" | | | | | | | |
| 8 | | 10'-6" | 6 | 63'-0" | 25 | 9'-6" | 12" | 10" | 12" | | |
| 9 | | 12'-5" | 6 | 63'-0" | 1 | | | | | | |
| 10 | | 18'-9" | 6 | 112'-6" | 6 | 19'-9" | 12" | 10" | 12" | | |
| 11 | | 16'-7" | 12 | 199'-0" | 1 | | | | | | |
| 12 | | 16'-4" | 6 | 98'-0" | 25 | 15'-6" | 12" | 10" | 12" | | |
| 13 | | 26'-0" | 6 | 160'-6" | 6 | 25'-9" | 12" | 10" | 12" | | |
| 14 | | 24'-7" | 6 | 147'-6" | 1 | | | | | | |
| 15 | | 12'-6" | 4 | 50'-0" | | | | | | | |
| 16 | | 24'-0" | 6 | 144'-0" | | | | | | | |
| 17 | | 28'-5" | 6 | 170'-6" | | | | | | | |
| 18 | | 15'-6" | 4 | 62'-0" | | | | | | | |
| 19 | | 20'-5" | 4 | 81'-8" | | | | | | | |
| 20 | | 19'-9" | 6 | 79'-6" | | | | | | | |
| 21 | 5 | 18'-6" | 6 | 111'-0" | 1 | | | | | | |
| | | | | DECK REINFORCEMENT | | | | | | | |
| D1 | 6 | 30'-8" | 270 | 8235'-0" | 1 | | | | | | |
| 2 | | 26'-0" | 612 | 15912'-0" | 1 | | | | | | |
| 3 | | 22'-0" | 338 | 7436'-0" | 1 | | | | | | |
| 4 | | 15'-0" | 66 | 990'-0" | 1 | | | | | | |
| 5 | | 4'-0" | 1236 | 4944'-0" | 25 | 4" | 5" | 3'-3" | | | |
| 6 | | 26'-0" | 48 | 1248'-0" | 1 | | | | | | |
| 7 | | 32'-0" | 24 | 768'-0" | | | | | | | |
| 10 | | 38'-6" | 8 | 308'-0" | | | | | | | |
| 11 | | 38'-0" | | 304'-0" | | | | | | | |
| 12 | | 37'-6" | | 300'-0" | | | | | | | |
| 13 | | 37'-0" | | 296'-0" | | | | | | | |
| 14 | | 36'-6" | | 292'-0" | | | | | | | |
| 15 | | 36'-0" | | 288'-0" | | | | | | | |
| 16 | | 35'-6" | | 284'-0" | | | | | | | |
| 17 | | 35'-0" | | 280'-0" | | | | | | | |
| 18 | | 34'-6" | | 276'-0" | | | | | | | |
| 19 | | 34'-0" | | 272'-0" | | | | | | | |
| 20 | | 33'-6" | | 268'-0" | | | | | | | |
| 21 | | 33'-0" | | 264'-0" | | | | | | | |
| 22 | | 32'-6" | | 260'-0" | | | | | | | |
| 23 | | 32'-0" | | 256'-0" | | | | | | | |
| 24 | | 31'-6" | | 252'-0" | | | | | | | |
| 25 | | 31'-0" | 8 | 248'-0" | | | | | | | |
| 26 | | 30'-6" | 18 | 549'-0" | | | | | | | |
| 27 | | 30'-0" | | 540'-0" | | | | | | | |
| 28 | | 29'-6" | | 531'-0" | | | | | | | |
| 29 | | 29'-0" | | 522'-0" | | | | | | | |
| 30 | | 28'-6" | | 513'-0" | | | | | | | |
| 31 | | 28'-0" | | 504'-0" | | | | | | | |
| 32 | | 27'-6" | | 495'-0" | | | | | | | |
| 33 | | 27'-0" | | 486'-0" | | | | | | | |
| 34 | | 26'-6" | 18 | 477'-0" | | | | | | | |
| 35 | | 26'-0" | 26 | 676'-0" | | | | | | | |
| 36 | | 25'-6" | 38 | 969'-0" | | | | | | | |
| 37 | | 25'-0" | | 950'-0" | | | | | | | |
| 38 | | 24'-6" | | 931'-0" | | | | | | | |
| 39 | | 24'-0" | | 912'-0" | | | | | | | |
| 40 | | 23'-6" | | 893'-0" | | | | | | | |
| 41 | | 23'-0" | | 874'-0" | | | | | | | |
| 42 | | 22'-6" | | 855'-0" | | | | | | | |
| 43 | | 22'-0" | 38 | 834'-0" | | | | | | | |
| 44 | | 21'-6" | 48 | 1032'-0" | | | | | | | |
| 45 | | 21'-0" | | 1008'-0" | | | | | | | |
| 46 | | 20'-6" | | 984'-0" | | | | | | | |
| 47 | | 20'-0" | | 960'-0" | | | | | | | |
| 48 | | 19'-6" | 48 | 936'-0" | | | | | | | |
| 49 | | 19'-0" | 46 | 874'-0" | | | | | | | |
| 50 | | 18'-6" | 46 | 851'-0" | | | | | | | |
| 51 | | 18'-0" | 46 | 828'-0" | | | | | | | |
| 52 | 6 | 17'-6" | 46 | 805'-0" | 1 | | | | | | |

Additional Steel

4 pcs. per Section
4 Sections x 4 x 25

## STEEL

| G | H | J | K | O |
|---|---|---|---|---|

... 29'-0" long
... ×.464
... ×,696,93#

| MARK | SIZE | LGTH. | NO. REQ. | TOTAL LENGTH | TYPE | A | B | C | D | E | F | G | H | J | K | O |
|---|---|---|---|---|---|---|---|---|---|---|---|---|---|---|---|---|
| 53 | 6 | 17'-0" | 46 | 782'-0" | 1 | | | | | | | | | | | |
| 54 | | 16'-6" | | 759'-0" | | | | | | | | | | | | |
| 55 | | 16'-0" | | 736'-0" | | | | | | | | | | | | |
| 56 | | 15'-6" | | 713'-0" | | | | | | | | | | | | |
| 57 | | 15'-0" | | 690'-0" | | | | | | | | | | | | |
| 58 | | 14'-6" | 46 | 667'-0" | | | | | | | | | | | | |
| 59 | | 14'-0" | 42 | 588'-0" | | | | | | | | | | | | |
| 60 | | 13'-6" | | 567'-0" | | | | | | | | | | | | |
| 61 | | 13'-0" | | 546'-0" | | | | | | | | | | | | |
| 62 | | 12'-6" | | 525'-0" | | | | | | | | | | | | |
| 63 | | 12'-0" | | 504'-0" | | | | | | | | | | | | |
| 64 | | 11'-6" | | 483'-0" | | | | | | | | | | | | |
| 65 | | 11'-0" | | 462'-0" | | | | | | | | | | | | |
| 66 | | 10'-6" | 42 | 441'-0" | | | | | | | | | | | | |
| 67 | | 10'-0" | 40 | 400'-0" | | | | | | | | | | | | |
| 68 | | 9'-6" | 40 | 380'-0" | | | | | | | | | | | | |
| 69 | | 9'-0" | 28 | 252'-0" | | | | | | | | | | | | |
| 70 | | 8'-6" | | 238'-0" | | | | | | | | | | | | |
| 71 | | 8'-0" | | 224'-0" | | | | | | | | | | | | |
| 72 | | 7'-6" | | 210'-0" | | | | | | | | | | | | |
| 73 | | 7'-0" | | 196'-0" | | | | | | | | | | | | |
| 74 | | 6'-6" | | 182'-0" | | | | | | | | | | | | |
| 75 | | 6'-0" | | 168'-0" | | | | | | | | | | | | |
| 76 | | 5'-6" | | 154'-0" | | | | | | | | | | | | |
| 77 | | 5'-0" | | 140'-0" | | | | | | | | | | | | |
| 78 | | 4'-6" | | 126'-0" | | | | | | | | | | | | |
| 79 | | 4'-0" | | 112'-0" | | | | | | | | | | | | |
| 80 | | 3'-6" | | 98'-0" | | | | | | | | | | | | |
| 81 | | 3'-0" | | 84'-0" | | | | | | | | | | | | |
| 82 | | 2'-6" | 28 | 70'-0" | 1 | | | | | | | | | | | |
| 83 | 6 | 28'-3" | 108 | 3051'-0" | 27 | | 5'-6" | 7" | 4'-4" | 3'-5" | | | 5" | | 5" | |
| 85 | 6 | 31'-0" | 720 | 22320'-0" | 1 | | | | | | | | | | | |
| 86 | 6 | 33'-0" | 120 | 3960'-0" | 1 | | | | | | | | | | | |
| | | | | CURB & PARAPET REINFOREMENT | | | | | | | | | | | | |
| DC1 | 5 | 8'-1½" | 672 | 5460'-0" | 24 | 6" | 2'-10½" | 2'-7" | 12" | 12" | 1" | 12" | | | | |
| 2 | 5 | 3'-1" | 806 | 2485'-0" | 20 | 1'-4½" | 1'-8½" | | | | | | | | | |
| 3 | 5 | 6'-0" | 134 | 804'-0" | 26 | | 2'-10" | 8" | 2'-6" | | 1" | 12" | | | | |
| 4 | 4 | 8'-0" | 18 | 144'-0" | 1 | | | | | | | | | | | |
| 5 | 4 | 30'-9" | 72 | 2214'-0" | 1 | | | | | | | | | | | |
| 6 | 4 | 29'-6" | 96 | 2832'-0" | 1 | | | | | | | | | | | |
| 7 | 4 | 15'-3" | 36 | 549'-0" | 1 | | | | | | | | | | | |
| 8 | 4 | 23'-6" | 18 | 423'-0" | 1 | | | | | | | | | | | |

| FED. ROAD DIST. NO. | STATE | FED. AID PROJ. NO. | FISCAL YEAR | SHEET NO. | TOTAL SHEETS |
|---|---|---|---|---|---|
| UT. | UTAH | I-15-6(9)265 | [redacted] | | |

## BAR TYPES

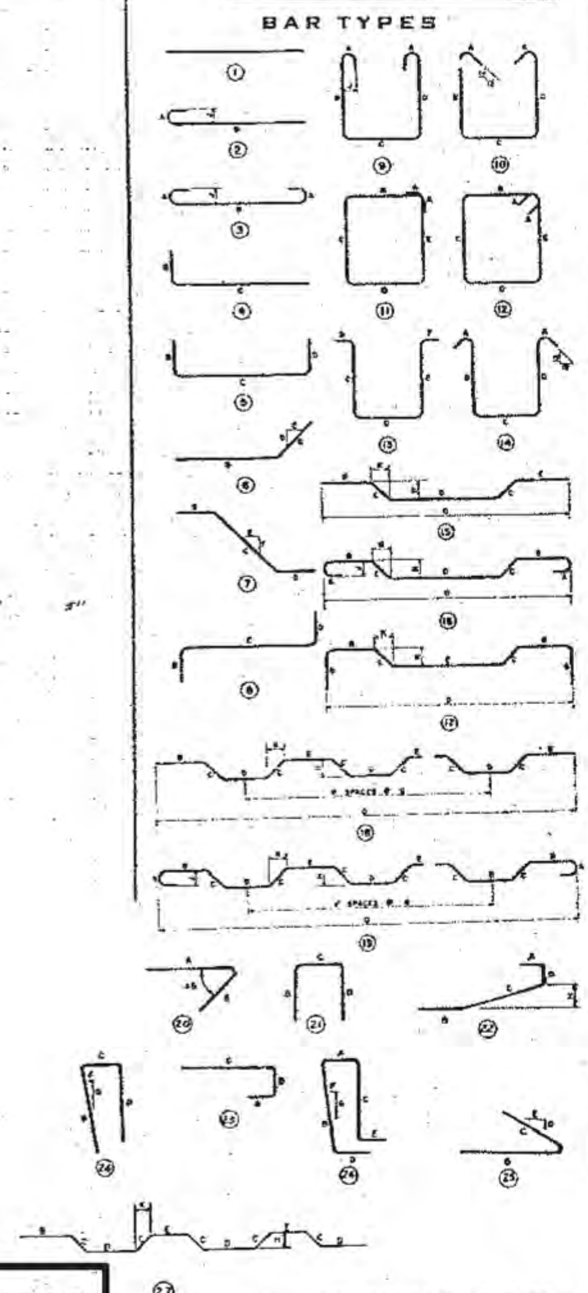

HOOK DETAIL

FOR INFORMATION ONLY

### GENERAL NOTES

1. All placing drawings, detailing, and fabrication shall be in accordance with the "Manual of Standard Practice for Detailing Reinforced Concrete Structures (ACI 315-57)".
2. All dimensions shown for bar bending details are out-to-out of bars.

REV. 3-8-66 RBJ

DESIGN AND DRAWING BY
WESTERN ENGINEERS, INC. AND
EDWARDS AND KELCEY
CONSULTING ENGINEERS

REGISTERED PROFESSIONAL ENGINEER NO. 2164 J. R. NEWVILLE STATE OF UTAH

SUBMITTED BY [signature] CHIEF ENGINEER
UTAH ENGR. LIC. NO. 2164

## REINFORCING SCHEDULE

SHEET 15 OF 18 SHEETS

UTAH STATE ROAD COMMISSION
SALT LAKE CITY, UTAH
BRIDGE DEPARTMENT

**OREM 1600 NORTH INTERCHANGE**
214'-5⅝" O. TO O. 140° XING ∠ 4th Conts.
STA. 523+75.77 I-15-6(9)265
LEHI-PROVO UTAH COUNTY

DESIGNED BY A.K. SCALE AS NOTED
DRAWN BY T.E.M. ISSUED ...
TRACED BY ... APPROVED C.L. ...
CHECKED BY R.Z. CHIEF BRIDGE ENGINEER

DWG. NO. C-353

STRUCTURE 2-F

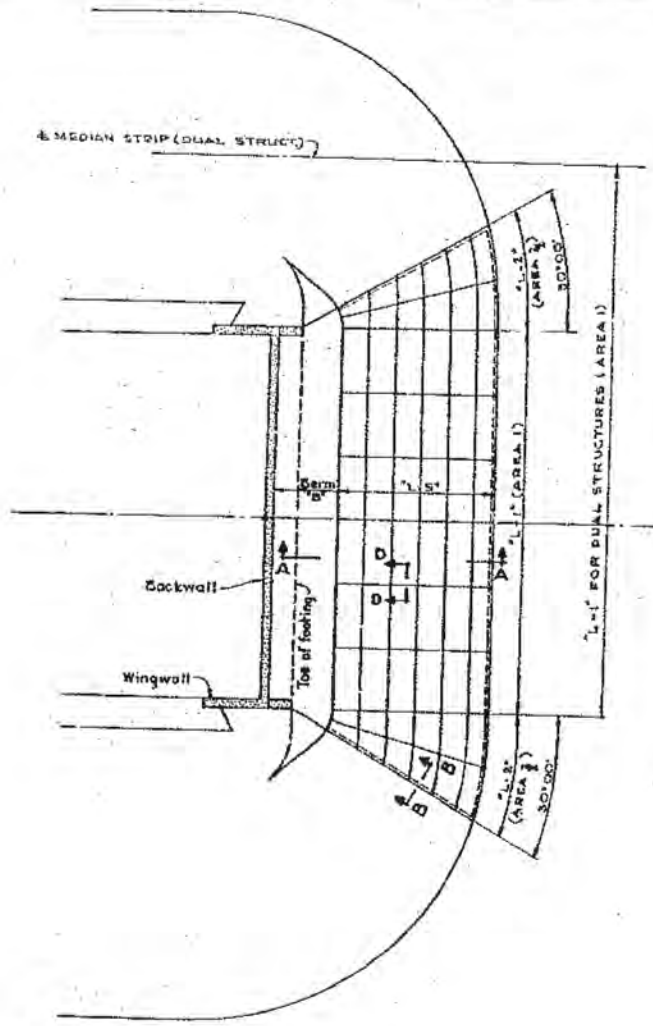


UP TO 30°00' SKEW

PLAN

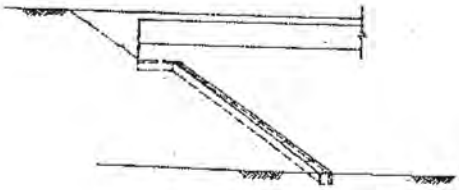

ELEVATION

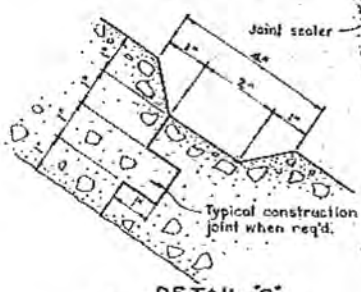


DETAIL "C"
(For vertical & horizontal scoring)

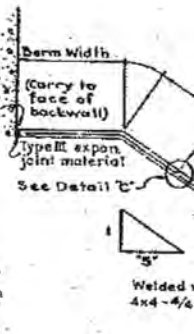


**FOR INFORMATION ONLY**

DATE
REVISED BY
DATE
REVISED BY
DATE
REVISED BY
DATE
REVISED BY

DGN: Files IP PWPrograms16721\4433\C353-SP-2 forinfo.dgn

02-MAY-2005

## LIST OF REQUIRED REINF. CONC. SLOPE PROTECTION

| Struct. No. | Loc. No. | C.O. Wall P'dist. | C.O. Wall Area | Berm Width | Skew θ | Length "L-1" | Type | Length "L-2" | Length "L-3" | Length "L-4" | Length "L-5" ① | Area 1 | Area 2 | Quantity Sq.Ft. ② |
|---|---|---|---|---|---|---|---|---|---|---|---|---|---|---|
| 1 | 1 | 140.52 | 164.41 | 7.0 | 42°04'02" | 95.52 | Ⓑ | 54.69 | | | 45.0 | 4298.4 | 1231.0 | 632.69 |
| | 2 | 195.21 | 228.60 | 7.0 | ↓ | ↓ | ↓ | ↓ | | | ↓ | ↓ | ↓ | 639.80 |
| | 3 | 195.21 | 228.60 | 5.0 | | | | | | | | | | 639.80 |
| | 4 | 140.52 | 181.41 | 5.0 | 42°04'02" | 95.52 | Ⓑ | 54.69 | | | 45.0 | 4298.4 | 1231.0 | 632.69 |
| | | | | | | | | | | | | | TOTAL- | 2544.90 |

① Average length
② Approximate only.

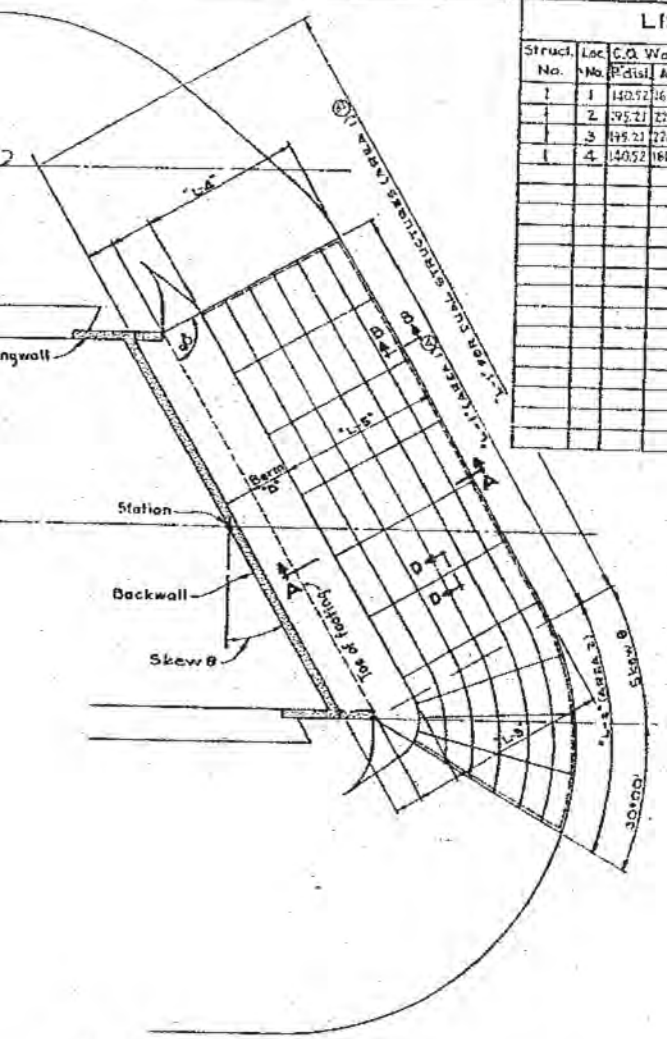


OVER 30°00' SKEW

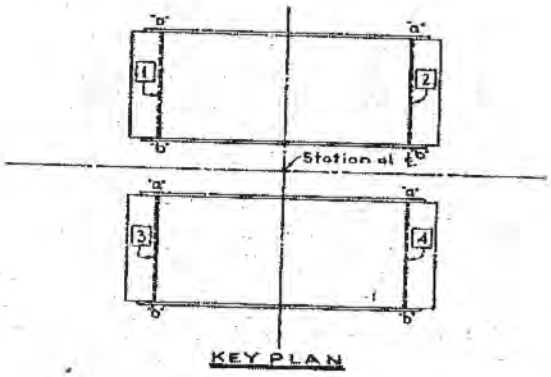


KEY PLAN

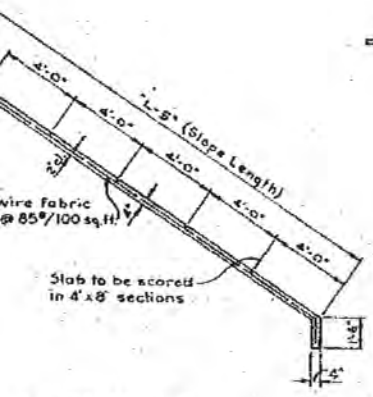


SECTION A-A

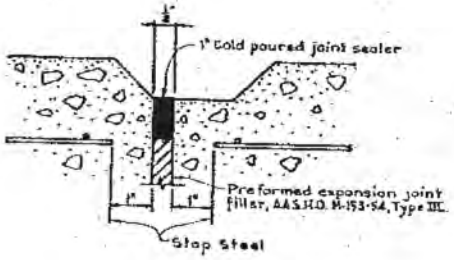


SECTION D-D

NOTE: Place vertical expansion joints at 40' maximum spacing.

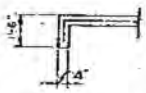


SECTION B-B

| No. | NAME OF STRUCTURE | Station at ℄ |
|---|---|---|
| 1 | LINDON U.P. & ST. RTE. 114 O'PASS | 501+90.62 |
| 2 | | |
| 3 | | |
| 4 | | |
| 5 | | |
| 6 | | |
| 7 | | |
| 8 | | |

UTAH STATE DEPARTMENT OF HIGHWAYS
SALT LAKE CITY, UTAH
STRUCTURES DIVISION

REINFORCED CONCRETE SLOPE PROTECTION

LEHI TO PROVO

| | | |
|---|---|---|
| DESIGNED BY: NAV | CHECKED BY: | I-15-6(122)270 PROJECT NUMBER |
| DRAWN BY: J.H.O. | CHECKED BY: | |
| QUANTITIES BY: J.H.O. | CHECKED BY: NAV | 501+90.62 STATION |
| APPROVAL RECOMMENDED BY: | GROUP LEADER | |
| APPROVED: DATE | CHIEF STRUCTURAL ENGR. | UTAH COUNTY |
| BR. NO. | DWG. NO. SP-2 | OF |

TO ACCOMPANY ~ C-353

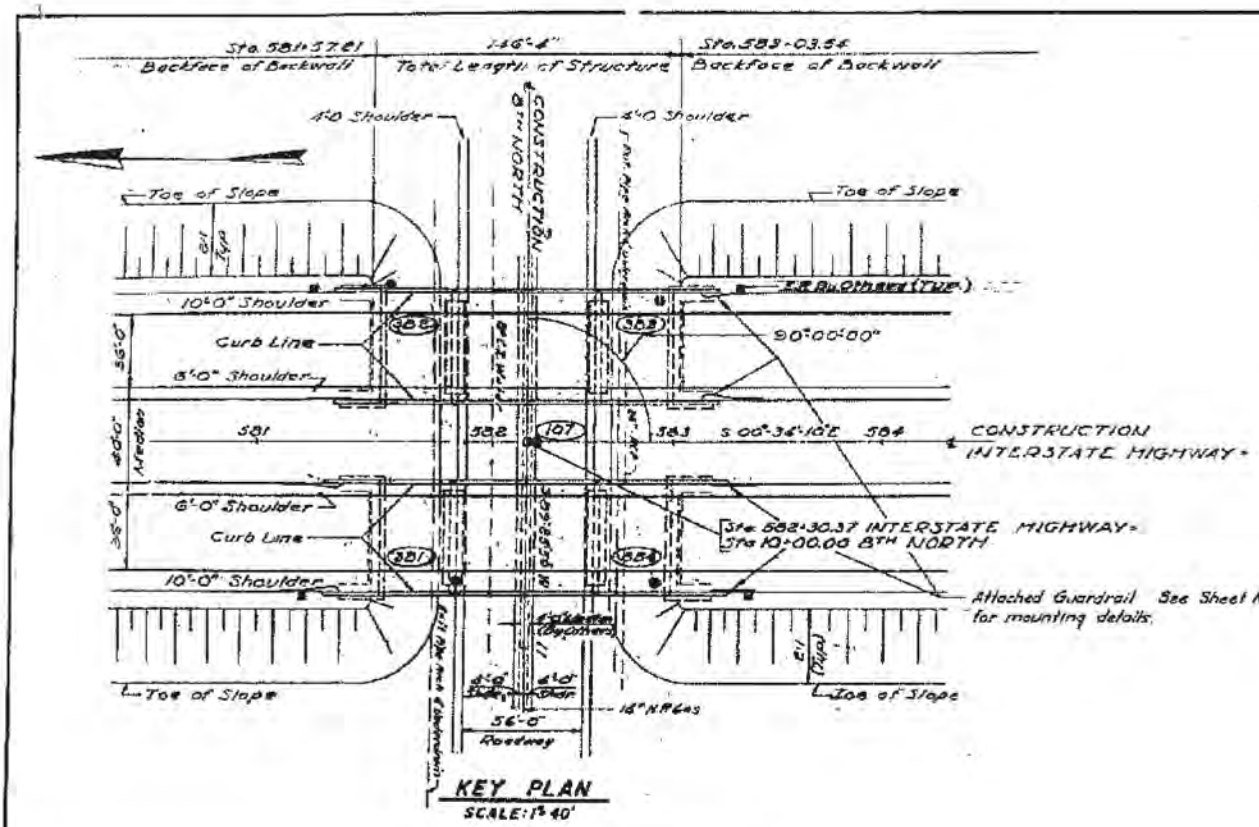


**FOR INFORMATION ONLY**

| ESTIMATE OF QUANTITIES | | | |
|---|---|---|---|
| NO. | ITEM | QUANTITY | |
| 1 | EXCAVATION FOR STRUCTURES UNCL | [illegible] Cu. Yds. | 1866.61 |
| 2 | IMPORTED BORROW | [illegible] Cu. Yds. | 1060.16 |
| 3 | CLASS A OVERHAUL | [illegible] Cu. Yds. | 3547.00 |
| 4 | GRANULAR BACKFILL | [illegible] Cu. Yds. | 1322.91 |
| 5 | CONCRETE CLASS "A" | [illegible] Cu. Yds. | 1429.65 |
| 6 | REINFORCING STEEL | [illegible] Lbs. | 217,322 |
| 7 | 6" PERF. A.C.M.P. UNDERDRAIN | [illegible] Lin. Ft. | 368 |
| 8 | PRESTRESSED CONCRETE BEAMS TYPE II 37'-9" LONG | 28 Ea. | |
| 9 | PRESTRESSED CONCRETE BEAMS TYPE III 37'-9" LONG | 8 Ea. | |
| 10 | PRESTRESSED CONCRETE BEAMS TYPE III 66'-6" LONG | 2 Ea. | |
| 11 | ALUMINUM GUARDRAIL (SINGLE RAIL) | 110 Lin. Ft. | |
| 12 | 3" RIGID STEEL CONDUIT | 380 Lin. Ft. | |
| 13 | FLAGGING | [illegible] Man Hr. | 385 |
| 14 | CONSTRUCTION SIGNS | [illegible] | |
| 1 | CONCRETE SLOPE PROTECTION | 1,375 Sq. Yds. | |

As Const.

DESIGN SPECIFICATIONS:
A.A.S.H.T.O. Standard Specifica
Thereto (See I.L.1581) For Prestressed

ALTERNATE DESIGN:
The Method Of Prestressing To
To All Requirements Specified, Or As N

CONSTRUCTION SPECIFICATIONS
Materials, Construction, And Wor
State Standard Specifications Fo
And Supplements Thereto Which A

LIVE LOAD:
HS20-S16-44 Interstate Alternate Lo

REINFORCEMENT:
All Reinforcing Steel Bars Sh
A.S.T.M. Designation A-15, And Shall

PRESTRESSED BEAM DATA:
Ultimate 28 Day Cylinder Strengt
Ultimate Cylinder Strength Of Co
Initial Tensioning Load Per Str
Ultimate Prestressing Steel Stre

HANDLING:
In The Handling Of Beams, They M
All Times And Must Be Picked Up O
Within The Beam. Disregard Of This

CONCRETE:
Class "A" Concrete And Type II Low Alk
Beams.

REINFORCEMENT COVER:
Reinforcement Shall Be Accurately
Concrete Covering Over The Reinforce
Concrete Against Earth & Contrac

CHAMFERS:
Exposed Concrete Of Substructur
Otherwise Noted, Edges Of Concrete
Fillets Unless Otherwise Noted. Expo
Chamfered.

FOUNDATIONS:
Foundations May Be Altered, If N
Construction.

DATUM:
All Elevations Refer To United Stat
BENCH MARK: Iron Pin At North East C
Bench Mark 25 Elevation 4652.03

SHOP DRAWING:
All Shop Drawings Shall Be Approve

DGN Files IP, PWIndex\16721\4433_F-13.01-Form\Forms
02-MAY-2005

| FED. ROAD DIST. NO. | STATE | FED. AID PROJ. NO. | FISCAL YEAR | SHEET NO. | TOTAL SHEETS |
|---|---|---|---|---|---|
| UT | UTAH | I-15-6491265 | POST WAR | | |

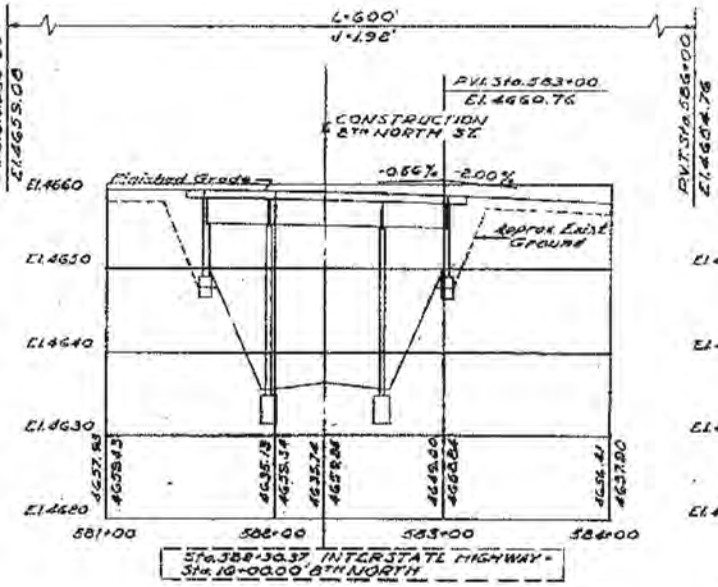


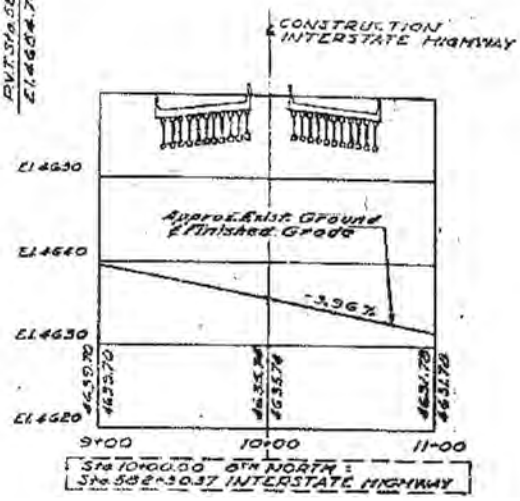


## INTERSTATE HIGHWAY PROFILE

SCALE: 1" = 10' VERT.
1" = 50' HOR.

## 8TH NORTH PROFILE

SCALE: 1" = 10' VERT.
1" = 50' HOR.

## GENERAL NOTES

tion: For Highway Bridges, 1957 Edition, And Supplements
Concrete Bridges And Typ. II & III A.R.S.H.O. Standard Beam Section.

Be Used Shall Be Optional With The Contractor, Subject
oted On These Plans.

manship Shall Be In Accordance With The
r Road And Bridge Construction, 1960 Edition
re In Effect At The Date Of Request For Bids.

ing In Accordance With The A.A.S.H.O. Specifications Of 1957

all Be Of New Billet Steel, Intermediate Grade Conforming To
Have Deformations Conforming To A.S.T.M. Designation A-305.

h Of Concrete 3,000 p.s.i.
crete At Time Of Prestress 2,000 p.s.i.
nd 18,000 lbs.
gth 350,000 p.s.i.

st Be Maintained In An Upright Position At
ly By Means Of Approved Devices Anchored
Requirement May Result In Collapse Of The Member

all Cement Shall Be Used Throughout, Except Prestressed

Placed In The Forms To Provide The Following
ment Unless Otherwise Specified: Abutments And Piers
o Above Ground - 3". Deck Concrete: All Cases - 1"

es Shall Have 1½" Chamfers And 1½" Fillets Unless
Deck And Sidewalks Shall Have ¾" Chamfers And ½"
ed Concrete Of Prestressed Beams Shall Have ½"

ecessary, To Suit Conditions Encountered In

es Coast And Geodetic Survey Mean Sea Level Datum Of 1934
orner Of 8th North And 12th West Intersection.

d Before Fabrication Of Steel.

## INDEX OF SHEETS

| SHEET NUMBER | DESCRIPTION |
|---|---|
| 1 | KEY PLAN & INDEX SHEET |
| 2 | DECK PLAN & ELEVATION |
| 3 | BORING LOGS |
| 4 | FOUNDATION PLAN |
| 5 | ABUTMENT NO. 1 & NO. 2 |
| 6 | ABUTMENT NO. 3 & NO. 4 |
| 7 | PIER NO. 1 & NO. 2 |
| 8 | PIER NO. 3 & NO. 4 |
| 9 | FRAMING PLAN |
| 10 & 11 | TRANSVERSE SECTIONS |
| | |
| 12 | CONCRETE DETAILS |
| 13 | REINFORCING SCHEDULE |
| | RAILING DETAILS (DRB-RD.ST-1) |
| | |
| | OVERHEAD LIGHTING DETAILS (DWG. NO. 87-6) |
| 15A | CONCRETE SLOPE PROTECTION |
| 15B | GUARDRAIL ATTACHMENT |

## KEY PLAN & INDEX SHEET

Rev. 7-18-60 DFA
Rev. 8-1-60 RJB

DESIGN AND DRAWING BY
WESTERN ENGINEERS, INC. AND
EDWARDS AND KELCEY
CONSULTING ENGINEERS

SUBMITTED BY [signature] CHIEF ENGINEER
UTAH ENGR. LIC. NO. 2164

REGISTERED PROFESSIONAL ENGINEER NO. 2164 E. R. BERTELLE

UTAH STATE ROAD COMMISSION
SALT LAKE CITY, UTAH
BRIDGE DEPARTMENT

SHEET 1 OF 13 SHEETS

OREM 800 NORTH INTERCHANGE
14'8"-4" O. TO O.
STA. 582+30.37 I-15-6 (VIA)
LEHI-PROVO UTAH COUNTY

DESIGNED BY [illegible] DATE [illegible]
DRAWN BY [illegible] DATE [illegible]
TRACED BY [illegible] DATE [illegible]
CHECKED BY [illegible] DATE [illegible]

No. 28-1-1 | Date 7-15-

STRUCTURE 3-6

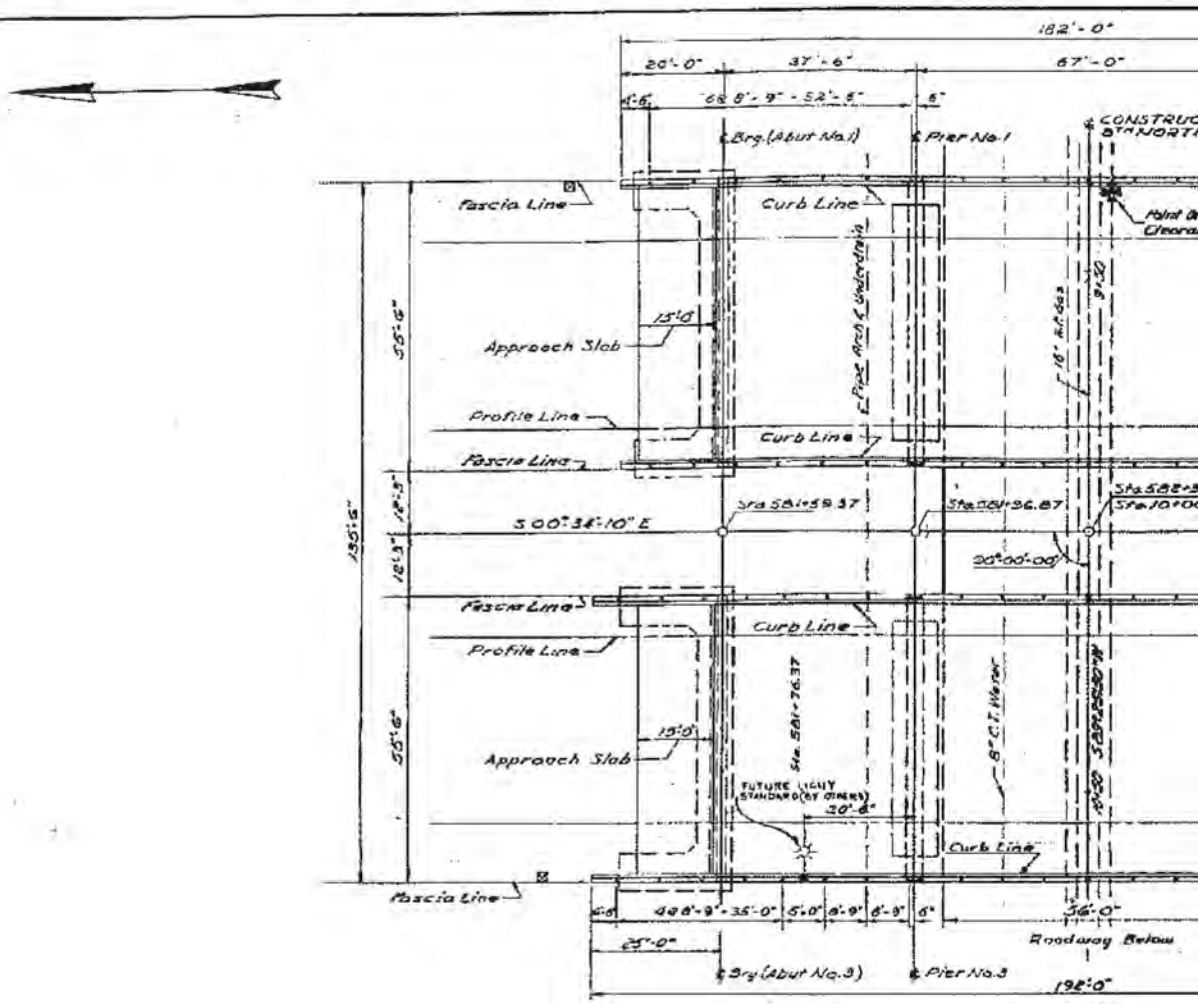


**PLAN**
SCALE: 1/16" = 1'-0"

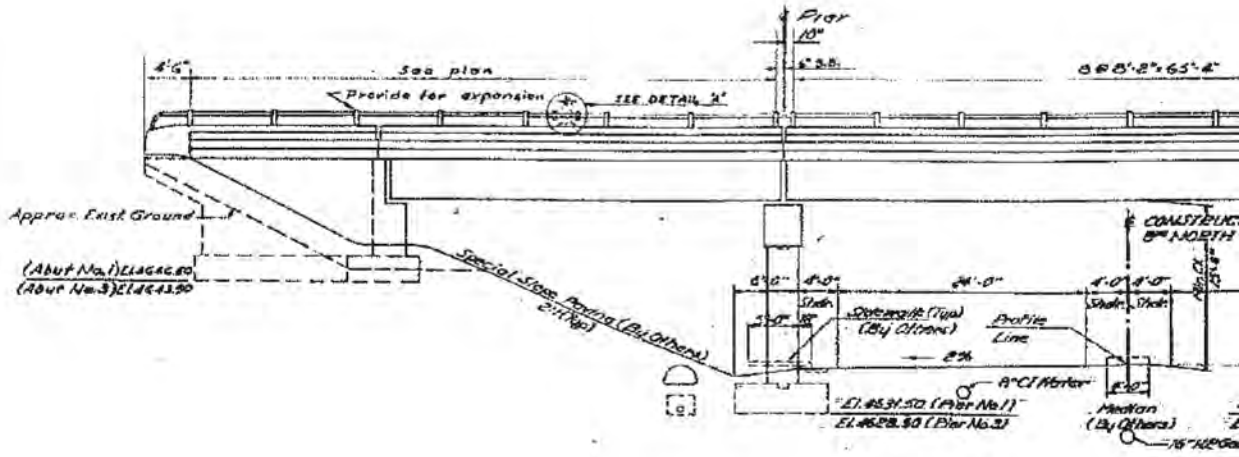


**ELEVATION**
SCALE: 1/16" = 1'-0"

| FED. ROAD PROJ. NO. | STATE | FED. AID PROJ. NO. | FISCAL YEAR | SHEET NO. | TOTAL SHEETS |
|---|---|---|---|---|---|
| UT | UTAH | I-15-6(9)263 | POST WAR | | |

**FOR INFORMATION ONLY**

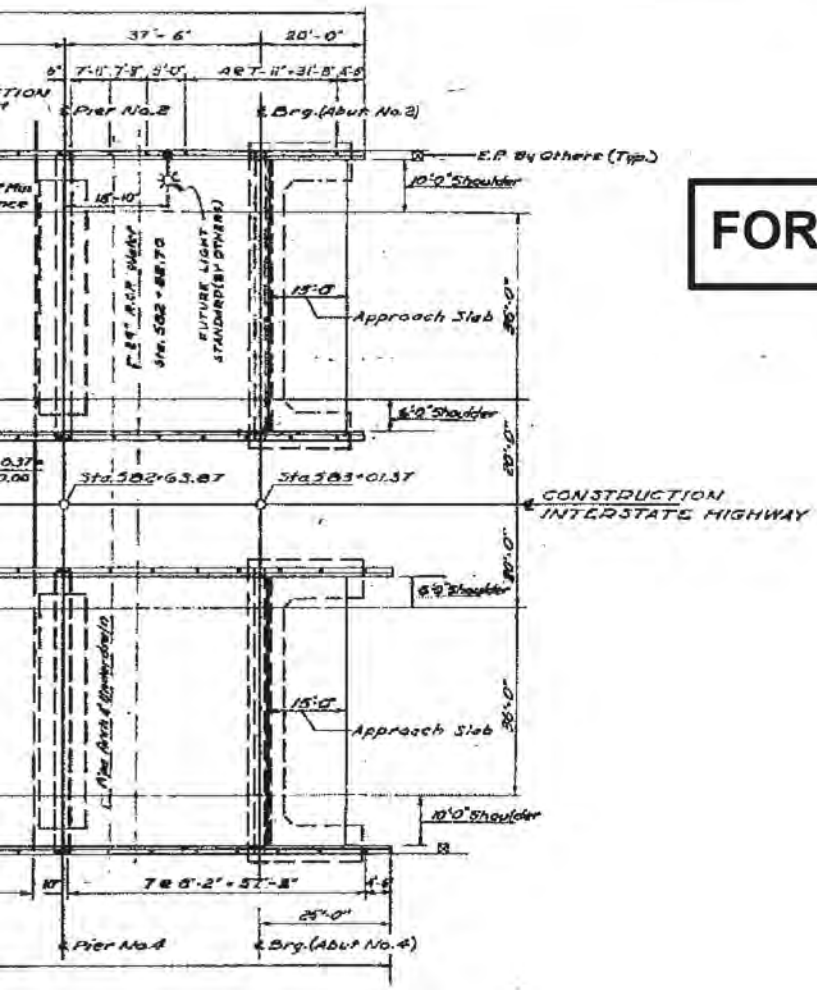


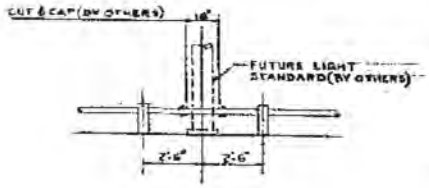


DETAIL "A"
SCALE 1 1/4" = 1'-0"

NOTES:
RAILING - FOR DETAILS SEE STANDARD DGS NO. ST-1

FOR JOINT FILLER DETAILS AT PARAPETS SEE SHT. 13 OF 13 SHTS.

UTILITIES - AS SHOWN ARE APPROXIMATELY LOCATED. EXACT LOCATION TO BE DETERMINED AT TIME OF CONSTRUCTION

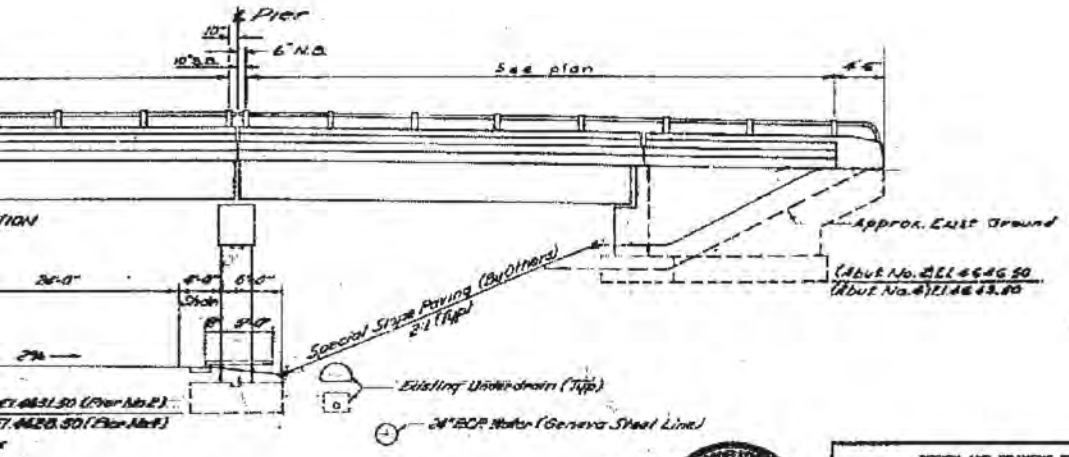


DECK PLAN & ELEVATION

SHEET 3 OF 18 SHEETS

UTAH STATE ROAD COMMISSION
SALT LAKE CITY, UTAH
BRIDGE DEPARTMENT

**OREM 800 NORTH INTERCHANGE**
146'-4" O. TO O.
STA 582 + 30.37
LEHI-PROVO
I-15-6(9)263
UTAH COUNTY

Designed by N.B. Date
Checked by T.Q.
Reviewed by
Approved by
Drawing No. 25-1-18 Sheet No. F-13

STRUCTURE 3-8

DESIGN AND DRAWING BY
WESTERN ENGINEERS, INC. AND
EDWARDS AND KELCEY
CONSULTING ENGINEERS

Submitted by
Utah Engr. Lic. No. 2164

REGISTERED PROFESSIONAL ENGINEER NO. 2164 J. R. BERYGLE STATE OF UTAH

| DATE | REVISION | BY |
|---|---|---|
| 2-21-61 | Light Stds. Relocated | C.E.W. |
| 7-18-60 | | D.R.A. |

# FOR INFORMATION ONLY

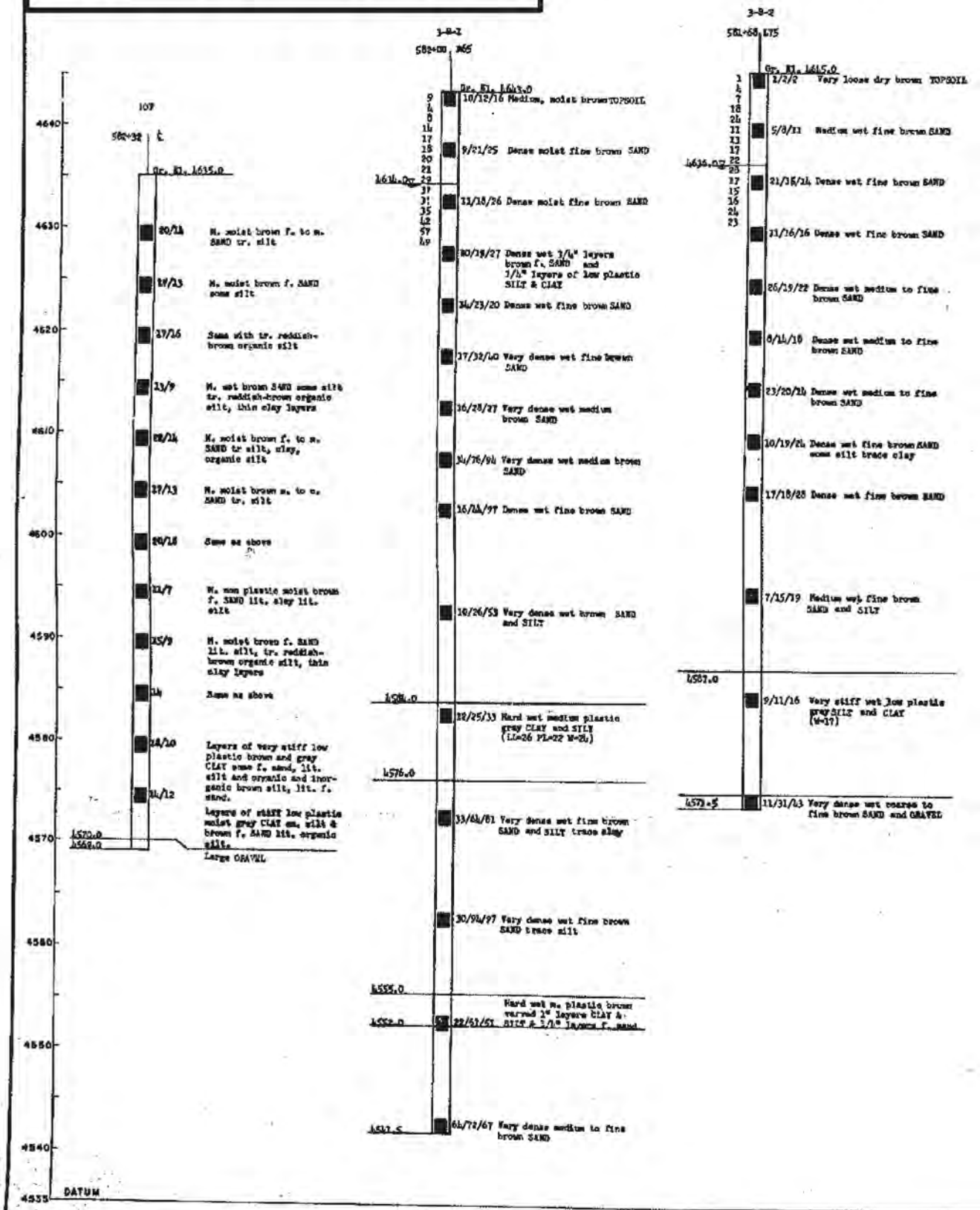


[redacted]

| FED. ROAD DIST. NO. | STATE | FED. AID PROJ. NO. | FISCAL YEAR | SHEET NO. | TOTAL SHEETS |
|---|---|---|---|---|---|
| UT | UTAH | I-15-6(9)265 | FOR 1969 | | |

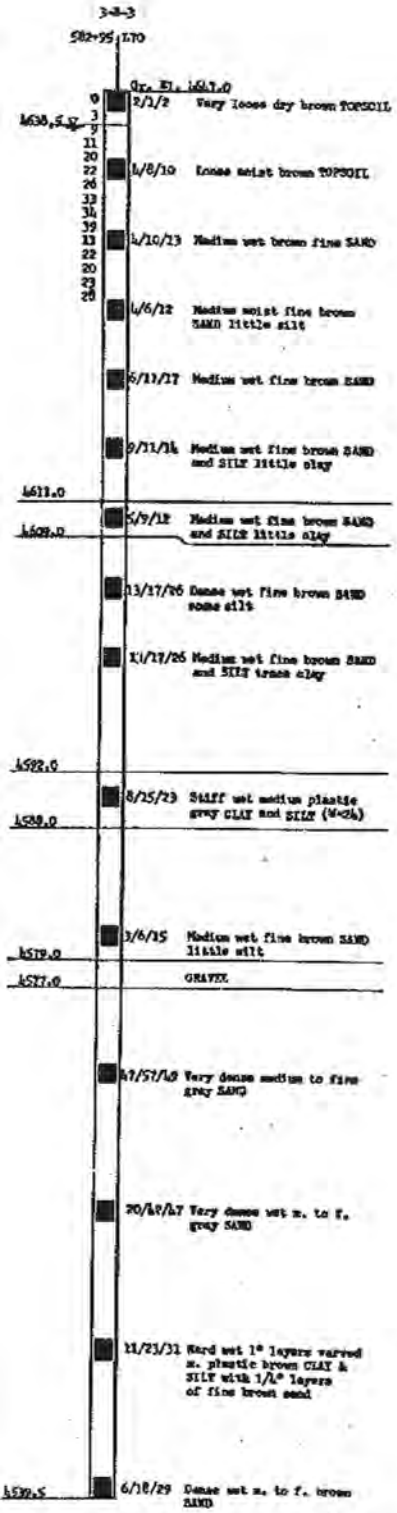


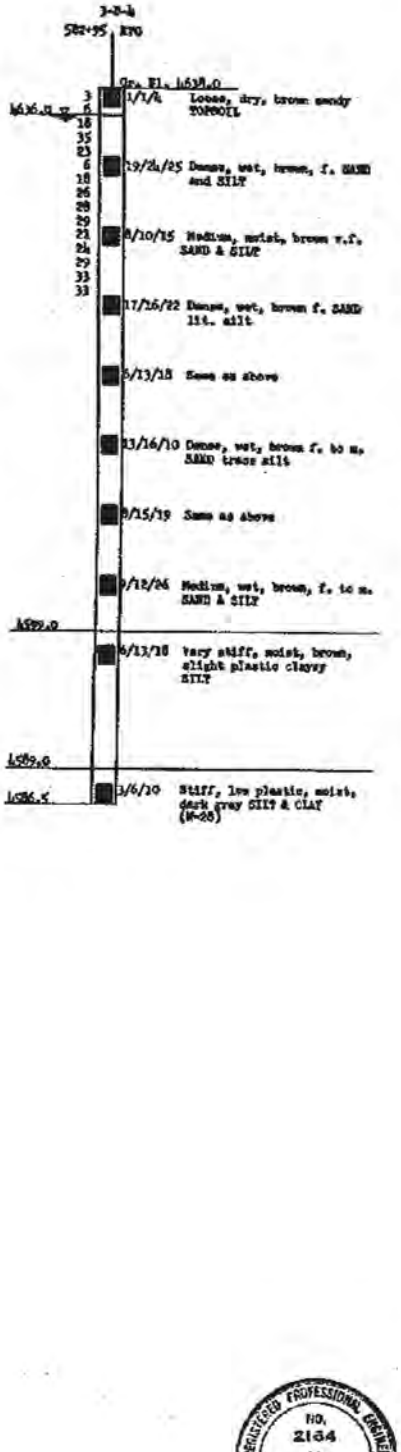


## LEGEND

Boring No. — 3-B-3

Interstate Station — 582+95 — 27 — Offset

Ground Elevation — Gr. El. 4652

Ground Water Table Elevation — 4557.1

Number of Blows Hard to drive casing 12 inches with 300 lb. hammer falling 2 ft. (Typical)

Strata Change Elevation (Typical) — 4550

Boring Advanced Without Casing

Location of Sample (Typical) — 4539

Bottom of Boring Elevation — 4535.5

Number of Blows Hard to drive 2-1/8" I.D. sampler with 140 lb. hammer falling 30 inches — 1st. 6 inches, 2nd. 6 inches, 3rd. 6 inches

| | | |
|---|---|---|
| 4560 | 3 7 9 | 2/4/5 Stiff m. plastic brown clay some silt-TOPSOIL |
| | 12 17 10 | 11/13/17 M. dense wet tan m. to c. SAND, some silt, tr. f. gravel |
| | 17 22 35 40 | 25/21/30 Dense wet tan m. to c. SAND, some gravel |
| | 36 43 86 99 106 | 7/6/8 Stiff, low plastic brown CLAY & SILT, tr. f. sand (LL = 40, PL = 20, W = 32) |
| | | 11/12/12 Very stiff, plastic gray CLAY & SILT, tr. f. sand (W = 35, qu = 12/ft.²) |
| | | 9/12/20 Very stiff varved plastic gray silty CLAY & f. silty SAND |

Visual soil description for each sample and results of classification tests, if any (Typical)

ABBREVIATIONS IF AND WHEN USED:

br. = brown
gr. = gray
org. = organic
f. = fine
v. f. = very fine
m. = medium
c. = coarse
sm. = some
tr. = trace
lit. = little
LL = Liquid Limit in %
PL = Plastic Limit in %
W = Natural Moisture Content in %
qu = Unconfined compression test from pocket penetrometer in T/ft.²

## BORING LOGS

SHEET 3 OF 13 SHEETS

UTAH STATE ROAD COMMISSION
SALT LAKE CITY, UTAH
BRIDGE DEPARTMENT

OREM 800 NORTH INTERCHANGE
148'-4" O. TO O.
STA. 582+30.37 I-15-6(9)265
LEHI-PROVO UTAH COUNTY

DESIGNED BY EKE
DRAWN BY EKE
CHECKED BY EKE
CHECKED BY EKE
DATE APR 1969
APPROVED D. H. Sorensen
SHEET NUMBER 13

No. 23-1-15 No. F-13

REGISTERED PROFESSIONAL ENGINEER
NO. 2134
J. F. MENVILLE
STATE OF UTAH

DESIGN AND DRAWING BY
WESTERN ENGINEERS, INC. AND
EDWARDS AND KELCEY
CONSULTING ENGINEERS

SUBMITTED BY J. F. Menville
CHIEF ENGINEER

UTAH ENGR. LIC. NO. 2134

STRUCTURE D-8

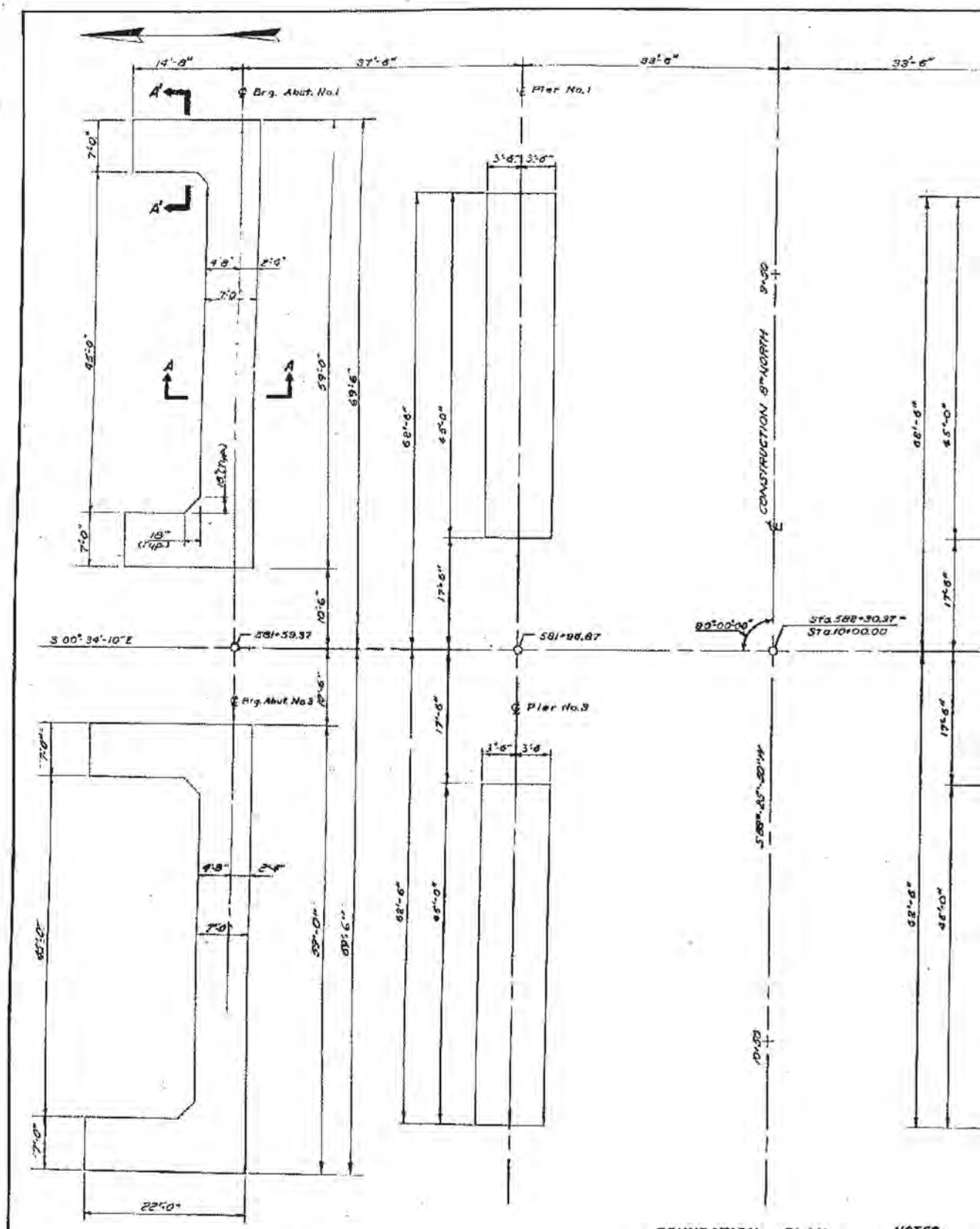


**FOUNDATION PLAN**

SCALE: 1/8" = 1'-0"

**NOTES:**

Max. comp

FOR INFORMAT

| FED. ROAD DIST. NO. | STATE | FED. AID PROJ. NO. | FISCAL YEAR | SHEET NO. | TOTAL SHEETS |
|---|---|---|---|---|---|
| UT | UTAH | I-15-6(9)265 | POST WAR | | |

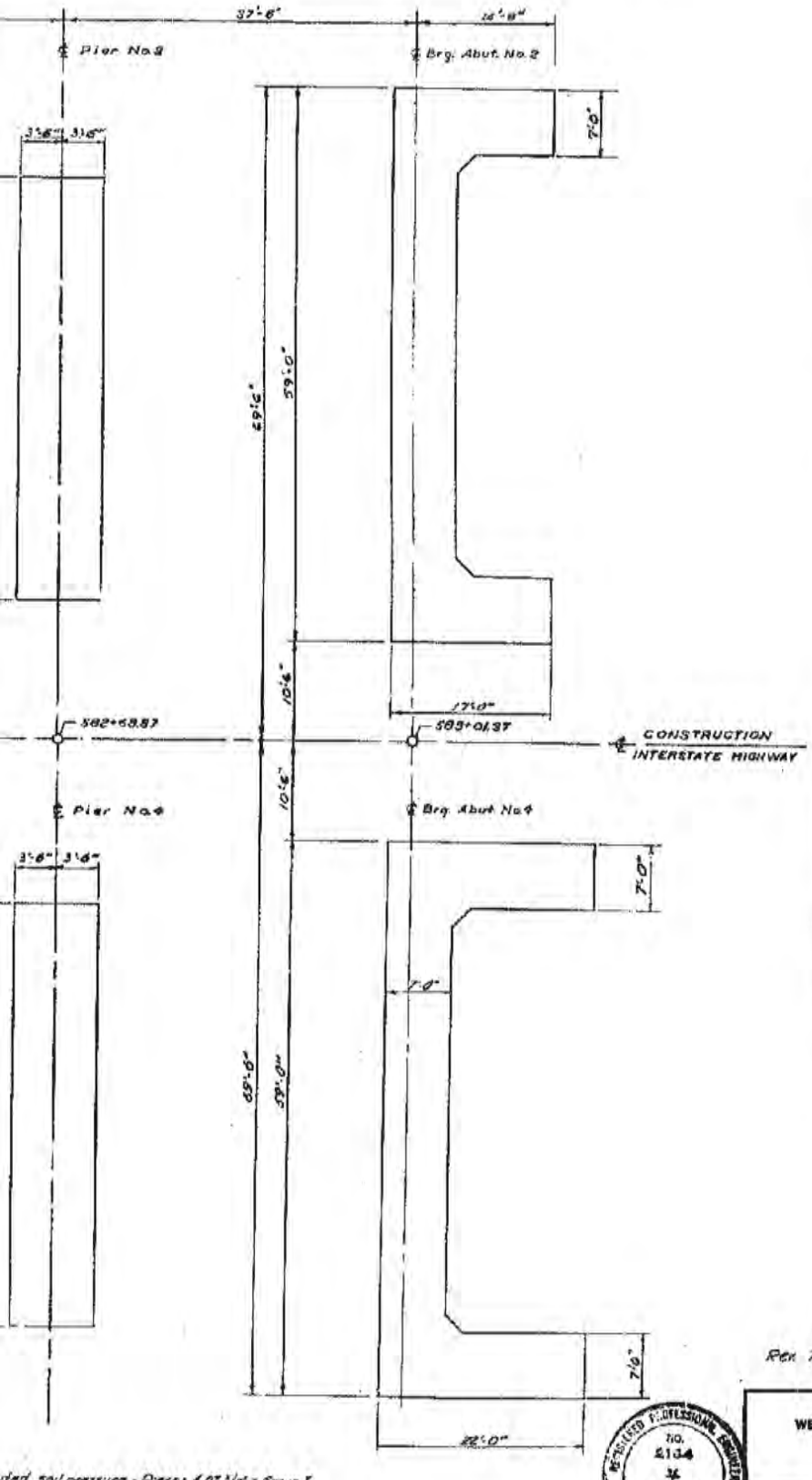


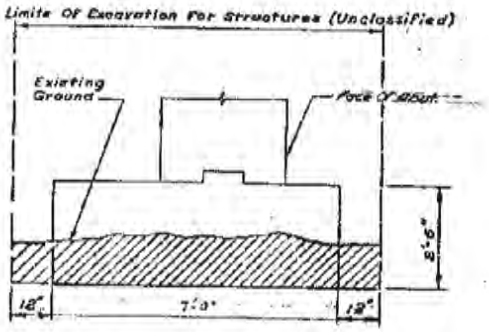


SECTION A-A
SCALE: 1/2" = 1'-0"

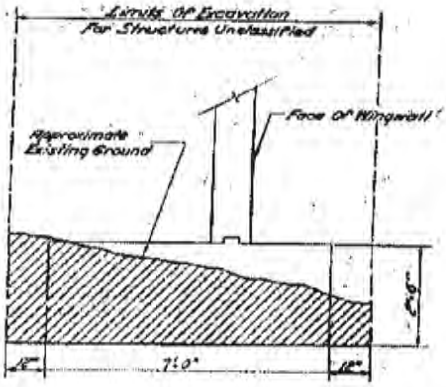


SECTION A'A'
SCALE: 1/2" = 1'-0"

FOUNDATION PLAN

Rev. 7-18-60 DFA

REGISTERED PROFESSIONAL ENGINEER NO. 2134 J. R. BERRILLE STATE OF UTAH

DESIGN AND DRAWING BY
WESTERN ENGINEERS, INC. AND
EDWARDS AND KELCEY
CONSULTING ENGINEERS

SUBMITTED BY: CHIEF ENGINEER
UTAH ENGR. LIC. NO. 1164

UTAH STATE ROAD COMMISSION
SALT LAKE CITY, UTAH
BRIDGE DEPARTMENT

OREM 800 NORTH INTERCHANGE
146-4 O. TO O.
STA. 582+30.37
LEHI-PROVO
SPRINGVILLE-SPANISH FORK
UTAH COUNTY

DESIGNED BY: M.A.
DRAWN BY: D.F.
TRACED BY: K.K.
CHECKED BY:
DATE: 23-2-15
PROJ. NO. F-

STRUCTURE 3-9

TION ONLY

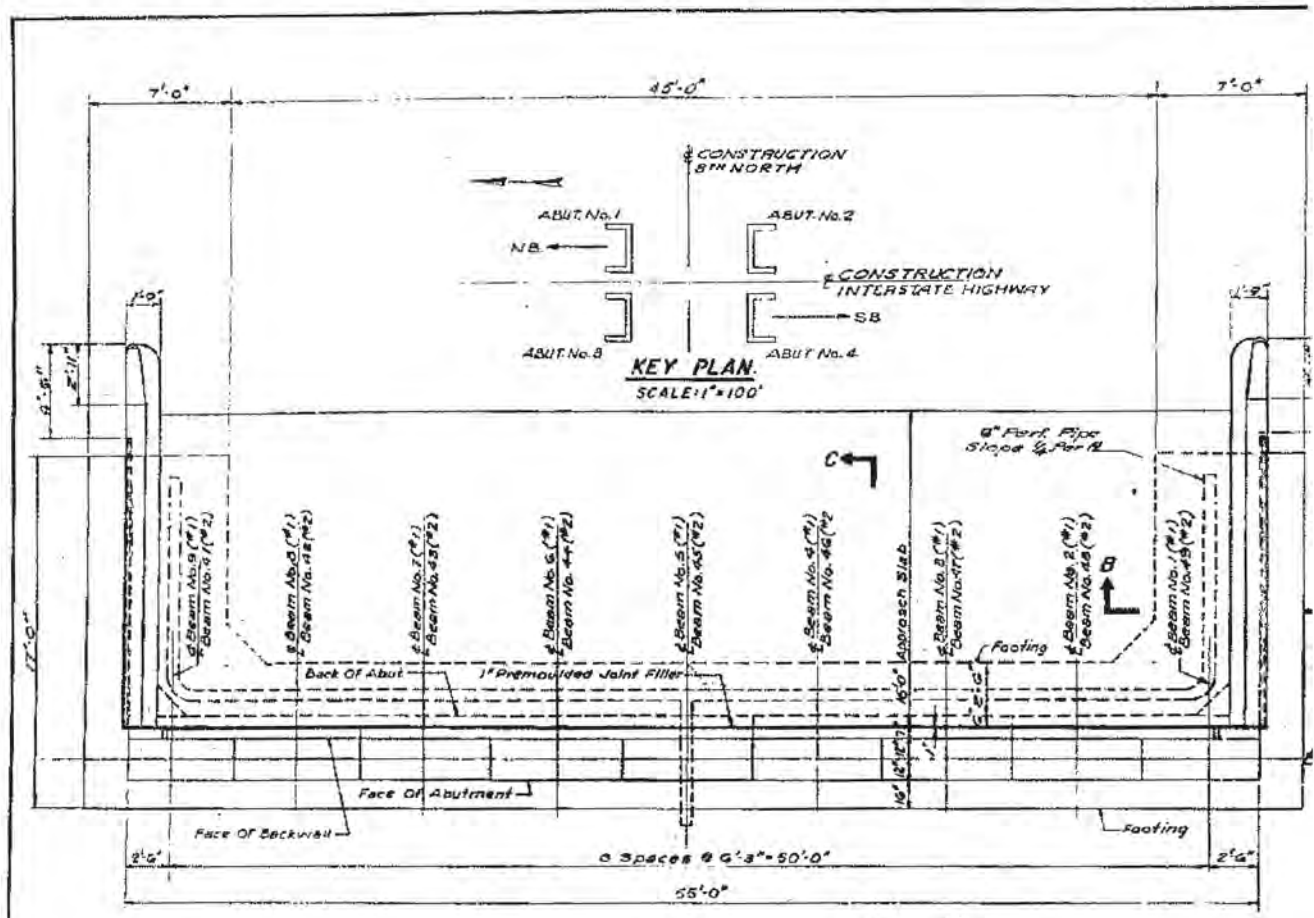


PLAN

SCALE: 1/8" = 1'-0"

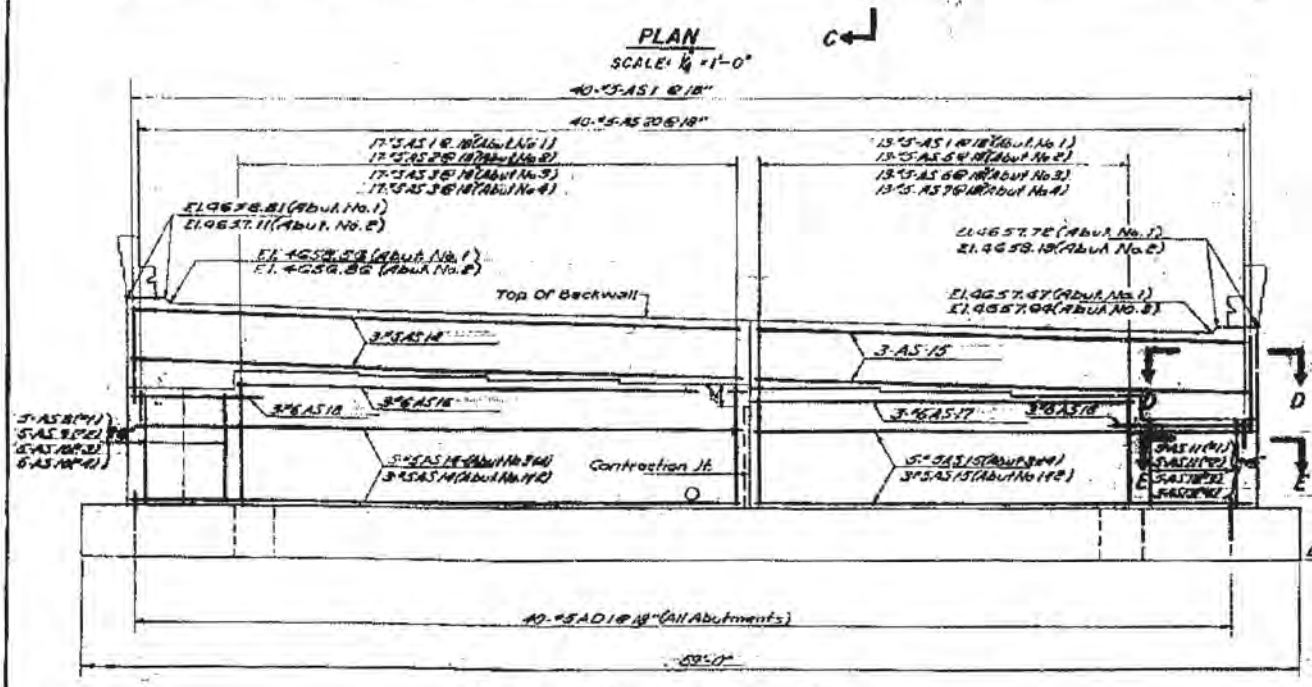


REINFORCEMENT FRONT FACE ELEVATION

SCALE: 1/8" = 1'-0"

FOR INFORMATI

| FED. ROADS DIST. NO. | STATE | FED. AID PROJ. NO. | FISCAL YEAR | SHEET NO. | TOTAL SHEETS |
|---|---|---|---|---|---|
| 8 | UTAH | I-15-6(9)265 | POST 1960 | | |

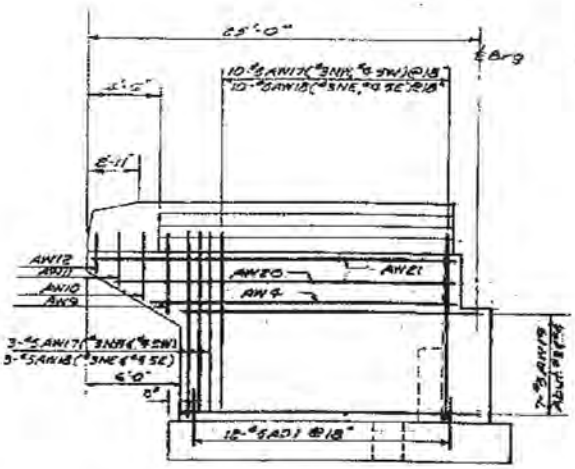


REINFORCEMENT FRONT FACE

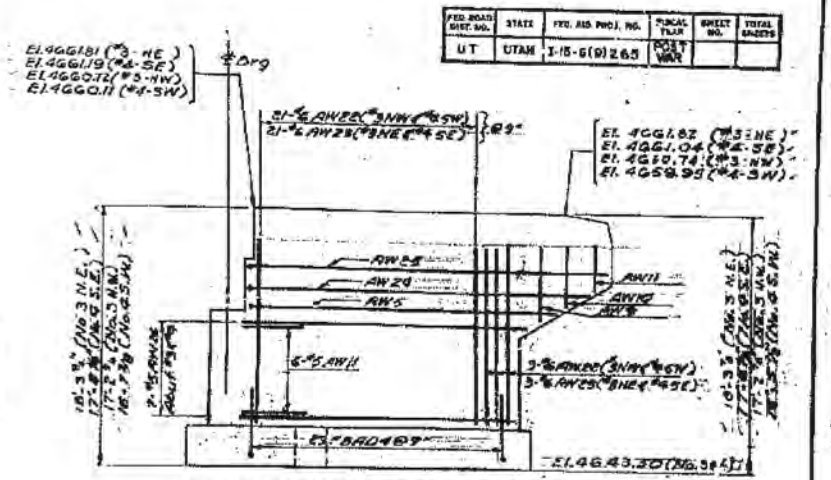


REINFORCEMENT BACK FACE

ELEVATION OF WINGWALLS - ABUTMENTS NO.3 & NO.4

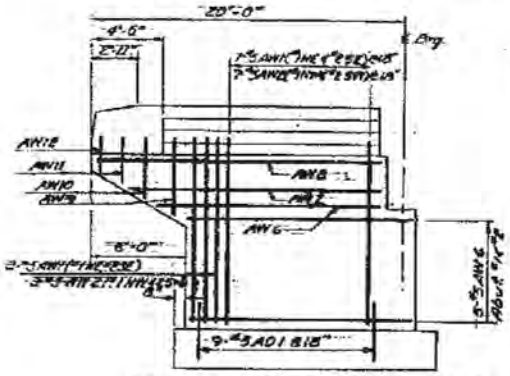


REINFORCEMENT FRONT FACE

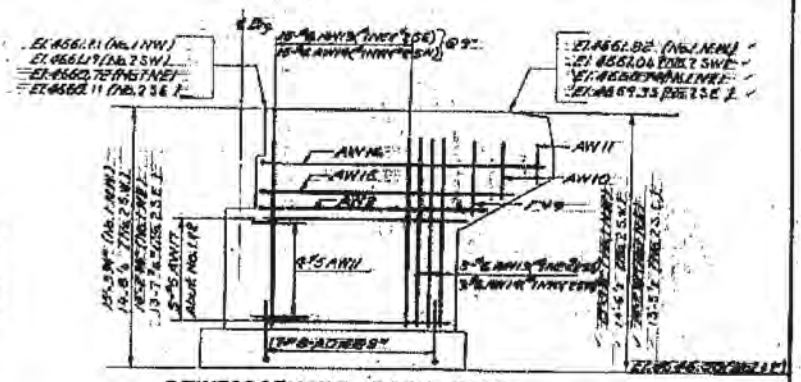


REINFORCEMENT BACK FACE

ELEVATION OF WINGWALLS - ABUTMENTS NO.1 & NO.2

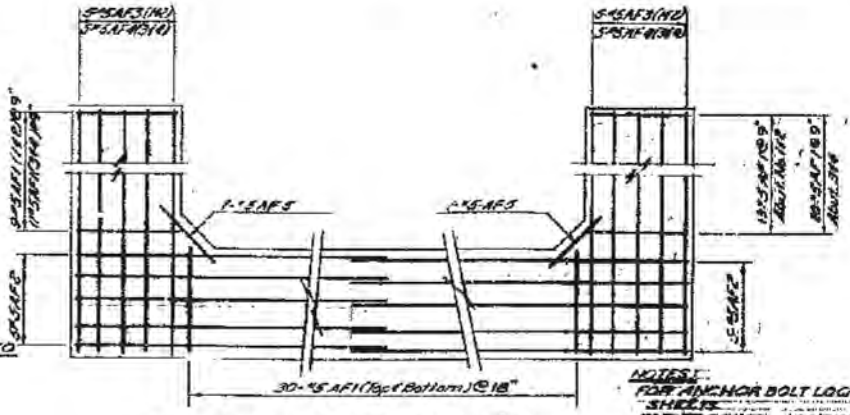


REINFORCEMENT TO BE PLACED TO AVOID OBSTRUCTIONS.

REINFORCEMENT BOTTOM REINFORCEMENT TOP

PLAN OF FOOTING

SCALE: 3/16" = 1'-0"

| BEAM NO. | BEAM ELEVATION ABUT. NO. 1 | BEAM NO. | BEAM ELEVATION ABUT. NO. 2 |
|---|---|---|---|
| 1 | 4659.15 | 1 | 4659.15 |
| 2 | 4659.67 | 2 | 4659.07 |
| 3 | 4658.80 | 3 | 4658.20 |
| 4 | 4658.93 | 4 | 4658.33 |
| 5 | 4659.06 | 5 | 4658.46 |
| 6 | 4659.19 | 6 | 4658.59 |
| 7 | 4659.32 | 7 | 4658.72 |
| 8 | 4659.45 | 8 | 4658.85 |
| 9 | 4659.58 | 9 | 4658.98 |

ABUTMENTS NO.1 & NO.2

NOTES:
FOR ANCHOR BOLT LOCATION SEE SHEET 6 OF 13 SHEETS
FOR FOOTING LOCATION PLAN SEE SHEET 6 OF 13 SHEETS
FOR SECTIONS B-B, C-C, D-D, E-E AND CONTRACTION JOINT DETAIL SEE SHEET 6 OF 13 SHEETS

SHEET 8 OF 13 SHEETS

UTAH STATE ROAD COMMISSION
SALT LAKE CITY, UTAH
BRIDGE DEPARTMENT

OREM 800 NORTH INTERCHANGE
148'-4" O. TO O.
STA 582+30.37
LEHI-PROVO
UTAH COUNTY

DESIGN AND DRAWING BY
WESTERN ENGINEERS, INC. AND
EDWARDS AND KELCEY
CONSULTING ENGINEERS

SUBMITTED BY J. R. Newville CHIEF ENGINEER
UTAH ENGR. LIC. NO. 2164

PROFESSIONAL ENGINEER NO. 2164 J. R. NEWVILLE STATE OF UTAH

DWG. No. 26-1-15
DWG. No. F-13

STRUCTURE: 3-8

ON ONLY

Rev. 7-18-60 DFA

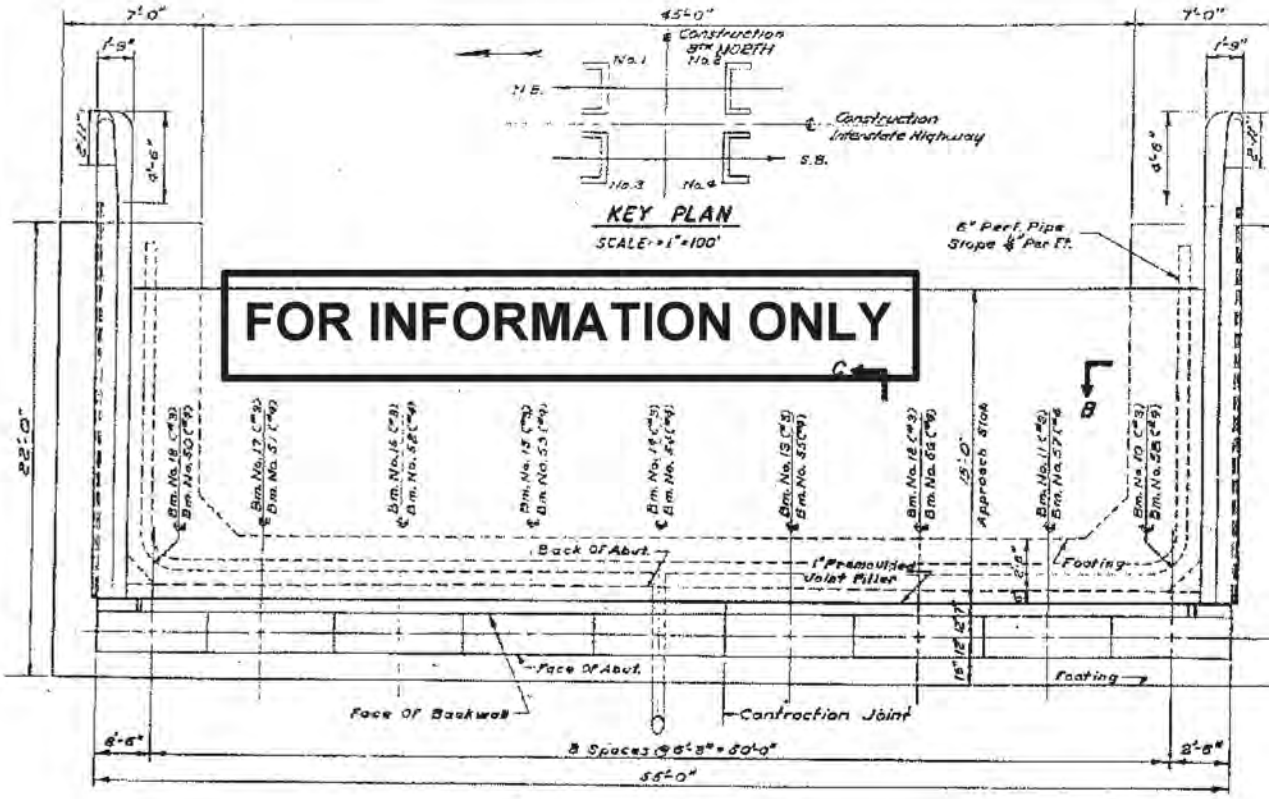


PLAN
SCALE: 1/16" = 1'-0"

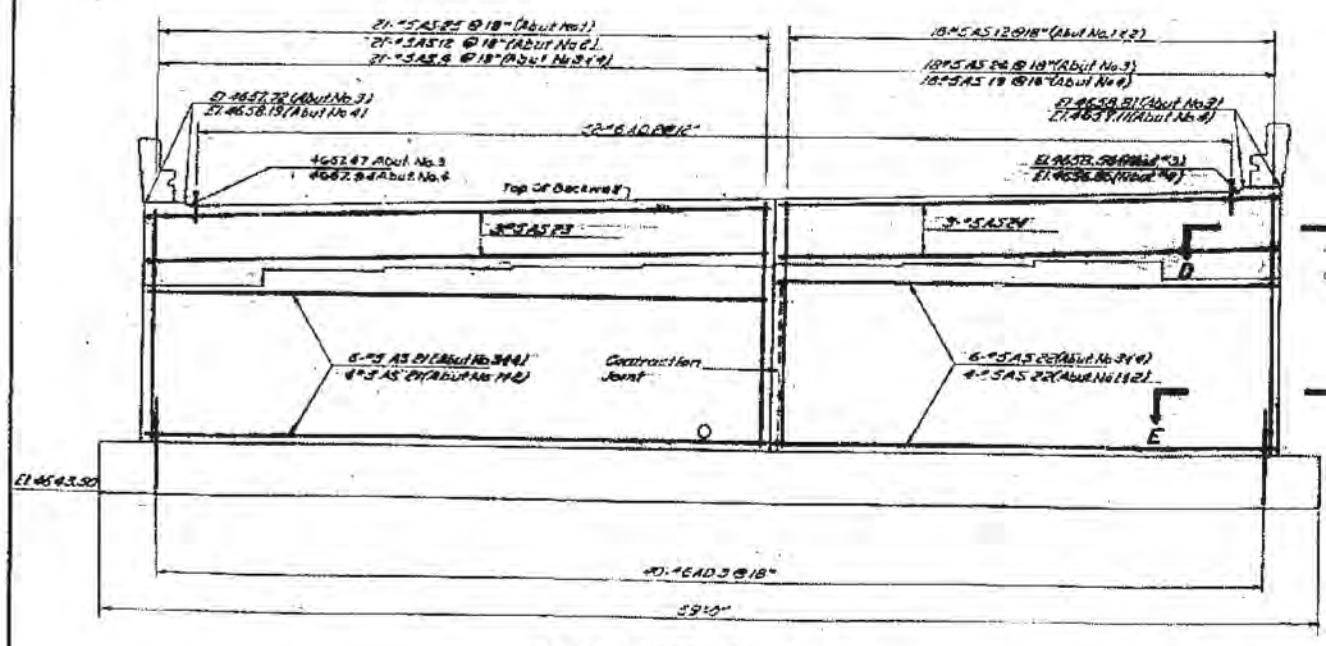


REINFORCEMENT BACK FACE
ELEVATION
SCALE: 1/16" = 1'-0"

NOTES:
For Footing Locat
See Sheet 4 Of 13
For Wingwall E
Reinforcement S
Reinforcement
Obstructions

| FED. ROAD DIST. NO. | STATE | FED. AID PROJ. NO. | FISCAL YEAR | SHEET NO. | TOTAL SHEETS |
|---|---|---|---|---|---|
| UT | UTAH | I-15-6(9) 265 | POST WAR | | |

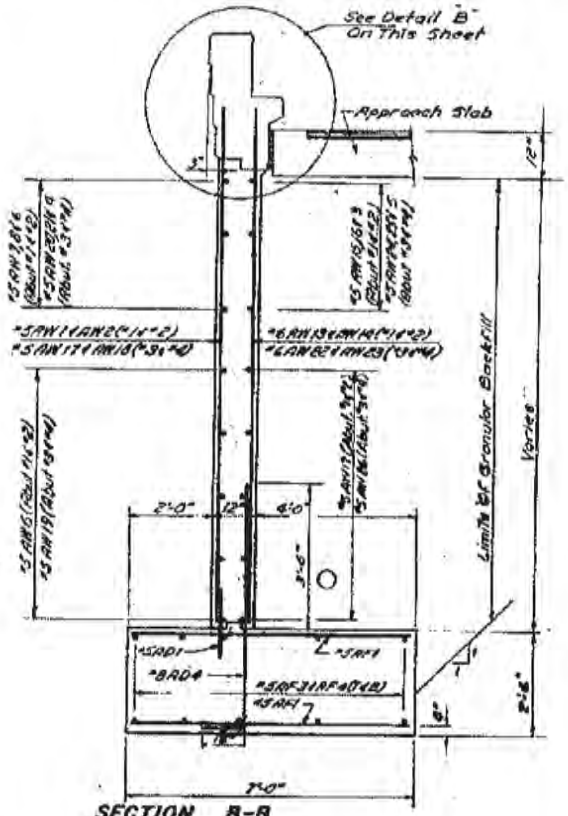


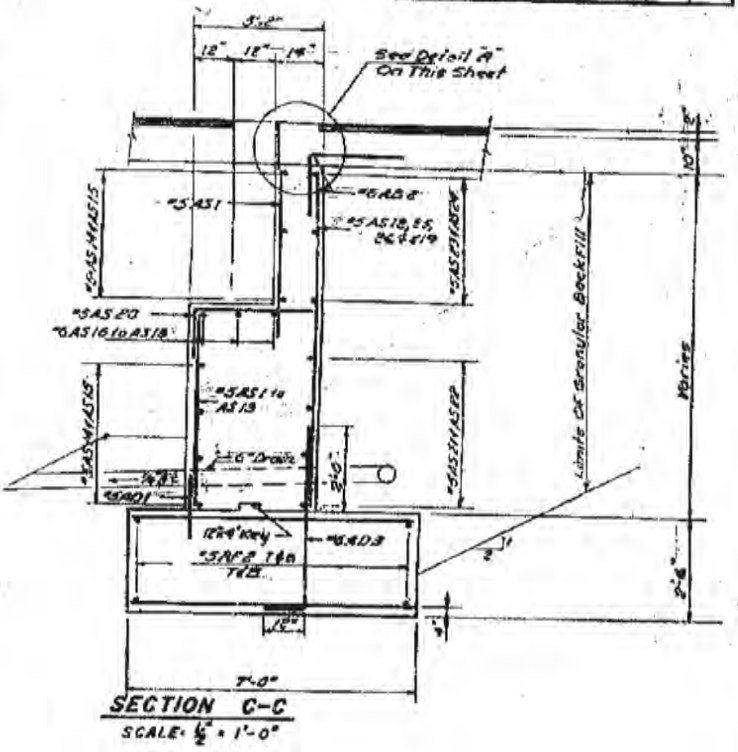


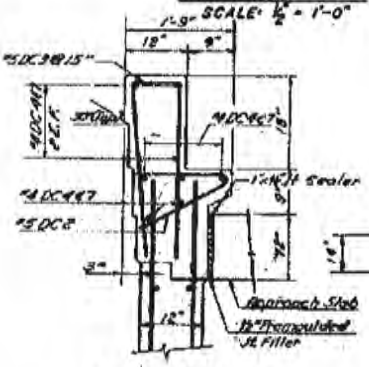


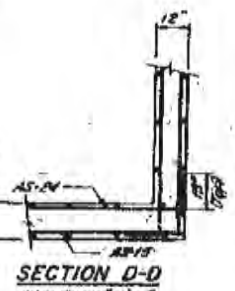


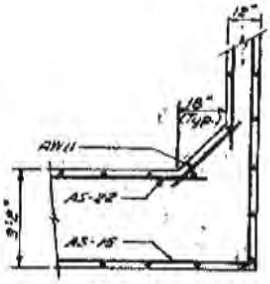


SOUTHBOUND ROADWAY

| BEAM NO. | ELEVATION ABUT. NO. 3 | BEAM NO. | ELEVATION ABUT. NO. 4 |
|---|---|---|---|
| 10 | [illegible] | 60 | [illegible] |
| 11 | [illegible] | 57 | [illegible] |
| 12 | [illegible] | 54 | [illegible] |
| 13 | [illegible] | 51 | [illegible] |
| 14 | [illegible] | 54 | [illegible] |
| 15 | [illegible] | 57 | [illegible] |
| 16 | [illegible] | 60 | [illegible] |
| 17 | [illegible] | 63 | [illegible] |
| 18 | [illegible] | 66 | [illegible] |

ABUTMENTS NO. 3 & NO. 4

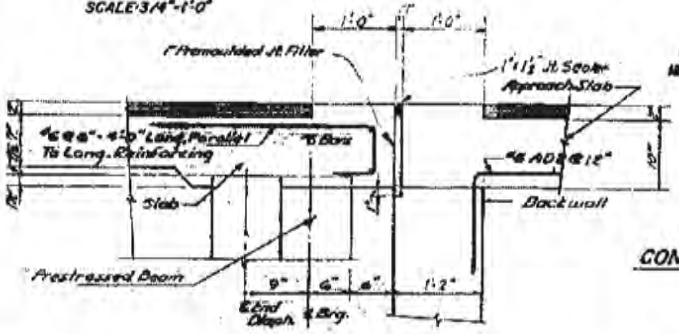


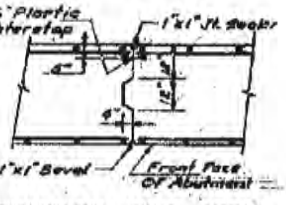


Rev. 7-18-60 DFA

DESIGN AND DRAWING BY
WESTERN ENGINEERS, INC. AND
EDWARDS AND KELCEY
CONSULTING ENGINEERS

SUBMITTED BY [signature] CHIEF ENGINEER
UTAH ENGR. LIC. NO. 2164

REGISTERED PROFESSIONAL ENGINEER NO. 2164 J. R. SCHWALB STATE OF UTAH

UTAH STATE ROAD COMMISSION
SALT LAKE CITY, UTAH
BRIDGE DEPARTMENT

OREM 800 NORTH INTERCHANGE
146'-4" O. TO O.
STA. 582+30.57 LEHI-PROVO
STA. 582+E (9) 785 UTAH COUNTY

DESIGNED BY J.E.B.
DRAWN BY A.E.
TRACED BY
CHECKED BY

SHEET 6 OF 13 SHEETS

No. 28-318
No. F-13

STRUCTURE 3-8

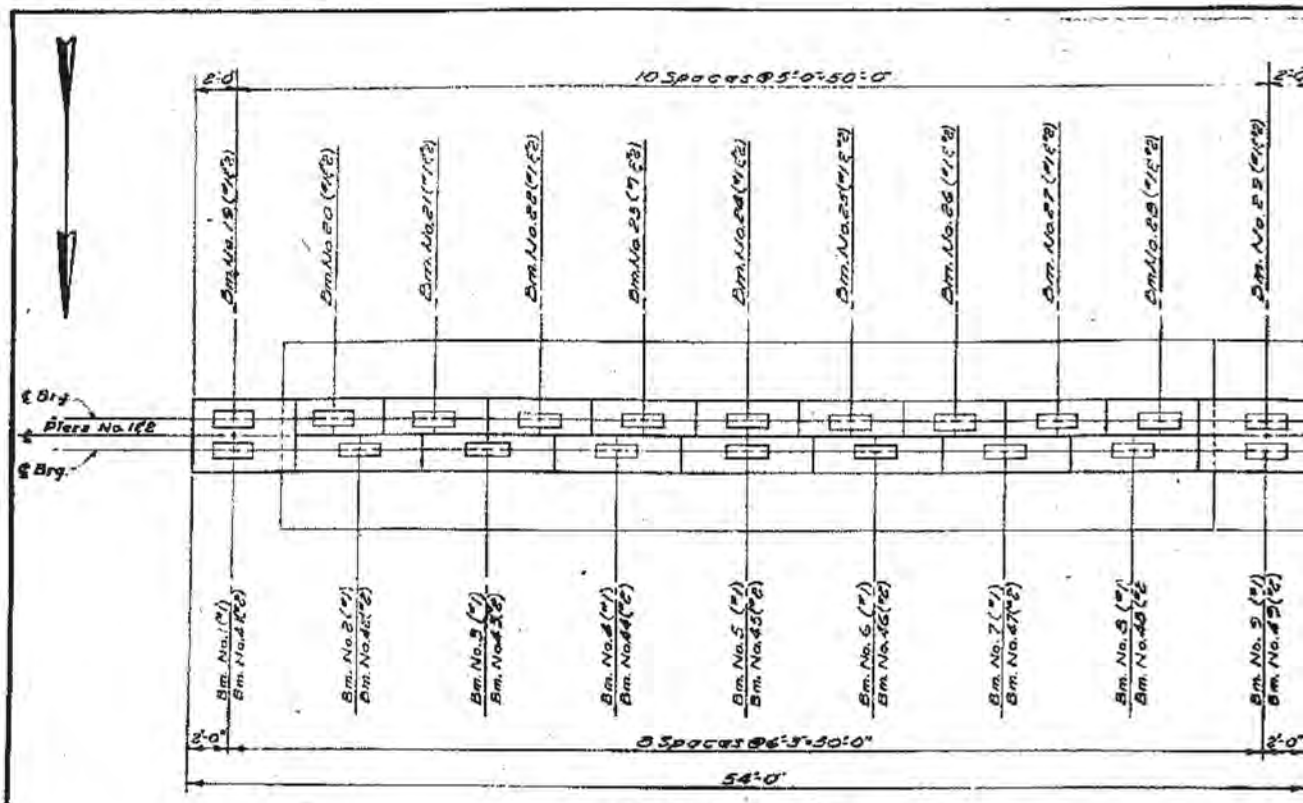


**PLAN — PIER NO. 1**
**PIER NO. 2 SIMILAR — OPPOSITE HAND**
SCALE: 1/8" = 1'-0"

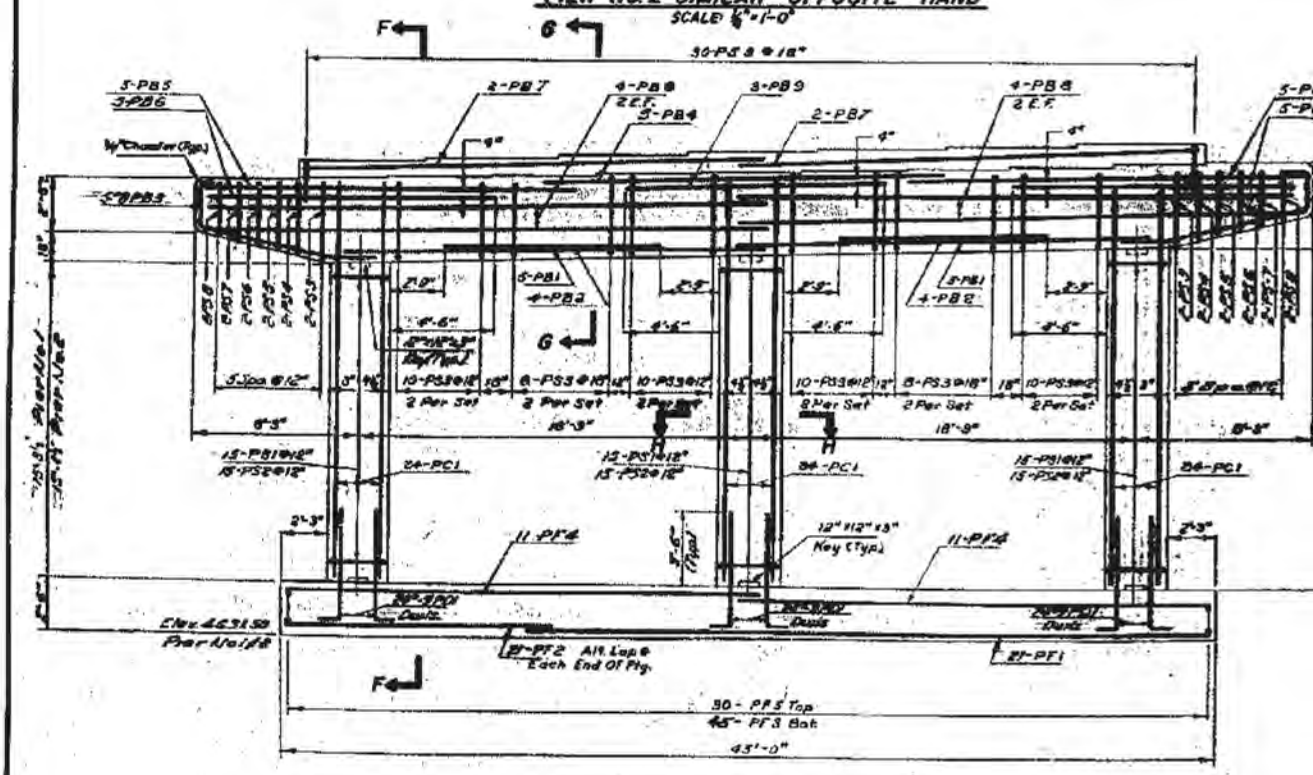


**ELEVATION — PIER NO. 1**
**PIER NO. 2 SIMILAR — OPPOSITE HAND**
SCALE: 1/8" = 1'-0"

| FED. ROAD DIST. NO. | STATE | FED. AID PROJ. NO. | FISCAL YEAR | SHEET NO. | TOTAL SHEETS |
|---|---|---|---|---|---|
| UT | UTAH | I-15-6(9)263 | POST WAR | | |

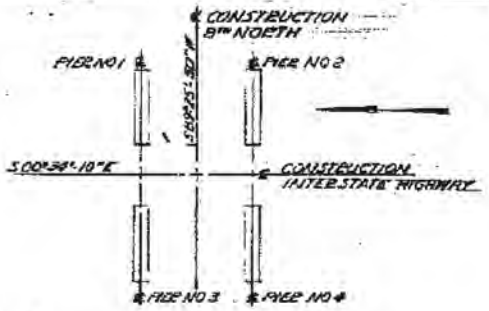


**KEY PLAN**
SCALE 1" - 50

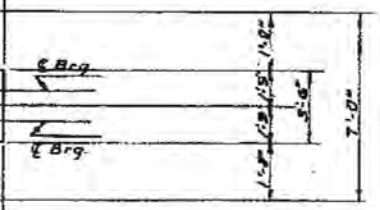


Note:
All beam seat bearing areas on piers and abutments shall be poured high and rubbed or ground to the grades shown within a tolerance of ± 1/8 inch. Finished bearing areas must be level and smooth so as to provide even bearing over the entire area of the elastomeric bearing pad. High or low spots will not be permitted.

**FOR INFORMATION ONLY**

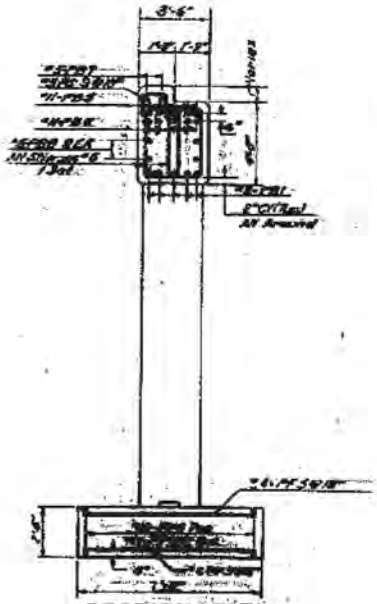

**SECTION F-F**
SCALE: 1/4" = 1'-0"

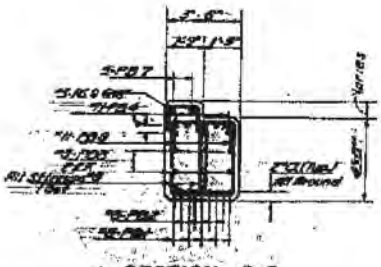

**SECTION G-G**
SCALE: 1/4" = 1'-0"

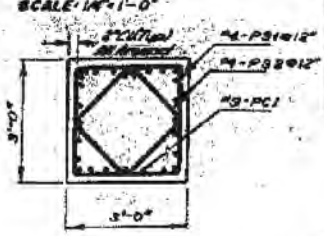


**SECTION H-H (TYP)**
SCALE: 1/2" = 1'-0"

NORTHBOUND ROADWAY

| BEAM NO. | ELEVATION PIER NO.1 | BEAM NO. | ELEVATION PIER NO.2 |
|---|---|---|---|
| 1 | 4653.71 | 18 | 4658.43 |
| 2 | 4654.79 | 19 | 4658.54 |
| 3 | 4654.78 | 20 | 4658.64 |
| 4 | 4654.85 | 21 | 4658.75 |
| 5 | 4654.94 | 22 | 4658.85 |
| 6 | 4655.11 | 23 | 4658.96 |
| 7 | 4655.25 | 24 | 4659.06 |
| 8 | 4655.38 | 25 | 4659.16 |
| 9 | 4655.75 | 26 | 4659.27 |
| 10 | 4655.70 | 27 | 4659.37 |
| 20 | 4656.31 | 28 | 4659.48 |
| 21 | 4656.91 | 41 | 4659.48 |
| 22 | 4656.61 | 42 | 4659.38 |
| 23 | 4657.11 | 43 | 4659.18 |
| 24 | 4657.11 | 44 | 4659.56 |
| 25 | 4657.33 | 45 | 4659.69 |
| 26 | 4657.43 | 46 | 4659.59 |
| 27 | 4657.53 | 47 | 4659.95 |
| 28 | 4657.64 | 48 | 4660.04 |
| 29 | 4657.74 | 49 | 4660.14 |

**PIERS NO.1 & NO.2**

SHEET 7 OF 18 SHEETS

Rev. 7-18-60 DFA

DESIGN AND DRAWING BY
WESTERN ENGINEERS, INC. AND
EDWARDS AND KELCEY
CONSULTING ENGINEERS

SUBMITTED BY
UTAH ENGR. LIC. NO. 2164

UTAH STATE ROAD COMMISSION
SALT LAKE CITY, UTAH
BRIDGE DEPARTMENT

**OREM 800 NORTH INTERCHANGE**
146'-4" O. TO O.
STA. 662+30.37
LEHI-PROVO
UTAH COUNTY

DRAWN BY
DESIGNED BY
CHECKED BY

No. 25-1-16
No. F-13

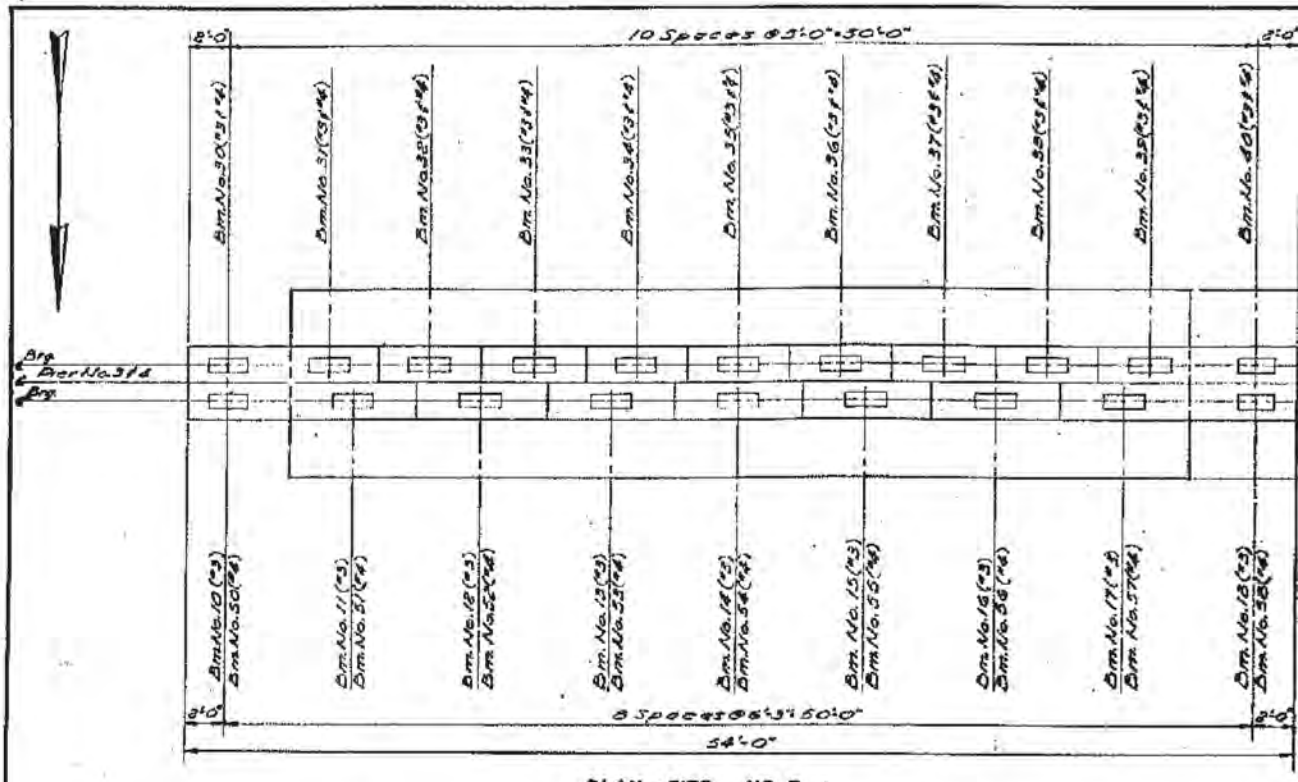


**PLAN — PIER NO. 3**
**PIER NO. 4 SIMILAR — OPPOSITE HAND**
SCALE: 1/4" = 1'-0"

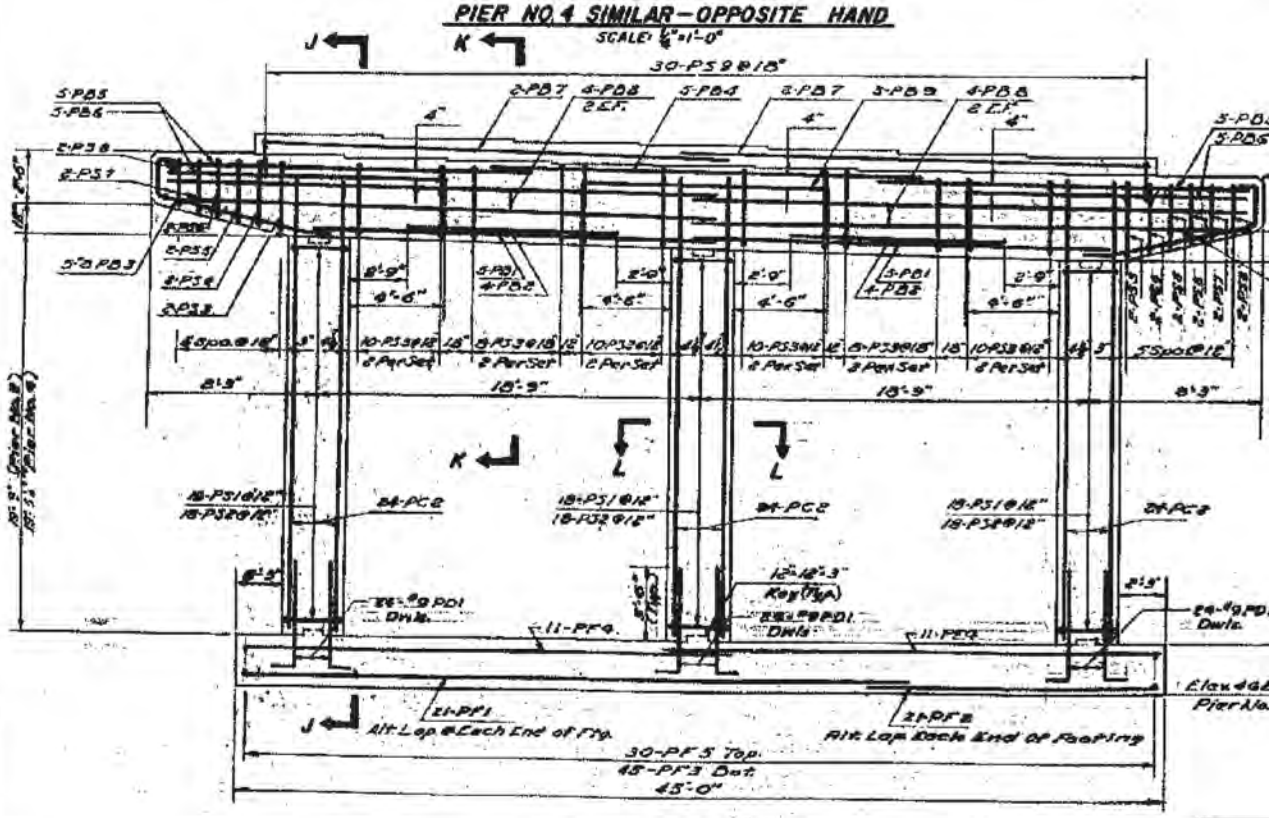


**ELEVATION — PIER NO. 3**
**PIER NO. 4 SIMILAR — OPPOSITE HAND**
SCALE: 1/4" = 1'-0"

FC

| FED. ROAD DIST. NO. | STATE | FED. AID PROJ. NO. | FISCAL YEAR | SHEET NO. | TOTAL SHEETS |
|---|---|---|---|---|---|
| UT | UTAH | I-15-8(91)265 | [illegible] | | |

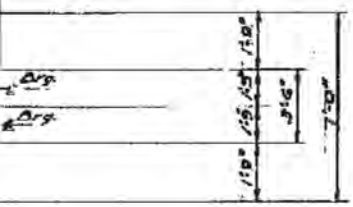

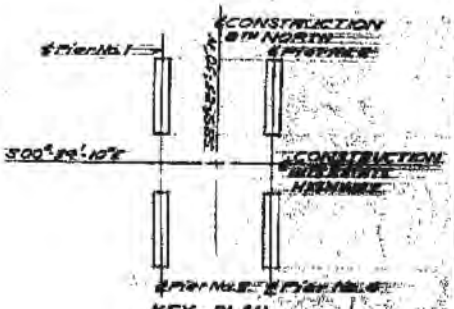


KEY PLAN
SCALE 1"=50'

SOUTHBOUND ROADWAY

| BEAM NO. | ELEVATION PIER NO.3 | BEAM NO. | ELEVATION PIER NO.4 |
|---|---|---|---|
| 10 | 4654.75 | 30 | [illegible] |
| 11 | 4655.34 | 31 | 4656.37 |
| 12 | 4655.55 | 32 | [illegible] |
| 13 | 4655.11 | 33 | [illegible] |
| 14 | 4654.99 | 34 | 4661.06 |
| 15 | 4654.55 | 35 | [illegible] |
| 16 | 4654.72 | 36 | [illegible] |
| 17 | 4654.59 | 37 | [illegible] |
| 18 | 4653.71 | 38 | [illegible] |
| 30 | 4654.74 | 39 | [illegible] |
| 31 | [illegible] | 40 | [illegible] |
| 32 | 4656.58 | 50 | [illegible] |
| 33 | [illegible] | 51 | [illegible] |
| 34 | 4654.55 | 56 | [illegible] |
| 35 | [illegible] | [illegible] | [illegible] |
| 36 | [illegible] | [illegible] | [illegible] |
| 37 | 4654.01 | 55 | [illegible] |
| 38 | 4653.91 | 54 | [illegible] |
| 39 | 4653.81 | 57 | [illegible] |
| 40 | 4653.70 | 58 | [illegible] |

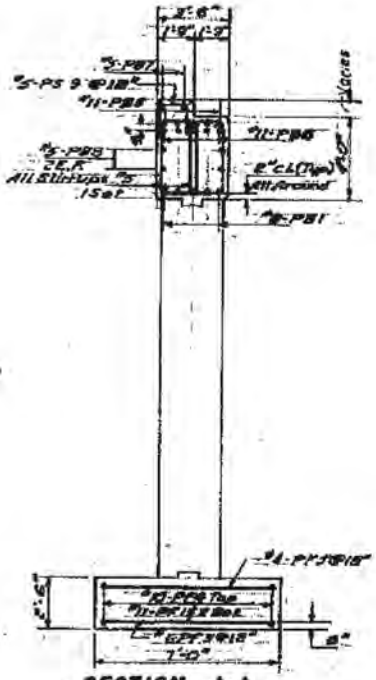


SECTION J-J
SCALE: 1/4" = 1'-0"

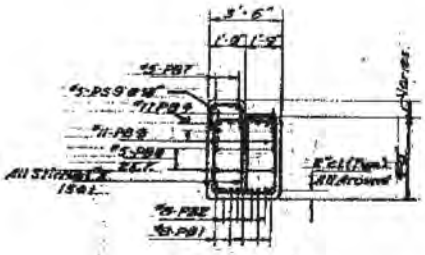


SECTION K-K
SCALE: 1/4" = 1'-0"

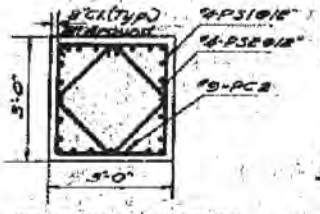

SECTION L-L (TYP)
SCALE: 1/4" = 1'-0"

PIERS NO.3 & NO.4

Rev. 7-18-60 AFA

DESIGN AND DRAWING BY
WESTERN ENGINEERS, INC. AND
EDWARDS AND KELCEY
CONSULTING ENGINEERS

SUBMITTED BY [signature]
CHIEF ENGINEER
UTAH ENGR. LIC. NO. 2164

UTAH STATE ROAD COMMISSION
SALT LAKE CITY, UTAH
BRIDGE DEPARTMENT

OREM 800 NORTH INTERCHANGE
146'-4" O/TO O
STA. 882+30.97
I-15(I-80S)VO
UTAH COUNTY

No. 25-168
No. F-13

STRUCTURE 3-18

FOR INFORMATION ONLY

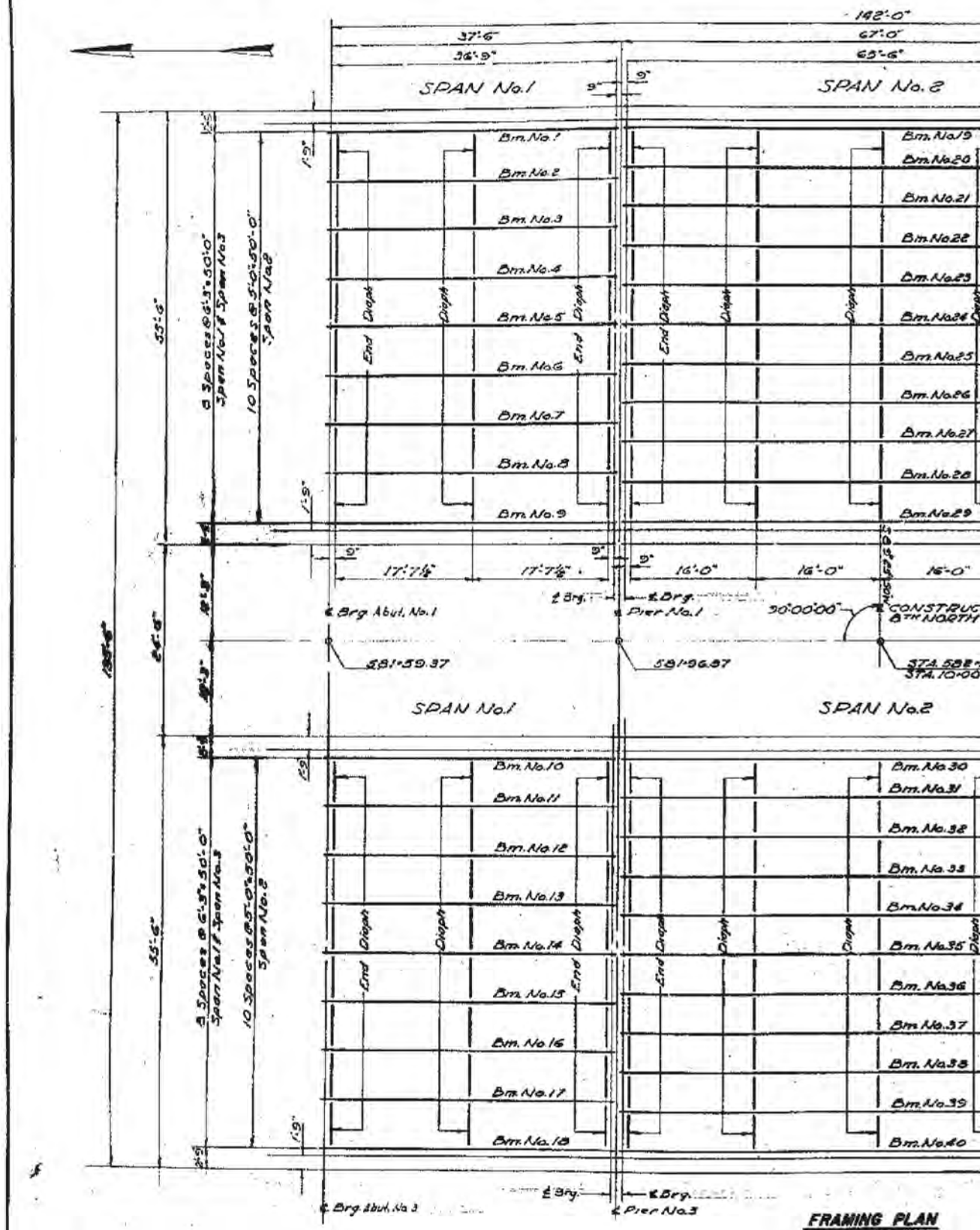


**FRAMING PLAN**

SCALE: 1/8" = 1'-0"

DGN File: 1P_PWPlans\16721\4433-E-13.dgn-for-inf-notice

02-MAY-2005

| FED. ROAD DIST. NO. | STATE | FED. AID PROJ. NO. | FISCAL YEAR | SHEET NO. | TOTAL SHEETS |
|---|---|---|---|---|---|
| UT | UTAH | I-15-6(91)265 | POST 1964 | | |

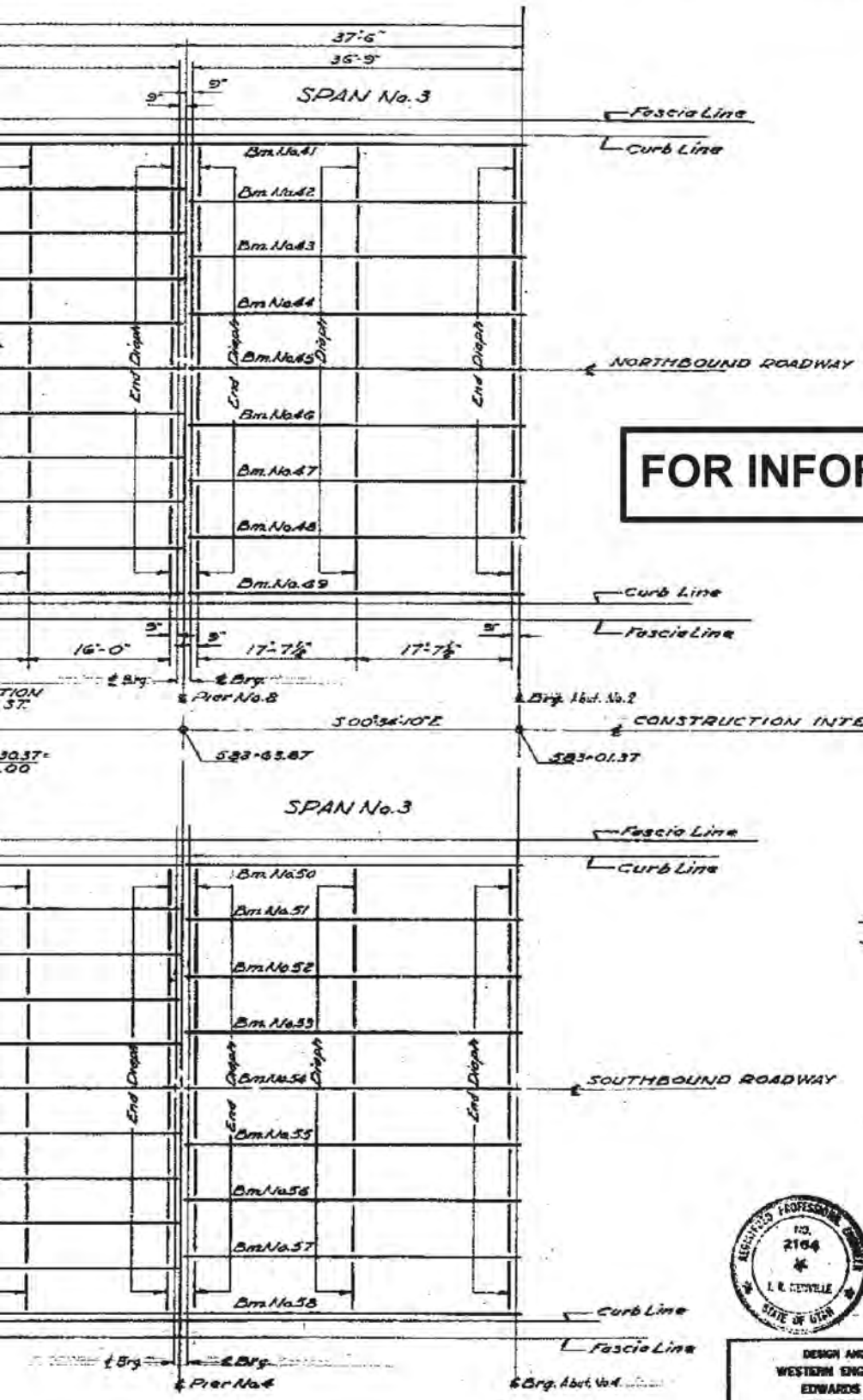


**FOR INFORMATION ONLY**

NOTE: FOR DIAPHRAGM DETAILS SEE SHEET 11 OF 13 SHEETS.

## FRAMING PLAN

REGISTERED PROFESSIONAL ENGINEER NO. 2164 L. R. KERVILLE STATE OF UTAH

Rev. 7-18-60 DFA

DESIGN AND DRAWING BY
WESTERN ENGINEERS, INC. AND
EDWARDS AND KELCEY
CONSULTING ENGINEERS

SUBMITTED BY ____ CHIEF ENGINEER
UTAH ENGR. LIC. NO. 2164

UTAH STATE ROAD COMMISSION
SALT LAKE CITY, UTAH

**OREM 800 NORTH INTERCHANGE**

STA. 582+30.37 I-15-6(91)265
LEHI-PROVO UTAH COUNTY

DESIGNED BY JRS
DRAWN BY F.C.
TRACED BY
CHECKED BY R.V.

DATE 12-1-60
APPROVED

No. 25-1-15
No. F-15

STRUCTURE 3-B

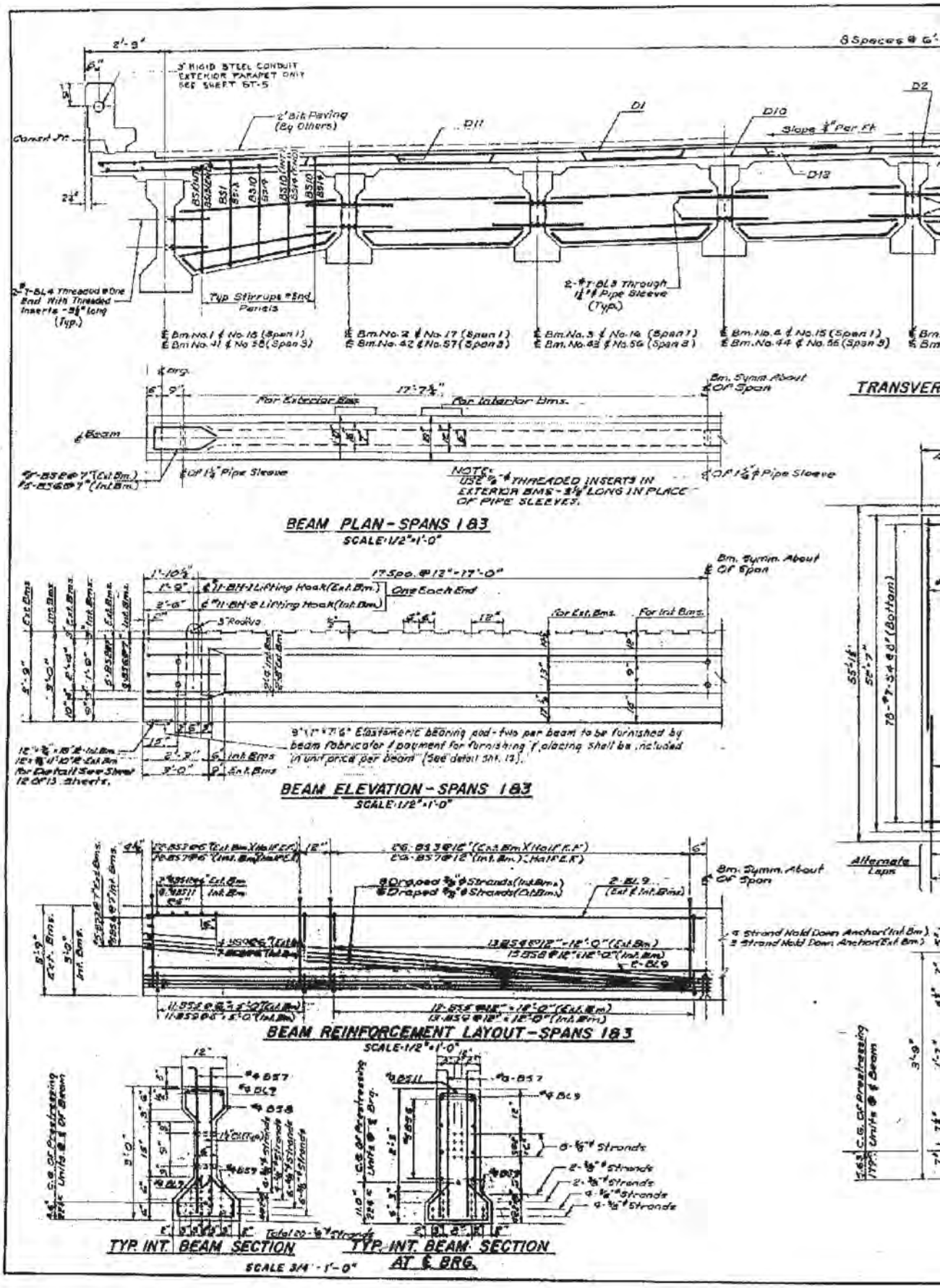
BEAM PLAN - SPANS 1 & 3
SCALE: 1/2" = 1'-0"
BEAM ELEVATION - SPANS 1 & 3
SCALE: 1/2" = 1'-0"
BEAM REINFORCEMENT LAYOUT - SPANS 1 & 3
SCALE: 1/2" = 1'-0"
TYP. INT. BEAM SECTION
TYP. INT. BEAM SECTION AT ℄ BRG.
SCALE 3/4" = 1'-0"
TRANSVER
3" RIGID STEEL CONDUIT EXTERIOR PARAPET ONLY SEE SHEET 6T-5
2" Blk Paving (By Others)
Const. Jt.
Slope 1/8" Per Ft
8 Spaces @ 6'
2-#7-BL4 Threaded @ One End With Threaded Inserts - 3 1/2" long (Typ.)
Typ Stirrups @ End Panels
2-#7-BL3 Through 1 1/2" ϕ Pipe Sleeve (Typ.)
℄ Brg.
℄ Beam
℄ Of 1 1/2" ϕ Pipe Sleeve
Bm. Symm. About ℄ Of Span
For Exterior Bms.
For Interior Bms.
NOTE: USE 5/8"-4 THREADED INSERTS IN EXTERIOR BMS - 3 1/2" LONG IN PLACE OF PIPE SLEEVES.
17 Spa. @ 12" = 17'-0"
One Each End
3" Radius
For Ext. Bms.
For Int. Bms.
Elastomeric bearing pad - two per beam to be furnished by beam fabricator & payment for furnishing & placing shall be included in unit price per beam (See detail sht. 13).
For Detail See Sheet 12 & 13 Sheets.
Alternate Laps
Draped 5/8" ϕ Strands (Int. Bms.)
Draped 5/8" ϕ Strands (Ext. Bms.)
4 Strand Hold Down Anchor (Int. Bm.)
3 Strand Hold Down Anchor (Ext. Bm.)
C.G. of Prestressing Units @ ℄ Beam
C.G. of Prestressing Units @ ℄ Brg.
Total 20 - 5/8" ϕ Strands

| FED. ROAD DIST. NO. | STATE | FED. AID PROJ. NO. | FISCAL YEAR | SHEET NO. | TOTAL SHEETS |
|---|---|---|---|---|---|
| UT | UTAH | I-15-6(9)126S | POST WAR | | |

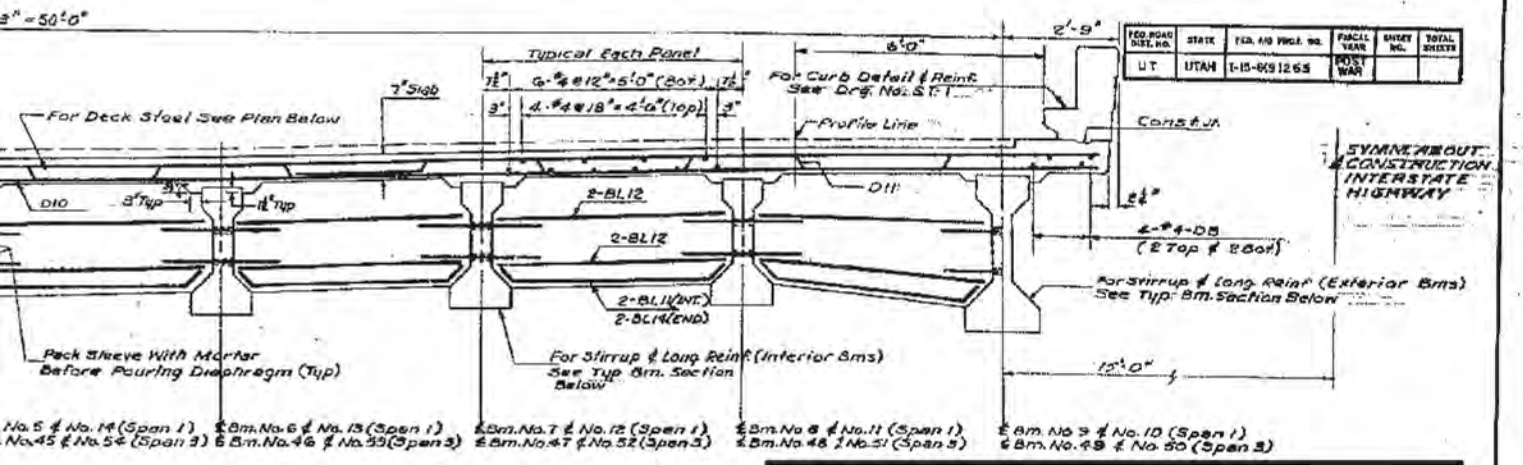


SE SECTION — SPANS 1 & 3

SCALE: ½" = 1'-0"

**FOR INFORMATION ONLY**

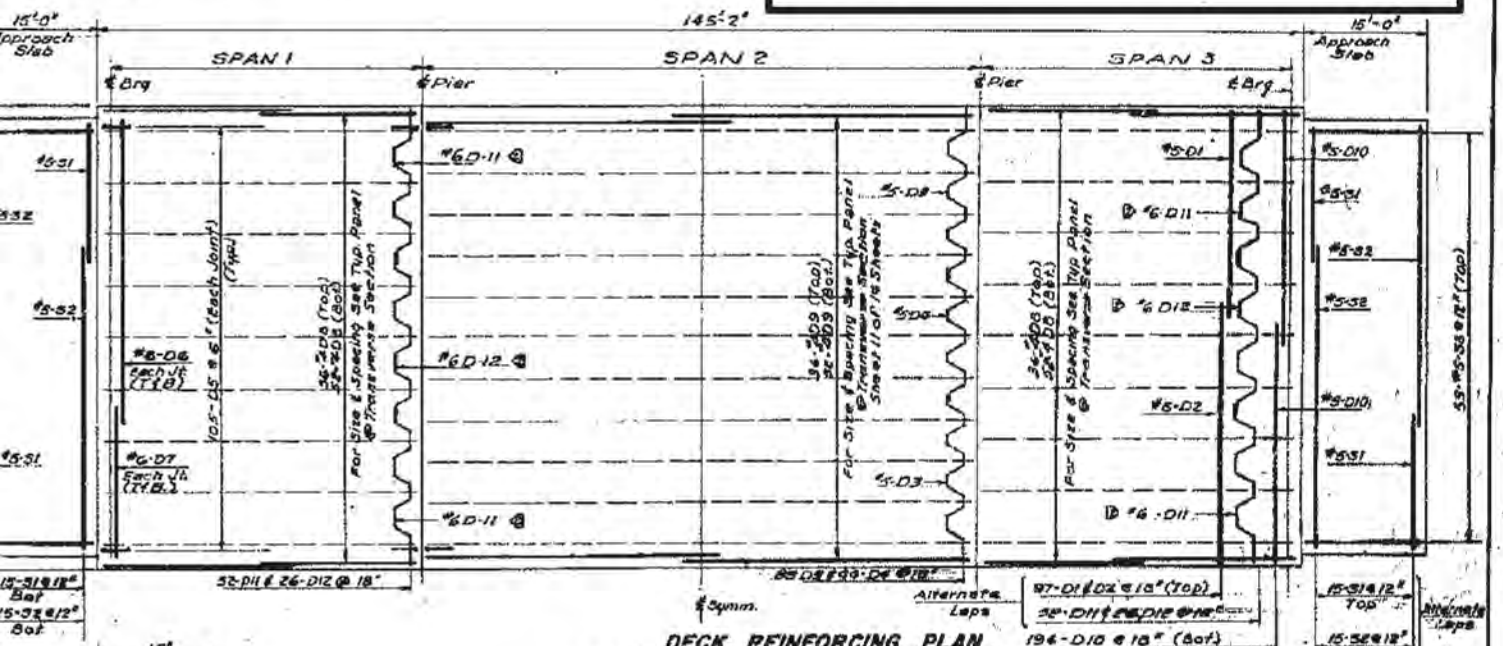


DECK REINFORCING PLAN

SCALE: 1" = 10'-0"

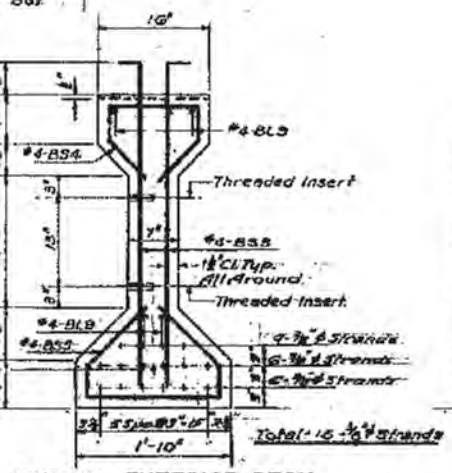


TYPICAL EXTERIOR BEAM SECTION — SPANS 1 & 3

SCALE: 1" = 1'-0"

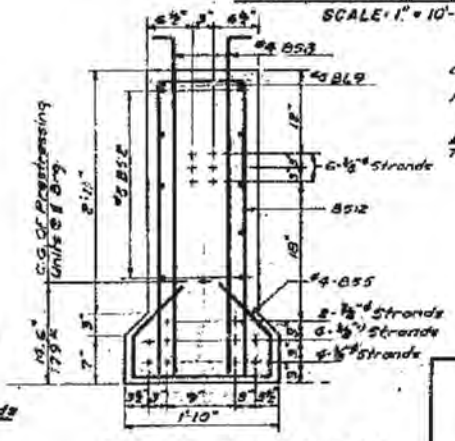


TYPICAL EXTERIOR BEAM SECTION AT ℄ BRG.

SCALE: 1" = 1'-0"

PRECAST PRESTRESSED BEAM DATA

ULTIMATE 28 DAY CYLINDER STRENGTH OF CONCRETE 5000 P.S.I.
ULTIMATE CYLINDER STRENGTH OF CONCRETE AT TIME OF PRESTRESSING 4000 P.S.I.
INITIAL TENSIONING FOR ½" ϕ STRANDS BASED ON STRANDS SHALL BE SHORT OF ½" INCHES TO THE END OF BEAM AND MORTAR SHALL BE APPLIED TO COVER ENTIRE FACE OF END BLOCK.

TRANSVERSE SECTION

REGISTERED PROFESSIONAL ENGINEER NO. 2164 J. R. NEWZILLE STATE OF UTAH

Rev. 7-13-60 DFA
Rev. 8-1-60 RJB

DESIGN AND DRAWING BY WESTERN ENGINEERS, INC. AND EDWARDS AND KELCEY CONSULTING ENGINEERS

SUBMITTED BY: CHIEF ENGINEER
UTAH ENGR. LIC. NO. 2164

SHEET 10 OF 51 SHEETS

UTAH STATE ROAD COMMISSION
SALT LAKE CITY, UTAH
BRIDGE DEPARTMENT

OREM 800 NORTH INTERCHANGE
146'-4" O. TO O.
STA. 582+30.27
LEHI-PROVO
I-15-6(9)126S
UTAH COUNTY

DESIGNED BY: V.H.
DRAWN BY: W.R.C.
TRACED BY: K.T.
CHECKED BY:
SCALE: AS NOTED
DATE: 12-13-60
APPROVED BY:
CHIEF ENGINEER
No. 25-1-15
Dwg. No. F-13

STRUCTURE 3-3

**FOR INFORMATION ONLY**

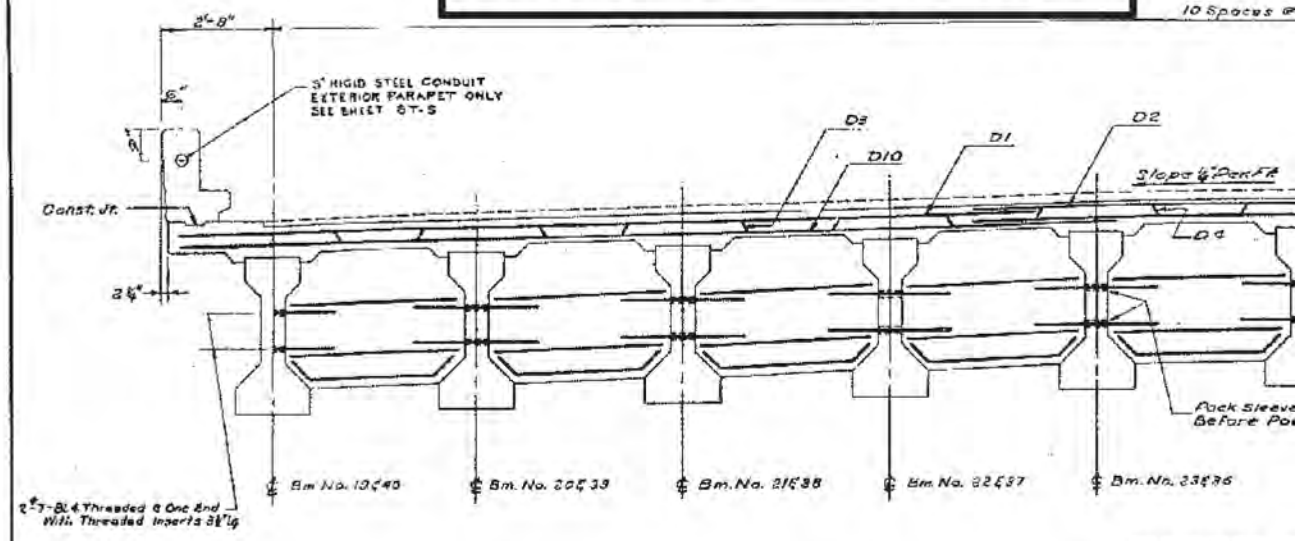


TRANSVERSE S

SCALE: ½"

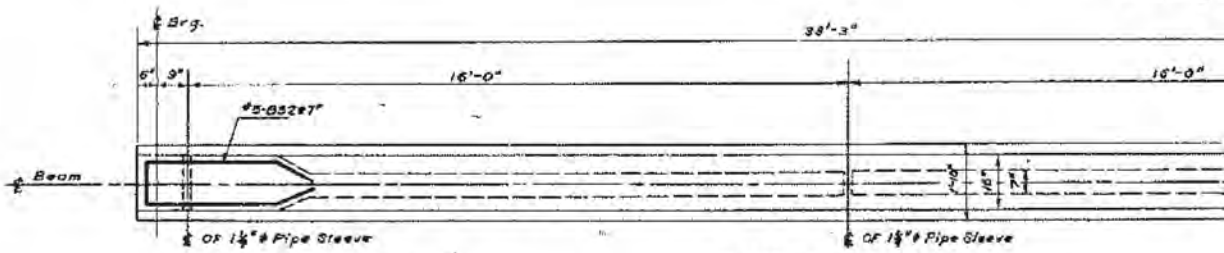


BEAM PLAN — SPAN 2

SCALE: ½" = 1'-0"

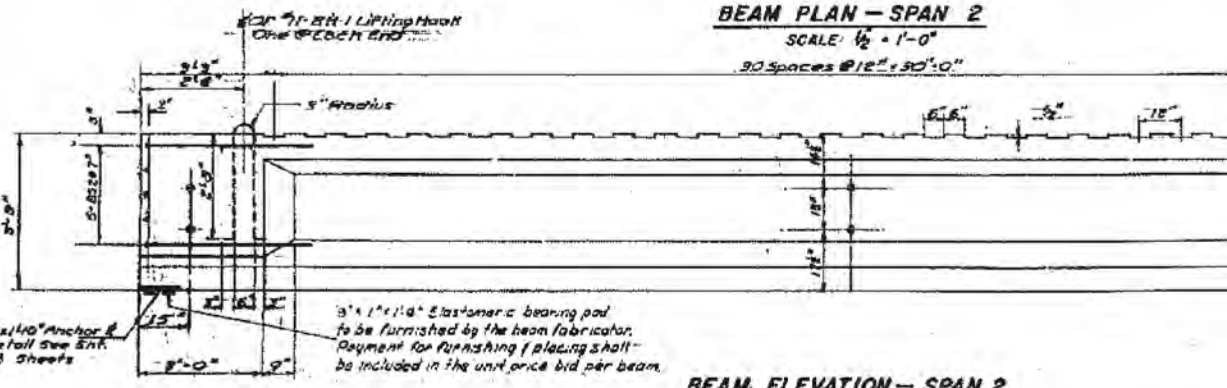


BEAM ELEVATION — SPAN 2

SCALE: ½" = 1'-0"

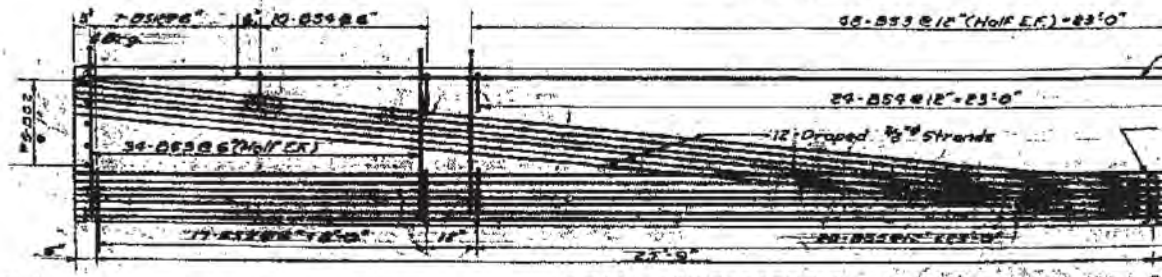


NOTE: REINFORCEMENT IN BEAM ABOVE IS FOR HALF THE SPAN. DOUBLE FOR TOTAL QUANTITY PER BEAM.

BEAM REINFORCEMENT LAYOUT — SPAN 2

SCALE: ½" = 1'-0"

DGN Files 3P, PWPubs\16721\4433_R-13-11-forinfoudon
02-MAY-2005

| FED. ROAD DIST. NO. | STATE | FED. AID PROJ. NO. | FISCAL YEAR | SHEET NO. | TOTAL SHEETS |
|---|---|---|---|---|---|
| UT | UTAH | I-15-6(91)265 | POST WAR | | |

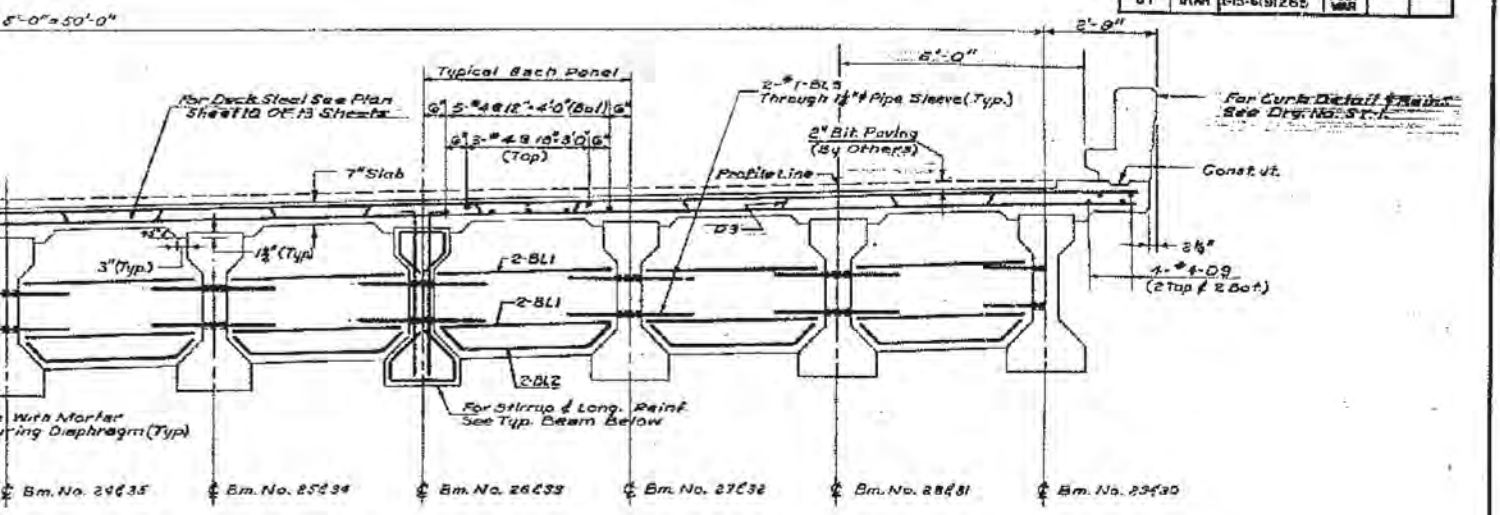


ECTION — SPAN 2

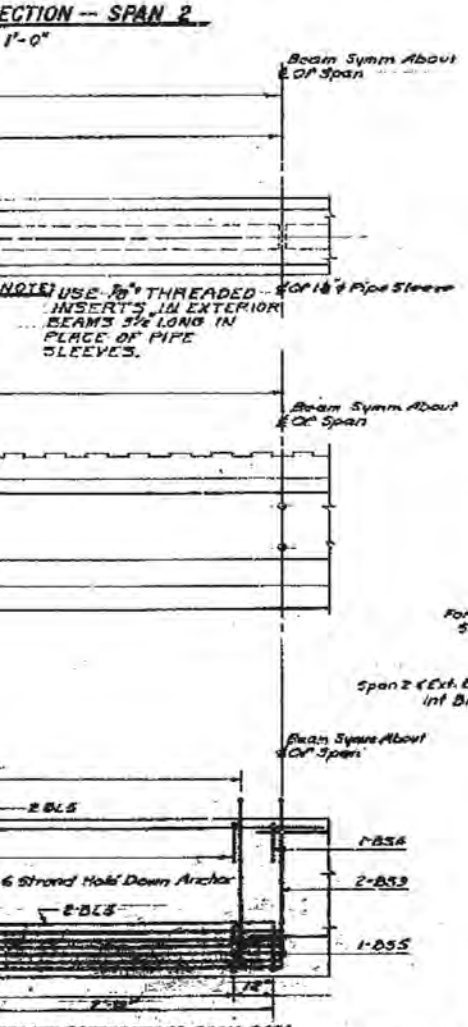


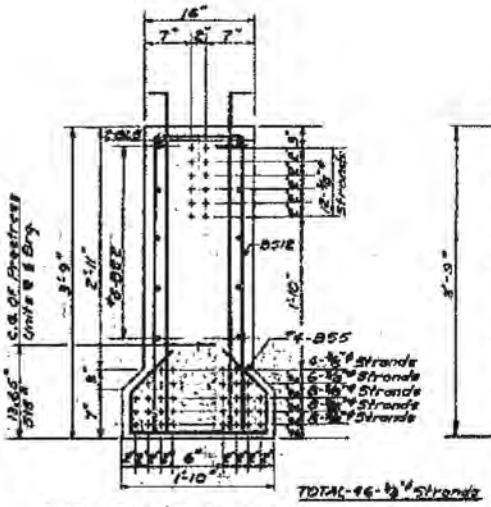


TYP. SECTION AT ℄ BRG.
SCALE: 1" = 1'-0"

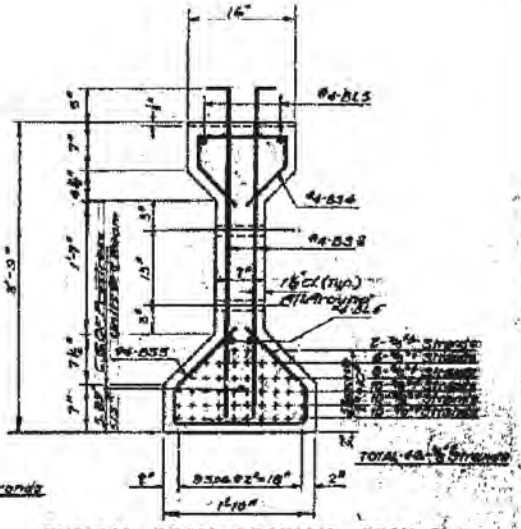


TYPICAL BEAM SECTION – SPAN 2
SCALE: 1" = 1'-0"

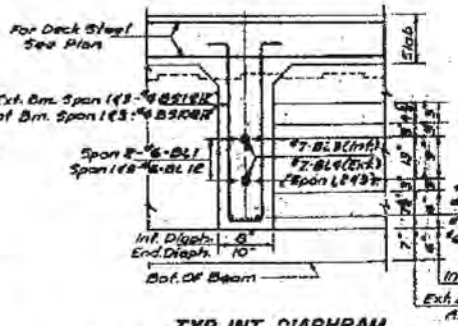


TRANSVERSE SECTION

TYP. INT. DIAPHRAM
END DIAPH. SIMILAR EXCEPT AS NOTED
SCALE 1" = 1'-0"

Per 7-18-60 DFA

RECAST PRESTRESSED BEAM DATA
ULTIMATE 28 DAY CYLINDER STRENGTH OF CONCRETE = 5000 P.S.I.
ULTIMATE CYLINDER STRENGTH OF CONCRETE AT TIME OF PRESTRESSING = 4000 P.S.I.
INITIAL TENSIONING FOR ½" ø STRAND = 19,000 LBS.
STRANDS SHALL BE BURNT OFF ½" INSIDE AT THE END OF BEAM AND MORTAR SHALL APPLIED TO COVER THE ENTIRE FACE OF END BLOCK.

REGISTERED PROFESSIONAL ENGINEER NO. 2164 J. R. NEWVILLE STATE OF UTAH

DESIGN AND DRAWING BY
WESTERN ENGINEERS, INC. AND
EDWARDS AND KELCEY
CONSULTING ENGINEERS

SUBMITTED BY CHIEF ENGINEER
UTAH ENGR. LIC. NO. 2164

UTAH STATE ROAD COMMISSION
SALT LAKE CITY, UTAH
BRIDGE DEPARTMENT

OREM 800 NORTH INTERCHANGE
146'-4" O. TO O.
STA. 502+30.37 I-15-6(91)265
LEHI-PROVO UTAH COUNTY

DESIGNED BY K.G. CHECKED BY
DRAWN BY A.R. APPROVED BY
TRACED BY
CHECKED BY K.V.

No. 25-1-15- No. F-13

STRUCTURE 2-4

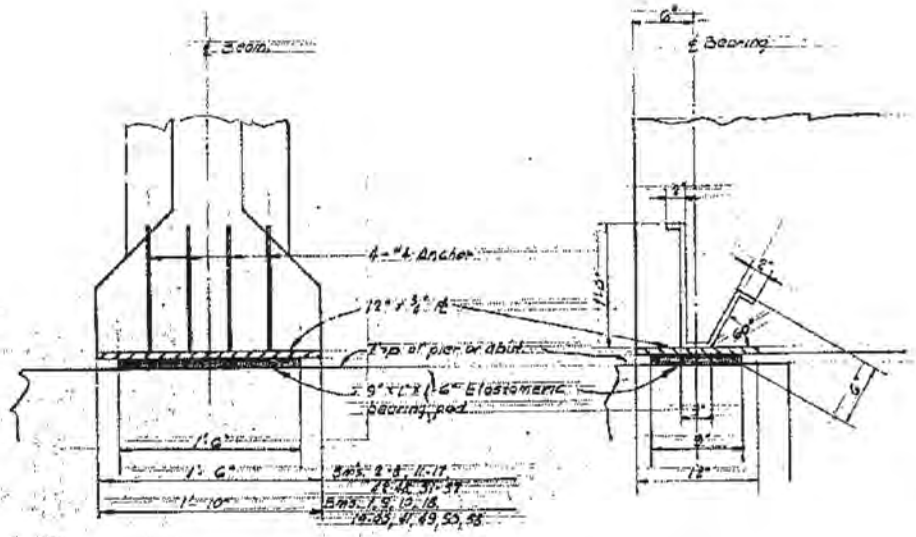


BEAM BEARING DETAILS

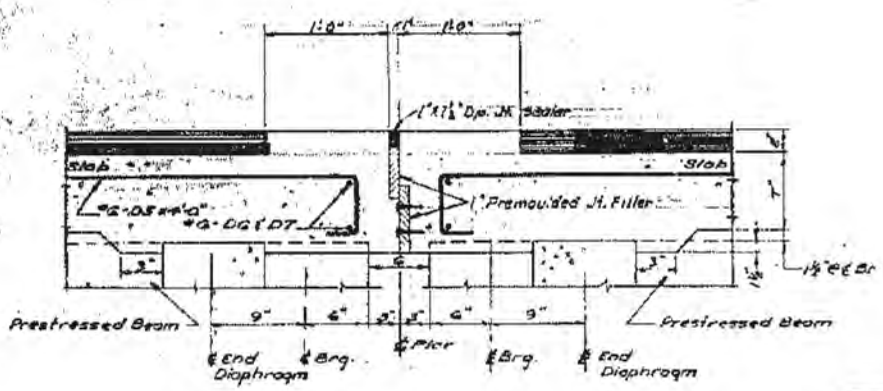


SECTION NORMAL TO PIERS

FOR INFO

DGN: Files 1P-PW\Phase1\6721\4433-F-113-12-Foundation

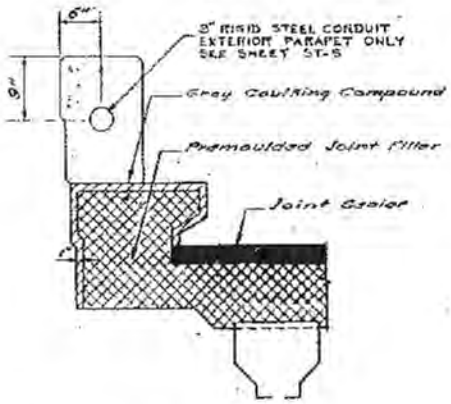


JOINT DETAIL @ PARAPET

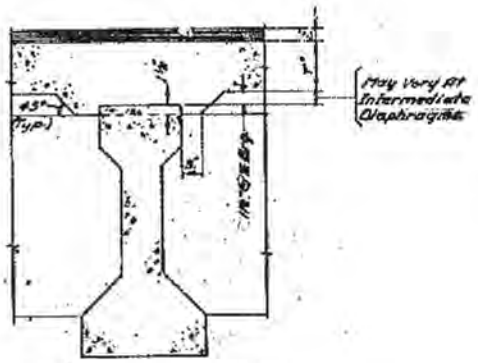


TYPICAL HAUNCH DETAIL

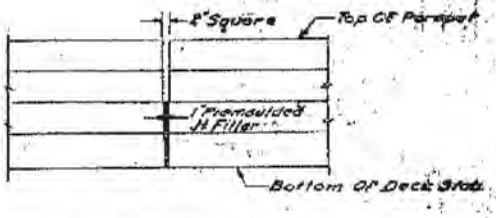


JOINT FILLER DETAILS AT PARAPETS

CONCRETE DETAILS

RCK 7-18-60 DFA

DESIGN AND DRAWING BY
WESTERN ENGINEERS, INC. AND
EDWARDS AND KELCEY
CONSULTING ENGINEERS

SUBMITTED BY [signature] CHIEF ENGINEER

UTAH ENGR. LIC. NO. 2168

REGISTERED PROFESSIONAL ENGINEER
NO. 2134
J. R. KOWALLE
STATE OF UTAH

UTAH STATE ROAD COMMISSION
SALT LAKE CITY, UTAH

OREM 800 NORTH
INTERCHANGE
146'-4" O. TO O.
STA. 582+30.37
LEHI-PROVO
I-15
UTAH COUNTY

DESIGNED BY R.J.B.
DRAWN BY C.B.
TRACED BY
CHECKED BY R.J.B.

DATE
DATE
DATE
APPROVED

No. 25-1-15
No. F-15

STRUCTURE

RMATION ONLY

# BILL OF REINFORCING

## ABUTMENT REINFORCING

| MARK | SIZE | LGTH. | NO. REQ. | TOTAL LENGTH | TYPE | A | B | C | D | E | F | G | H | J | K | O |
|---|---|---|---|---|---|---|---|---|---|---|---|---|---|---|---|---|
| AE1 | 5 | 2'-6" | 244 | 610'-0" | 1 | | | | | | | | | | | |
| 2 | 6 | 4'-0" | 208 | 832'-0" | 4 | | 18" | 2'-6" | | | | | | | | |
| 3 | 6 | 4'-3" | 160 | 680'-0" | 4 | | 12" | 4'-3" | | | | | | | | |
| 4 | 8 | 5'-9" | 160 | 920'-0" | 4 | | 12" | 4'-3" | | | | | | | | |
| AF1 | 5 | 6'-6" | 452 | 2938'-0" | 1 | | | | | | | | | | | |
| 2 | 5 | 30'-6" | 80 | 2440'-0" | 1 | | | | | | | | | | | |
| 3 | 5 | 16'-6" | 40 | 660'-0" | 1 | | | | | | | | | | | |
| 4 | 5 | 21'-6" | 40 | 860'-0" | 1 | | | | | | | | | | | |
| 5 | 5 | 4'-5" | 16 | 70'-8" | 1 | | | | | | | | | | | |
| AS1 | 5 | 4'-0" | 280 | 1120'-0" | 1 | | | | | | | | | | | |
| 2 | 5 | 4'-6" | 17 | 76'-6" | 1 | | | | | | | | | | | |
| 3 | 5 | 8'-0" | 34 | 272'-0" | 1 | | | | | | | | | | | |
| 4 | 5 | 10'-9" | 92 | 991'-6" | 1 | | | | | | | | | | | |
| 5 | 5 | 5'-10" | 13 | 75'-10" | | | | | | | | | | | | |
| 6 | 5 | 8'-6" | 13 | 110'-6" | | | | | | | | | | | | |
| 7 | 5 | 7'-0" | 13 | 91'-0" | | | | | | | | | | | | |
| 8 | 5 | 4'-11" | 5 | 24'-7" | | | | | | | | | | | | |
| 9 | 5 | 3'-3" | 5 | 16'-3" | | | | | | | | | | | | |
| 10 | 5 | 7'-0" | 10 | 70'-0" | | | | | | | | | | | | |
| 11 | 5 | 3'-10" | 10 | 38'-9" | | | | | | | | | | | | |
| 12 | 5 | 7'-9" | 62 | 480'-6" | | | | | | | | | | | | |
| 13 | 5 | 6'-3" | 5 | 31'-3" | | | | | | | | | | | | |
| 14 | 5 | 30'-0" | 29 | 870'-0" | | | | | | | | | | | | |
| 15 | 5 | 24'-0" | 28 | 672'-0" | | | | | | | | | | | | |
| 16 | 6 | 21'-6" | 12 | 258'-0" | | | | | | | | | | | | |
| 17 | 6 | 18'-3" | 12 | 219'-0" | | | | | | | | | | | | |
| 18 | 6 | 8'-6" | 19 | 158'-0" | 1 | | | | | | | | | | | |
| 19 | 5 | 10'-0" | 18 | 180'-0" | 1 | | | | | | | | | | | |
| 20 | 5 | 8'-2" | 160 | 666'-8" | 4 | | 18" | 2'-8" | | | | | | | | |
| 21 | 5 | 28'-0" | 20 | 560'-0" | 1 | | | | | | | | | | | |
| 22 | 5 | 22'-0" | 20 | 440'-0" | 1 | | | | | | | | | | | |
| 23 | 5 | 31'-6" | 12 | 378'-0" | 4 | | 18" | 30'-0" | | | | | | | | |
| 24 | 5 | 25'-6" | 12 | 306'-0" | 4 | | 18" | 28'-0" | | | | | | | | |
| 25 | 5 | 8'-10" | 21 | 185'-6" | 1 | | | | | | | | | | | |
| 26 | 5 | 11'-6" | 18 | 207'-0" | 1 | | | | | | | | | | | |
| AH1 | 5 | 9'-6" | 20 | 190'-0" | 1 | | | | | | | | | | | |
| 2 | 5 | 10'-6" | 20 | 210'-0" | 1 | | | | | | | | | | | |
| 3 | 5 | 6'-0" | 4 | 24'-0" | 4 | | 18" | 19'-6" | | | | | | | | |
| 4 | 5 | 20'-0" | 4 | 80'-0" | 1 | | | | | | | | | | | (2) |
| 5 | 5 | 21'-6" | 4 | 86'-0" | 4 | | 18" | 20'-0" | | | | | | | | (2) |
| 6 | 5 | 19'-6" | 24 | 468'-0" | 1 | | | | | | | | | | | |
| 7 | 5 | 18'-6" | 4 | 66'-0" | 1 | | | | | | | | | | | |
| 8 | 5 | 18'-6" | 4 | 74'-0" | 1 | | | | | | | | | | | |
| 9 | 5 | 5'-0" | 16 | 80'-0" | 1 | | | | | | | | | | | |
| 10 | 5 | 4'-0" | 16 | 64'-0" | 1 | | | | | | | | | | | |
| 11 | 5 | 7'-6" | 56 | 420'-0" | 1 | | | | | | | | | | | |
| 12 | 5 | 8'-0" | 8 | 16'-0" | 1 | | | | | | | | | | | |
| 13 | 6 | 9'-6" | 36 | 342'-0" | 1 | | | | | | | | | | | |
| 14 | 6 | 10'-6" | 36 | 378'-0" | 1 | | | | | | | | | | | |
| 15 | 5 | 18'-0" | 4 | 72'-0" | 4 | | 18" | 16'-6" | | | | | | | | |
| 16 | 5 | 20'-0" | 4 | 80'-0" | 4 | | 18" | 18'-6" | | | | | | | | |
| 17 | 5 | 12'-6" | 46 | 575'-0" | 1 | | | | | | | | | | | |
| 18 | 5 | 13'-6" | 26 | 351'-0" | 1 | | | | | | | | | | | |
| 19 | 5 | 19'-6" | 28 | 546'-0" | 1 | | | | | | | | | | | |
| 20 | 5 | 22'-0" | 4 | 88'-0" | 1 | | | | | | | | | | | |
| 21 | 5 | 23'-6" | 4 | 94'-0" | 1 | | | | | | | | | | | |
| 22 | 6 | 18'-6" | 48 | 888'-0" | 1 | | | | | | | | | | | |
| 23 | 6 | 13'-6" | 48 | 648'-0" | 1 | | | | | | | | | | | |
| 24 | 5 | 23'-6" | 4 | 94'-0" | 4 | | 18" | 22'-0" | | | | | | | | |
| 25 | 5 | 25'-0" | 4 | 100'-0" | 4 | | 18" | 23'-6" | | | | | | | | |
| 26 | 5 | 17'-6" | 28 | 490'-0" | 1 | | | | | | | | | | | |

## PIER REINFORCEMENT

| MARK | SIZE | LGTH. | NO. REQ. | TOTAL LENGTH | TYPE | A | B | C | D | E |
|---|---|---|---|---|---|---|---|---|---|---|
| PB1 | 8 | 30'-0" | 30 | 900'-0" | 1 | | | | | |
| 2 | 8 | 10'-3" | 32 | 328'-0" | 1 | | | | | |
| 3 | 8 | 11'-8" | 75 | 875'-0" | 22 | 12" | 2'-0" | 5'-9" | 2'-0" | |
| 4 | 11 | 22'-9" | 20 | 445'-0" | 1 | | | | | |
| 5 | 11 | 20'-0" | 40 | 800'-0" | 1 | | | | | |
| 6 | 11 | 14'-0" | 40 | 560'-0" | 1 | | | | | |
| 7 | 5 | 22'-6" | 16 | 360'-0" | 1 | | | | | |
| 8 | 5 | 27'-0" | 32 | 864'-0" | 1 | | | | | |
| 9 | 11 | 12'-0" | 12 | 144'-0" | 1 | | | | | |
| PC1 | 9 | 18'-9" | 144 | 2700'-0" | 1 | | | | | |
| 2 | 9 | 21'-9" | 144 | 3132'-0" | 1 | | | | | |
| PD1 | 9 | 6'-9" | 288 | 1944'-0" | 4 | | 12" | 5'-9" | | |
| PF1 | 11 | 31'-3" | 84 | 2625'-0" | 1 | | | | | |
| 2 | 11 | 12'-6" | 84 | 1050'-0" | 1 | | | | | |
| 3 | 6 | 6'-6" | 180 | 1170'-0" | 1 | | | | | |
| 4 | 10 | 21'-0" | 88 | 1848'-0" | 1 | | | | | |
| 5 | 4 | 6'-6" | 120 | 780'-0" | 1 | | | | | |
| PS1 | 4 | 11'-7" | 188 | 2194'-5" | 12 | 5" | 2'-8" | 2'-8" | 2'-8" | 2'-8" |
| 2 | 4 | 7'-7" | 198 | 1502'-5" | 12 | 5" | 1'-8" | 1'-8" | 1'-8" | 1'-8" |
| 3 | 5 | 10'-11" | 240 | 2620'-0" | 12 | 5" | 1'-7" | 3'-8" | 1'-7" | 3'-8" |
| 4 | 5 | 10'-7" | 16 | 169'-9" | 12 | 5" | | 3'-6" | | 3'-6" |
| 5 | 5 | 10'-3" | 16 | 164'-0" | 12 | 5" | | 3'-9" | | 3'-9" |
| 6 | 5 | 9'-11" | 16 | 158'-8" | 12 | 5" | | 3'-2" | | 3'-2" |
| 7 | 5 | 9'-7" | 16 | 153'-6" | 12 | 5" | | 3'-0" | | 3'-0" |
| 8 | 5 | 9'-3" | 16 | 148'-0" | 12 | 5" | 1'-7" | 2'-10" | 1'-7" | 2'-10" |
| 9 | 5 | 2'-11" | 120 | 350'-0" | 21 | | 9" | 1'-6" | 9" | |

## DECK REINFORCEMENT

22'-1"

| MARK | SIZE | LGTH. | NO. REQ. | TOTAL LENGTH | TYPE | A | B | C | D | E |
|---|---|---|---|---|---|---|---|---|---|---|
| D1 | 5 | 29'-9" | 99 | 980'-6" | 1 | | | | | |
| 2 | 5 | 31'-6" | 194 | 6111'-0" | 1 | | | | | |
| 3 | 5 | 26'-7" | 176 | 4678'-8" | 28 | | 3'-3" | 7" | 2'-5" | 1'-11" |
| 4 | 5 | 15'-3" | 88 | 1406'-0" | 27 | | | 7" | 2'-5" | 1'-11" |
| 5 | 6 | 9'-0" | 160 | 1440'-0" | 23 | | | | | |
| 6 | 6 | 36'-3" | 24 | 870'-0" | 1 | | | | | |
| 7 | 6 | 18'-9" | 24 | 938'-0" | 1 | | | | | |
| 8 | 4 | 20'-0" | 352 | 7040'-0" | 1 | | | | | |
| 9 | 4 | 26'-0" | 176 | 4576'-0" | 1 | | | | | |
| 10 | 5 | 29'-0" | 288 | 8352'-0" | 1 | | | | | |
| 11 | 6 | 20'-3" | 208 | 4212'-0" | 28 | | 3'-6" | 7" | 3'-0" | 2'-5" |
| 12 | 6 | 22'-9" | 104 | 2366'-0" | 27 | | | 7" | 3'-0" | 2'-5" |

## APPROACH SLAB REINFORCEM

| MARK | SIZE | LGTH. | NO. REQ. | TOTAL LENGTH | TYPE | A | B | C | D | E |
|---|---|---|---|---|---|---|---|---|---|---|
| S1 | 5 | 16'-6" | 120 | 1980'-0" | 1 | | | | | |
| 2 | 5 | 36'-6" | 120 | 4380'-0" | 1 | | | | | |
| 3 | 5 | 19'-6" | 212 | 3774'-0" | 1 | | | | | |
| 4 | 7 | 18'-6" | 212 | 3774'-0" | 1 | | | | | |

## CURB & PARAPET REINFORCEM

| MARK | SIZE | LGTH. | NO. REQ. | TOTAL LENGTH | TYPE | A | B | C | D | E |
|---|---|---|---|---|---|---|---|---|---|---|
| CC1 | 5 | 8'-2" | 462 | 3773'-0" | 29 | 8" | 2'-10½" | 2'-7" | 12" | 12" |
| 2 | 5 | 3'-1" | 619 | 1893'-0" | 20 | 19½" | 1'-8½" | | | |
| 3 | 5 | 6'-0" | 152 | 912'-0" | 26 | | 2'-10 | 8" | 2'-6" | |
| 4 | 4 | 17'-6" | 36 | 630'-0" | 1 | | | | | |
| 5 | 4 | 19'-6" | 108 | 2106'-0" | 1 | | | | | |
| 6 | 4 | 23'-0" | 84 | 1932'-0" | 1 | | | | | |
| 7 | 4 | 22'-6" | 36 | 810'-0" | 1 | | | | | |

## DIAPHRAGM REINFORCEM

| MARK | SIZE | LGTH. | NO. REQ. | TOTAL LENGTH | TYPE | A | B | C | D | E |
|---|---|---|---|---|---|---|---|---|---|---|
| BC1 | 6 | 8'-3" | 400 | 1700'-0" | 1 | | | | | |
| 2 | 4 | 6'-5" | 120 | 830'-0" | 30 | 7½" | 3½" | 7½" | | |
| 3 | 7 | 1'-6" | 348 | 522'-0" | 1 | | | | | |
| 4 | 7 | 0'-0" | 88 | 66'-0" | 1 | | | | | |
| 11 | 4 | 5'-9" | 64 | 368'-0" | 30 | 6" | 4'-9" | 6" | | |
| 12 | 6 | 5'-6" | 384 | 2112'-0" | 1 | | | | | |
| 13 | 6 | 9'-5" | 80 | 753'-0" | 30 | 7½" | 3'-2" | 7½" | | |
| 14 | 6 | 5'-9" | 128 | 736'-0" | 30 | 6" | 4'-9" | 6" | | |
| BS1 | 4 | 7'-9" | 516 | 3998'-0" | 13 | | 3" | 3'-5" | 5" | 3'-5" |
| 10 | 4 | 6'-7" | 384 | 2528'-0" | 13 | | 3" | 2'-10" | 5" | 2'-10" |
| 13 | 4 | 7'-11" | 32 | 253'-4" | 13 | | 3" | 3'-5" | 7" | 3'-5" |
| 14 | 4 | 6'-0" | 48 | 324'-0" | 13 | | 3" | 2'-10" | 7" | 2'-10" |

**FOR INFORMATION ONLY**

| NO. 90 AB DIST. NO. | STATE | FED. AID PROJ. NO. | FISCAL YEAR | SHEET NO. | TOTAL SHEETS |
|---|---|---|---|---|---|
| UT. | UTAH | I-15-6(8)265 - | POST WAR | | |

# G STEEL

| F | G | H | J | K | O | MARK | SIZE | LGTH. | NO. REQ. | TOTAL LENGTH | TYPE | A | B | C | D | E | F | G | H | J | K | O |
|---|---|---|---|---|---|---|---|---|---|---|---|---|---|---|---|---|---|---|---|---|---|---|
| | | | | | | | | | | PRESTRESSED CONCRETE BEAM REINFORCEMENT | | | | | | | | | | | | |
| | | | | | | BC5 | 4 | 19'0" | 176 | 2968'0" | 1 | | | | | | | | | | | |
| | | | | | | BC9 | 4 | 49'9" | 288 | 5900'0" | 1 | | | | | | | | | | | |
| | | | | | | *B52 | 5 | 8'9" | 300 | 2625'0" | 31 | 2'10" | 1'0" | 2'0" | 1'0" | 1'0" | | | | | | |
| | | | | | | * 3 | 4 | 9'2" | 2420 | 18648'0" | 4 | 3'11" | 3" | | | | | | | | | |
| | | | | | | * 4 | 4 | 3'7" | 1780 | 6013'6" | 31 | 5" | 1'3" | 5" | 9" | 9" | | | | | | |
| | | | | 7 | | * 5 | 4 | 9'5" | 2210 | 9761'6" | 21 | 5" | 1'7" | 5" | 1'0" | 1'0" | | | | | | |
| | | | | | | * 6 | 5 | 3'5" | 2274 | 1837'5" | 31 | 2'1" | 9" | 2'4" | 9" | 9" | | | | | | |
| | | | | | | * 7 | 4 | 3'5" | 2688 | 9184'0" | 4 | 3'2" | 3" | | | | | | | | | |
| | | | | | | * 8 | 4 | 2'5" | 1120 | 2707'0" | 31 | 4" | 9" | 4" | 6" | 6" | | | | | | |
| | | | | | | * 9 | 4 | 3'7" | 1344 | 4815'7" | 31 | 4" | 1'3" | 4" | 1'0" | 1'0" | | | | | | |
| | | | | | | * 11 | 4 | 6'1" | 224 | 1362'7 | 21 | | 2'8 | 9" | 2'8" | | | | | | | |
| | | | | | | * 12 | 4 | 7'11" | 420 | 3325'0 | 21 | | 3'5" | 1'11" | 3'5" | | | | | | | |
| | | | | | | | | | | * REINF. NOT INCLUDED IN RE STEEL ESTIMATE - TO BE FURNISHED BY BEAM FABRICATOR | | | | | | | | | | | | |
| | | | | | | 29,551'2" | of | No. 4 | bars @ | .668 | #/ft. = | 19740 | | | | | | | | | | |
| | | | | | | 68,253'0" | " | No. 5 | " @ | 1.043 | #/ft. = | 71,183 | | | | (2) | | | | | | |
| | | | | | | 23,236'0" | " | No. 6 | " @ | 1.502 | #/ft. = | 34,900 | | | | (2) | | | | | | |
| 3 | 5'0" | 5" | | 5" | | 3,668'0" | " | No. 7 | " @ | 2.044 | #/ft. = | 7,498 | | | | | | | | | | |
| 3 | 5'0" | 5" | | 5" | | 2,549'0" | " | No. 8 | " @ | 2.670 | #/ft. = | 6,723 | | | | | | | | | | |
| | | | | | | 7,776'0" | " | No. 9 | " @ | 3.400 | #/ft. = | 26,438 | | | | | | | | | | |
| | | | | | | 1,849'0" | " | No. 10 | " @ | 4.303 | #/ft. = | 7,957 | | | | | | | | | | |
| | | | | | | 5,628'0" | " | No. 11 | " @ | 5.313 | #/ft. = | 29,880 | | | | | | | | | | |
| | | | | | | | | | | TOTAL | = | 204,306 | lbs. | | | (2) | | | | | | |
| 2 | 6'3" | 5" | | 5" | | | | | | | | | | | | | | | | | | |
| 3 | 6'3" | 5" | | 5" | | | | | | | | | | | | | | | | | | |
| ENT | | | | | | | | | | | | | | | | | | | | | | |
| NT | | | | | | | | | | | | | | | | | | | | | | |
| 1" | 12" | | | | | | | | | | | | | | | | | | | | | |
| 1" | 12" | | | | | | | | | | | | | | | | | | | | | |
| ENT | | | | | | | | | | | | | | | | | | | | | | |
| 3" | | | | | | | | | | | | | | | | | | | | | | |
| 5" | | | | | | | | | | | | | | | | | | | | | | |
| 3" | | | | | | | | | | | | | | | | | | | | | | |
| 5" | | | | | | | | | | | | | | | | | | | | | | |

## BAR TYPES

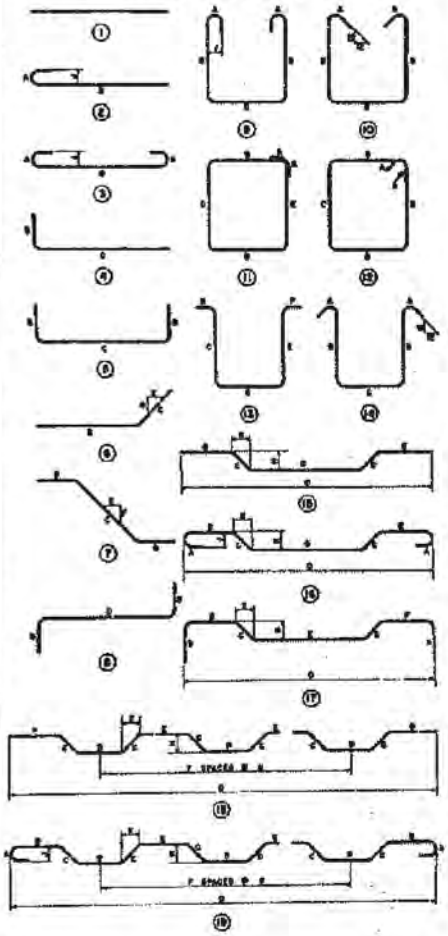


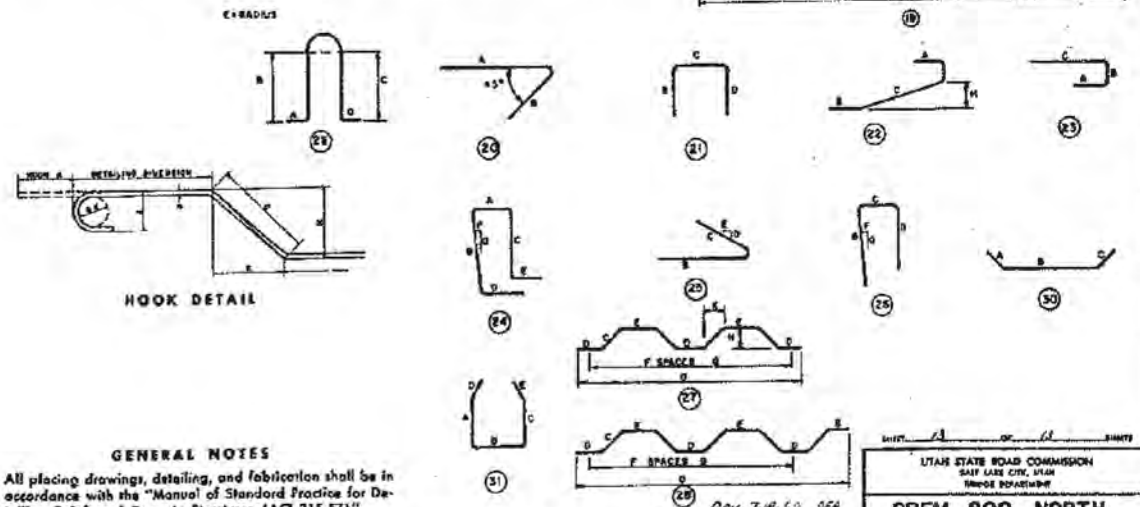


## GENERAL NOTES

1. All placing drawings, detailing, and fabrication shall be in accordance with the "Manual of Standard Practice for Detailing Reinforced Concrete Structures (ACI 315-57)".
2. All dimensions shown for bar bending details are out-to-out of bars.

DESIGN AND DRAWING BY
WESTERN ENGINEERS, INC. AND
EDWARDS AND KELCEY
CONSULTING ENGINEERS

Submitted by: [signature] CHIEF ENGINEER
UTAH ENGR. LIC. NO. 2162

REV. 7-18-60 JFA
REV. 8-1-60 EWK

SHEET 13 OF 61 SHEETS

UTAH STATE ROAD COMMISSION
SALT LAKE CITY, UTAH
BRIDGE DEPARTMENT

**OREM 800 NORTH INTERCHANGE**
**146'-4" O. TO O.**

STA. 582+30.37 I-15-8(9)265
LEHI-PROVO UTAH COUNTY

DESIGNED BY AK — SCALE AS NOTED
DRAWN BY AK — ISSUED Jul. 13, 1960
TRACED BY — APPROVED D. L. Sayers
CHECKED BY VG — CHIEF BRIDGE ENGINEER

EST. NO. 25-1-13 — DWG. NO. F-13

STRUCTURE 3-8

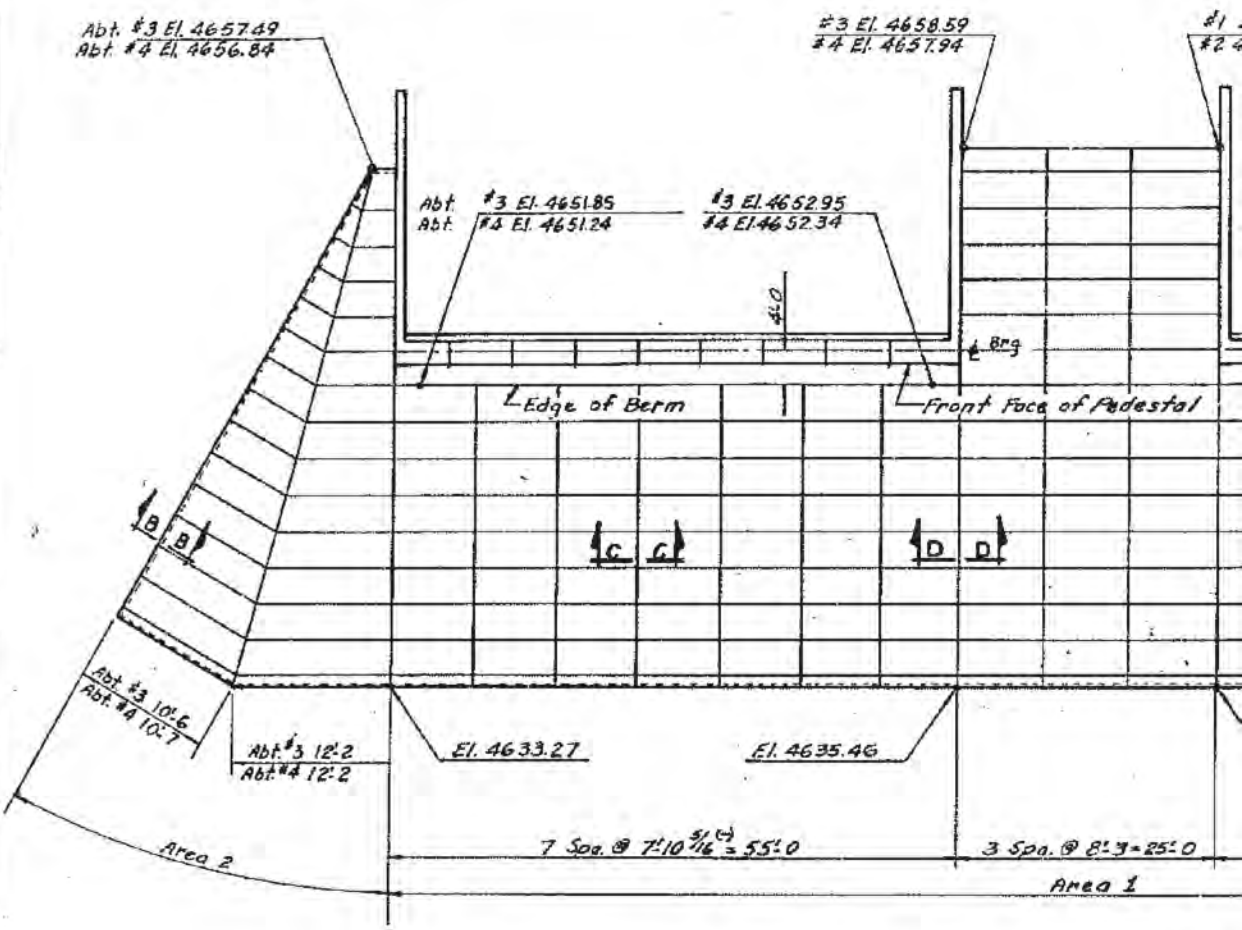


PLANVIEW NORTH SLOPE PROTECTI
South Slope Protection, (Abuts. 2 & 4) Simil

Note:
All Curved Segments are 15.*

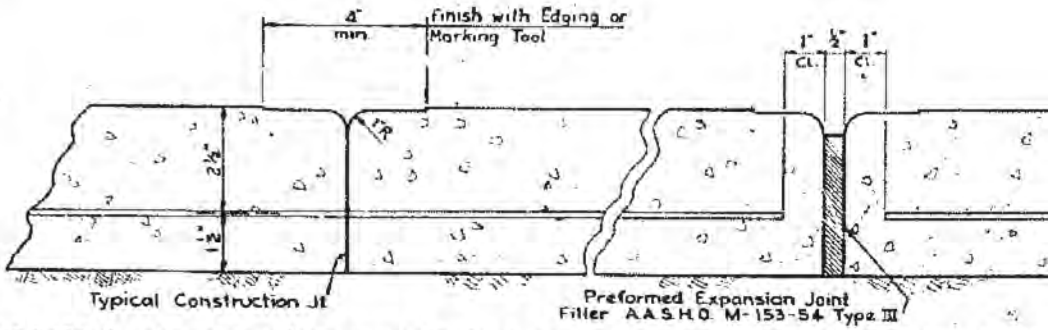


Locate Construction Joints as needed in placing slab. Locate vertical Expansion Joints

SECTION C-C

SECTION D-D

**FOR INFORMATION ONLY**

02-MAY-2005 DGN Files IP: PWPubns\1672\4433.F-13.13e-Form1Ovcon

| CONCRETE SLOPE PROTECTION | | | | |
|---|---|---|---|---|
| Location | Area 1 | Area 2 | Area 3 | Quantity Sq. Yd. |
| Abut. #1 & 3 | 5,013 | 1,226 | | 693 |
| Abut. #2 & 4 | 4,893 | 1,241 | | 682 |
| | | | | 1,375 |

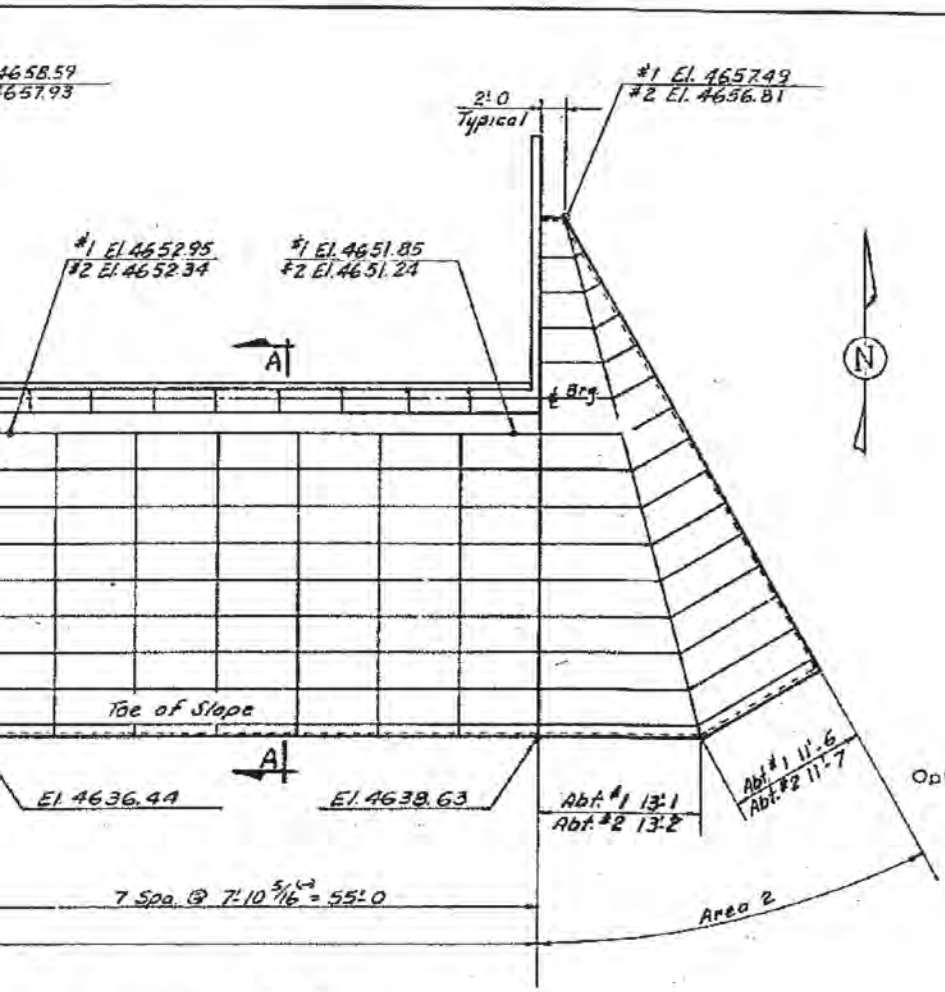


NOTES

1. Quantity in Sq. Yd. is estimated exposed Surface
2. Elevations at Toe of Slope are approximate only and shall be verified at time of Construction by the Engineer.
3. Payment for furnishing and placing welded wire fabric shall be included in the contract unit price per sq. yd. for concrete slope protection.
4. All areas may be varied by the Project Engineer to suit field conditions.

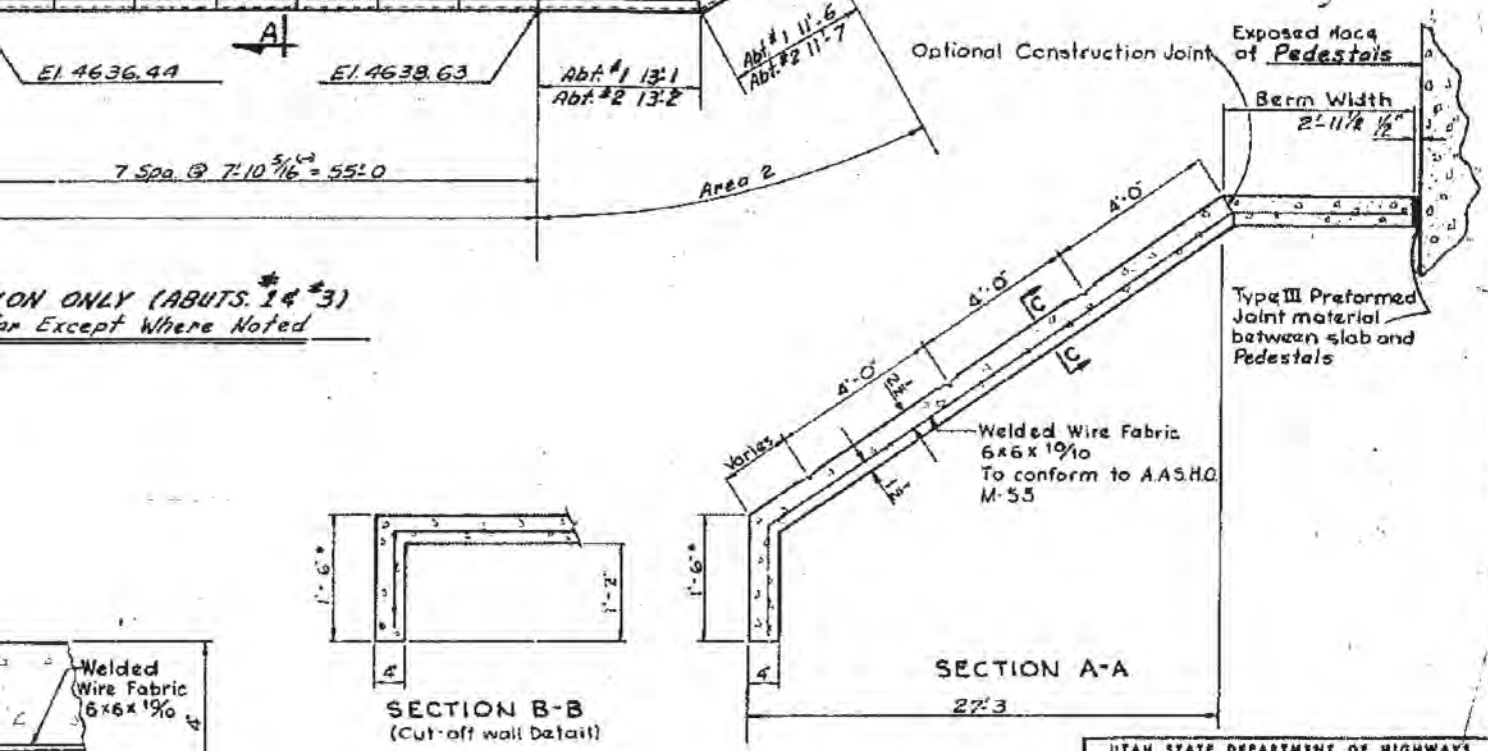


* NOTE:
Cut-off wall surface area is not included in estimated quantities of Concrete Slope Protection.

UTAH STATE DEPARTMENT OF HIGHWAYS
SALT LAKE CITY, UTAH
STRUCTURES DIVISION

OREM 800 NO. INTERCHANGE

CONCRETE SLOPE PROTECTION

| | | |
|---|---|---|
| DESIGNED BY C.D.R. 7-29-69 | CHECKED BY | I-15-6(66)267 |
| DRAWN BY J.T.H. 5-26-69 | CHECKED BY P.M.C. 7-29-69 | HIGHWAY NUMBER |
| QUANTITIES BY P.M.C. 7-29-69 | CHECKED BY J.T.H. 5-26-69 | 582 + 30.37 |
| APPROVED RECOMMENDED 7-29-69 DATE | Charles D. Clay ENGINEER | STATION |
| APPROVED 7-30-69 DATE | Ray Fowling DIRECTOR, ENG. & | UTAH COUNTY |

| NO. | BY | DATE | REMARKS |
|---|---|---|---|
| | | | REVISIONS |

NO. NO. DWG. F13 13A OF 13

ENG. AUTH. CONSTN. AUTH.

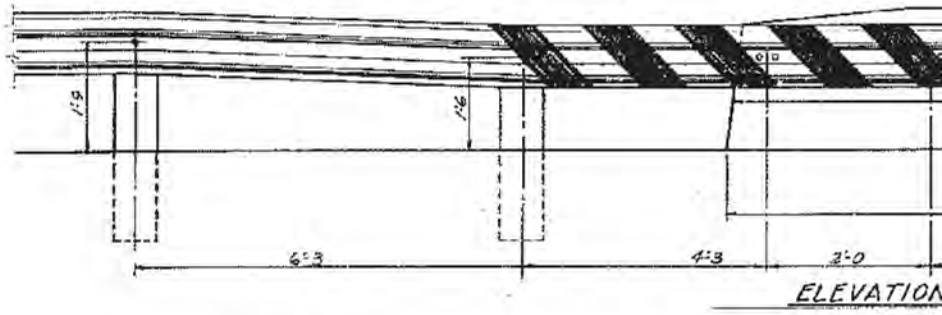


ELEVATION

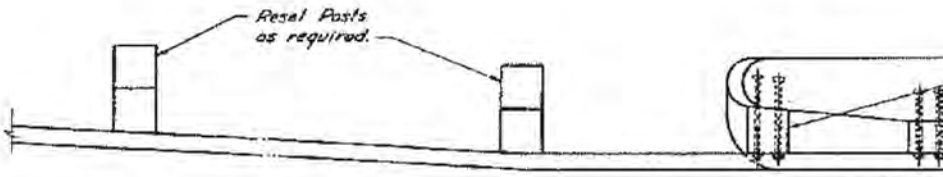


PLAN
Approach End

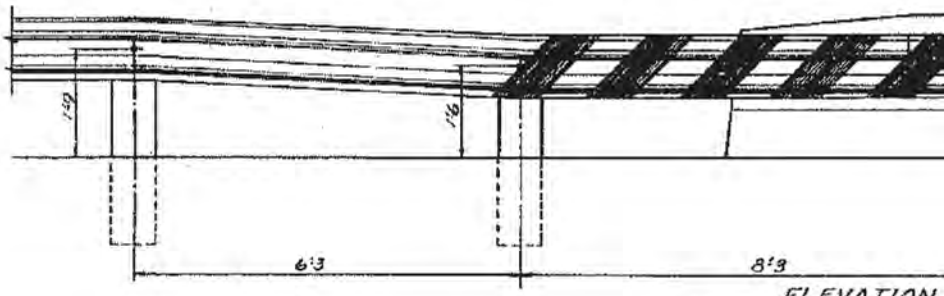


ELEVATION

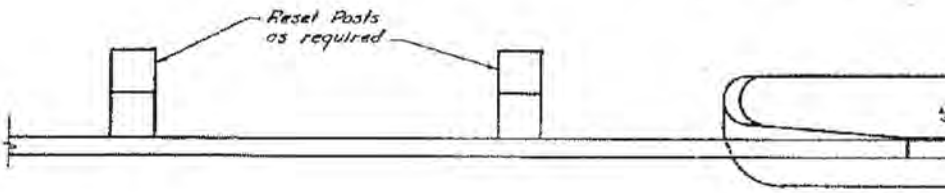


PLAN
Exit End

**FOR INFORMATION ONLY**

DGN Files IP PWPlans16721\4433-F-13-13a-forinfaction
02-MAY-2005

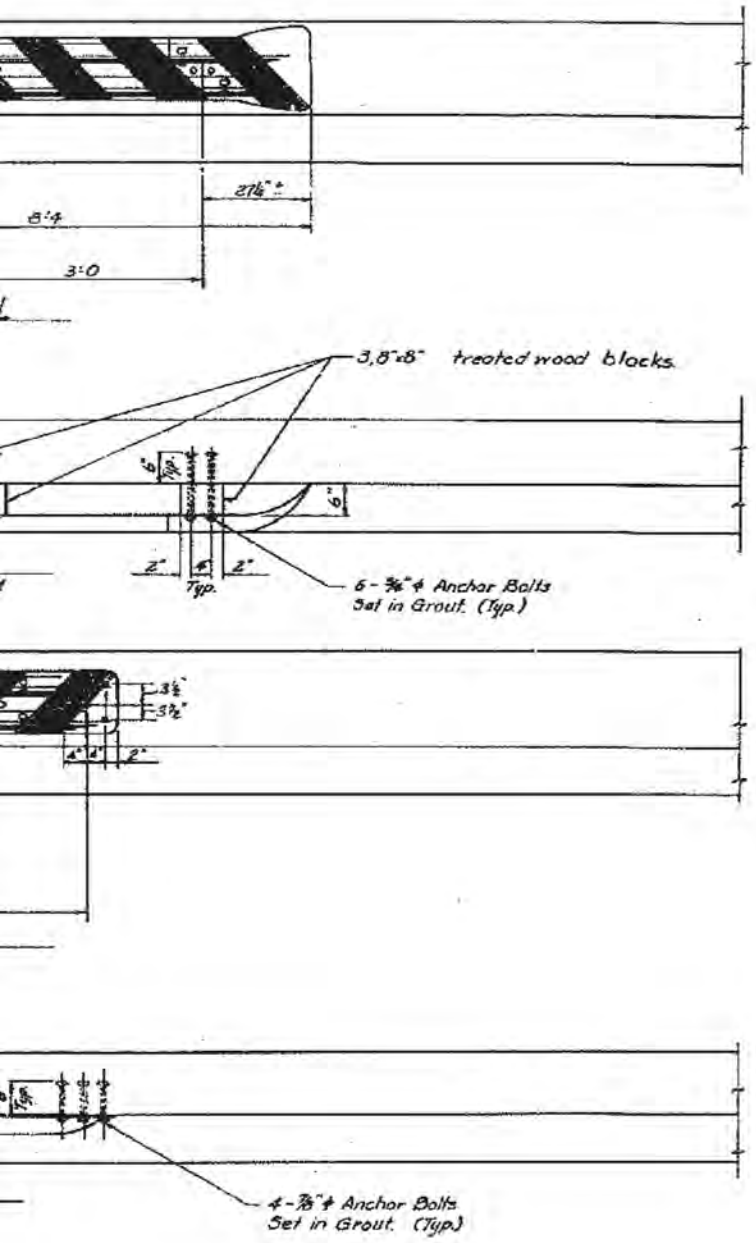


1 Stripes shall be alternate black and white 6" wide at an angle of 45°. The 6" stripes shall be reflectorized and slope downward in the direction of traffic.
2 All anchor bolts shall be ¾"ϕ bolts A.S.T.M. A307.
3 All bolts shall be galvanized in accordance with A.S.T.M. A153-65.
4 For post and rail details see std. dwgs no. 735-1 & 735-5.
5 Drilling holes, placing, and grouting of bolts is included in structural steel.

UTAH STATE DEPARTMENT OF HIGHWAYS
SALT LAKE CITY, UTAH
STRUCTURES DIVISION

OREM 800 NO. INTERCHANGE

GUARDRAIL ATTACHMENT

| | | | |
|---|---|---|---|
| DESIGNED C.D.C. 7-29-69 | CHECKED | | I-15-6(66)267 PROJECT NUMBER |
| DRAWN N.D. 7-29-69 | CHECKED C.D.C. 7-29-69 | | |
| QUANT. N.D. 7-29-69 | CHECKED C.D.C. 7-29-69 | | 582+90.37 STATION |
| ENGINEER 7-29-69 DATE | | | UTAH COUNTY |
| APPROVED 7-30-69 DATE | | | |
| BR. NO. | DRG. NO. F-13 | | 13 OF 13 |

| NO. | BY | DATE | REMARKS |
|---|---|---|---|
| | | | |

REVISIONS

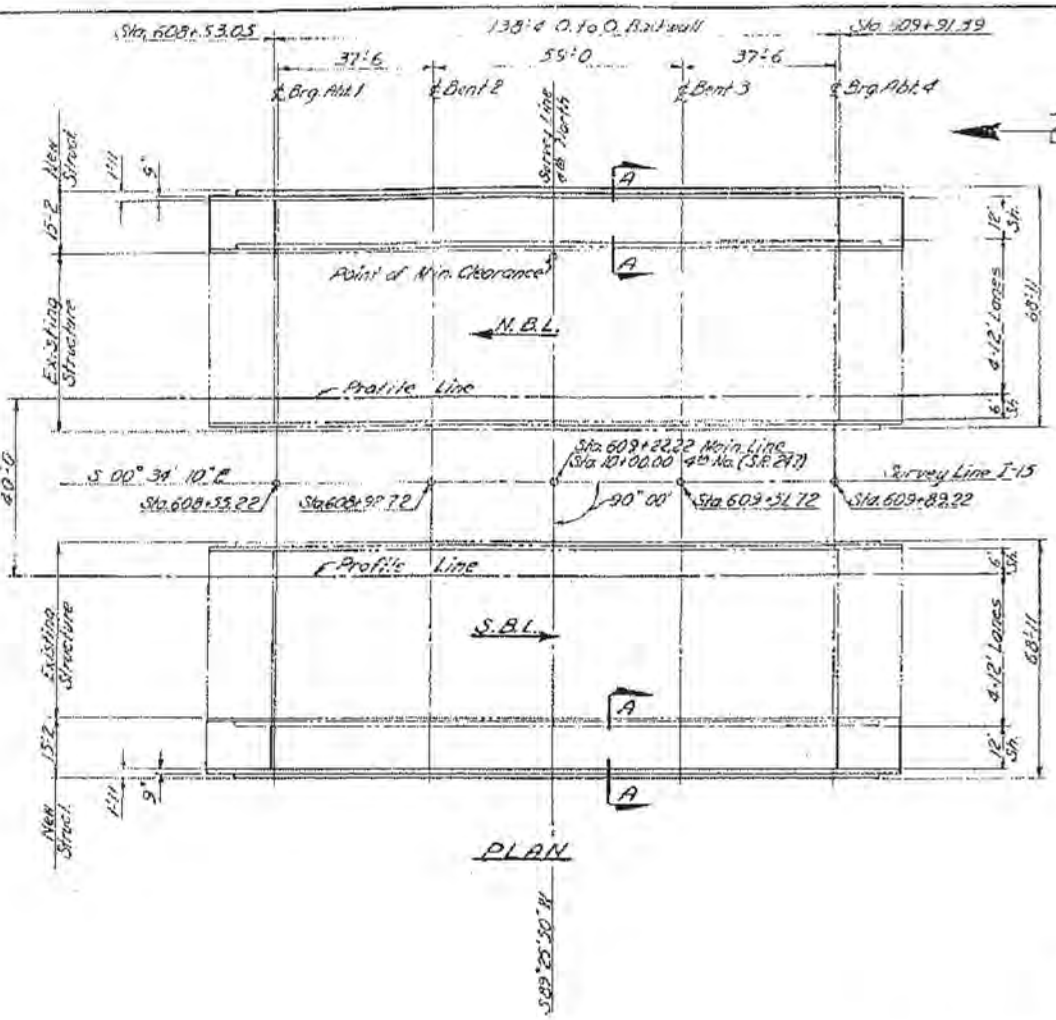


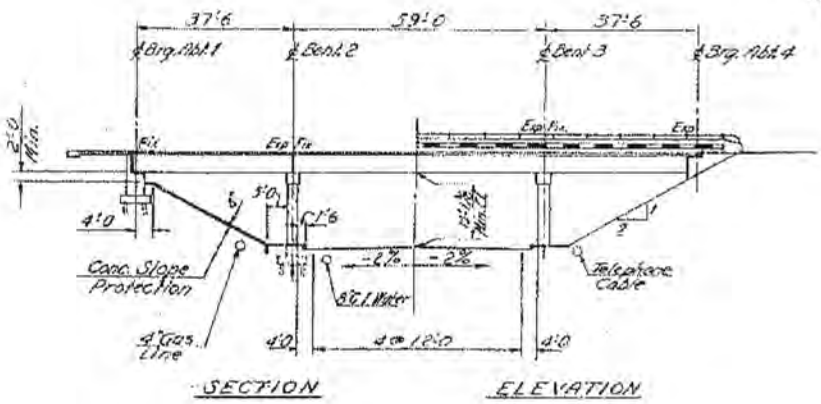


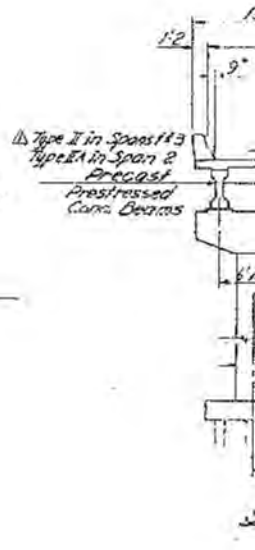


Approximate Pile Tip Elevation 4575.00

1 - Sl
2 - Fo
3 - AB
4 - Bo
5 - De
6 - Pr
7 - Pr
8 - Pre
9 - Pro

DGN File: 18_PlaPlans\1672\4433_E-14w-01_Foundation

RS-HWY-2685

**FOR INFORMATION ONLY**

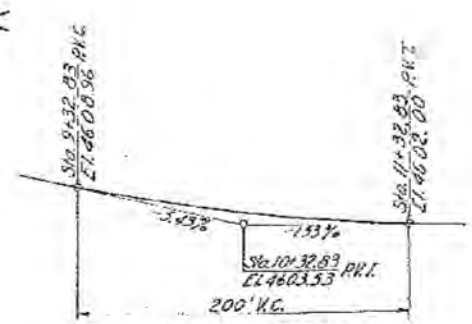


400 NORTH PROFILE

I-15 PROFILE

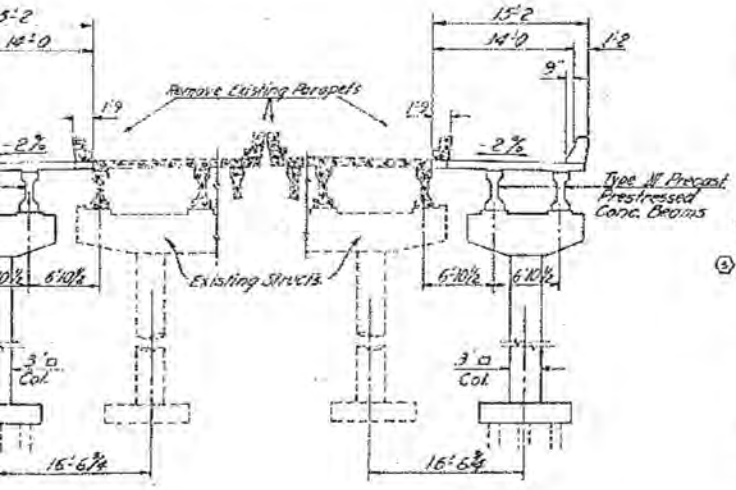


SECTION A-A

SECTION A-A

## GENERAL NOTES

1 - Materials, construction and workmanship shall be in accordance with the Utah Department of Highways Standard Specifications for Road and Bridge Construction, Interim Issue March 1968, and Supplements thereto which are in effect of the date of request for bids.

2 - All reinforcing steel shall be deformed billet-steel bars conforming to ASTM designation A 615-68, Grade 40.

3 - All structural steel shall be structural carbon steel conforming with A.A.S.H.O. designation M-183 (ASTM A-36) except where noted otherwise.

4 - Exposed concrete corners shall be chamfered ¾" except where noted otherwise.

5 - Cover to reinforcing steel shall be 2" except where noted otherwise.

## DESIGN DATA

HS 20-44 or Interstate Alternate Loading in accordance with A.A.S.H.O. Specifications of 1965 and Interim Specifications.

Cast-in-place Concrete: f'c = 3,000 p.s.i., fs (Reinf.) = 20,000 p.s.i.
f'c = 1,200 p.s.i., n = 10

Prestressed Concrete: f'c = 5,000 p.s.i., fs (Non-prestressed) = 20,000 p.s.i., n = 6

Structural Steel: fs = 20,000 p.s.i.

Wearing Surface: (2) △ 2" Concrete. 15 lbs/sq. ft. future surface.

## QUANTITIES

| ITEM | ESTIMATED | UNIT | AS CONST. |
|---|---|---|---|
| Excavation for Structures | 93 | Cu. Yds | 205.20 |
| (2) Class AA Concrete (AE) | 226 | Cu. Yds | 226.00 |
| Class A Concrete (AE) | 184 | Cu. Yds | 184.00 |
| (3) △ Reinforcing Steel | 59,162 | Lbs | 58,549.00 |
| Structural Steel | 1200 | Lbs | — |
| Metal Railing (Single Rail) | 679 | Lin. Ft. | 679.00 |
| Piles (other than timber) | 1753 | Lin. Ft. | 1,325.62 |
| Concrete Slope Protection | 1520 | Sq. Yds | 1,637.80 |
| Select Granular Backfill | 40 | Cu. Yds | 33.50 |
| Prestressed Conc. Member Type II (38'-1 Long) | 6 | Each | 6.00 |
| Prestressed Conc. Member Type IIA (38'-10 Long) | 2 | Each | 2.00 |
| Prestressed Conc. Member Type III (38'-10 Long) | 2 | Each | 2.00 |
| Prestressed Conc. Member Type III (38'-1 Long) | 2 | Each | 2.00 |
| Elastomeric Brg. Pad 1" Thick | 24 | Sq. Ft. | 20.22 |
| Remove Existing Structures for Widening | 1 | Lump | 1.00 |

## INDEX OF SHEETS


tuation & Layout
undation Plan
utment Details N.B.L. & S.B.L.
nt Details N.B.L. & S.B.L.
k Plan & Sections - Frame Plan
estressed Beam Details B-1
estressed Beam Details B-2
estressed Beam Details B-3
estressed Beam Details B-4
10 - Parapet Details
11 - Railing Details
12 - Concrete Slope Protection
13 - Concrete Pile Details
14 - Reinforcing Steel Schedule


| NO. | BY | DATE | REMARKS |
|---|---|---|---|
| (0) | R.M.C. | 2-13-70 | Rebar Quantities |
| △ | W.M.B. | 12-29-69 | Changes in Rebar quantities |
| (2) | R.M.C. | 9-12-69 | Design Data - Quantities |
| △ | H.L.A. | 9-8-69 | Design Data - Beam Type |

REVISIONS

UTAH STATE DEPARTMENT OF HIGHWAYS
SALT LAKE CITY, UTAH
STRUCTURES DIVISION

NORTH LEHI - SOUTH PROVO
U-4 (I-15) OVER 400 No. ST. IN OREM (WIDENING)
SITUATION & LAYOUT

| | | | |
|---|---|---|---|
| DESIGN N.O.D. 2-68 | CHECK M.W. 7-15-69 | I-15-6 (66) 267 | PROJECT NUMBER |
| DRAWN H.L.A. 4-3-69 | CHECK T.J.T. 6-16-69 | | |
| DUPNE. H.L.A. 7-7-69 | CHECK W.M.B. 7-7-69 | 609+22.22 | STATION |
| APPROVAL RECOMM. 7-29-69 DATE | Wm. B. Wiley Highway Engineer | UTAH | COUNTY |
| APPROVED 7-30-69 DATE | Kay T. Stevens Highway Director | | |

B.R. NO. ____ BRIDGE NO. F-14 W

1 of 14

Final: Kam ch. April 1 '71.

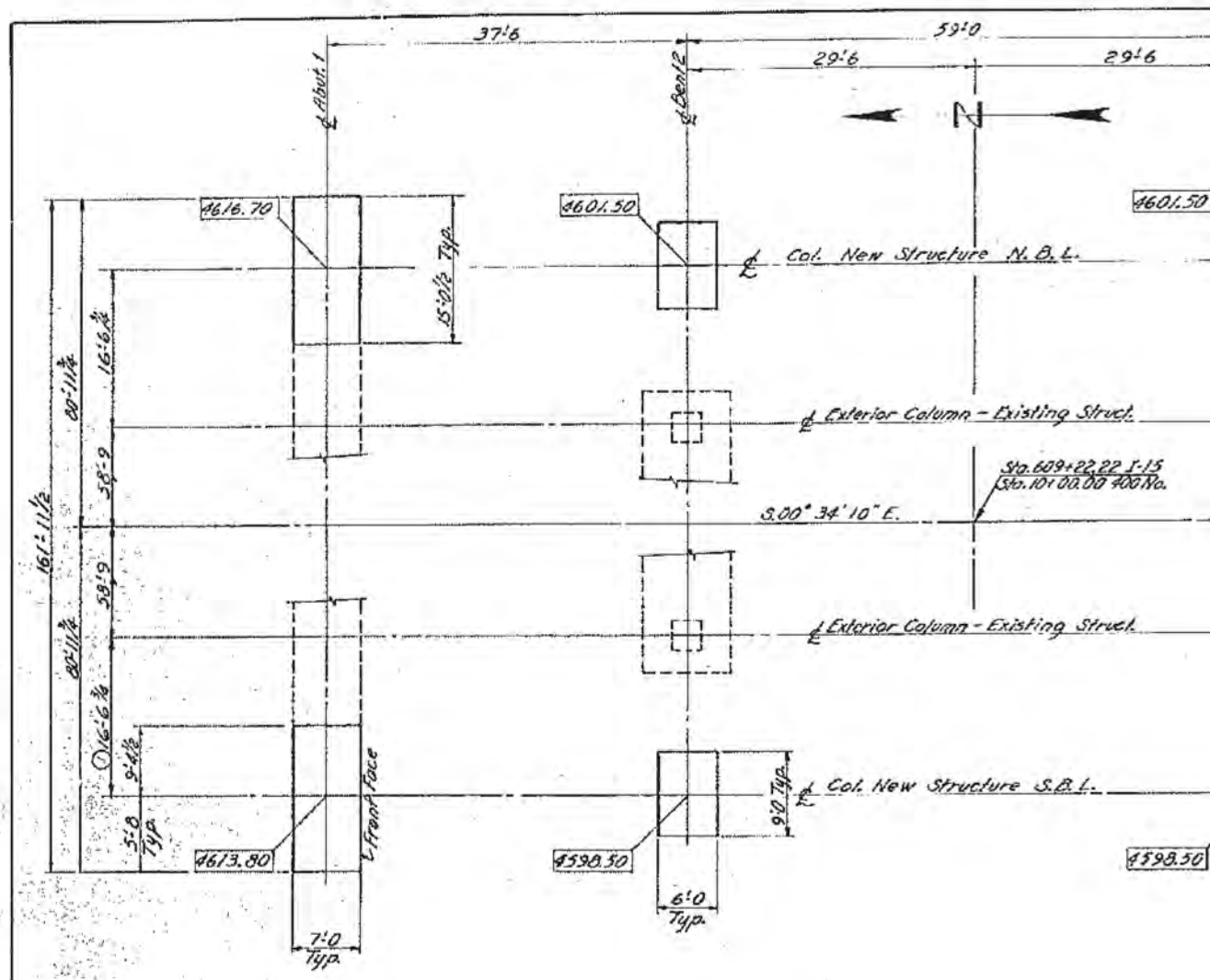


FOR INFORMATIO

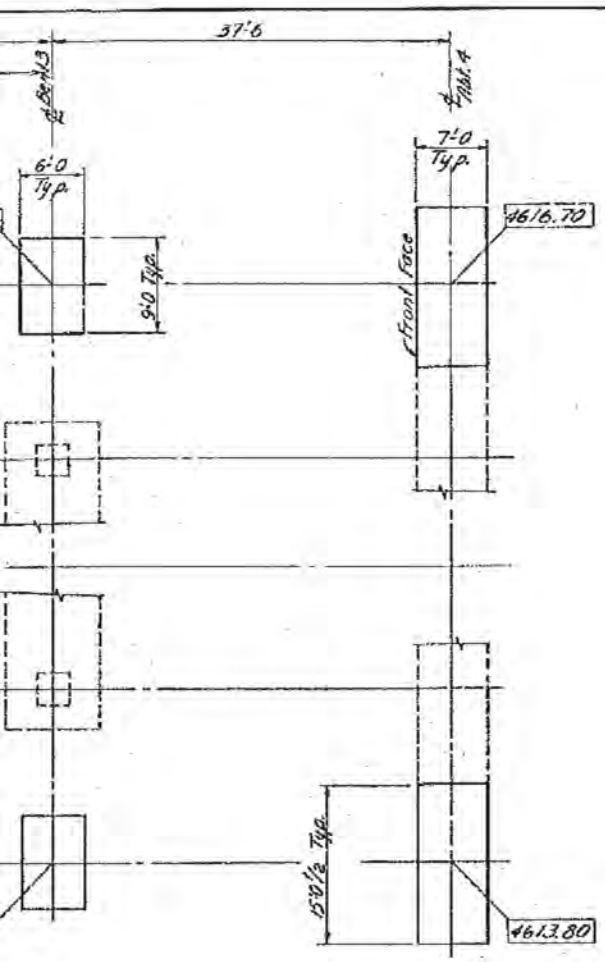


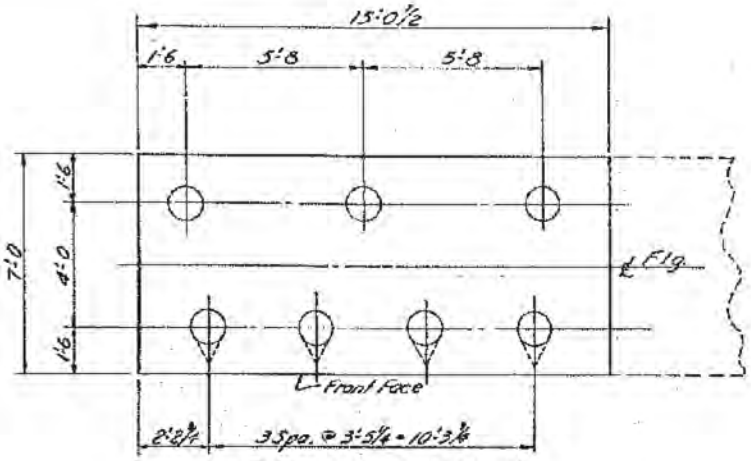


PILE LAYOUT IN ABUT'S.

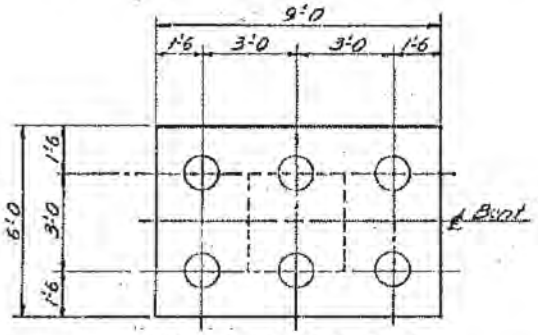


PILE LAYOUT IN BENTS

NOTES:

1 - Maximum allowable pile design load is 60 Kips-D.L.+L.L.

2 - See sheet No. 13 for cast-in-place Conc. Pile details.

3 - Piles shown thus ⊕ shall be battered 6:1 in direction indicated unless otherwise shown.

4 - Tip elevations given are approx. only and will be verified at the time of construction in accordance with the specifications.

5 - Elevations of bottom of footing are shown enclosed in rectangles. e.g. 4610.25

6 - Abutments and bents are parallel to 400 North.

COMPUTED PILE LOADS (KIPS)

| ABUTMENTS | | | | | BENTS | | |
|---|---|---|---|---|---|---|---|
| | Rear | | Front | | | | |
| Loading | V | H | V | H | Loading | V | H |
| Dead | 31 | — | 39 | 7 | Dead | 41 | — |
| Grp. I | 35 | — | 53 | 9 | Grp. I | 50 | — |
| B.Grp. II | — | — | — | — | B.Grp. II | 44 | — |

| NO. | BY | DATE | REMARKS |
|---|---|---|---|
| 1 | RMC | 9-11-69 | Dimensions |

REVISIONS

UTAH STATE DEPARTMENT OF HIGHWAYS
SALT LAKE CITY, UTAH
STRUCTURES DIVISION

NORTH LEHI - SOUTH PROVO
U-(15) OVER 400 No. ST. IN OREM (WIDENING)
FOUNDATION PLAN

| | | | |
|---|---|---|---|
| DESIGN AOB 8-68 | CHECK MWL 7-15-69 | I-15-6(66)267 | PROJECT NUMBER |
| DRAWN W.L.A. 3-22-69 | CHECK Wm B 6-20-69 | | |
| QUANT. W.L.A. 3-22-69 | CHECK Wm B 6-20-69 | 609+22.22 | STATION |
| APPROVAL RECOMM. 7-29-69 DATE | Wm. B. Wilson ENGINEER | UTAH | COUNTY |
| APPROVED 7-29-69 DATE | Ray J. Stalling ENGINEER OF PROFESSIONAL ENG. & A. | | |
| DR. T.O. | DWG. NO. F-14W | 2 OF 14 | |

ON ONLY

NOTE:
Remove Parapets & Concrete in Footings, Backwalls and Approach Slabs at Break Line.
Expose Steel for splicing with new reinforcing steel.

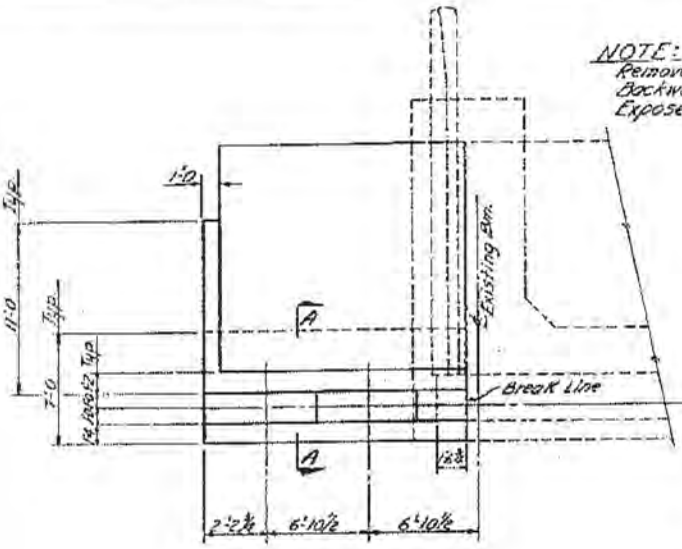


PLAN ABUT. 1 S.B.L.
Abut. 4 Similar

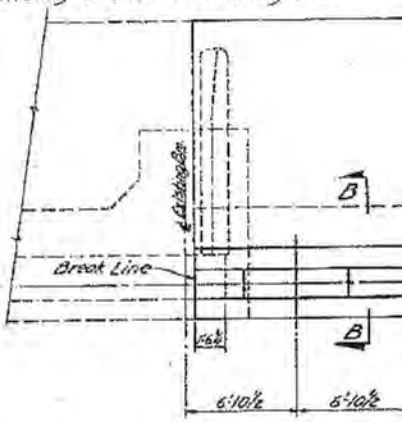


PLAN ABUT. 1 N
Abut. 4 Similar

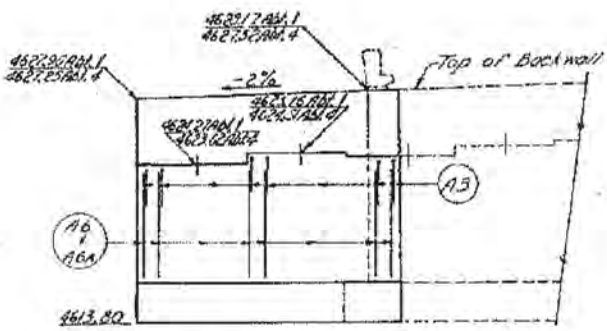


ELEVATION

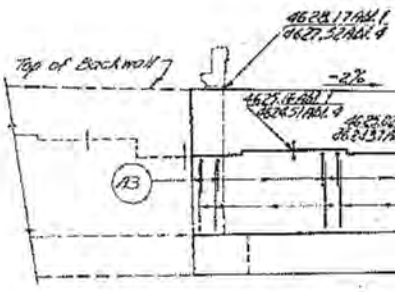


ELEVATIO

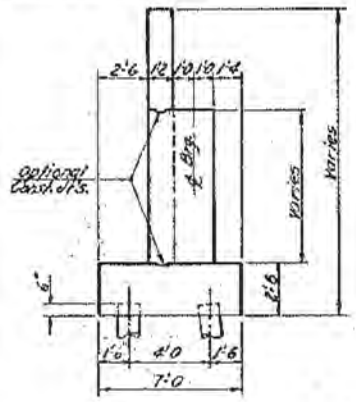


SECTION A-A
(Dimensions & Reinforcing)

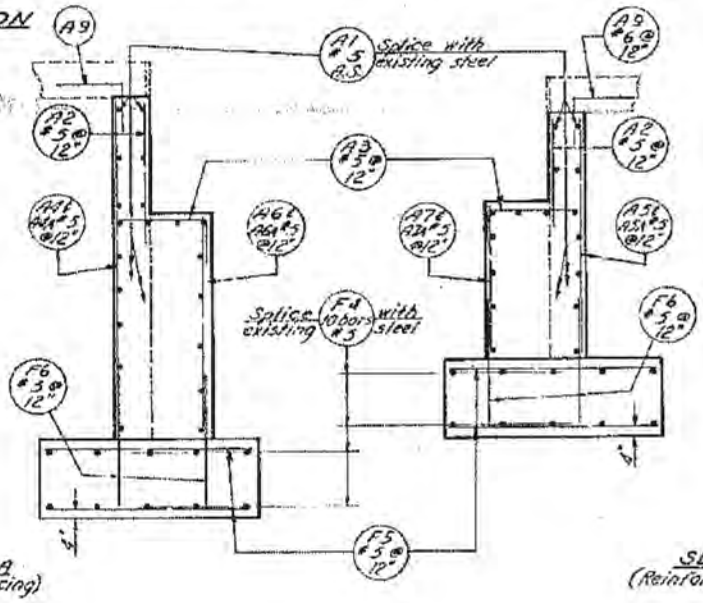


SECTION
(Reinforcing & Dimen

NOTE:
Bridge Seat bearing area (2" larger than bearing pad or masonry plate) shall be finished high and rubbed or ground level to elevation shown within ± 1/16". No Grouting.

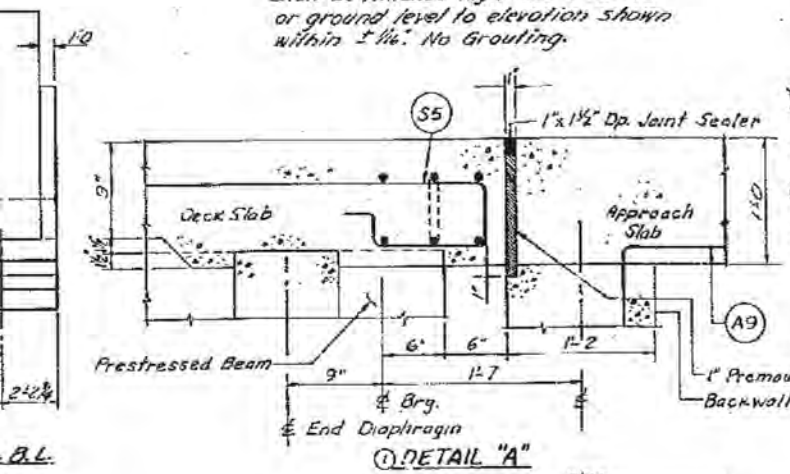


① DETAIL "A"

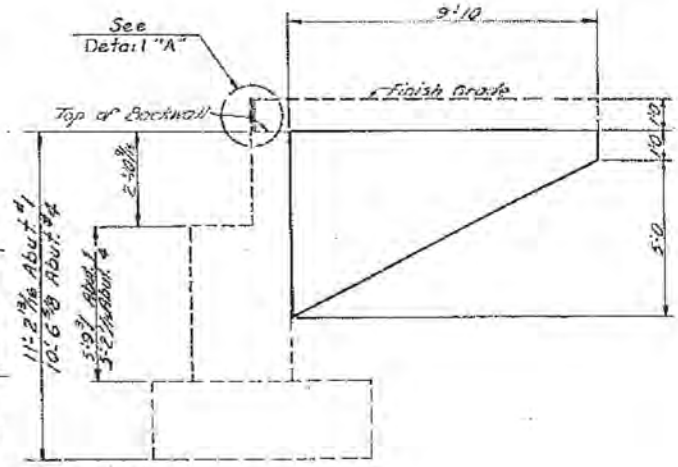


WING WALL N.B.L.
Reinforcing Same as S.B.L.

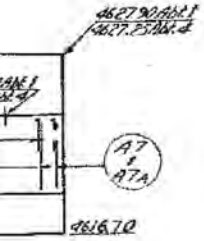


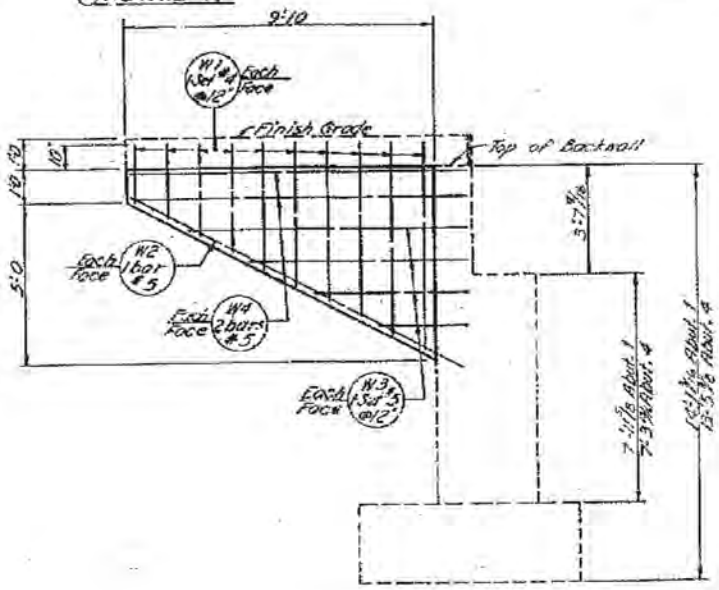


WING WALL S.B.L.

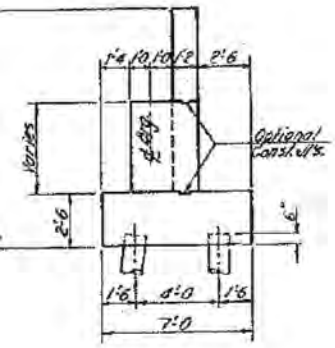


**FOR INFORMATION ONLY**

| CONCRETE QUANTITIES (Cu. Yd.) | |
|---|---|
| Location | Class A |
| Back Wall | 25.9 |
| Pedestal | 36.7 |
| Wing Wall | 5.1 |
| Footing | 39.0 |
| Total | 106.7 |

| NO. | BY | DATE | REMARKS |
|---|---|---|---|
| 1 | PMC | 9-12-68 | Detail "A" |

REVISIONS

UTAH STATE DEPARTMENT OF HIGHWAYS
SALT LAKE CITY, UTAH
STRUCTURES DIVISION

NORTH LEHI - SOUTH PROVO
U-1(15) OVER 400 No. St. IN OREM (WIDENING)
ABUTMENT DETAILS N.B.L. & S.B.L.

DESIGN C.D.C. 4-29-68 CHECK MW 7-15-68 F-15-6(66)267 PROJECT NUMBER
DRAWN N.L.B. 5-13-68 CHECK Wm.B. 7-17-68
QUANT. N.L.B. 5-14-68 CHECK Wm.B. 7-17-68 609+22.22 STATION
APPROVAL RECOMM. 7-29-69 DATE Oscar S. Wolz ENGINEER OF BRIDGES UTAH COUNTY
APPROVED 7-30-69 DATE Ray J. Wahlberg DIR. STRUCTURAL ENG.

B.R. NO.
DRG. NO. F-14 W
3 of 14

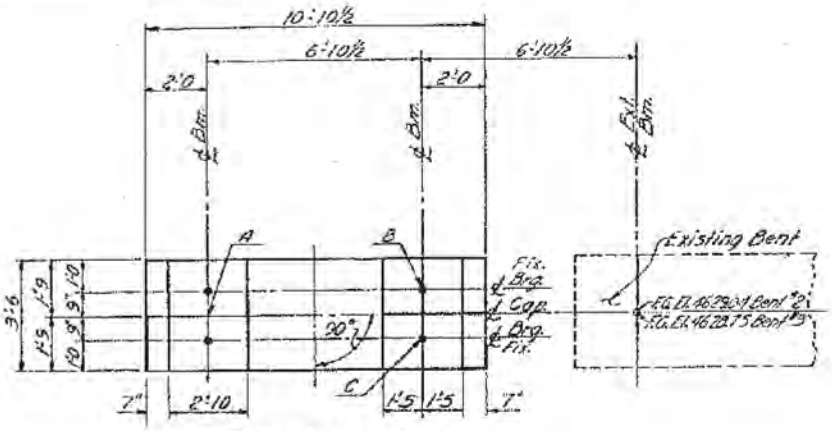


CAP-BENT No. 2 S.B.L.
Bent No. 3 Similar

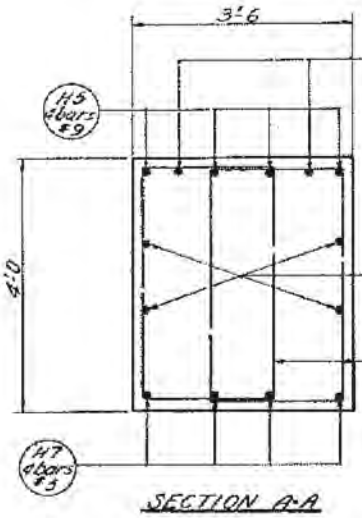


SECTION A-A

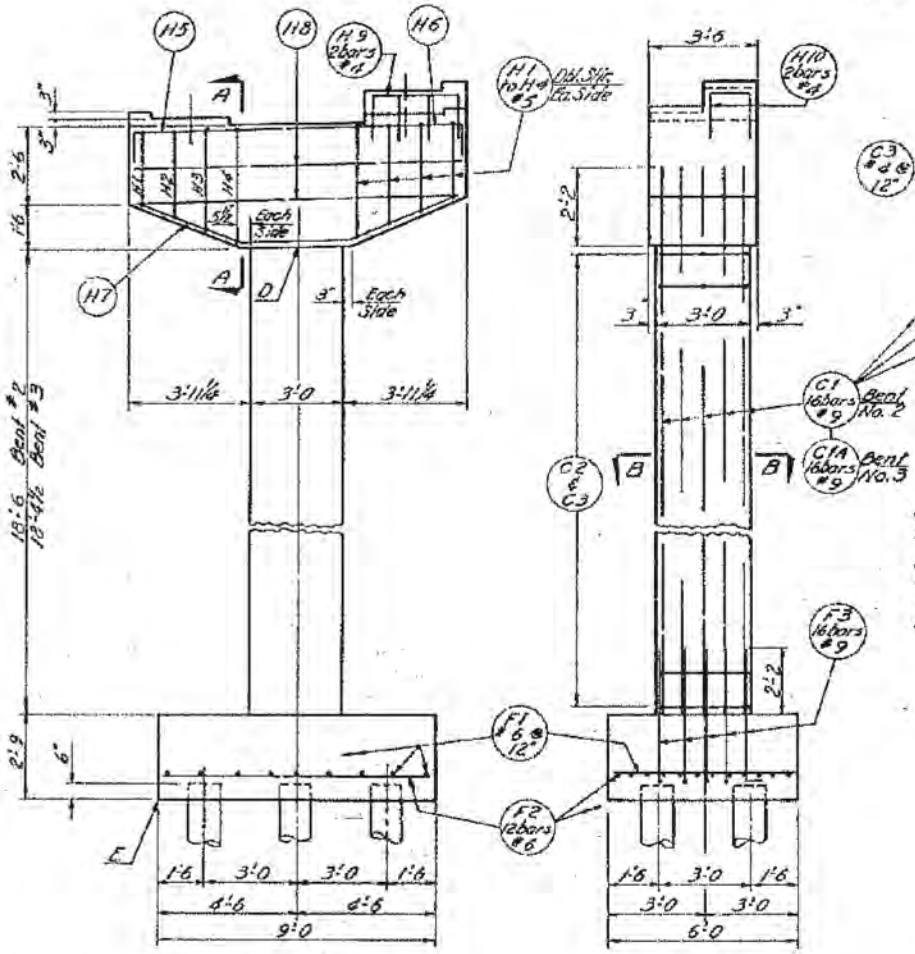


ELEVATION

END VIEW

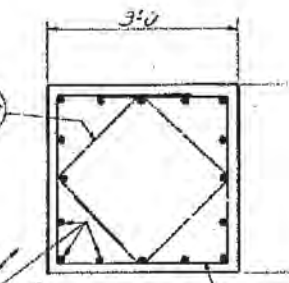


SECTION B-B

Bridge Seat bearing area (2
than bearing pad or mas
plate) shall be finished f
rubbed or ground level
elevation shown within ±
No Grouting.

| CONCRETE QUAN | |
|---|---|
| Location | Cl |
| Cap | |
| Column | |
| Footing | |
| Total | |

| TABLE OF ELEVA | | | |
|---|---|---|---|
| Point | S. B. L. | | M |
| | Bent #2 | Bent #3 | Bent |
| A | 4624.09 | 4623.80 | 4624. |
| B | 4624.30 | 4623.34 | 4624. |
| C | 4624.23 | 4624.69 | — |
| D | 4619.91 | 4619.62 | 4620. |
| E | 4598.50 | 4598.50 | 4601. |

DGN Files IPL PWBridge\1672\4433_F-14w-R5-Form\Footing
02-MAY-2005

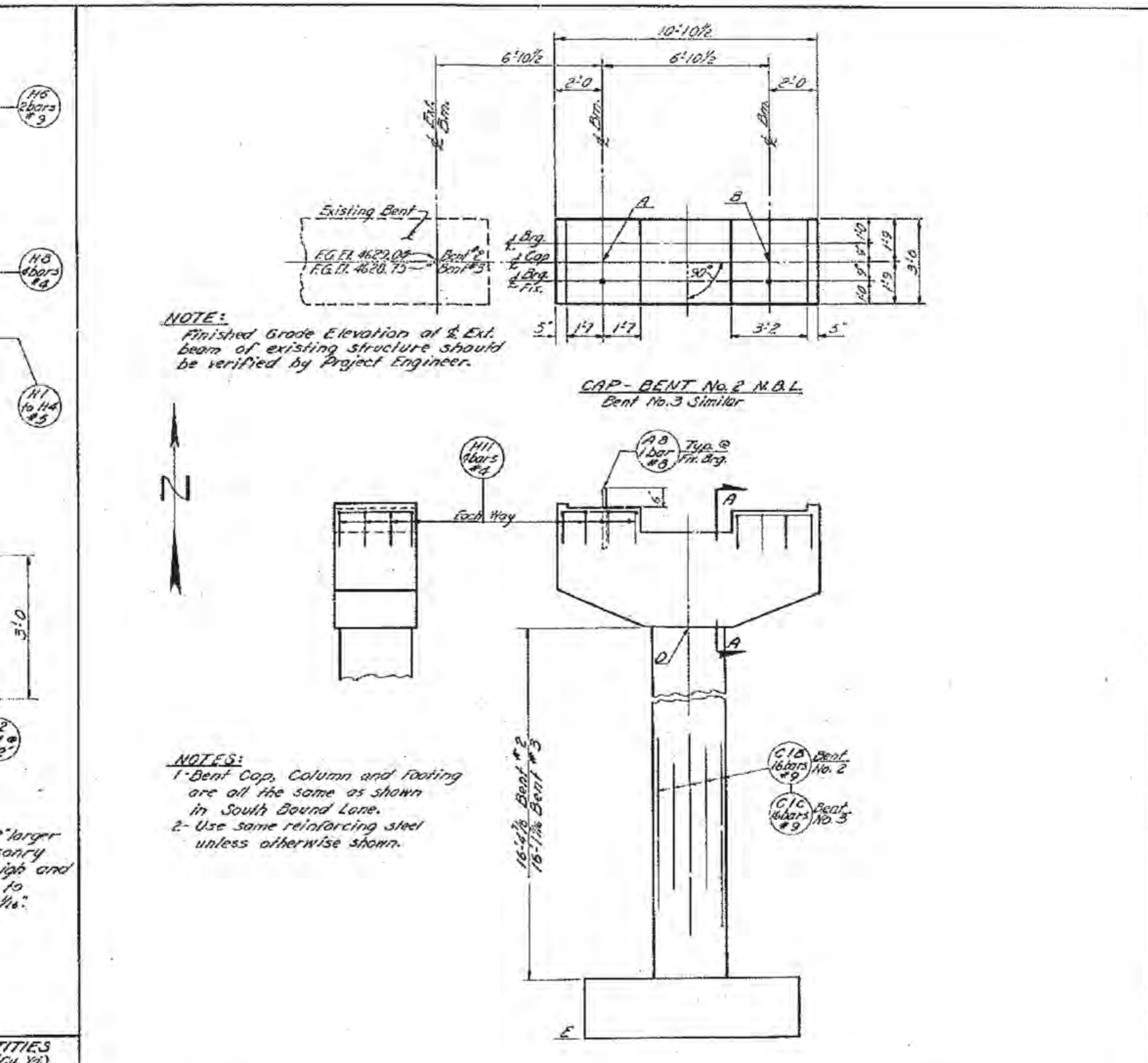


| | |
|---|---|
| ...TITIES (Cu. Yd.) | |
| ...ss A | |
| ...9.6 | |
| ...23.2 | |
| ...22.0 | |
| ...54.8 | |
| ...TIONS | |
| ...B. L. | |
| ...2 | Bent #3 |
| ...98 | 4624.69 |
| ...84 | 4624.55 |
| — | — |
| ...56 | 4620.37 |
| ...50 | 4601.50 |

**FOR INFORMATION ONLY**

| NO. | BY | DATE | REMARKS |
|---|---|---|---|
| | | | |

REVISIONS

UTAH STATE DEPARTMENT OF HIGHWAYS
SALT LAKE CITY, UTAH
STRUCTURES DIVISION

NORTH LEHI - SOUTH PROVO
I-15 (I-15) OVER 400 No. St. IN OREM (WIDENING)
BENTS - S.B.L. & N.B.L. - DETAILS

| | | | |
|---|---|---|---|
| DESIGN AOB 8-68 | CHECK MJ 7-15-69 | I-15-6(66)267 | PROJECT NUMBER |
| DRAWN W.L.B. 4-18-69 | CHECK Wm.B. 6-17-69 | 609+22.22 | STATION |
| QUANT. W.L.B. 4-21-69 | CHECK Wm.B. 6-17-69 | UTAH | COUNTY |
| APPROVAL 7-29-69 | Chas. D. Kay | | |
| APPROVED 7-29-69 | [signature] | | |
| BR. NO. | DWG. NO. F-14 W | 4 of 14 | |

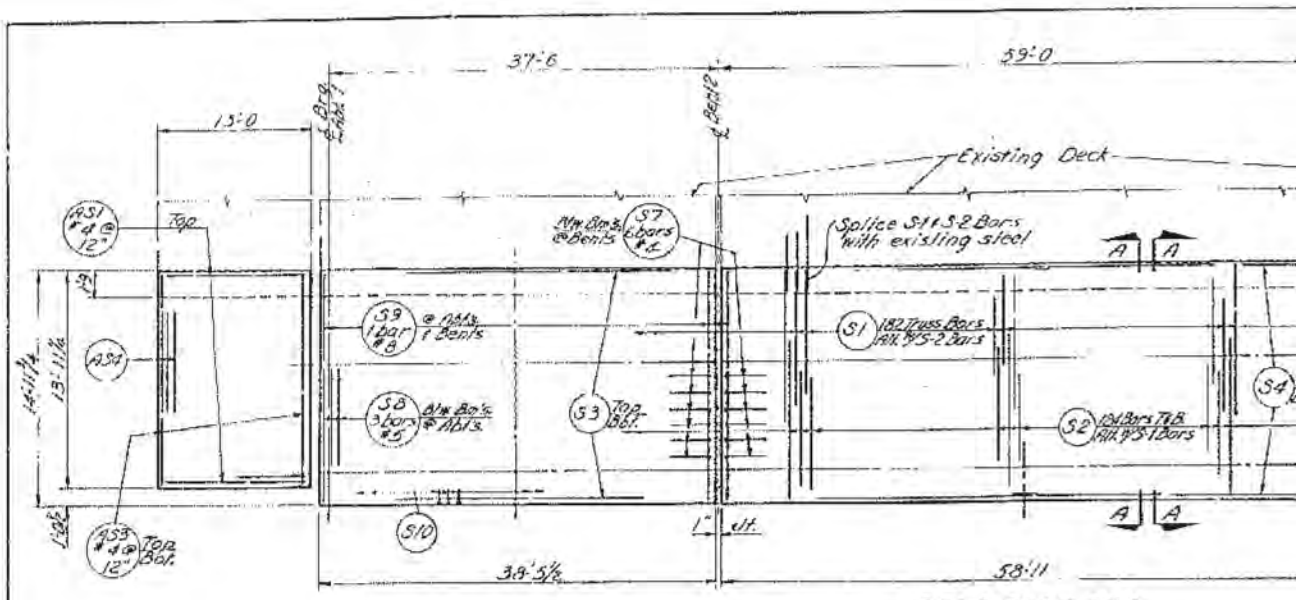


DECK PLAN S.B.L.
N.B.L. Similar

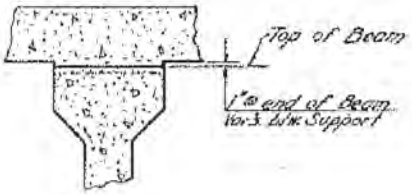


CAMBER STRIP DETAIL

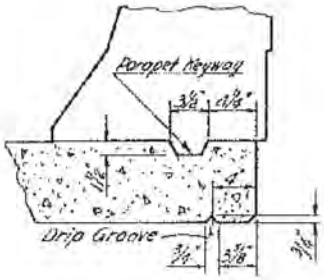


DETAIL "E"

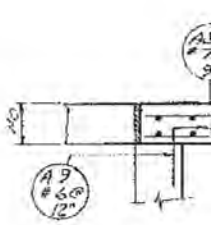

N

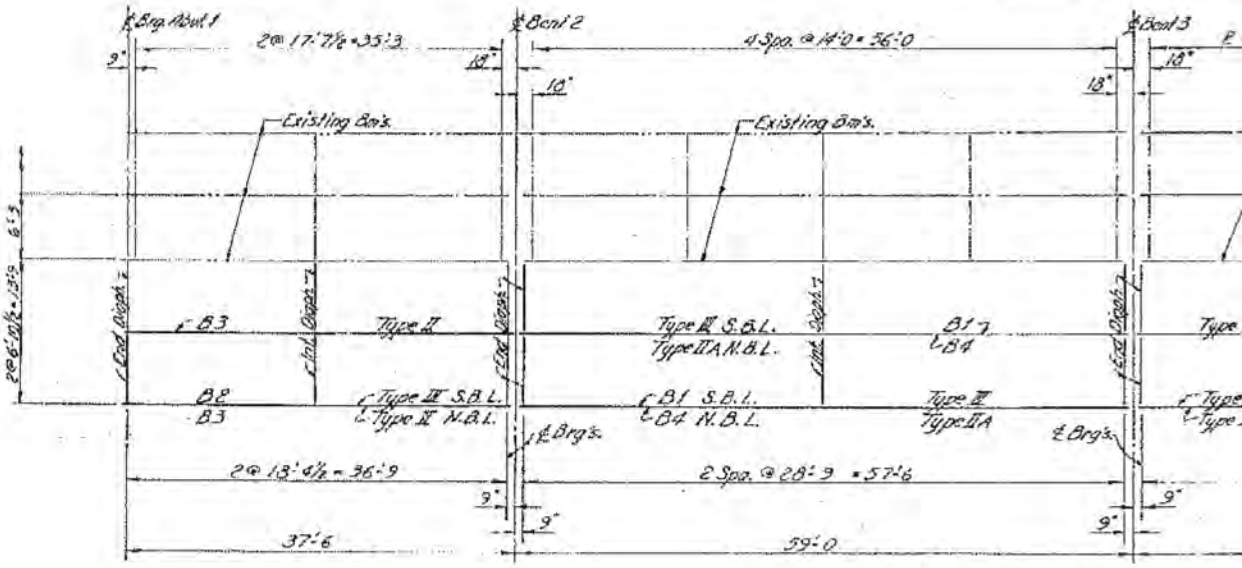


FRAMING PLAN S.B.L.
N.B.L. Similar

**FOR INFORMATION ONLY**

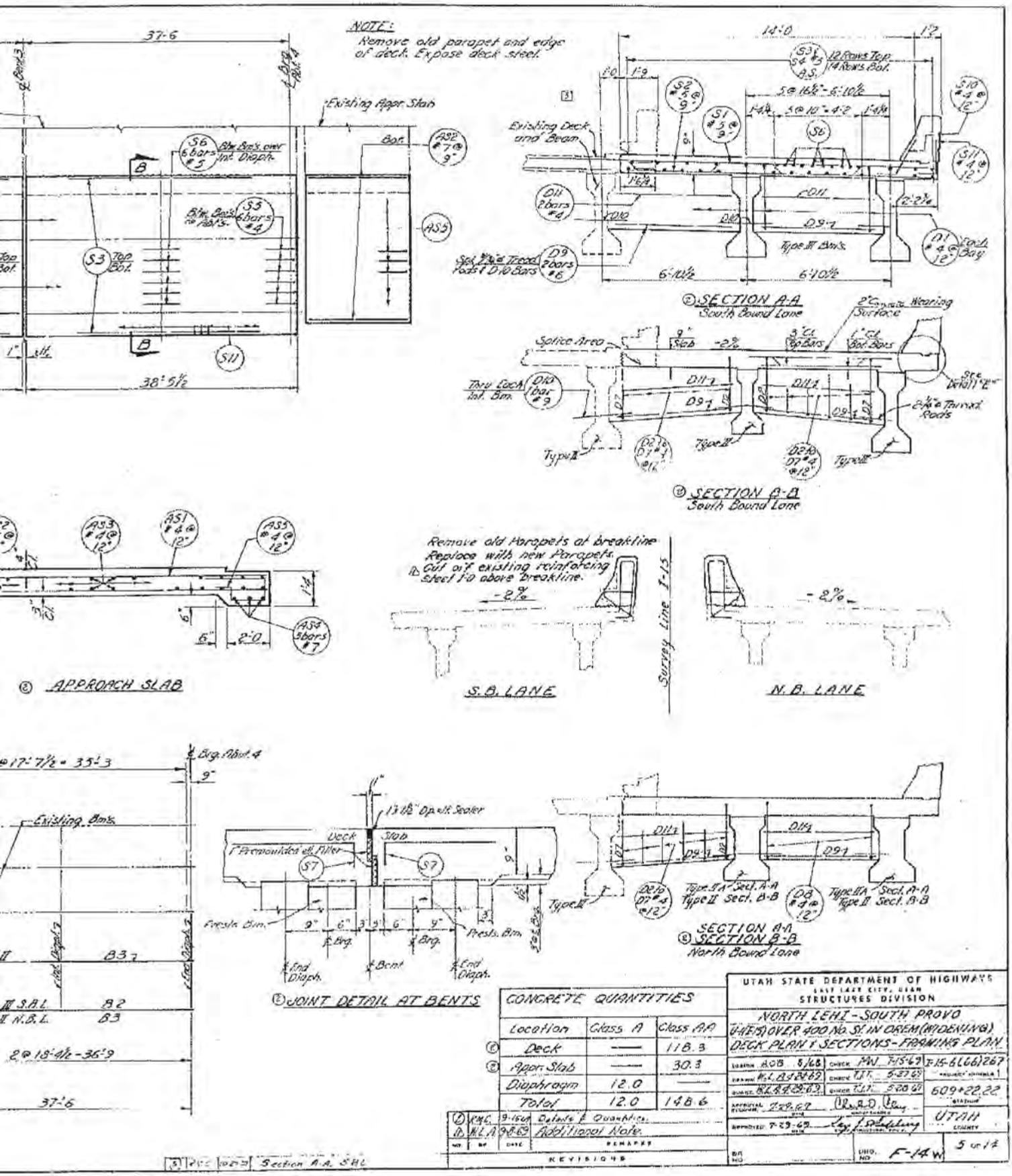


| CONCRETE QUANTITIES | | |
|---|---|---|
| Location | Class A | Class AA |
| Deck | — | 118.3 |
| Appr. Slab | — | 30.3 |
| Diaphragm | 12.0 | — |
| Total | 12.0 | 148.6 |

| NO. | BY | DATE | REMARKS |
|---|---|---|---|
| 2 | KMC | 9-16-69 | Details & Quantities |
| 1 | W.L.A. | 9-8-69 | Additional Note |

REVISIONS

UTAH STATE DEPARTMENT OF HIGHWAYS
SALT LAKE CITY, UTAH
STRUCTURES DIVISION

NORTH LEHI - SOUTH PROVO
U-I(15) OVER 400 No. St. IN OREM (WIDENING)
DECK PLAN & SECTIONS - FRAMING PLAN

| | | | |
|---|---|---|---|
| DESIGN A.O.B. 5/68 | CHECK M.N. 7-15-69 | F-15-6(66)267 | |
| DRAWN W.L.A. 8-28-69 | CHECK T.T.T. 5-27-69 | PROJECT NUMBER | |
| QUANT. W.L.A. 8-28-69 | CHECK T.T.T. 5-28-69 | 609+22.22 | STATION |
| APPROVED 7-29-69 | | UTAH | COUNTY |
| APPROVED 7-23-69 | | | |

BR. NO. | DWG. NO. F-14 W | 5 of 14

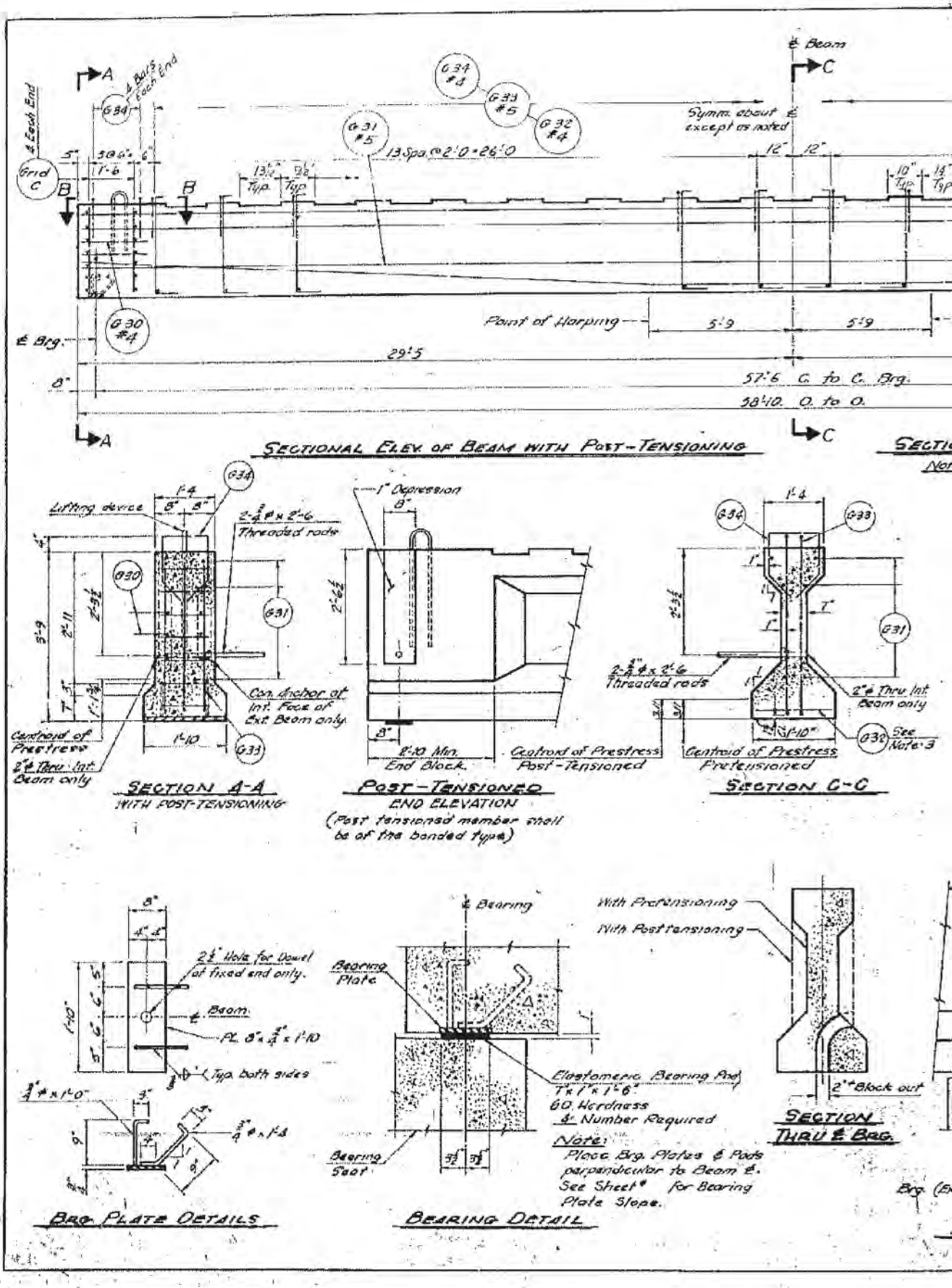


**FOR INFORMATION ONLY**

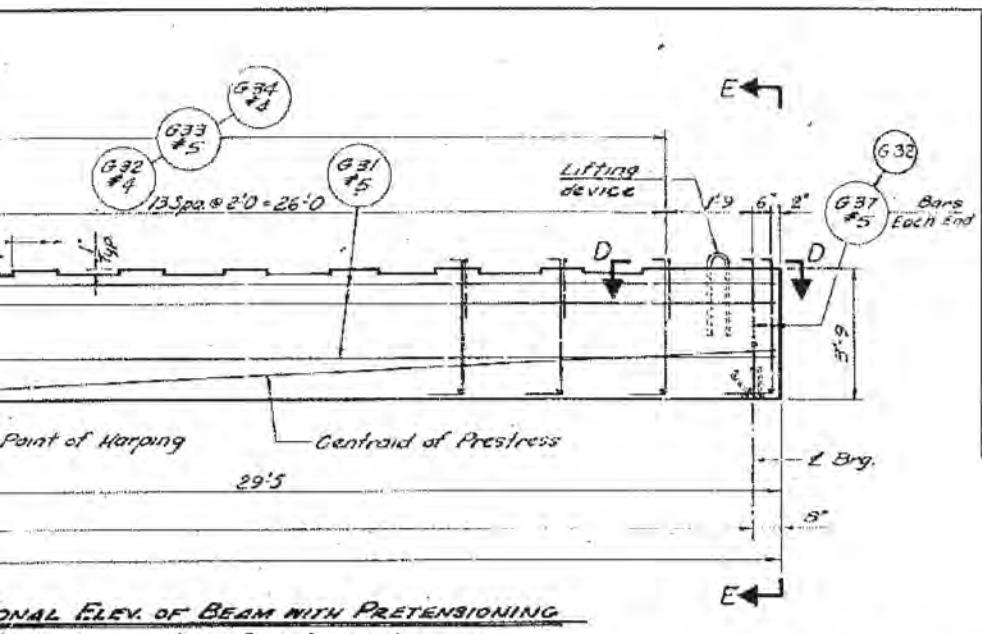


## REINFORCING BAR SCHEDULE

| Mark | Size No. | Lgth | SKETCH |
|---|---|---|---|
| G30 | 4 | 2'-6 | |
| G31 | 5 | | |
| G32 | 4 | 1'-6 | |
| G33 | 5 | 5'-1 | 3" 4'-0 10" |
| G34 | 4 | 4'-3 | 11" 7½" 1'-2 1" |
| G35 | 5 | 1'-2 | |
| G36 | 5 | 3'-4 | |
| G37 | 5 | 4'-6 | 3" 4'-0 3" |

Notes:

1- Unless otherwise shown, all dimensions are out to out of bars.

2- Threaded Rods to be furnished by Beam fabricator.

## ONAL ELEV. OF BEAM WITH PRETENSIONING

Note: Prestressing strand for pretensioned members shall not exceed 7/16" diameter.

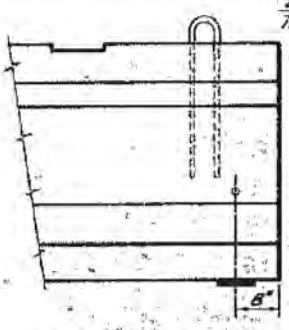


**PRETENSIONED**
END ELEVATION

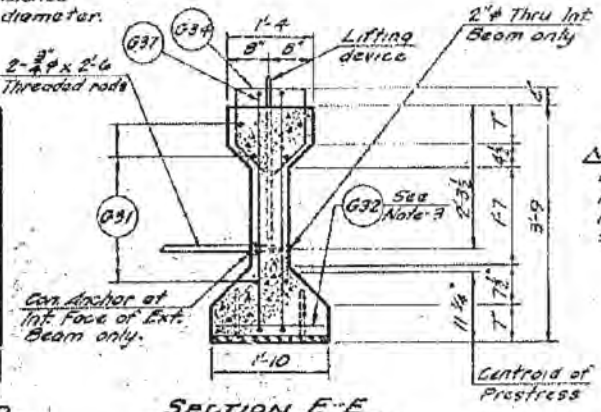


**SECTION E-E**
WITH PRETENSIONING

Note-3
Bar (G32) shall be placed immediately above lower row of prestressing strands.

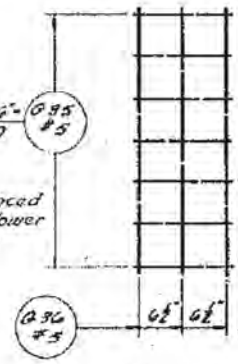


**GRID-C**

8"x 1"x 2'-6½ Depression. Both sides of Int. Beam and Int. face only of Ext. Beam.

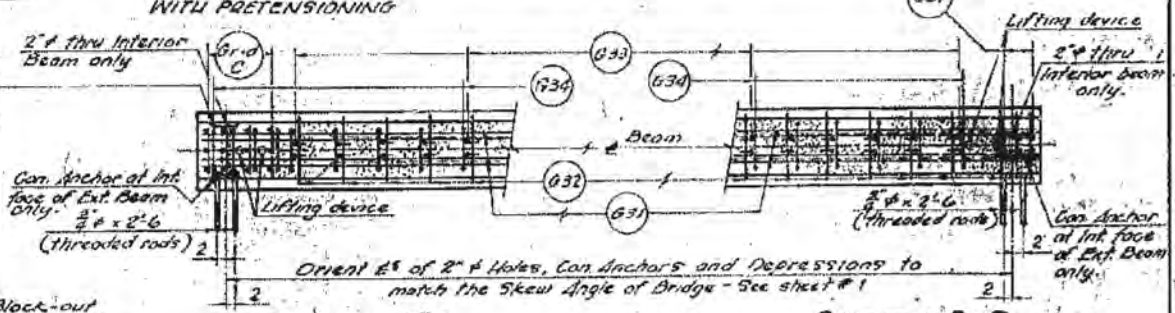


**SECTION B-B**
END BLOCK DETAILS
WITH POST-TENSIONING

**SECTION D-D**
END DETAILS WITH PRETENSIONING

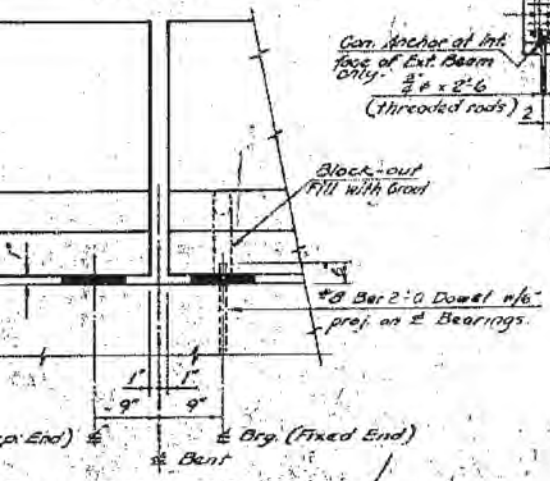


**BEAM BEARING DETAILS**

A.A.S.H.O. Type III Beam
Final prestressing forces after losses.
Pretensioned = 388 Kips
Posttensioned = 413 Kips
f'ci Pretensioned = 4000 p.s.i.
f'ci Posttensioned = 4000 p.s.i.
1 Exterior Beams required. B1
1 Interior Beams required. B1
Min. Area Prestressing Steel = 1.68" sq. in.

| | | | |
|---|---|---|---|
| UTAH STATE DEPARTMENT OF HIGHWAYS SALT LAKE CITY, UTAH STRUCTURES DIVISION | | | |
| NORTH LEHI-SOUTH PROVO | | | |
| HILLS OVER 400 No. ST. IN OREM (WIDENING) | | | |
| PRESTRESSED BEAM DETAILS B1 | | | |
| DESIGNED BY ADB 2-68 | CHECKED BY MW 7-15-68 | | T-15-6 (66) 267 |
| DRAWN BY MLA 2-20-68 | CHECKED BY MW 5-24-68 | | PROJECT NUMBER |
| DETAILED BY E 2-20-68 | CHECKED BY MW 5-24-68 | | 609+22.22 |
| APPROVED 7-29-68 | | | STATE |
| APPROVED 7-29-68 | | | UTAH |
| NO. | DATE | REMARKS | |
| | | REVISIONS | |
| | | | E-14 W. 6-9-14 |

END 40TH — 40TH AVEN.

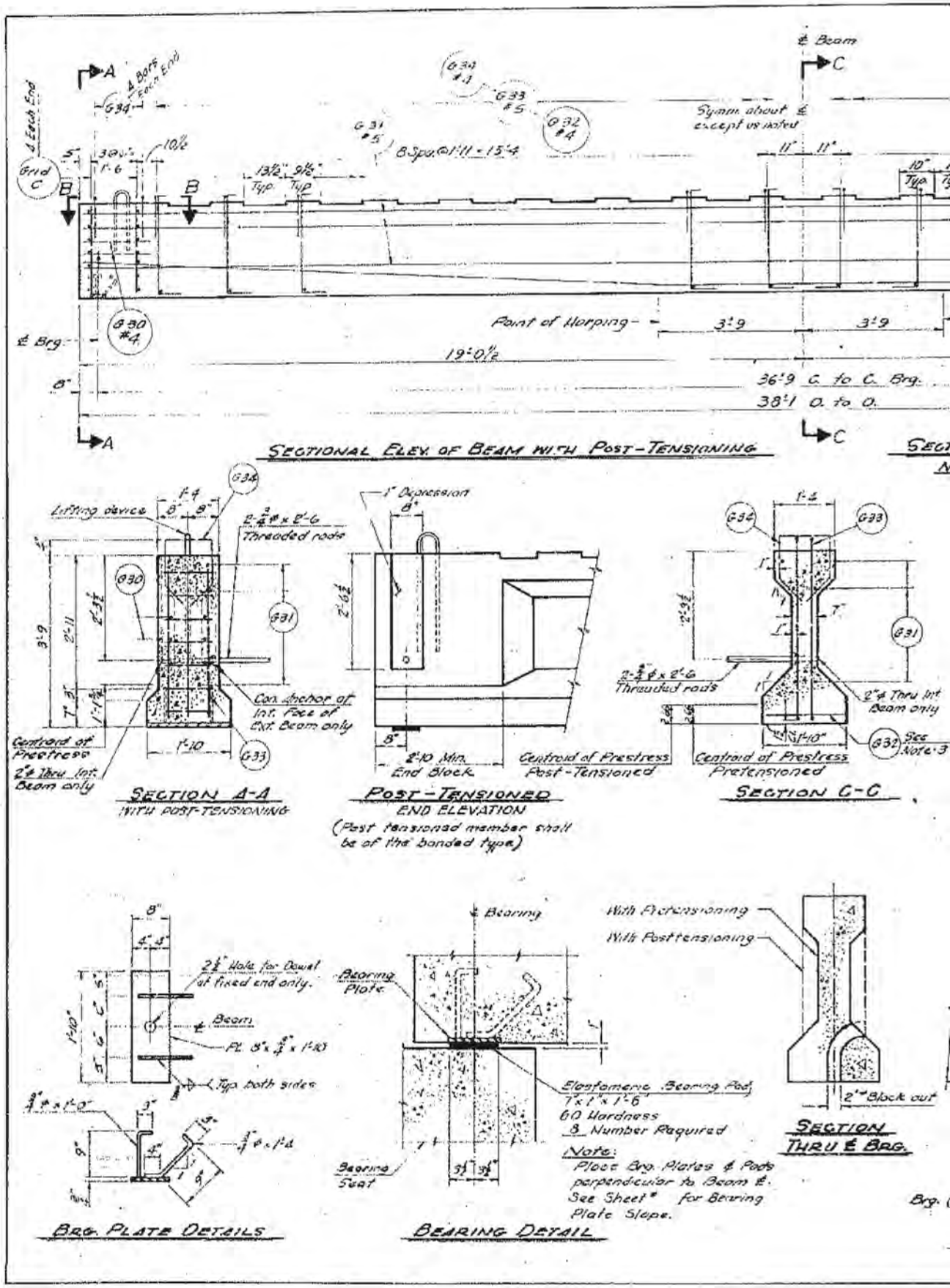


**FOR INFORMATION ONLY**

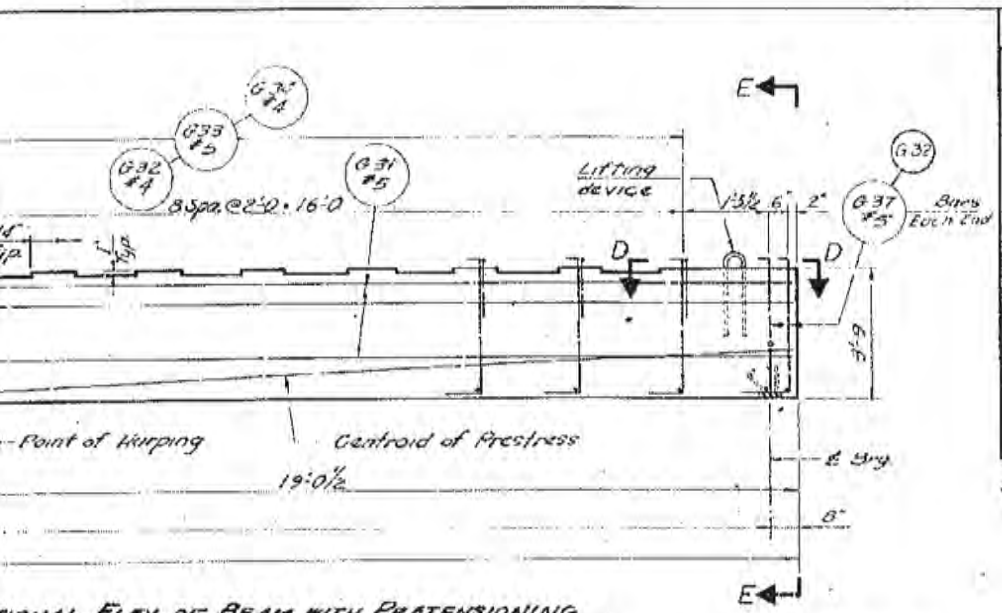


## REINFORCING BAR SCHEDULE

| Mark | Size No. | Length | SKETCH |
|---|---|---|---|
| G30 | 4 | 2'-6 | |
| G31 | 5 | | |
| G32 | 4 | 1'-6 | |
| G33 | 5 | 5'-1 | 4'-0 |
| G34 | 4 | 4'-3 | 11" 7½" 1'-2" |
| G35 | 5 | 1'-2 | |
| G36 | 5 | 3'-4 | |
| G37 | 5 | 4'-6 | 4'-0 |

Notes:

1- Unless otherwise shown, all dimensions are out to out of bars.

2- Threaded Rods to be furnished by Beam fabricator.

## ...IONAL ELEV. OF BEAM WITH PRETENSIONING

Note: Prestressing strand for pretensioned members shall not exceed 7/16" diameter.

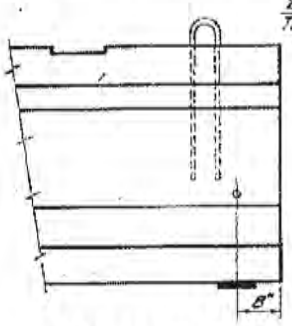


## PRETENSIONED END ELEVATION

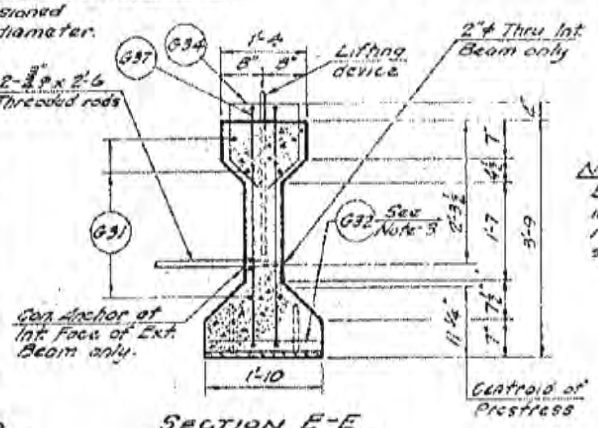


## SECTION E-E WITH PRETENSIONING

Note-3

Bar (G32) shall be placed immediately above lower row of prestressing strands.

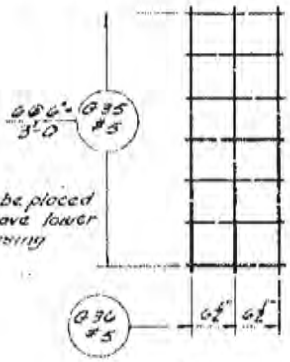


## GRID-C

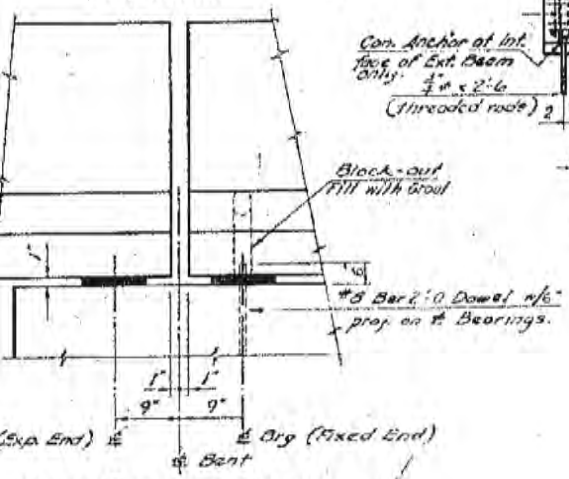


## BEAM BEARING DETAILS

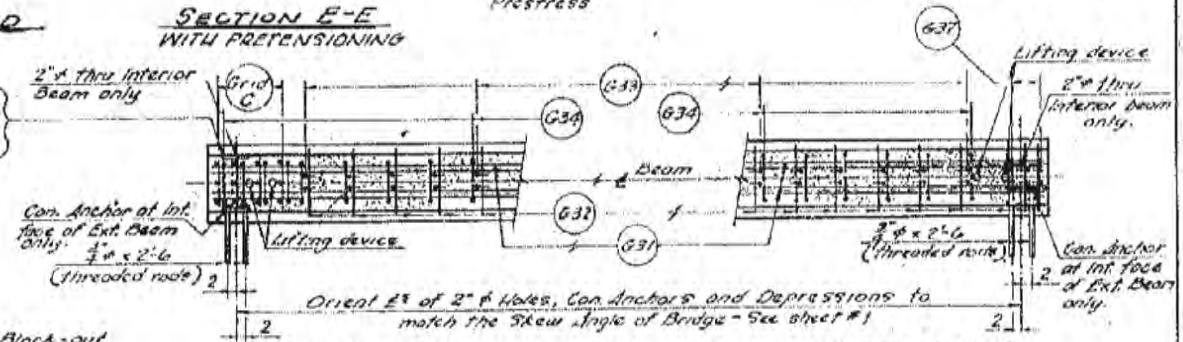


## SECTION B-B
END BLOCK DETAILS WITH POST-TENSIONING

## SECTION D-D
END DETAILS WITH PRETENSIONING

AASHO. Type III Beam
Final prestressing forces after losses.
Pretensioned = 282 Kips
Posttensioned = 301 Kips
f'ci Pretensioned = 4000 p.s.i.
f'ci Posttensioned = 4000 p.s.i.
2 Exterior Beams required - B2
___ Interior Beams required -
Min. Area Prestressing Steel = 1.68 sq. in.

UTAH STATE DEPARTMENT OF HIGHWAYS
SALT LAKE CITY, UTAH
STRUCTURES DIVISION

NORTH LEHI - SOUTH PROVO
U.(I.15) OVER 400 No. St. IN OREM (WIDENING)
PRESTRESSED BEAM DETAILS B2

| | | |
|---|---|---|
| DESIGNED BY A.O.B. 5-68 | CHECKED BY MWT 5-69 | I-15-6(66)261 |
| DRAWN BY K.L.H. 5-20-69 | CHECKED BY | PROJECT NUMBER |
| SUBMITTED BY 5-21-69 | CHECKED BY | 609+22.22 |
| APPROVED 7-29-69 | | STATION |
| APPROVED 7-29-69 | | UTAH |

| NO. | BY | DATE | REVISIONS |
|---|---|---|---|

REVISIONS

DRG. F-14 W. 7 of 14

ENG. AUTH. ____ GOVERN. AUTH. ____

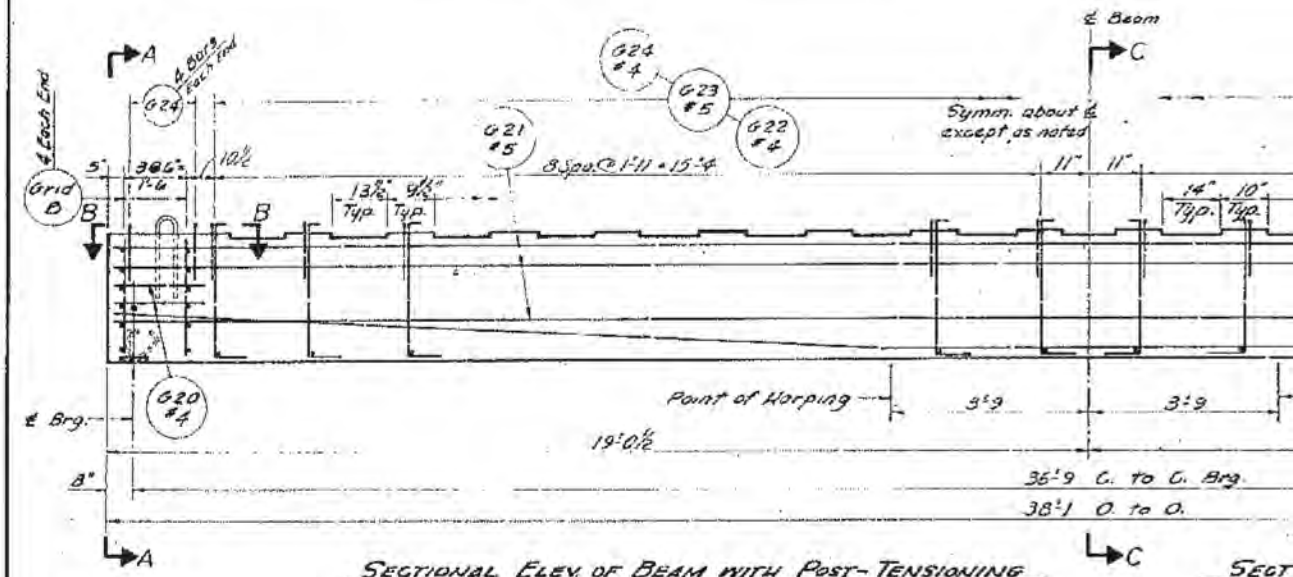


SECTIONAL ELEV. OF BEAM WITH POST-TENSIONING

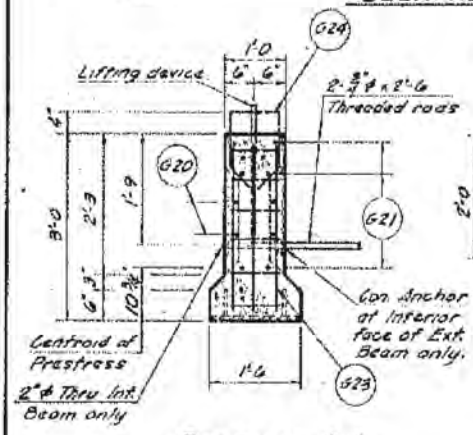


SECTION A-A
WITH POST-TENSIONING

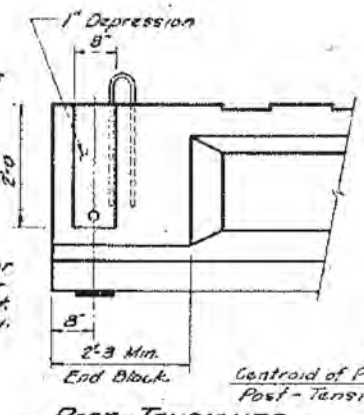


POST-TENSIONED
END ELEVATION
(Post tensioned member shall be of the bonded type)

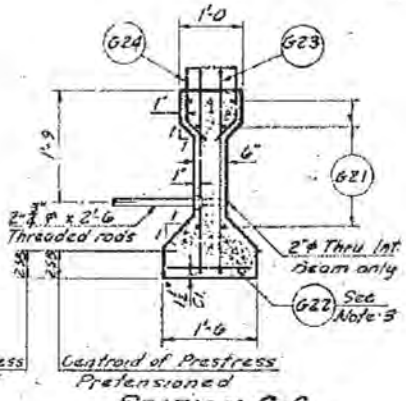


SECTION C-C

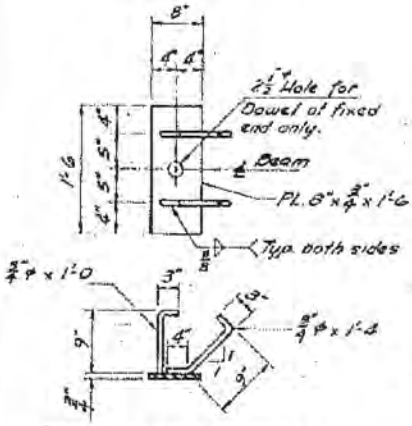


BRG. PLATE DETAILS

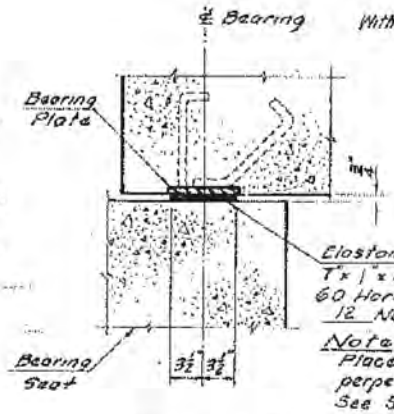


Note:
Place Brg. Plates & Pads perpendicular to Beam ℄.
See Sheet # for Bearing Plate Slope.

BEARING DETAIL

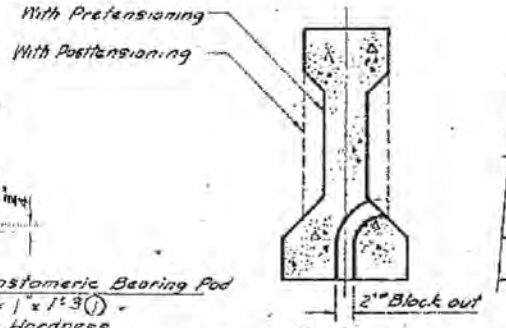


SECTION THRU ℄ BRG.

Brg. (

**FOR INFORMATION ONLY**

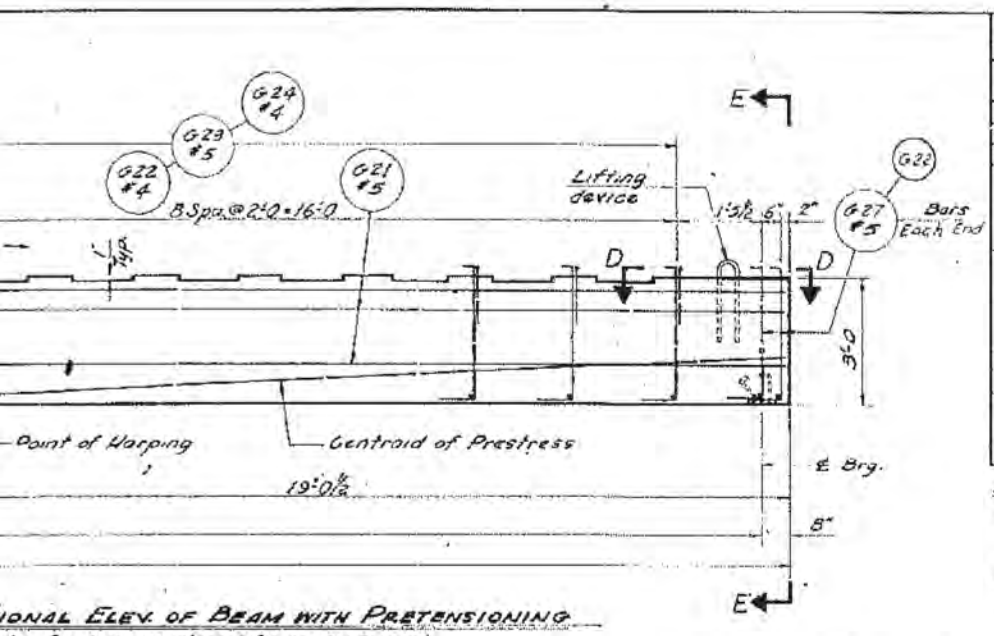


## REINFORCING BAR SCHEDULE

| Mark | Size No. | Lgth. | SKETCH |
|---|---|---|---|
| G20 | 4 | 1'-11 | |
| G21 | 5 | | |
| G22 | 4 | 1'-3 | |
| G23 | 5 | 4'-4 | 3" 3'-3 1" |
| G24 | 4 | 3'-6 | 10" 6" 10" 1" |
| G25 | 5 | 10' | |
| G26 | 5 | 2'-8 | |
| G27 | 5 | 3'-9 | 3" 3'-3 3" |

Notes:

1- Unless otherwise shown, all dimensions are out to out of bars.

2- Threaded Rods to be furnished by Beam fabricator.

## ...IONAL ELEV. OF BEAM WITH PRETENSIONING

...ote: Prestressing strand for pretensioned members shall not exceed $\frac{1}{16}$" diameter.

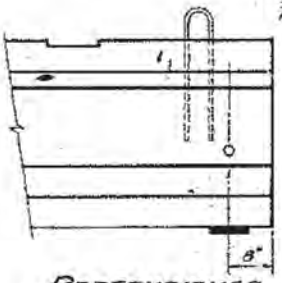


## PRETENSIONED END ELEVATION

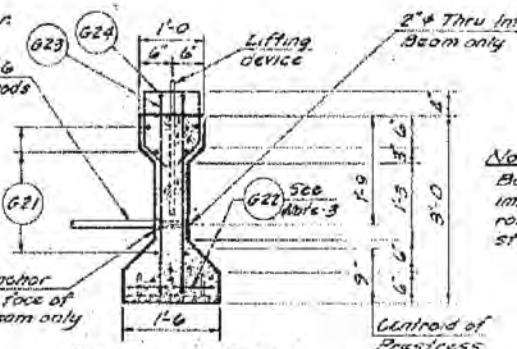


## SECTION E-E WITH PRETENSIONING

Note-3

Bar (G22) shall be placed immediately above lower row of prestressing strands.

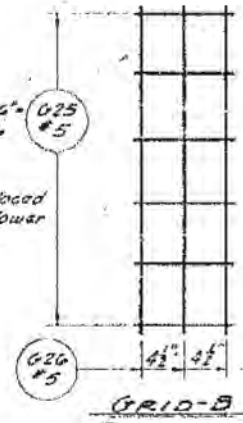


## GRID-B

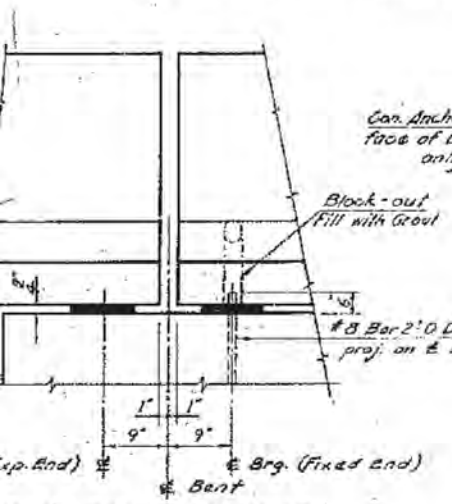


## BEAM BEARING DETAILS

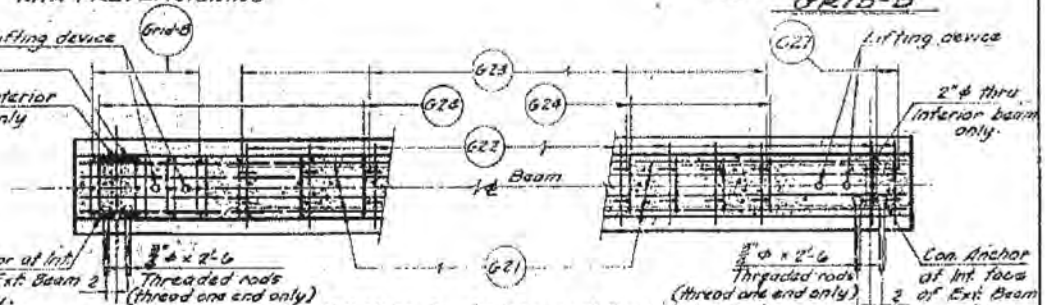


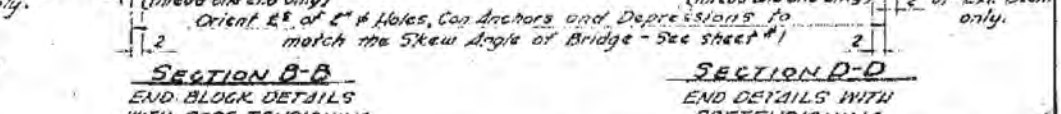


Orient ℄s. of 2" ϕ Holes, Con. Anchors and Depressions to match the Skew Angle of Bridge - See sheet #1

## SECTION B-B END BLOCK DETAILS WITH POST-TENSIONING

## SECTION D-D END DETAILS WITH PRETENSIONING

A.A.S.H.O. Type II Beam
Final prestressing forces after losses.
Pretensioned = 211 Kips
Posttensioned = 225 Kips
f'ci. Pretensioned = 4000 p.s.i.
f'ci. Posttensioned = 4000 p.s.i.
2 Exterior Beams required. B3
4 Interior Beams required. B3
Min. Area Prestressing Steel = 1.11 sq. in.

| No. | By | Date | Remarks |
|---|---|---|---|
| (1) | PAG. | 10-21-69 | Bearing Pad Thickness |

REVISIONS

UTAH STATE DEPARTMENT OF HIGHWAYS
SALT LAKE CITY, UTAH
STRUCTURES DIVISION

NORTH LEHI - SOUTH PROVO
U-1(215) OVER 400 No. St. IN OREM (WIDENING)
PRESTRESSED BEAM DETAILS

| | | |
|---|---|---|
| Designed by A.D.B. 8-68 | Checked by W.D.T. 12-68 | F15-6(66)287 |
| Drawn by R.L.A. 5-21-69 | Checked by W.D.B. 6-28-69 | Project Number |
| Quantities by 5-21-69 | Checked by W.D.B. 6-28-69 | 609+22.22 |
| Reviewed by 7-22-69 | Structures Engineer | Station |
| Approved 7-22-69 | Structures Div. Engineer | UTAH |

F.A. No. | Dwg. F-14 | 8 of 14

Fed. Auth. | Constr. Auth.

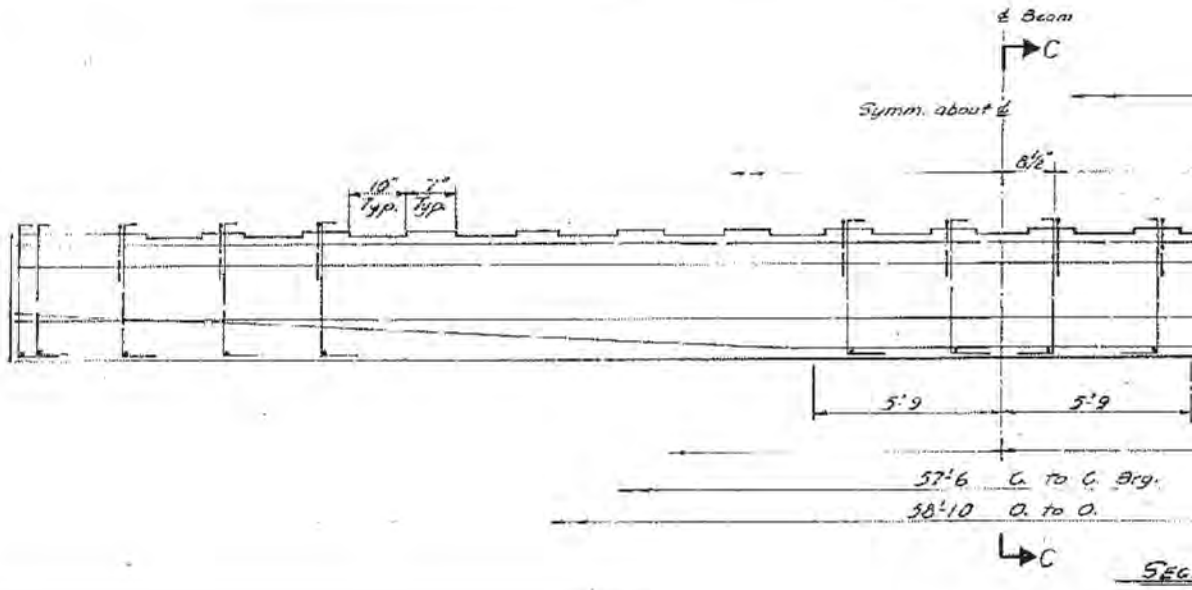


**FOR INFORMATION ONLY**

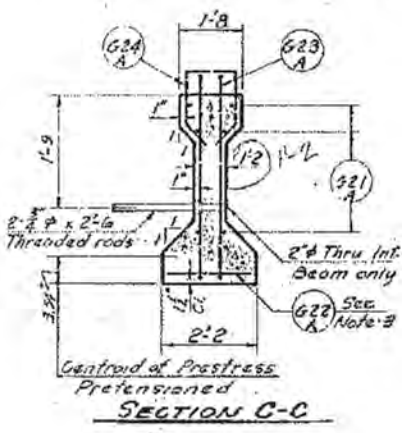


SECTION C-C

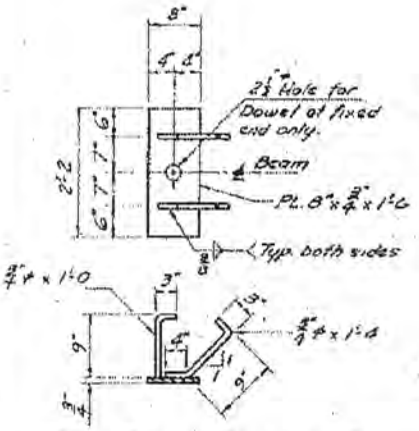


BRG. PLATE DETAILS (1)

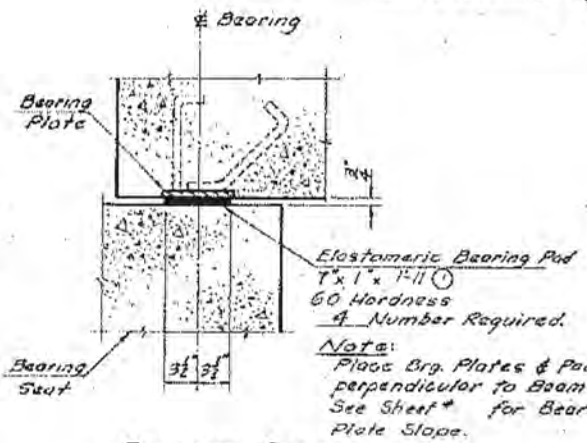


BEARING DETAIL

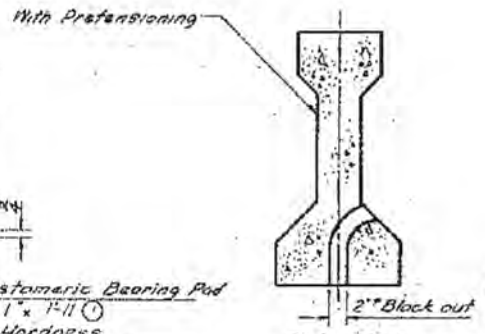


SECTION THRU ℄ BRG.

Brg.

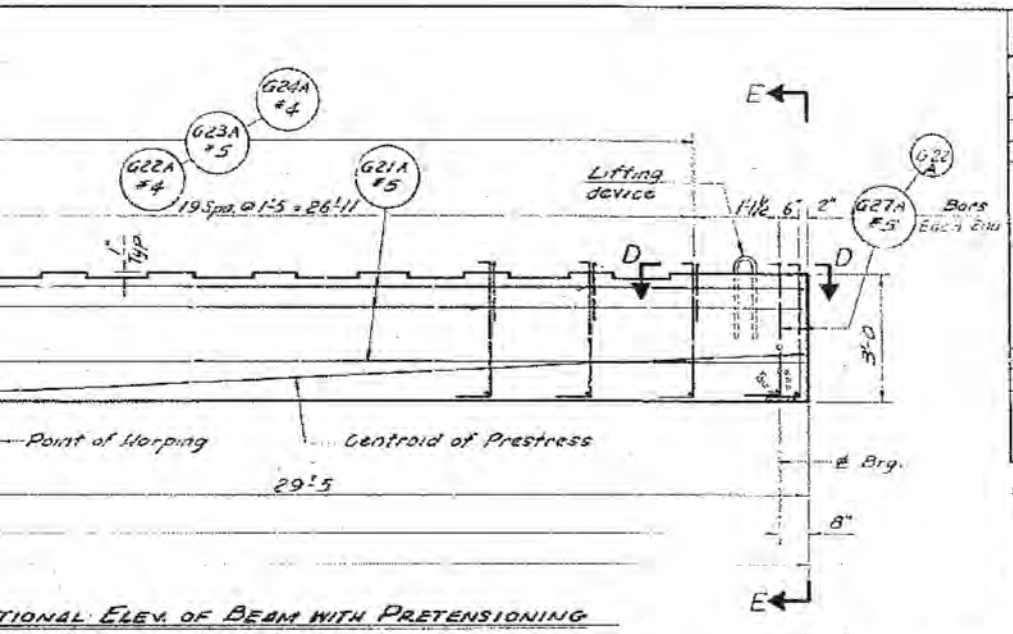


TIONAL ELEV. OF BEAM WITH PRETENSIONING

Note: Prestressing strand for pretensioned members shall not exceed $\frac{1}{16}$" diameter.

REINFORCING BAR SCHEDULE

| Mark | Size No. | Lgth. | SKETCH |
|---|---|---|---|
| G20A | 4 | 1'-11 | |
| G21A | 5 | 38'-6 | |
| G22A | 4 | 1'-10 | |
| G23A | 5 | 4'-4 | 3'-3 |
| G24A | 4 | 4'-2 | 10" |
| G27A | 5 | 3'-9 | 3'-3 |

Notes:

1- Unless otherwise shown, all dimensions are out to out of bars.

2- Threaded Rods to be furnished by Beam fabricator

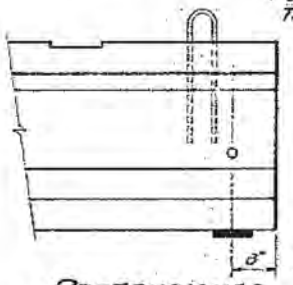


PRETENSIONED END ELEVATION

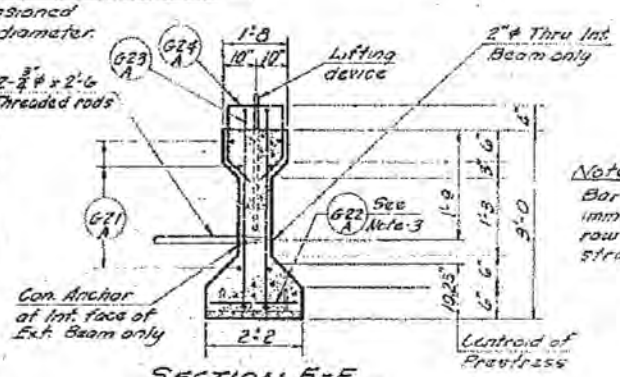


SECTION E-E WITH PRETENSIONING

Note-3

Bar G22A shall be placed immediately above lower row of prestressing strands.

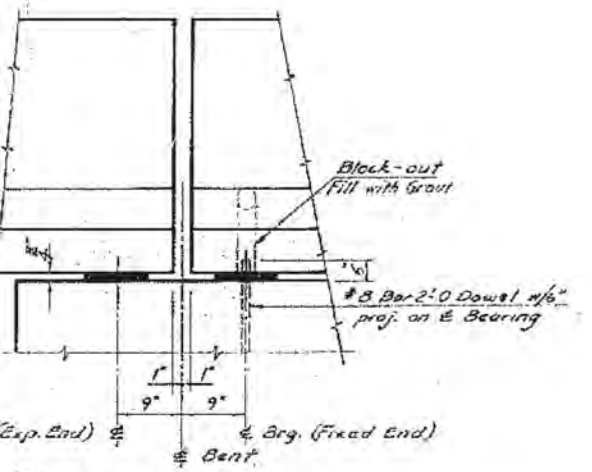


BEAM BEARING DETAILS

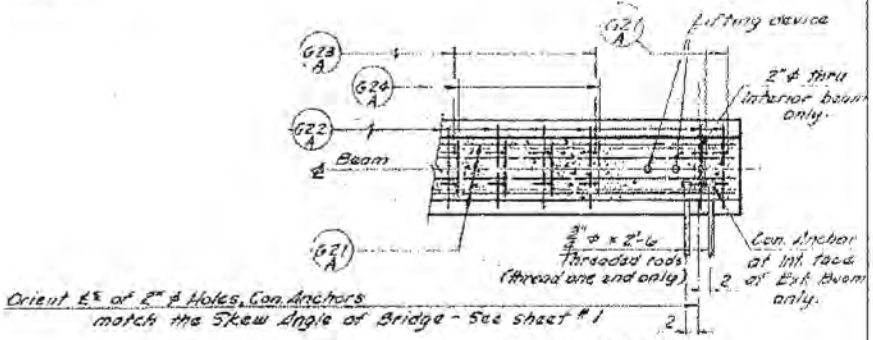


Orient ℄s of 2"ϕ Holes, Con. Anchors match the Skew Angle of Bridge - See sheet #1

SECTION D-D END DETAILS WITH PRETENSIONING

A.A.S.H.O. Type IIA Beam
Final prestressed forces after losses.
Pretensioned - 581 Kips
f'ci Pretensioned = 4000 p.s.i.
1 Exterior Beams required. B4
1 Interior Beams required. B4
Min. Area Prestressing Steel = 3.80 sq. in.

| No. | BY | DATE | REVISIONS |
|---|---|---|---|
| 1 | | 1-4-70 | Bearing Plate Details |

UTAH STATE DEPARTMENT OF HIGHWAYS
SALT LAKE CITY, UTAH
STRUCTURES DIVISION

NORTH LEHI - SOUTH PROVO
UH(15) OVER 400 No. ST. IN OREM (WIDENING)
PRESTRESSED BEAM DETAILS B4

| | | | |
|---|---|---|---|
| DESIGNED BY RJL 6-27-69 | CHECKED BY MN 7-15-69 | F-15-6(66)261 | |
| DRAWN BY WLA 5-23-69 | CHECKED BY WM B 6-29-69 | PROJECT NO. | |
| QUANTITIES BY 5-23-69 | CHECKED BY RJL 6-27-69 | 609+22.22 | |
| APPROVAL RECOMM. 7-29-69 DATE | Charles D. Gray ENGINEER | STATION | |
| APPROVED 7-29-69 DATE | Ray J. Schlabach ENGINEER | UTAH COUNTY | |
| S.P. NO. | | DWG. F-14 | 9 of 14 |

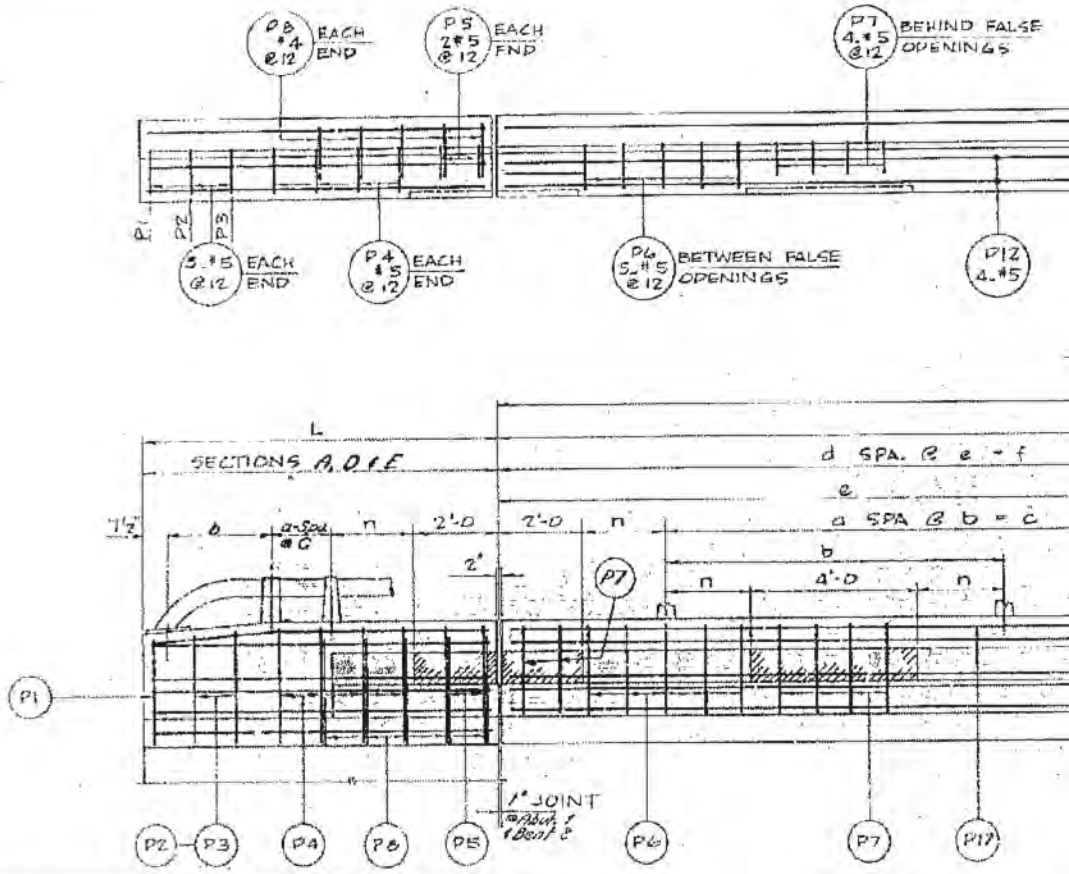


EL

**FOR INFORMATION ONLY**

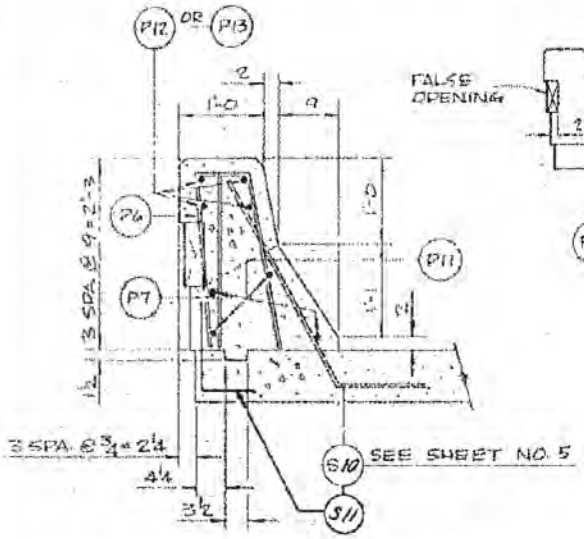


SECTION A-A

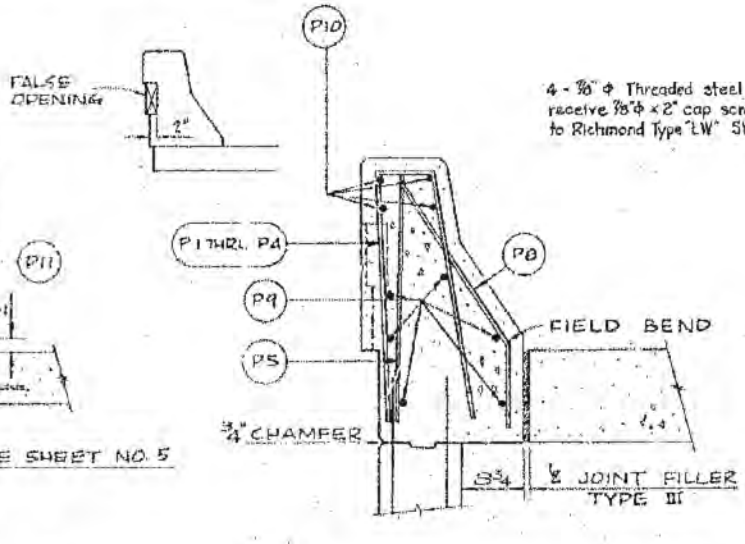


SECTION B-B

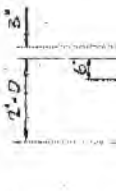


02-MAY-2005 DGN Files IP PWPubnet\1672\4433.F-14w-10.Form\Foundation

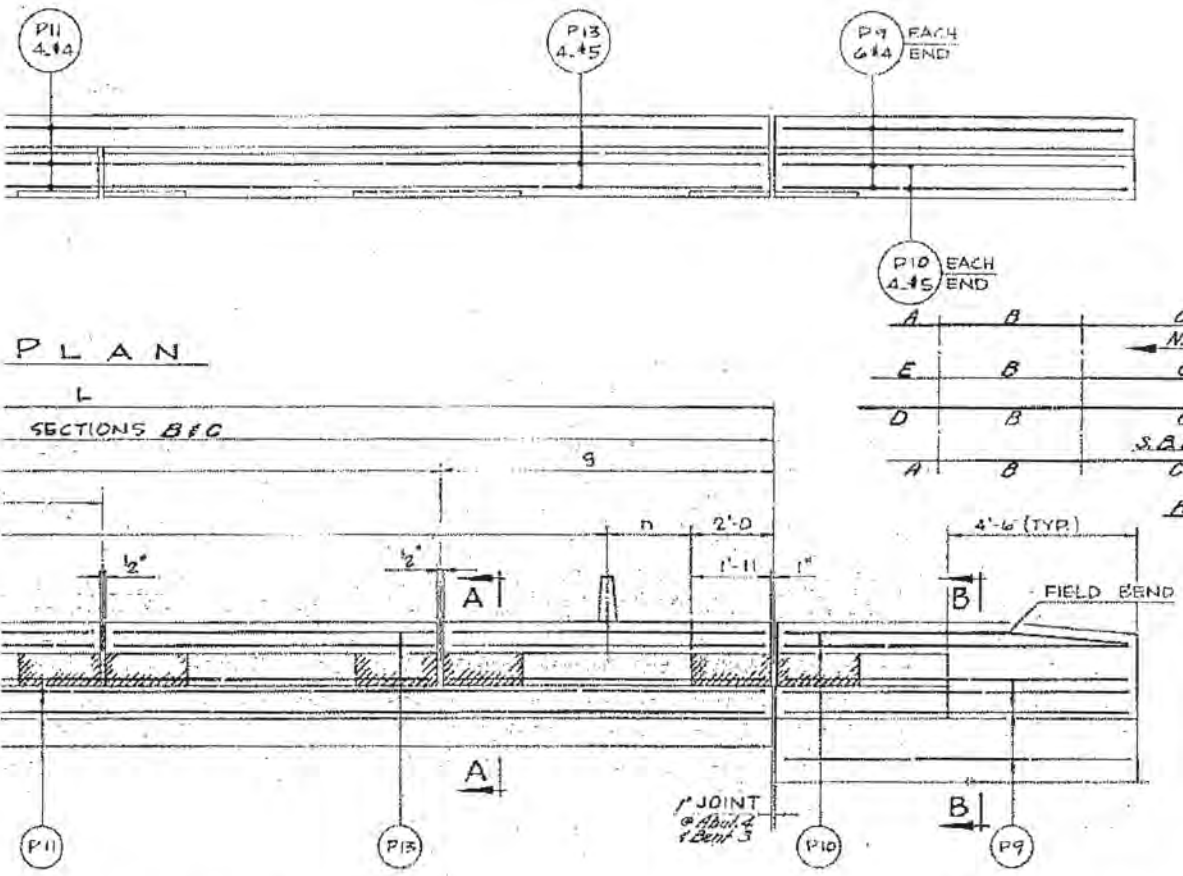


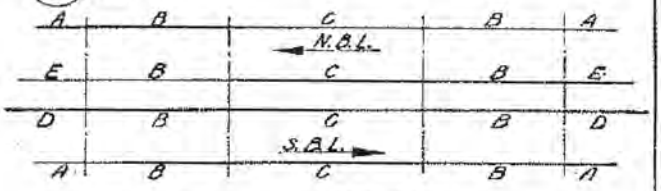


KEY PLAN

ELEVATION

SCHEDULE

| PARAPET SECTIONS | NO. OF SECTIONS | a | b | c | d | e | f | g | n | L |
|---|---|---|---|---|---|---|---|---|---|---|
| A | 4 | [illegible] | 6'-4 | | | | | | 2'-0 | 10'-11½ |
| B | 8 | 4 | 7'-8½ | 30'-10 | 1" | 23'-1½ | 23'-1½ | 15'-5 | 1'-2½ | 38'-6½ |
| C | 4 | 7 | 7'-4½ | 51'-7½ | 2 | 22'-1½ | 44'-3 | 14'-9 | 1'-8¼ | 59'-0 |
| D | 2 | 2 | 5'-9½ | 7'-0 | | | | | 1'-6½ | 23'-11½ |
| E | 2 | 1 | 7'-10 | 8'-6 | | | | | 2'-0 | 20'-11½ |

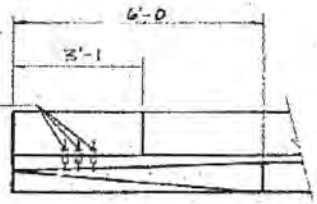


(PLAN)

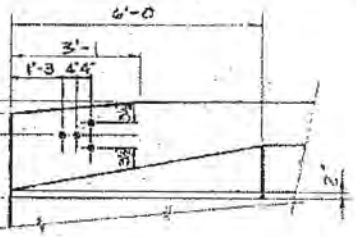


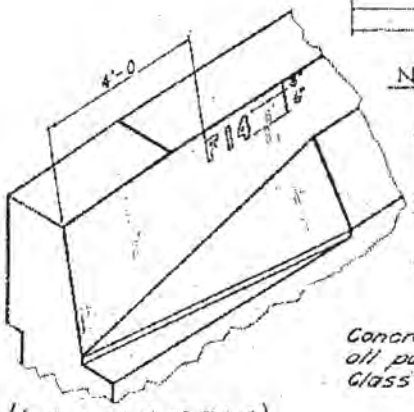


(ISOMETRIC)

PARAPET END DETAILS

NOTES:

1. SEE SHEET NO. 11 FOR DETAILS OF RAIL INSTALLATION.
2. ALL LONGITUDINAL BARS ARE SHOWN IN REINFORCING SCHEDULE WITH SUBSCRIPTS WHICH REFER TO THE PARAPET SECTION WHERE THEY ARE LOCATED (SEE KEY PLAN.)
3. FORMS FOR FALSE OPENINGS SHALL BE TAPERED APPROXIMATELY ¼" TO FACILITATE REMOVAL OF FORMS.
4. COVER TO REINFORCING STEEL SHALL BE 1½ INCHES, MINIMUM.

*Concrete Quantities for all parapets is 77.4 Cu. Yd. Class A.A.*

UTAH STATE DEPARTMENT OF HIGHWAYS
SALT LAKE CITY, UTAH
STRUCTURES DIVISION

NORTH LEHI - SOUTH PROVO
U(I-15) OVER 400 No. St. IN OREM (WIDENING)

PARAPET DETAILS

| | | |
|---|---|---|
| DESIGNED BY AGB 1-68 | CHECKED BY MNJ 7-15-69 | (I-15-6(66)) 267 |
| DRAWN BY KLAP 2-1-69 | CHECKED BY NJB 6-25-69 | PROJECT NUMBER |
| QUANTITIES BY 6-25-69 | CHECKED BY NJB 6-25-69 | 609+22.22 |
| APPROVAL RECOMM. 7-25-69 DATE | (signature) ENGINEER OF STRUCTURES | STATION |
| APPROVED 7-25-69 DATE | (signature) STATE HIGHWAY ENGINEER | UTAH COUNTY |

| NO. | BY | DATE | REMARKS |
|---|---|---|---|
| | | | REVISIONS |

REV. NO. DRG. F-14 W 10 OF 14

USE WITH COMP STEEL AND PRESTRESSED BEAM END AUTH LENGTH AUTH

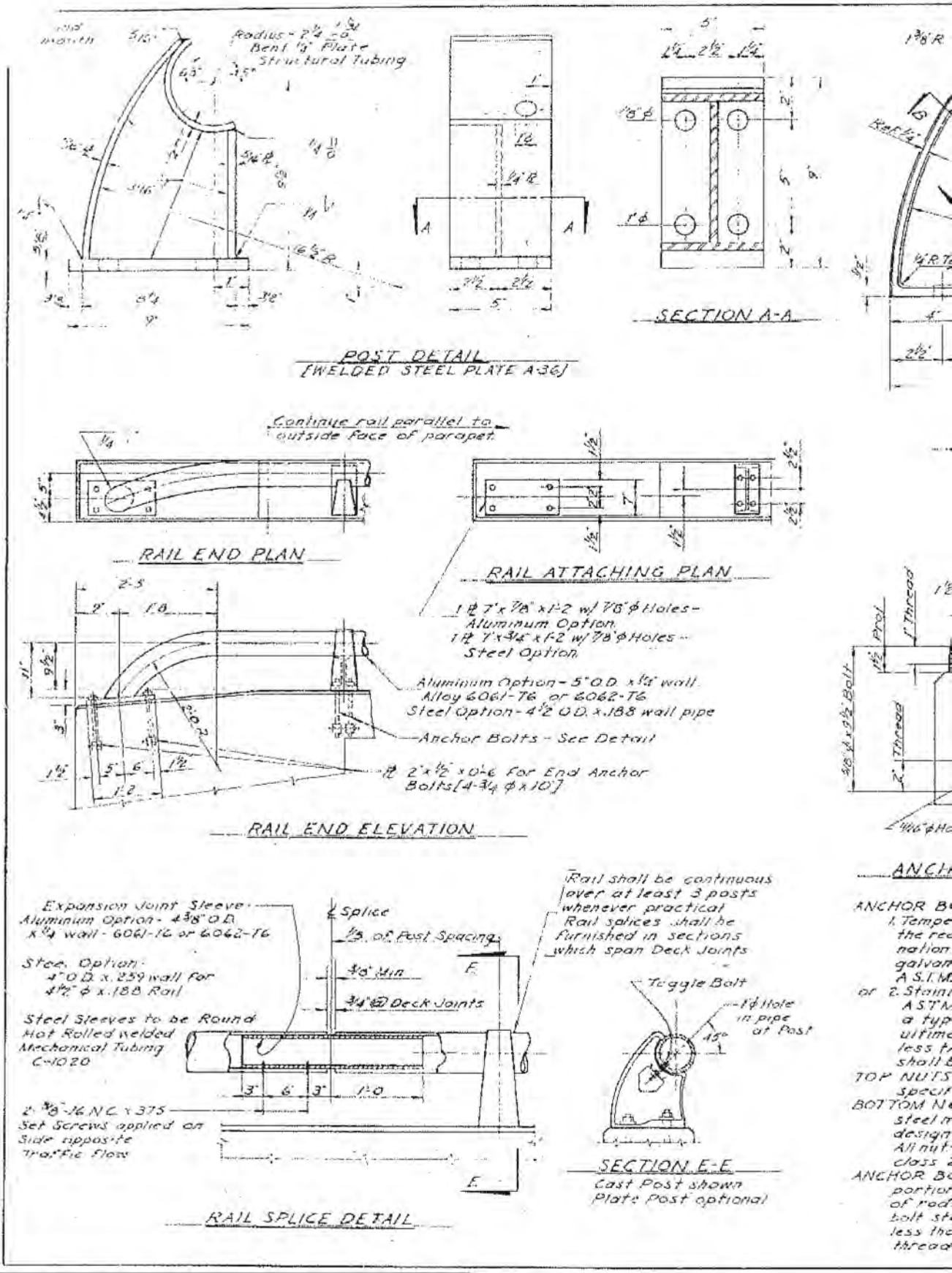


**FOR INFORMATION ONLY**

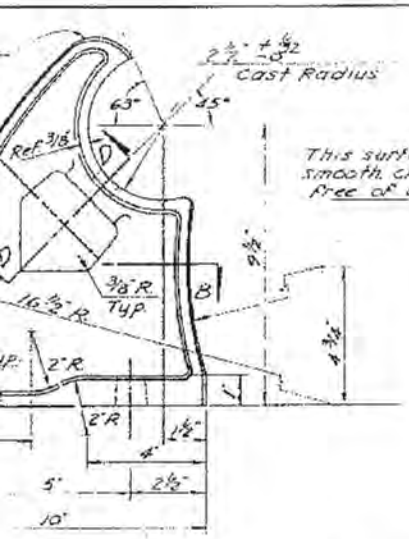


POST DETAIL
[ALUMINUM CASTING]

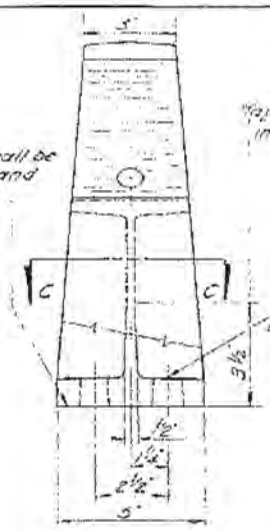


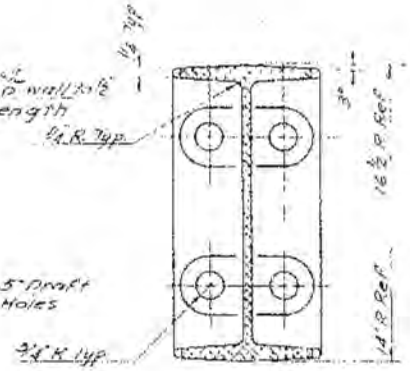


SECTION B-B

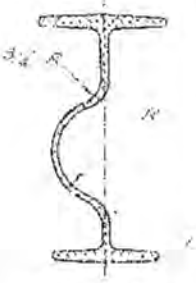


SECTION C-C

## GENERAL NOTES

1. Contractor, at his option, may supply either steel or aluminum posts and railing.
2. Aluminum castings shall be a permanent mold Cast Aluminum, Alloy A-344-T4, complying with the specifications for "Cast Aluminum Alloy Railing Posts."
3. Unless otherwise specified all draft shall be 3°.
4. All unmarked radii shall be 1/8".
5. The contact surfaces of concrete and aluminum shall be thoroughly coated with aluminum impregnated caulking compound.
6. Steel posts shall be structural Carbon Steel conforming with A.A.S.H.O. designation M-183 [A.S.T.M. A-36].
7. Steel rail shall be fabricated from pipe conforming to A.P.I. Specification 5LX, Grade X52 (Pressure tests & radiographic inspection not required).
8. Steel posts, railing & sleeves shall be galvanized in accordance with A.A.S.H.O. designation M111 [A.S.T.M. A-123]

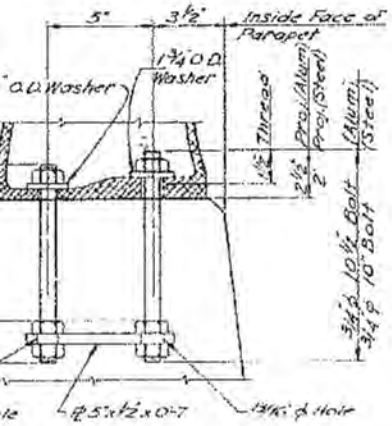


OR BOLT DETAIL

OLTS shall be:
red steel bolts conforming to
quirements of A.A.S.H.O. desig-
M-164 [A.S.T.M. A-325] and
ized in accordance with
A-123.
ess steel bolts conforming to
. designation A-276 and of
e and condition having an
ate tensile strength of not
han 115,000 p.s.i. Threads
e class 2A rolled threads.
shall conform to the same
ications as bolts.
ITS shall be ungalvanized
uts conforming to A.A.S.H.O.
ation M-164 [A.S.T.M.-A325].
s shall have threads of
2B tolerance.
OLT SIZES refer to the unheaded
of the bolt. Threaded portion
s may be upset but anchor
nck shall have a diameter not
n that of the root of the

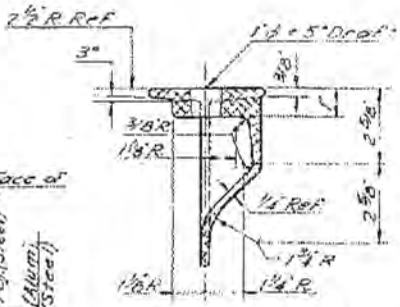


SECTION D-D

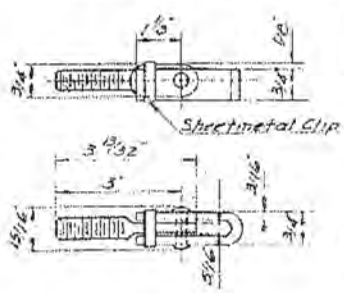


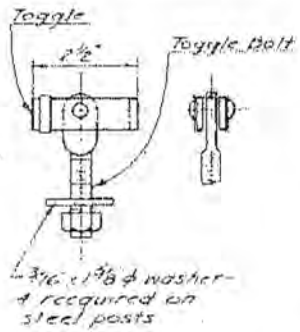


TOGGLE BOLT DETAIL

TOGGLE MATERIAL - 1015 H.R. steel pickled and oiled. Round edge A.S.T.M. A-303-58T.
TOGGLE BOLT MATERIAL - 1/2"-13 N.C. 1335 C.R. steel heat treated R.C. 32-38 A.S.T.M. A-354.
WASHER MATERIAL - SAE 1020 H.R. steel PL A.S.T.M. A-7, break sharp edges.
NUT MATERIAL - 1/2-13 American heavy hex nut. 1035 C.R. steel heat treated A.S.T.M. A-325.
CADMIUM PLATING ON STEEL - Type N.S. .0005" thick, A.S.T.M. A-165-55 [All parts]

## DESIGN NOTES

fa = 6,000 p.s.i., cast post
Fa = 21,000 psi, Alum. rail
fs = 20,000 psi, Plate post
Fs = 34,800 psi, Steel rail

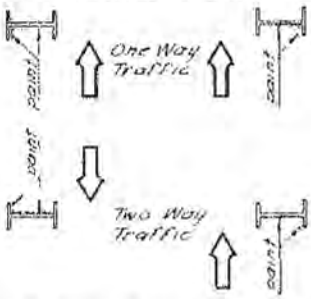


POST PAINTING DETAIL

All railing posts shall be painted with reflectorizing paint on surface facing approaching traffic. Payment for painting shall be included in contract price for railing

| | | | |
|---|---|---|---|
| UTAH STATE DEPARTMENT OF HIGHWAYS<br>SALT LAKE CITY, UTAH<br>STRUCTURES DIVISION | | | |
| NORTH LEHI - SOUTH PROVO<br>U-H(I-15) OVER 400 NO. ST. IN OREM (WIDENING)<br>RAILING DETAILS | | | |
| DESIGN ASD 8-68 | CHECK MW 7-15-69 | I-15-6(66)267 | |
| DRAWN W.L.A. 5-19-69 | CHECK WMB 6-27-68 | PROJECT NUMBER | |
| SUBMIT W.L.A. 5-19-69 | CHECK WMB 6-27-68 | 609+22.00 | |
| APPROVED FOR PLAN 7-24-69 DATE | Chief Engineer, Design Division | STATION | |
| APPROVED 7-25-69 DATE | Chief Structural Engineer | UTAH | |
| | | COUNTY | |
| | | DWG. NO. F-14 W | 11 of 14 |

| NO. | BY | DATE | REMARKS |
|---|---|---|---|
| | | | REVISIONS |

**FOR INFORMATION ONLY**

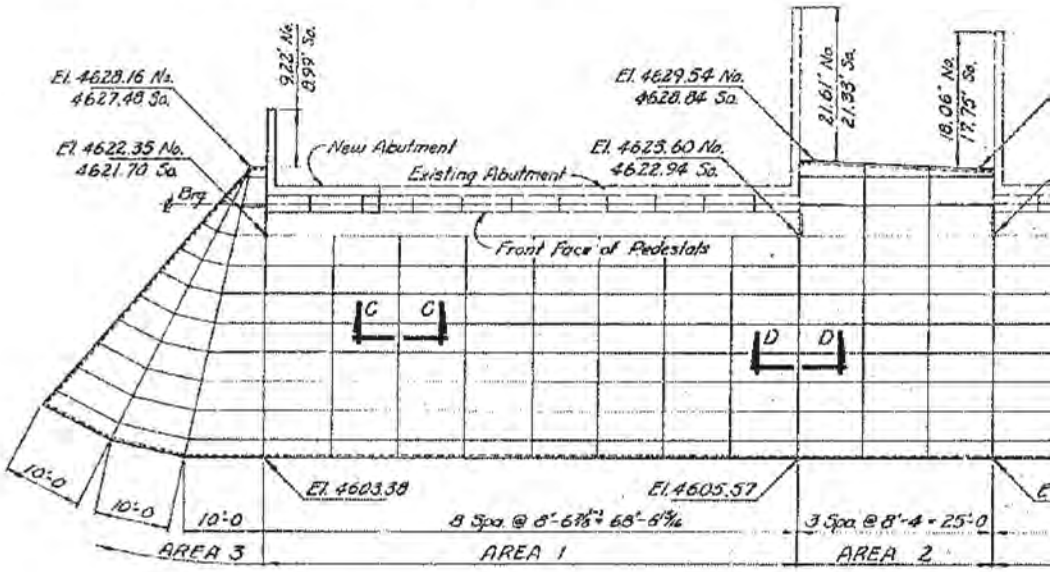


PLAN VIEW - NORTH SLOPE PROTE

South slope protection similar except wh

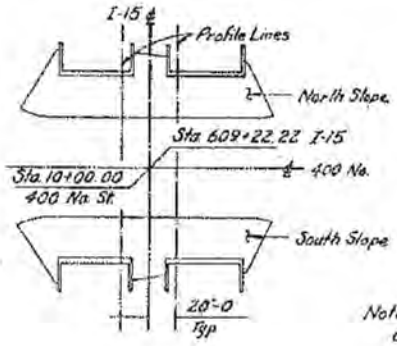


KEY PLAN

Note: Slope Protections are symmetrical about ℄ 400 North Street except where noted.

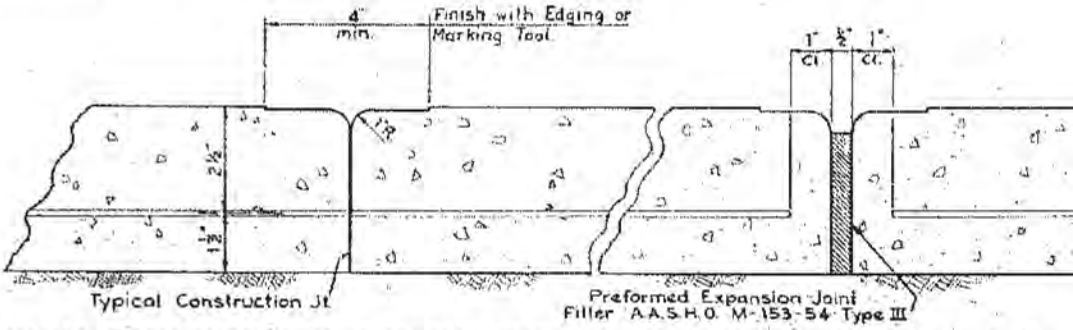


Locate Construction Joints as needed in placing slab. Locate vertical Expansion Joints

SECTION C-C

SECTION D-D

02-MAY-2005 DGN Files IP: PWPadmin\16721\4433.F-14w-12 Kennington

| CONCRETE SLOPE PROTECTION | | | | |
|---|---|---|---|---|
| Location | Area 1 | Area 2 | Area 3 | Quantity Sq Yd. |
| North | 4752 | 1025 | 1083 | 762 |
| South | 4708 | 1030 | 1087 | 758 |
| | | | | 1620 |

① 1637.80

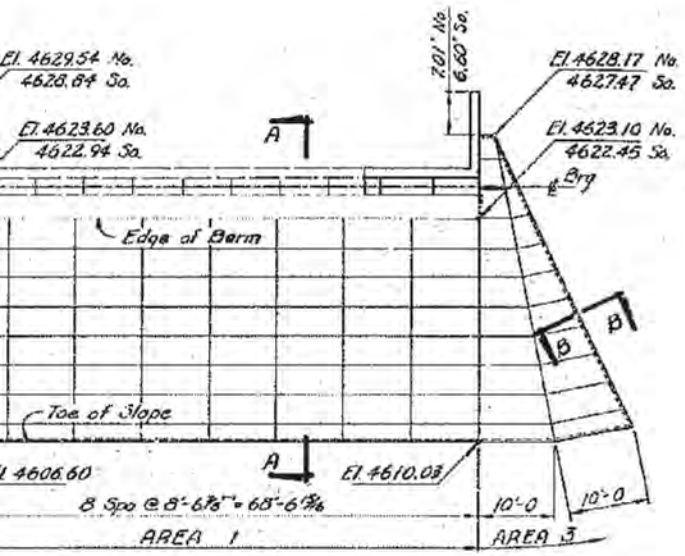


NOTES

① Quantity in Sq. Yd. is estimated exposed Surface

② Elevations at Toe of Slope are approximate only and shall be verified at time of Construction by the Engineer.

③ Payment for furnishing and placing welded wire fabric shall be included in the contract unit price per sq. yd. for concrete slope protection.

④ All areas may be varied by the Project Engineer to suit field conditions.

CTION ONLY
ere noted.

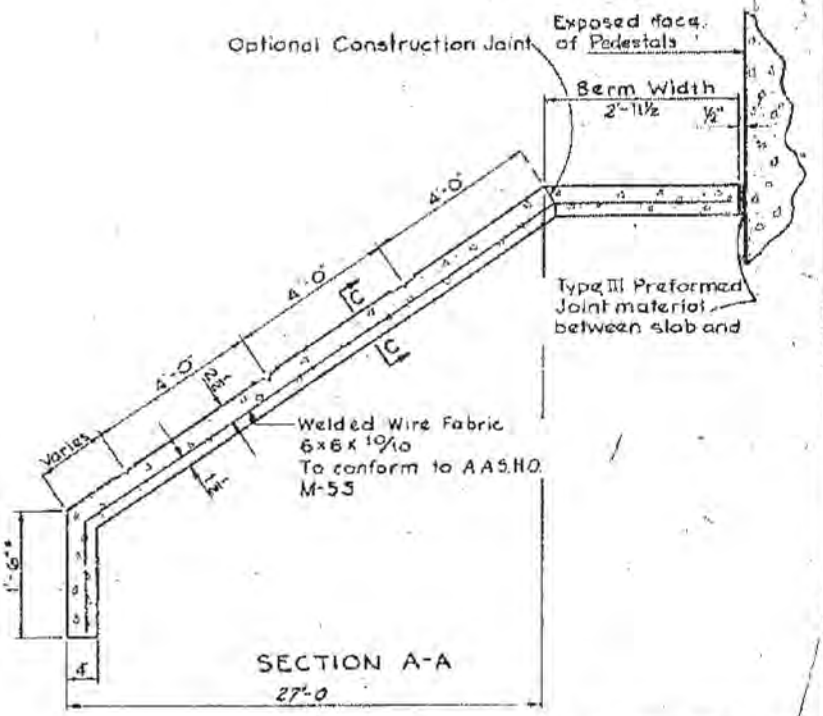


SECTION A-A

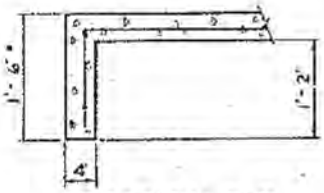


SECTION B-B
(Cut-off wall Detail)

at 40'-0" max spacing.

* NOTE:
Cut-off wall surface area is not included in estimated quantities of Concrete Slope Protection.

UTAH STATE DEPARTMENT OF HIGHWAYS
SALT LAKE CITY, UTAH
STRUCTURES DIVISION

NORTH LEHI - SOUTH PROVO
U(I-15) OVER 400 NO. ST. IN OREM (ADDENDUM)
CONCRETE SLOPE PROTECTION

| | | | |
|---|---|---|---|
| DESIGNED BY A.O.B. 7-68 | CHECKED BY M.J. 7-15-69 | I-15-6(66)267 | |
| DRAWN BY Wm B. 7-2-69 | CHECKED BY RMC. 7-3-69 | PROJECT NUMBER | |
| QUANTITIES BY W.D.B. 7-2-69 | CHECKED BY RMC. 7-3-69 | 609+22.22 | |
| APPROVED RECOMM. 7-28-69 | Charles D. Clay | REFERENCE | |
| APPROVED 7-29-69 | Ray J. Gallery | UTAH | |

① 8-9-71 Final Quantities
REVISIONS

DWG F-14-W | 12 OF 14

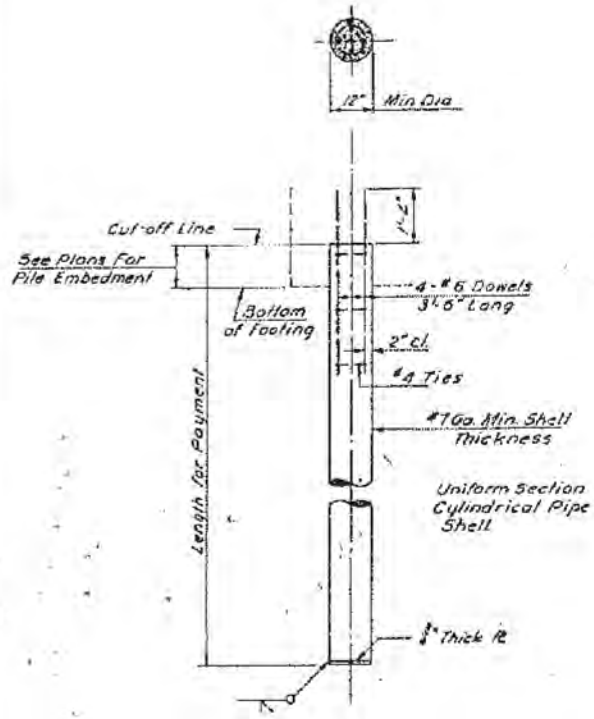


TYPE I

Splices in Type I piles shall be full strength welded splices.

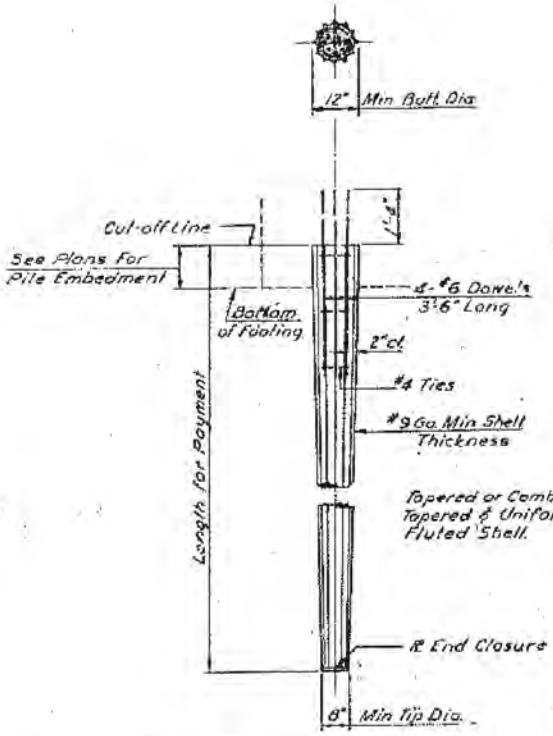


TYPE II

Tapered fluted shells shall be made from steel confor to SAE 1010 or SAE 1015 Specifications. The yield point o steel in the fabricated shells shall not be less than 50,000

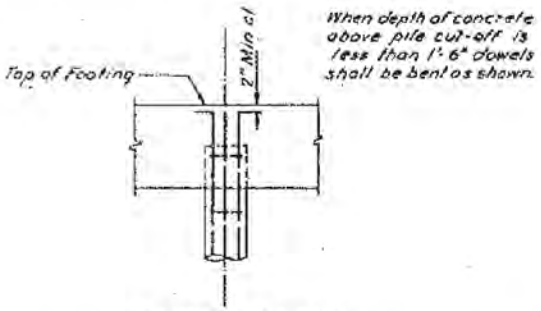


DOWEL DETAIL

NOTES:

Pile shells shall be filled with Cla.

All reinforcing steel shall be a conforming to ASTM Designatio.

Reinforcing steel shall be adequa placing of concrete around bars.

Couplings used in splices shall inside diameter of the couplin diameter of the smallest splice

**FOR INFORMATION ONLY**

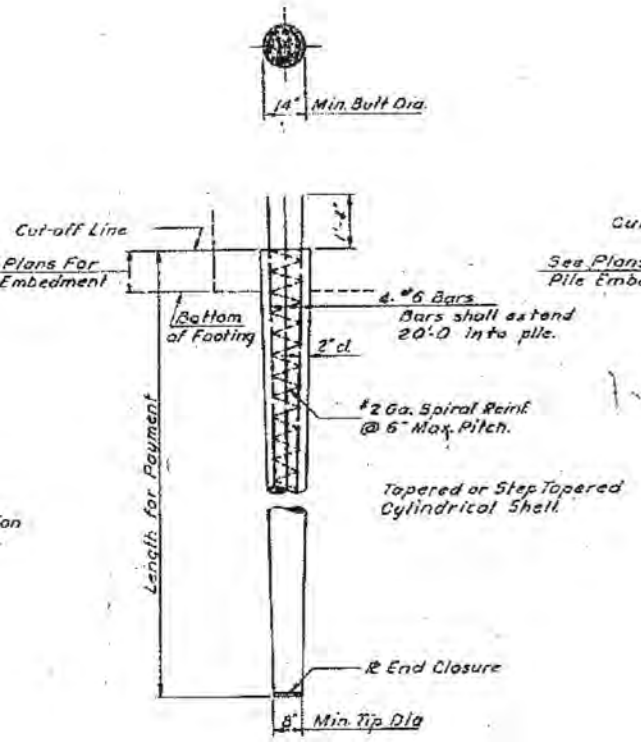


TYPE III

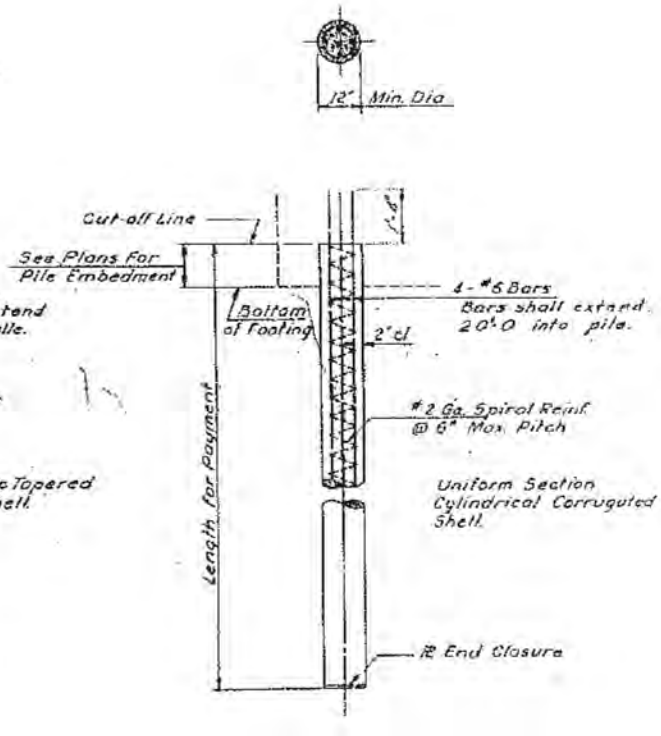


TYPE IV

on

ming
f the
psi

ss A Concrete.

eformed billet-steel bars
n AG15-68, Grade 40.

tely held in final position during

be of a type such that the
ng is not less than the inside
member.

| | | | |
|---|---|---|---|
| | | | |
| | | | |
| | | | |
| | | | |
| NO. | BY | DATE | REMARKS |

REVISIONS

UTAH STATE DEPARTMENT OF HIGHWAYS
SALT LAKE CITY, UTAH
STRUCTURES DIVISION

NORTH LEHI - SOUTH PROVO
(14.715) OVER 400 No. ST. IN OREM (WIDENING)
CONCRETE PILE DETAILS

| | | |
|---|---|---|
| DESIGNED BY ADR 8-68 | CHECKED BY MN 1-15-69 | F-15-6(66)267 |
| DRAWN BY WLA 3-23-69 | CHECKED BY WB 6-27-69 | PROJECT NUMBER |
| QUANTITIES BY 3-23-69 | CHECKED BY WB 6-27-69 | 609:22.22 |
| ATTEST: | GROUP LEADER | SECTION |
| RECOMMENDED BY 7-28-69 | | UTAH |
| APPROVED 7-23-69 DATE | Kay L. Okelberry ASST. ADMINISTRATOR | COUNTY |
| DR. NO. | DRG. NO. F-14 | 13 of 14 |

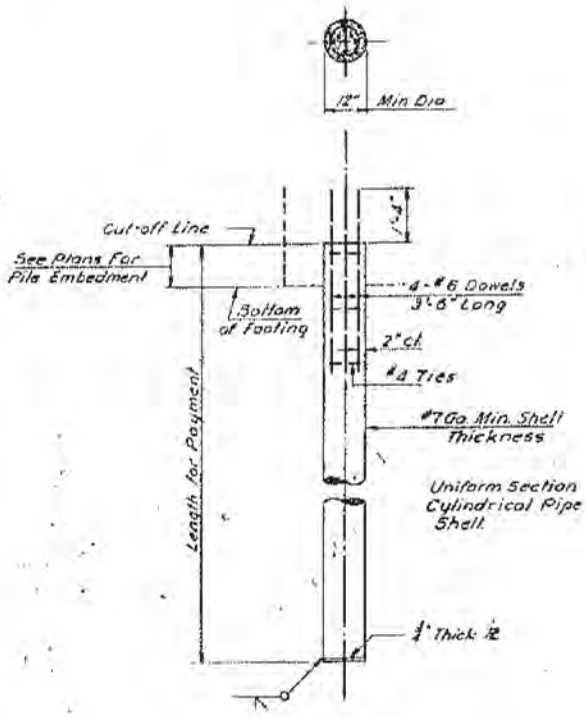


TYPE I

Splices in Type I piles shall be full strength welded splices.

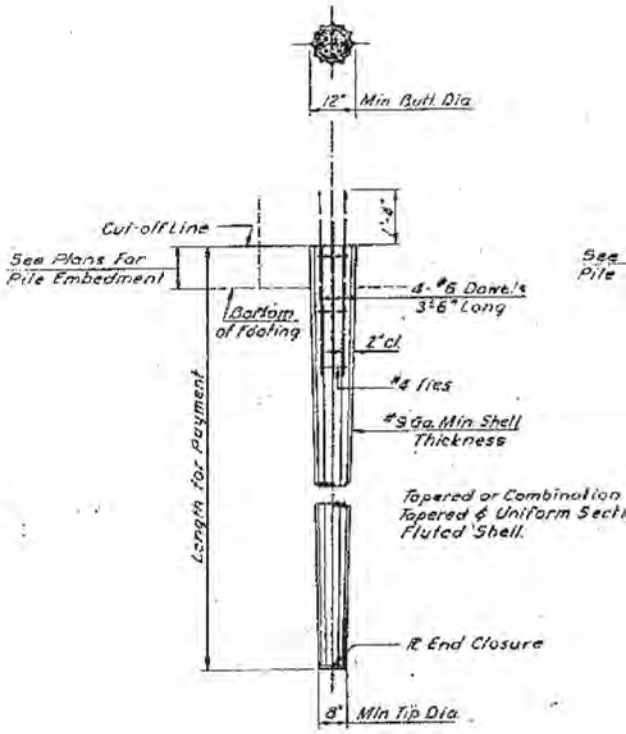


TYPE II

Tapered fluted shells shall be made from steel confor to SAE 1010 or SAE 1015 Specifications. The yield point o steel in the fabricated shells shall not be less than 30,000

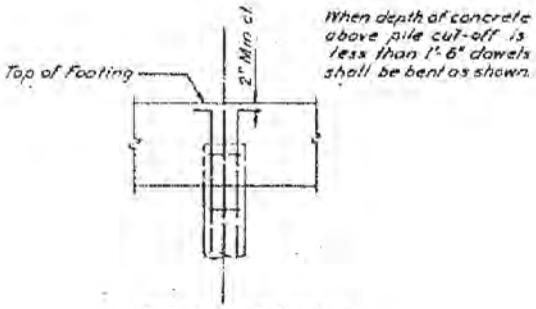


DOWEL DETAIL

NOTES:

Pile shells shall be filled with Clo

All reinforcing steel shall be a conforming to ASTM Designatio

Reinforcing steel shall be adequa placing of concrete around bars.

Couplings used in splices shall inside diameter of the couplin diameter of the smallest splice

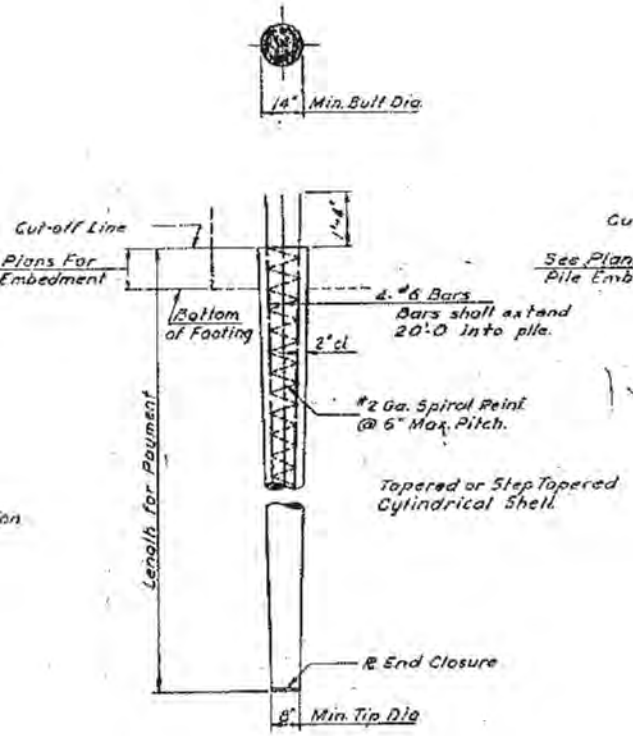


TYPE III

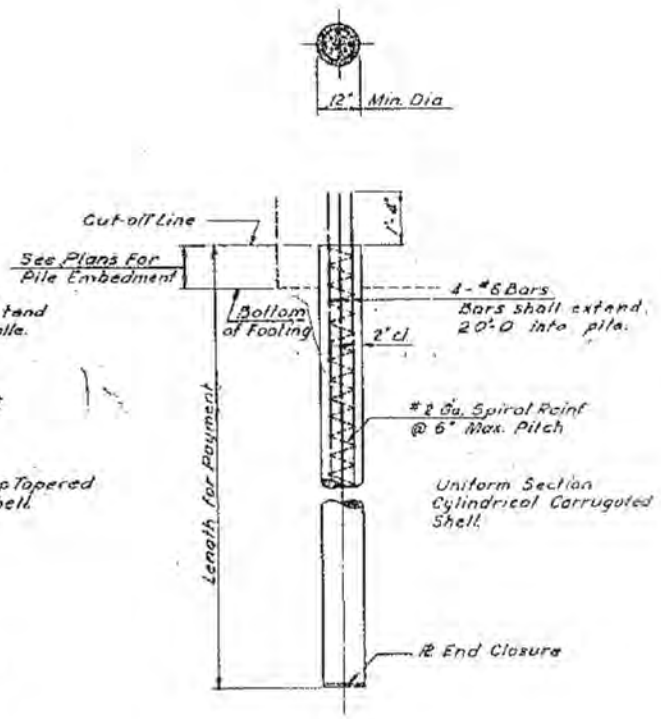


TYPE IV

ming
f the
psi

**FOR INFORMATION ONLY**

ss A Concrete.

eformed billet-steel bars
n 1615-68, Grade 40

lely held in final position during

be of a type such that the
ng is not less than the inside
member.

| | | | |
|---|---|---|---|
| UTAH STATE DEPARTMENT OF HIGHWAYS<br>SALT LAKE CITY, UTAH<br>STRUCTURES DIVISION | | | |
| NORTH LEHI - SOUTH PROVO<br>I-15 (15) OVER 100 No. ST. IN OREM (WIDENING) | | | |
| CONCRETE PILE DETAILS | | | |
| DESIGNED BY A.D.B. 1-68 | CHECKED BY W.J. 3-15-69 | F-15-6(66)267 | PROJECT NUMBER |
| DRAWN BY W.C.B.S. 2-3-69 | CHECKED BY W.B. 4-22-69 | | |
| QUANTITIES BY 3-29-69 | CHECKED BY W.B. 4-22-69 | 609+22.22 | STATION |
| APPROVAL RECOMMENDED BY 7-26-69 | | | |
| APPROVED 7-29-69 | Ray L. Gladstone | UTAH | COUNTY |
| NO. BY DATE REVISIONS | | DWG. NO. F-14.W | 13 of 15 |
| REVISIONS | | | |

FOR INFOR

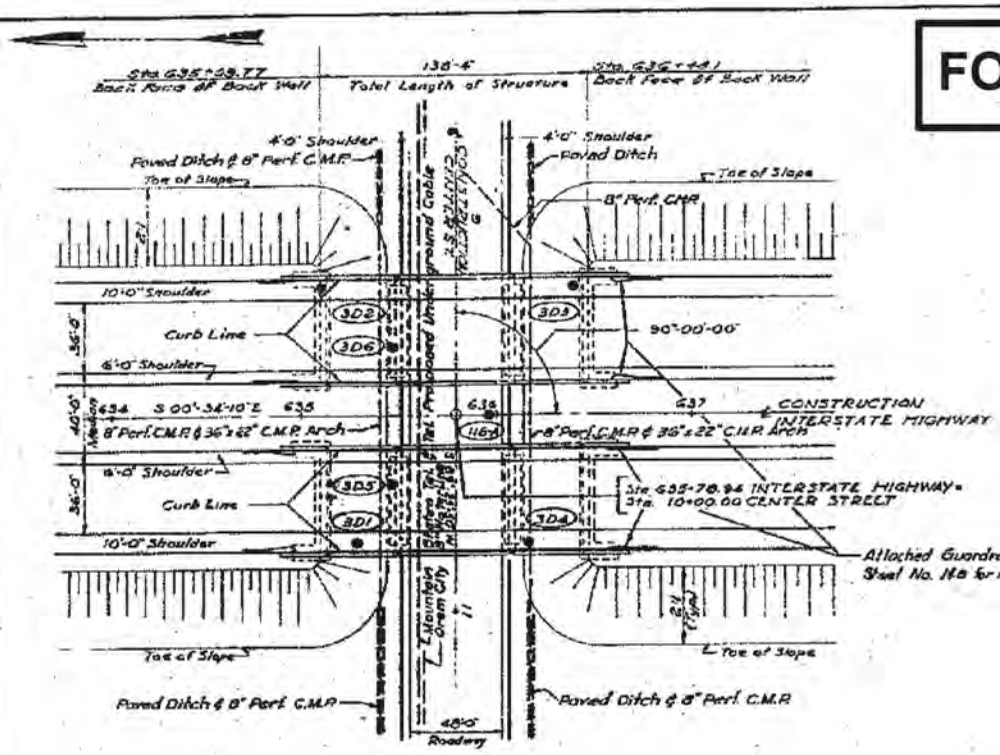


**KEY PLAN**
**SCALE: 1" = 40'**

| ESTIMATE OF QUANTITIES | | | As Const |
|---|---|---|---|
| NO. | ITEM | QUANTITY | |
| 1 | EXCAVATION FOR STRUCTURES, UNCLASSIFIED | 1868 Cu. Yds. | 1868.85 |
| 2 | IMPORTED BORROW | 300 Cu. Yds. | 329.32 |
| 3 | CLASS "A" OVERHAUL | 1300 Sta. Yds. | 1488.8 |
| 4 | GRANULAR BACKFILL | 1000 Cu. Yds. | 1158.51 |
| 5 | CONCRETE, CLASS "A" | 1355 Cu. Yds. | 1405.64 |
| 6 | REINFORCING STEEL | 270,000 Lbs. | 208,227 |
| 7 | 8" PERFORATED A.C.C.M.P. UNDERDRAIN | 350 Lin. Ft. | 344 |
| 8 | PRESTRESSED CONCRETE BEAMS TYPE II 37'-9" LONG | 28 Ea. | |
| 9 | PRESTRESSED CONCRETE BEAMS TYPE III 37'-9" LONG | 8 Ea. | |
| 10 | PRESTRESSED CONCRETE BEAMS TYPE III 36'-6" LONG | 18 Ea. | |
| 11 | ALUMINUM HANDRAIL (SINGLE RAIL) | 720 Lin. Ft. | |
| 12 | 2" RIGID STEEL CONDUIT | 380 Lin. Ft. | |
| | | | |
| 13 | CONCRETE SLOPE PROTECTION | 1,426 Sq. Yds. | |
| | | | |
| | | | |
| | | | |
| | | | |

G

DESIGN SPECIFICATIONS:
A.A.S.H.O. Standard Specific
(Sept. 1, 1958) For Prestressed Concre

ALTERNATE DESIGN:
The Method Of Prestressing T
Contractor, Subject To All Re
These Plans.

CONSTRUCTION SPECIFICATIO
Materials, Construction, An
State Standard Specification
And Supplements Thereto Whic

LIVE LOAD:
H 20-S16-44 Interstate Alternat

REINFORCEMENT:
All Reinforcing Steel Bars Sho
Designation A-15, And Shall Have

PRESTRESSED BEAM DATA:
Ultimate 28 Day Cylinder Str
Ultimate Cylinder Strength
Initial Tensioning Load Per 1/8"
Ultimate Prestressing Steel

HANDLING:
In The Handling Of Beams, Th
All Times And Must Be Picked U
Within The Beam. Disregard Of This

CONCRETE
Class "A" Concrete And Type II Low Alka
Beams.

REINFORCEMENT COVER:
Reinforcement Shall Be Accur
Concrete Covering Over The Rein
Concrete Against Earth 2" Conc

CHAMFERS:
Exposed Concrete Of Substru
Otherwise Noted, Edges Of Conc
Fillets Unless Otherwise Noted, F
Chamfers.

FOUNDATIONS:
Foundations May Be Altere
Construction.

DATUM:
All Elevations Refer To United States Co

BENCH MARK:
Iron Pin @ 21 Ft. West Of @ 16th St. 4.89 Ft.

SHOP DRAWINGS
All Shop Drawings Shall Be Approved

RMATION ONLY

| FED. ROAD DIST. NO. | STATE | FED. AID PROJ. NO. | FISCAL YEAR | SHEET NO. | TOTAL SHEETS |
|---|---|---|---|---|---|
| 11 | UTAH | I-15-6(9)285 | 1967 | | |

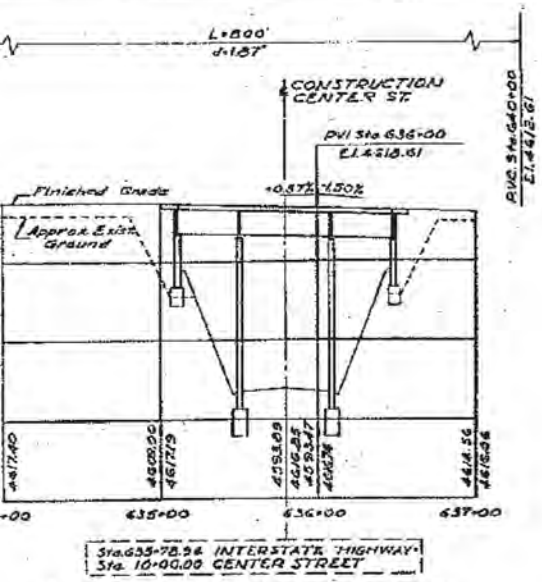


**INTERSTATE HIGHWAY PROFILE**

SCALE: 1"=10' VERT.
1"=60' HOR.

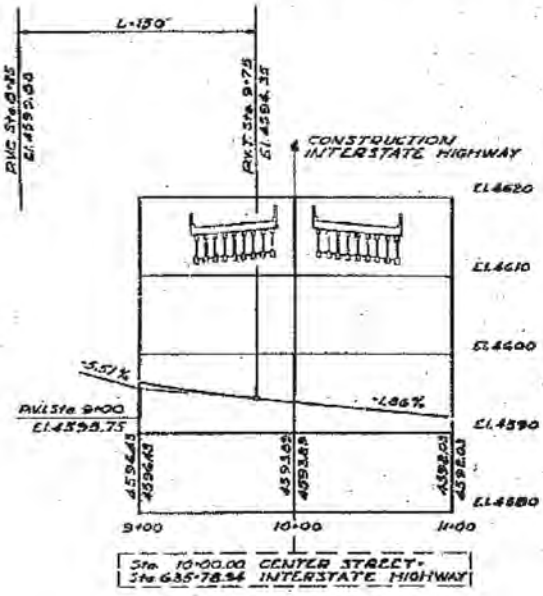


**CENTER STREET PROFILE**

SCALE: 1"=10' VERT.
1"=50' HOR.

## ENERAL NOTES

ations For Highway Bridges, 1957 Edition, And Supplement Thereto
te Bridges, & Type II & Type III A.A.S.H.O. Standard Beam Sections.

o Be Used Shall Be Optional With The
quirements Specified, Or As Noted On

NS:
d Workmanship Shall Be In Accordance With The
s For Road And Bridge Construction, 1960 Edition
h Are In Effect At The Date Of Request For Bids.

e Loading In Accordance With The A.A.S.H.O. Specifications Of 1957.

" Bar Of New Billet Steel Intermediate Grade, Conforming To A.S.T.M.
Deformations Conforming To A.S.T.M. Designation A-305

ength Of Concrete 5,000 p.s.i
f Concrete At Time Of Prestress 4,000 p.s.i.
Strand 14,000 lbs.
Strength 250,000 p.s.i.

ay Must Be Maintained In An Upright Position At
e Only By Means Of Approved Devices Anchored
Requirement May Result In Collapse Of The Member

Cement Shall Be Used Throughout Except Prestressed.

ely Placed In The Forms To Provide The Following
ormal Unless Otherwise Specified (Abutment And Bents)
ete Above Ground - 3" Deck Concrete: All Cases - 1"

ctures Shall Have 1½" Chamfers And 1½" Fillets Unless
ete Deck And Sidewalks Shall Have ¾" Chamfers And ¼"
ed Concrete Of Prestressed Beams Shall Have ¾"

d, If Necessary, To Suit Conditions Encountered In

al And Geodetic Survey Mean Sea Level Datum Of 1929

North Of ℄ Center St. Bench Mark H-21 Elevation 4610.81.

Before Fabrication Of Steel.

## INDEX OF SHEETS


| SHEET NUMBER | DESCRIPTION |
|---|---|
| 1 | KEY PLAN & INDEX SHEET |
| 2 | DECK PLAN & ELEVATION |
| 3 & 4 | BORING LOGS |
| 5 | FOUNDATION PLAN |
| 6 | ABUTMENT NO. 1 & NO. 2 |
| 7 | ABUTMENT NO. 3 & NO. 4 |
| 8 | PIERS NO. 1 & NO. 2 |
| 9 | PIERS NO. 3 & NO. 4 |
| 10 | FRAMING PLAN |
| 11 & 12 | TRANSVERSE SECTION |
| | |
| 13 | CONCRETE DETAILS |
| 14 | REINFORCING SCHEDULE |
| | RAILING DETAILS (DRG. NO. ST-1) |
| | PILE DETAILS (DRG. NO. ST-3) |
| | OVERHEAD LIGHTING DETAILS (DRG. NO. ST-5) |
| 14a | CONCRETE SLOPE PROTECTION |
| 14b | GUARDRAIL ATTACHMENT |


**KEY PLAN & INDEX SHEET**

Rev. 7-21-68 DFA
Rev. 8-23-68 RJB

DESIGN AND DRAWING BY
WESTERN ENGINEERS, INC. AND
EDWARDS AND KELCEY
CONSULTING ENGINEERS

SUBMITTED BY
CHIEF ENGINEER
UTAH ENGR. LIC. NO. 2164

L.D. 2164 L. D. DE SALLE STATE OF UTAH

UTAH STATE ROAD COMMISSION
SALT LAKE CITY, UTAH
GENERAL SUPERVISOR

OREM CENTER ST. INTERCHANGE
138'-4" Q100
STA. 635+78.94
LEHI-PROVO
UTAH COUNTY

DESIGNED BY AKE
CHECKED BY DQ
DRAWN BY AKE
DATE AUG. 1967
SCALE 1" = 10'
DATE 1-15-68

STRUCTURE 3-8

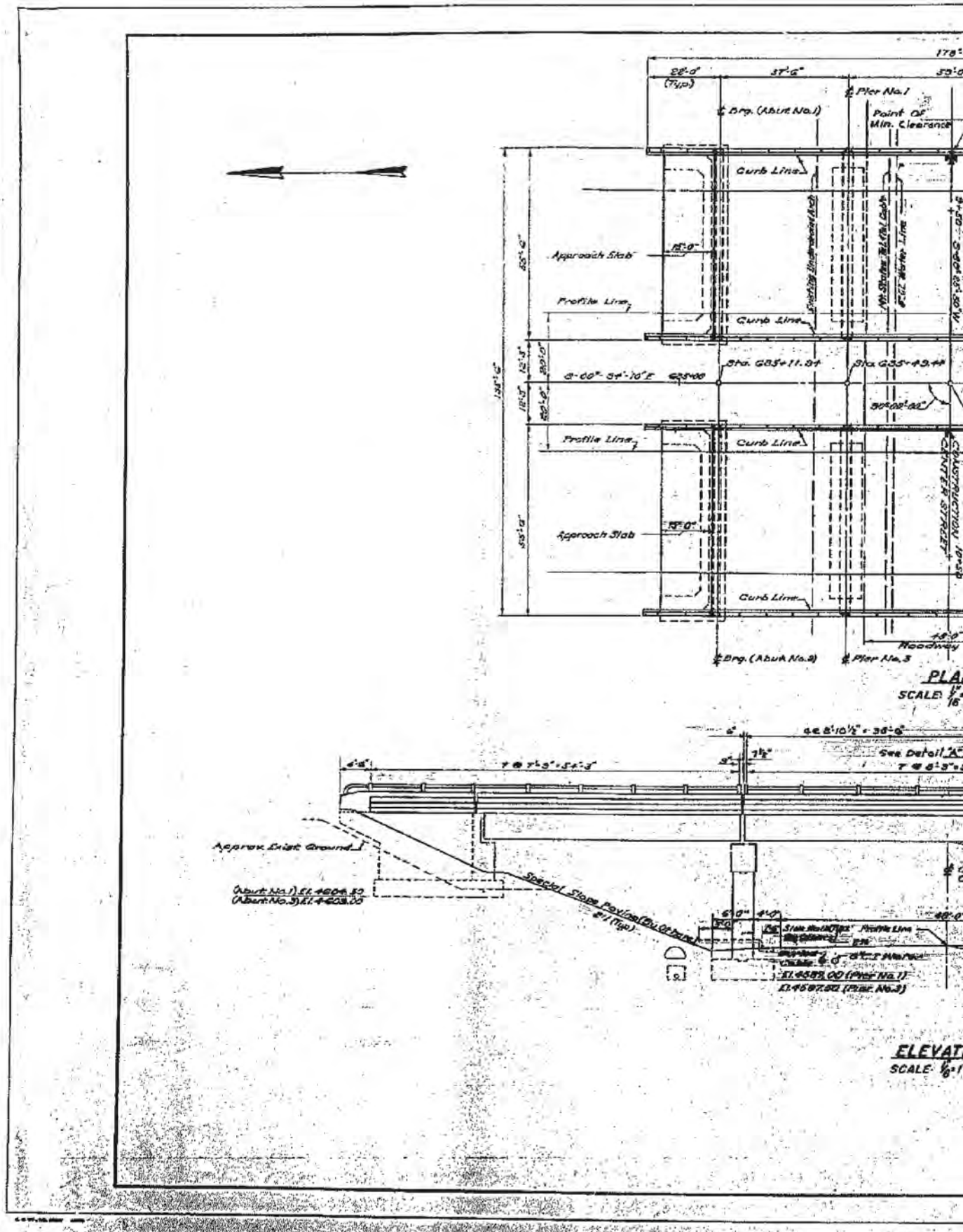
Approach Slab
Profile Line
Curb Line
Roadway
Approx. Exist. Ground
Special Slope Paving (Bituthane)
ELEVAT

[redacted]

| FEDERAL DIST. NO. | STATE | FED. AID PROJ. NO. | PROJECT NO. | SHEET NO. | TOTAL SHEETS |
|---|---|---|---|---|---|
| UT | UTAH | I-15-8(93)285 | NOT'L WAY | | |

**FOR INFORMATION ONLY**

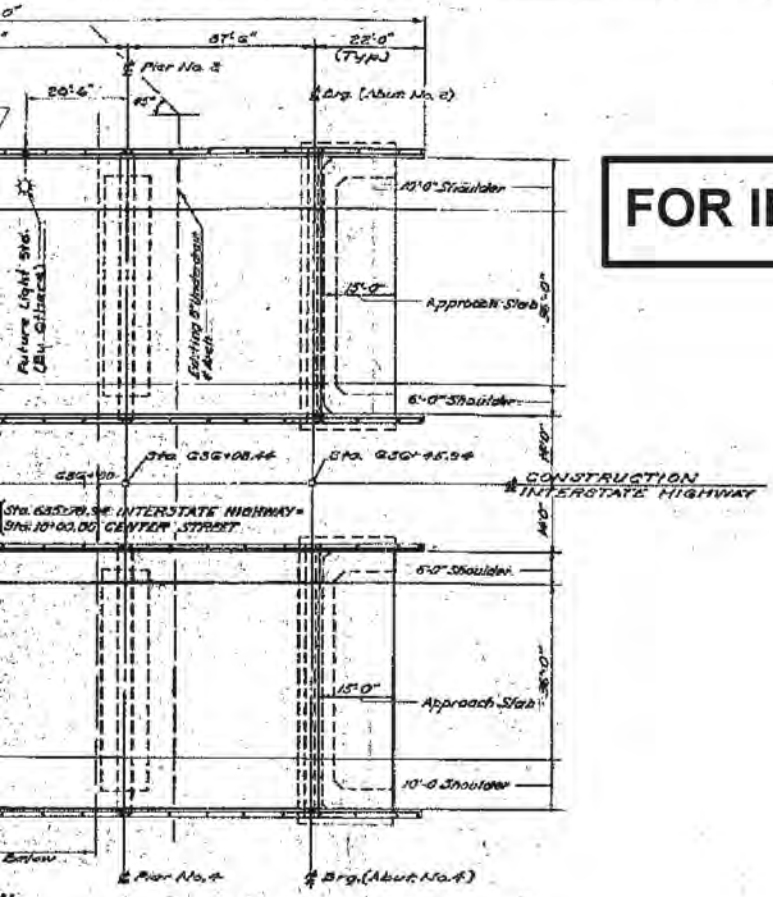


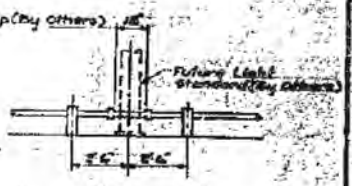


DETAIL "A"
SCALE 1/4"=1'-0"

NOTES:
FOR RAILING DETAILS SEE DWG. NO. ST-1
UTILITIES SHOWN ARE APPROXIMATE & ELEV. LOCATION EXACT LOCATION TO BE DETERMINED AT TIME OF CONSTRUCTION BY THE CONTRACTOR.
FOR JOINT FILLER DETAILS AT PARAPETS SEE SHEET 13 OF 14 SHEETS

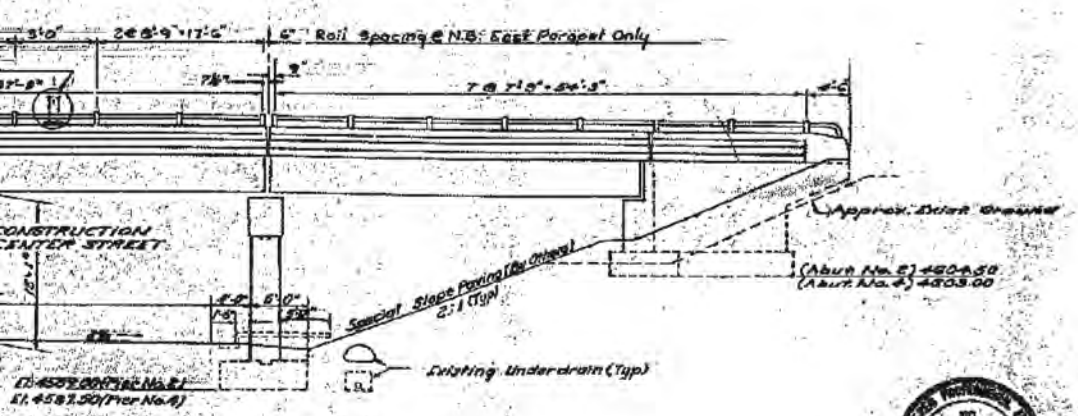


DECK PLAN & ELEVATION

Rev. 7-21-68 DFA

DESIGNED AND DRAWN BY
WESTERN ENGINEERS, INC. AND
EDWARDS and KELCEY
CONSULTING ENGINEERS

UTAH STATE ROAD COMMISSION
GREN LEE, COR. ENGR.
CHIEF ENGINEER

OREM CENTER ST.
INTERCHANGE
I-15-8 (93)
STA. 634+70.00
LOW. PROVO
UTAH COUNTY

STRUCTURE S-9

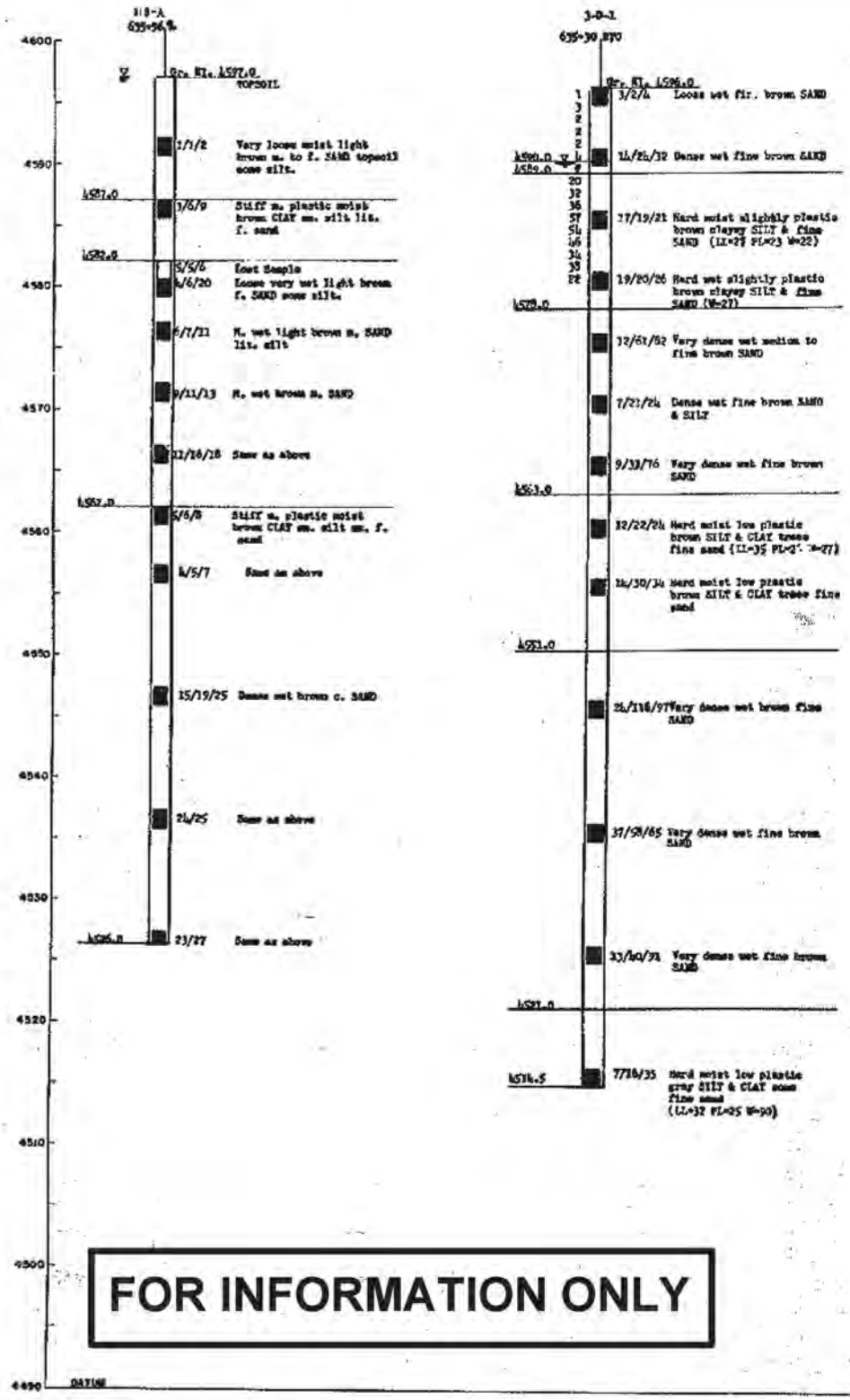


FOR INFORMATION ONLY

[redacted]

| FED. ROAD DIST. NO. | STATE | FED. AID PROJ. NO. | FISCAL YEAR | SHEET NO. | TOTAL SHEETS |
|---|---|---|---|---|---|
| UT | UTAH | I-15-8291265 | POST WAR | | |

3-D-3

836+42 | 165

Gr. El. 4597.0

| Elevation | Blows | Description |
|---|---|---|
| | 2, 6, 11 | 3/3/3 Very loose moist fine brown SAND TOPSOIL |
| 4591.0 | | |
| | 4, 9, 12 | 1/1/2 Soft wet low plastic GRAY SILT & CLAY, some fine sand tr. gravel (LL=31 PL=19 W=39) |
| 4580.0 | | |
| | 22, 26, 42 | 5/12/17 Dense moist fine brown SAND trace clay |
| | 31, 36, 41, 46, 47 | 8/16/21 Dense moist fine brown SAND |
| | | 20/30/42 Very dense wet brown fine SAND |
| 4570.0 | | 18/39/70 Very dense wet fine brown SAND |
| | | 9/14/22 Very stiff wet slightly plastic brown clayey SILT some fine SAND (LL=25 PL=23 W=27) |
| | | 6/10/19 Very stiff moist low plastic brown SILT & CLAY lit. fine SAND (W=25) |
| | | 5/8/16 Very stiff wet medium plastic brown CLAY & SILT tr. fine sand (LL=32 PL=25 W=31) |
| 4548.0 | | |
| | | 25/37/48 Very dense wet medium to fine brown SAND |
| | | 57/93/107 Very dense wet fine brown SAND trace clay |
| | | 29/48/76 Very dense moist fine dark gray SAND |
| 4522.0 | | |
| | | 4/11/43 Very stiff wet medium plastic dark gray CLAY & SILT trace fine sand (LL=40 PL=25 W=30) |
| 4511.0 | | |
| | | 40/47/73 Very dense wet medium to fine gray SAND |
| 4502.0 | | |
| 4485.5 | | 31/47/55 Hard wet medium plastic gray CLAY & SILT little fine sand (LL=26 PL=21 W=26) |

## LEGEND

Boring No. → 1-A-1

Interstate Station → 22+63 RTE → Offset

Ground Elevation → Gr. El. 4562

Ground Water Table Elevation 4557.1 ▽

Number of Blows Used to drive casing 12 inches with 300 lb. hammer falling 2 ft. (Typical)

Strata Change Elevation (Typical) 4590

Boring Advanced Without Casing

Location of Sample (Typical) 4559

Bottom of Boring Elevation 4535.5

Number of Blows Used to drive 1-3/8" I.D. sampler with 140 lb. hammer falling 30 inches — 1st. 6 inches, 2nd. 6 inches, 3rd. 6 inches

| Elevation | Blows | Description |
|---|---|---|
| 4560 | 3, 7, 9, 12, 17 | 2/4/5 Stiff m. plastic brown clay some silt-TOPSOIL |
| | 10, 17, 22, 33, 40 | 11/13/17 M. dense wet tan m. to c. SAND, some silt, tr. f. gravel |
| 4550 | 26, 43, 65, 77, 106 | 35/21/30 Dense wet tan m. to c. SAND, some gravel |
| | | 7/6/8 Stiff, low plastic brown CLAY & SILT, tr. f. sand (LL = 40, PL = 28, W = 32) |
| 4539 | | 11/10/12 Very stiff, plastic gray CLAY & SILT, tr. f. sand (W = 35, qu = 12/sq ft) |
| | | 9/12/20 Very stiff varved plastic gray silty CLAY & f. silty SAND |

visual soil description for each sample and results of classification tests, if any (Typical)

ABBREVIATIONS IF AND WHEN USED:

| | | |
|---|---|---|
| br. = brown | m. = medium | LL = Liquid Limit in % |
| gr. = gray | c. = coarse | PL = Plastic Limit in % |
| org. = organic | sm. = some | W = Natural Moisture Content in % |
| f. = fine | tr. = trace | qu = Unconfined compression test from pocket penetrometer in T/ft.² |
| v. f. = very fine | lit. = little | |

# BORING LOGS

SHEET 9 OF 11 SHEETS

UTAH STATE HIGH COMMISSION
SALT LAKE CITY, UTAH

OREM CENTER ST. INTERCHANGE
138'-4" G TO G
STA. 635+78.94 I-15-4 (5)265
LEHI-PROVO UTAH COUNTY

DESIGN AND DRAWING BY
WESTERN ENGINEERS, INC. AND
EDWARDS AND KELCEY
CONSULTING ENGINEERS

SUBMITTED BY [signature] CHIEF ENGINEER
UTAH ENGR. LIC. NO. 2164

DRAWN BY KCK DATE AUGUST
DESIGN BY KCK DATE July 27 1960
TRACED BY KCK APPROVED R.E. Sargent
CHECKED BY KCK

No. No. Work No. F-15

STRUCTURE 3-D

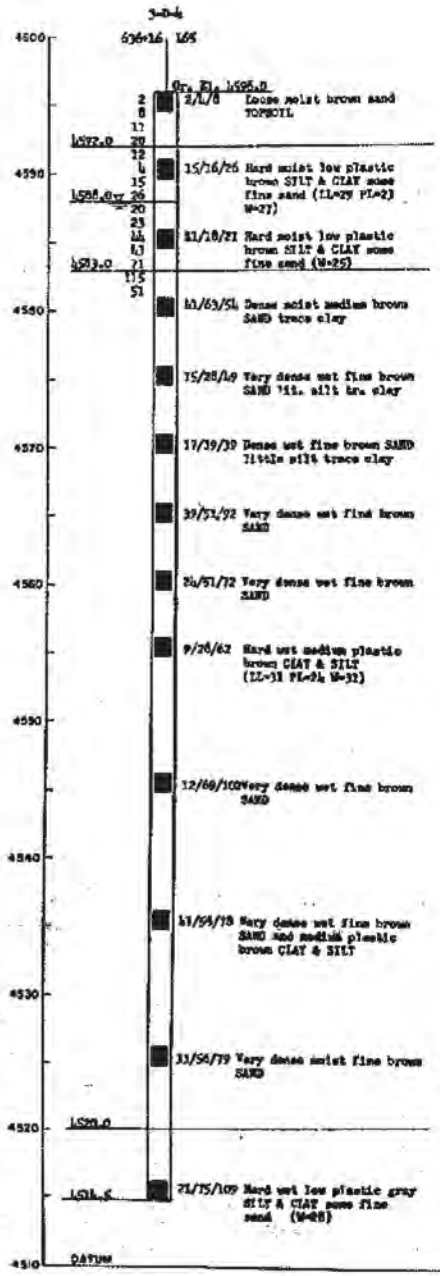

**FOR INFORMATION ONLY**

[redacted]

| FED. ROAD DIST. NO. | STATE | FED. AID PROJ. NO. | FISCAL YEAR | SHEET NO. | TOTAL SHEETS |
|---|---|---|---|---|---|
| UT | UTAH | I-15-6(9)265 | POST WAR | | |

1-2-5

N35

Gr. El. 1597.0

| | |
|---|---|
| 3/4/7 | Loose moist brown sandy TOPSOIL |
| 2/3/2 | Medium wet brown clayey SILT some f. to c. sand |
| 17/24/32 | Hard moist brown clayey SILT |
| 6/11/24 | Very stiff, low plastic, moist brown SILT & CLAY |
| 11/30/48 | Very dense moist gray f. to m. SAND |
| 9/11/19 | Medium wet gray v.f. SAND & SILT |
| 18/33/56 | Very dense moist gray f. to m. SAND trace silt |

## LEGEND

Boring No. — 1-2-2

Interstate Station — 22+63 — 272 — Offset

Ground Elevation — Gr. El. 1562

Ground Water Table Elevation — 1557.1

Number of Blows Used to drive casing 18 inches with 300 lb. hammer falling 2 ft. (Typical)

Strata Change Elevation (Typical) — 1550

Boring Advanced Without Casing

Location of Sample (Typical) — 1539

Bottom of Boring Elevation — 1535.5

| | |
|---|---|
| 2/4/5 | Stiff m. plastic brown clay some silt-TOPSOIL |
| 11/13/17 | M. dense wet tan m. to c. SAND, some silt, tr. f. gravel |
| 35/21/30 | Dense wet tan m. to c. SAND, some gravel |
| 7/4/8 | Stiff, low plastic brown CLAY & SILT, tr. f. sand (LL = 40, PL = 28, W = 32) |
| 11/10/12 | Very stiff, plastic gray CLAY & SILT, tr. f. sand (W = 35, qu = 2T/ft.) |
| 9/12/20 | Very stiff varved plastic gray silty CLAY & f. silty SAND |

Number of Blows Used to drive 1-3/8" I.D. sampler with 140 lb. hammer falling 30 inches — 1st. 6 inches, 2nd. 6 inches, 3rd. 6 inches

Visual soil descriptions for each sample and results of classification tests, if any (Typical)

ABBREVIATIONS (IF ANY WHEN USED)

br. = brown
gr. = gray
org. = organic
f. = fine
v. f. = very fine
m. = medium
c. = coarse
sm. = some
tr. = trace
lit. = little
LL = Liquid Limit in %
PL = Plastic Limit in %
W = Natural Moisture Content in %
qu = Unconfined compression test from pocket penetrometer in T/ft.

## BORING LOGS

SHEET 4 OF 11 SHEETS

UTAH STATE ROAD COMMISSION
SALT LAKE CITY, UTAH
BRIDGE DEPARTMENT

OREM CENTER ST. INTERCHANGE
136'-4" O-TO D.
STA. 635+78.94 — I-15-6 (9)265
LEHI-PROVO — UTAH COUNTY

DESIGNED BY EWK
DRAWN BY EWK
CHECKED BY EWK
SUBMITTED BY R. Deville, CHIEF ENGINEER
UTAH ENGR. LIC. NO. 2169

DESIGN AND DRAWING BY
WESTERN ENGINEERS, INC. AND
EDWARDS AND KELCEY
CONSULTING ENGINEERS

REGISTERED PROFESSIONAL ENGINEER
NO. 2169
R. R. DEVILLE
STATE OF UTAH

NO. F-15

STRUCTURE 3-D

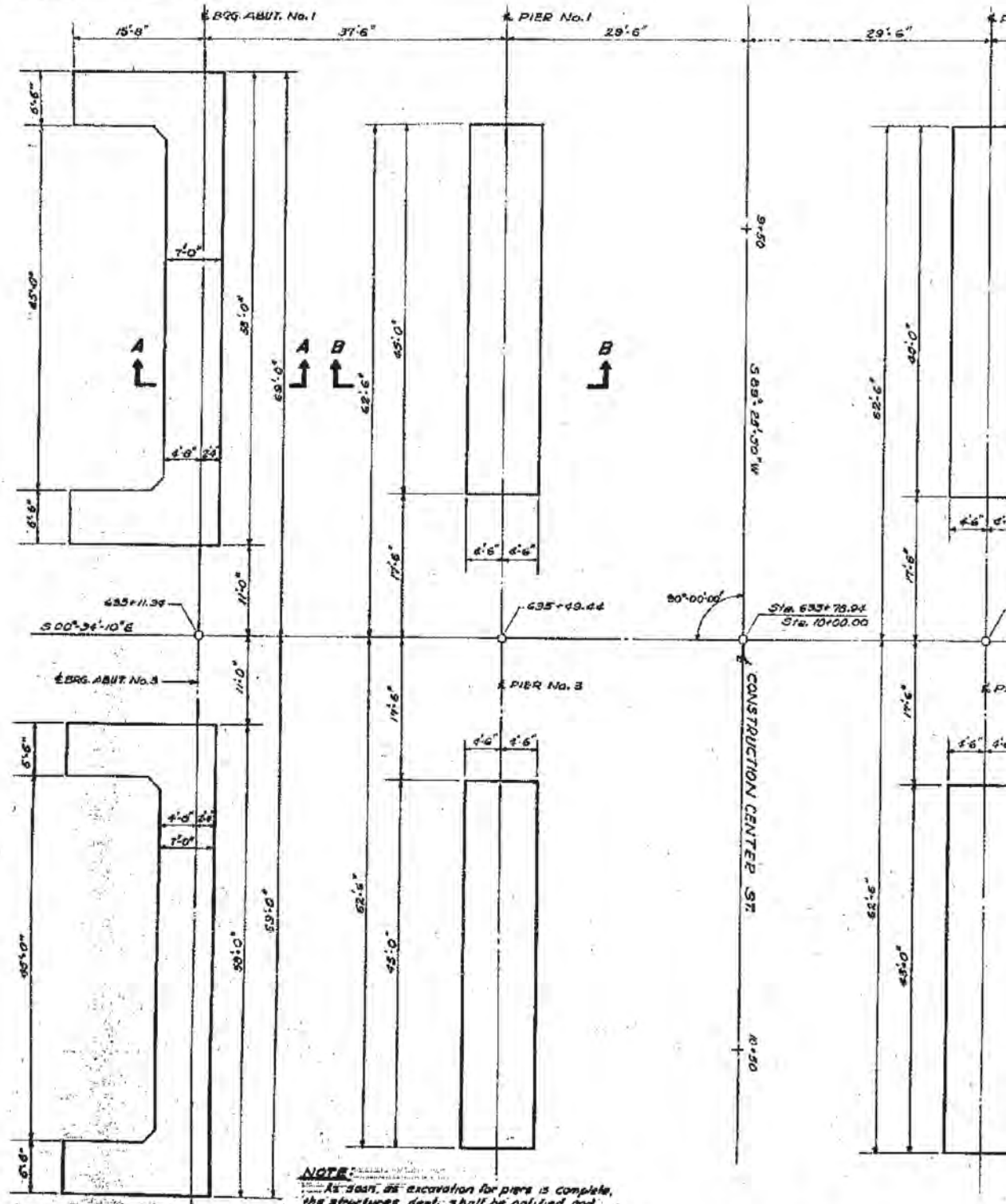


**NOTE:**
As soon as excavation for piers is complete, the structures dept. shall be notified, and shall make an examination of sub-soil materials before further work is done on the footings.

## FOUNDATION PLAN

SCALE: 1/8" = 1'-0"

| FED. DESIGN DIST. NO. | STATE | FED. AID PROJ. NO. | FINAL TITLE | SHEET NO. | TOTAL SHEETS |
|---|---|---|---|---|---|
| UT | UTAH | I-15-2(9)263 | POST WAR | | |

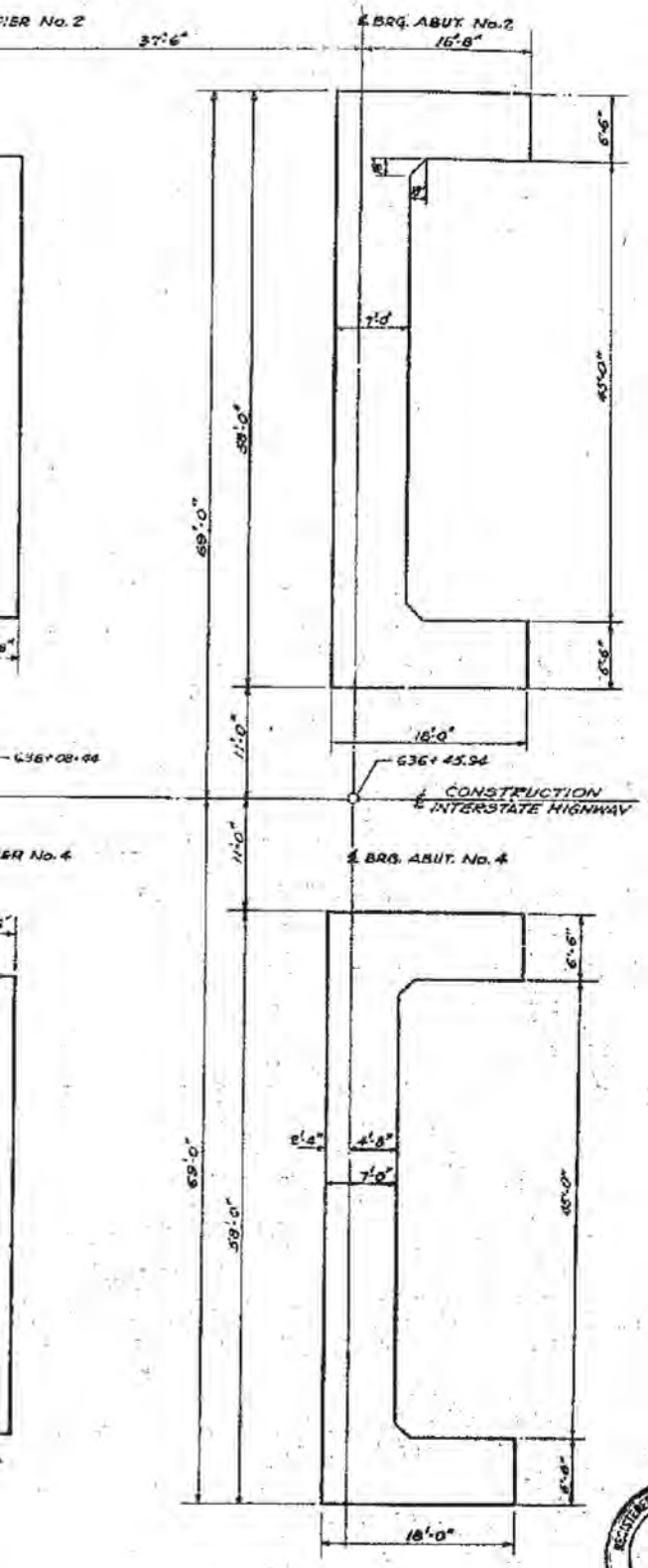


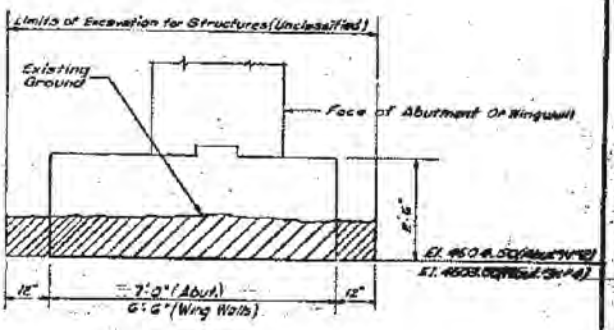


**SECTION A–A**
SCALE: ½" = 1'-0"

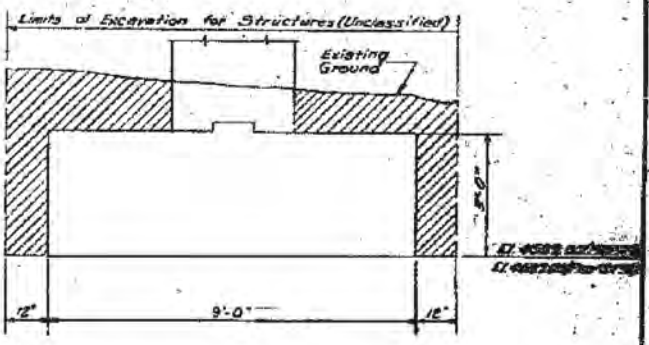


**FOR INFORMATION ONLY**

**SECTION B–B**
SCALE: ½" = 1'-0"

**FOUNDATION PLAN**

Rev. 7-21-68 DFA

REGISTERED PROFESSIONAL ENGINEER
NO. 2134
J. R. LEWIVILLE
STATE OF UTAH

DESIGN AND DRAWING BY
WESTERN ENGINEERS, INC. AND
EDWARDS AND KELCEY
CONSULTING ENGINEERS

SUBMITTED BY J. R. Lewiville
CHIEF ENGINEER
UTAH ENGR. LIC. NO. 2164

UTAH STATE ROAD COMMISSION
ONLY LIC. ENG. ENG.
DIRECT ENGINEER

**OREM CENTER ST. INTERCHANGE**
136-4 G TO G.
STA 636+76.94
I-15-2(9)263
UTAH COUNTY

F-1R

STRUCTURE 2-G

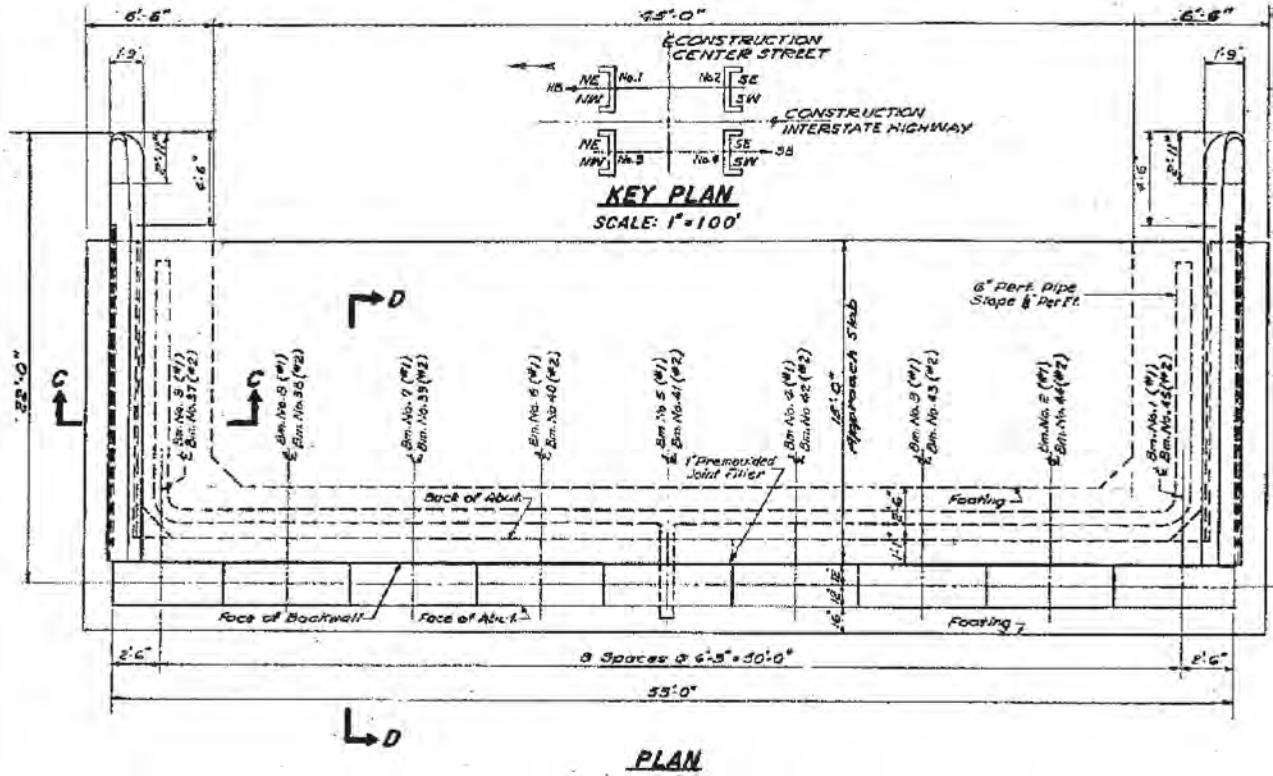


**FOR INFORMATION ONLY**

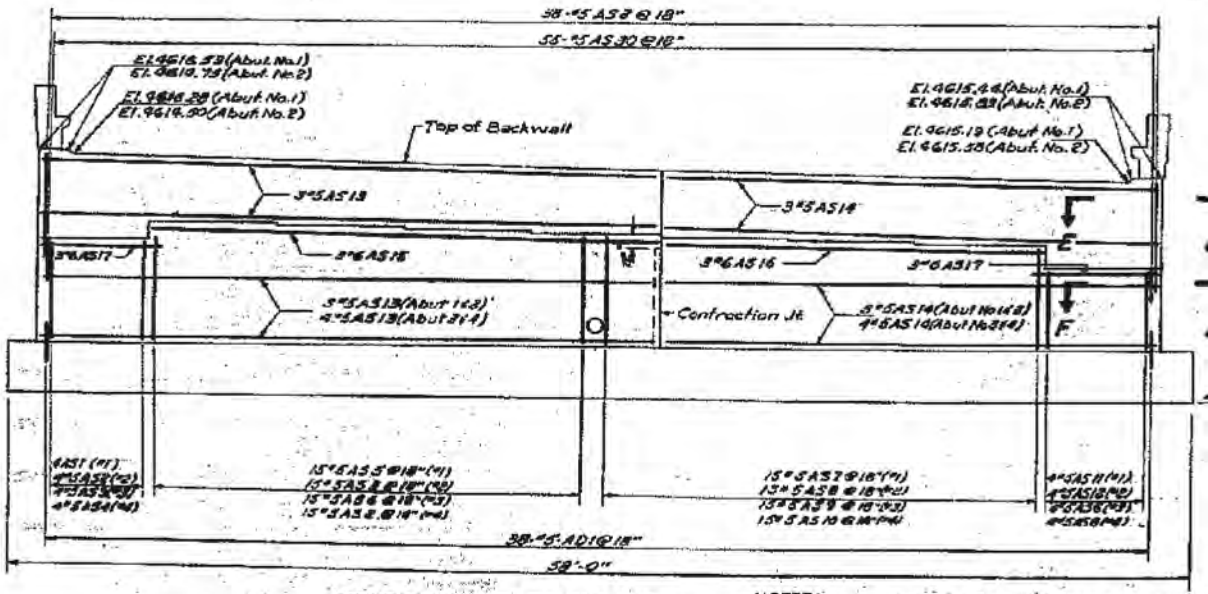


REINFORCEMENT FRONT FACE ELEVATION
SCALE: 1/4" = 1'-0"

NOTES:
FOR ANCHOR BOLT LOCATION PLAN SEE SHEET 7 OF
FOR FOOTING PLAN SEE SHEET 5 OF 14 SHEETS
FOR SECTIONS C-C, D-D, E-E, F-F, & CONTRACTI
SHEET 7 OF 14 SHEETS.
REINFORCEMENT TO BE PLACED TO AVOID OBST

DGN Files 1P, PWpdms\16721\4433_F-15-06_Forum\Foundation
02-MAY-2005

| FED. ROAD DIST. NO. | STATE | FED. AID PROJ. NO. | FISCAL YEAR | SHEET NO. | TOTAL SHEETS |
|---|---|---|---|---|---|
| 07 | UTAH | I-15-6(9)265 | 1967 | | |

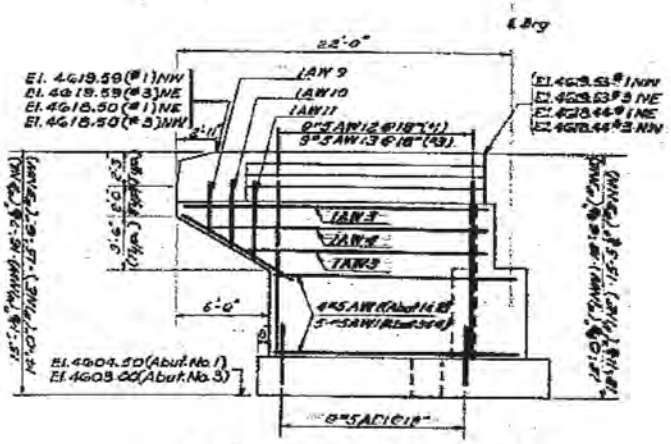


REINFORCEMENT FRONT FACE

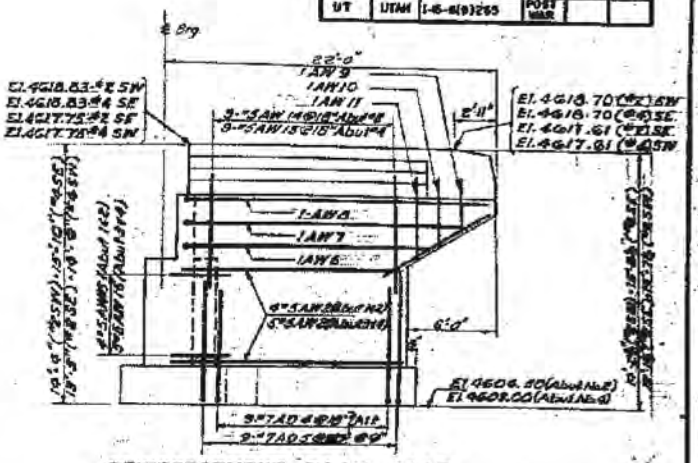


REINFORCEMENT BACK FACE

ELEVATION OF WINGWALLS

SCALE: 3/16" = 1'-0"

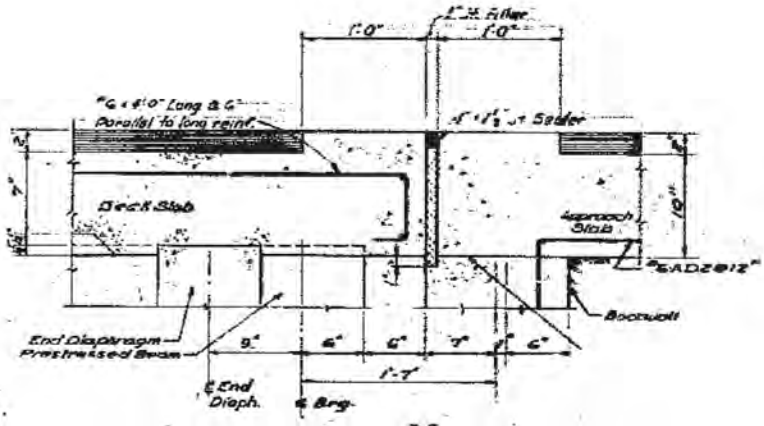


DETAIL "A"

SCALE: 1½" = 1'-0"

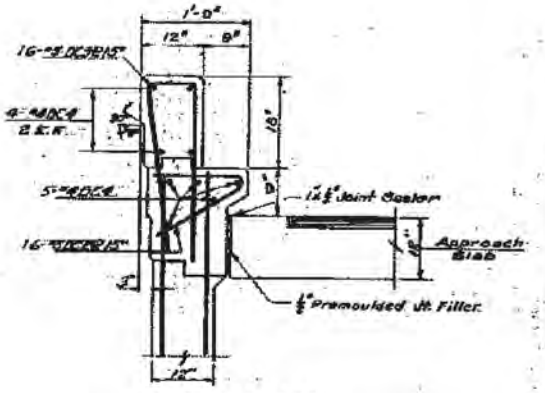


DETAIL "B"

SCALE: 3/4" = 1'-0"

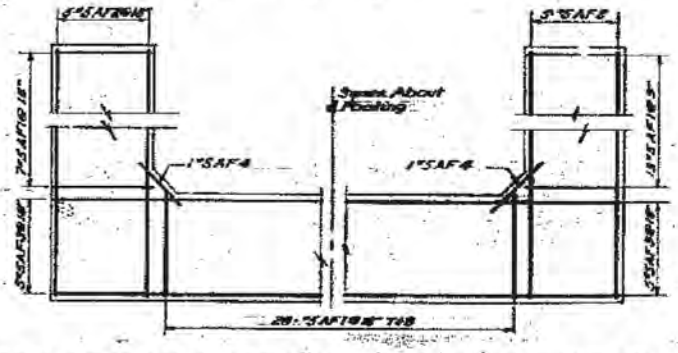


REINFORCEMENT BOTTOM REINFORCEMENT TOP

PLAN OF FOOTING

SCALE: 3/16" = 1'-0"

| BEAM NO. | ELEVATION ABUT. NO. 1 | BEAM NO. | ELEVATION ABUT. NO. 2 |
|---|---|---|---|
| 1 | 4611.47 | 37 | 4610.77 |
| 2 | 4612.11 | 38 | 4611.49 |
| 3 | 4612.51 | 39 | 4611.81 |
| 4 | 4612.64 | 40 | 4611.93 |
| 5 | 4612.77 | 41 | 4612.05 |
| 6 | 4612.90 | 42 | 4612.21 |
| 7 | 4613.03 | 43 | 4612.34 |
| 8 | 4613.16 | 44 | 4612.57 |
| 9 | 4612.51 | 45 | 4611.81 |

ABUTMENTS NO. 1 & 2

REGISTERED PROFESSIONAL ENGINEER NO. 2164 J. R. MENVILLE STATE OF UTAH

Rev. 7-21-69 DFA

DESIGN AND DRAWING BY
WESTERN ENGINEERS, INC. AND
EDWARDS AND KELCEY
CONSULTING ENGINEERS

SUBMITTED BY

UTAH ENGR. LIC. NO. 2164

UTAH STATE ROAD COMMISSION

OREM CENTER ST. INTERCHANGE (36-4) O.T.O.D.

STA. 835+78.04 LEHI-PROVO

UTAH COUNTY

STRUCTURE 96

...14 SHEETS.

...ON JOINT SEE

...EDUCTIONS.

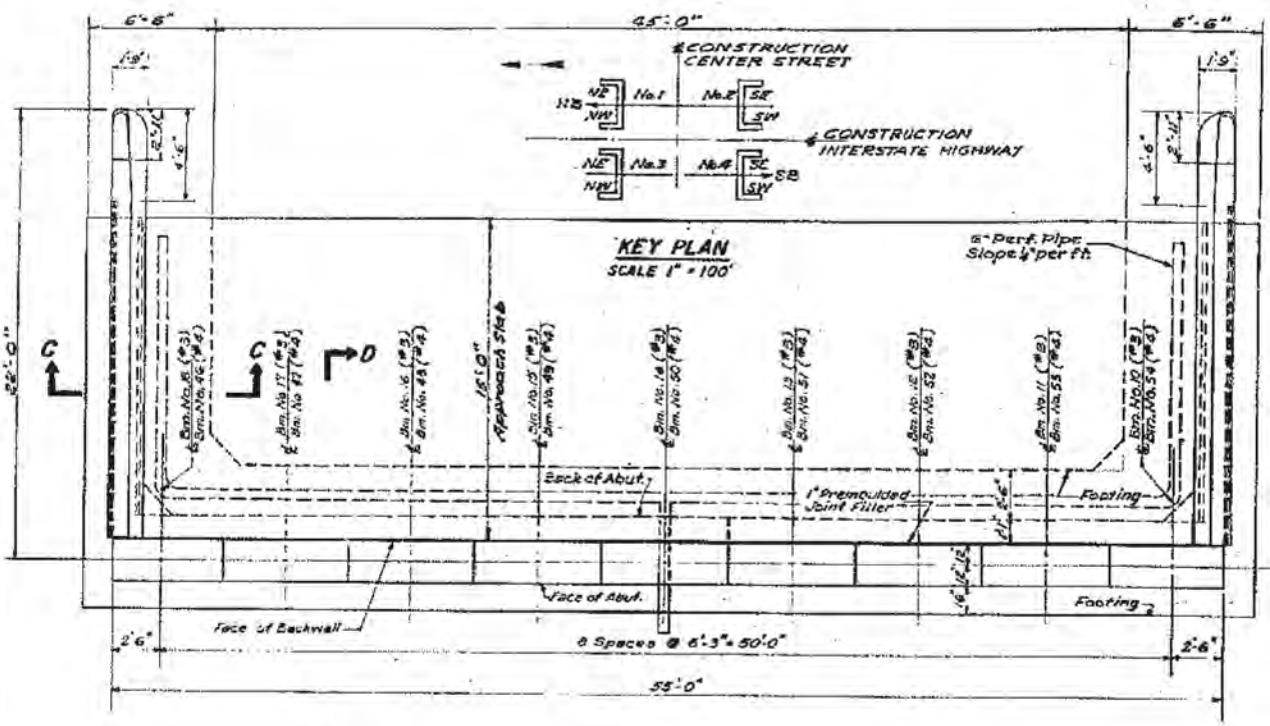


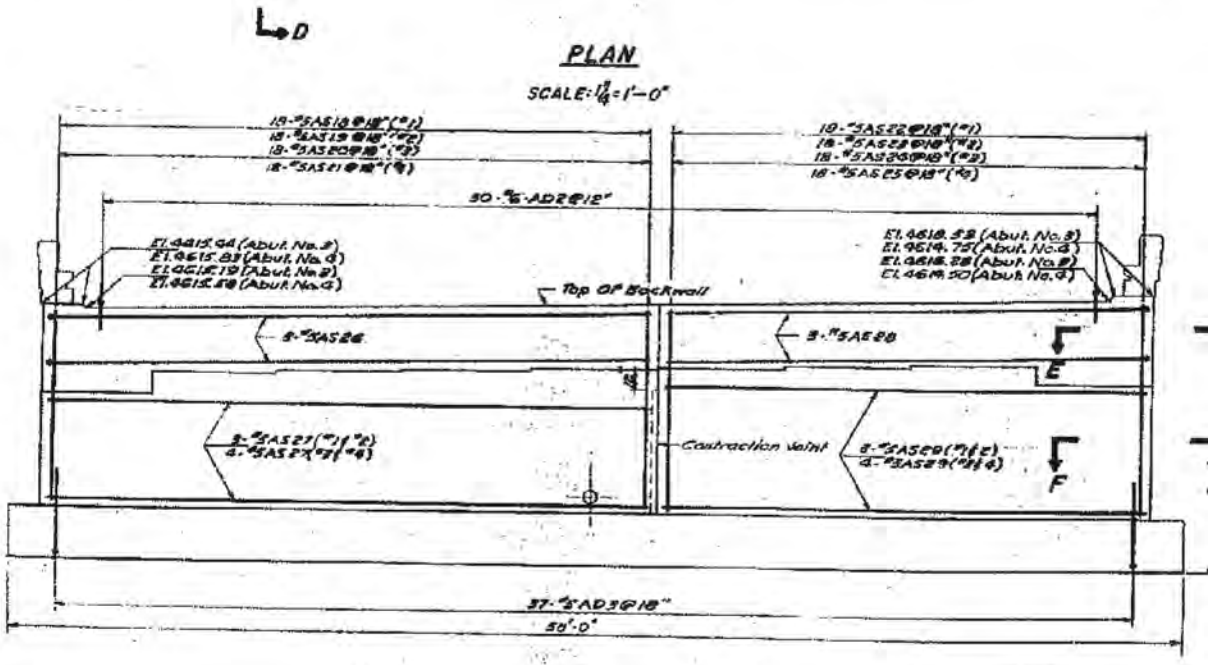


REINFORCEMENT BACKFACE
ELEVATION
SCALE: 1¼" = 1'-0"

FOR INFORMATION O

| FED. ROAD DIST. NO. | STATE | FED. AID PROJ. NO. | FISCAL YEAR | SHEET NO. | TOTAL SHEETS |
|---|---|---|---|---|---|
| UT | UTAH | I-15-E(9)265 | POST WAR | | |

NOTE: FOR CURB & PARAPET DETAILS SEE DRG. NO. ST-1.

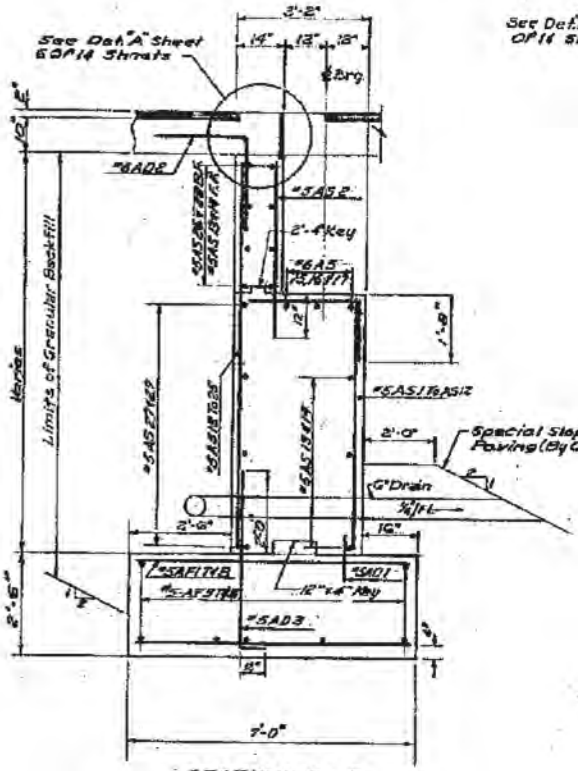


SECTION D-D

SCALE: 1/2" = 1'-0"

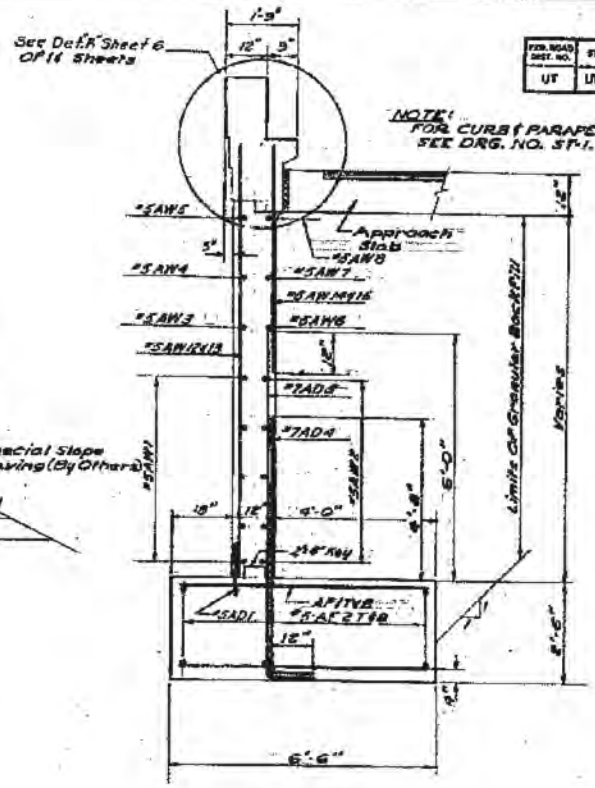


SECTION C-C

SCALE: 1/2" = 1'-0"

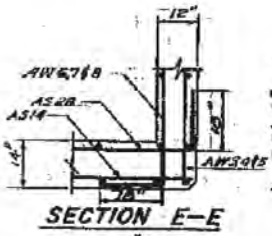


SECTION E-E

SCALE: 1/2" = 1'-0"

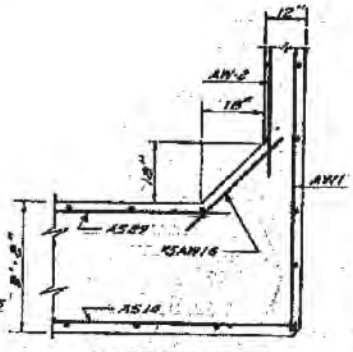


SECTION F-F

SCALE: 1/2" = 1'-0"

| BEAM NO. | ELEVATION ABUT. NO. 3 | BEAM NO. | ELEVATION ABUT. NO. 4 |
|---|---|---|---|
| 10 | 4612.51 | 46 | 4611.82 |
| 11 | 4613.16 | 47 | 4612.41 |
| 12 | 4613.35 | 48 | 4612.34 |
| 13 | 4612.90 | 49 | 4612.51 |
| 14 | 4612.77 | 50 | 4612.05 |
| 15 | 4612.61 | 51 | 4611.95 |
| 16 | 4612.51 | 52 | 4611.82 |
| 17 | 4612.33 | 53 | 4611.69 |
| 18 | 4611.46 | 54 | 4610.77 |

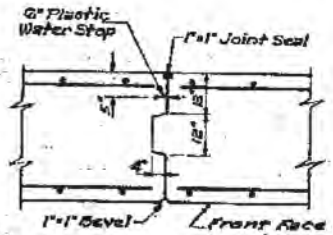


CONTRACTION JOINT DETAIL

SCALE: 1/2" = 1'-0"

NOTES:
FOR FOOTING PLAN SEE SHEET 5 OF 14 SHEETS.
FOR WINGWALL ELEVATION & FOOTING REINFORCEMENT SEE SHEET 6 OF 14 SHEETS.
REINFORCEMENT TO BE PLACED TO AVOID OBSTRUCTIONS.

ABUTMENTS NO. 3 & 4

Rev. 7-21-60 DFA

ONLY

REGISTERED PROFESSIONAL ENGINEER NO. 2164 J. E. HOWELLS STATE OF UTAH

DESIGN AND DRAWING BY WESTERN ENGINEERS, INC. AND EDWARDS AND KELCEY CONSULTING ENGINEERS

SUBMITTED BY J. E. Howells

UTAH ENGR. LIC. NO. 2164

UTAH STATE ROAD COMMISSION
SALT LAKE CITY, UTAH
BRIDGE DEPARTMENT

OREM CENTER ST. INTERCHANGE
150'-4" O. TO O.
STA. 635+78.94 I-15-E (9) 265
LEHI-PROVO UTAH COUNTY

DRAWN BY J. L. B.
DESIGN BY N. A. C.
TRACED BY
CHECKED BY J. E.

F-15

STRUCTURE 3-4

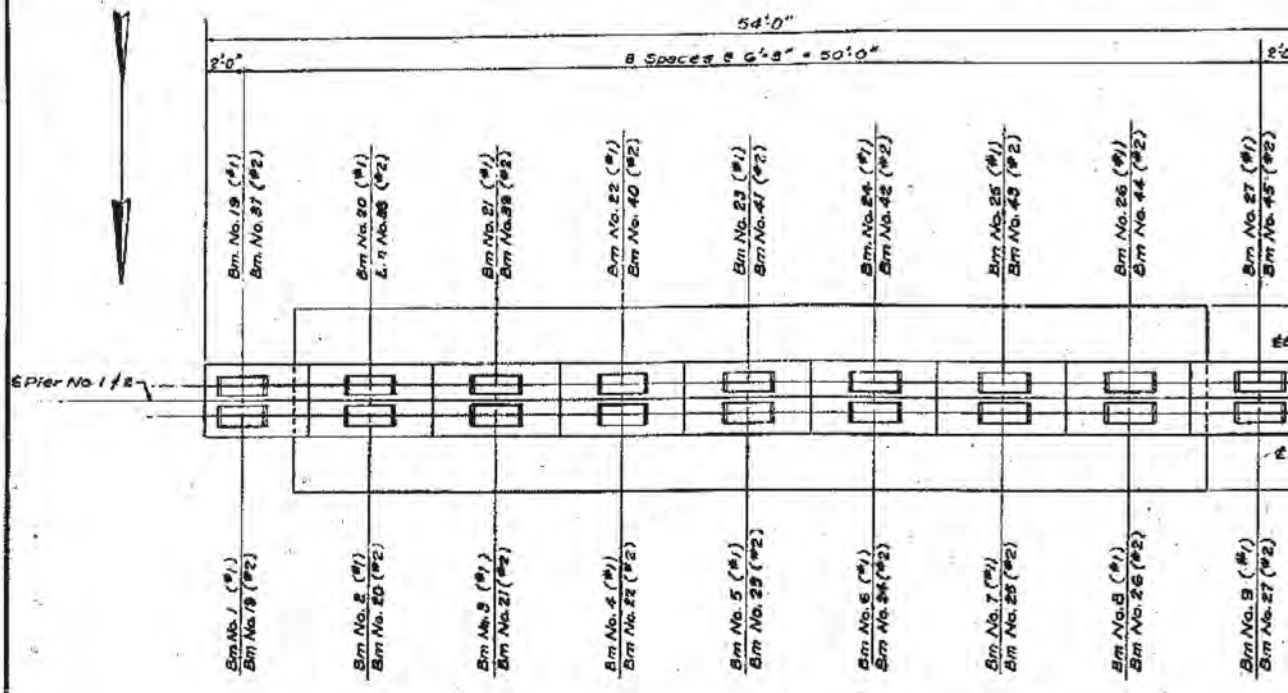


PLAN—PIERS NO. 1 & 2
SCALE: 1/4" = 1'-0"

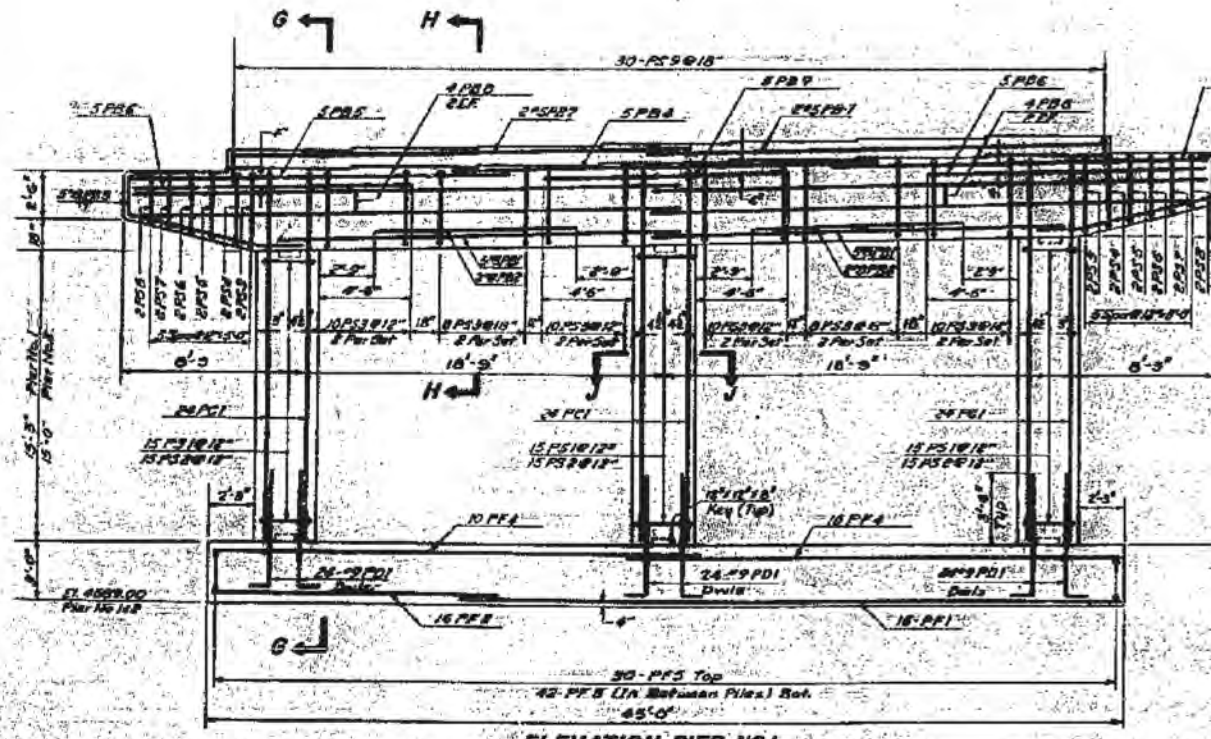


ELEVATION—PIER NO. 1
PIER NO. 2 SIMILAR—OPPOSITE HAND
SCALE: 1/4" = 1'-0"

**FOR INFORMATION ONLY**

| | | | | | |
|---|---|---|---|---|---|
| UT | | | | | |

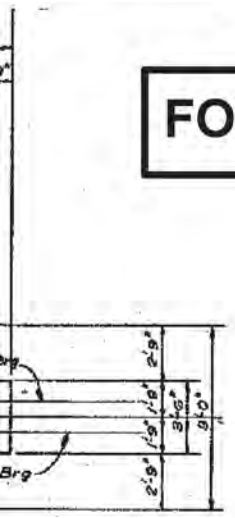


NOTE:
All beam seat bearing areas on piers and abutments shall be poured high and rubbed or ground to the grades shown within a tolerance of ± 1/8". Finished bearing areas must be level and smooth so as to provide even bearing over the entire area of the Elastomeric bearing pad, and high or low spots will not be permitted.

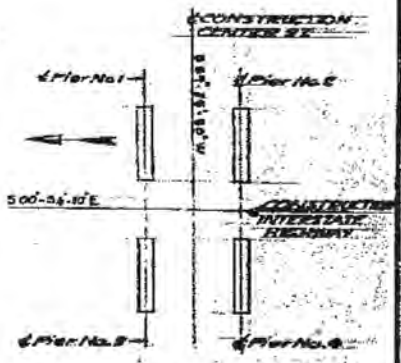


**KEY PLAN**
SCALE 1" = 50'

| BEAM NO. | ELEVATION PIER No. 1 | BEAM NO. | ELEVATION PIER No. 2 |
|---|---|---|---|
| 1 | 4611.35 | 18 | 4611.15 |
| 2 | 4612.26 | 19 | 4611.13 |
| 3 | 4612.37 | 20 | 4611.11 |
| 4 | 4612.50 | 21 | [illegible] |
| 5 | [illegible] | 22 | [illegible] |
| 6 | 4612.76 | 23 | [illegible] |
| 7 | 4612.89 | 24 | [illegible] |
| 8 | 4613.02 | 25 | [illegible] |
| 9 | 4612.89 | 26 | [illegible] |
| 19 | 4611.54 | 37 | [illegible] |
| 20 | 4611.47 | 38 | [illegible] |
| 21 | 4611.50 | 39 | [illegible] |
| 22 | 4611.33 | 40 | [illegible] |
| 23 | 4611.16 | 41 | [illegible] |
| 24 | 4611.99 | 42 | [illegible] |
| 25 | 4611.72 | 43 | [illegible] |
| 26 | 4612.26 | 44 | [illegible] |
| 27 | 4612.39 | 45 | [illegible] |

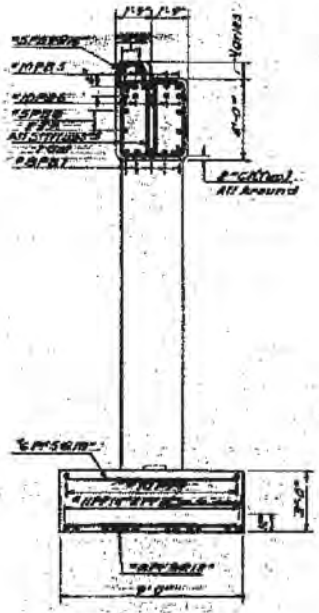


**SECTION G-G**
SCALE: 1/4" = 1'-0"

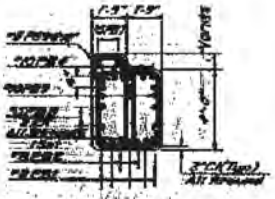


**SECTION H-H**
SCALE: 1/4" = 1'-0"

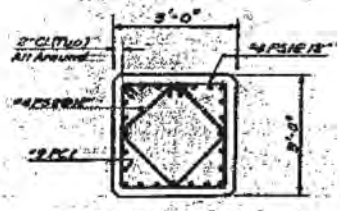


**SECTION J-J (TYP.)**
SCALE: 1/2" = 1'-0"

**PIERS NO. 1 & 2**

Rev. 7-21-68 BFA

DESIGNED AND DRAWN BY
WESTERN ENGINEERS, INC. AND
EDWARDS AND KELCEY
CONSULTING ENGINEERS

OREM CENTER ST.
INTERCHANGE
[illegible] 8 TOG.

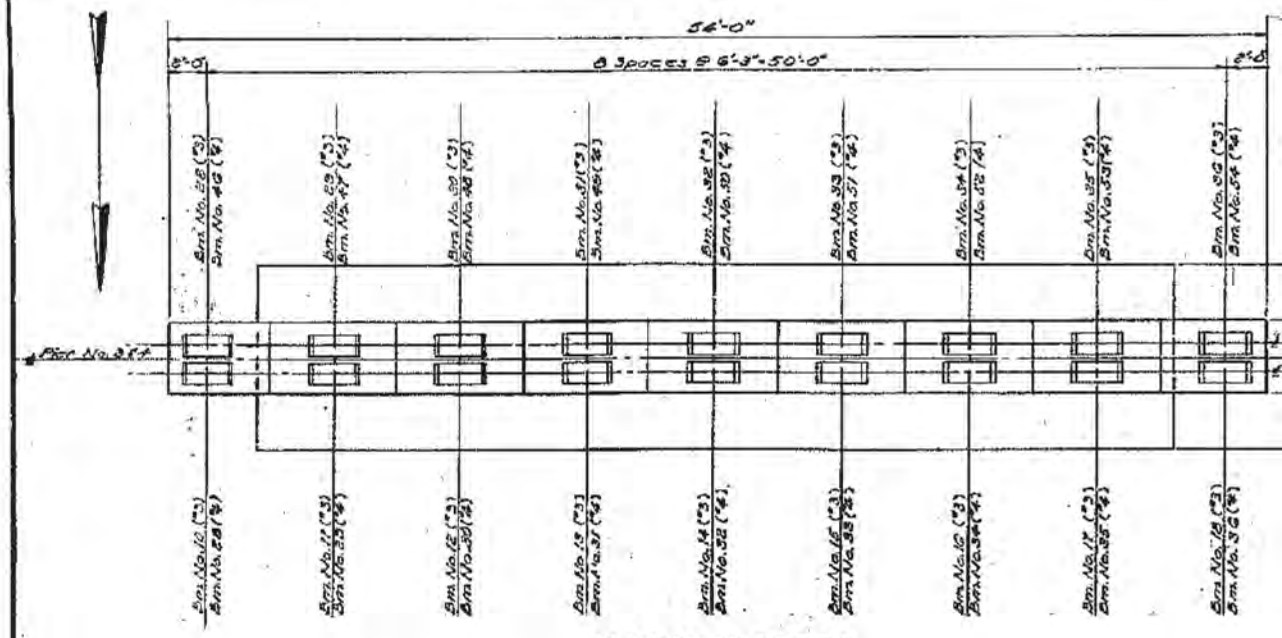


**PLAN-PIERS NO. 3&4**

SCALE: 1/4" = 1'-0"

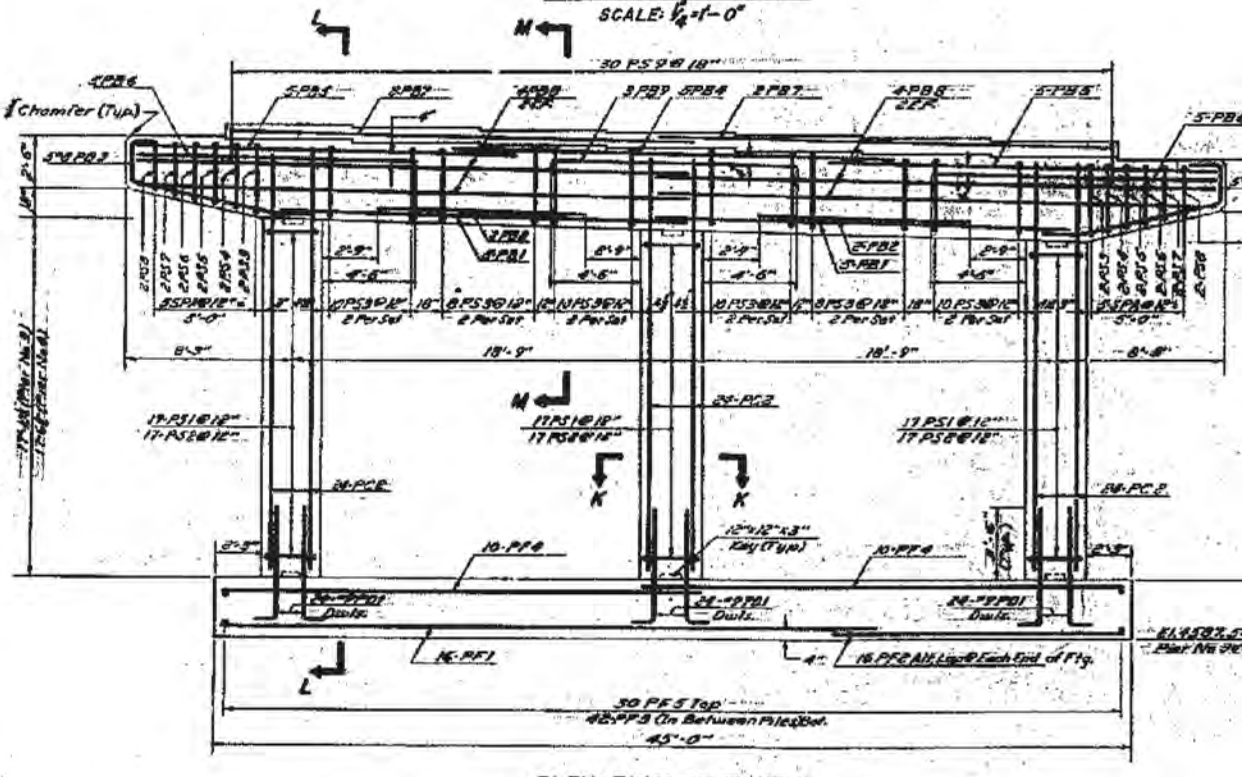


**ELEVATION-PIER NO. 3**

**PIER NO. 4 SIMILAR-OPPOSITE HAND**

SCALE: 1/4" = 1'-0"

| FED. ROAD PROJ. NO. | STATE | FED. AID PROJ. NO. | FISCAL YEAR | SHEET NO. | TOTAL SHEETS |
|---|---|---|---|---|---|
| UT | UTAH | I-15-4(9)265 | POST WAR | | |

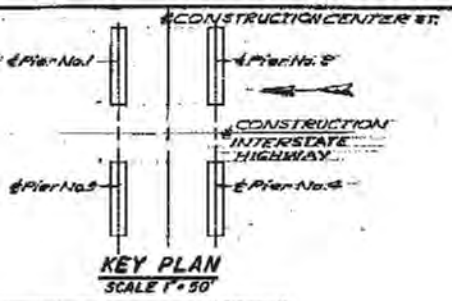


KEY PLAN
SCALE 1" = 50'

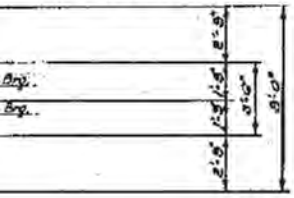

**FOR INFORMATION ONLY**

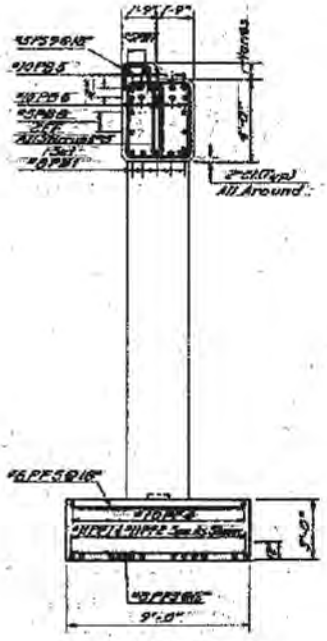


SECTION L-L
SCALE 1/4" = 1'-0"

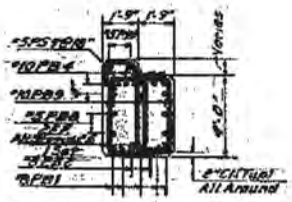


SECTION M-M
SCALE 1/4" = 1'-0"

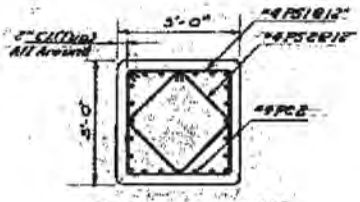


SECTION K-K (TYP)
SCALE: 1/2" = 1'-0"

| BEAM No. | ELEVATION PIER No. 3 | BEAM No. | ELEVATION PIER No. 4 |
|---|---|---|---|
| 10 | 4612.39 | 20 | 4612.18 |
| 11 | 4613.01 | 29 | 4611.97 |
| 12 | 4612.99 | 30 | 4611.56 |
| 13 | 4612.76 | 31 | 4611.76 |
| 14 | 4612.64 | 32 | 4611.97 |
| 15 | 4612.50 | 33 | 4611.48 |
| 16 | 4612.37 | 34 | 4611.32 |
| 17 | 4612.14 | 35 | 4611.18 |
| 18 | 4611.54 | 36 | 4611.03 |
| 28 | 4612.39 | 46 | 4612.08 |
| 29 | 4612.16 | 47 | [illegible] |
| 30 | 4612.72 | 48 | [illegible] |
| 31 | 4611.99 | 49 | [illegible] |
| 32 | 4611.86 | 50 | [illegible] |
| 33 | 4611.73 | 51 | [illegible] |
| 34 | 4611.60 | 52 | [illegible] |
| 35 | 4611.47 | 53 | [illegible] |
| 36 | 4611.34 | 54 | 4611.04 |

PIERS NO. 3 & 4

Rev. 7-21-60 BFR

DESIGN AND DRAWING BY
WESTERN ENGINEERS, INC. AND
EDWARDS AND KELCEY
CONSULTING ENGINEERS

SUBMITTED BY L. E. Denville
CHIEF ENGINEER
UTAH ENGR. LIC. NO. 2169

REGISTERED PROFESSIONAL ENGINEER
NO. 2169
L. E. DENVILLE
STATE OF UTAH

UTAH STATE ROAD COMMISSION
SALT LAKE CITY, UTAH
BRIDGE DEPARTMENT

OREM CENTER ST.
INTERCHANGE
138'-4" QTGO
STA 6364+78.94
LEHI-PROVO
I-15-4(9)265
UTAH COUNTY

F.G.
F.B.
J.E.K.

No. F-18

STRUCTURE 3-4

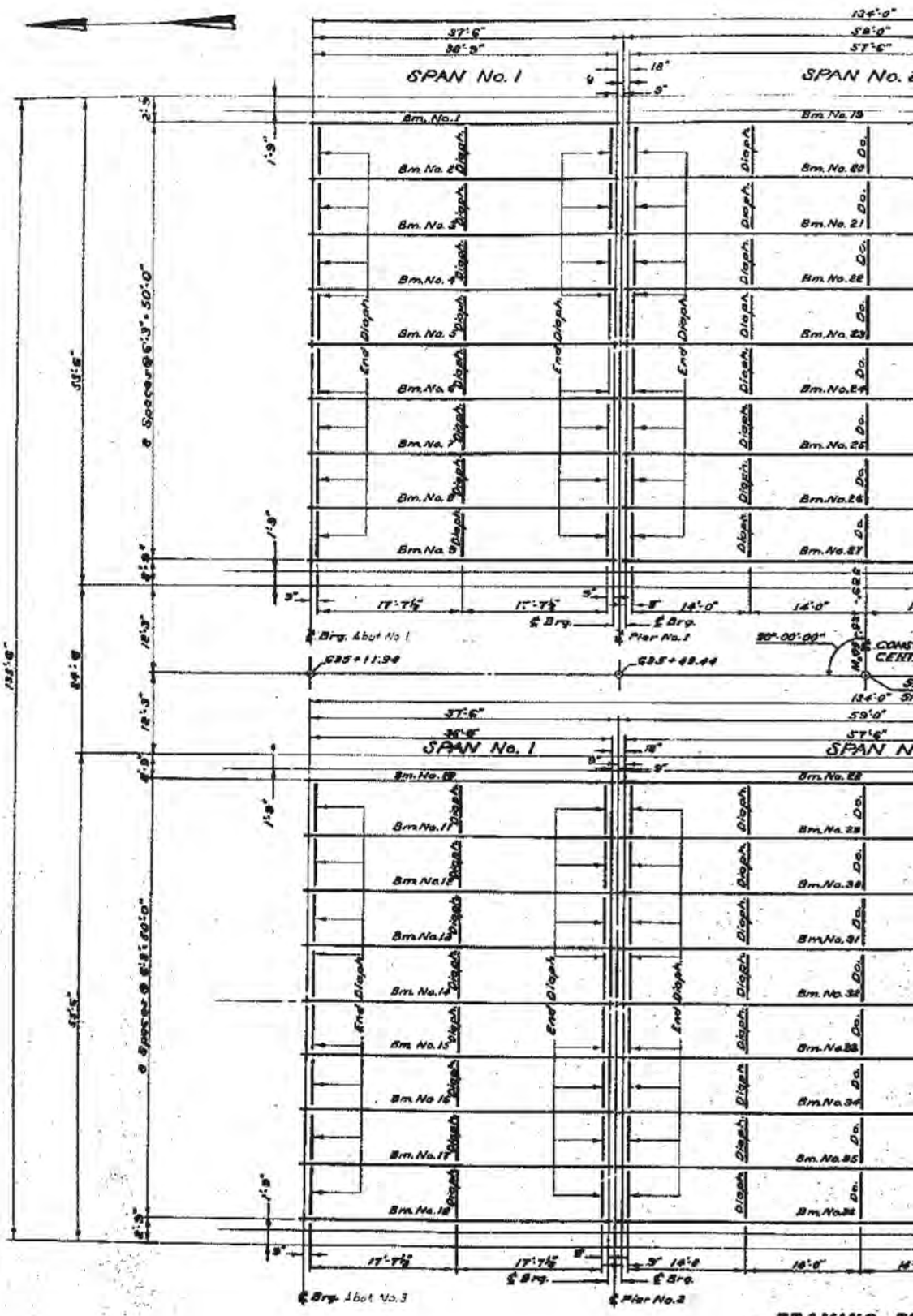


FRAMING PL

SCALE: 1/16" = 1'-0"

| FED. ROAD DIST. NO. | STATE | FED. AID PROJ. NO. | FISCAL YEAR | SHEET NO. | TOTAL SHEETS |
|---|---|---|---|---|---|
| UT | UTAH | I-15-6(19)265 | POST WAR | | |

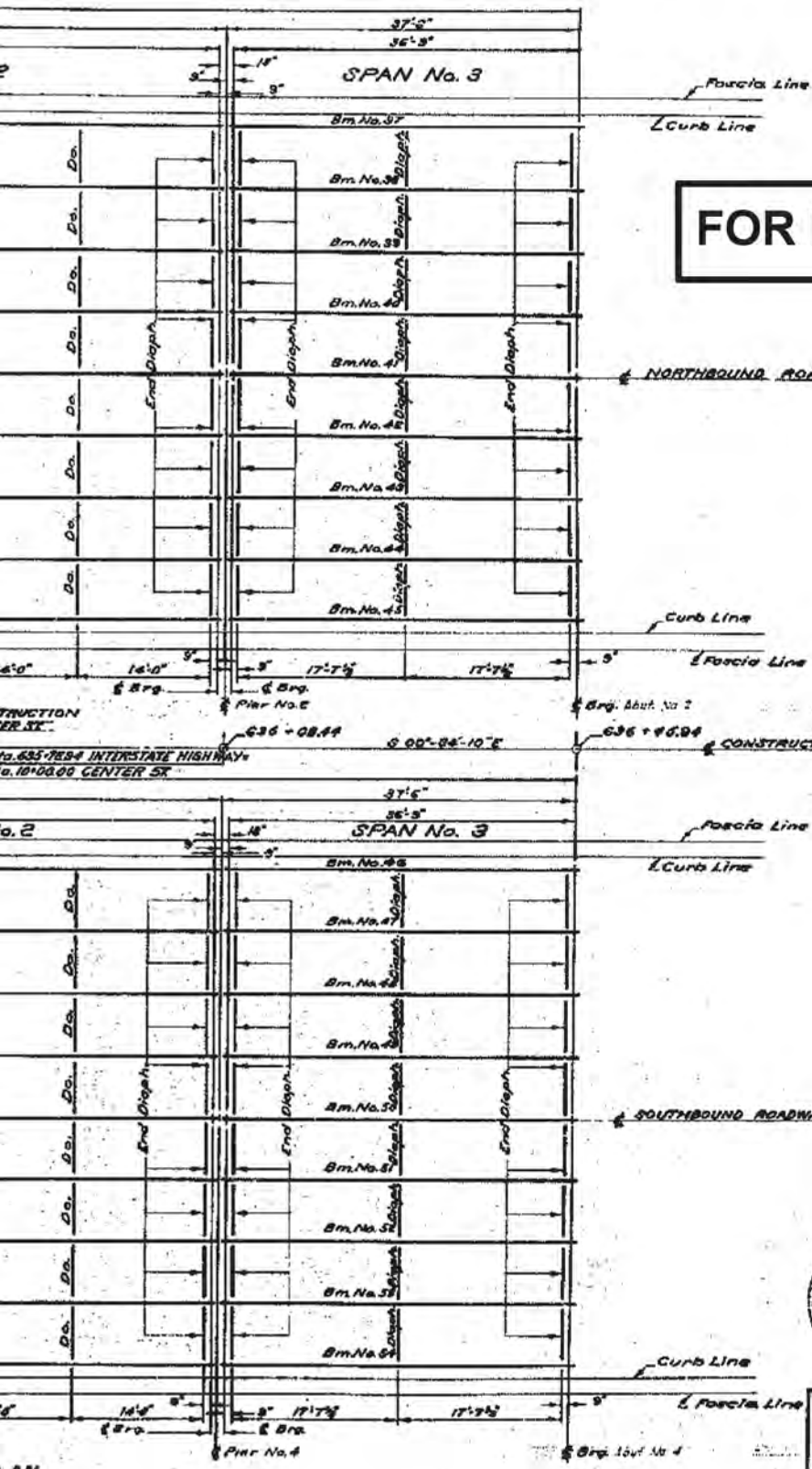


# FOR INFORMATION ONLY

NOTE: FOR DIAPHRAGM DETAILS SEE SHEET 12 OF 14 SHEET

REGISTERED PROFESSIONAL ENGINEER NO. 2104 J. R. KELCEY STATE OF UTAH

## FRAMING PLAN

Rev. 7-21-60 BFA

DESIGN AND DRAWING BY
WESTERN ENGINEERS, INC. AND
EDWARDS AND KELCEY
CONSULTING ENGINEERS

VERIFIED BY _____ CHIEF ENGINEER
UTAH ENGR. LIC. NO. _____

UTAH STATE ROAD COMMISSION
SALT LAKE CITY, UTAH
BRIDGE DEPARTMENT

SHEET 13 OF 14 SHEETS

OREM CENTER ST.
INTERCHANGE
158'-4" O. TO O.
STA. 635+78.94 I-15-6(19)265
LEHI-PROVO UTAH COUNTY

DESIGNED BY Y.G.
DRAWN BY F.R.
CHECKED BY _____
REVIEWED BY Y.G.
APPROVED BY _____
DATE _____
DATE _____
DWG. NO. F-15

STRUCTURE 34

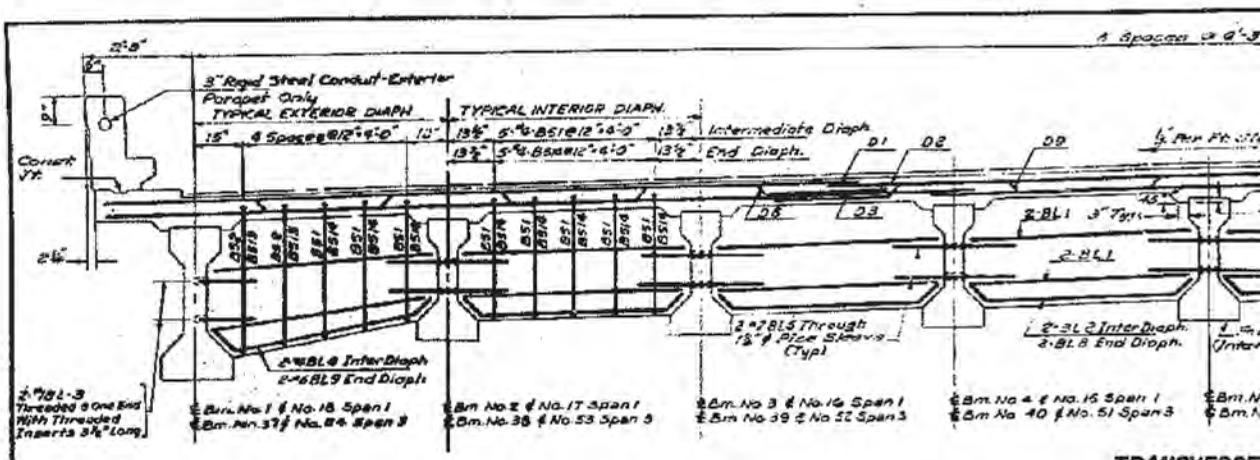


**TRANSVERSE**

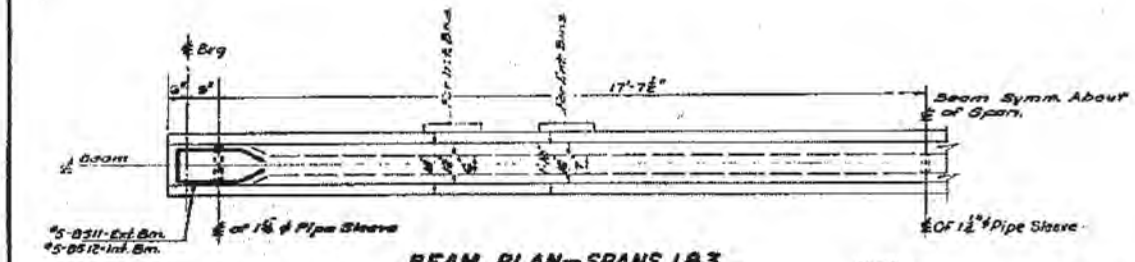


**BEAM PLAN—SPANS 1 & 3**

SCALE: ½" = 1'-0"

NOTE:
Use ¾" ϕ Threaded Inserts In Exterior Bms. - 3½" Long In Place Of Pipe Sleeves.

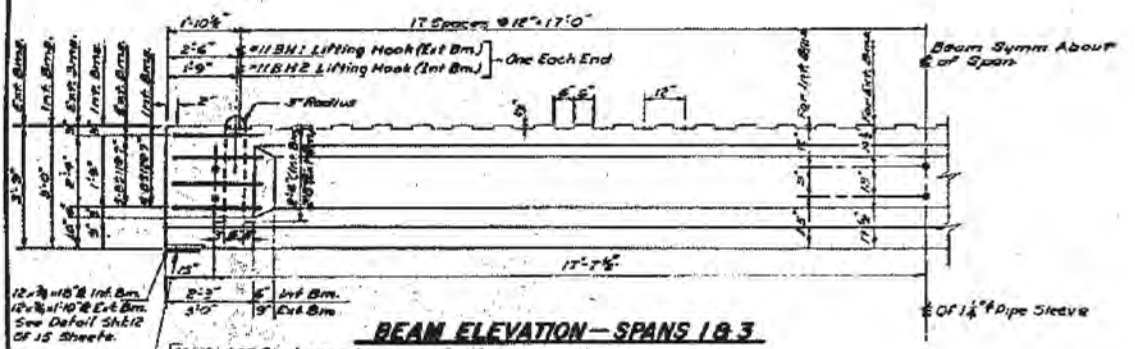


**BEAM ELEVATION—SPANS 1 & 3**

SCALE: ½" = 1'-0"

9" x 12" x 1/8" Elastomeric bearing pad at each end of each beam to be furnished by the beam fabricator. Payment for furnishing and placing shall be included in unit price bid per beam.

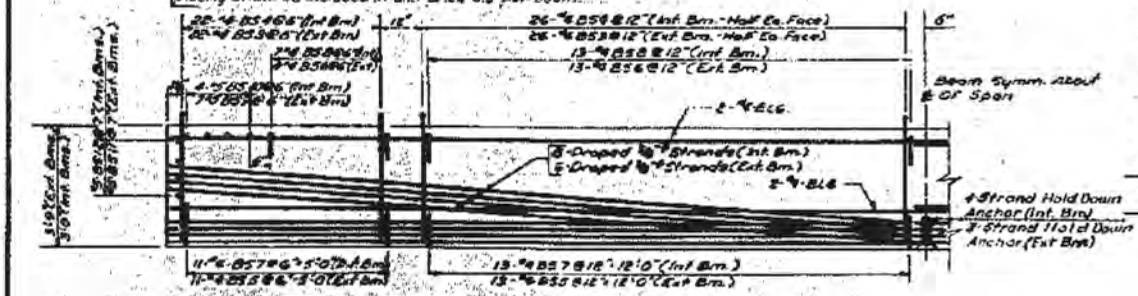


**BEAM REINFORCEMENT LAYOUT—SPANS 1 & 3**

SCALE: ½" = 1'-0"

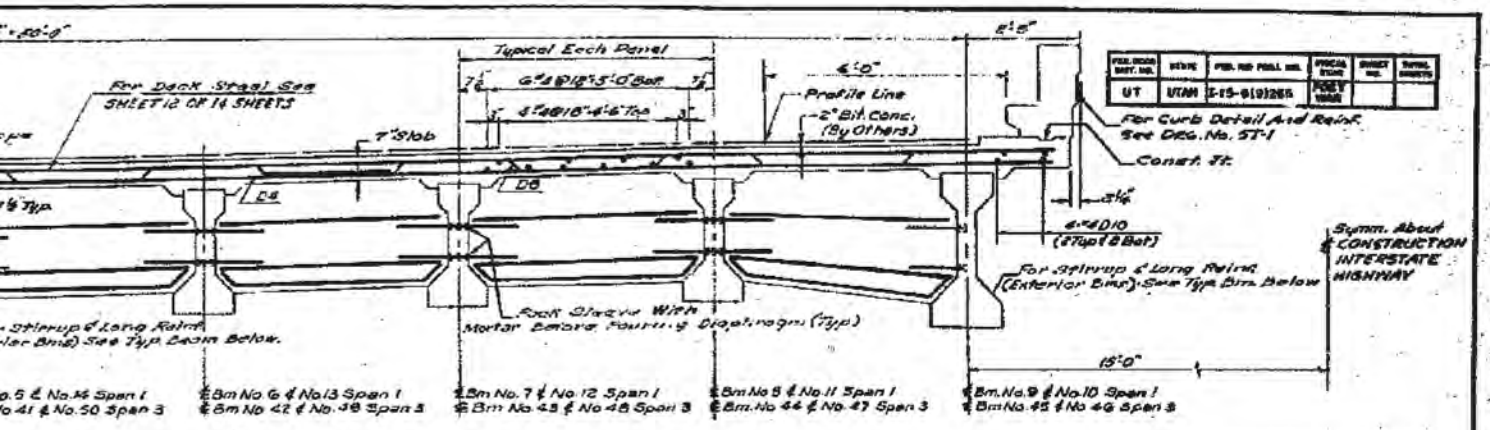


| FED. ROAD DIST. NO. | STATE | FED. AID PROJ. NO. | SPECIAL NOTE | SHEET NO. | TOTAL SHEETS |
|---|---|---|---|---|---|
| UT | UTAH | I-15-6(192)265 | FOR INFORMATION ONLY | | |

**FOR INFORMATION ONLY**

## SECTION - SPANS 1 & 3

SCALE: 1/2" = 1'-0"

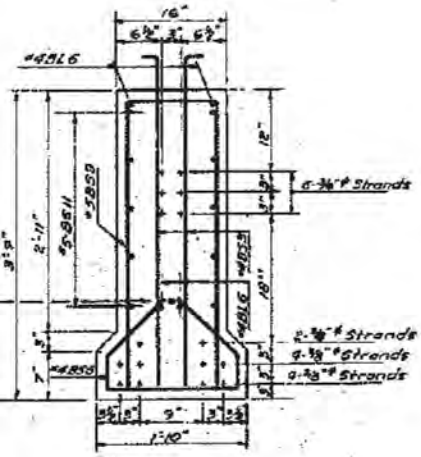


**TYPICAL EXTERIOR BEAM SECTION - AT ℄ BRG.**

SCALE: 1" = 1'-0"

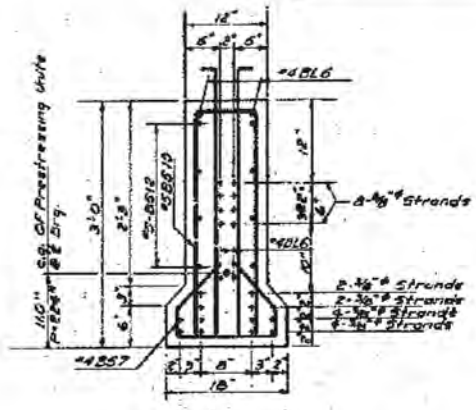


**TYPICAL INTERIOR BEAM SECTION - AT ℄ BRG.**

SCALE: 1" = 1'-0"

PRECAST PRESTRESSED BEAM DATA

ULTIMATE 28 DAY CYLINDER STRENGTH OF CONCRETE = 5000 P.S.I.

ULTIMATE CYLINDER STRENGTH OF CONCRETE AT TIME OF PRESTRESSING = 4000 P.S.I.

INITIAL TENSIONING PER 3/8"ϕ STRAND = 19,000 LBS

STRANDS SHALL BE BURNT OFF 1/2" INSIDE AT THE END OF BEAM AND MORTAR SHALL BE APPLIED TO COVER ENTIRE FACE OF END BLOCK

P = PRESTRESS FORCE AFTER LOSSES

REGISTERED PROFESSIONAL ENGINEER NO. 2164 J. R. NEWSILLE STATE OF UTAH

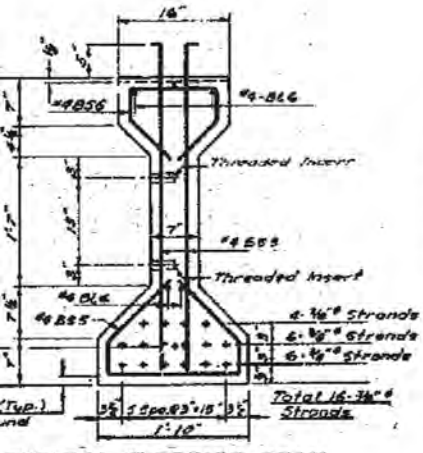


**TYPICAL EXTERIOR BEAM SECTION — SPANS 1 & 3**

SCALE: 1" = 1'-0"

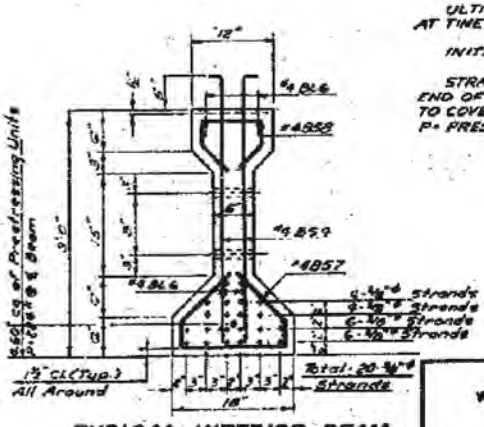


**TYPICAL INTERIOR BEAM SECTION — SPANS 1 & 3**

SCALE: 1" = 1'-0"

**TRANSVERSE SECTION**

SHEET 11 OF 14 SHEETS

Per 7-21-66 BRA

DESIGN AND DRAWING BY
WESTERN ENGINEERS, INC. AND
EDWARDS AND KELCEY
CONSULTING ENGINEERS

SUBMITTED BY J. R. Newsille CHIEF ENGINEER

UTAH ENGR. LIC. NO. 2164

UTAH STATE ROAD COMMISSION
SALT LAKE CITY, UTAH
BRIDGE DEPARTMENT

**OREM CENTER ST INTERCHANGE**
**136'-4" G.T.O.G.**

STA 635+78.94 LEHI-PROVO — I-15-6(192) UTAH COUNTY

DESIGNED BY Y.G. SCALE AS NOTED
DRAWN BY JK DATE July 27, 1966
TRACED BY Y.G. APPROVED D.L. Sorensen
CHECKED BY Y.G.

DWG. NO. F-15

STRUCTURE 3-0

**FOR INFORMATION ONLY**

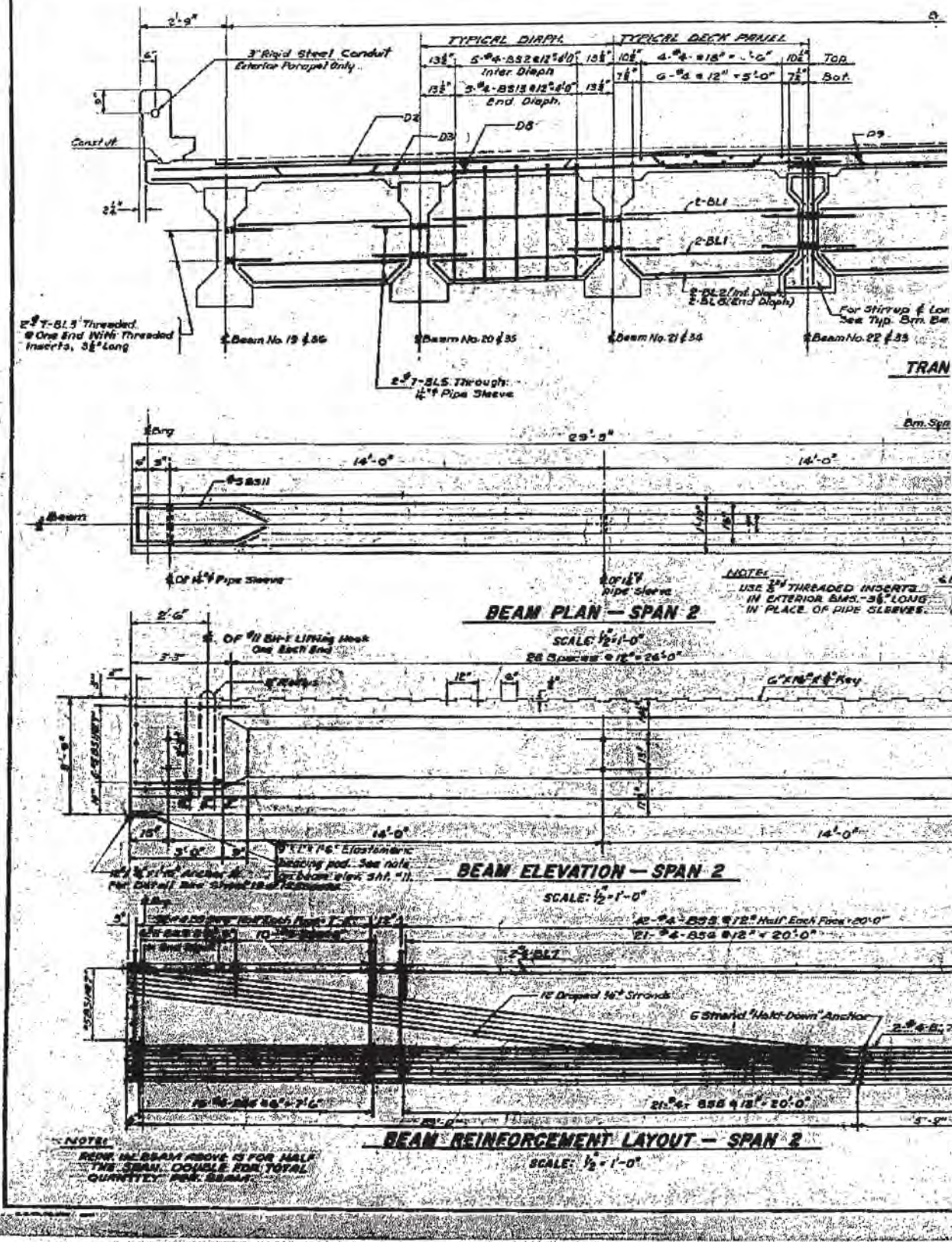


[redacted]

| FED. ROAD DIST. NO. | STATE | FED. AID PROJ. NO. | FISCAL YEAR | SHEET NO. | TOTAL SHEETS |
|---|---|---|---|---|---|
| 17 | UTAH | I-15-8(8)205 | 1967 | | |

Spaces @ 6'-3" = 50'-0"

For Slab Reinf. See Plan Below

Slope ¼" Per Ft.

7" Slab

D1

D4

D8

Profile Line

2" Bit. Conc. (By Others)

6'-0"

2'-9"

FOR CURB DETAIL & REINF. SEE DRG. NO. ST-1

Const. Jt.

Symmetrical About ℄ CONSTRUCTION INTERSTATE HIGHWAY

2-#4 D11 (D12) (Typ.) Top & Bot.

15'-0"

Deck Sheets With Mortar Before Pouring Diaphragm (Typ.)

℄ Beam No. 28 & 32

℄ Beam No. 24 & 31

℄ Beam No. 25 & 30

℄ Beam No. 26 & 29

℄ Beam No. 27 & 28

## TRANSVERSE SECTION – SPAN 2

SCALE: ½"=1'-0"

Deck Steel (See Plan)

## TYP. INT. DIAPHRAGM-SPAN 1,2&3
## END DIAPH. SIMILAR-EXCEPT AS NOTED

SCALE: 1"=1'-0"

## TYP. SEC. AT ℄ BRG. SPAN 2

SCALE: 1"=1'-0"

## TYP. BEAM SECTION – SPAN 2

SCALE: 1"=1'-0"

## DECK REINFORCING PLAN

SCALE: 1"=10'

## TRANSVERSE SECTION

PRECAST PRESTRESSED BEAM DATA

Ultimate 28 Day Cylinder Strength Of Conc. = 5000 psi

Ultimate Cylinder Strength At Time Of Prestressing = 4000 psi

Initial Tensioning Per ½" Strand = 18,000 lbs.

Strands Shall Be Burnt Off ¾" Inside: At The End Of The Beam And Mortar Shall Be Applied To Cover The Entire Face Of The End Block.

P = Prestress Force After Losses.

REV. 7-21-60 AFB
REV. 8-23-60 AHB

DESIGN AND DRAWING BY WESTERN ENGINEERS, INC. AND EDWARDS AND KELCEY CONSULTING ENGINEERS

UTAH REG. LIC. NO. 7160

OREM CENTER ST. INTERCHANGE
138'-4" Q TO Q
STA. 633+78.94
I-15-8(8)205
LEHI-PROVO
UTAH COUNTY

STRUCTURE NO. F-15

**FOR INFORMATION ONLY**

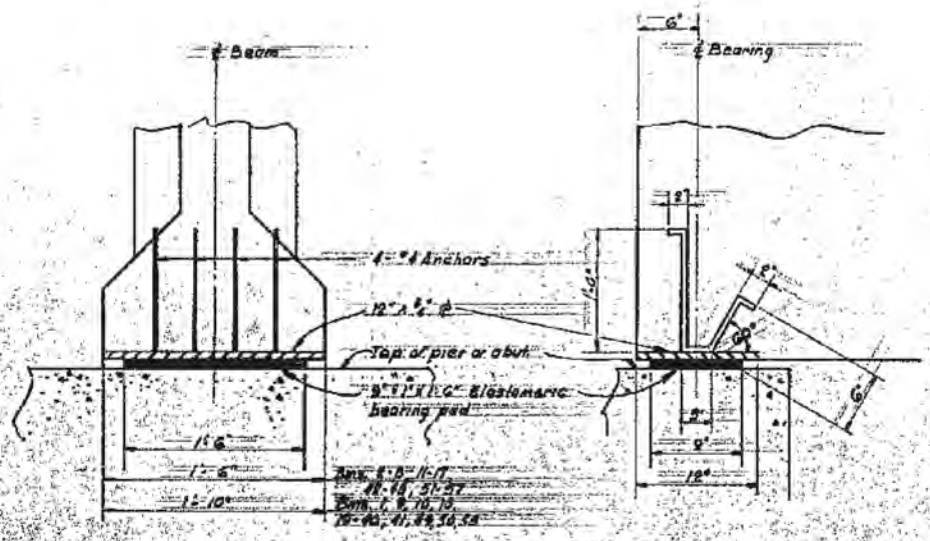


BEAM BEARING DETAILS

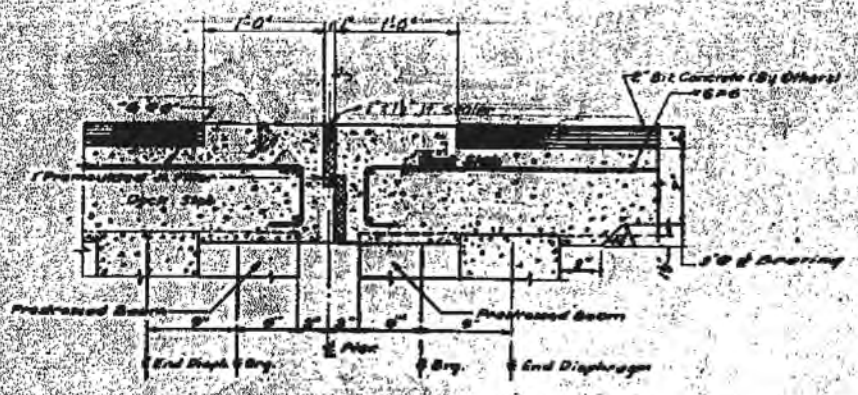


JOINT DETAIL AT PIER

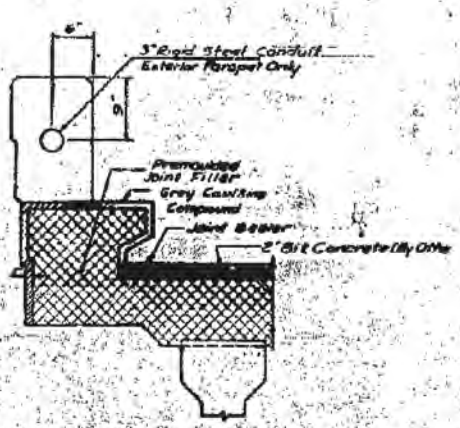


SECTION T-T

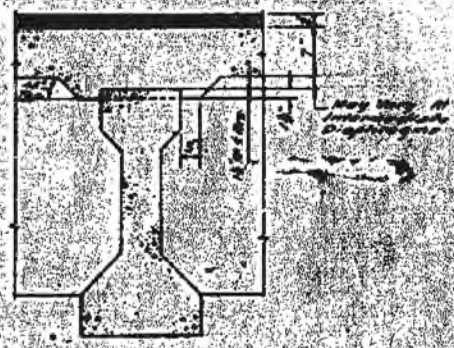

TYPICAL HAUNCH DETAIL

JOINT FILLER DETAILS AT PARAPETS

SCALE: ½"=1'-0"

CONCRETE DETAILS

Rev. 7-21-60 JFA

REGISTERED PROFESSIONAL ENGINEER
NO. 2164
E. R. NEWZILLE
STATE OF UTAH

DESIGNED AND DRAWN BY
WESTERN ENGINEERS, INC.
ENGINEERS AND SURVEYORS
OREM, UTAH

UTAH STATE ROAD COMMISSION
SALT LAKE CITY, UTAH
BRIDGE DEPARTMENT

OREM CENTER ST. INTERCHANGE
138'-4" O. TO O.
STA. 635+78.34
LEHI-PROVO
T.15.S. R.3.E. S.L.B.&M.
UTAH COUNTY

As Noted
July 27, 1960
D.L. Bayant

F-15

# BILL OF REINFORCING

| MARK | SIZE | LGTH. | NO. REQ. | TOTAL LENGTH | TYPE | A | B | C | D | E | F | G | H | J | K | O |
|---|---|---|---|---|---|---|---|---|---|---|---|---|---|---|---|---|
| | | | | ABUTMENT REINFORCEMENT | | | | | | | | | | | | |
| AD 1 | 5 | 3'-0" | 112 | 336'-0" | 1 | | | | | | | | | | | |
| 2 | 6 | 4'-0" | 200 | 800'-0" | 4 | | 8'-0" | 8'-0" | | | | | | | | |
| 3 | 5 | 5'-3" | 142 | 745'-6" | 4 | | 12" | 9'-3" | | | | | | | | |
| 4 | 7 | 8'-0" | 72 | 576'-0" | 4 | | 12" | 7'-0" | | | | | | | | |
| 5 | 7 | 9'-9" | 72 | 702'-0" | 4 | | 12" | 8'-9" | | | | | | | | |
| AF 1 | 5 | 6'-3" | 272 | 1700'-0" | 1 | + 112 x 6'-3" x 1.043 = 730.10 lbs. | | | | | | | | | | |
| 2 | 5 | 18'-6" | 80 | 1480'-0" | 1 | | | | | | | | | | | |
| 3 | 5 | 30'-0" | 80 | 2400'-0" | 1 | | | | | | | | | | | |
| 4 | 5 | 8'-0" | 16 | 64'-0" | 1 | | | | | | | | | | | |
| AS 1 | 5 | 3'-3" | 4 | 13'-0" | 1 | | | | | | | | | | | |
| 2 | | 5'-0" | 171 | 855'-0" | | + 428 x 5'-0" x 1.043 = 255.55 lbs. | | | | | | | | | | |
| 3 | | 5'-3" | 19 | 99'-9" | | | | | | | | | | | | |
| 4 | | 5'-6" | 4 | 22'-0" | | | | | | | | | | | | |
| 5 | | 4'-3" | 15 | 63'-9" | | | | | | | | | | | | |
| 6 | | 6'-3" | 19 | 118'-9" | | | | | | | | | | | | |
| 7 | | 4'-0" | 15 | 77'-3" | | | | | | | | | | | | |
| 8 | | 4'-6" | 19 | 85'-6" | | | | | | | | | | | | |
| 9 | | 6'-9" | 15 | 101'-3" | | | | | | | | | | | | |
| 10 | | 5'-9" | 15 | 86'-3" | | | | | | | | | | | | |
| 11 | | 3'-9" | 4 | 15'-0" | | | | | | | | | | | | |
| 12 | | 4'-0" | 4 | 16'-0" | | | | | | | | | | | | |
| 13 | | 30'-6" | 26 | 793'-0" | | | | | | | | | | | | |
| 14 | 5 | 24'-0" | 26 | 624'-0" | | | | | | | | | | | | |
| 15 | 6 | 24'-9" | 12 | 297'-0" | | | | | | | | | | | | |
| 16 | 6 | 18'-3" | 12 | 219'-0" | | | | | | | | | | | | |
| 17 | 6 | 6'-3" | 24 | 150'-0" | | | | | | | | | | | | |
| 18 | 5 | 8'-6" | 18 | 153'-0" | | | | | | | | | | | | |
| 19 | | 7'-3" | 18 | 130'-6" | | | | | | | | | | | | |
| 20 | | 9'-6" | 18 | 171'-0" | | | | | | | | | | | | |
| 21 | | 9'-0" | 18 | 162'-0" | | | | | | | | | | | | |
| 22 | | 8'-0" | 18 | 144'-0" | | | | | | | | | | | | |
| 23 | | 7'-9" | 18 | 139'-6" | | | | | | | | | | | | |
| 24 | | 10'-0" | 18 | 180'-0" | | | | | | | | | | | | |
| 25 | | 8'-9" | 18 | 157'-6" | 1 | | | | | | | | | | | |
| 26 | | 32'-0" | 18 | 576'-0" | 4 | | 18" | 28'-6" | | | | | | | | |
| 27 | | 33'-3" | 18 | 600'-6" | 1 | | | | | | | | | | | |
| 28 | | 25'-6" | 18 | 306'-0" | 4 | | 18" | 24'-0" | | | | | | | | |
| 29 | | 22'-6" | 18 | 225'-0" | 1 | | | | | | | | | | | |
| 30 | 5 | 4'-0" | 220 | 880'-0" | 4 | | 2'-0" | 2'-0" | | | | | | | | |
| | | | | WINGWALL REINFORCEMENT | | | | | | | | | | | | |
| AW 1 | 6 | 18'-6" | 36 | 594'-0" | 1 | | | | | | | | | | | |
| 2 | | 18'-6" | 36 | 450'-0" | 1 | | | | | | | | | | | |
| 3 | | 17'-0" | 8 | 136'-0" | 1 | | | | | | | | | | | |
| 4 | | 19'-6" | 8 | 156'-0" | 1 | | | | | | | | | | | |
| 5 | | 20'-6" | 8 | 164'-0" | 1 | | | | | | | | | | | |
| 6 | | 18'-6" | 8 | 148'-0" | 4 | | 18" | 28'-6" | | | | | | | | |
| 7 | | 21'-0" | 8 | 168'-0" | 4 | | 18" | 19'-6" | | | | | | | | |
| 8 | | 22'-0" | 8 | 176'-0" | 4 | | 18" | 17'-0" | | | | | | | | |
| 9 | | 3'-3" | 16 | 52'-0" | 1 | | | | | | | | | | | |
| 10 | | 4'-0" | 16 | 64'-0" | 1 | | | | | | | | | | | |
| 11 | | 5'-0" | 16 | 80'-0" | 1 | | | | | | | | | | | |
| 12 | | 8'-3" | 16 | 132'-0" | 1 | | | | | | | | | | | |
| 13 | | 11'-0" | 18 | 198'-0" | 1 | | | | | | | | | | | |
| 14 | | 4'-3" | 18 | 76'-6" | 1 | | | | | | | | | | | |
| 15 | | 9'-3" | 18 | 166'-6" | 1 | | | | | | | | | | | |
| 16 | 5 | 5'-0" | 36 | 180'-0" | 1 | | | | | | | | | | | |

| MARK | SIZE | LGTH. | NO. REQ. | TOTAL LENGTH | TYPE | A | B | C | D | E |
|---|---|---|---|---|---|---|---|---|---|---|
| | | | | PIER REINFORCEMENT | | | | | | |
| PB 1 | 8 | 19'-6" | 40 | 780'-0" | 1 | | | | | |
| 2 | 8 | 10'-3" | 16 | 164'-0" | 1 | | | | | |
| 3 | 8 | 12'-9" | 40 | 510'-0" | 22 | 1'-0" | 2'-0" | 6'-9" | 3'-0" | |
| 4 | 10 | 21'-9" | 20 | 435'-0" | 1 | | | | | |
| 5 | 10 | 19'-0" | 40 | 760'-0" | 1 | | | | | |
| 6 | 10 | 14'-0" | 40 | 560'-0" | 1 | | | | | |
| 7 | 5 | 22'-6" | 16 | 360'-0" | 1 | | | | | |
| 8 | 5 | 27'-3" | 32 | 872'-0" | 1 | | | | | |
| 9 | 10 | 12'-0" | 12 | 144'-0" | 1 | | | | | |
| PC 1 | 9 | 19'-0" | 144 | 2736'-0" | 1 | | | | | |
| PC 2 | 9 | 22'-0" | 144 | 3168'-0" | 1 | | | | | |
| PD 1 | 9 | 7'-3" | 288 | 2088'-0" | 4 | | 12" | 6'-3" | | |
| PF 1 | 11 | 32'-9" | 64 | 2096'-0" | 1 | | | | | |
| 2 | 11 | 14'-0" | 64 | 896'-0" | 1 | | | | | |
| 3 | 8 | 8'-6" | 168 | 1428'-0" | 1 | | | | | |
| 4 | 10 | 25'-0" | 60 | 1500'-0" | 1 | | | | | |
| PF 5 | 8 | 8'-6" | 120 | 1020'-0" | 1 | | | | | |
| PS 1 | 4 | 11'-6" | 198 | 2208'-0" | 18 | 0'-5" | 2'-8" | 2'-8" | 2'-8" | 2'-8" |
| 2 | 4 | 8'-6" | 198 | 1632'-0" | | 0'-6" | 1'-11" | 1'-11" | 1'-11" | 1'-11" |
| 3 | 5 | 11'-1" | 240 | 2660'-0" | | 0'-5" | 1'-8" | 3'-8" | 1'-8" | 3'-8" |
| 4 | | 10'-9" | 12 | 129'-0" | | 0'-5" | 1'-8" | 3'-6" | 1'-8" | 3'-6" |
| 5 | | 10'-3" | 12 | 123'-0" | | 0'-5" | 1'-8" | 3'-3" | 1'-8" | 3'-3" |
| 6 | | 9'-9" | 12 | 117'-0" | | 0'-5" | 1'-8" | 3'-0" | 1'-8" | 3'-0" |
| 7 | | 9'-3" | 12 | 111'-0" | | 0'-5" | 1'-8" | 2'-9" | 1'-8" | 2'-9" |
| 8 | | 8'-9" | 12 | 105'-0" | 18 | 0'-5" | 1'-8" | 2'-6" | 1'-8" | 2'-6" |
| 9 | 6 | 4'-0" | 120 | 570'-0" | 21 | | 1'-8" | 1'-5" | 1'-8" | |
| | | | | DECK SLAB REINFORCEMENT | | | | | | |
| D 1 | 5 | 37'-8" | 184 | 6934'-0" | 1 | | | | | |
| 2 | 5 | 18'-6" | 184 | 3404'-0" | 1 | | | | | |
| 3 | 5 | 21'-9" | 184 | 4008'-0" | 1 | | | | | |
| 4 | 5 | 33'-5" | 184 | 6152'-0" | 1 | | | | | |
| 5 | 4 | 4'-0" | 1260 | 5040'-0" | 23 | 4" | 5" | 3'-8" | | |
| 6 | 4 | 37'-3" | 24 | 894'-0" | 1 | | | | | |
| 7 | 4 | 18'-8" | 24 | 448'-0" | 1 | | | | | |
| 8 | 6 | 21'-8" | 364 | 7,795'-8" | 28 | | 4'-6" | 0'-7" | 3'-0" | 2'-5" |
| 9 | 6 | 32'-3" | 188 | 6110'-6" | 29 | | | 0'-7" | 3'-0" | 2'-5" |
| 10 | 4 | 38'-6" | 368 | 14,028'-0" | 1 | | | | | |
| 11 | 4 | 36'-3" | 176 | 6380'-0" | 1 | | | | | |
| D 12 | 4 | 23'-3" | 176 | 4092'-0" | 1 | | | | | |
| | | | | APPROACH SLAB REINFORCEMENT | | | | | | |
| S 1 | 5 | 30'-0" | 120 | 3600'-0" | 1 | | | | | |
| 2 | 5 | 24'-0" | 120 | 2880'-0" | 1 | | | | | |
| 3 | 7 | 14'-6" | 216 | 3132'-0" | 1 | | | | | |
| S 4 | 5 | 14'-6" | 216 | 3132'-0" | 1 | | | | | |
| | | | | CURB & PARAPET REINFORCEMENT | | | | | | |
| DC 1 | 5 | 8'-10" | 432 | 3672'-6" | 24 | 8" | 2'-10" | 2'-7" | 12" | 12" |
| 2 | 5 | 3'-1" | 604 | 1868'-3" | 80 | 1'-6" | 1'-6" | | | |
| 3 | 5 | 6'-10" | 168 | 1157'-5" | 36 | | 2'-10" | 8" | 3'-6" | |
| 4 | 4 | 19'-6" | 72 | 1404'-0" | 1 | | | | | |
| 5 | 4 | 19'-8" | 112 | 2213'-0" | 1 | | | | | |
| 6 | 4 | 20'-6" | 88 | 1763'-0" | 1 | | | | | |

FOR INFOR

| FED. ROAD DIST. NO. | STATE | FED. AID ROAD NO. | PROJ. YEAR | SHEET NO. | TOTAL SHEETS |
|---|---|---|---|---|---|
| UT | UTAH | I-15-6 (9)268 | POST NEXT | | |

## STEEL

| MARK | SIZE | LGTH. | NO. REQ. | TOTAL LENGTH | TYPE | A | B | C | D | E | F | G | H | J | K | O |
|---|---|---|---|---|---|---|---|---|---|---|---|---|---|---|---|---|
| PRESTRESSED CONCRETE BEAM REINFORCEMENT | | | | | | | | | | | | | | | | |
| *BH 1 | 11 | 6'-8" | 58 | 386'-8" | 29 | 0'-3" | 2'-8" | 2'-8" | 0'-3" | 0'-3" | | | | | | |
| *BH 2 | 11 | 6'-0" | 56 | 336'-0" | 29 | 0'-3" | 2'-4" | 2'-4" | 0'-3" | 0'-3" | | | | | | |
| | | | | | | | | | | | | | | | | |
| BL 1 | 6 | 5'-0" | 704 | 3,520'-0" | 1 | | | | | | | | | | | |
| 2 | 4 | 5'-9" | 144 | 828'-0" | 30 | 0'-7½" | 4'-6" | 0'-7½" | | | | | | | | |
| 3 | 7 | 1'-6" | 88 | 132'-0" | 27 | 0'-3½" | 1'-0½" | | | | | | | | | |
| 4 | 4 | 5'-10" | 16 | 93'-8" | 30 | 0'-7½" | 4'-7" | 0'-7½" | | | | | | | | |
| 5 | 7 | 3'-0" | 308 | 924'-0" | 1 | | | | | | | | | | | |
| * 6 | 4 | 10'-0" | 828 | 8,280'-0" | 1 | | | | | | | | | | | |
| * 7 | 4 | 80'-0" | 144 | 11,520'-0" | 1 | | | | | | | | | | | |
| 8 | 6 | 5'-9" | 160 | 920'-0" | 30 | 0'-7½" | 4'-6" | 0'-7½" | | | | | | | | |
| 9 | 6 | 5'-10" | 32 | 186'-8" | 30 | 0'-7½" | 4'-7" | 0'-7½" | | | | | | | | |
| | | | | | | | | | | | | | | | | |
| BS 1 | 4 | 6'-9" | 160 | 1,080'-0" | 13 | | 0'-3" | 3'-11" | 0'-5" | 3'-11" | 0'-3" | | | | | |
| 2 | | 7'-11" | 240 | 1,900'-0" | 13 | | 0'-3" | 3'-8" | 0'-5" | 3'-8" | 0'-3" | | | | | |
| * 3 | | 4'-3" | 2100 | 8,925'-0" | 4 | | 0'-3" | 4'-0" | + 1356 x 4'-3" = 2,663 = 3849.68 lbs. | | | | | | | |
| * 4 | | 3'-6" | 2652 | 9,282'-0" | 4 | | 0'-3" | 3'-3" | | | | | | | | |
| * 5 | | 4'-6" | 1716 | 7,722'-0" | 31 | 0'-5½" | 1'-7" | 0'-5½" | 1'-0" | 1'-0" | | | | | | |
| * 6 | | 3'-6" | 1988 | 6,958'-0" | 31 | 0'-5½" | 1'-1" | 0'-5½" | 0'-9" | 0'-9" | | | | | | |
| * 7 | | 3'-6" | 1944 | 6,804'-0" | 31 | 0'-4½" | 1'-3" | 0'-4½" | 0'-8" | 0'-8" | | | | | | |
| * 8 | 4 | 2'-6" | 1180 | 2,950'-0" | 31 | 0'-4½" | 0'-9" | 0'-4½" | 0'-6" | 0'-6" | | | | | | |
| * 9 | 5 | 8'-1" | 328 | 2,651'-4" | 21 | | | 3'-6" | 1'-7" | 3'-6" | | | | | | |
| * 10 | 5 | 6'-3" | 224 | 1,400'-0" | 21 | | | 2'-9" | 0'-9" | 2'-9" | | | | | | |
| * 11 | 5 | 8'-9" | 260 | 2,275'-0" | 31 | 2'-10" | 1'-1" | 2'-10" | 1'-0" | 1'-0" | | | | | | |
| * 12 | 5 | 5'-9" | 224 | 1,288'-0" | 31 | 2'-1" | 1'-1" | 2'-1" | 0'-9" | 0'-9" | | | | | | |
| 13 | 4 | 6'-1" | 192 | 1,152'-0" | 13 | | 0'-3" | 3'-6" | 0'-7" | 3'-6" | 0'-3" | | | | | |
| 14 | 4 | 6'-11" | 288 | 1,992'-0" | 13 | | 0'-3" | 3'-11" | 0'-7" | 3'-11" | 0'-3" | | | | | |
| * 15 | 4 | 2'-1" | 432 | 900'-0" | 24 | 0'-5" | 1'-0" | 0'-5" | 0'-6" | 0'-6" | | | | | | |
| | | | | | | | | | | | | | | | | |
| 4 x 10'-9" | | = 1.043 | = | 44.85 lbs. | | | | | | | | | | | | |
| 4 x 10'-2" | | = 1.043 | = | 42.76 lbs. | | | | | | | | | | | | |
| 4 x 9'-5" | | = 1.043 | = | 40.68 lbs. | | | | | | | | | | | | |
| 4 x 9'-2" | | = 1.043 | = | 38.59 lbs. | | | | | | | | | | | | |
| 4 x 8'-5" | | = 1.043 | = | 36.51 lbs. | | | | | | | | | | | | |

* REINFORCING NOT INCLUDED IN ESTIMATE - TO BE FURNISHED BY BEAM FABRICATOR.

| | | | | | | | | | |
|---|---|---|---|---|---|---|---|---|---|
| | | | | | | | | 207,038.00 | |
| 40,647'-4" | OF | #4 Bars | @ | .668 | # | PT. = | 27,159.19 lbs | 720.10 lbs | |
| 37,955'-0" | OF | #5 | " | @ 1.043 | = | " = | 60,447.20 | 2,66.55 | " |
| 28,426'-10" | " | #6 | " | @ 1.502 | = | " = | 42,669.26 | 28,171.10 44.65 | " |
| 6,916'-0" | " | #7 | " | @ 2.044 | = | " = | 14,136.50 | 42.76 | " |
| 2,888'-0" | " | #8 | " | @ 2.670 | = | " = | 7,644.96 | 40.68 | " |
| 7,992'-0" | " | #9 | " | @ 3.400 | = | " = | 27,172.80 | 38.59 | " |
| 5,544'-0" | " | #10 | " | @ 4.303 | = | " = | 16,387.10 | 36.51 | " |
| 3,192'-0" | " | #11 | " | @ 5.313 | = | " = | 12,996.65 | Total = 208,227.04 | " |

TOTAL - ~~207,038~~ lbs.
~~207,038~~ Change Order No. 1
208,227.04 lbs.

Total Pay Quant
R.J.S. 227
8-8-60
R.L.O. 77

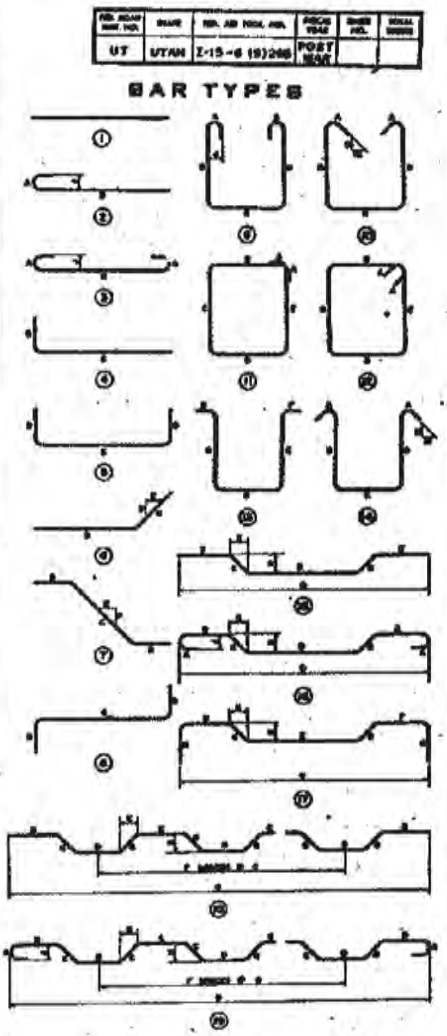


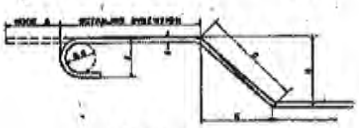

HOOK DETAIL

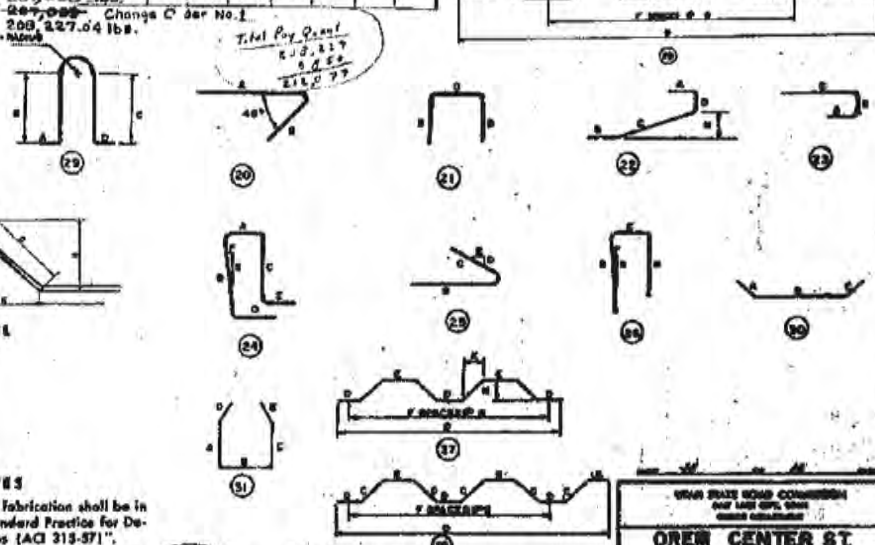

### GENERAL NOTES

1. All placing drawings, detailing, and fabrication shall be in accordance with the "Manual of Standard Practice for Detailing Reinforced Concrete Structures (ACI 315-57)".
2. All dimensions shown for bar bending details are out-to-out of bars.

Rev 7-21-60 DFA
Rev 8-23-60 RJS

REGISTERED PROFESSIONAL ENGINEER NO. 2164 J. R. NEWALL STATE OF UTAH

DESIGN AND DRAWING BY
WESTERN ENGINEERS, INC. AND
EDWARDS AND KELCEY
CONSULTING ENGINEERS

SUBMITTED BY J. R. Newall
CHIEF ENGINEER
UTAH REGIS. NO. 2164

UTAH STATE ROAD COMMISSION
CHIEF ENGINEER

OREM CENTER ST. INTERCHANGE
159'-4" O.TO O.
STA. 638+78.94 I-15-6 (9)268
LEHI-PROVO UTAH COUNTY

DESIGNED H.R.N.
DRAWN B.A.
TRACED BY
CHECKED BY R.V.
APPROVED A.T. Bergstrom

NO. F-15

STRUCTURE 3-8

RMATION ONLY

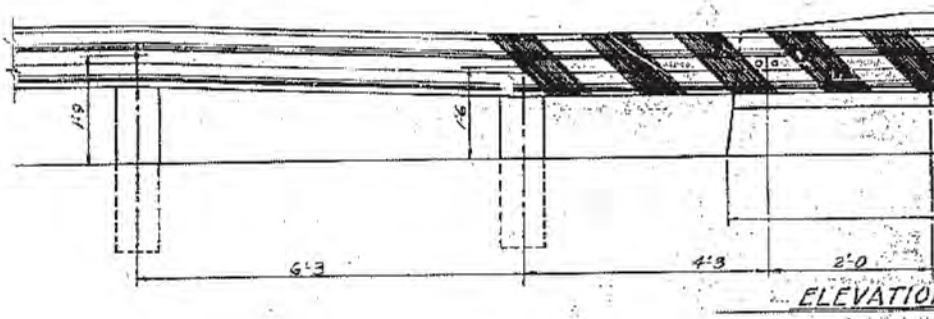


ELEVATIO

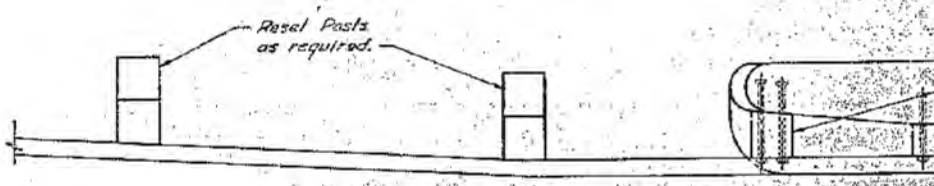


PLAN

Approach E

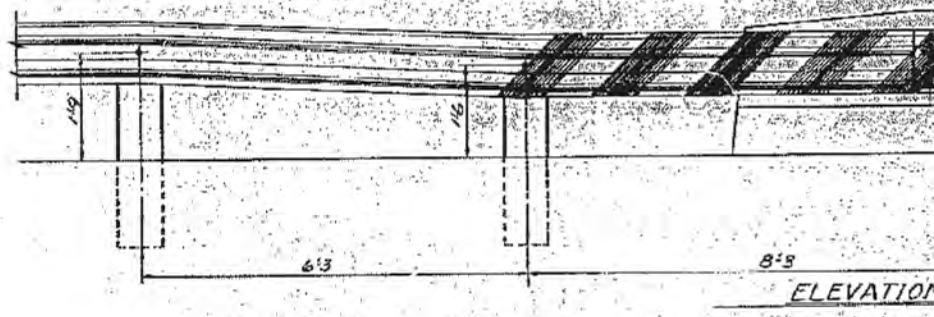


ELEVATION

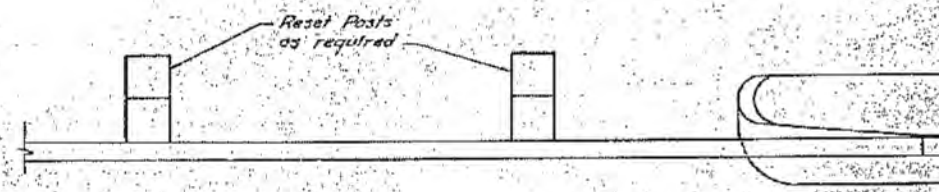


PLAN

Exit End

DGN Files IP PWPdms\16721\4433.E-15-14b.forinfoudon
02-MAY-2005

**FOR INFORMATION ONLY**

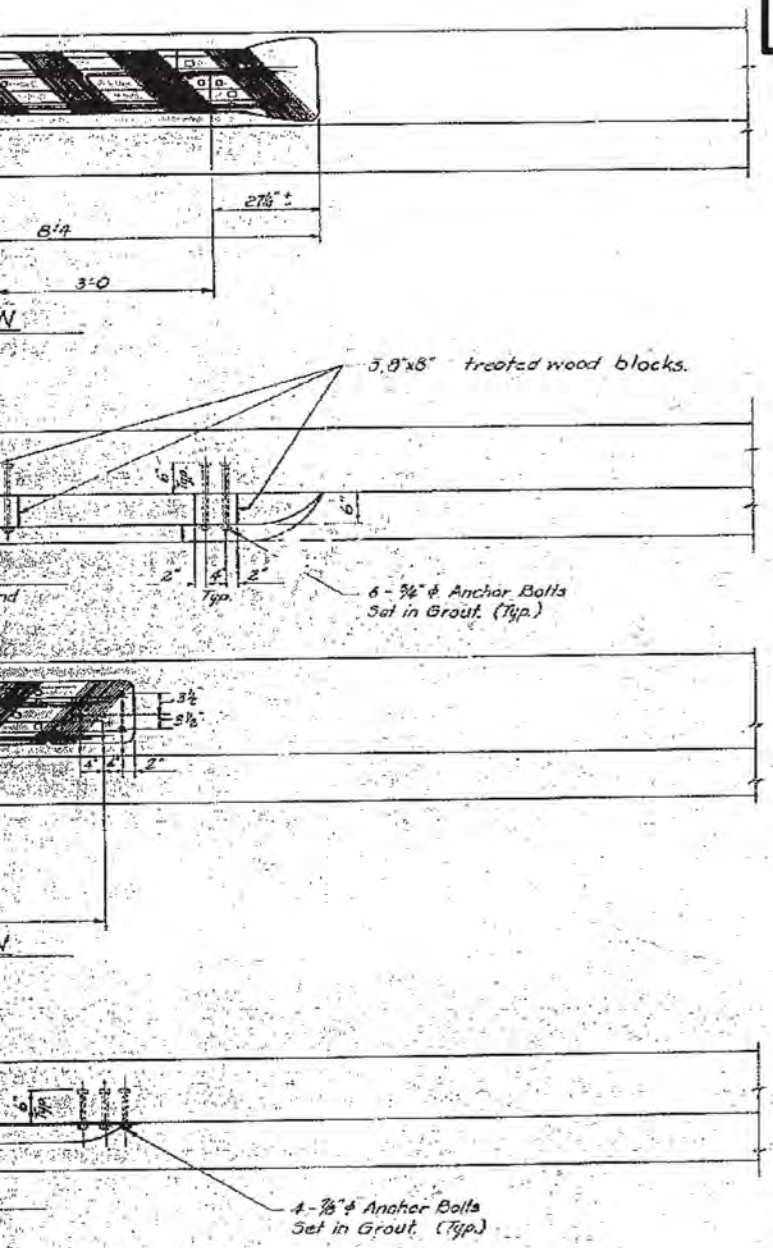


1. Stripes shall be alternate black and white 6" wide at an angle of 45°. The 6" stripes shall be reflectorized and slope downward in the direction of traffic.
2. All anchor bolts shall be ¾" ϕ bolts. ASTM A307.
3. All bolts shall be galvanized in accordance with A.S.T.M. A153-65.
4. For post and rail details see std. dwgs no. 735-1 & 735-5.
5. Drilling holes, placing, and grouting of bolts is included in structural steel.

| | | | |
|---|---|---|---|
| UTAH STATE DEPARTMENT OF HIGHWAYS<br>SALT LAKE CITY, UTAH<br>STRUCTURES DIVISION | | | |
| OREM - CENTER ST. INTERCHANGE<br>I-15 OVER CENTER ST.<br>GUARDRAIL ATTACHMENT | | | |
| DESIGN C.D.C. 7-22-69 | CHECK | | I-15-6(66)264 PROJECT NUMBER |
| DRAWN Wm B. 7-29-69 | CHECK C.D.C. 7-29-69 | | |
| SUBM. Wm B. 7-29-69 | CHECK C.D.C. 7-29-69 | | 635+78.94 STATION |
| APPROVAL RECOMM. 7-29-69 DATE | Charles D. Clay DIRECTOR OF HIGHWAYS | | UTAH COUNTY |
| APPROVED 7-30-69 DATE | Ray Lindsay DIRECTOR, STRUCTURAL DIVISION | | |
| NO. / BY / DATE / REMARKS<br>REVISIONS | | DWG NO. F-15W | 14 Box 14 |

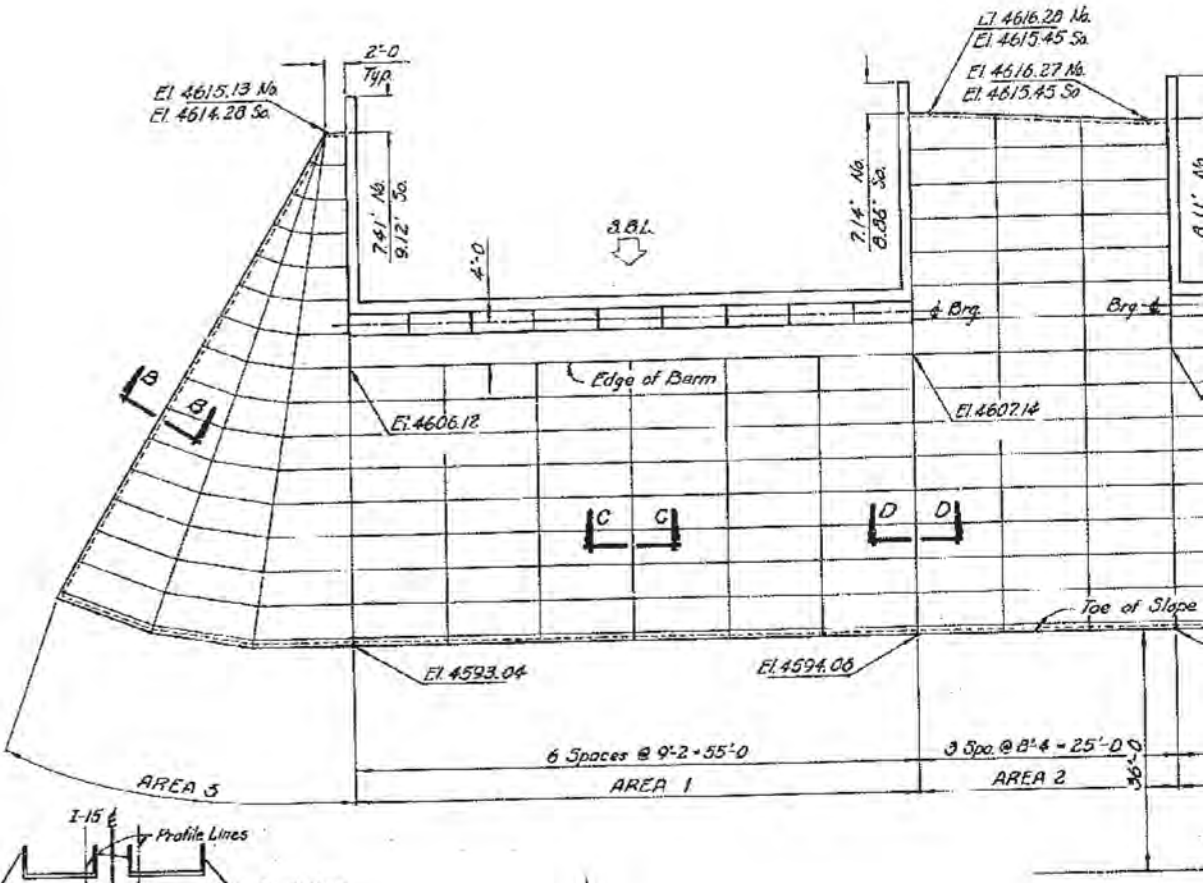


PLAN VIEW - NORTH SLOPE

South slope protection similar

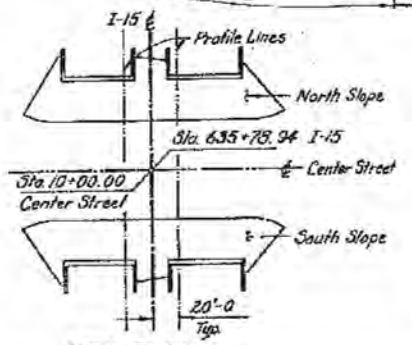


KEY PLAN

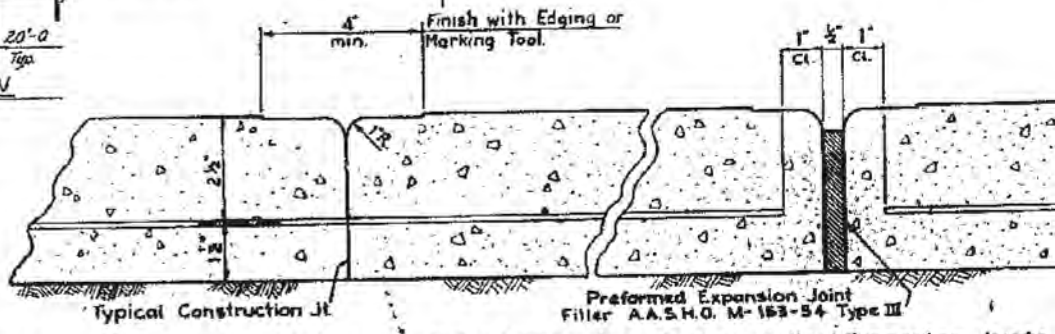


Locate Construction Joints as needed in placing slab. Locate vertical Expansion Joints

SECTION C-C

SECTION D-D

DGN Files JP. Pwjobs\16721\4433.F-15-14c.\genrinfocon
02-MAY-2005

**FOR INFORMATION ONLY**

| CONCRETE SLOPE PRO | | | |
|---|---|---|---|
| Location | Area 1 | Area 2 | Area 3 |
| Rev. Slope | 3646 | 1275 | 165 |
| | | | |
| Rev. Slope | 3646 | 1227 | 142 |
| | | | |

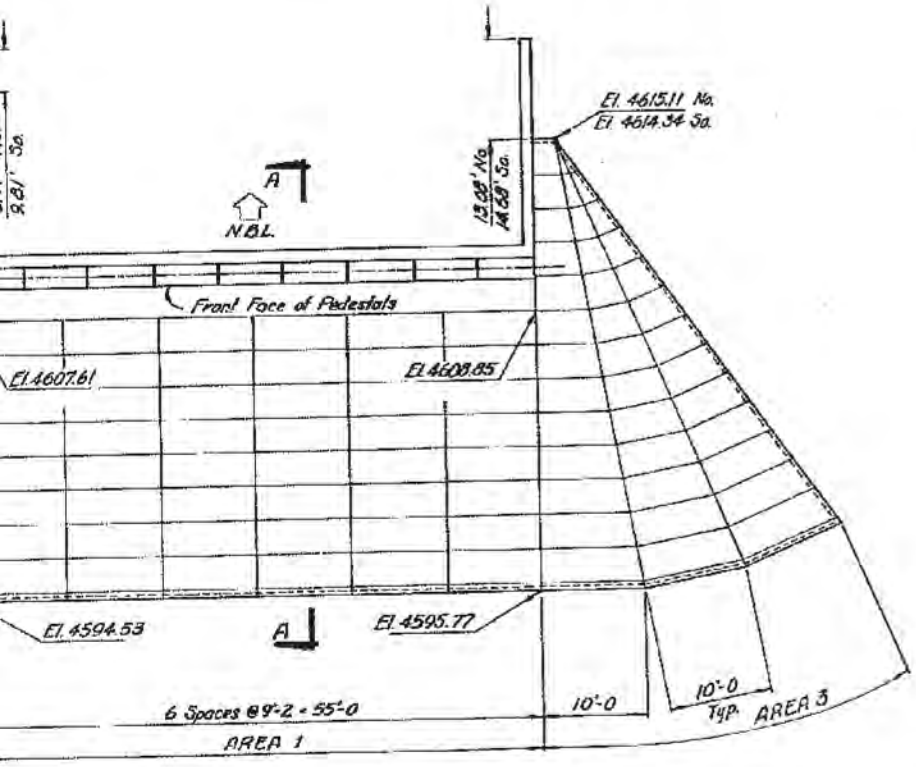


NOTES:

1. Quantity in Sq. Yd. is estimated exposed surface
2. Elevations at Toe of Slope are approximate only and shall be verified at time of Construction by the Engineer
3. Payment for furnishing and placing welded wire fabric shall be included in the contract unit price per square yard for concrete slope protection.
4. All areas may be varied by the Project Engineer to suit field conditions.

PROTECTION ONLY
except where noted

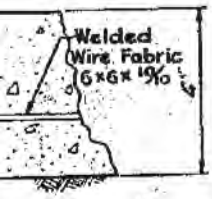


at 40'-0" max. spacing

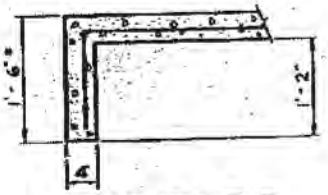


SECTION B-B
(Cut-off wall Detail)

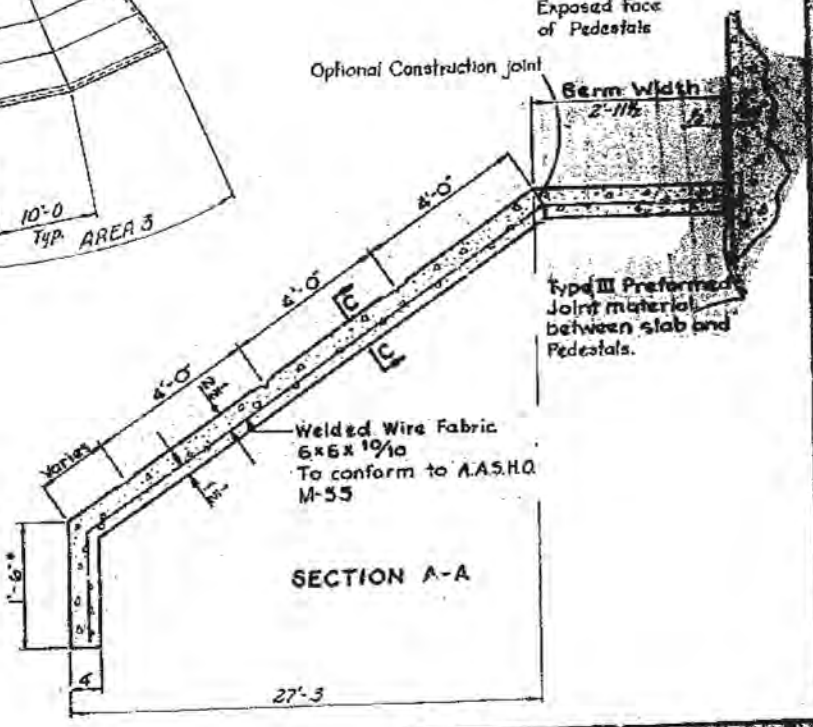


SECTION A-A

Note:
Cut-off wall surface area is not included in estimated quantities of Concrete Slope Protection

| UTAH STATE DEPARTMENT OF TRANSPORTATION |
|---|
| OREM - CENTER ST. |
| T-15 |
| CONCRETE SLOPE |
| REVISIONS |

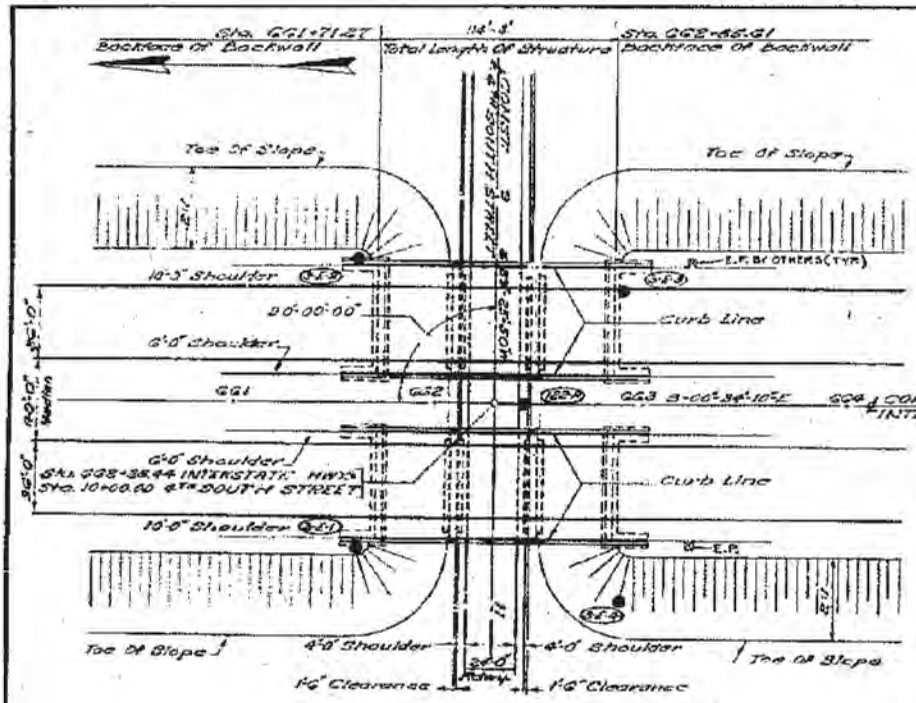


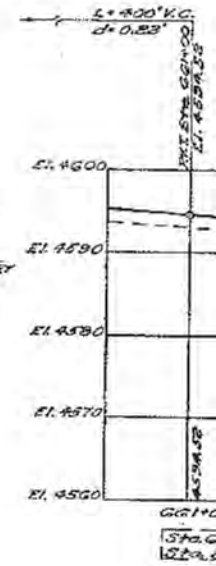


INT

## KEY PLAN
SCALE: 1" = 40'

GE

| ESTIMATE OF QUANTITIES | | | |
|---|---|---|---|
| NO. | ITEM | QUANTITY | |
| 1 | EXCAVATION FOR STRUCTURES, UNCLASS. | Cu Yds. | 1232.64 |
| 2 | IMPORTED BORROW | Cu Yds | 690.41 |
| 3 | CLASS A OVERHAUL | Sta Yds. | 0 |
| 4 | GRANULAR BACKFILL | Cu. Yds. | 659.1 |
| 5 | CONCRETE CLASS "A" | Cu. Yds. | 1,207.43 |
| 6 | REINFORCING STEEL | Lbs | 172,154 |
| 7 | FURNISHING PILE DRIVING EQUIPMENT | 1 L.S. | |
| 8 | PILES (OTHER THAN TIMBER) 30 TONS | Lin. Ft. | 6273.60 |
| 9 | 6" PERFORATED ACCMP UNDERDRAIN | 360 Lin. Ft. | |
| 10 | PRESTRESSED CONCRETE BEAMS TYPE I 36'-3" LONG | Ea. | 44 |
| 11 | PRESTRESSED CONCRETE BEAMS TYPE I 37'-6" LONG | Ea. | 22 |
| 12 | ALUMINUM HANDRAIL (SINGLE RAIL) | 570 Lin. Ft. | |
| 13 | 3" RIGID STEEL CONDUIT | 300 Lin. Ft. | |

DESIGN SPECIFICATIONS:
A.A.S.H.O. Standard Specificatio
For Prestressed Concrete Bridge

ALTERNATE DESIGN:
The Method Of Prestressing To B
All Requirements Specified, Or As

CONSTRUCTION SPECIFICATIONS:
Materials, Construction, And Work
Standard Specifications For Road
Thereto Which Are In Effect At The

LIVE LOAD:
H 20-S16-44. Interstate Alternate L

REINFORCEMENT:
All Reinforcing Steel Bars Shall B
Designation A-15, And Shall Have De

PRESTRESSED BEAM DATA:
Ultimate 28-Day Cylinder Strengt
Ultimate Cylinder Strength Of Con
Initial Tensioning Load Per 48" S
Ultimate Prestressing Steel Stren

HANDLING:
In The handling Of Beams, They
And Must Be Picked Up Only By Mean
Of This Requirement May Result In C

CONCRETE:
Class "A" Concrete And Type II Low

REINFORCEMENT COVER:
Reinforcement Shall Be Accurate
Covering Over The Reinforcement Un
Against Earth-2" Concrete Above Gr

CHAMFERS:
Exposed Concrete Or Substr
Otherwise Noted, Edges Of Concre
Fillets Unless Otherwise Noted, Exp
Chamfers.

FOUNDATIONS:
Foundations May Be Altered, If
Construction. All Piles Shall Be D
Pre-Coring If Necessary.

DATUM:
All Elevations Refer To United State

BENCH MARK:
Iron Pin At 4th South & Station 6+22 (3

SHOP DRAWINGS
All Shop Drawings Shall Be Approve

**FOR INFORMATION ONLY**

| FED. ROAD DIST. NO. | STATE | FED. AID PROJ. NO. | FISCAL YEAR | SHEET NO. | TOTAL SHEETS |
|---|---|---|---|---|---|
| UT | UTAH | I-15-6(9)265 | POST WAR | | |

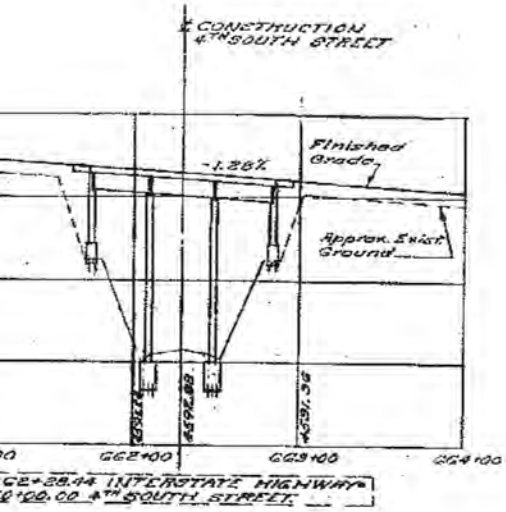


## ERSTATE HIGHWAY PROFILE

SCALE: 1" = 10' VERT.
1" = 50' HOR.

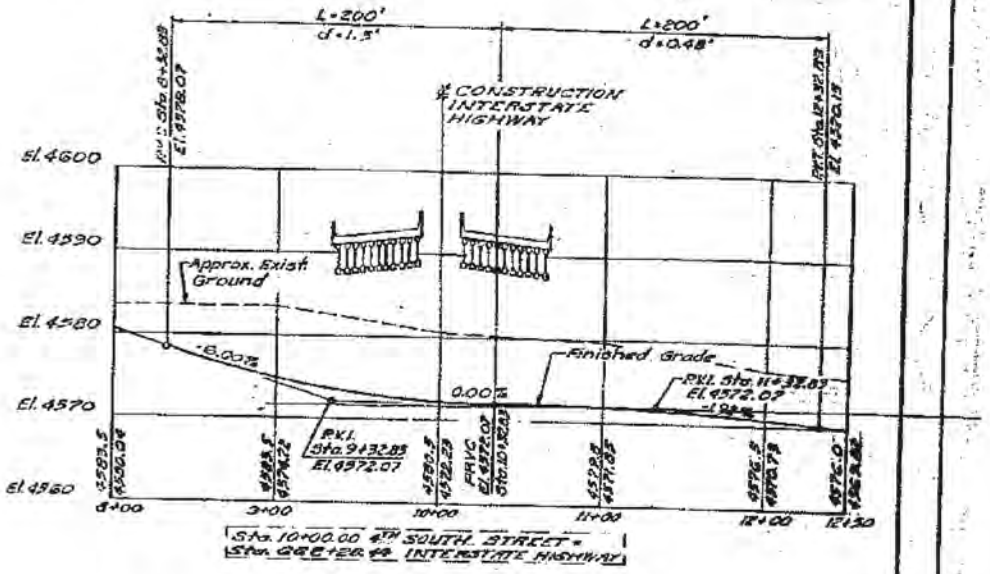


## 4TH SOUTH STREET PROFILE

SCALE: 1" = 10' VERT.
1" = 50' HOR.

## VERAL NOTES

ns For Highway Bridges, 1957 Edition, And Supplements Thereto [See T.1.1533]
s, & Type I A.A.S.H.O. Standard Beam Section.

e Used Shall Be Optional With The Contractor Subject To
Noted On These Plans.

tman-hip Shall Be In Accordance With The State
d And Bridge Construction, 1960 Edition And Supplements
Date Of Request For Bids.

oading In Accordance With The A.A.S.H.O. Specifications of 1957

e Of New Billet Steel, Intermediate Grade, Conforming To A.S.T.M.
Designations Conforming To A.S.T.M. Designation A-305.

n Of Concrete
ncrete At Time Of Prestress
rength.
gth.

5,000 p.s.i.
4,000 p.s.i.
14,000 lbs.
250,000 p.s.i.

ture Be Maintained In An Upright Position At All Times
e Of Approved Devices Anchored Within The Beam. Disregard
ollapse Of The Member.

Nikoll Cement Shall Be Used Throughout. Except Prestressed Beams.

ly Placed In The Forms To Provide The Following Concrete
ss Otherwise Specified: Abutments And Bents: Concrete
ound-2" Deck Concrete: All Cases-1"

uctures Shall Have 1½" Chamfers And 1½" Fillets Unless
he Deck And Sidewalks Shall Have ¾" Chamfers And ½"
ized Concrete Of Prestressed Beams Shall Have ¾"

Necessary, To Suit Conditions Encountered In
Driven Full Length Using Air, Steam Or Diesel Hammer And

s, Coast And Geodetic Survey Mean Sea Level Datum Of 1931.

3 Ft. Right), Bench Mark H-18, Elevation 4589.56

d Before Fabrication Of Steel

## INDEX OF SHEETS


| SHEET NUMBER | DESCRIPTION |
|---|---|
| 1 | KEY PLAN & INDEX SHEET |
| 2 | DECK PLAN & ELEVATION |
| 3 | BORING LOGS |
| 4 | FOUNDATION PLAN |
| 5 | ABUTMENT NO. 1 & NO. 2 |
| 6 | ABUTMENT NO. 3 & NO. 4 |
| 7 | PIERS |
| 8 | FRAMING PLAN |
| 9 | TRANSVERSE SECTION |
| 10 | CONCRETE DETAILS |
| 11 | REINFORCING SCHEDULE |
| | RAILING DETAILS (DRG. NO. ST-1) |
| | PILE DETAILS (ST-3) |
| | OVERHEAD LIGHTING DETAIL (DRG. NO. ST-5) |


## KEY PLAN & INDEX SHEET

SHEET 1 OF 11 SHEETS

Rev. 7-21-60 R.B.J.
Rev. 8-8-60 R.W.I.

DESIGN AND DRAWING BY
WESTERN ENGINEERS, INC. AND
EDWARDS AND KELCEY
CONSULTING ENGINEERS

SUBMITTED BY [signature]
CHIEF ENGINEER
UTAH ENGR. LIC. NO. 2164

REGISTERED PROFESSIONAL ENGINEER
NO. 2164
L. E. BURNELL
STATE OF UTAH

UTAH STATE ROAD COMMISSION
SALT LAKE CITY, UTAH
BRIDGE DEPARTMENT

OREM 400 SOUTH OVERPASS
114'-4" O. TO O.
STA. 662+28.44
I-15-6 (9)265
LEHI-PROVO
UTAH COUNTY

DESIGNED BY V.G.
CHECKED BY R.B.
DRAWN BY J.L.
TRACED BY J.L.
CHECKED BY J.L.
WORK DRAWN BY
NO.
NO.
DWG. NO. F-16

STRUCTURE 3-2

**FOR INFORMATION ONLY**

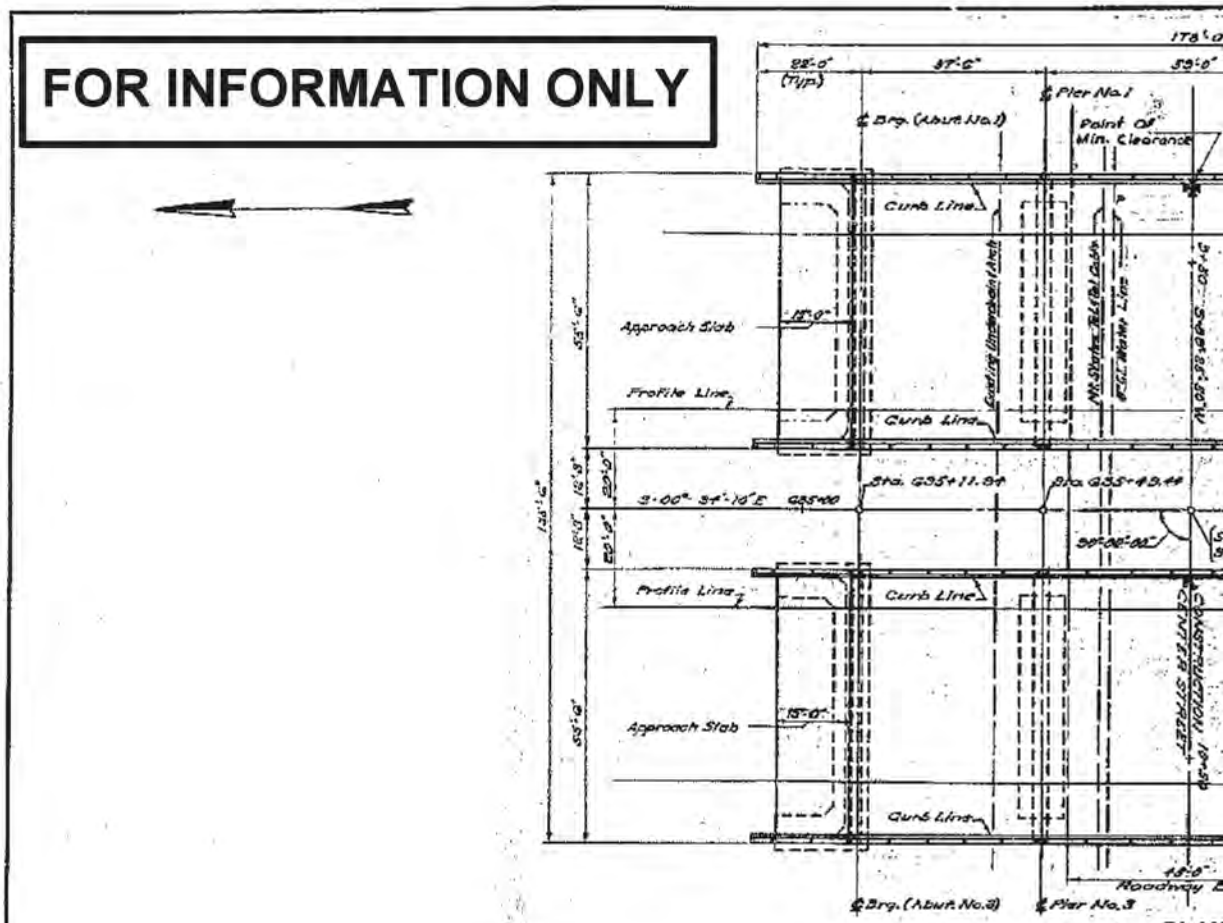


PLAN

SCALE: 1/16" = 1'

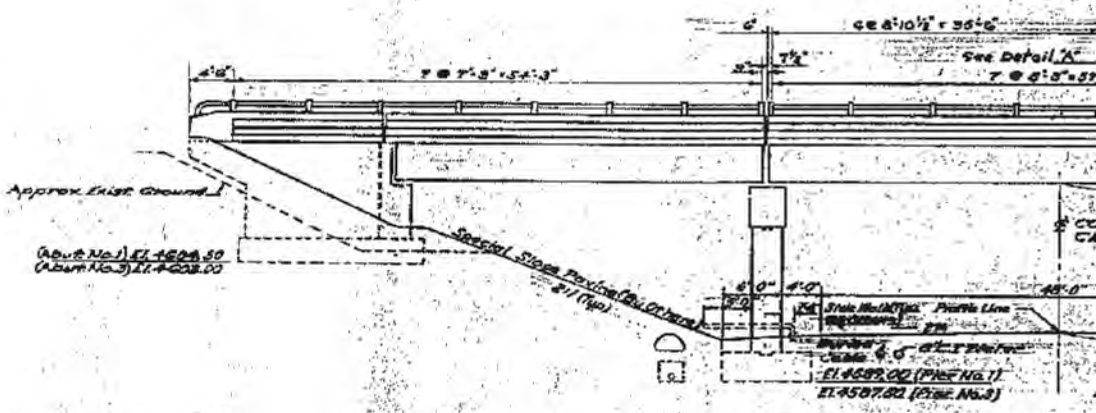


ELEVATIO

SCALE: 1/8" = 1'-

| FED. ROAD DIST. NO. | STATE | FED. AID STRUC. NO. | TOTAL SHEETS |
|---|---|---|---|
| UT. | UTAH | S-15-8(9)265 | |

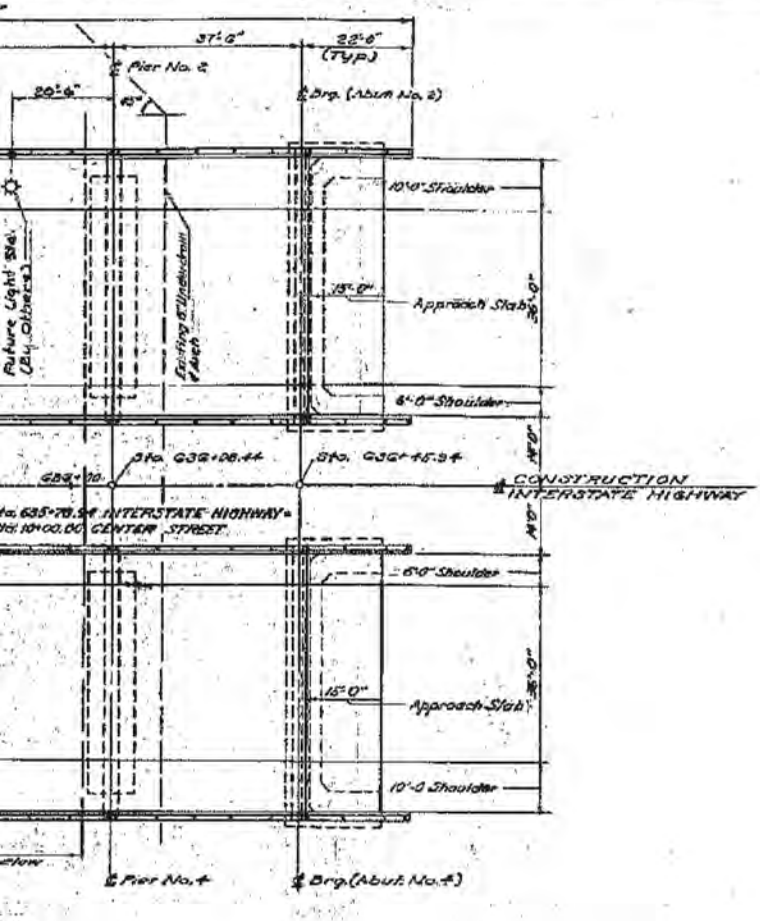


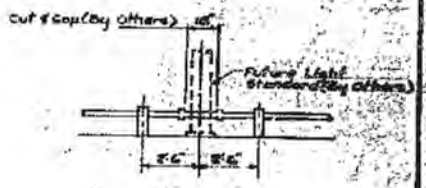


DETAIL "A"
SCALE IN = 1'-0"

NOTES:
FOR RAILING DETAILS SEE DWG. NO. ST-1
UTILITIES SHOWN ARE APPROXIMATE AND NOT LOCATED
EXACT LOCATION TO BE DETERMINED AT TIME OF
CONSTRUCTION BY THE CONTRACTOR
FOR JOINT FILLER DETAILS AT PARAPETS SEE SHEET
13 OF 14 SHEETS.

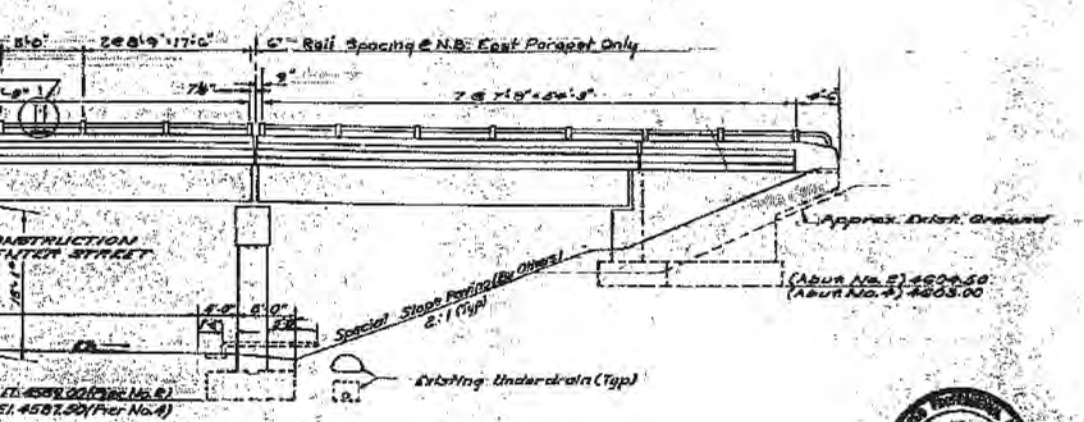


DECK PLAN & ELEVATION

Rev. 7-21-60 BFA

DESIGN AND DRAWING BY
WESTERN ENGINEERS, INC. and
EDWARDS and KELCEY
CONSULTING ENGINEERS

OREM CENTER ST.
INTERCHANGE
STA. 635+28.44
LEIN: PROVO
UTAH COUNTY

STRUCTURE S-6

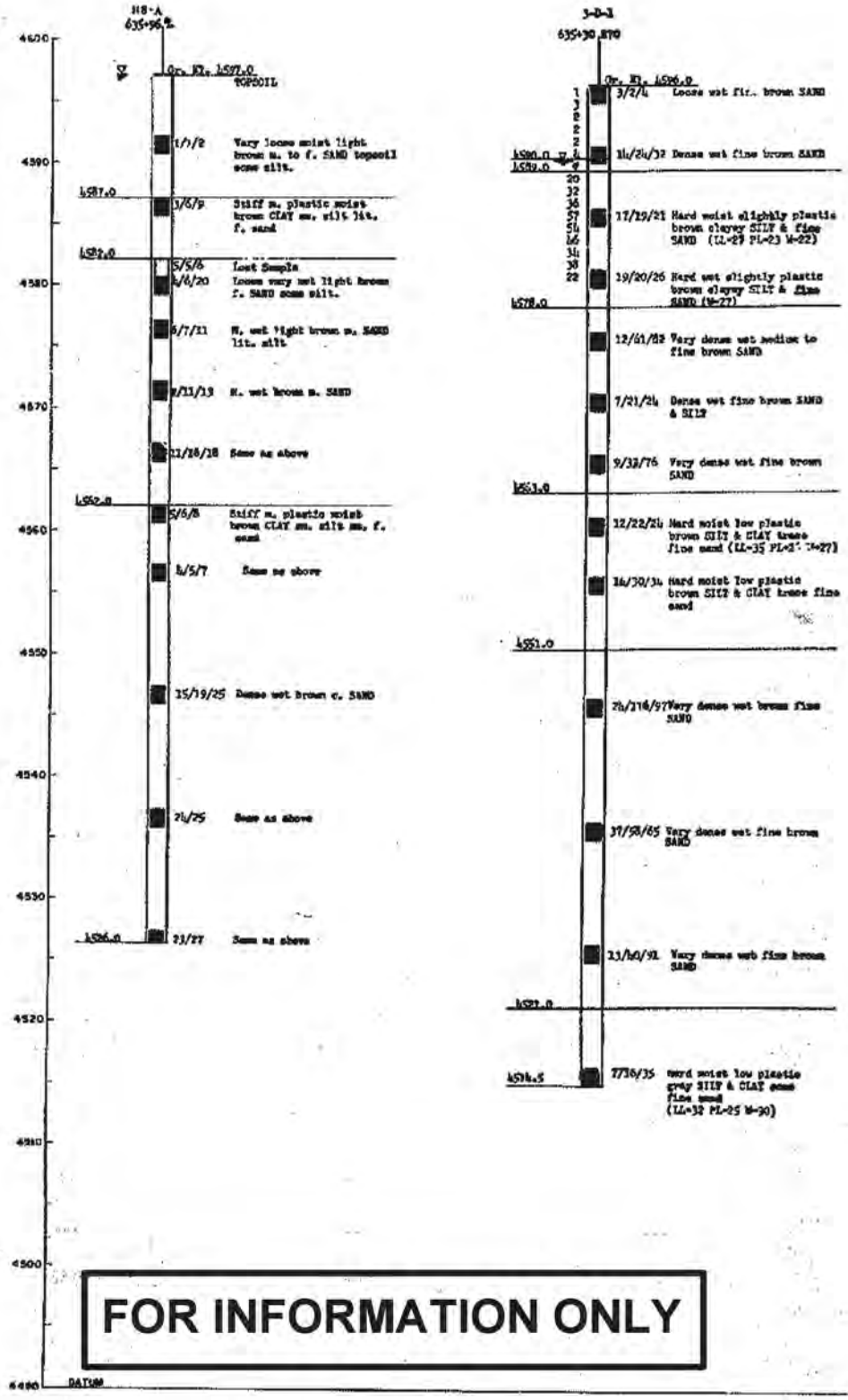


**FOR INFORMATION ONLY**

[redacted]

| FED. ROAD DIST. NO. | STATE | FED. AID PROJ. NO. | FISCAL YEAR | SHEET NO. | TOTAL SHEETS |
|---|---|---|---|---|---|
| VI | UTAH | I-15-6(9)265 | POST WAR | | |

3-D-3

636+42 | 565

Gr. El. 4597.8

| Elev. | Blows | Description |
|---|---|---|
| | 2, 6, 11, 3 | 3/3/3 Very loose moist fine brown SAND TOPSOIL |
| 4591.0 | | |
| | 4, 9, 10 | 3/3/3 Soft wet low plastic GRAY SILT & CLAY some fine sand tr. gravel (LL=21 PL=19 W=19) |
| 4580.0 | | |
| | 22, 26, 42, 31, 36, 34, 40, 47 | 5/12/17 Dense moist fine brown SAND trace clay |
| | | 8/11/21 Dense moist fine brown SAND |
| | | 10/30/42 Very dense wet brown fine SAND |
| | | 18/39/70 Very dense wet fine brown SAND |
| 4570.0 | | |
| | | 9/14/22 Very stiff wet slightly plastic brown clayey SILT some fine SAND (LL=25 PL=23 W=27) |
| | | 6/10/19 Very stiff moist low plastic brown SILT & CLAY lit. fine SAND (W=25) |
| | | 5/8/16 Very stiff wet medium plastic brown CLAY & SILT tr. fine sand (LL=32 PL=25 W=31) |
| 4558.0 | | |
| | | 25/37/48 Very dense wet medium to fine brown SAND |
| | | 57/93/107 Very dense wet fine brown SAND trace clay |
| | | 29/78/78 Very dense moist fine dark gray SAND |
| 4522.0 | | |
| | | 4/11/13 Very stiff wet medium plastic dark gray CLAY & SILT trace fine sand (LL=30 PL=25 W=30) |
| 4513.0 | | |
| | | 40/47/73 Very dense wet medium to fine gray SAND |
| 4502.0 | | |
| 4495.5 | | 31/47/55 Hard wet medium plastic gray CLAY & SILT little fine sand (LL=28 PL=24 W=26) |

## LEGEND

Boring No. → 1-4-1

Interstate Station → 22+63 372 — Offset

Ground Elevation → Gr. El. 4562

Ground Water Table Elevation 4557.1 ▽

Number of Blows Used to drive casing 12 inches with 300 lb. hammer falling 2 ft. (Typical) → 3, 7, 9, 12, 19, 10, 17, 22, 33, 40, 36, 43, 86, 92, 106

Strata Change Elevation (Typical) 4550

Boring Advanced Without Casing

Location of Sample (Typical) 4539

Bottom of Boring Elevation 4535.5

Number of Blows Used to drive 1-3/8" I.D. sampler with 140 lb. hammer falling 30 inches → 1st. 6 inches, 2nd. 6 inches, 3rd. 6 inches

| Elev. | Blows | Description |
|---|---|---|
| 4560 | 3, 7, 9 | 2/4/5 Stiff m. plastic brown clay some silt-TOPSOIL |
| | 12, 19, 10, 17, 22, 33, 40 | 11/13/27 M. dense wet tan m. to c. SAND, some silt, tr. f. gravel |
| | 36, 43, 86 | 25/21/30 Dense wet tan m. to c. SAND, some gravel |
| | 92, 106 | |
| | | 7/6/8 Stiff, low plastic brown CLAY & SILT, tr. f. sand (LL = 40, PL = 28, W = 32) |
| | | 11/10/12 Very stiff, plastic gray CLAY & SILT, tr. f. sand (W = 35, qu = 12/ft) |
| | | 9/12/20 Very stiff varved plastic gray silty CLAY & f. silty SAND |

visual soil description for each sample and results of classification tests, if any (Typical)

ABBREVIATIONS IF AND WHEN USED:

| | | |
|---|---|---|
| br. = brown | m. = medium | LL = Liquid Limit in % |
| gr. = gray | c. = coarse | PL = Plastic Limit in % |
| org. = organic | sm. = some | W = Natural Moisture Content in % |
| f. = fine | tr. = trace | qu = Unconfined compression test from pocket penetrometer in T/ft.² |
| v. f. = very fine | lit. = little | |

STATE OF UTAH PROFESSIONAL ENGINEER

# BORING LOGS

SHEET 3 OF 14 SHEETS

UTAH STATE ROAD COMMISSION
SALT LAKE CITY, UTAH
BRIDGE DEPARTMENT

OREM CENTER ST. INTERCHANGE
136'-4" O.TO O.
STA. 635+78.94 I-15-6 (9)265
LEHI-PROVO UTAH COUNTY

DESIGN AND DRAWING BY
WESTERN ENGINEERS, INC. AND
EDWARDS AND KELCEY
CONSULTING ENGINEERS

SUBMITTED BY [signature] CHIEF ENGINEER
UTAH ENGR. LIC. NO. 2164

DRAWN BY CMF SCALE AS SHOWN
CHECKED BY DKE DATE 1-1-57
TRACED BY DKE APPROVED D.V. Sargent
CHECKED BY DKE

No. No. F-15

STRUCTURE 3-D

2nd Contr.

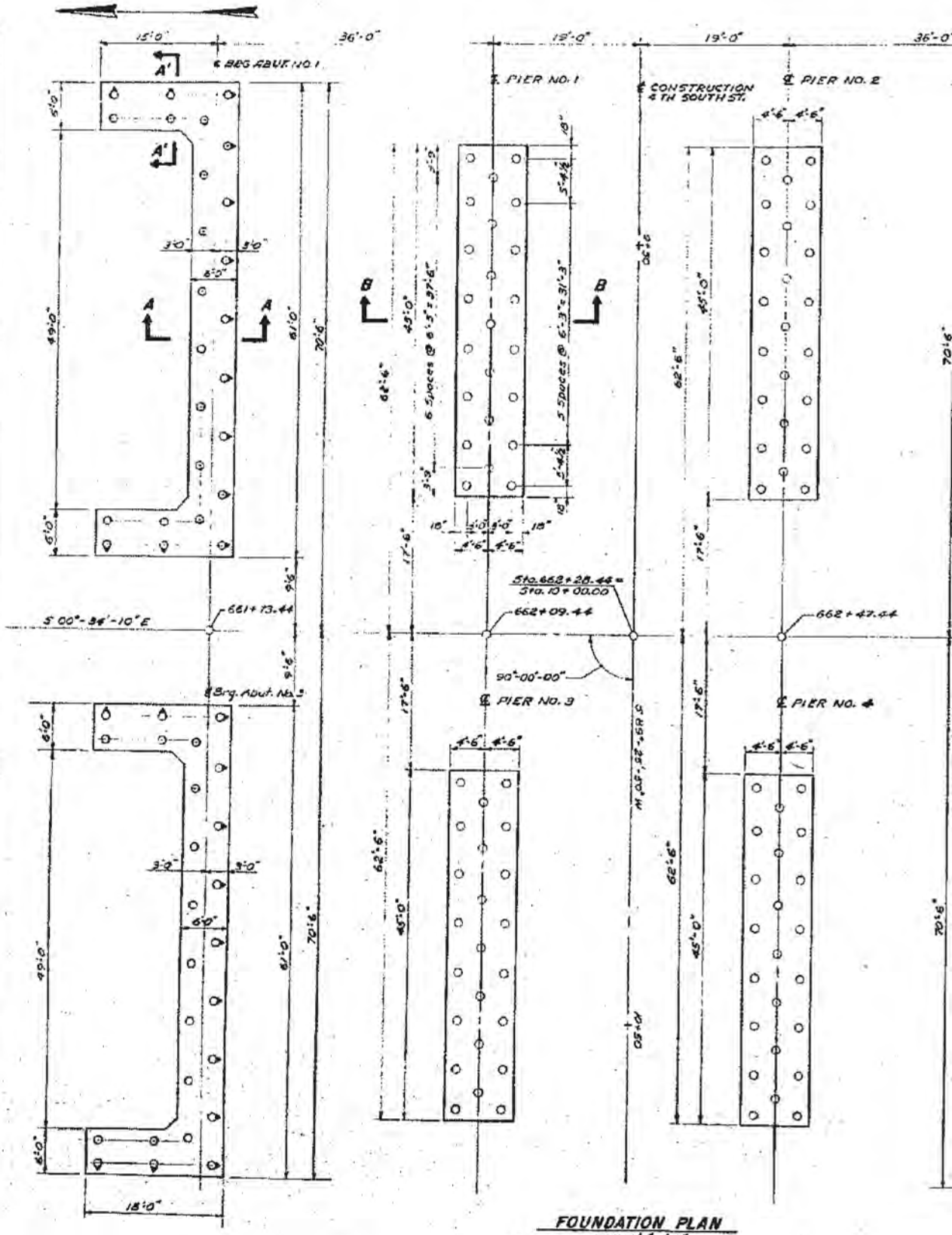


DGN Files 1P PWPlans16721\4433-E-16-04_FoundFoundn

02-MAY-2005

**FOR INFORMATION ONLY**

| FED. ROAD DIST. NO. | STATE | FED. AID PROJ. NO. | FISCAL YEAR | SHEET NO. | TOTAL SHEETS |
|---|---|---|---|---|---|
| UT | UTAH | I-15-6(94)265 | POST WAR | | |

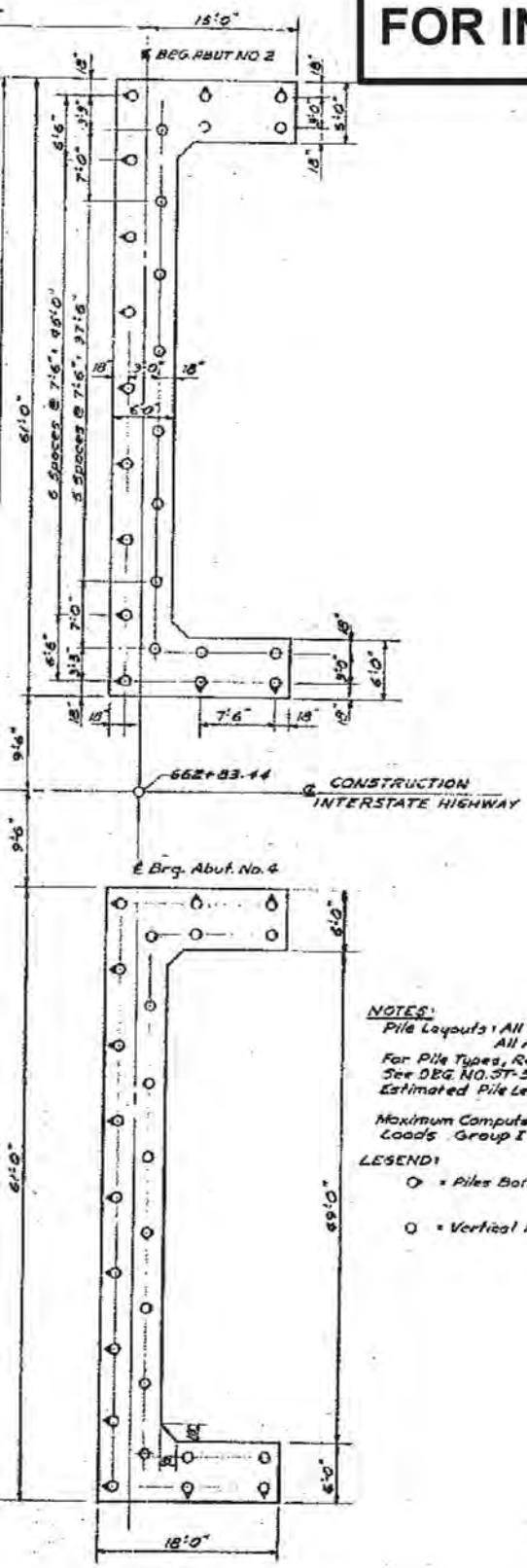


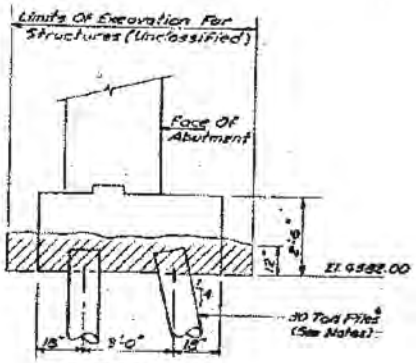


**SECTION A-A**
SCALE: 3/8" = 1'-0"

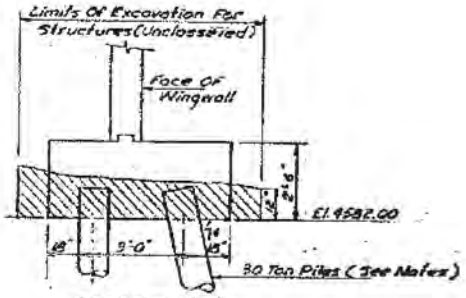


**SECTION A'-A'**
SCALE: 3/8" = 1'-0"

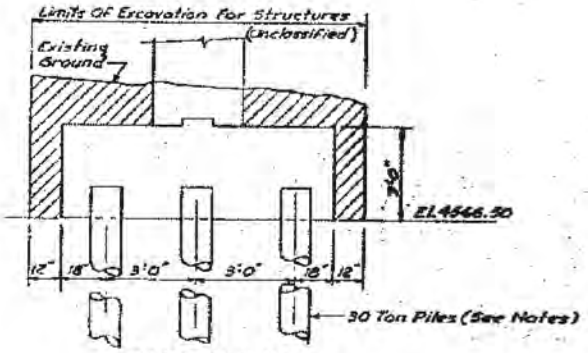


**SECTION B-B**
SCALE: 3/8" = 1'-0"

NOTES:
Pile Layouts: All Piers - See Pier No. 1
All Abutments - See Abut. No. 2
For Pile Types, Reinforcement (Dowels
See DEG. NO. ST-3
Estimated Pile Length - Abutments 30'
- Piers 15'
Maximum Computed Pile Loads Group I — Abut. 28 Tons — Piers 26.0 Tons

LEGEND:
O = Piles Battered In Direction Of Arrow
O = Vertical Pile

**FOUNDATION PLAN**

Rev. 7-21-60 RBJ
Rev. 8-8-60 RWI

REGISTERED PROFESSIONAL ENGINEER NO. 2164 J. R. KERVILLE STATE OF UTAH

DESIGN AND DRAWING BY
WESTERN ENGINEERS, INC. AND
EDWARDS AND KELCEY
CONSULTING ENGINEERS

SUBMITTED BY J. R. Kerville CHIEF ENGINEER
UTAH ENGR. LIC. NO. 2164

UTAH STATE ROAD COMMISSION
SALT LAKE CITY, UTAH
BRIDGE DEPARTMENT

**OREM 400 SOUTH OVERPASS**
**114'-4" O. TO O.**
STA. 662+28.44 I-15-6(94)265
LEHI-PROVO UTAH COUNTY

DESIGNED BY: YS
DRAWN BY: JK
TRACED BY:
CHECKED BY: JLB

DATE: 8-8-60
APPROVED: J. R. Kerville
STATE ENGINEER

No. F-16

STRUCTURE S-2

FOR IN

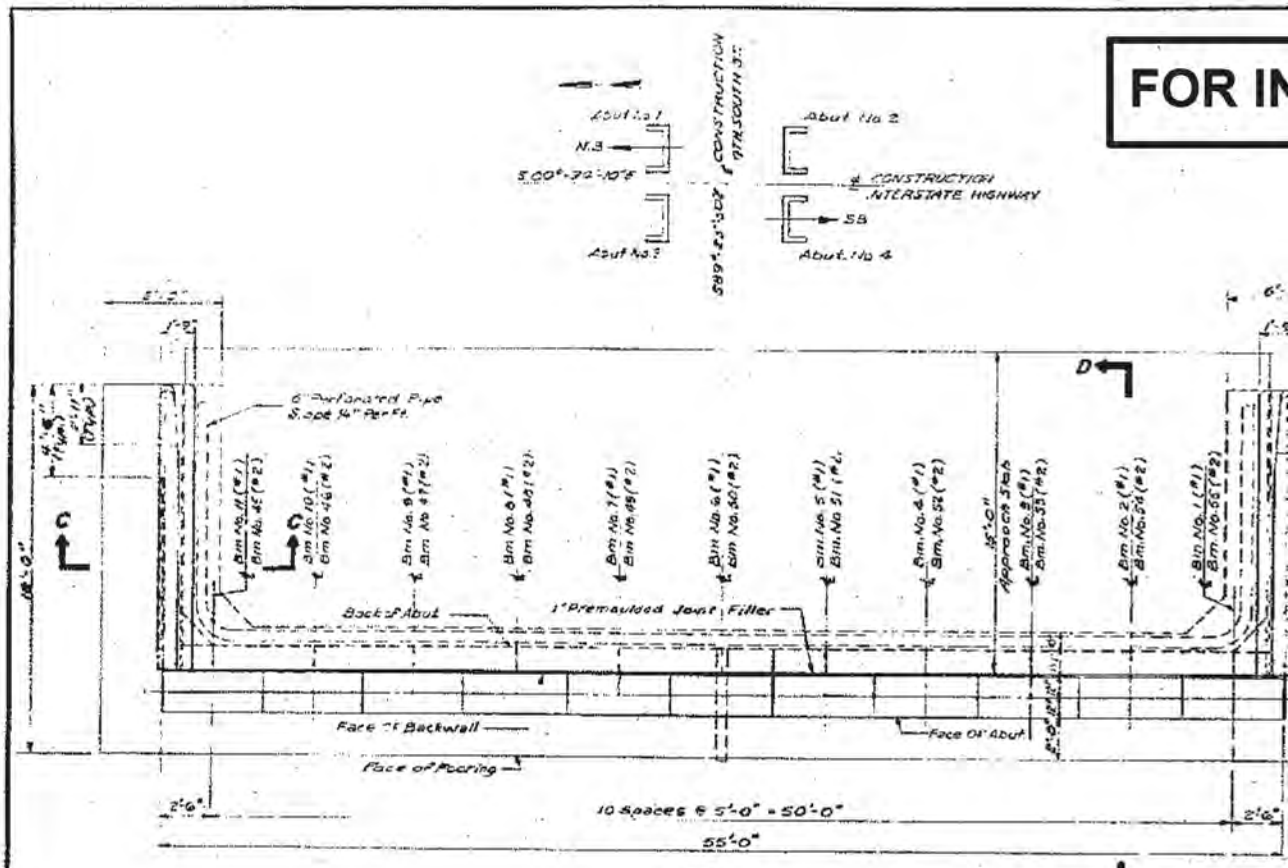


**PLAN**
SCALE: 1/4" = 1'-0"

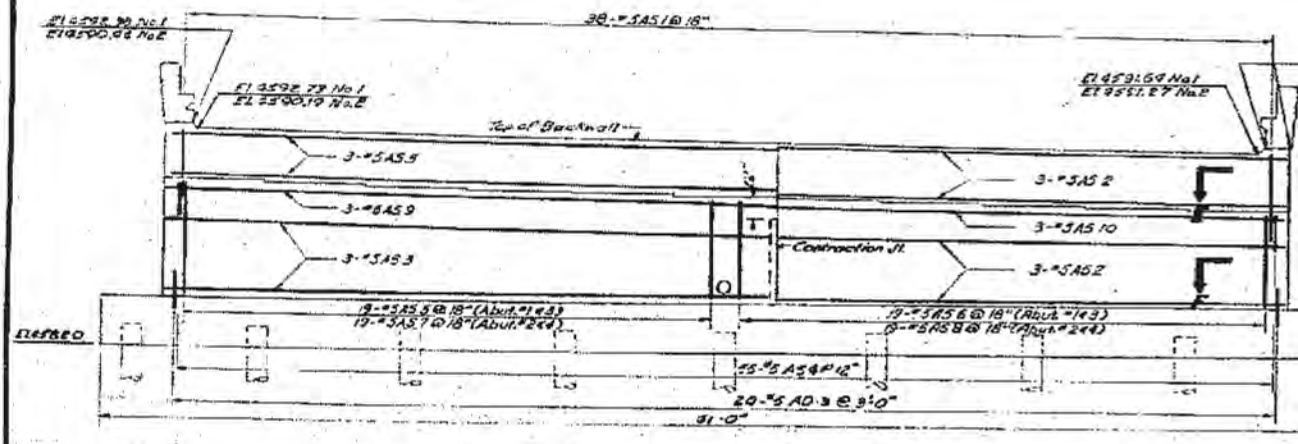


**REINFORCEMENT FRONT FACE ELEVATION**
SCALE: 1/4" = 1'-0"

**NFORMATION ONLY**

| FED. ROAD DIST. NO. | STATE | FED. AID PROJ. NO. | FISCAL YEAR | SHEET NO. | TOTAL SHEETS |
|---|---|---|---|---|---|
| UT | UTAH | I-15-6(9)265 | POST WAR | | |

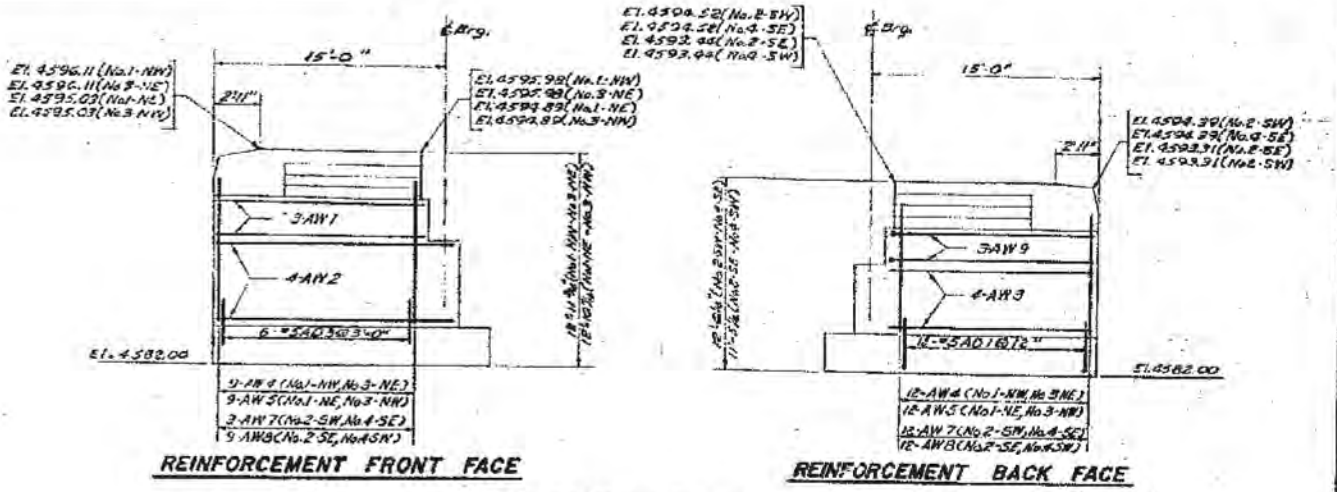


**REINFORCEMENT FRONT FACE** **REINFORCEMENT BACK FACE**

**ELEVATION OF WINGWALLS**

SCALE: 3/16" 1'-0"

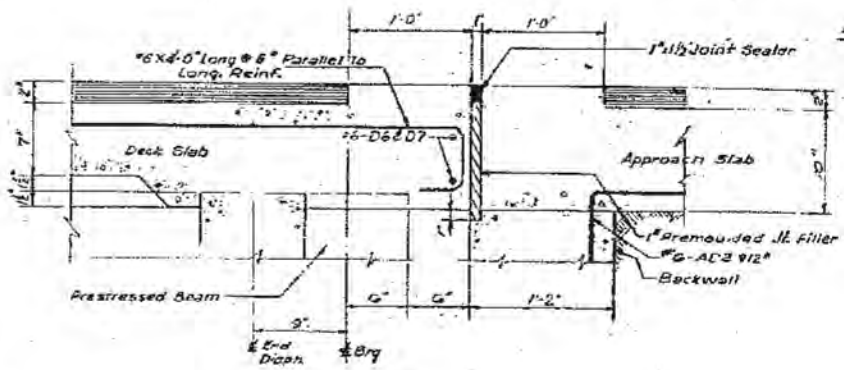


**DETAIL "A"**

SCALE: 1½" = 1'-0"

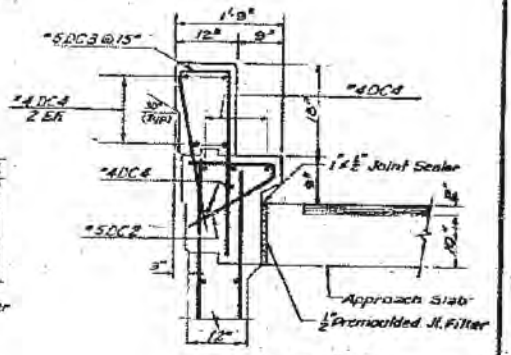


**DETAIL "B"**

SCALE: ¾" = 1'-0"

NORTHBOUND ROADWAY

| BEAM No. | ELEVATION ABUT. No. 1 | BEAM No. | ELEVATION ABUT. No. 2 |
|---|---|---|---|
| 1 | 4589.35 | 45 | 4587.93 |
| 2 | 4589.46 | 46 | 4588.03 |
| 3 | 4589.56 | 47 | 4588.15 |
| 4 | 4589.67 | 48 | 4588.26 |
| 5 | 4589.77 | 49 | 4588.36 |
| 6 | 4589.87 | 50 | 4588.47 |
| 7 | 4589.99 | 51 | 4588.57 |
| 8 | 4590.08 | 52 | 4588.68 |
| 9 | 4590.19 | 53 | 4588.78 |
| 10 | 4590.29 | 54 | 4588.90 |
| 11 | 4590.40 | 55 | 4588.99 |

El. 4591.89 No. 1
El. 4591.52 No. 2

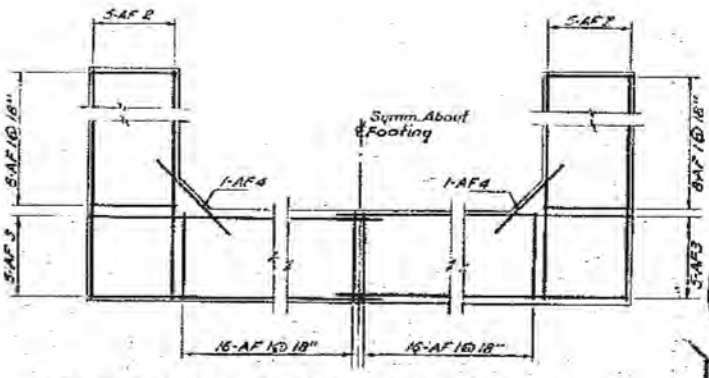


**REINFORCEMENT BOTTOM** **REINFORCEMENT TOP**

**PLAN OF FOOTING**

SCALE: 3/16" = 1'-0"

NOTES:

For Footings And Pile Location Plan See Sheet 9 of 11 Sheets. For Sections C-C, D-D, E-E, F-F And Contraction Joint Detail See Sheet No. 6 of 11 Sheets.

Reinforcement To Be Placed To Avoid Obstructions.

**ABUTMENTS NO. 1 & NO. 2**

SHEET 5 OF 11 SHEETS

Rev. 7-21-60 RW

DESIGN AND DRAWING BY
WESTERN ENGINEERS, INC. AND
EDWARDS AND KELCEY
CONSULTING ENGINEERS

SUBMITTED BY: J. R. Newville
CHIEF ENGINEER
UTAH ENGR. LIC. NO. 2164

UTAH STATE ROAD COMMISSION
SALT LAKE CITY, UTAH
BRIDGE DEPARTMENT

**OREM 400 SOUTH OVERPASS**
**114'-4" O. TO O.**

STA. 662+28.44 I-15-6(9)265
LEHI-PROVO UTAH COUNTY

DESIGNED BY J.L.B. SCALE AS NOTED
DRAWN BY W.B.C. DATE J.L.B. 1960
TRACED BY D.H. Sargent
CHECKED BY J.L.B. COMP. BASIS 4
No. No. Dwg. No. F-16

STRUCTURE 3-E

FOR INFORM

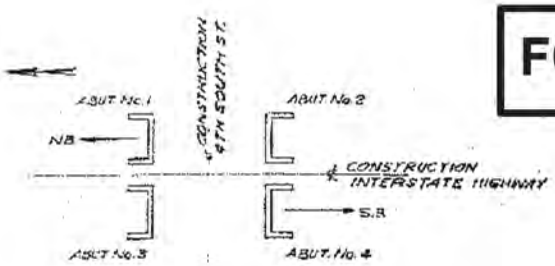


KEY PLAN
SCALE: 1"=100'

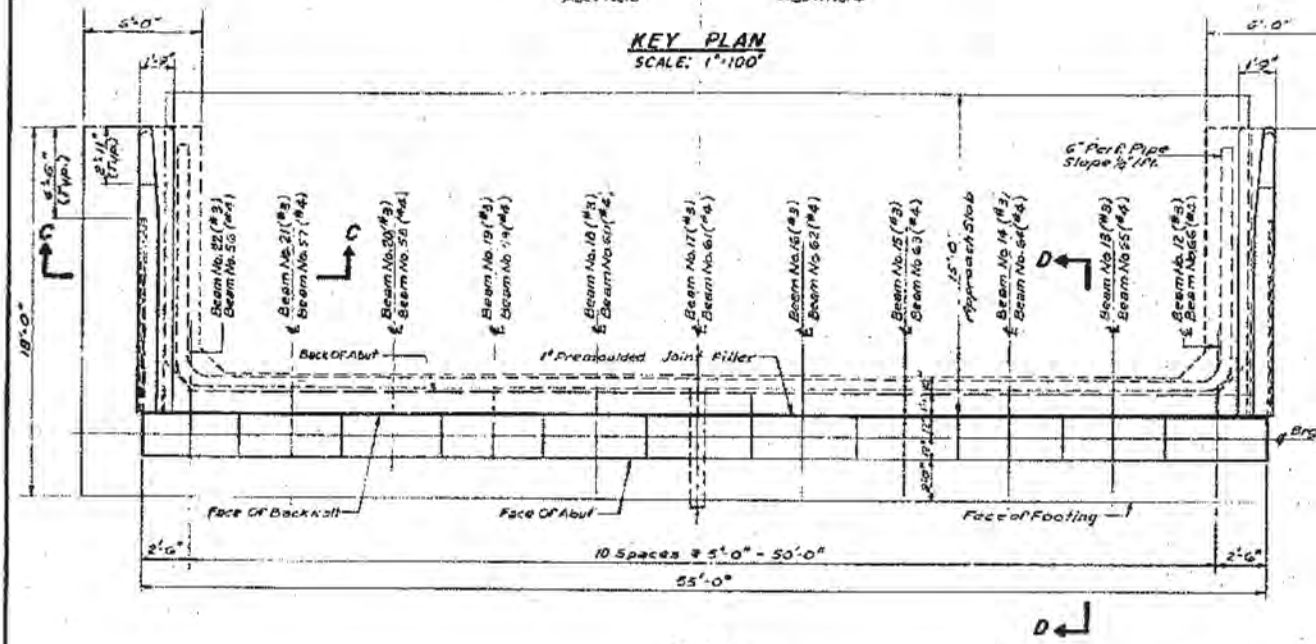


PLAN
SCALE: ¼"=1'-0"

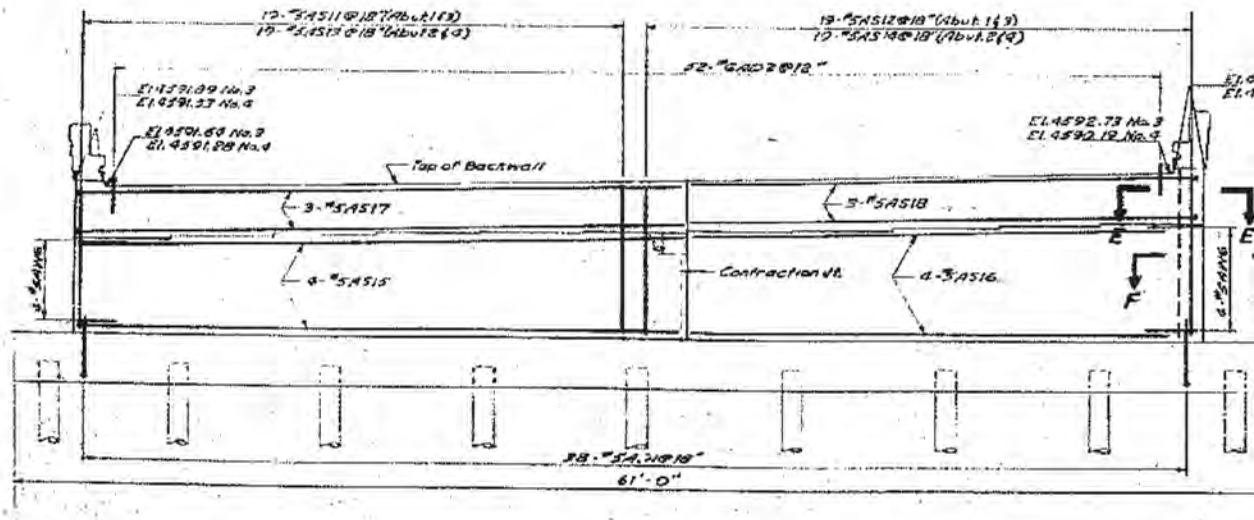


REINFORCEMENT BACK FACE
ELEVATION
SCALE: ¼"=1'-0"

MATION ONLY

Note
For Curb & Parapet Details See DRG. No. ST-1

| FED. ROAD DIST. NO. | STATE | FED. AID PROJ. NO. | FISCAL YEAR | SHEET NO. | TOTAL SHEETS |
|---|---|---|---|---|---|
| 8 T | UTAH | I-15-8(91)265 | POST WAR | | |

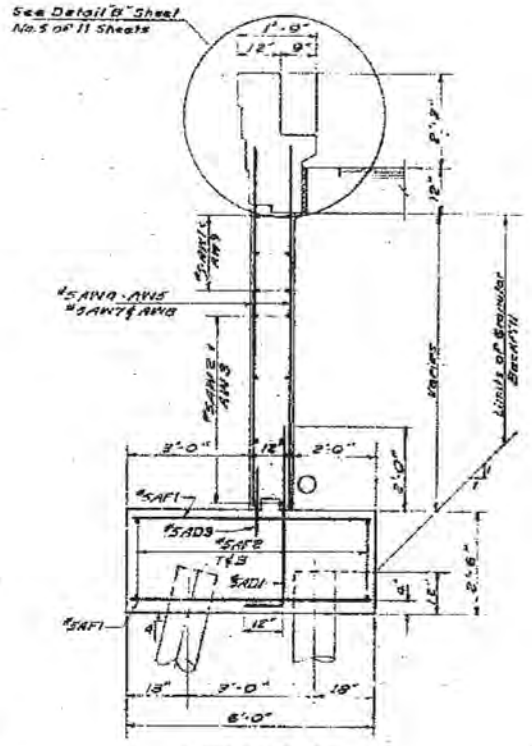


SECTION C-C
SCALE 1/2" = 1'-0"

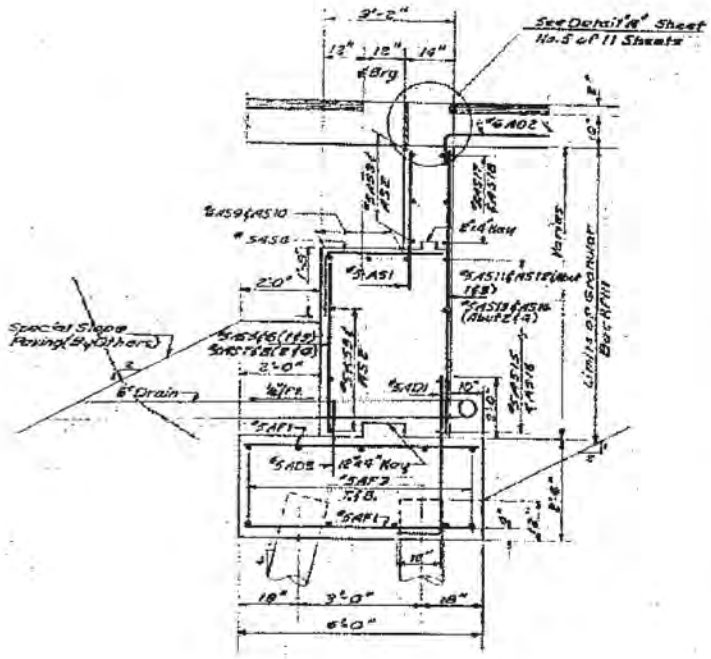


SECTION D-D
SCALE: 1/2" = 1'-0"

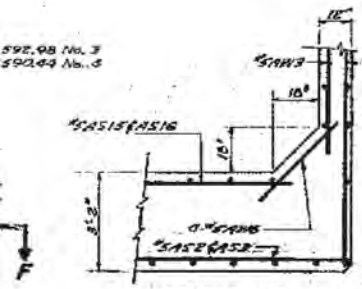


SECTION F-F
SCALE: 3/8" = 1'-0"

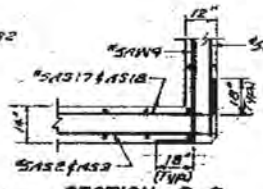


SECTION E-E
SCALE: 3/8" = 1'-0"

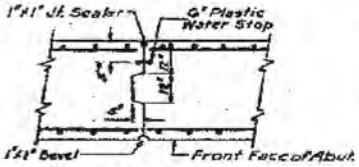


CONTRACTION JOINT DETAIL
SCALE: 3/8" = 1'-0"

SOUTHBOUND ROADWAY

| BEAM No. | ELEVATION ABUT. No. 3 | BEAM No. | ELEVATION ABUT. No. 4 |
|---|---|---|---|
| 12 | 4590.10 | 56 | 4588.99 |
| 13 | 4590.27 | 57 | 4588.80 |
| 14 | 4590.19 | 58 | 4588.98 |
| 15 | 4590.06 | 59 | 4588.48 |
| 16 | 4589.96 | 60 | 4588.37 |
| 17 | 4589.87 | 61 | 4588.[illegible] |
| 18 | 4589.77 | 62 | 4588.36 |
| 19 | 4589.67 | 63 | 4588.26 |
| 20 | 4589.56 | 64 | 4588.15 |
| 21 | 4589.46 | 65 | 4588.05 |
| 22 | 4589.35 | 66 | 4587.95 |

NOTES
For Footings & Pile Location Plan See Sheet No. 4 of 11 Sheets
For Wingwall Elevation & Footing Reinforcement See Sheet No. 5 of 11 Sheets
Reinforcement To Be Placed To Avoid Obstructions

ABUTMENTS NO. 3 & NO. 4

Rev. 7-21-60 RBJ

REGISTERED PROFESSIONAL ENGINEER
No. 2124
J. B. MERVILLE
STATE OF UTAH

DESIGN AND DRAWING BY
WESTERN ENGINEERS, INC. AND
EDWARDS AND KELCEY
CONSULTING ENGINEERS

SUBMITTED BY J. B. Merville
CHIEF ENGINEER
UTAH ENGR. LIC. NO. 2124

SHEET 8 OF 11 SHEETS

UTAH STATE ROAD COMMISSION
SALT LAKE CITY, UTAH
BRIDGE DEPARTMENT

OREM 400 SOUTH OVERPASS
114'-4" O. TO O.
STA. 662+28.44 I-15-8(91)265
LEHI-PROVO UTAH COUNTY

2nd Contr.

DESIGNED BY J.L.B. DRAWN BY R.B.J.
TRACED BY J.L.B. CHECKED BY J.L.B.
DATE Aug. 15, 1960
APPROVED BY B.L. Sargent
DWG. NO. F-16

STRUCTURE 3-E

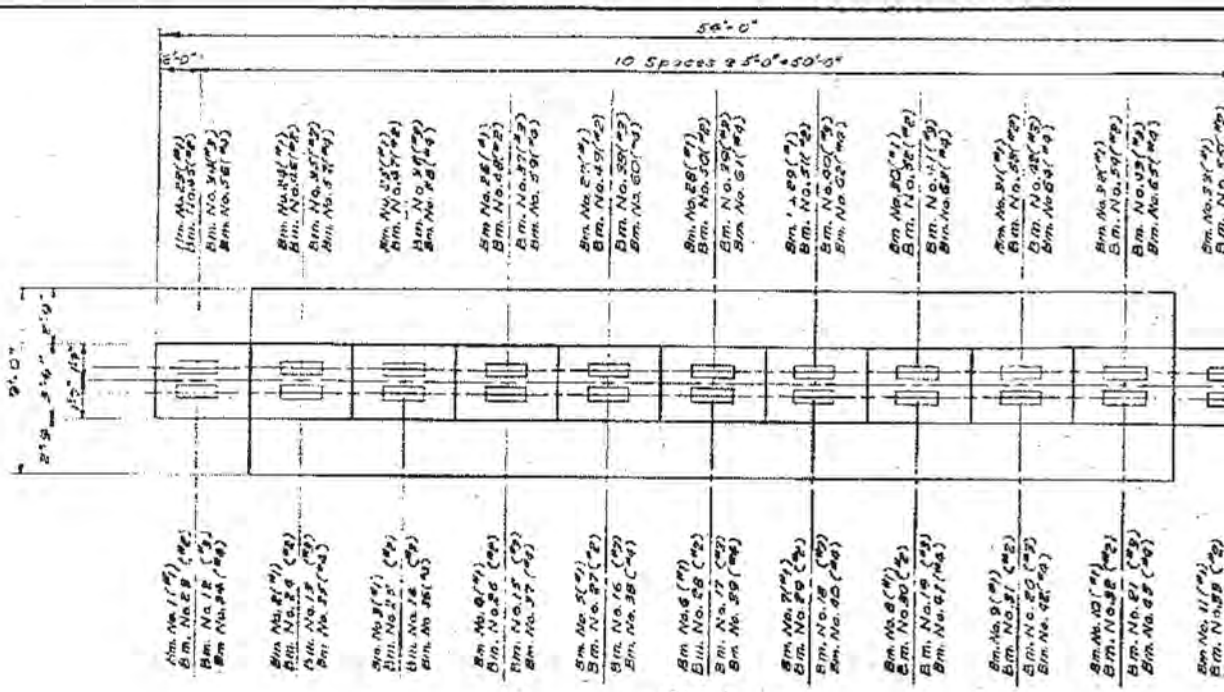


**PLAN**
SCALE: 1/4" = 1'-0"

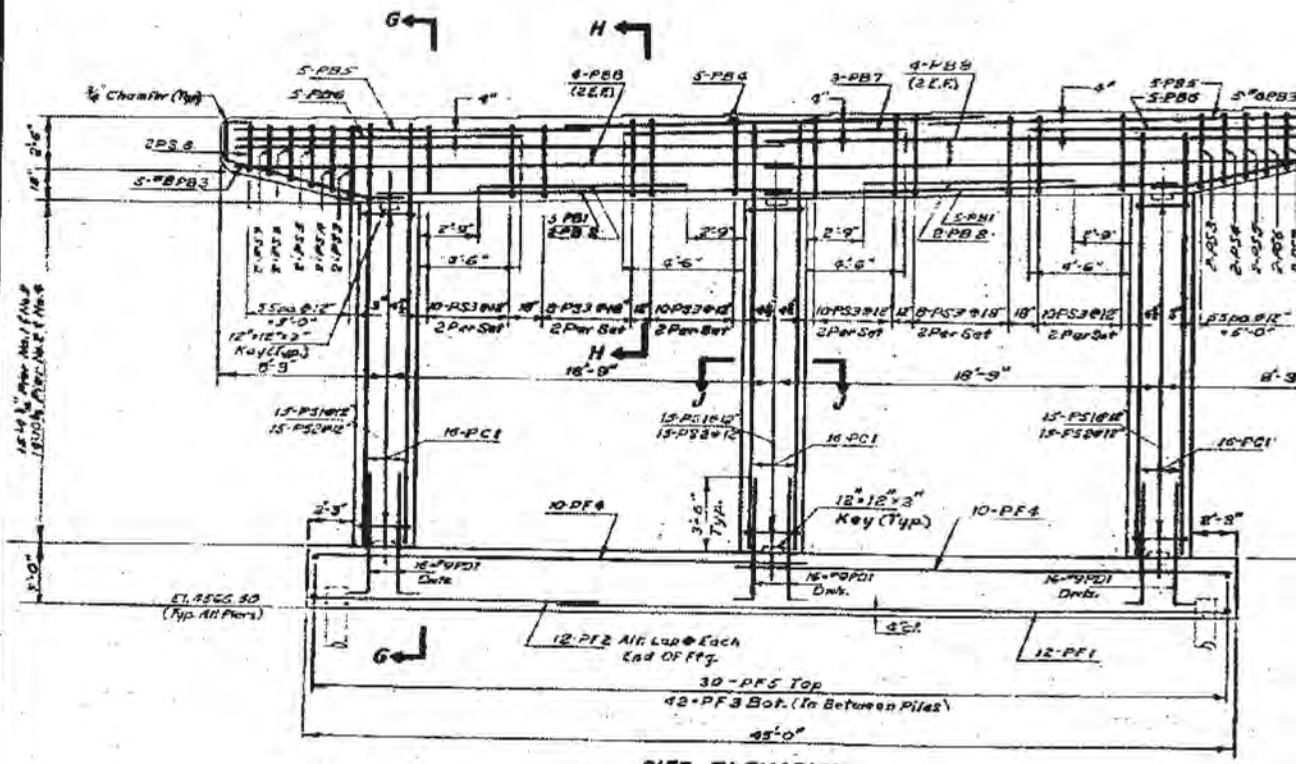


**PIER ELEVATION**
SCALE: 1/4" = 1'-0"

DGN File: IP_PWPlans16721A433.E-16-07 Form Feature
IS-HWY-2005

| FED. ROAD DIST. NO. | STATE | FED. AID PROJ. NO. | FISCAL YEAR | SHEET NO. | TOTAL SHEETS |
|---|---|---|---|---|---|
| 11 | UTAH | I-15-6(91)265 | POST WAR | | |

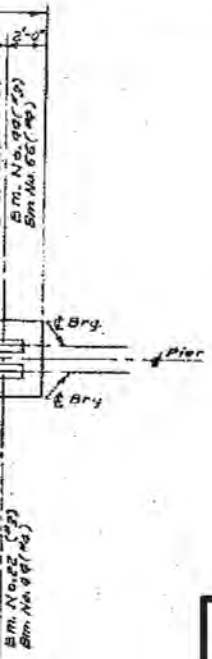


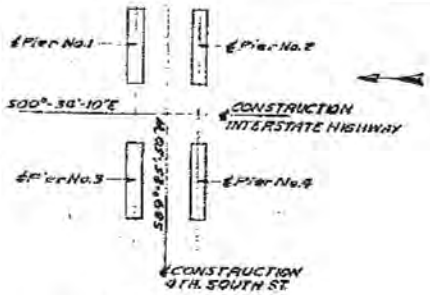


**KEY PLAN**
SCALE 1" = 50'

Note:
All beam seat bearing areas on abutments and piers shall be poured high and rubbed or ground to the grades shown within a tolerance of ± 1/8 inch. Finished bearing areas must be level and smooth so as to provide even bearing over the entire area of the elastomeric bearing pad, and high or low spots will not be permitted.

**FOR INFORMATION ONLY**

NORTHBOUND ROADWAY

| BEAM NO. | SEAT ELEVATION PIER NO. 1 | BEAM NO. | SEAT ELEVATION PIER NO. 2 |
|---|---|---|---|
| 1 | 4588.80 | 23 | 4588.42 |
| 2 | 4589.01 | 24 | 4588.52 |
| 3 | 4589.11 | 25 | 4588.63 |
| 4 | 4589.22 | 26 | 4588.73 |
| 5 | 4589.32 | 27 | 4588.83 |
| 6 | 4589.42 | 28 | 4588.94 |
| 7 | 4589.53 | 29 | 4589.04 |
| 8 | 4589.63 | 30 | 4589.15 |
| 9 | 4589.74 | 31 | 4589.25 |
| 10 | 4589.84 | 32 | 4589.35 |
| 11 | 4589.94 | 33 | 4589.46 |
| 23 | 4588.88 | 45 | 4588.40 |
| 24 | 4588.99 | 46 | 4588.50 |
| 25 | 4589.09 | 47 | 4588.61 |
| 26 | 4589.20 | 48 | 4588.71 |
| 27 | 4589.30 | 49 | 4588.81 |
| 28 | 4589.40 | 50 | 4588.92 |
| 29 | 4589.51 | 51 | 4589.02 |
| 30 | 4589.61 | 52 | 4589.12 |
| 31 | 4589.72 | 53 | 4589.23 |
| 32 | 4589.82 | 54 | 4589.34 |
| 33 | 4589.93 | 55 | 4588.11 |

SOUTHBOUND ROADWAY

| BEAM NO. | SEAT ELEVATION PIER NO. 1 | BEAM NO. | SEAT ELEVATION PIER NO. 2 |
|---|---|---|---|
| 12 | 4589.99 | 34 | 4589.36 |
| 13 | 4589.84 | 35 | 4589.35 |
| 14 | 4589.74 | 36 | 4589.25 |
| 15 | 4589.63 | 37 | 4589.15 |
| 16 | 4589.53 | 38 | 4589.04 |
| 17 | 4589.42 | 39 | 4588.94 |
| 18 | 4589.32 | 40 | 4588.83 |
| 19 | 4589.22 | 41 | 4588.73 |
| 20 | 4589.11 | 42 | 4588.63 |
| 21 | 4589.01 | 43 | 4588.52 |
| 22 | 4588.90 | 44 | 4588.42 |
| 34 | 4589.93 | 56 | 4589.44 |
| 35 | 4589.82 | 57 | 4589.34 |
| 36 | 4589.72 | 58 | 4589.23 |
| 37 | 4589.61 | 59 | 4589.13 |
| 38 | 4589.51 | 60 | 4589.02 |
| 39 | 4588.40 | 61 | 4588.92 |
| 40 | 4589.30 | 62 | 4588.81 |
| 41 | 4589.20 | 63 | 4588.71 |
| 42 | 4589.09 | 64 | 4588.61 |
| 43 | 4588.99 | 65 | 4588.50 |
| 44 | 4588.88 | 66 | 4588.40 |

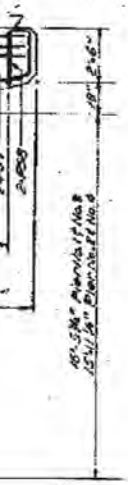

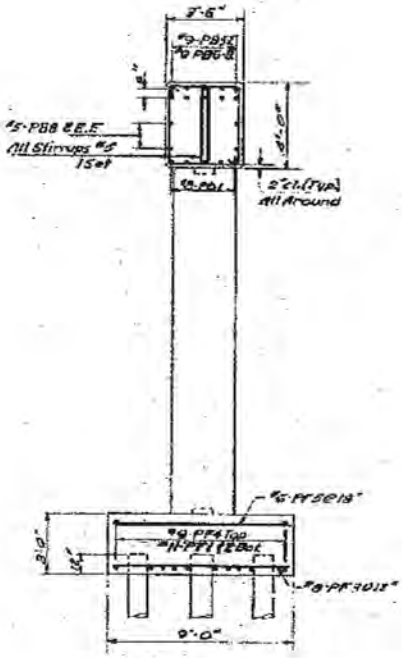


**SECTION G-G**
SCALE 1/4" = 1'-0"

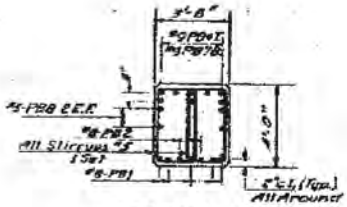


**SECTION H-H**
SCALE: 1/4" = 1'-0"

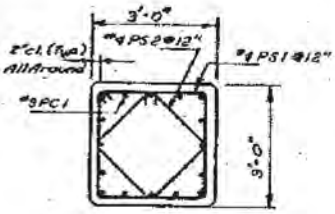


**SECTION J-J**
SCALE 1/2" = 1'-0"

**PIERS**

Rev. 7-21-60 RBJ

REGISTERED PROFESSIONAL ENGINEER NO. 2734 R. B. REDVILLE STATE OF UTAH

DESIGN AND DRAWING BY
WESTERN ENGINEERS, INC. AND
EDWARDS AND KELCEY
CONSULTING ENGINEERS

SUBMITTED BY R. B. Redville CHIEF ENGINEER
UTAH ENGR. LIC. NO. 2169

SHEET 7 OF 11 SHEETS

UTAH STATE ROAD COMMISSION
SALT LAKE CITY, UTAH
BRIDGE DEPARTMENT

**OREM 400 SOUTH OVERPASS**
114'-4" O. TO O.
STA. 662+28.44 I-15-5(91)244
LEHI-PROVO UTAH COUNTY.

DESIGNED BY Y.G. SHEET NOTES
DRAWN BY B.P.
TRACED BY
CHECKED BY L.G.

No. F-16

STRUCTURE 3-E

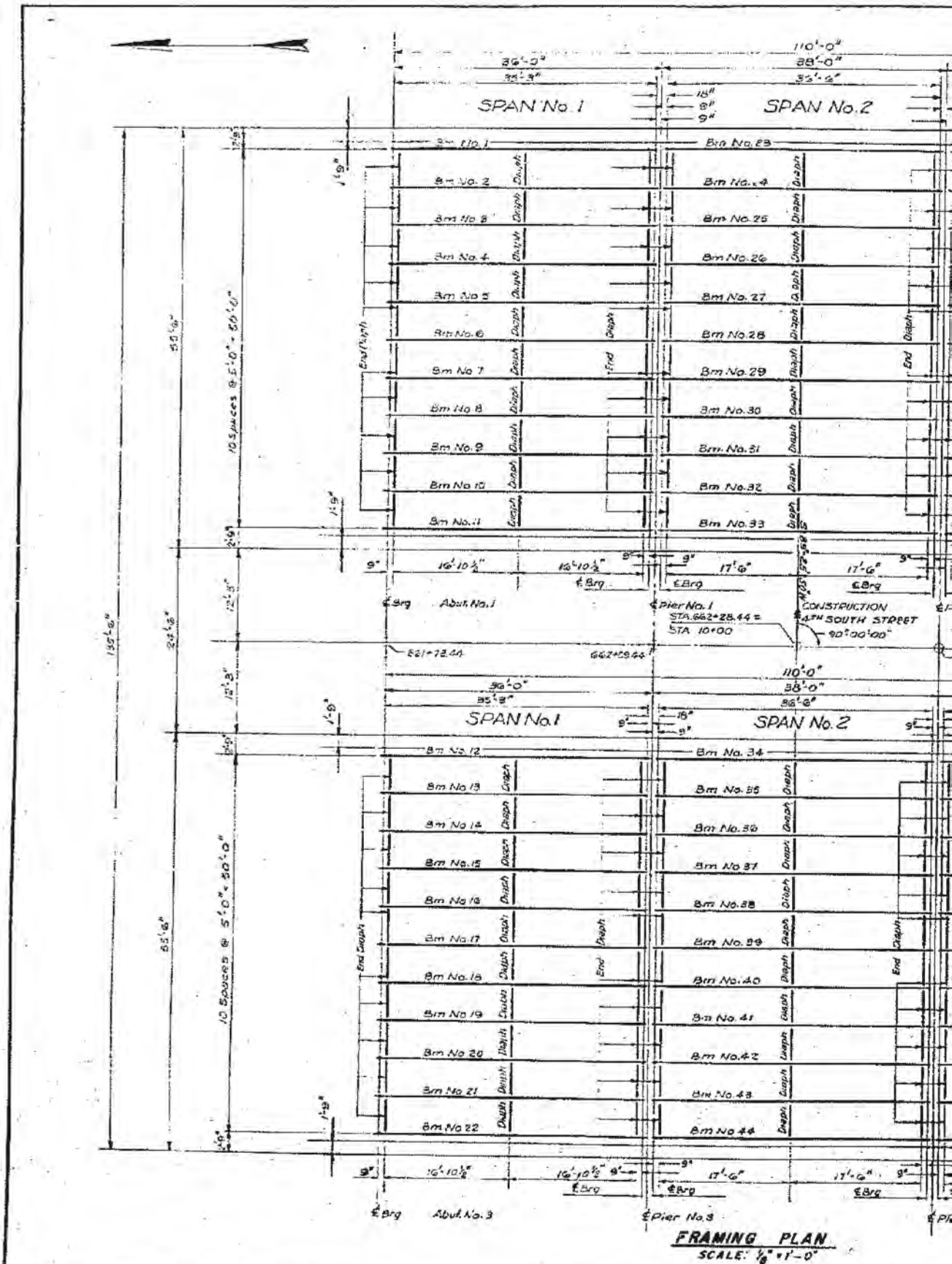


**FRAMING PLAN**
SCALE: 1/8" = 1'-0"

DGN Files IP. PWPadmin\16721\4433.F-16-03.Corunfoodom
02-MAY-2005

| FED. ROAD DIST. NO. | STATE | FED. AID PROJ. NO. | FISCAL YEAR | SHEET NO. | TOTAL SHEETS |
|---|---|---|---|---|---|
| UT | UTAH | I-15-6(9)265 | POST WAR | | |

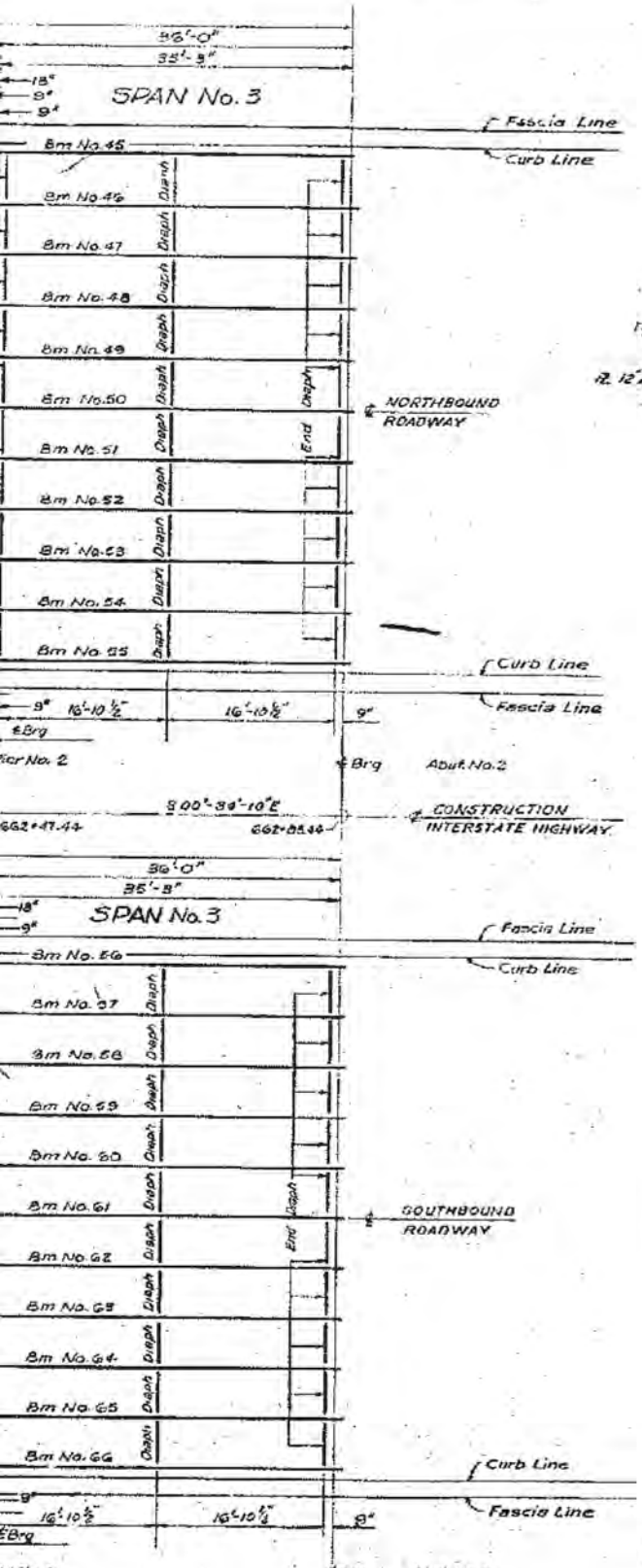


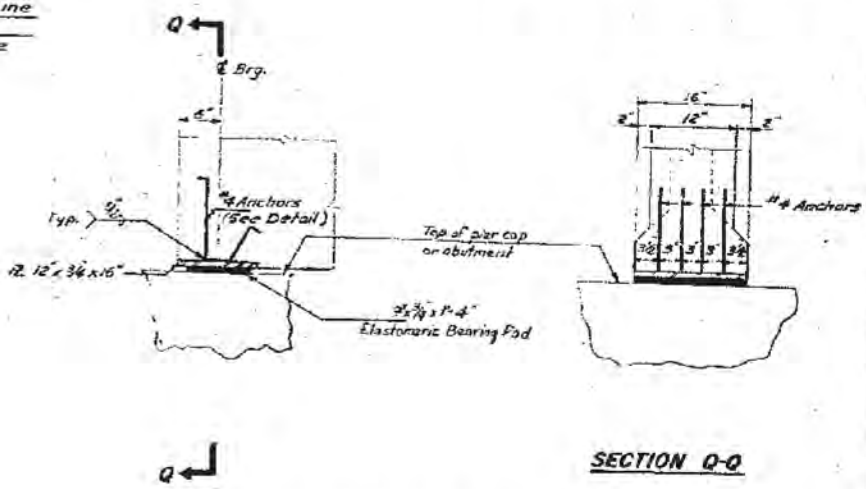


SECTION Q-Q

BEAM BEARING DETAILS

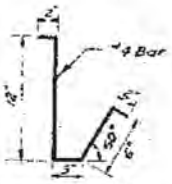


ANCHOR DETAIL
SCALE: 1½"=1'-0"

**FOR INFORMATION ONLY**

NOTE: FOR DIAPHRAGM DETAILS SEE SHEET No. 10 OF 11 SHEETS.

FRAMING PLAN

SHEET 9 OF 11 SHEETS

Rev. 7-21-60 RBJ

REGISTERED PROFESSIONAL ENGINEER NO. 2134 J. R. MENVILLE STATE OF UTAH

DESIGN AND DRAWING BY
WESTERN ENGINEERS, INC. AND
EDWARDS AND KELCEY
CONSULTING ENGINEERS

SUBMITTED BY J. R. Menville CHIEF ENGINEER
UTAH ENGR. LIC. NO. 2134

UTAH STATE ROAD COMMISSION
SALT LAKE CITY, UTAH
BRIDGE DEPARTMENT

OREM 400 SOUTH OVERPASS
114'-4" Q TO Q
STA. 662+28.44 I-15-6(9)265
LEHI-PROVO UTAH COUNTY

DESIGNED BY YG
DRAWN BY N.B.C.
TRACED BY
CHECKED BY YG
DATE AS NOTED
DATE 1-6-61 1960
APPROVED D.L. Sargent
CHIEF BRIDGE ENGINEER

DWG. NO. F-16

STRUCTURE 3-E

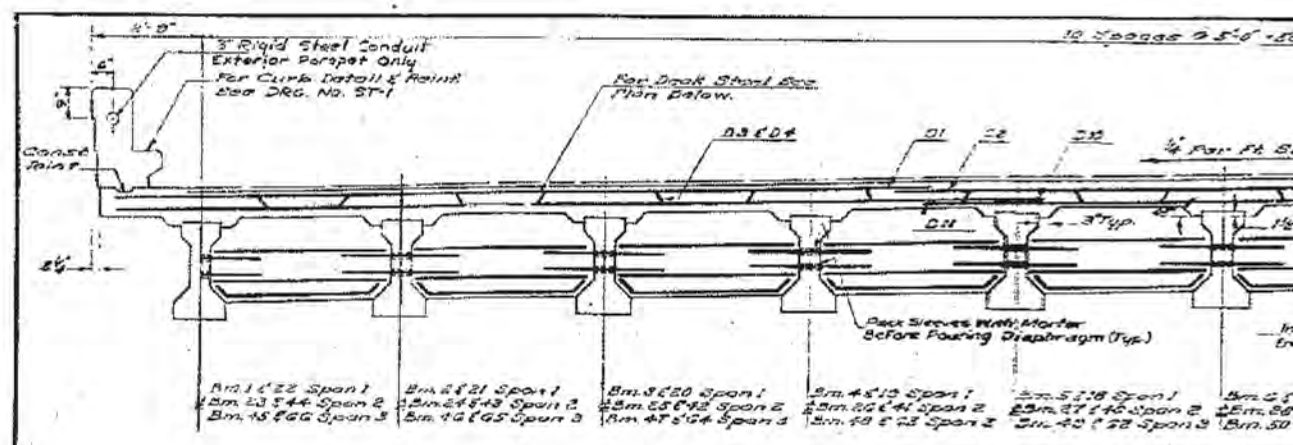


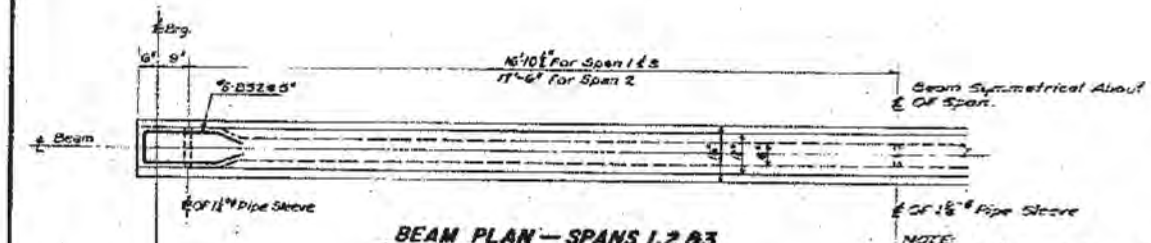


**BEAM PLAN — SPANS 1,2 & 3**

SCALE: ½" = 1'-0"

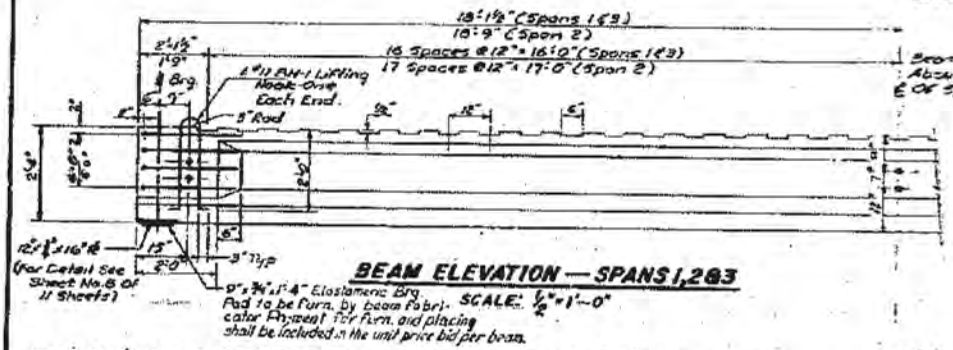


**BEAM ELEVATION — SPANS 1,2 & 3**

SCALE: ½" = 1'-0"

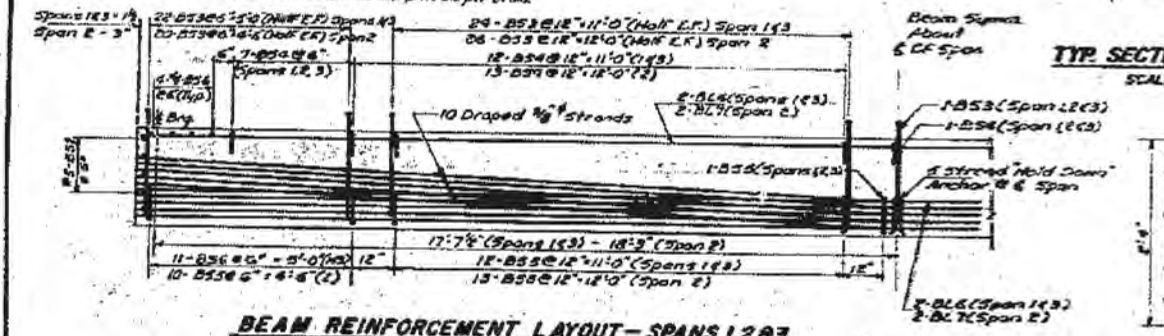


**BEAM REINFORCEMENT LAYOUT — SPANS 1,2 & 3**

SCALE: ½" = 1'-0"

NOTE:
Reinforcement In Beam Above Is For Half The Span. Double To Get Quantity Per Beam.

**TYP. SECTION AT ℄ BRG**

SCALE 1" = 1'-0"

**FOR INFORMATION ONLY**

TYPICAL

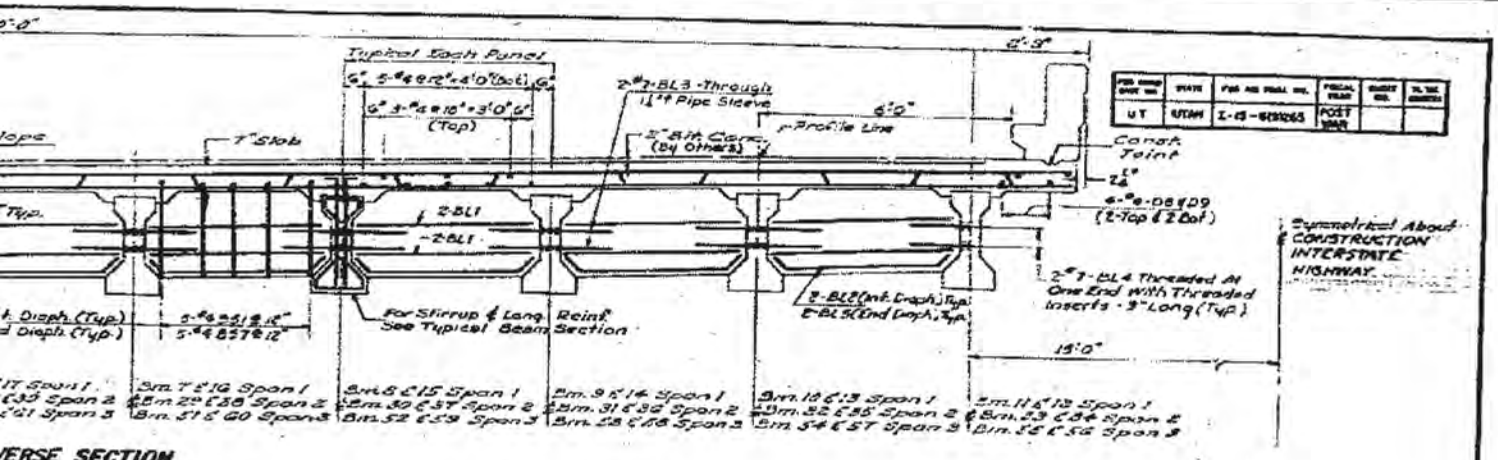


VERSE SECTION
SCALE: 1/2"=1'-0"

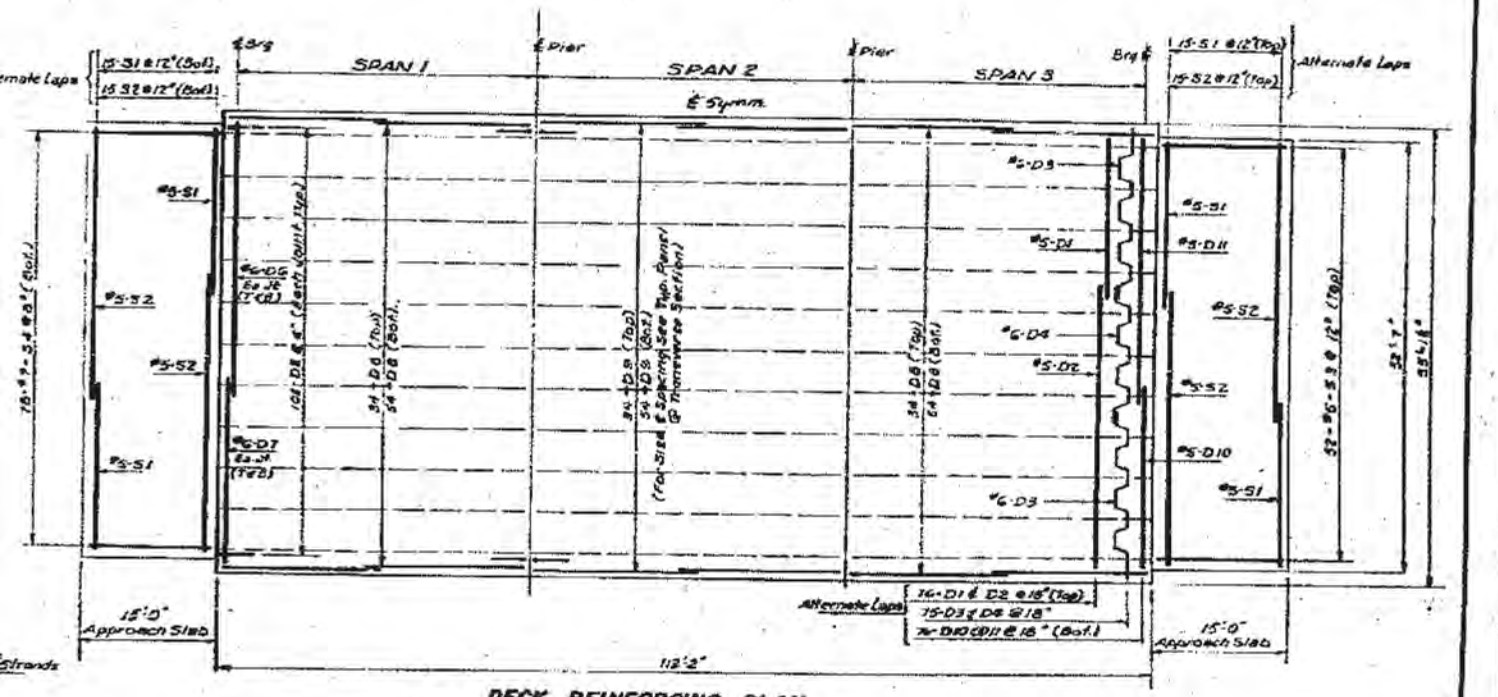


DECK REINFORCING PLAN
SCALE: 1"=10'-0"

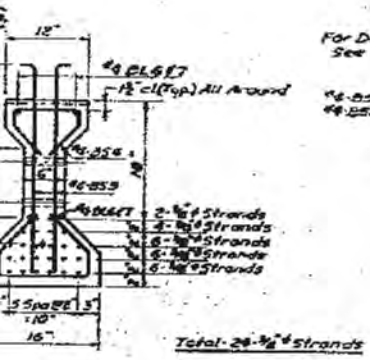


L. BEAM SECTION
SCALE: 1"=1'-0"

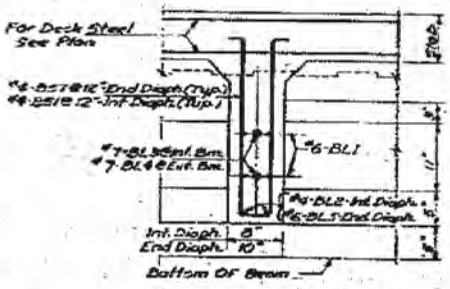


TYP. INT. DIAPHRAGM
END DIAPH. SIMILAR EXCEPT AS NOTED
SCALE: 1"=1'-0"

PRECAST PRESTRESSED BEAM DATA

Ultimate 28 Day Cylinder Strength Of Conc. — 5000 p.s.i
Ultimate Cylinder Strength Of Conc. At Time Of Prestressing. — 4000 p.s.i
Initial Tensioning Per ½"ϕ Strand — 16,000 lbs.
Strands Shall Be Burnt Off ½" Inside Of The End Of The Beam. And Mortar Shall Be Applied To Cover Entire Face Of End Block.

TRANSVERSE SECTION

Rev. 7-21-60 RBJ

SHEET 9 OF 11

UTAH STATE ROAD COMMISSION
SALT LAKE CITY, UTAH

OREM 400 SOUTH OVERPASS
114'-4" O. TO O.
STA. 662+28.44
LEHI-PROVO
I-15-6 (31)248
UTAH COUNTY

DESIGN AND DRAWING BY
WESTERN ENGINEERS, INC. AND
EDWARDS AND KELCEY
CONSULTING ENGINEERS

Chief Engineer
2164

F-16

STRUCTURE 5-E

**FOR INFORMATION ONLY**

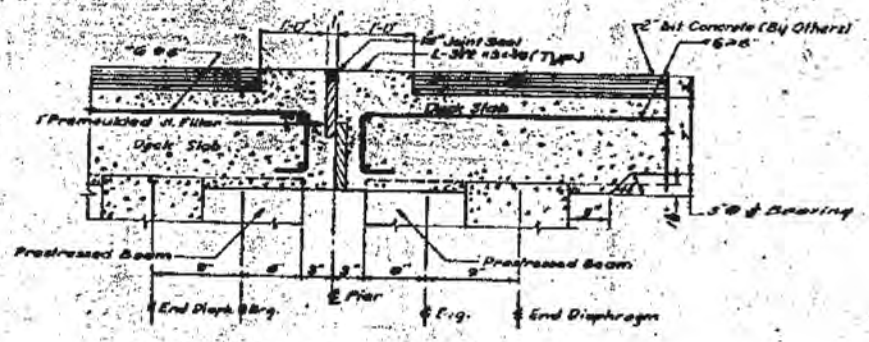


JOINT DETAIL AT PIER

DGN Files\P_PWPhoenix\16721\4433.E-16-10_ForInfoOnly
825-MKY-2885

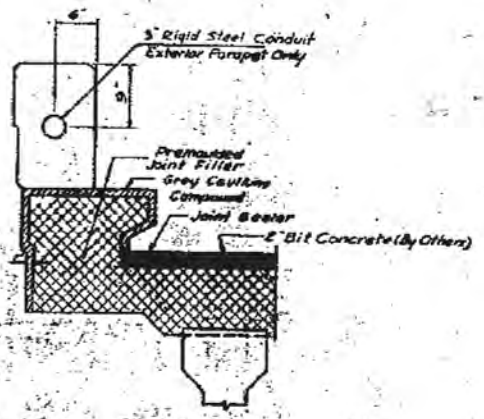


JOINT DETAIL AT PARAPET

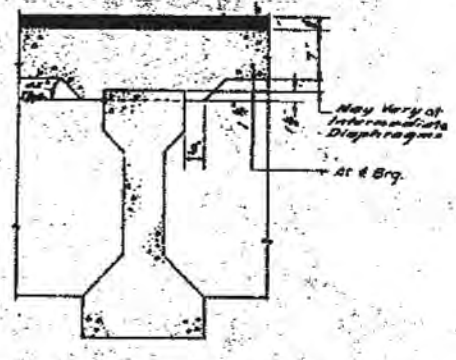


TYPICAL HAUNCH DETAIL

JOINT FILLER DETAILS AT PARAPETS

CONCRETE DETAILS

SHEET 10 OF 11

Rev. 7-21-60 RBJ

DESIGN AND DRAWING BY
WESTERN ENGINEERS, INC. AND
EDWARDS AND KELCEY
CONSULTING ENGINEERS

REGISTERED PROFESSIONAL ENGINEER
NO. 2154
L. R. HENTZELL
STATE OF UTAH

UTAH STATE ROAD COMMISSION
SALT LAKE CITY, UTAH

OREM 400 SOUTH
OVERPASS
114'-4" O. TO O.
STA. 662+28.46
LEHI-PROVO
UTAH COUNTY

STRUCTURE

# BILL OF REINFORCING

| MARK | SIZE | LGTH. | NO. REQ. | TOTAL LENGTH | TYPE | A | B | C | D | E | F | G | H | J | K | O |
|---|---|---|---|---|---|---|---|---|---|---|---|---|---|---|---|---|
| **ABUTMENT REINFORCEMENT** | | | | | | | | | | | | | | | | |
| AD 1 | 5 | 5'-0" | 240 | 1200'-0" | 1 | | 12" | 4'-2" | | | | | | | | |
| 2 | 5 | 4'-0" | 208 | 832'-0" | 1 | | 1'-6" | [illegible] | | | | | | | | |
| 3 | 5 | 3'-0" | 104 | 312'-0" | 1 | | | | | | | | | | | |
| AF 1 | 5 | 5'-0" | 354 | 2125'-0" | 1 | | | | | | | | | | | |
| 2 | 5 | 17'-4" | 90 | 1560'-0" | 1 | | | | | | | | | | | |
| 3 | 5 | 31'-6" | 90 | 2835'-0" | 1 | | | | | | | | | | | |
| 4 | 5 | 5'-0" | 16 | 80'-0" | 1 | | | | | | | | | | | |
| AS 1 | 5 | 3'-6" | 152 | 532'-0" | 1 | 1-GB X 3'-6" X 1.043 = 248.23 lbs. | | | | | | | | | | |
| 2 | | 24'-6" | 24 | 588'-0" | 1 | | | | | | | | | | | |
| 3 | | 29'-6" | 24 | 708'-0" | 1 | | | | | | | | | | | |
| 4 | | 9'-3" | 220 | 2035'-0" | 4 | | 18" | 2'-9" | | | | | | | | |
| 5 | | 5'-0" | 38 | 190'-0" | 1 | | | | | | | | | | | |
| 6 | | 4'-6" | 38 | 171'-0" | | | | | | | | | | | | |
| 7 | | 3'-6" | 38 | 133'-0" | | | | | | | | | | | | |
| 8 | 5 | 3'-0" | 38 | 114'-0" | | | | | | | | | | | | |
| 9 | 6 | 29'-3" | 12 | 351'-0" | | | | | | | | | | | | |
| 10 | 6 | 24'-6" | 12 | 294'-0" | | | | | | | | | | | | |
| 11 | 5 | 7'-0" | 38 | 266'-0" | | | | | | | | | | | | |
| 12 | | 7'-6" | 38 | 285'-0" | | | | | | | | | | | | |
| 13 | | 6'-6" | 38 | 247'-0" | | | | | | | | | | | | |
| 14 | | 6'-0" | 38 | 228'-0" | | | | | | | | | | | | |
| 15 | | 28'-3" | 6 | 169'-6" | | | | | | | | | | | | |
| 16 | | 23'-6" | 16 | 376'-0" | | | | | | | | | | | | |
| 17 | | 30'-0" | 12 | 360'-0" | 4 | | 15" | 2'-3" | | | | | | | | |
| 18 | 6 | 26'-3" | 12 | 316'-0" | 4 | | 18" | 2'-3" | | | | | | | | |
| **WINGWALL REINFORCEMENT** | | | | | | | | | | | | | | | | |
| AW 1 | 5 | 13'-8" | 24 | 330'-0" | 1 | | | | | | | | | | | |
| 2 | | 16'-7" | 32 | 532'-0" | | | | | | | | | | | | |
| 3 | | 19'-0" | 32 | 608'-0" | | | | | | | | | | | | |
| 4 | | 9'-7" | 42 | 403'-6" | | | | | | | | | | | | |
| 5 | | 8'-0" | 42 | 336'-0" | | | | | | | | | | | | |
| 6 | | 4'-0" | 32 | 128'-0" | | | | | | | | | | | | |
| 7 | | 8'-3" | 42 | 346'-6" | | | | | | | | | | | | |
| 8 | | 7'-3" | 42 | 304'-6" | 1 | | | | | | | | | | | |
| 9 | 5 | 13'-3" | 24 | 366'-0" | 4 | | 15" | 13'-5" | | | | | | | | |
| **APPROACH SLAB REINFORCEMENT** | | | | | | | | | | | | | | | | |
| S1 | 5 | 20'-0" | 120 | 2400'-0" | 1 | | | | | | | | | | | |
| 2 | 5 | 20'-0" | 180 | 3600'-0" | 1 | | | | | | | | | | | |
| 3 | 5 | 14'-8" | 264 | 3874'-0" | 1 | | | | | | | | | | | |
| 4 | 7 | 14'-6" | 312 | 4524'-0" | 1 | | | | | | | | | | | |
| **DECK SLAB REINFORCEMENT** | | | | | | | | | | | | | | | | |
| D 1 | 5 | 21'-0" | 152 | 3192'-0" | 1 | | | | | | | | | | | |
| 2 | 5 | 22'-0" | 152 | 3344'-0" | 1 | | | | | | | | | | | |
| 3 | 6 | 22'-2" | 300 | 6660'-0" | 23 | | 3'-4" | 7" | 0'-3" | 1'-1" | 3 | 3'-0" | 5" | | 5" | |
| 4 | 6 | 18'-3" | 170 | 3105'-0" | 27 | | | 7" | 0'-3" | 1'-11" | 3 | 2'-0" | 5" | | 5" | |
| 5 | 6 | 4'-0" | 308 | 1232'-0" | 23 | 9" | 8" | 2'-5" | | | | | | | | |
| 6 | 6 | 32'-9" | 24 | 786'-0" | 1 | | | | | | | | | | | |
| 7 | 6 | 23'-0" | 24 | 552'-0" | 1 | | | | | | | | | | | |
| 8 | 4 | 10'-8" | 704 | 7523'-0" | 1 | | | | | | | | | | | |
| 9 | 4 | 19'-8" | 352 | 6926'-0" | 1 | | | | | | | | | | | |
| 10 | 5 | 28'-0" | 152 | 4256'-0" | 1 | | | | | | | | | | | |
| 11 | 5 | 28'-9" | 152 | 4376'-0" | 1 | | | | | | | | | | | |

| MARK | SIZE | LGTH. | NO. REQ. | TOTAL LENGTH | TYPE | A | B | C | D | E |
|---|---|---|---|---|---|---|---|---|---|---|
| **PIER REINFORCEMENT** | | | | | | | | | | |
| PS 1 | 9 | 22'-3" | 12 | 267'-0" | 1 | | | | | |
| 2 | 9 | 10'-3" | 16 | 164'-0" | 1 | | | | | |
| 3 | 5 | 12'-0" | 40 | 480'-0" | 2 | 18" | 3'-0" | 5" | 2'-0" | |
| 4 | 9 | 21'-7" | 20 | 431'-2" | 1 | | | | | |
| 5 | 5 | 14'-2" | 10 | 141'-2" | 1 | | | | | |
| 6 | 2 | 14'-0" | 40 | 560'-0" | 1 | | | | | |
| 7 | 9 | 12'-0" | 12 | 144'-0" | 1 | | | | | |
| 8 | 5 | 27'-3" | 32 | 872'-0" | 1 | | | | | |
| PC 1 | 9 | 18'-6" | 120 | 2220'-0" | 1 | | | | | |
| PD 1 | 9 | 7'-3" | 152 | 1102'-0" | 4 | | 12" | 6'-3" | | |
| PF 1 | 11 | 35'-3" | 43 | 1516'-0" | 1 | | | | | |
| 2 | 11 | 14'-0" | 33 | 462'-0" | 1 | | | | | |
| 3 | 11 | 3'-6" | 164 | 574'-0" | 1 | | | | | |
| 4 | 9 | 23'-0" | 80 | 1840'-0" | 1 | | | | | |
| 5 | 5 | 8'-7" | 180 | 1620'-0" | | | | | | |
| PS 1 | 9 | 11'-2" | 180 | 2010'-0" | 15 | 5" | 2'-8" | 2'-8" | 2'-8" | 2'-8" |
| 2 | 6 | 9'-2" | 92 | 1530'-0" | 1 | | 1'-11" | 1'-11" | 1'-11" | 1'-11" |
| 3 | | 11'-6" | 200 | 2760'-0" | | | 1'-8" | 3'-8" | 1'-8" | 3'-8" |
| 4 | 5 | 12'-2" | 16 | 179'-8" | | | 1'-9" | 3'-6" | 1'-8" | 3'-6" |
| 5 | 5 | 18'-8" | 16 | 270'-8" | | | | 3'-3" | | 3'-3" |
| 6 | 5 | 10'-2" | 16 | 152'-8" | 1 | | | 3'-0" | | 3'-0" |
| 7 | 5 | 9'-8" | 16 | 154'-8" | 12 | | | 2'-9" | | 2'-9" |
| 8 | 6 | 9'-6" | 16 | 146'-8" | 12 | 5" | 1'-8" | 2'-6" | 1'-8" | 2'-6" |
| **CURB & PARAPET REINFORCEMENT** | | | | | | | | | | |
| DC 1 | 5 | 9'-10" | 360 | 2925'-0" | 24 | 8" | [illegible] | 2'-7" | 12" | 12" |
| 2 | 5 | 5'-1" | 448 | 2281'-4" | 20 | 1'-3½" | 1'-3½" | | | |
| 3 | 5 | 6'-0" | 88 | 528'-0" | 28 | | 2'-0" | 8" | 2'-6" | 1" |
| 4 | 5 | 13'-0" | 72 | 936'-0" | 1 | | | | | |
| 5 | 4 | 19'-6" | 112 | 2184'-0" | 1 | | | | | |
| 6 | 4 | 19'-8" | 56 | 1101'-0" | 1 | | | | | |

FOR INFO

DGN Files IP PWPrints\16721\4433.E-16-11.ForInfauden
82-MAY-2005

STEEL

| F | G | H | J | K | O |
|---|---|---|---|---|---|

| MARK | SIZE | LGTH. | NO. REQ. | TOTAL LENGTH | TYPE | A | B | C | D | E | F | G | H | J | K | O |
|---|---|---|---|---|---|---|---|---|---|---|---|---|---|---|---|---|
| PRESTRESSED CONCRETE BEAM REINFORCEMENT | | | | | | | | | | | | | | | | |
| B4 | 11 | 5'-3½" | 198 | 700'-0" | 29 | 3" | 2'-3" | 2'-0" | 3" | 3" | | | | | | |
| B5 | 5 | 5'-6 | 328 | 2904'-0" | 31 | 1'-10" | 8" | 1'-10" | 7" | 7" | | | | | | |
| " | 2 | 2'-13 | 6102 | 12576'-0" | 2 | | | 2" | 0'-7" | | | | | | | |
| " | 4 | 3'-2" | 7014 | 5673'-2" | 31 | 2½" | 3" | 2½" | 2" | 3" | | | | | | |
| " | 2 | 3'-1" | 3102 | 9563'-6" | 31 | 3½" | 1'-1" | 3½" | 2½" | 3½" | | | | | | |
| B6 | 2 | 3'-9" | 5138 | 2568'-0" | 31 | | | 2'-0" | 9" | 2'-0" | | | | | | |
| B6 | 2 | 9'-2" | 282 | 688'-0" | 1 | | | | | | | | | | | |
| " | 2 | 12'-5" | 176 | 3432'-0" | 1 | | | | | | | | | | | |
| DIAPHRAGM REINFORCEMENT | | | | | | | | | | | | | | | | |
| B51 | 2 | 5'-3" | 300 | 1575'-0" | 13 | | | 3" | 1'-2" | 5" | 2'-2" | 3" | | | | |
| " | 2 | 2'-5" | 600 | 3250'-0" | 13 | | | 3" | 2'-8" | 7" | 2'-5" | 3" | | | | |
| B61 | 6 | 2'-3" | 720 | 3660'-0" | 1 | | | | | | | | | | | |
| 3 | 4 | 4'-9 | 183 | 870'-0" | 30 | 7½" | 3'-6" | 7½" | | | | | | | | |
| 3 | 7 | 3'-0" | 224 | 672'-0" | 1 | | | | | | | | | | | |
| 3 | 7 | 1'-6" | 72 | 108'-0" | | | | | | | | | | | | |
| 3 | 6 | 3'-2" | 240 | 760'-0" | 13 | 4" | 3'-6 | 4" | | | | | | | | |

* REINFORCING NOT INCLUDED IN ESTIMATE - TO BE FURNISHED BY BEAM FABRICATOR

| | | | | | |
|---|---|---|---|---|---|
| 33,067'-1" | of | No. 6 bars | @ | .668 #/ft | = 22,525.21 lbs. |
| 5848'-9" | " | No. 5 " | @ | 1.043 " | = 6,744.11 " |
| 25,542'-6" | " | No. 6 " | @ | 1.502 " | = 38,810.78 " |
| 5,601'-0" | " | No. 7 " | @ | 2.044 " | = 11,454.58 " |
| 2,932'-0" | " | No. 8 " | @ | 2.670 " | = 7,828.48 " |
| 8,693'-0" | " | No. 9 " | @ | 3.400 " | = 29,556.20 " |
| 2,262'-0" | " | No. 11 " | @ | 5.43 " | = 11,922.37 " |
| | | | | TOTAL | = 171,845.76 lb. |
| | | | | | 248.27 lbs. |
| | | | | | 172,194.22 lbs. |

| NO. ROAD DIST. NO. | STATE | FED. AID PROJ. NO. | FISCAL YEAR | SHEET NO. | TOTAL SHEETS |
|---|---|---|---|---|---|
| 07 | UTAH | I-15-6(91)265 | POST WAR | | |

BAR TYPES

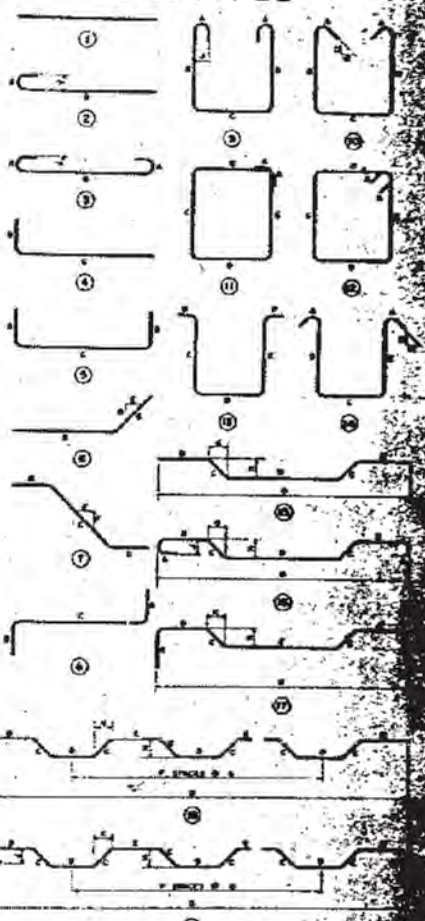

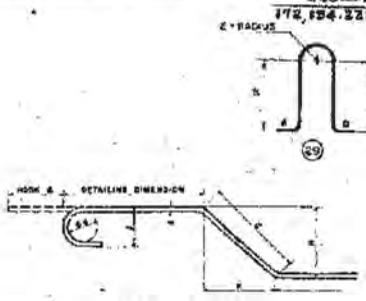


HOOK DETAIL

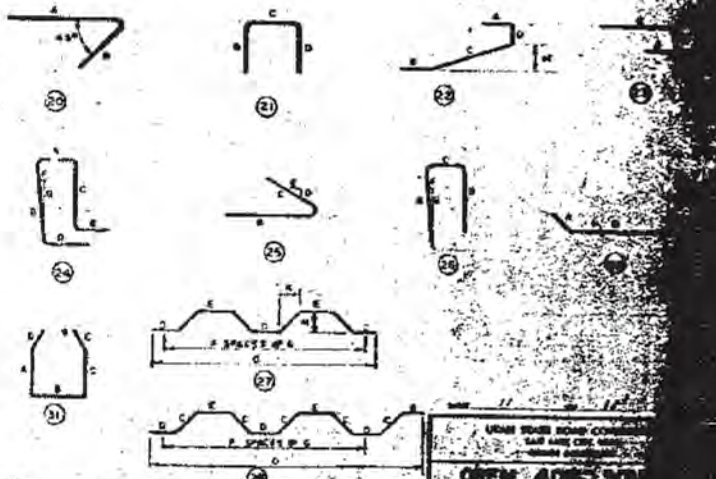

GENERAL NOTES

1. All placing drawings, detailing, and fabrication shall be in accordance with the "Manual of Standard Practice for Detailing Reinforced Concrete Structures (ACI 315-57)".
2. All dimensions shown for bar bending details are out-to-out of bars.

Rev. 7-21-60 RBJ

DESIGN AND DRAWING BY
WESTERN ENGINEERS, INC. AND
EDWARDS AND RELCEY
CONSULTING ENGINEERS

SUBMITTED BY: [signature] Chief Engineer

UTAH ENGR. LIC. NO. 2165

UTAH STATE ROAD COMMISSION
SALT LAKE CITY, UTAH

OREM 400 S. TO
OVERPASS
114'-3" x 40'-0"

STA. 552+78.49
LEAD-IN ROAD

DESIGNED BY: T.E.M.
DRAWN BY: R.V.
CHECKED BY: T.E.M.

STRUCTURE

ORMATION ONLY

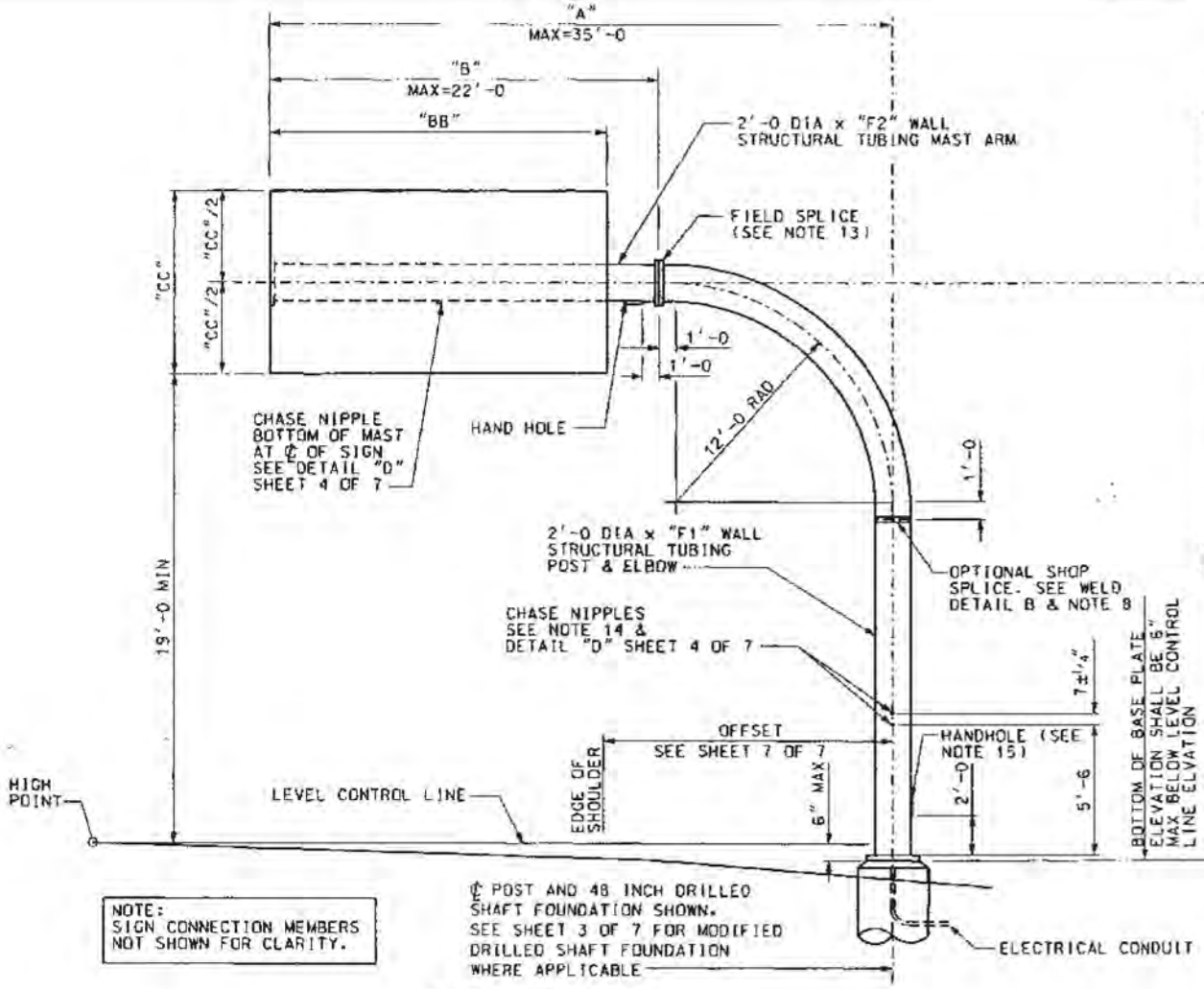


NOTE:
SIGN CONNECTION MEMBERS
NOT SHOWN FOR CLARITY.

## ELEVATION VIEW

LOOKING AHEAD IN THE DIRECTION OF TRAFFIC
(SHOULDER LOCATION SHOWN. MEDIAN LOCATION OPPOSITE)

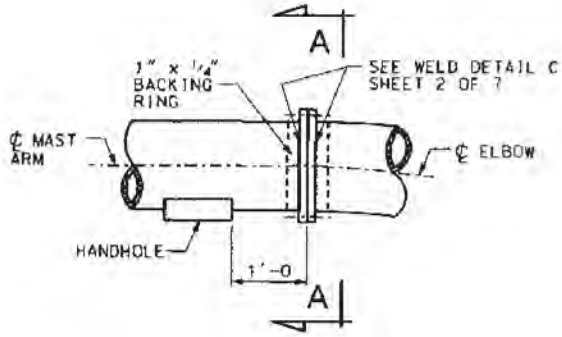


## FIELD SPLICE

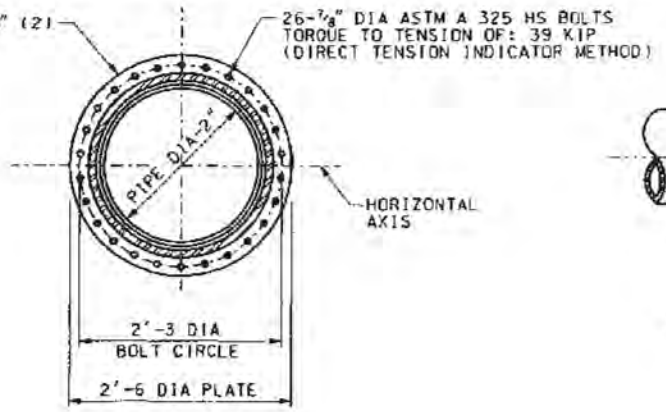


## SECTION A-A

NOTE:
ALL DIMENSIONS ARE GIVEN IN FEET
OR INCHES UNLESS OTHERWISE NOTED.
SEE SHEETS 6 OF 7 AND 7 OF 7
FOR DIMENSIONS GIVEN BY LETTERS.



## SH

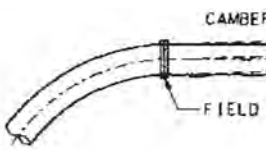


## CAMBER DI

## CAMBER NOTES:

1. THE CAMBER SHOWN IS REQUIRED TO BE BUILT INTO
ERECTED SO THAT CAMBER IS PROVIDED ABOVE THE

2. THE CALCULATED CAMBER PROVIDES FOR DEFLECTION
CANTILEVER STRUCTURE AND DEAD LOADS DUE TO S

## DEX OF SHEETS


ELEVATION & STRUCTURE DETAILS
FOUNDATION & STRUCTURE DETAILS
MEDIAN FOUNDATION DETAILS
SIGN CONNECTION DETAILS
SIGN BRACING DETAILS
SIGN LIGHTING DETAILS
SIGN SUPPORT SCHEDULE


## NOTES:

1. ALL CONSTRUCTION SHALL CONFORM TO UTAH DEPARTMENT OF TRANSPORTATION STANDARD SPECIFICATIONS FOR ROAD AND BRIDGE CONSTRUCTION, LATEST EDITION.
2. DESIGN SPECIFICATIONS: AASHTO STANDARD SPECIFICATIONS FOR STRUCTURAL SUPPORTS FOR HIGHWAY SIGNS, LUMINARIES AND TRAFFIC SIGNALS, 4TH EDITION.
3. ALL REINFORCING SHALL BE COATED, DEFORMED BILLET-STEEL BARS CONFORMING TO AASHTO M 284 OR M 111 AND M 31, GRADE 60.
4. USE STRUCTURAL TUBING LOW CARBON STEEL CONFORMING TO ASTM A 53 GRADE B AND UDOT STANDARD SPECIFICATIONS FOR VMS SUPPORT STRUCTURES, NO. 13557. ALL TUBULAR STEEL FRAME PIPE SHALL BE WELDED OR SEAMLESS STEEL PIPE.
5. THE FABRICATION SHOP SHALL PROVIDE SHOP DRAWINGS IN ACCORDANCE WITH ALL CURRENT UDOT STANDARD SPECIFICATIONS.
6. ALL OTHER STRUCTURAL STEEL SHALL CONFORM TO AASHTO M 270 (ASTM A 709), GRADE 36 AND UDOT STANDARD SPECIFICATIONS FOR VMS SUPPORT STRUCTURES NO. 13557.
7. WELDING DESIGN AND FABRICATION SHALL BE IN ACCORDANCE WITH ANSI / AASHTO / AWS D 1.5 SPECIFICATIONS. ULTRASONIC TESTING SHALL BE USED FOR THE COLUMN TO BASE PLATE WELDS (WELD DETAIL A) AND THE FIELD SPLICE WELDS (WELD DETAIL C).
8. THE OPTIONAL SHOP SPLICE MAY NOT BE USED WHEN THE SPLICE LOCATION IS LESS THAN 7'-0 ABOVE THE TOP OF THE BASE PLATE.
9. ALL FOUNDATION CONCRETE SHALL BE CLASS AA(AE).
10. ANCHOR BOLTS SHALL CONFORM TO AASHTO M 270 GRADE 36 (ASTM A 307), WITH AN 8" HOOK AS SHOWN. ANCHOR BOLTS SHALL NOT BE WELDED TO REINFORCING STEEL. THE NUTS AND WASHERS ACCOMPANYING THE ANCHOR BOLTS SHALL CONFORM TO ASTM A 563 AND F 436 RESPECTIVELY. GALVANIZE NUTS, WASHERS AND ANCHOR BOLTS IN ACCORDANCE WITH AASHTO M 232 (ASTM A 153). ALL GALVANIZED STEEL THREADS ARE TO BE FREE FROM DEFECTS ALLOWING NUTS TO BE FREE RUNNING FOR THE ENTIRE LENGTH OF THE THREADS.
11. DURING SIGN ERECTION THE POST SHALL BE RAKED AS NECESSARY WITH THE USE OF LEVELING NUTS TO MAKE THE SIGN PANEL LEVEL. AT THE FINAL POSITION ALL TOP AND BOTTOM ANCHOR NUTS SHALL BE WRENCH TIGHTENED AGAINST THE BASE PLATE.
12. IF THE TUBULAR CANTILEVER STRUCTURE IS ERECTED AS ONE UNIT THE PIPE ASSEMBLY SHALL BE ADEQUATELY SUSPENDED TO AVOID DISTORTIONS.
13. THE FIELD SPLICE SURFACES SHALL BE IN FULL CONTACT WITHOUT GAPS PRIOR TO THE BOLTS BEING SNUG TIGHTENED AND FULLY TENSIONED. THE CONTACT SURFACE IS THE AREA DEFINED BY A 1 3/8" RADIUS AROUND EACH BOLT.
14. DRILL AND TAP FOR 1 1/2" CHASE NIPPLES AND PLUG WITH RECESSED PIPE PLUGS. PLACE PERPENDICULAR TO HORIZONTAL SIGN PANEL AXIS AND OPPOSITE FROM APPROACHING TRAFFIC. FOR CANTILEVER STRUCTURES LOCATED IN THE MEDIAN PLACE CHASE NIPPLES PARALLEL TO MEDIAN.
15. FOR CANTILEVER STRUCTURES LOCATED IN THE MEDIAN THE HANDHOLE SHALL BE PLACED INLINE WITH THE CHASE NIPPLES. FOR SHOULDER LOCATIONS PLACE THE HANDHOLE ON OPPOSITE SIDE OF THE TRAVEL WAY.
16. DRILLED SHAFT LOCATIONS AND TOP OF DRILLED SHAFT ELEVATIONS SHALL BE FIELD VERIFIED BY THE CONTRACTOR PRIOR TO THE FABRICATION OF THE POSTS.
17. DIMENSIONS SHALL NOT BE SCALED FROM DRAWINGS.
18. SEE ROADWAY AND SIGNING & STRIPING SHEETS FOR ADDITIOINAL INFORMATION NOT SHOWN ON STRUCTURAL DRAWINGS.

LICENSED PROFESSIONAL ENGINEER
No. 4851398
Brian Paul Davis
2/9/05
STATE OF UTAH

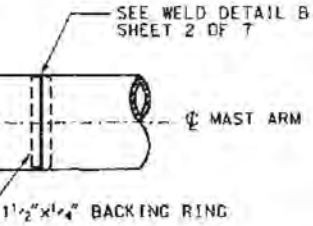


### OP SPLICE

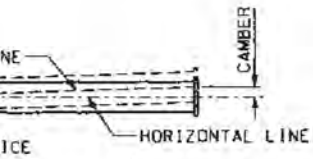


### AGRAM

THE MAST ARM. MEMBERS SHALL BE HORIZONTAL LINE THRU THE FIELD SPLICE.

S DUE TO DEAD LOADS OF THE TUBULAR GN PANELS AND ATTACHMENTS.

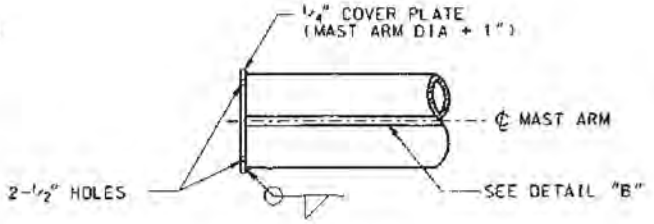


MAST ARM END DETAIL

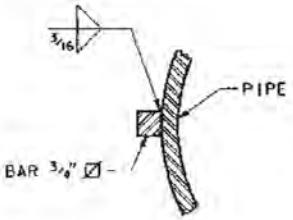


DETAIL "B"

**FOR INFORMATION ONLY**

## QUANTITIES

| ITEM | ESTIM. | UNIT | AS CONST. |
|---|---|---|---|
| 24 INCH CANTILEVER SIGN STRUCTURE G-308 | 4 | EACH | |
| 48 INCH DRILLED SHAFT FOUNDATION | 4 | EACH | |
| 48 INCH MODIFIED DRILLED SHAFT FOUNDATION | - | EACH | |

| NO. | DATE | BY | REMARKS |
|---|---|---|---|
| | | | |

REVISIONS

UTAH DEPARTMENT OF TRANSPORTATION
SALT LAKE CITY, UTAH
STRUCTURES DIVISION

DESIGN JML 02/05 CHECK DRS 02/05
DRAWN WJP 02/05 CHECK DRS 02/05
QUANT. JML 02/05 CHECK BPD 02/05

APPROVAL RECOMM. 2/09/05 DATE SENIOR DESIGN ENGR.
APPROVED FOR USE BY UDOT DATE UDOT BRIDGE ENGR.

I-15 UTAH CO. LINE TO 10600 SO.
CANTILEVER SIGN STRUCTURE
ELEVATION & STRUCTURE DETAILS

PROJECT NUMBER SP-15-7(167)288

SALT LAKE
COUNTY

G-308
DRG. NO.

SHT. 1 OF 7

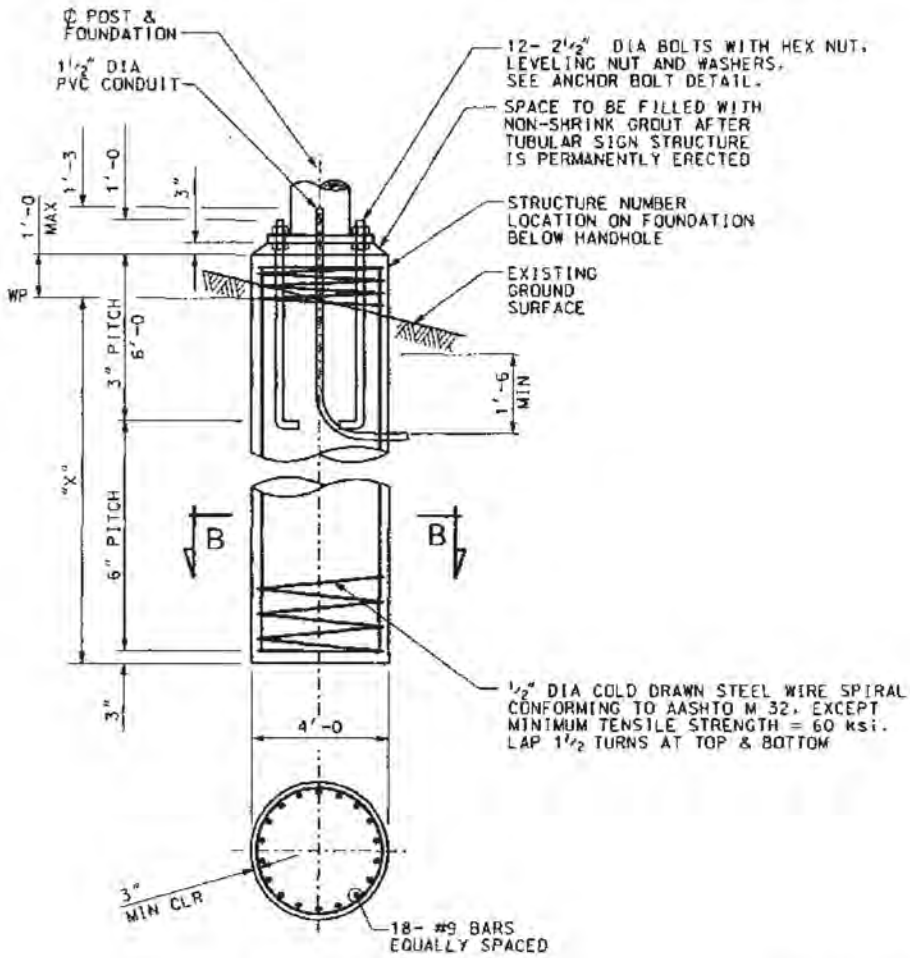


SECTION B-B

DRILLED SHAFT DETAILS

(SHOULDER LOCATIONS)

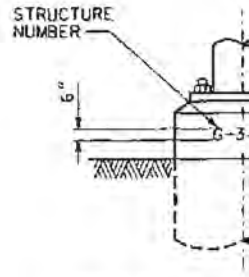


STRUCTURE NU

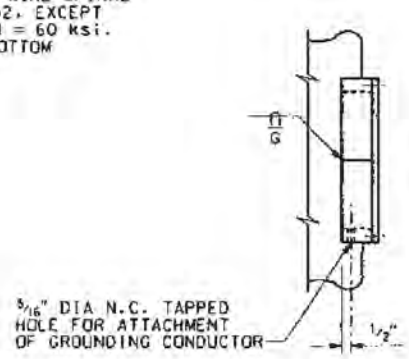


HANDHOLE & COVE

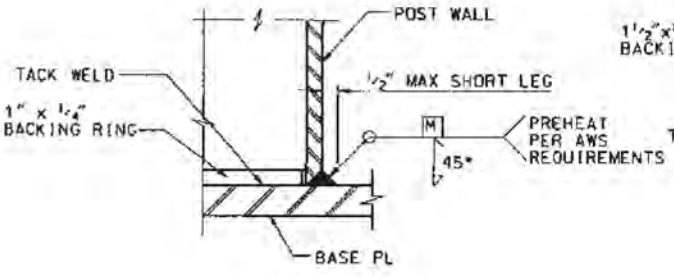


WELD DETAIL A

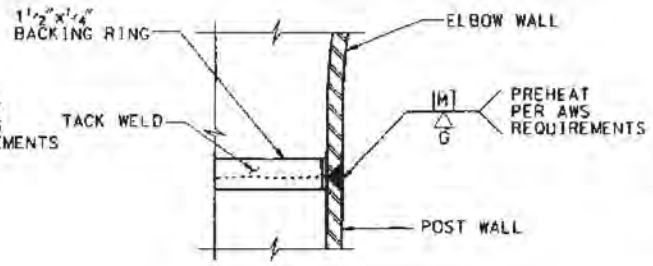


WELD DETAIL B

S
T

DGN Files: PW\Pedros\16724\4433-g-086-82_FoundFolder
m:\16244\3875_03\sheet_files\structures\new_signs\font_Sign_Support.dgn
02-MAY-2006
2/9/2006

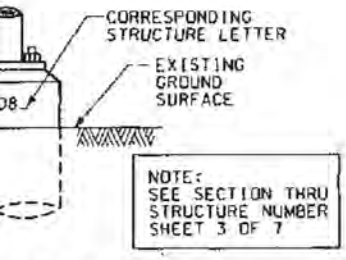


MBER DETAIL

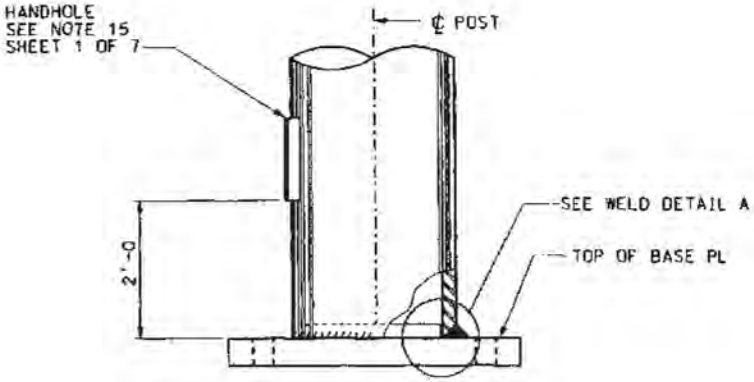


POST BASE ELEVATION

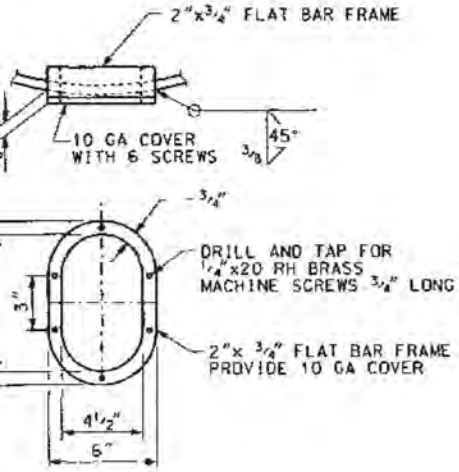


R DETAILS

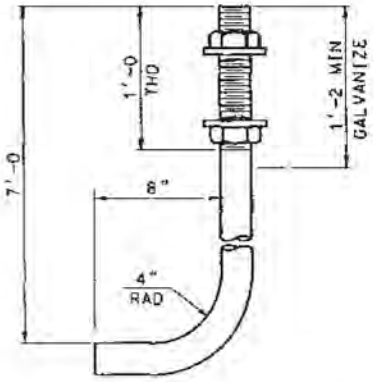


ANCHOR BOLT DETAIL

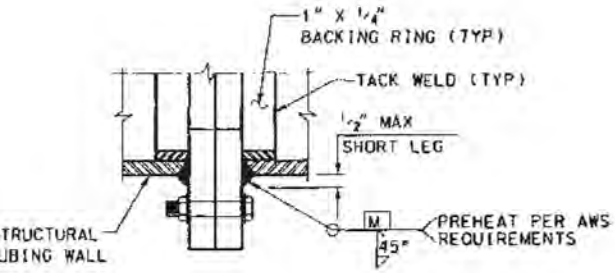


WELD DETAIL C

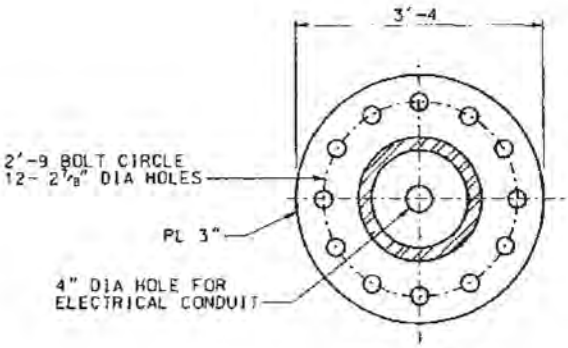


BASE PLATE

**FOR INFORMATION ONLY**

REVISIONS

| NO. | DATE | BY | REMARKS |
|---|---|---|---|

UTAH DEPARTMENT OF TRANSPORTATION
SALT LAKE CITY, UTAH
STRUCTURES DIVISION

DESIGN JML 02/05 CHECK DRS 02/05
DRAWN WJP 02/05 CHECK DRS 02/05
QUANT. JML 02/05 CHECK BPD 02/05

APPROVAL RECOMM. 2/09/05 DATE SENIOR DESIGN ENGR.
APPROVED FOR USE BY UDOT DATE UDOT BRIDGE ENGR.

I-15 UTAH CO. LINE TO 10600 SO.
CANTILEVER SUPPORT STRUCTURE
FOUNDATION & STRUCTURE DETAILS
PROJECT NUMBER SP-15-7(167)288

SALT LAKE
COUNTY

G-308
DRG. NO.

SHT. 2 OF 7

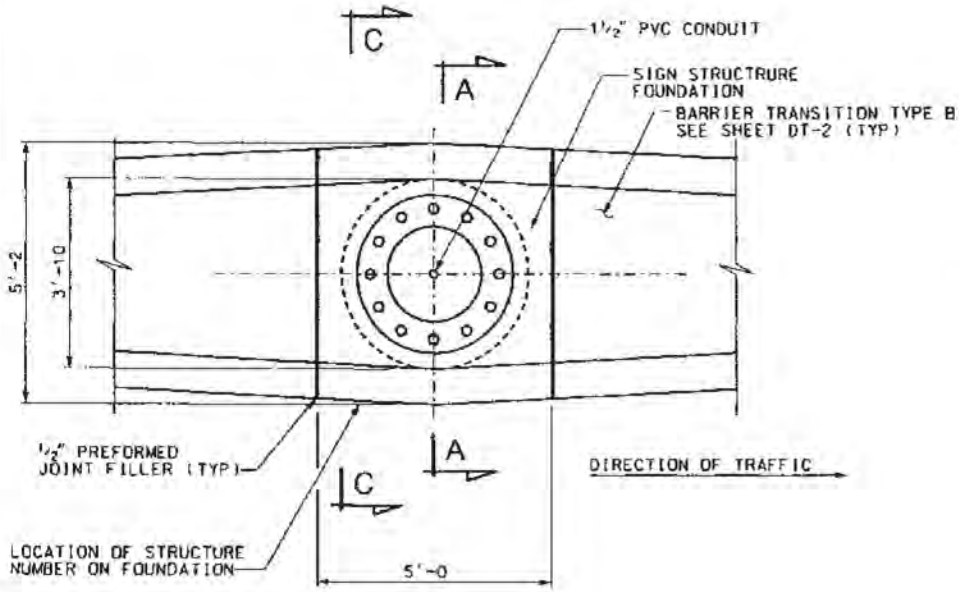


PLAN

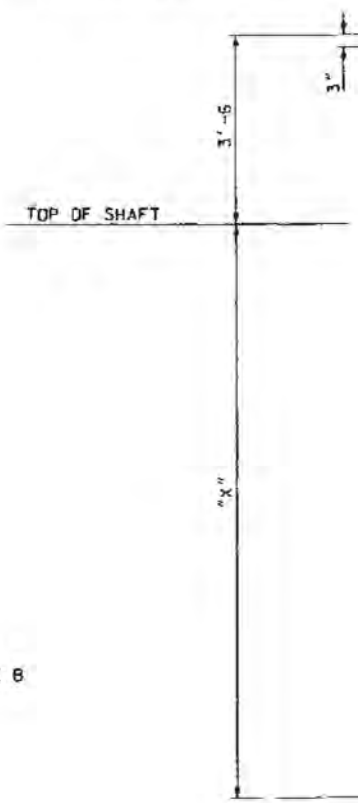


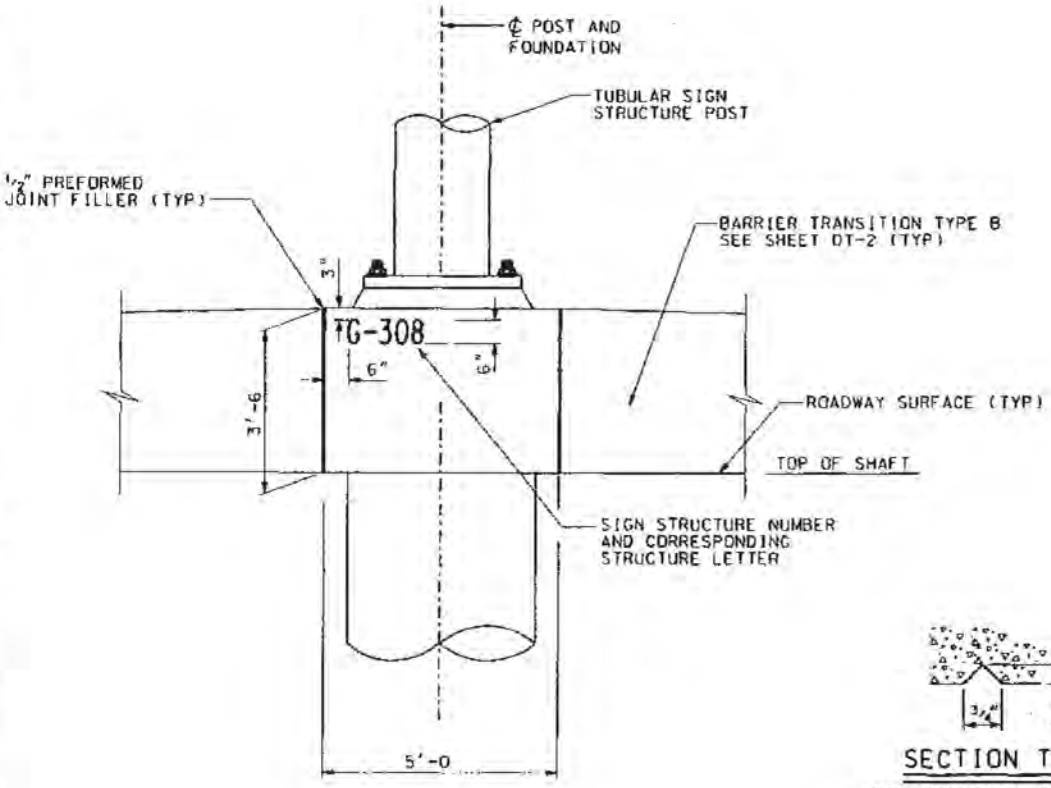


ELEVATION

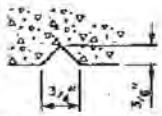


SECTION THRU STRUCTURE NUMBER

DGN Files IP PWPubns\1672\4433.g-306-03_Foundation
@\162\41\3529.P3\sheet\files\structures\new-alpha\Cont_Sign_Foundation.dgn
02-MAY-2006
7/9/2006

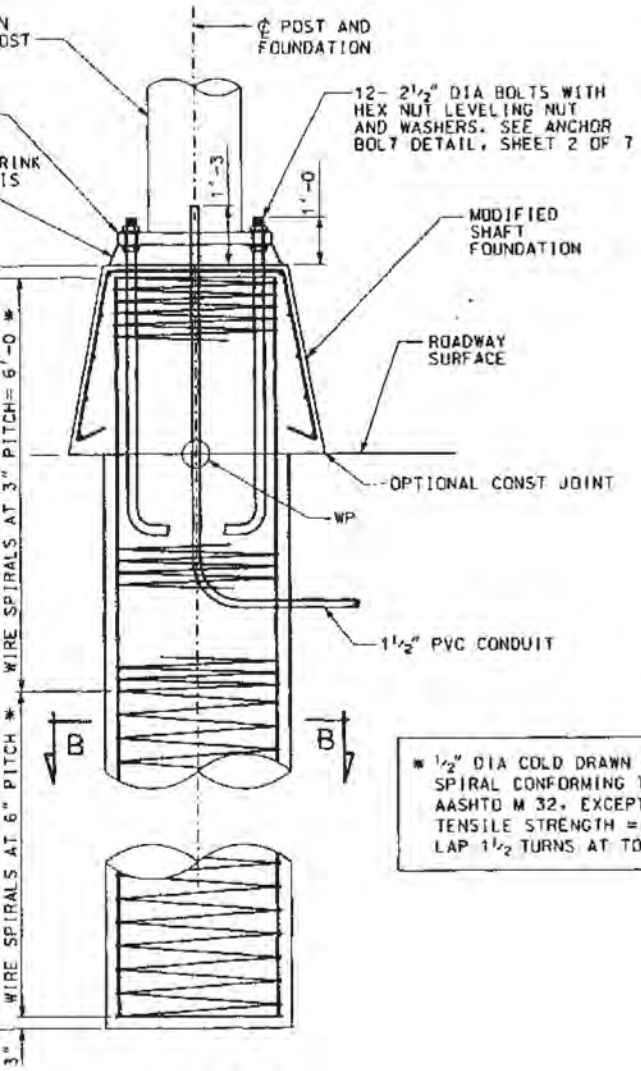


SECTION A-A

* ½" DIA COLD DRAWN STEEL WIRE SPIRAL CONFORMING TO AASHTO M 32. EXCEPT MINIMUM TENSILE STRENGTH = 60 ksi. LAP 1½ TURNS AT TOP AND BOTTOM.

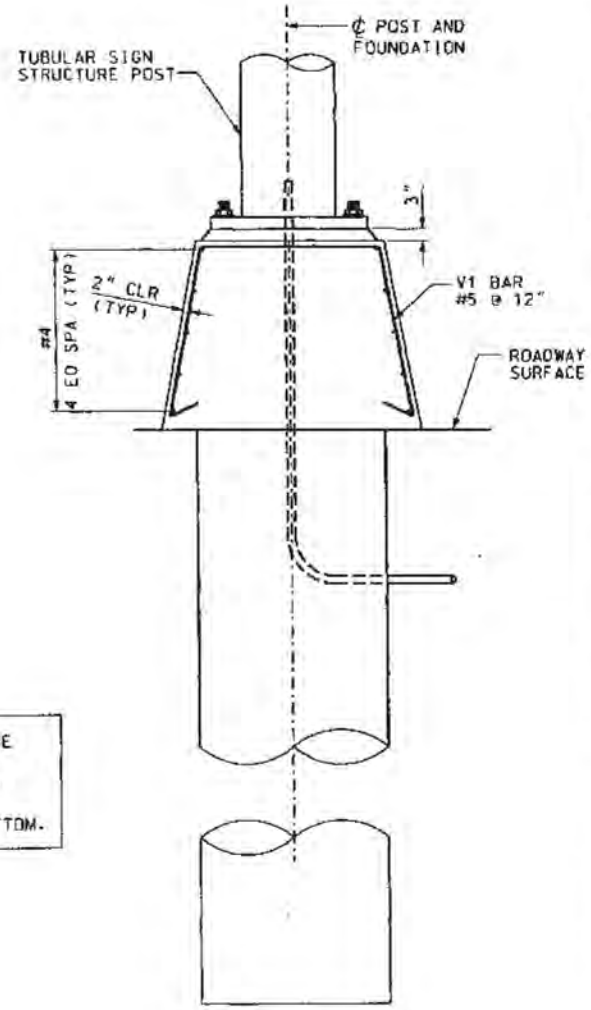


SECTION C-C

SEE BARRIER TRANSITION TYPE B, SHEET DT-2 FOR ADDITIONAL INFORMATION

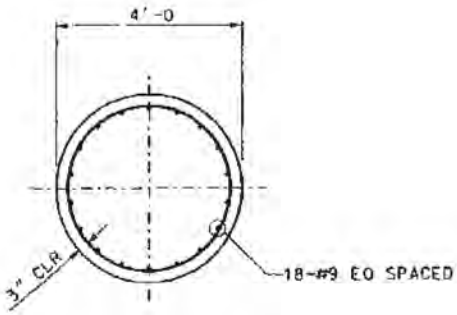


SECTION B-B

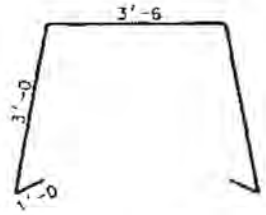


V1 BARS

**FOR INFORMATION ONLY**

| NO. | DATE | BY | REMARKS |
|---|---|---|---|
| | | | |

REVISIONS

UTAH DEPARTMENT OF TRANSPORTATION
SALT LAKE CITY, UTAH
STRUCTURES DIVISION

DESIGN JML 02/05 CHECK DRS 02/05
DRAWN WJP 02/05 CHECK DRS 02/05
QUANT. JML 02/05 CHECK BPD 02/05

APPROVAL RECOMM. 2/09/05 DATE SENIOR DESIGN ENGR.
APPROVED FOR USE BY UDOT DATE UDOT BRIDGE ENGR.

I-15 UTAH CO. LINE TO 10600 SO.
CANTILEVER SIGN STRUCTURE
MEDIAN FOUNDATION DETAILS

PROJECT NUMBER SP-15-7(167)288

SALT LAKE COUNTY

G-308
DRG. NO.

SHT. 3 OF 7

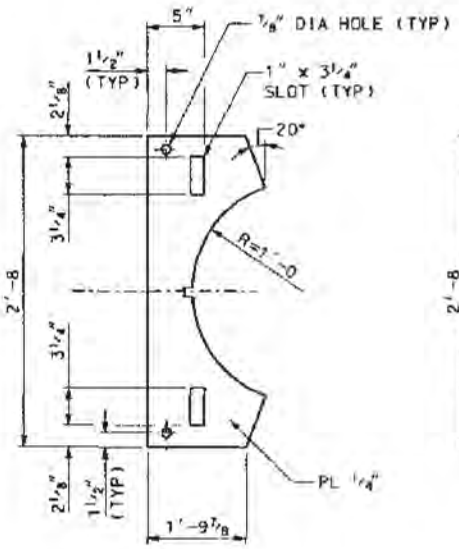


BRACKET PLATE DETAIL

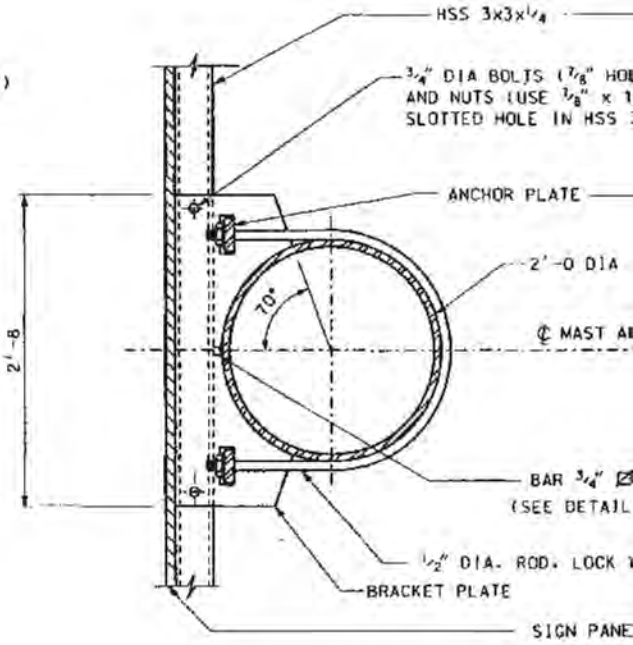


SECTION A-A

SINGLE SIGN SUPPORT

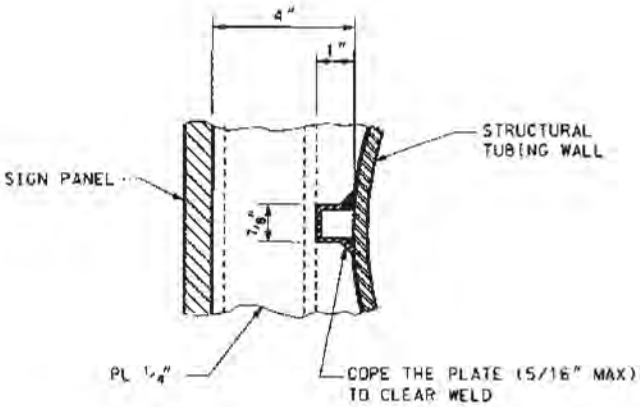


DETAIL "A"

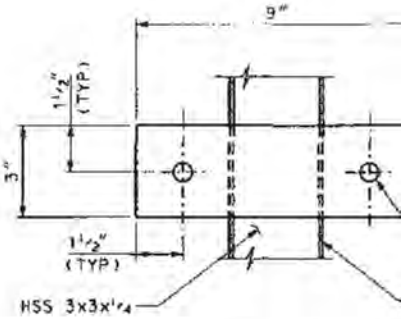


ANCHOR PLATE DETAI

02-MAY-2006 DGN Files IP PWPubms\1672\4433_g-206-84_Foundation
2/9/2005 gt\16244\3225_83\sheet_files\structures\new_signs\Cars_Sign_Support_2.dgn

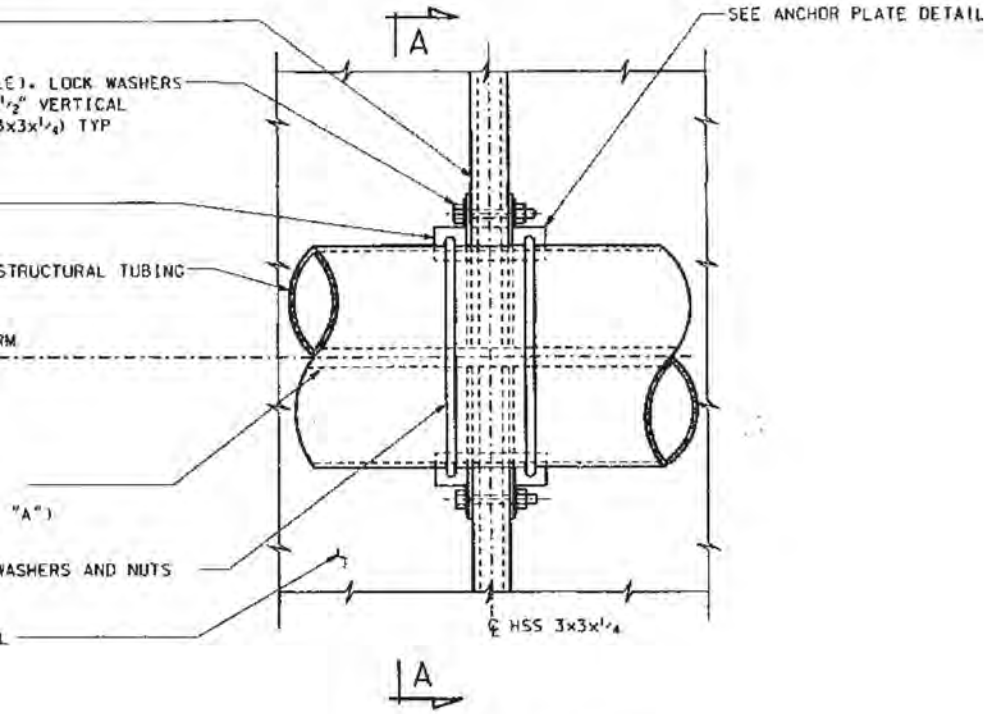


BACK ELEVATION

DETAILS

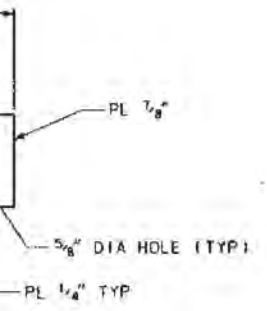


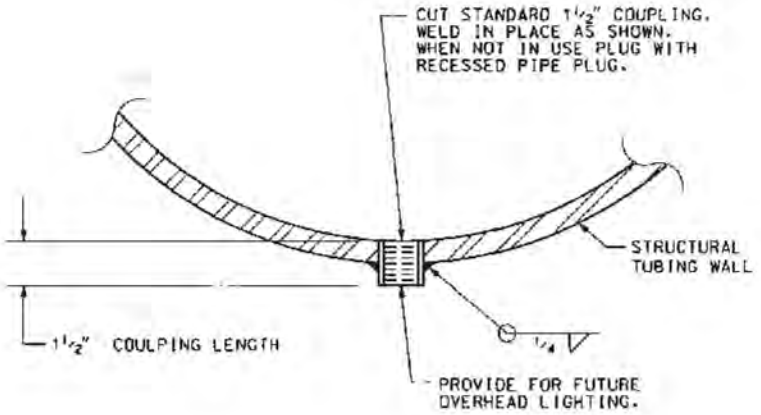


DETAIL "D"

CHASE NIPPLE

**FOR INFORMATION ONLY**

| NO. | DATE | BY | REMARKS |
|---|---|---|---|
| | | | |

REVISIONS

UTAH DEPARTMENT OF TRANSPORTATION
SALT LAKE CITY, UTAH
STRUCTURES DIVISION

DESIGN JML 02/05 CHECK DRS 02/05
DRAWN WJP 02/05 CHECK DRS 02/05
QUANT. JML 02/05 CHECK BPD 02/05

APPROVAL RECOMM. 2/09/05 DATE SENIOR DESIGN ENGR.
APPROVED FOR USE BY UDOT DATE UDOT BRIDGE ENGR.

I-15 UTAH CO. LINE TO 10600 SO.
CANTILEVER SUPPORT STRUCTURE
SIGN CONNECTION DETAILS

PROJECT NUMBER SP-15-7(167)288

SALT LAKE
COUNTY

C-308
DRG. NO.

SHT. 4 OF 7

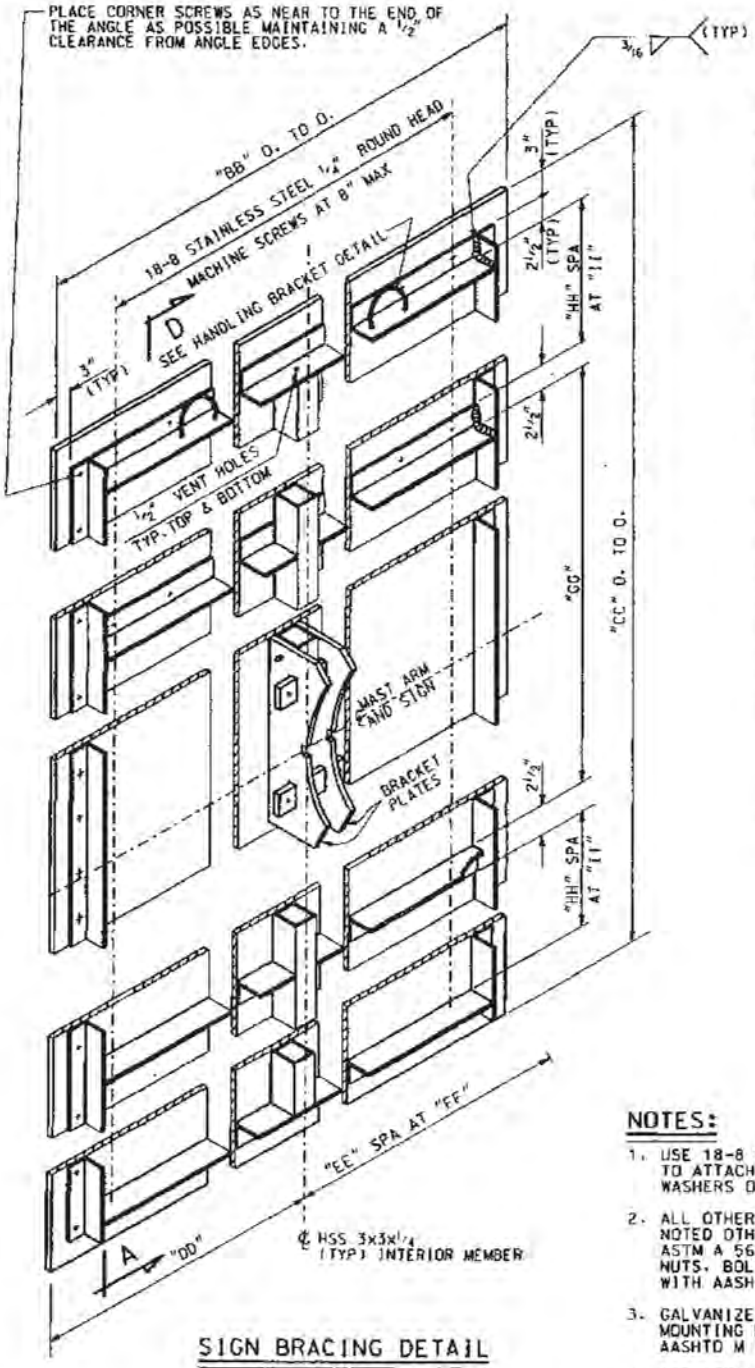


SIGN BRACING DETAIL

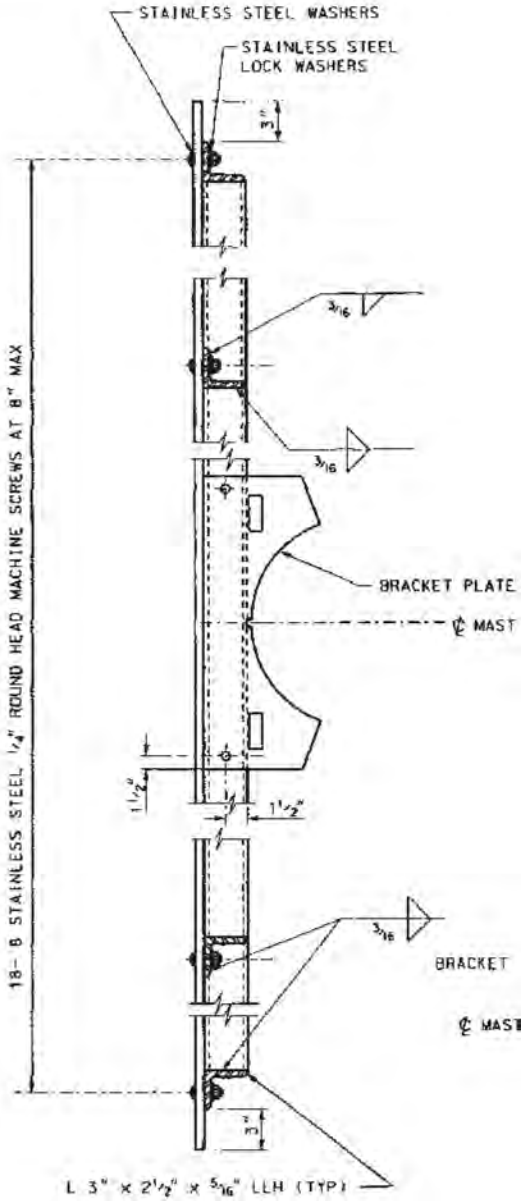


SECTION D-D

SEE SHEET 4 OF 7
FOR BRACKET PLATE DETAILS

## NOTES:

1. USE 18-8 STAINLESS STEEL 1/4" R.H. MACHINE SCREWS AND WASHER TO ATTACH THE SIGN TO THE BRACING. USE BOTH 1/4" FLAT AND L WASHERS ON ALL 1/4" R.H. MACHINE SCREWS.
2. ALL OTHER BOLTS SHALL MEET ASTM A 307 SPECIFICATIONS UNLESS NOTED OTHERWISE. ALL OTHER NUTS AND WASHERS SHALL MEET ASTM A 563 AND F 436 SPECIFICATIONS RESPECTIVELY. ALL NUTS, BOLTS AND WASHERS SHALL BE GALVANIZED IN ACCORDANCE WITH AASHTO M 232.
3. GALVANIZE THE ENTIRE SIGN BRACING ASSEMBLY COMPLETE WITH MOUNTING BRACKETS AFTER FABRICATION IN ACCORDANCE WITH AASHTO M 111 (ASTM A 123).
4. SEE DETAIL "B" FOR BACKING PLATES WHICH ARE REQUIRED AT THE VERTICAL AND HORIZONTAL SEAMS OF THE WOOD PANELS.
5. FOR SINGLE SIGN SEE SHEET "SINGLE SIGN SUPPORT DETAILS."
6. FOR BACK TO BACK SIGNS SEE SHEET 6 OF 7 "DOUBLE SIGN SUPPORT DETAILS."

02-MAY-2005 DGN Files IP PWPubns\1672\4433_g-206-85_Form\Golden
q:\16244\3525.03\sheet_files\structures\cns_signs\Cont_Sign_Brace.dgn
2/4/2005

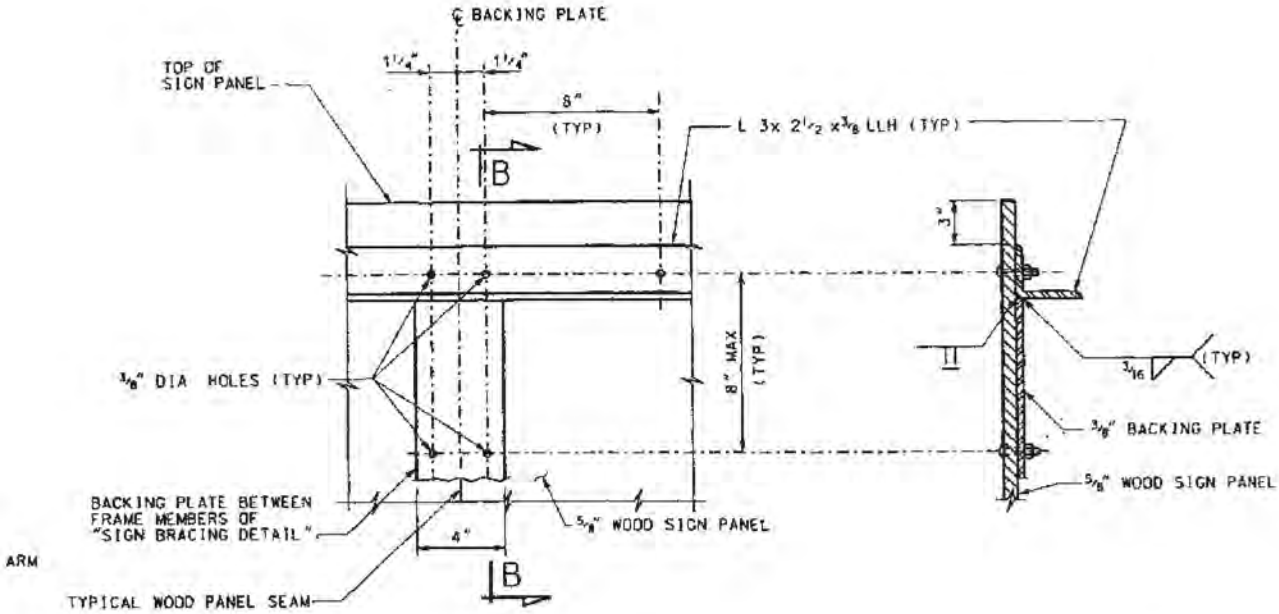


DETAIL "B"

SECTION B-B

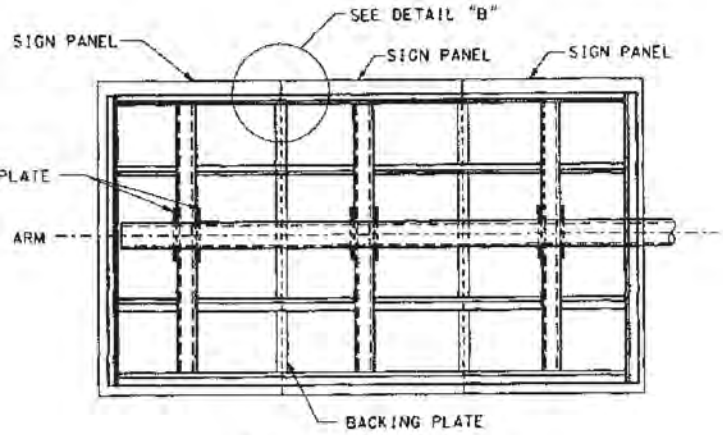


SIGN PANEL LAYOUT

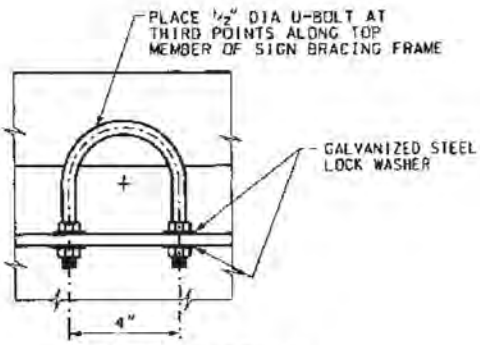


HANDLING BRACKET DETAIL

| SIGN BRACING DIMENSIONS | | | | |
|---|---|---|---|---|
| DIMENSION | STRUCTURE NUMBER | | | |
| | G-308K | G-308L | G-308M | G-308N |
| "BB" | 20'-0 | 13'-0 | 13'-0 | 13'-0 |
| "CC" | 11'-0 | 14'-0 | 14'-0 | 14'-0 |
| "DD" | 1'-6 | 1'-6 | 1'-6 | 1'-6 |
| "EE" | 6 | 4 | 4 | 4 |
| "FF" | 2'-10 | 2'-6 | 2'-6 | 2'-6 |
| "GG" | 3'-0 | 3'-0 | 3'-0 | 3'-0 |
| "HH" | 1 | 2 | 2 | 2 |
| "II" | 3'-4 | 2'-3¾ | 2'-3¾ | 2'-3¾ |

**FOR INFORMATION ONLY**

| NO. | DATE | BY | REMARKS |
|---|---|---|---|
| | | | |

REVISIONS

UTAH DEPARTMENT OF TRANSPORTATION
SALT LAKE CITY, UTAH
STRUCTURES DIVISION

DESIGN JML 02/05 CHECK DRS 02/05
DRAWN WJP 02/05 CHECK DRS 02/05
QUANT. JML 02/05 CHECK BPO 02/05

APPROVAL RECOMM. 2/09/05 DATE SENIOR DESIGN ENGR.
APPROVED FOR USE BY UDOT DATE UDOT BRIDGE ENGR.

I-15 UTAH CO. LINE TO 10600 SO.
CANTILEVER SIGN STRUCTURE
SIGN BRACING DETAILS

PROJECT NUMBER SP-15-7(167)288

SALT LAKE
COUNTY

G-308
DRG. NO.

SHT. 5 OF 7

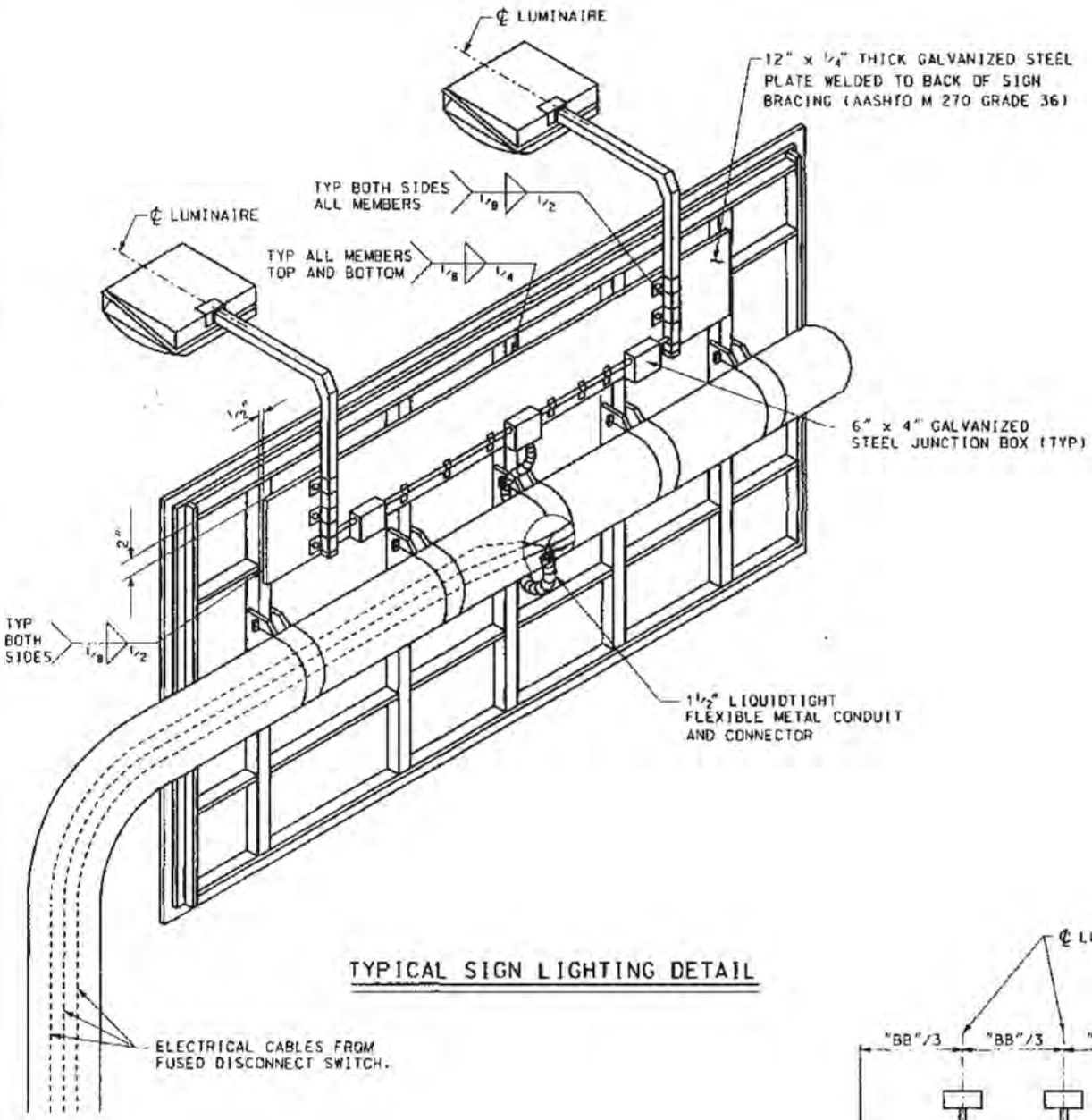


TYPICAL SIGN LIGHTING DETAIL

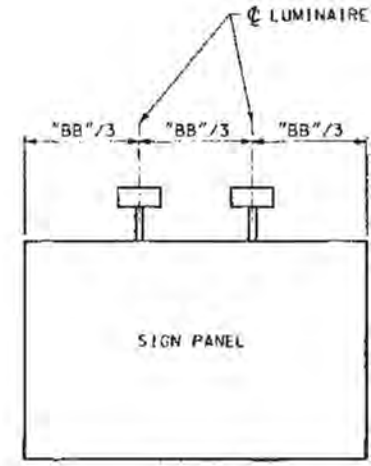


(LOOKING IN THE DIRECTION OF TRAVE

T

02-MAY-2005 DGN Files JP PWPubns\16721\4433.g-306-86-Foruntoudon
8:\16244.3525.03\sheet.files\structures\res.sign\Cant.Sign.light.dgn
2/9/2005

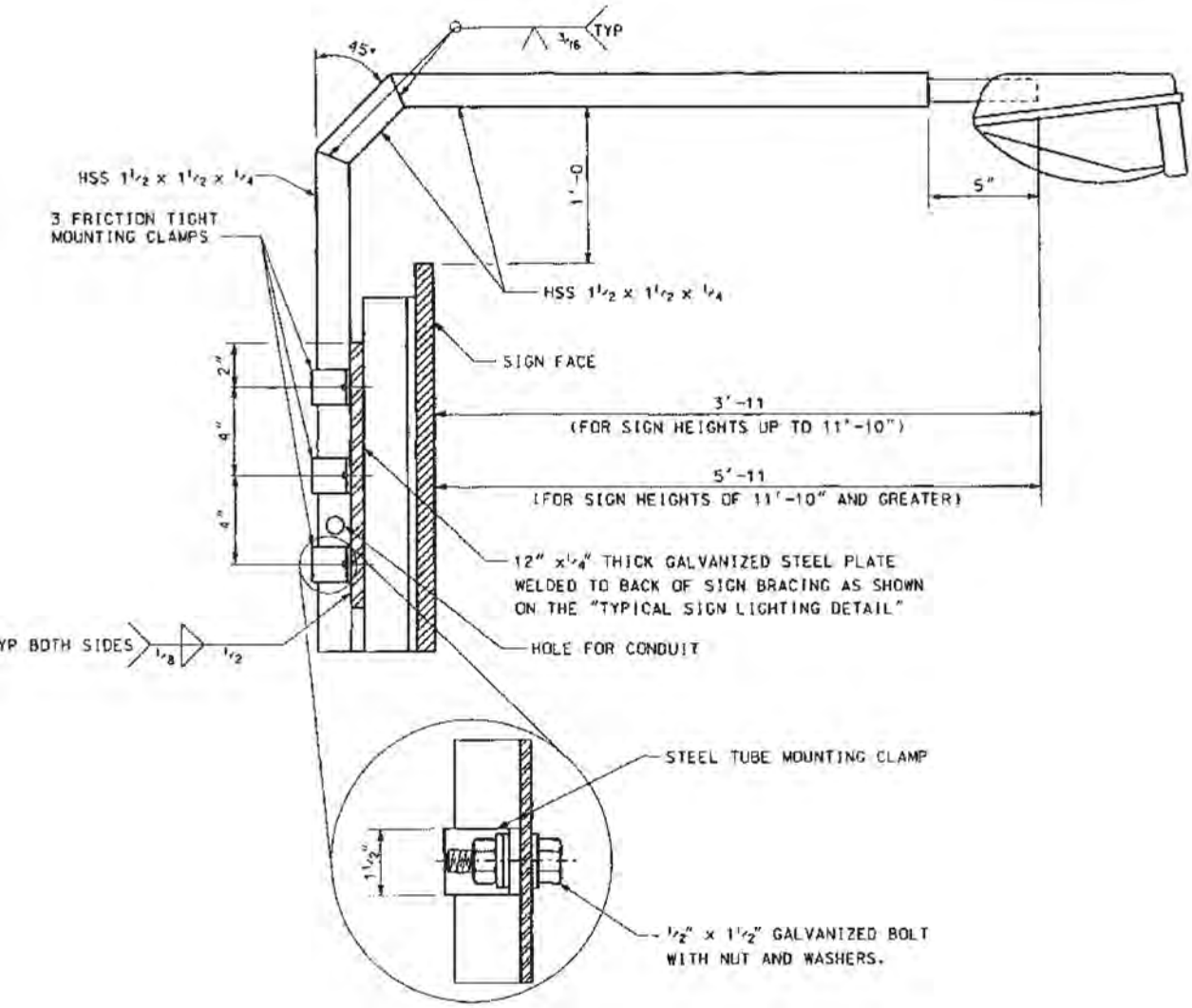


## LUMINAIRE MOUNTING DETAIL

### NOTES:

1. ADJUST LUMINAIRE SUPPORT LOCATION AS REQUIRED TO PROVIDE CLEARANCE BETWEEN MOUNTING LAMP BOLTS AND SIGN BRACING MEMBERS. SHIFT A MINIMUM AMOUNT FROM LOCATIONS SHOWN TO PROVIDE CLEARANCE.
2. LUMINAIRE SUPPORT AND CONNECTION TO SIGN PANEL TO BE PROVIDED BY THE SIGN STRUCTURE MANUFACTURER. SIGN STRUCTURE MAST ARM SHALL BE MANUFACTURED WITH A 1 1/2" NPS COUPLING WELDED TO THE BOTTOM OF THE SIGN SUPPORT ARM TO ACCEPT A 1 1/2" LIQUIDTIGHT CONNECTOR.
3. ALL LUMINAIRE SUPPORT BRACKETS AND MOUNTING HARDWARE, INCLUDING HOLLOW STRUCTURAL SECTIONS (HSS), SHALL BE FABRICATED WITH SIGN BRACING AND SHALL BE HOT DIPPED GALVANIZED AFTER FABRICATION.
4. NO WIRES SHALL BE SPLICED WITHIN THE SIGN STRUCTURE. ALL SPLICES SHALL OCCUR IN THE JUNCTION BOX.

**FOR INFORMATION ONLY**

REVISIONS

| NO. | DATE | BY | REMARKS |
|---|---|---|---|

UTAH DEPARTMENT OF TRANSPORTATION
SALT LAKE CITY, UTAH
STRUCTURES DIVISION

DESIGN JML 02/05 CHECK DRS 02/05
DRAWN WJP 02/05 CHECK DRS 02/05
QUANT. JML 02/05 CHECK BPD 02/05

APPROVAL RECOMM. 2/09/05 DATE SENIOR DESIGN ENGR.
APPROVED FOR USE BY UDOT DATE UDOT BRIDGE ENGR.

I-15 UTAH CO. LINE TO 10600 SO.
CANTILEVER SUPPORT STRUCTURE
SIGN LIGHTING DETAILS

PROJECT NUMBER SP-15-7(167)288

SALT LAKE COUNTY

G-308 DRG. NO.

SHT. 6 OF 7

| STRUCTURE NUMBER | ℄ FOUNDATION | | | STRUCTURE LA CANTILEVER SIGN STRUCTU | | |
|---|---|---|---|---|---|---|
| | STATION | OFFSET * (EDGE OF SHOULDER) | LOCATION | SPAN | MAST ARM | |
| | | | | A | B | |
| G-308K | 622+40.00 | 19'-0 LT | I-15 MEDIAN | 35'-0 | 22'-0 | 2 |
| G-308L | 673+08.80 | 21'-0 RT | I-15 SB | 33'-6 | 20'-6 | 2 |
| G-308M | 635+60.00 | 19'-0 RT | I-15 SB | 31'-6 | 18'-6 | 2 |
| G-308N | 618+17.60 | 19'-0 RT | I-15 SB | 31'-6 | 18'-6 | 2 |

* LAYOUT IS LOOKING AHEAD IN THE DI

02-MAY-2005 DGN Files IP PWPubns\16724\4433.g-308-07_FoundFoodon
3/25/2005 3:\16244\3525.03\sheet_files\structures\new_signs\Cant_Sign_table.dgn

| YOUT URE | STRUCTURAL TUBING WALL THICKNESS | | CAMBER OF ARM | DRILLED SHAFT FOUNDATION DEPTH |
|---|---|---|---|---|
| POST HEIGHT | | | | |
| C | F1 | F2 | G | X |
| 25'-0 | 3/4" | 1/2" | 4" | 24'-0 |
| 27'-0 | 3/4" | 1/2" | 3" | 24'-0 |
| 27'-0 | 3/4" | 1/2" | 3" | 24'-0 |
| 27'-0 | 3/4" | 1/2" | 3" | 24'-0 |

RECTION OF TRAFFIC

**FOR INFORMATION ONLY**

| NO. | DATE | BY | REMARKS |
|---|---|---|---|
| | | | |

REVISIONS

UTAH DEPARTMENT OF TRANSPORTATION
SALT LAKE CITY, UTAH
STRUCTURES DIVISION

DESIGN JML 02/05 CHECK DRS 02/05
DRAWN WJP 02/05 CHECK DRS 02/05
QUANT. JML 02/05 CHECK BPD 02/05

APPROVAL RECOMM. 2/09/05 DATE SECTION DESIGN ENGR.
APPROVED FOR USE BY UDOT DATE UDOT BRIDGE ENGR.

I-15 UTAH CO. LINE TO 10600 SO.
CANTILEVER SIGN STRUCTURE
SIGN SUPPORT SCHEDULE

PROJECT NUMBER SP-15-7(167)288

SALT LAKE
COUNTY

G-308
DRG. NO.

SHT. 7 OF 7

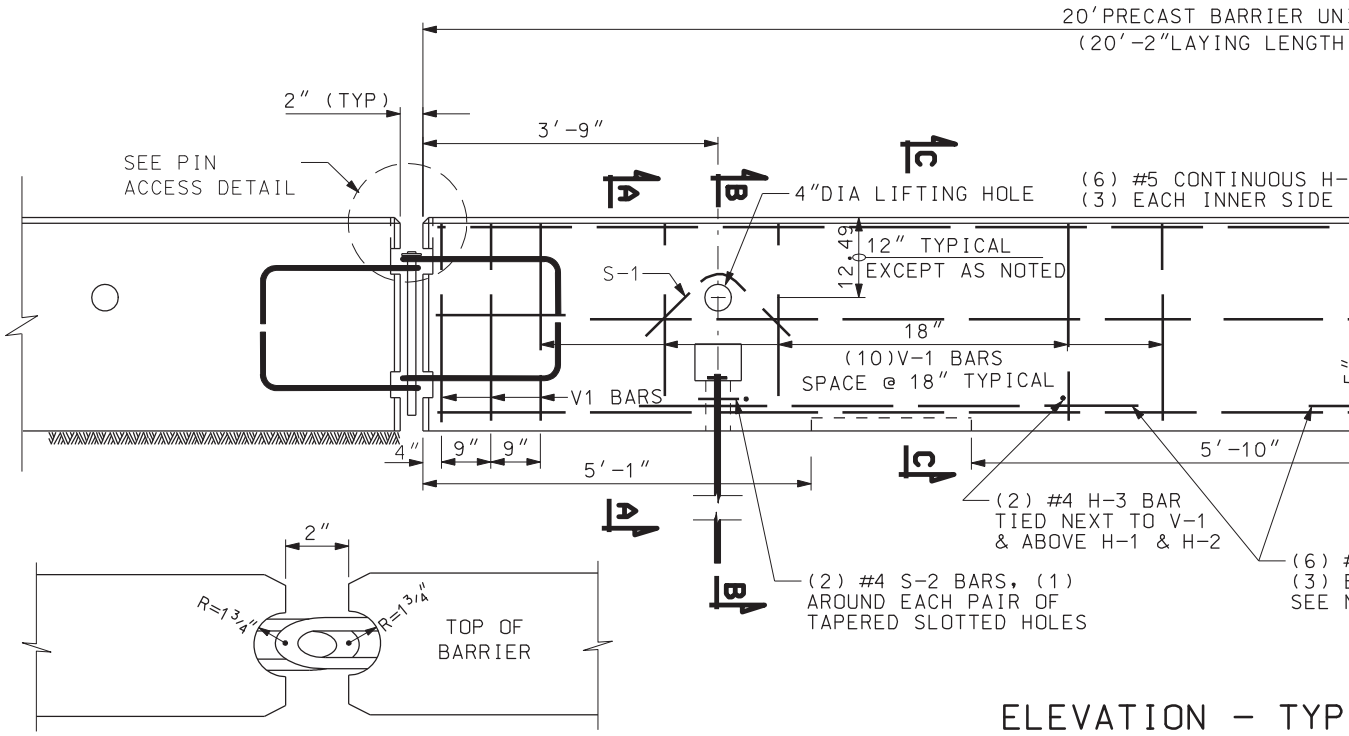


PIN ACCESS DETAIL

ELEVATION - TYP

MASS: 3.9 TONS PER

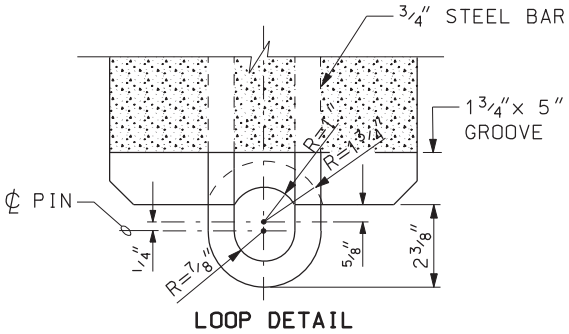


LOOP DETAIL

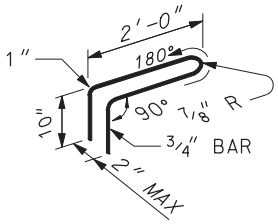


GALVANIZED
STEEL BAR

CONNECTION DETAILS

SEE BA 1B FOR PIN DETAILS

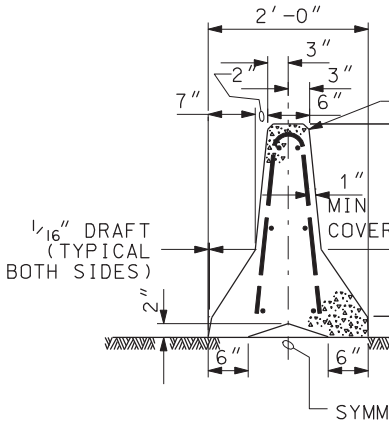


SECTION A-A

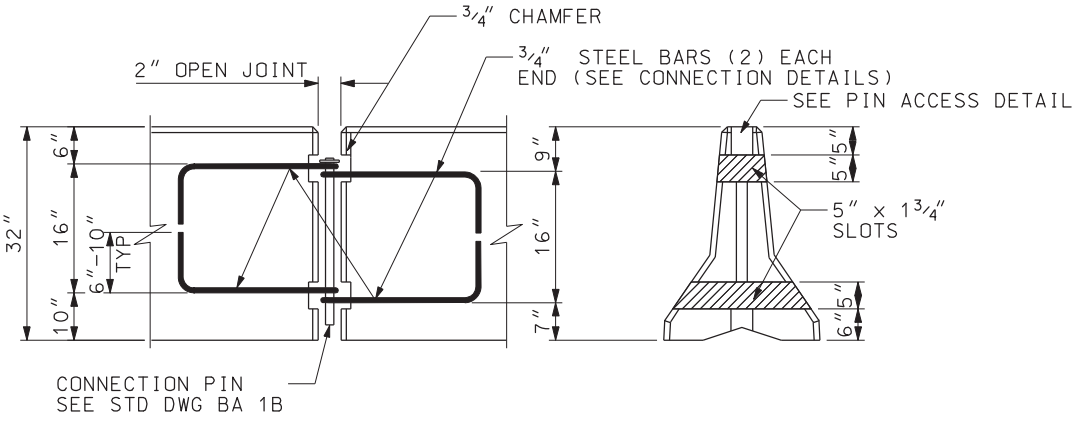


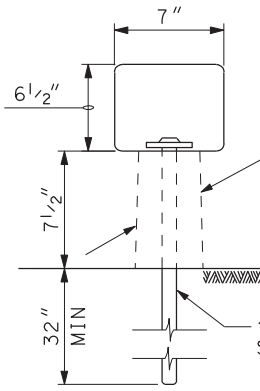


LOOP LOCATION

BARRIER SLOT DETAIL

BARRIER S

DGN File: N:\Esd\Standard Drawings\Imperial\2005Approved\Barriers (BA)\ba01A.dgn
25-JAN-2005

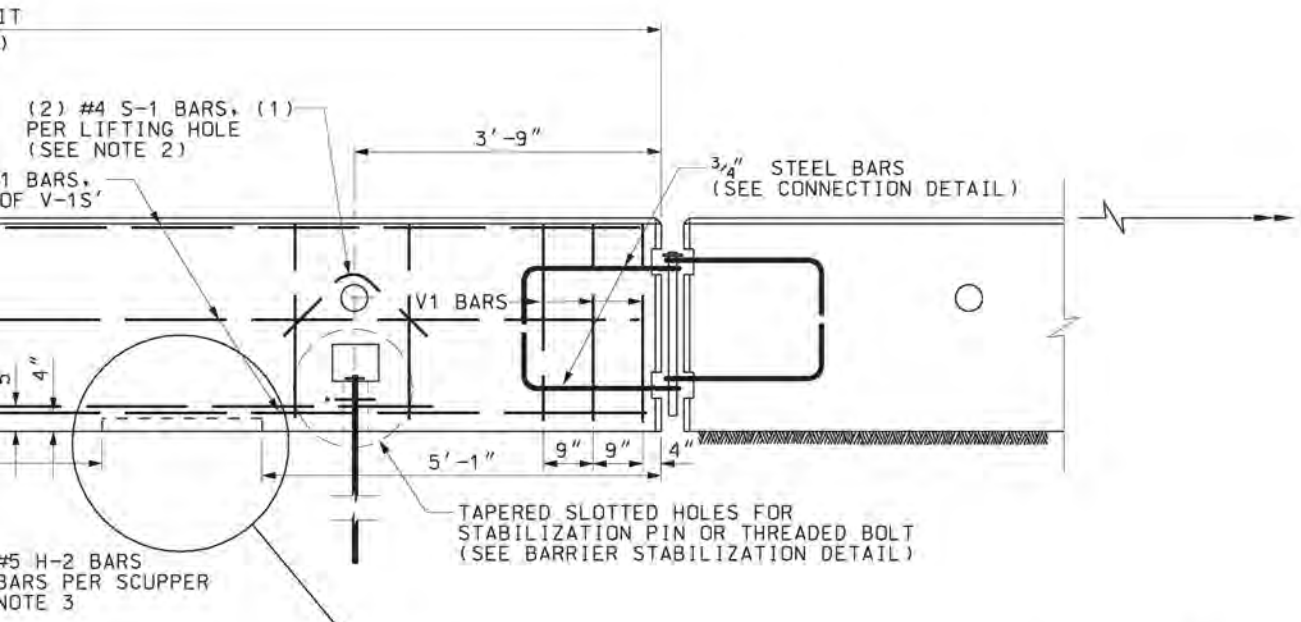


ICAL BARRIER
R PANEL

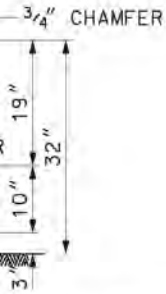


ETRICAL ABOUT
RETE BARRIER

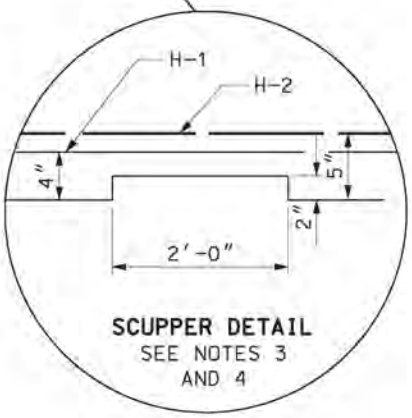


**SCUPPER DETAIL**
SEE NOTES 3 AND 4

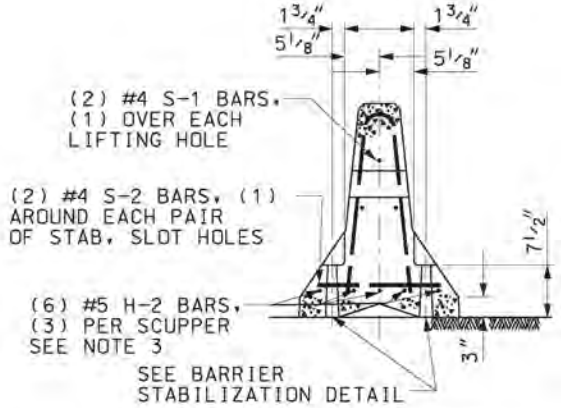


**SECTION B-B**

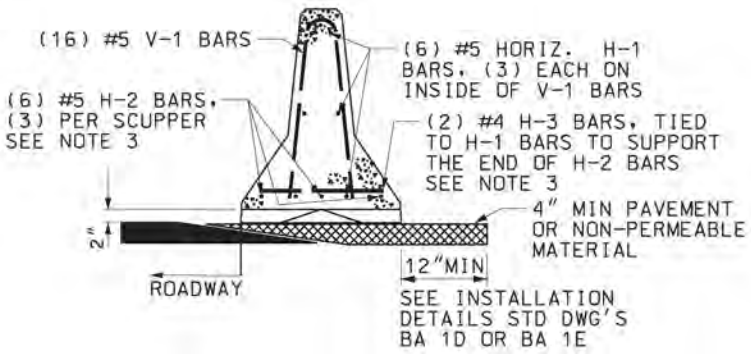


**SECTION C-C**

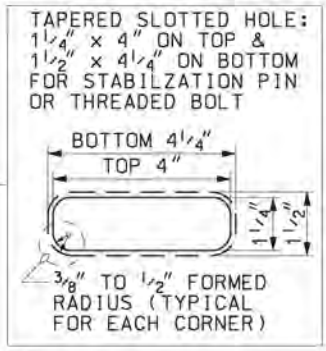


1" x 3'-4"
SEE STD DWG BA 1B

TABILIZATION DETAIL

## NOTES:

1. SEE STD DWG BA 2B FOR REINFORCEMENT STEEL REQUIREMENTS.
2. USE A 4" WHITE PVC SLEEVE TO FORM THE LIFTING HOLES. LEAVE SLEEVE IN PLACE AFTER CASTING.
3. INDICATE ON PLAN SET WHEN BARRIER SECTIONS WITH SCUPPERS ARE REQUIRED.
4. PROVIDE BLOCK OUT AND REINFORCING STEEL FOR SCUPPERS WHEN NOTED ON PLANS.
5. PLACE AN ADEQUATE AMOUNT OF SILICONE ADHESIVE ON BOTTOM OF WASHER BEFORE INSERTING PIN TO HOLD IN PLACE AND PREVENT EASY HAND REMOVAL.

REVISIONS

| NO. | DATE | APPR. | REMARKS |
|---|---|---|---|
| | | | |

PORTATION
: CONSTRUCTION

JAN.01.2005 DATE
JAN.01.2005 DATE

RECOMME
CHAIRMA APPROVE
DEPUTY DIRECTOR

PRECAST CONCRETE FULL BARRIER STANDARD SECTION

STANDARD DRAWING TITLE

STD DWG
BA 1A

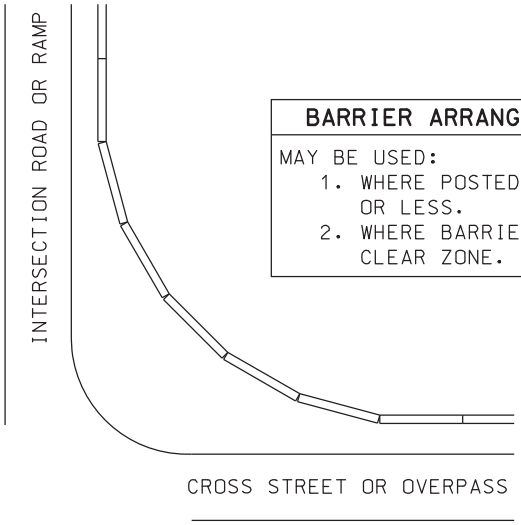


**BARRIER ARRANGED ON A CURVE**

MAY BE USED:
1. WHERE POSTED SPEED IS 35 MPH OR LESS.
2. WHERE BARRIER IS OUTSIDE THE CLEAR ZONE.

CURVED LAYOUT

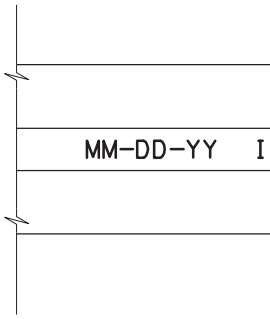


BARRIER MARK

SEE NOTE 1

CENTER
POLYU
OF
COM

## METAL REINFORCEMENT TABLE

| MARK | LOCATION | BAR SIZE | (NO. BARS) | SKETCH |
|---|---|---|---|---|
| H-1 | HORIZONTAL IN BARRIER TIED INSIDE V-1 BARS | #5 | (6) | 19′-3″ |
| H-2 | CENTERED ABOVE SCUPPERS LONG. & TRANSVERSELY | #5 | (6) | 6′-6″ |
| H-3 | TIED ABOVE H-1 BARS TO SUPPORT H-2, TIED TO V-1 | #4 | (2) | 1′-6″ |
| S-1 | 2 BARS CENTERED OVER EACH LIFTING HOLE | #4 | (4) | 3 3/8″R, 2′-5″, 90°, LIFTING HOLE |
| S-2 | HORIZ. AROUND SLOTS BETWEEN V-I SCUPPERS | #4 | (2) | (4)1 1/2″R, SLOTS, 7″, 1″MIN, 1″MIN, CLEAR TO BAR, 12″ OVERLAP, 1′-6″ |
| V-1 | VERTICAL IN BARRIER(3) EACH END & (2) AT EACH SCUPPER | #5 | (16) | 2 3/16″R, TOTAL LENGTH 4′-9″, 4 3/8″, 12°, 9 1/2″, 2′-1 3/8″ |

DGN File:N:\Esd\Standard_Drawings\Imperial\2005Approved\Barriers (BA)\ba01B.dgn
25-JAN-2005

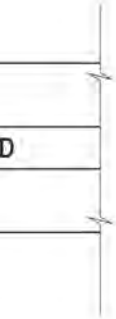


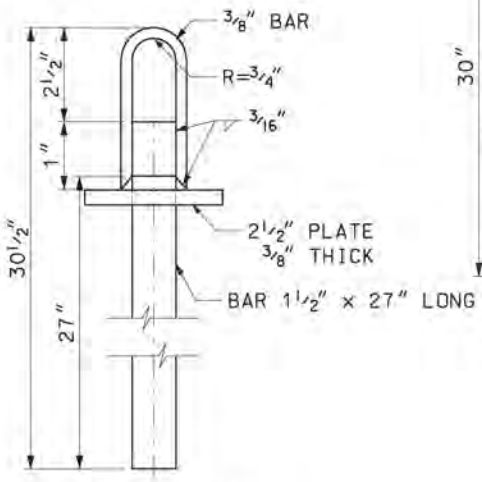


GALVANIZED
CONNECTING PIN
OPTION 1

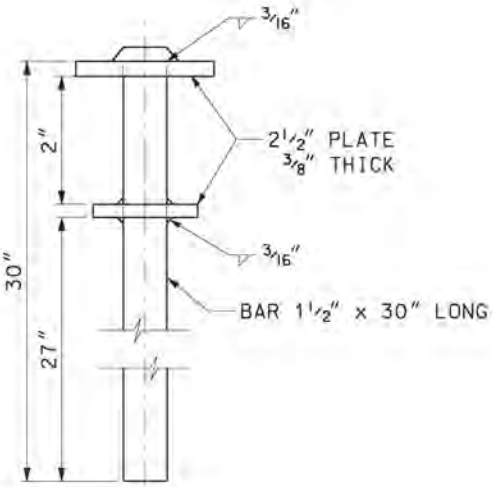


GALVANIZED
CONNECTING PIN
OPTION 2

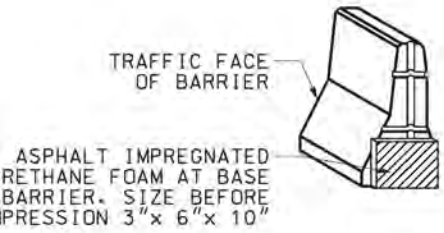


BARRIER SEAL
SEE NOTE 3

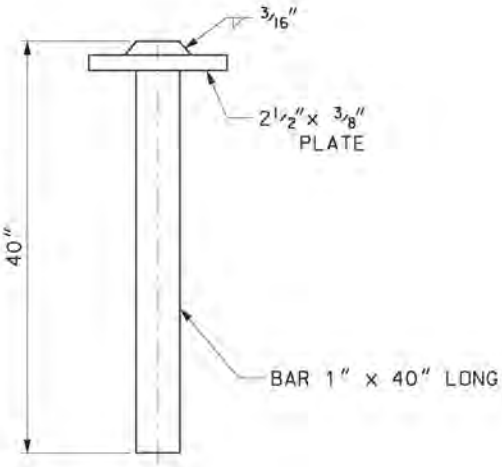


STABILIZATION
PIN

**NOTES:**

1. MARK EACH BARRIER WITH 1 1/2" NUMBERS INDICATING THE DATE OF CASTING AND IDENTIFICATION NUMBER SUPPLIED BY THE INSPECTOR. IMPRESSED 1/4" DEEP INTO THE TOP CENTER OF THE BARRIER.
2. USE COATED REINFORCING STEEL EXCEPT AS NOTED.
3. DO NOT USE BARRIER SEAL WHEN SCUPPERS ARE PRESENT ON BARRIER.
4. PLACE AN ADEQUATE AMOUNT OF SILICONE ADHESIVE ON BOTTOM OF WASHER BEFORE INSERTING PIN TO HOLD IN PLACE AND PREVENT EASY HAND REMOVAL.

REVISIONS

| NO. | DATE | APPR. | REMARKS |
|---|---|---|---|
| | | | |

PORTATION
: CONSTRUCTION

RECOMME JAN.01,2005 DATE

CHAIRMA APPROVE JAN.01,2005 DATE

DEPUTY DIRECTOR

STANDARD DRAWING TITLE

PRECAST CONCRETE
FULL BARRIER
STANDARD SECTION

STD DWG

BA 1B

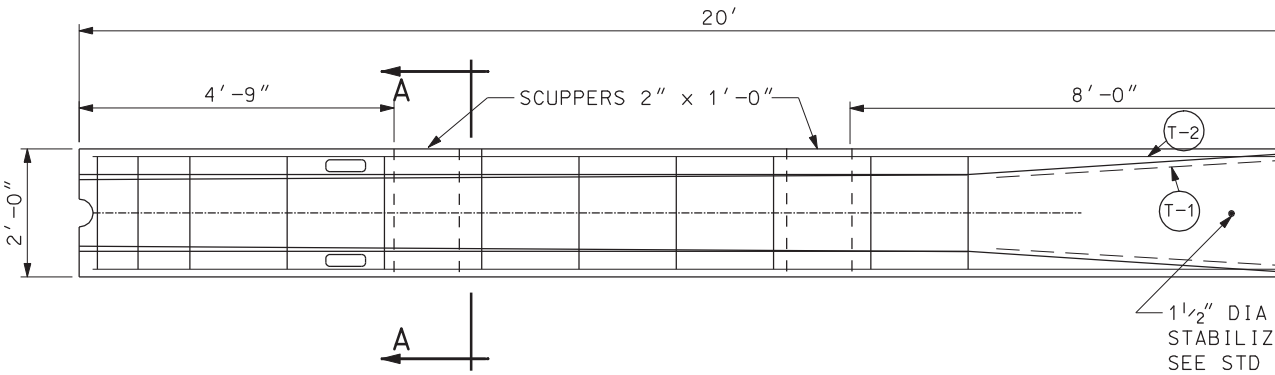


TERMINAL PLAN

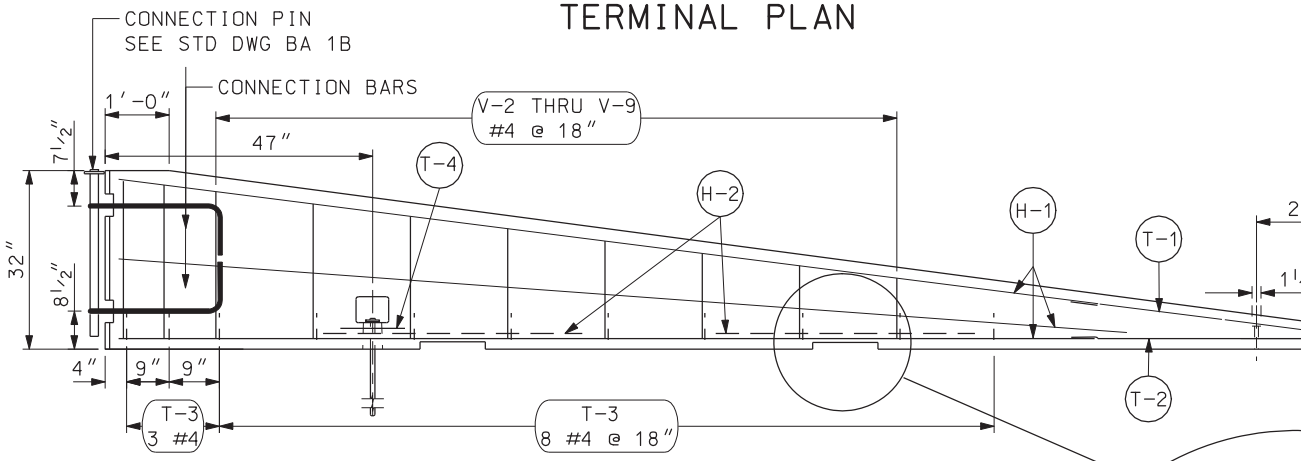


TERMINAL ELEVATION

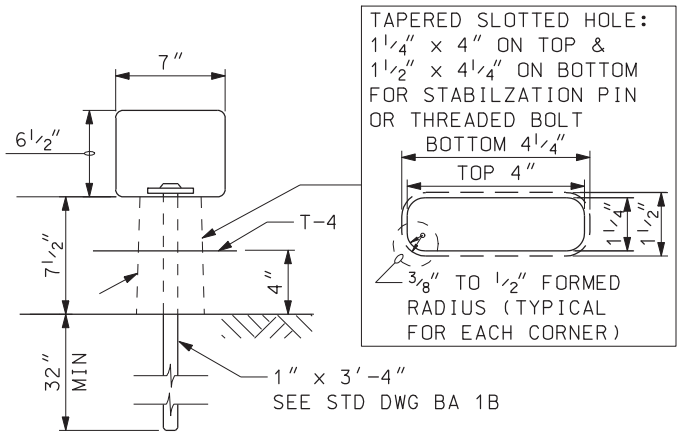


BARRIER STABILIZATION DETAIL

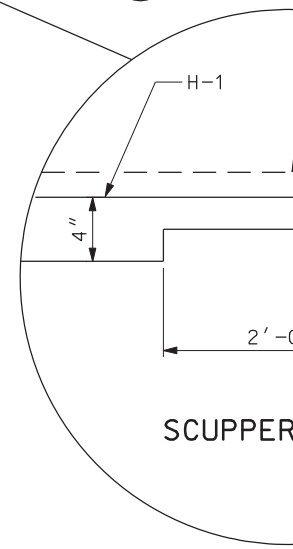


## REINFORCING STEEL FOR TERMINAL

| MARK | LOCATION | SIZE NO. | NO. BARS | LENGTH | SKETCH |
|---|---|---|---|---|---|
| T-1 | HORIZONTAL TOP AT SLOPE END OF BARRIER | 5 | 1 | 15′-7″ | 7′-0″; 4″; 1′-7″ |
| T-2 | HORIZONTAL BOTTOM AT SLOPED END OF BARRIER | 5 | 1 | 15′-7″ | 7′-0″; 1′-7″ |
| T-3 | VERTICAL THROUGH BARRIER | 4 | 10 | 3′-8″ | 6″; 9″; 12″; 1′-8″ |
| T-4 | HORIZONTAL AT STABILIZATION PIN SLOT | 4 | 1 | | 1½″R; 5′-1″ BAR W/(4) 1½″R BENDS & MIN 1′-0″ OVERLAP; SLOTS; 7″; 1′-6″; 1″ MIN CLEAR TO BAR |

| MARK | LOCATION |
|---|---|
| H-1 | HORIZONTAL IN BARRIER TIED TO V |
| H-2 | CENTERED ABOVE SCUPPER LONG.& T |
| V-1 | VERTICAL IN BARRIER |
| V-2 | VERTICAL IN BARRIER |
| V-3 | VERTICAL IN BARRIER |
| V-4 | VERTICAL IN BARRIER |
| V-5 | VERTICAL IN BARRIER |
| V-6 | VERTICAL IN BARRIER |
| V-7 | VERTICAL IN BARRIER |
| V-8 | VERTICAL IN BARRIER |
| V-9 | VERTICAL IN BARRIER |

DGN File:N:\Esd\Standard_Drawings\Imperial\2005Approved\Barriers (BA)\ba01C.dgn
25-JAN-2005

HOLE FOR
ATION PIN
DWG BA 1B

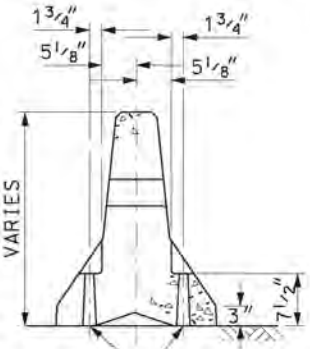


SECTION A-A

TAPERED SLOTTED HOLES
FOR STABILIZATION
PINS (SEE BARRIER
STABILIZATION DETAIL)

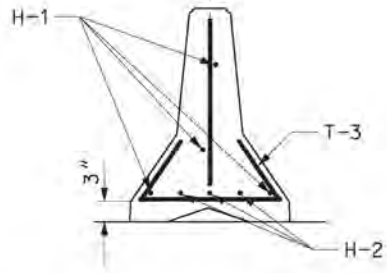


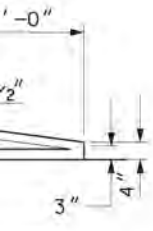


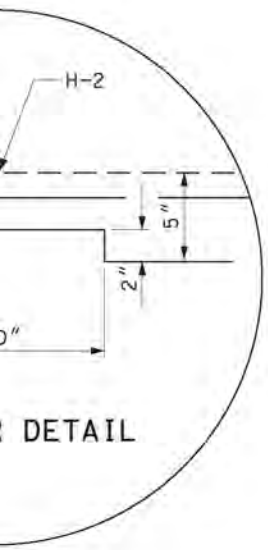


R DETAIL

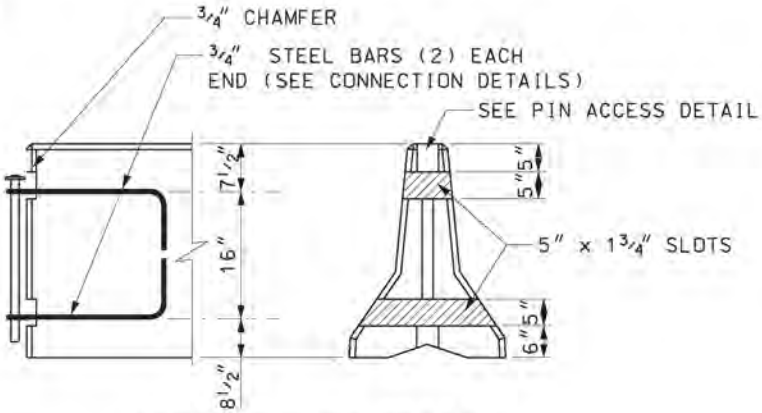


BARRIER SLOT DETAIL

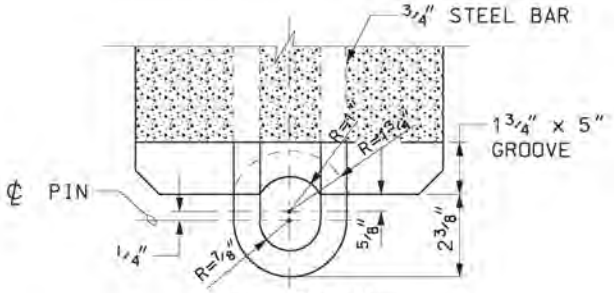


LOOP DETAIL

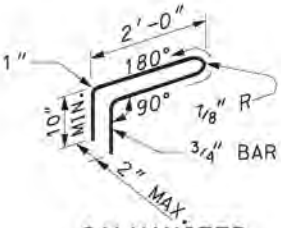


GALVANIZED
STEEL BAR

CONNECTION DETAILS

| | SIZE NO. | NO. BARS | LENGTH |
|---|---|---|---|
| V BARS | 4 | 4 | 15'-0" |
| TRAVERSELY | 4 | 6 | 4'-0" |
| | 4 | 2 | 2'-4" |
| | 4 | 1 | 2'-2" |
| | 4 | 1 | 2'-0" |
| | 4 | 1 | 1'-10" |
| | 4 | 1 | 1'-8" |
| | 4 | 1 | 1'-6" |
| | 4 | 1 | 1'-4" |
| | 4 | 1 | 1'-2" |
| | 4 | 1 | 1'-0" |

## NOTES:

1. USE TERMINAL SECTION AS ALLOWED ON STD DWG BA 1D AND BA 1E.
2. USE IN WORK ZONES PERMITTED WHEN SPEEDS ARE ≤40 MPH PRIOR TO CONSTRUCTION.
3. WHEN USED IN A BURIED IN BACKSLOPE APPLICATION TERMINAL SECTION DOES NOT NEED TO BE PLACE ON PAVED SURFACE.
4. USE CONNECTION PIN AND STABILIZATION PINS AS PER STD DWG BA 1B. PIN TERMINAL SECTION AND STANDARD SECTION TOGETHER AT CONNECTION LOOPS. INSTALL STABILIZATION PINS IN ALL APPLICATIONS.
5. PRE-DRILL A 1 INCH HOLE THROUGH THE PAVED SURFACE PRIOR TO INSTALLING THE STABILIZATION PINS.
6. DO NOT PLACE BARRIER ON TOP OF ANY CURBING.
7. DO NOT OVERLAY ANY MATERIAL PAST THE FIRST BREAK POINT ON THE BARRIER. THE FIRST BREAK POINT IS 3 INCHES FROM THE BOTTOM OF THE BARRIER.
8. PLACE AN ADEQUATE AMOUNT OF SILICON ADHESIVE ON THE BOTTOM WASHER OF THE CONNECTION PIN BEFORE INSERTING, TO HOLD IN PLACE AND PREVENT EASY HAND REMOVAL.
9. USE COATED REINFORCING STEEL EXCEPT AS NOTED.

REVISIONS

| NO. | DATE | APPR. | REMARKS |
|---|---|---|---|
| | | | |

PORTATION
: CONSTRUCTION

JAN.01.2005
DATE

JAN.01.2005
DATE

RECOMME

CHAIRMA
APPROVE

DEPUTY DIRECTOR

STANDARD DRAWING TITLE

PRECAST CONCRETE
BARRIER TERMINAL
FOR SPEED ≤ 40 MPH

STD DWG
BA 1C

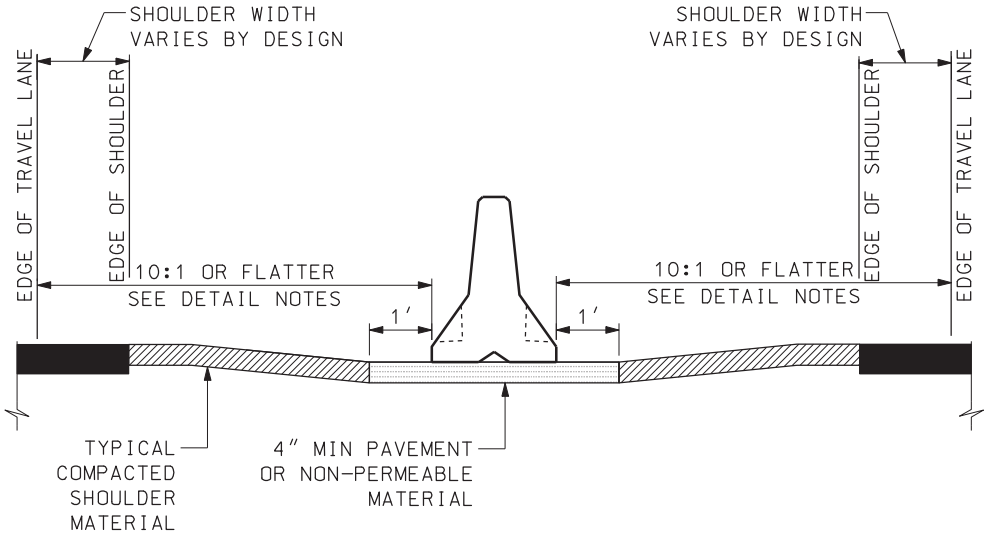


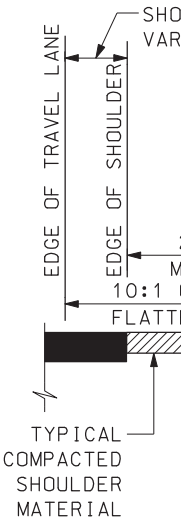


## MEDIAN INSTALLATION

USE THIS DETAIL WHEN MEDIAN BARRIER IS WARRANTED

1. NO STABILIZATION PINS ARE REQUIRED WHEN BARRIER FACE IS GREATER THAN 12 FEET FROM TRAVEL LANE.

2. INSTALL STABILIZATION PINS WHEN BARRIER FACE IS 12 FEET OR LESS FROM TRAVEL LANE.

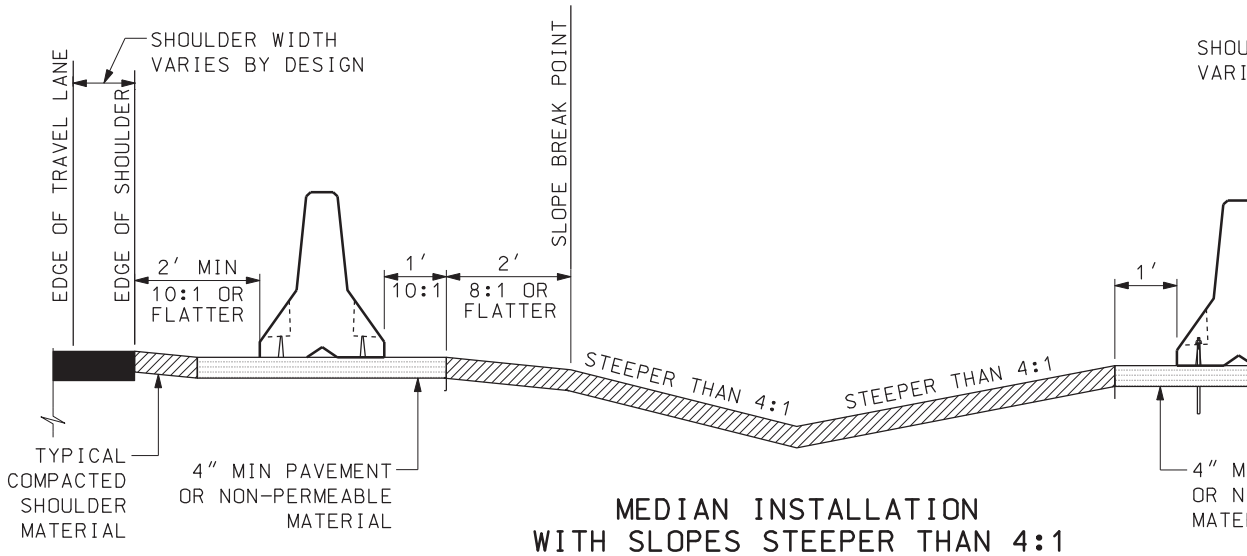


## MEDIAN INSTALLATION WITH SLOPES STEEPER THAN 4:1

USE THIS DETAIL WHEN MEDIAN BARRIER IS WARRANTED

1. IF THE 10:1/8:1 SLOPE 3 FEET BEHIND THE BARRIERS CANNOT BE MAINTAINED STABILIZATION PINS ARE REQUIRED.

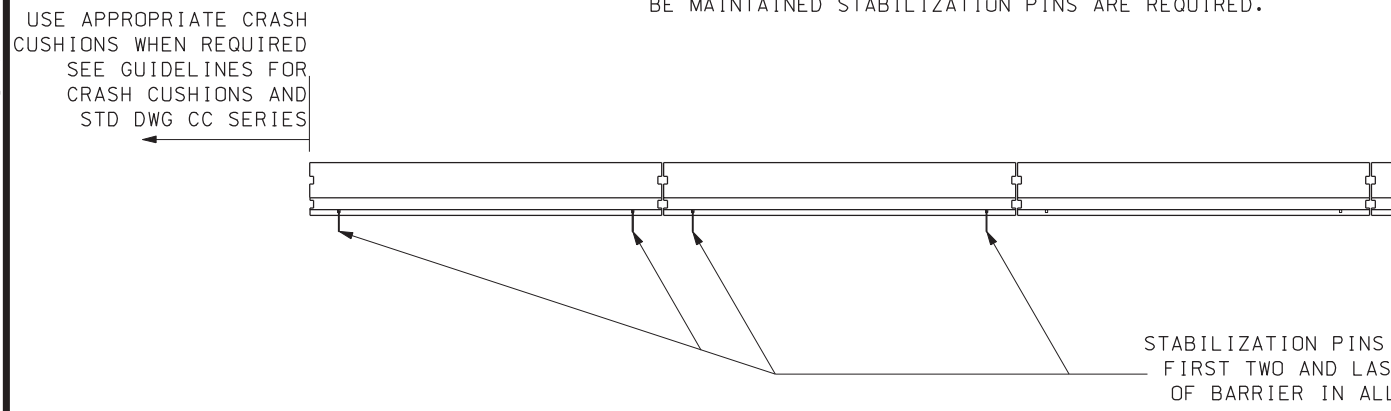


DGN File:N:\Esd\Standard.Drawings\Imperial\2005Approved\Barriers (BA)\ba01D.dgn
25-JAN-2005

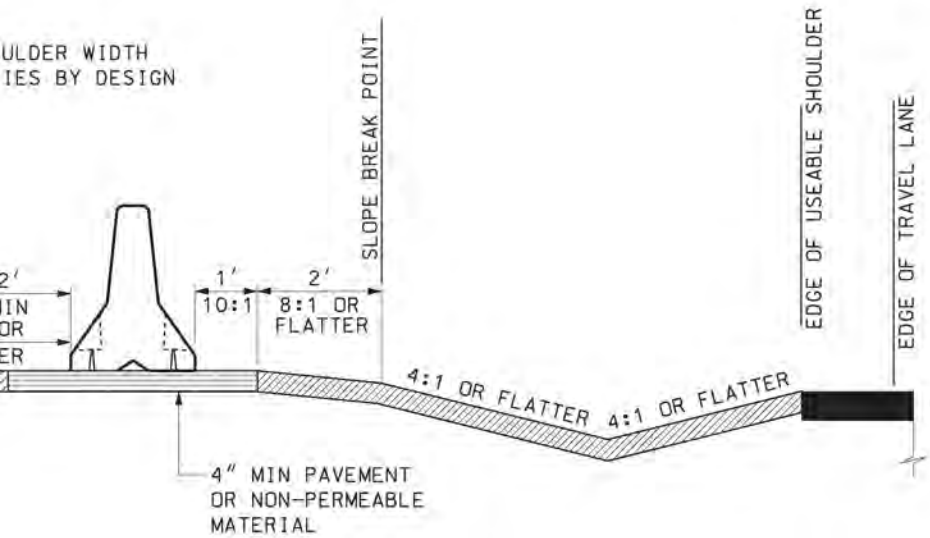


## MEDIAN INSTALLATION W/ OFFSET ROADWAY

USE THIS DETAIL WHEN MEDIAN BARRIER IS WARRANTED

1. IF THE 10:1/8:1 SLOPE 3 FEET BEHIND THE BARRIERS CANNOT BE MAINTAINED STABILIZATION PINS ARE REQUIRED.

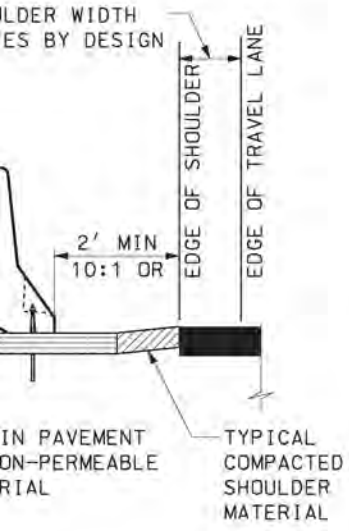


**NOTES:**

1. USE APPROPRIATE FLARE RATE AS SUGGESTED IN THE ROADSIDE DESIGN GUIDE, CURRENT EDITION, FOR RIGID BARRIER SYSTEMS, WHEN BARRIER IS PLACED WITH A FLARE.
2. PLACE BARRIER ON A 4" PAVED OR NON PERMEABLE SURFACE.
3. DO NOT PLACE BARRIER ON TOP OF ANY CURBING.
4. PIN ALL BARRIER SECTIONS TOGETHER AT CONNECTION LOOPS.
5. PRE-DRILL A 1" THROUGH THE PAVED SURFACE PRIOR TO INSTALLING THE STABILIZATION PIN.
6. PLACE AN ADEQUATE AMOUNT OF SILICON ADHESIVE ON THE BOTTOM WASHER OF THE CONNECTION PIN BEFORE INSERTING, TO HOLD IN PLACE AND PREVENT EASY HAND REMOVAL.

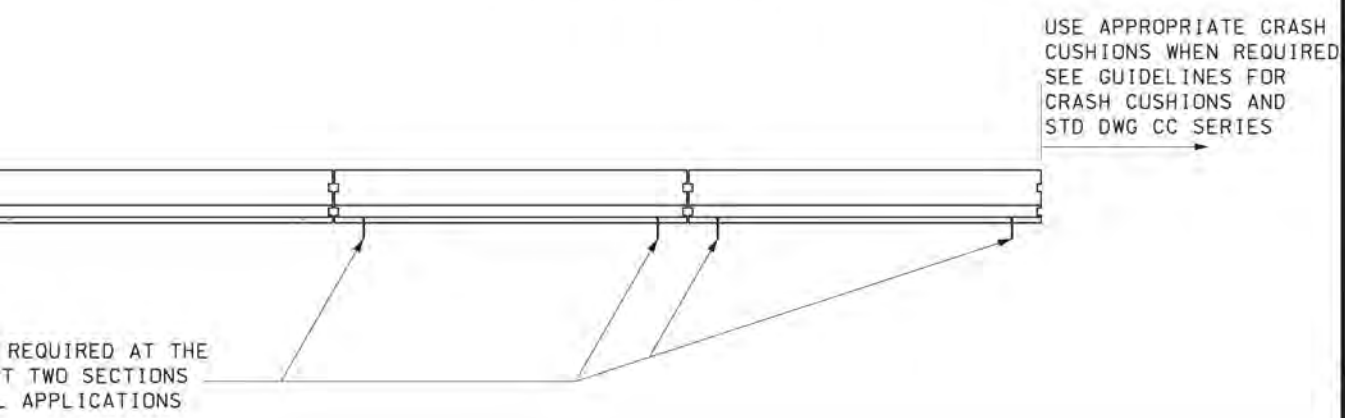


REVISIONS

| NO. | DATE | APPR. | REMARKS |
|---|---|---|---|
| | | | |

PORTATION
CONSTRUCTION

RECOMME — JAN.01.2005 DATE

CHAIRMA APPROVE — JAN.01.2005 DATE

DEPUTY DIRECTOR

STANDARD DRAWING TITLE

PRECAST CONCRETE
FULL SECTION
MEDIAN
INSTALLATION

STD DWG
BA 1D

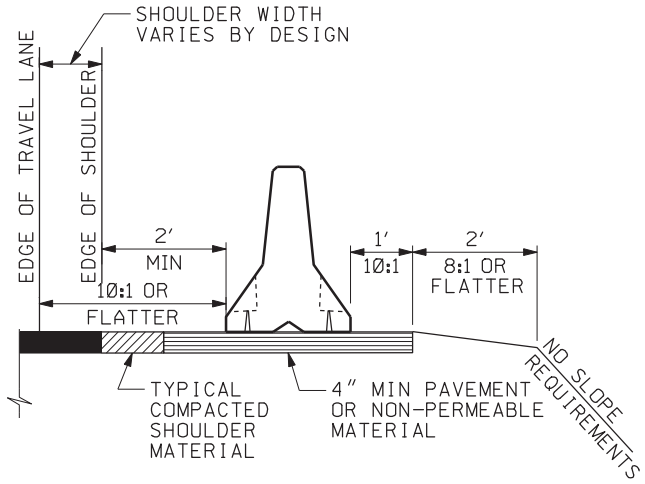


## SHOULDER INSTALLATION OPTION 1

NO STABILIZATION PINS REQUIRED

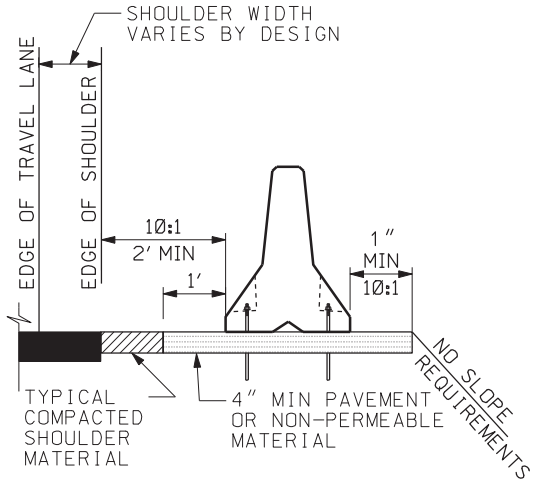


## SHOULDER INSTALLATION OPTION 2

STABILIZATION PINS REQUIRED

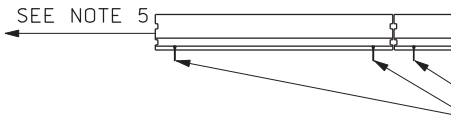


### FORMULAS FOR LENGTH OF NEED CALCULATIONS BURIED IN TERMINAL SECTION ONLY

**BACKSLOPE STEEPER THAN 3:1**

LON= FLR x D1

**BACKSLOPE 3:1 TO A MINIMUM 4:1**

≥ 50 MPH "LON"= 450 - (15 x D2)
≤ 45 MPH "LON"= 250 - (15 x D2)

LON: LENGTH OF NEED
FLR: BARRIER FLARE RATE
D1: DISTANCE FROM FACE OF BARRIER TO FACE OF HAZARD OR DITCH BOTTOM
D2: DISTANCE FROM EDGE OF TRAVEL LANE TO FACE OF HAZARD OR DITCH BOTTOM

### SECTION A-A

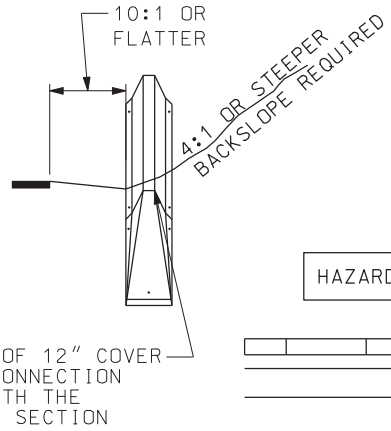


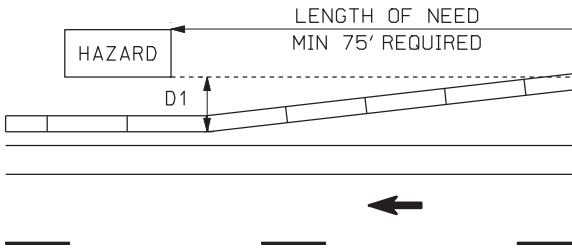


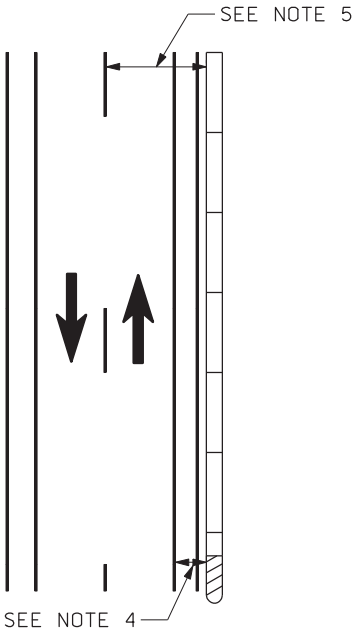


## TWO LANE/TWO WAY

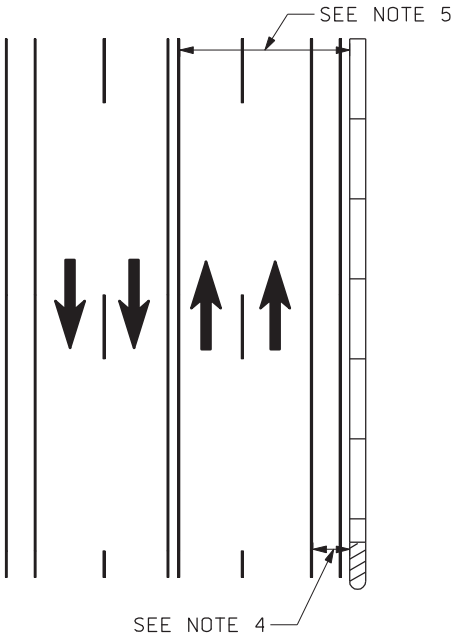


## MULTI-LANE ARTERIAL

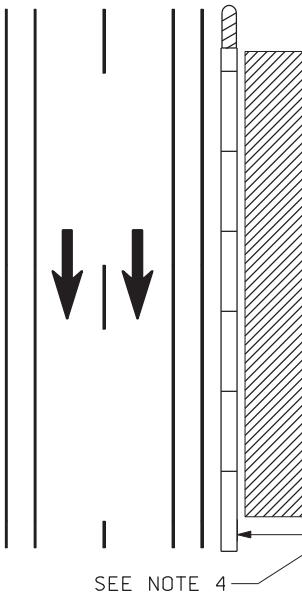


## MULTI-LANE A TRAVERSAB

DGN File:N:\Esd\Standard Drawings\Imperial\2005Approved\Barriers (BA)\ba01E.dgn
25-JAN-2005

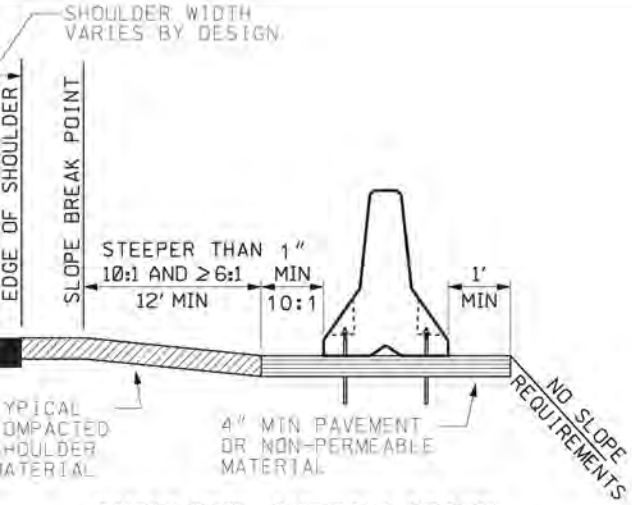


## SHOULDER INSTALLATION OPTION 3

STABILIZATION PINS REQUIRED

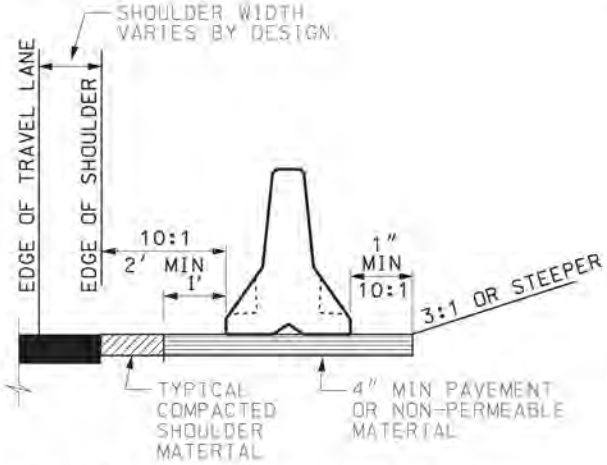


## SHOULDER INSTALLATION WITH 3:1 OR STEEPER BACKSLOPE

NO STABILIZATION PINS REQUIRED

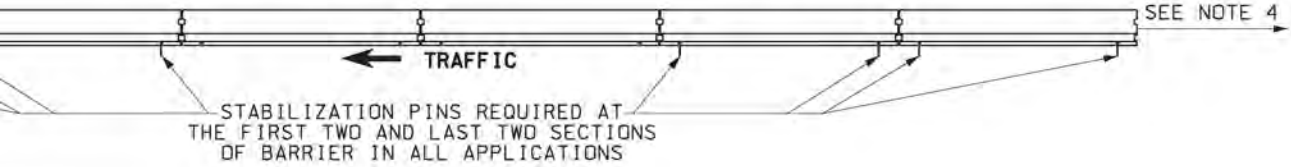


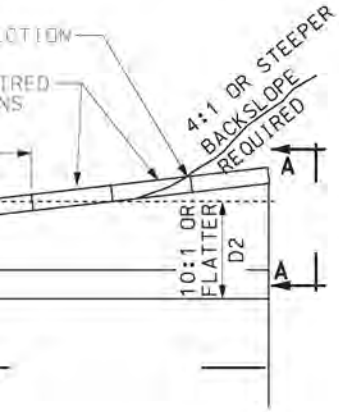


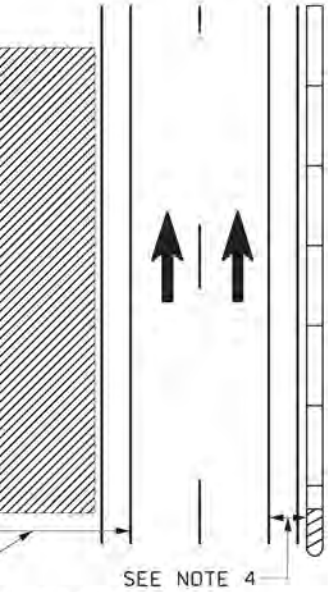


RTERIAL WITH
LE MEDIAN

## NOTES:

1. USE REQUIRED CLEAR ZONE FROM THE ROADSIDE DESIGN GUIDE, CURRENT EDITION. USE APPROPRIATE FLARE RATE AS SUGGESTED IN ROADSIDE GUIDE, CURRENT EDITION, FOR RIGID BARRIER SYSTEMS, WHEN BARRIER IS PLACED WITH A FLARE.
2. PLACE BARRIER ON A 4" PAVED OR NON-PERMEABLE SURFACE.
3. PIN ALL BARRIER SECTIONS TOGETHER AT CONNECTION LOOPS.
4. INSTALL APPROPRIATE CRASH CUSHION WHEN BARRIER END IS WITHIN 1.2 TIMES REQUIRED AASHTO CLEAR ZONE AND THE DESIGN SPEED IS GREATER THAN 40 MPH. TERMINAL SECTION (STD DWG BA 1C) USE PERMITTED FOR APPROACH TRAFFIC WHEN THE DESIGN SPEED FOR ROADWAY IS 40 MPH OR LESS. INSTALL TERMINAL SECTION (STD DWG BA 1C) WHEN THE APPROACH BARRIER END IS OUTSIDE 1.2 TIMES THE REQUIRED AASHTO CLEAR ZONE.
5. INSTALL APPROPRIATE CRASH CUSHION ON TRAILING END OF BARRIER WHEN BARRIER END IS WITHIN REQUIRED AASHTO CLEAR ZONE, AND THE DESIGN SPEED IS GREATER THAN 40 MPH. INSTALL TERMINAL SECTION (STD DWG BA 1C) WHEN BARRIER END IS OUTSIDE THE MINIMUM REQUIRED CLEAR ZONE BUT WITHIN 1.2 TIMES MAXIMUM THE REQUIRED AASHTO CLEAR ZONE.
6. THE CONCRETE BARRIER DESIGN ALLOWS FOR A 3' OUTWARD LATERAL MOVEMENT IF THE BARRIER IS STRUCK. STABILIZATION PINS ARE NOT REQUIRED WHEN USED ON A SHOULDER APPLICATION AND THE REQUIRED SLOPE OF 8:1 OR FLATTER EXIST 3' BEHIND THE BARRIER. USE STABILIZATION PINS WHEN THE SLOPES ARE STEEPER THAN 8:1 AND WITHIN 3' OF THE BARRIER BACKSIDE.
7. PRE-DRILL A 1" HOLE THROUGH THE PAVED SURFACE PRIOR TO INSTALLING THE STABILIZATION PIN.
8. DO NOT PLACE BARRIER ON TOP OF ANY CURBING.
9. DO NOT OVERLAY ANY MATERIAL PAST THE FIRST BREAK POINT ON THE BARRIER. THE FIRST BREAK POINT IS 3" FROM THE BOTTOM OF THE BARRIER.
10. PLACE AN ADEQUATE AMOUNT OF SILICON ADHESIVE ON THE BOTTOM WASHER OF THE CONNECTION PIN BEFORE INSERTING, TO HOLD IN PLACE AND PREVENT EASY HAND REMOVAL.

| NO. | DATE | APPR. | REMARKS |
|---|---|---|---|
| | | | |

REVISIONS

PORTATION
: CONSTRUCTION

RECOMME: JAN.01,2005 DATE
CHAIRMA APPROVE: JAN.01,2005 DATE
DEPUTY DIRECTOR

PRECAST CONCRETE FULL SECTION SHOULDER APPLICATIONS

STANDARD DRAWING TITLE

STD DWG
BA 1E

## APPROACH END (A)

SEE NOTE 4

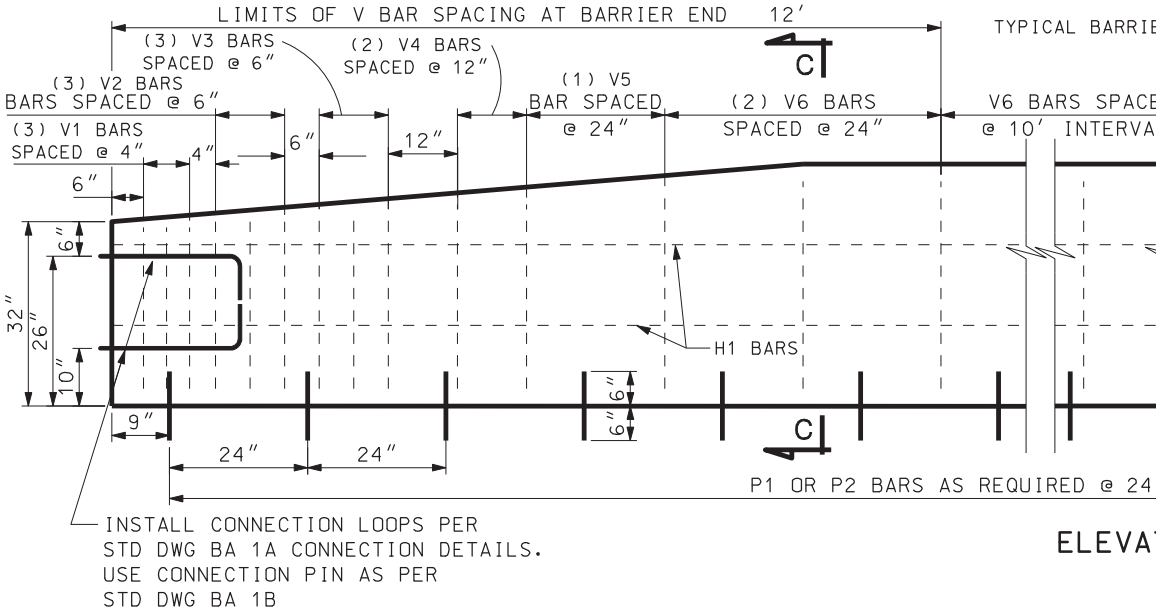


ELEVAT

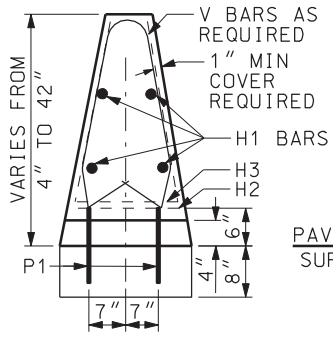


SECTION A-A

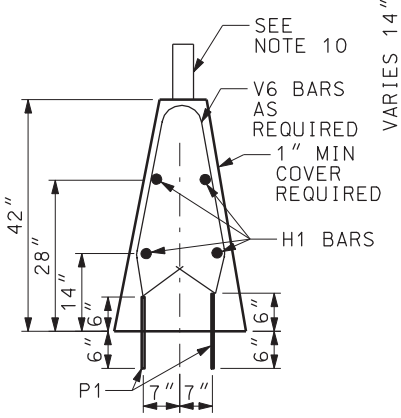


SECTION B-B

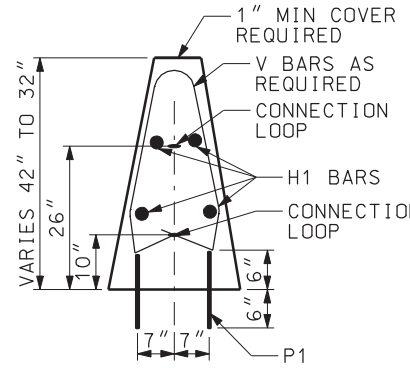


SECTION C-C

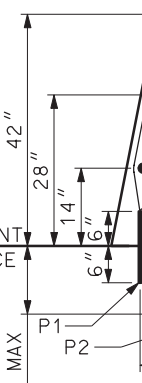


TYPICA

SEC
SE

## STEEL REINFORCEMENT TABLE

| MARK | BAR SIZE | (NO.) OF BARS | SKETCH |
|---|---|---|---|
| H1 | #5 | 4 OR 5 RUN THROUGH LENGTH OF BARRIER REQUIRED SPLICE LENGTH - 45″ | |
| H2 | #5 | TRAILING END SECTION (B) BOTTOM SIDE | 8′-3″; 1′-7″ |
| H3 | #5 | TRAILING END SECTION (B) TOP SIDE | 8′-3″; 6″; 1′-7″ |

| END OPTION | | (A) | (B) | (C) | D |
|---|---|---|---|---|---|
| V1 | #5 | 3 | | | 28″ |
| V2 | #5 | 3 | 1 | | 29″ |
| V3 | #5 | 3 | | | 30″ |
| V4 | #5 | 2 | 1 | | 32″ |
| V5 | #5 | 1 | | | 34″ |
| ✱ V6 | #5 | 2 | 3 | 14 | 36″ |
| V7 | #5 | | 1 | | 25″ |
| V8 | #5 | | 1 | | 22″ |
| V9 | #5 | | 1 | | 20″ |
| V10 | #5 | | 1 | | 18″ |
| V11 | #5 | | 1 | | 16″ |

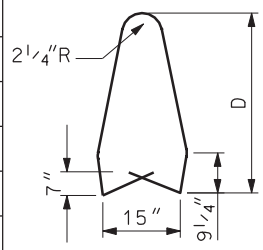


| | | | |
|---|---|---|---|
| P1 | #8 | BARRIER TO PAVEMENT | 12″ LONG PINS @ 24″ CENTERS |
| P2 | #8 | BARRIER TO PAVEMENT STEPPED PAVEMENT | 26″ LONG PINS @ 24″ CENTERS |

✱ V6 BARS SHOWN IN CHART ARE THE NUMBER OF BARS REQUIRED FOR EACH END OPTION.
SPACE V6 BARS AT 10′ INTERVALS THROUGH TYPICAL BARRIER SECTION.

DGN File: N:\Esd\Standard Drawings\Imperial\2005Approved\xChange1Approved\BA03A.dgn
25-APR-2005

## SLOPED TRAILING END (B)
## OPTION 1

SEE NOTE 4

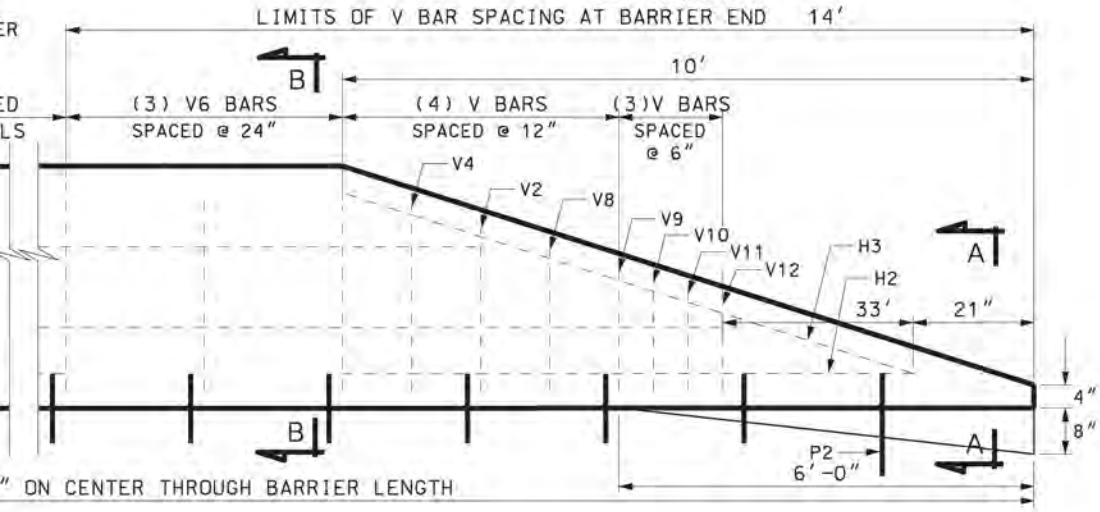


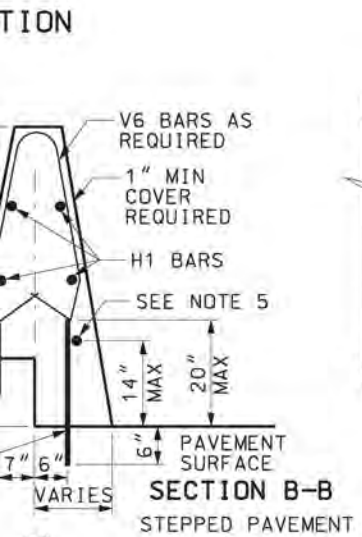


**SECTION B-B**

STEPPED PAVEMENT

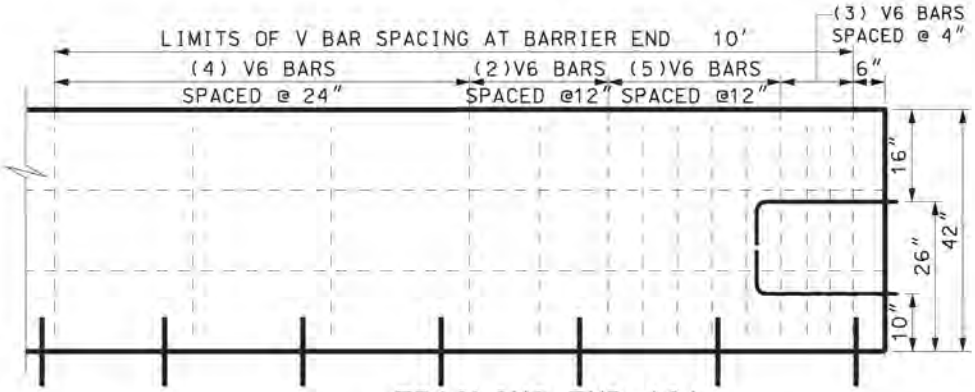


**TRAILING END (C)**
**OPTION 2**

SEE NOTES 4 & 8

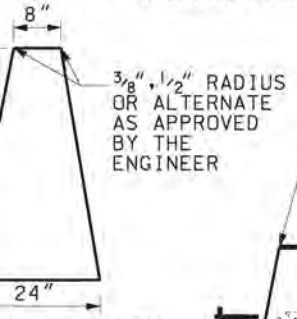


**AL SECTION**

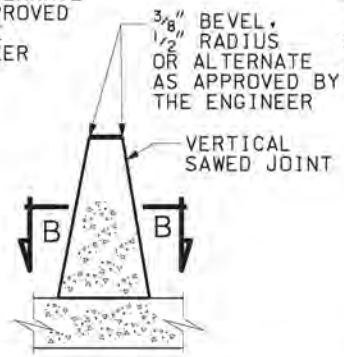


**SECTION THROUGH SAWED JOINT**

SEE NOTE 6

**TION B-B**

E NOTE 6

### NOTES:

1. THE ENGINEER APPROVES CONTRACTOR DEVISED METHOD OF POSITIONING THE LONGITUDINAL REINFORCING STEEL +/- 1/2" AS DIMENSIONED.
2. DO NOT USE TO SUPPORT HIGHWAY LIGHTING POLES. ADDITIONAL SUPPORT DETAILS REQUIRED.
3. DO NOT USE BARRIER FOR BRIDGE APPLICATIONS.
4. CHOOSE APPROPRIATE END TREATMENT:
   - A. CONSTRUCT APPROACH END AS PER DETAIL APPROACH END (A) WHEN CRASH CUSHION INSTALLATION IS REQUIRED.
   - B. CONSTRUCT TRAILING END AS PER DETAIL APPROACH END (A) WHEN CRASH CUSHION INSTALLATION IS REQUIRED.
   - C. CONSTRUCT SLOPED TRAILING END (B) WHEN BARRIER END DOES NOT REQUIRE A CRASH CUSHION, IS OUTSIDE THE MINIMUM REQUIRED CLEAR ZONE, BUT IS WITHIN 1.2 TIMES THE MINIMUM REQUIRED CLEAR ZONE OF APPROACH TRAFFIC.
   - D. USE OF SLOPED END PERMITTED FOR APPROACH TRAFFIC WHEN DESIGN SPEED IS 40 MPH OR LESS.
   - E. FULL HEIGHT BARRIER, TRAILING END OPTION (C), IS ACCEPTABLE WHEN THE END IS GREATER THAN 1.2 TIMES MINIMUM REQUIRED CLEAR ZONE OF APPROACH TRAFFIC.
5. ATTACH ADDITIONAL H1 BAR TO P2 BAR WHEN STEPPED PAVEMENT CONFIGURATION REQUIRED.
6. SAW CONTRACTION JOINTS AT PAVEMENT TRANSVERSE JOINTS. WHEN INSTALLED WITH ASPHALT PAVEMENT SAW CONTRACTION JOINTS AT 15' INTERVALS.
7. V6 BARS PER TRAILING END OPTION 2 AT BOTH SIDES OF CONSTRUCTION JOINT.
8. USE COATED REINFORCEMENT STEEL EXCEPT AS NOTED.
9. USE CLASS AA(AE) CONCRETE.
10. SEE STD DWG GW 9 FOR DELINEATION HARDWARE AND STD DWG GW 10 FOR DELINEATION SPACING.

REVISIONS

| NO. | DATE | APPR. | REMARKS |
|---|---|---|---|
| 1 | 02/24/05 | G.S. | REPLACED BA 3. |

PORTATION
: CONSTRUCTION

RECOMME — FEB.24,2005 DATE
CHAIRMA APPROVE — FEB.24,2005 DATE
DEPUTY DIRECTOR

CAST IN PLACE CONSTANT SLOPE BARRIER

STANDARD DRAWING TITLE

STD DWG
BA 3A

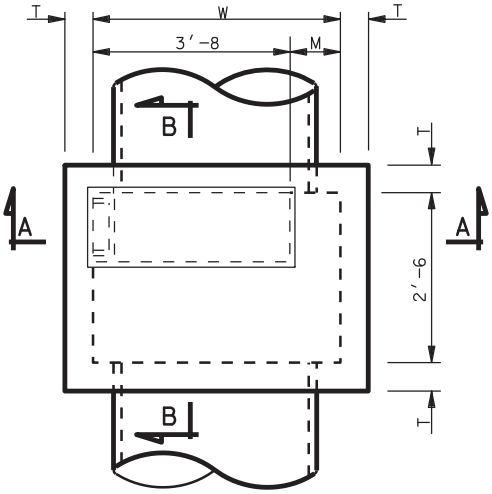


PLAN

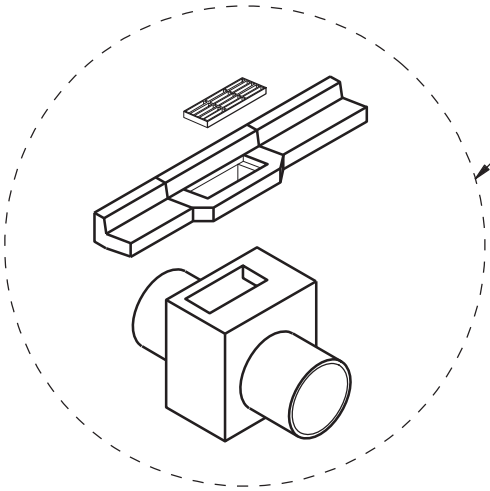

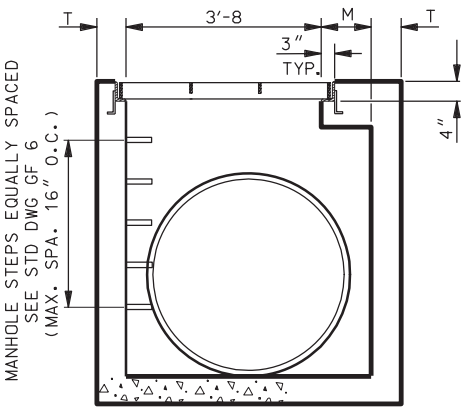


SECTION A-A

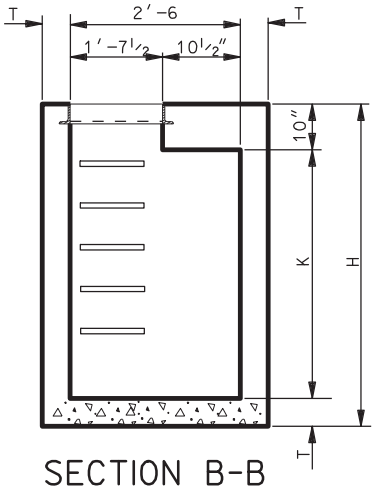


SECTION B-B

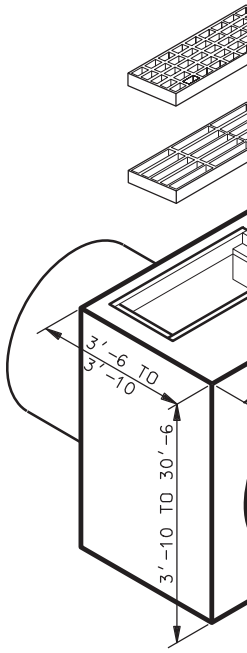


CATCH BASIN
GRATE AND FRAME APPLICATION

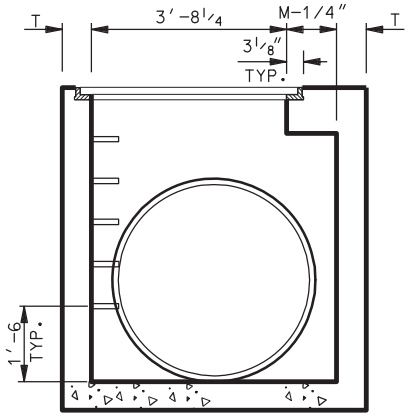


SECTION A-A

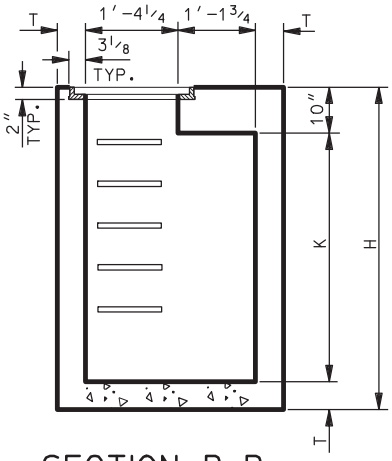


SECTION B-B

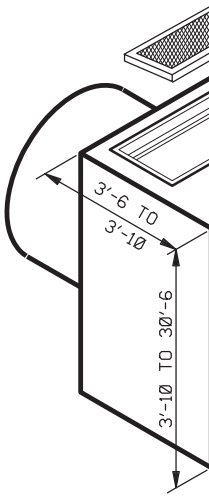


CLEANOUT BOX
SOLID COVER APPLICATION

DGN File:N:\Esd\Standard.Drawings\Imperial\2005Approved\Catch Basins and Cleanouts (CB)\cb10a.dgn
25-JAN-2005

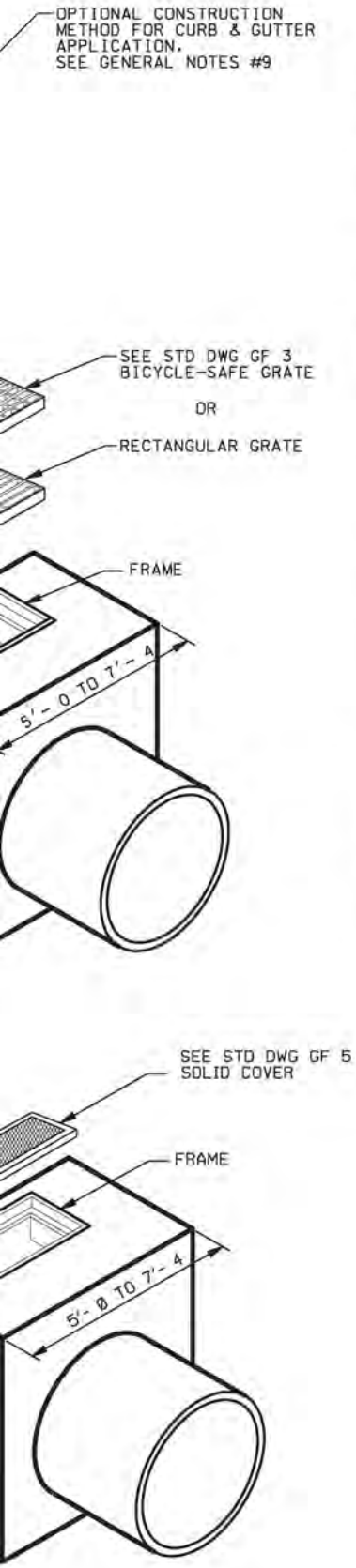


## GENERAL NOTES FOR CB 10A TO CB 10C

1. USE COATED DEFORMED BILLET REINFORCING STEEL BARS CONFORMING TO AASHTO M 284 OR M 111 AND M 31 GRADE 60 RESPECTIVELY.
2. USE TYPE II CEMENT (LOW ALKALI) UNLESS SPECIFIED OTHERWISE.
3. CHAMFER ALL EXPOSED CORNER ¾" EXCEPT WHERE NOTED OTHERWISE.
4. USE CONCRETE CLASS AA(AE) FOR ALL CAST-IN-PLACE CONCRETE EXCEPT WHERE SPECIFIED OTHERWISE.
5. PROVIDE 2" CONCRETE COVER TO REINFORCING STEEL EXCEPT WHERE NOTED OTHERWISE.
6. USE STRUCTURAL STEEL CONFORMING TO AASHTO M 270 GRADE 36 EXCEPT WHERE NOTED OTHERWISE.
7. SEE STD DWG GF 3 AND GF 5 FOR GRATING, FRAME AND SOLID COVER DETAILS.
8. SEE ROADWAY PLANS FOR DETAILS OF INSTALLATION, INCLUDING LOCATION OF UNITS NUMBER OF UNITS REQUIRED, TYPE OF UNITS, SIZE AND LOCATION OF PIPE(S).
9. FOR CURB & GUTTER APPLICATIONS ADJUST FINISH GRADE ELEVATION OF BOX AS REQUIRED. INCLUDE CONCRETE QUANTITIES FOR CURB & GUTTER IN ROADWAY QUANTITIES.
10. USE CLASS AA(AE) CAST-IN-PLACE CONCRETE EXCEPT WHERE SPECIFIED OTHERWISE.

## DESIGN DATA

HS-20-44 OR INTERSTATE ALTERNATE MILITARY LOADING IN ACCORDANCE WITH CURRENT AASHTO AND INTERIM SPECIFICATIONS.

CAST-IN-PLACE STRUCTURAL CONCRETE: Fc = 1,400 psi n = 8
REINF. STEEL: Fs = 24,000 psi
STRUCTURAL STEEL: Fs = 20,000 psi

## QUANTITIES

STRUCTURAL CONCRETE
REINFORCING STEEL
— SEE SCHEDULE OF INSTALLATION

## INDEX OF SHEETS

(CB 10A) 1- SITUATION & LAYOUT
(CB 10B) 2- SECTION DETAILS
(CB 10C) 3- SCHEDULE OF INSTALLATION FOR 42"-60" RCP. 48"-72" CMP.

REVISIONS

| NO. | DATE | APPR. | REMARKS |
|---|---|---|---|
| | | | |

RTATION
CONSTRUCTION

RECOMME: JAN.01.2005 DATE
CHAIRMA APPROVE: JAN.01.2005 DATE
DEPUTY DIRECTOR: DATE

STANDARD CATCH BASIN AND CLEANOUT BOX SITUATION AND LAYOUT

STANDARD DRAWING TITLE

STD DWG
CB 10A

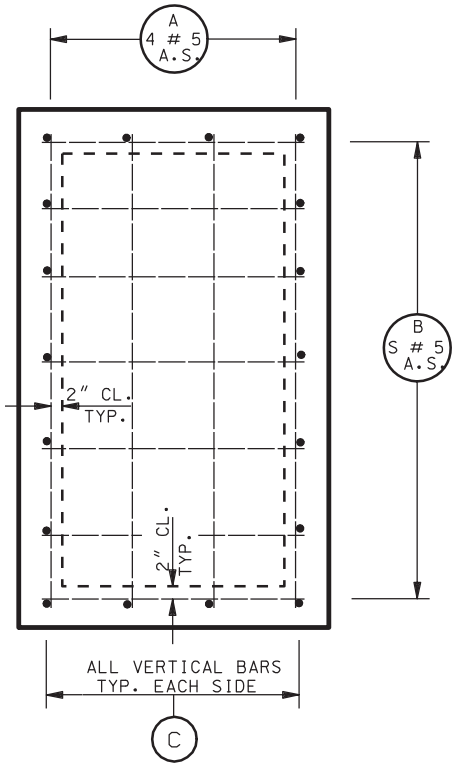


PLAN BOTTOM SLAB

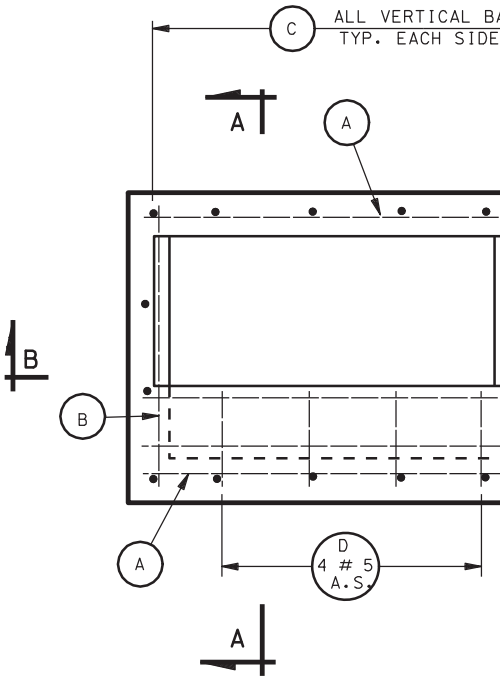


PLAN TOP SLAB

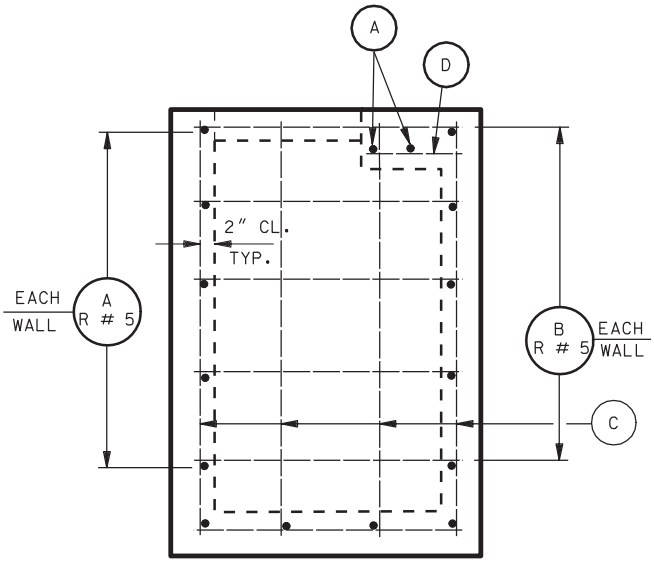


SECTION A-A

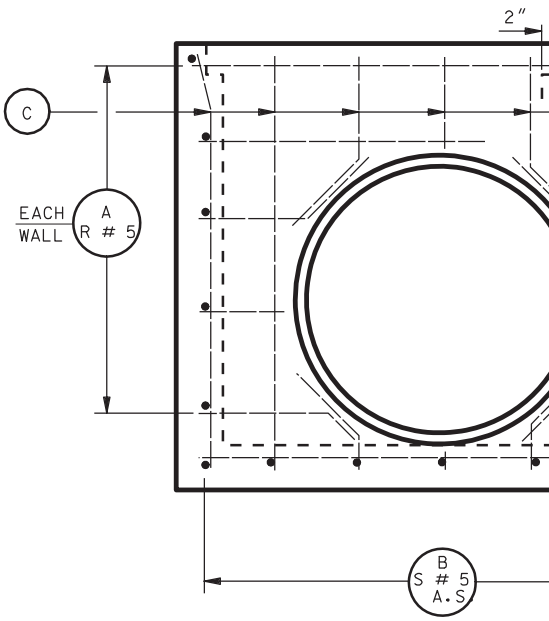


SECTION B-B

DGN File:N:\Esd\Standard.Drawings\Imperial\2005Approved\Catch Basins and Cleanouts (CB)\cb10b.dgn
25-JAN-2005

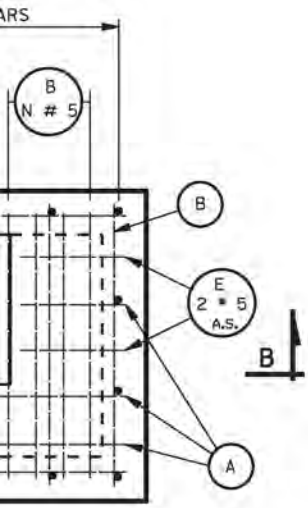


## NOTES:

1. QUANTITIES SHOWN IN THE SCHEDULE OF INSTALLATION ARE FOR ONE UNIT ONLY.
2. FORM THE BOTTOM SLAB OF THE BOX TO FIT THE INVERT OF THE PIPE(S) WHEN SO REQUIRED ACCORDING TO THE DETAIL SHOWN ON THIS SHEET. SEE TABLE 3 ON STD DWG CB 10C FOR ADDITIONAL CONCRETE QUANTITIES.
3. DEDUCT CONCRETE DISPLACED BY PIPE(S) FROM THOSE CONCRETE QUANTITIES GIVEN IN SCHEDULE OF TABLE 1 ON STD DWG CB 10C.
4. WHEN FORMED INVERT IS REQUIRED, SEE TABLE 3 ON STD DWG CB 10C FOR ADDITIONAL CONCRETE QUANTITIES.
5. PROVIDE 2" CONCRETE COVER TO REINFORCING STEEL EXCEPT WHERE NOTED OTHERWISE.
6. UNLESS OTHERWISE SHOWN, ALL DIMENSIONS ARE OUT TO OUT OF BARS.
7. WEIGHT QUANTITIES FOR GRATE AND FRAME, AND SOLID COVER AND FRAME ARE SHOWN FOR INFORMATION ONLY.
8. SEE STD DWG CB 10A FOR DIMENSIONS.
9. PIPE DIAMETERS SHOWN IN TABLES AND SCHEDULE ARE INSIDE DIAMETERS.
10. MAXIMUM PIPE DIMENSIONS SHOWN IN SCHEDULE OF INSTALLATION ARE FOR PIPES PERPENDICULAR TO WALLS OF BOX. DETERMINE CLEARANCES FOR SKEWED PIPES.
11. SEE STD DWG GF 6 FOR MANHOLE STEP DETAILS.
12. USE #5 BARS FOR ALL REINFORCING @ 12" UNLESS OTHERWISE SHOWN.
13. WHEN SOLID COVER IS REQUIRED, ADD .023 CU.YDS. OF CONCRETE TO THOSE QUANTITIES GIVEN IN SCHEDULE OF INSTALLATION AND ADD 3" TO EACH D-BAR, AND 1.0 LB TO REINFORCING STEEL QUANTITIES.
14. USE COATED DEFORMED BILLET REINFORCING STEEL BARS CONFORMING TO AASHTO M 284, OR M 111 AND M 31 GRADE 60 RESPECTIVELY.
15. CHAMFER ALL EXPOSED CONCRETE CORNERS 3/4" EXCEPT WHERE NOTED OTHERWISE.
16. USE CLASS AA(AE) CAST CONCRETE EXCEPT WHERE SPECIFIED OTHERWISE.

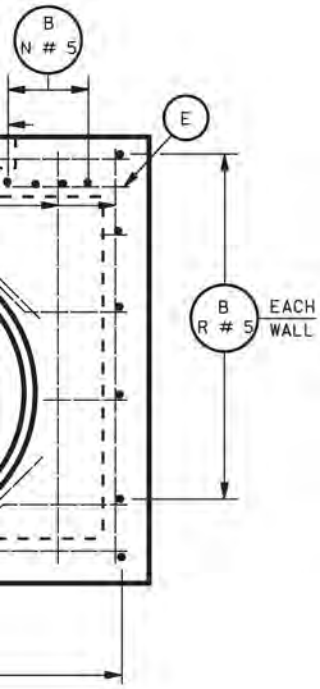


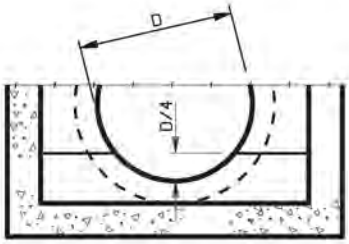


FORMED INVERT

| REVISIONS | | | | |
|---|---|---|---|---|
| NO. | DATE | APPR. | REMARKS | |

RTATION
CONSTRUCTION

JAN.01,2005
DATE

JAN.01,2005
DATE

S

RECOMME

CHAIRMA
APPROVE

DEPUTY DIRECTOR

STANDARD CATCH BASIN AND CLEANOUT BOX SECTION DETAILS

STANDARD DRAWING TITLE

STD DWG

CB 10B

| LINE | NO. of MANHOLE STEPS | R | COLUMN "A" DIMENSIONS H | K | T | REINFORCING STEEL A LENGTH | A NO | B LENGTH | B NO | C NO.=16 LENGTH | D NO.=4 LENGTH | QUANTITIES CONC. CU. YD. | REINF. STEEL LBS. |
|---|---|---|---|---|---|---|---|---|---|---|---|---|---|
| 1 | -- | 4 | 3'-10 | 2'-6 | 6" | 4'-8 | 14 | 3'-2 | 15 | 3'-5 | 1'-0 | 1.365 | 179 |
| 2 | 2 | 4 | 4'-4 | 3'-0 | | | 14 | | 15 | 3'-11 | | 1.504 | 187 |
| 3 | 2 | 5 | 4'-10 | 3'-6 | | | 16 | | 17 | 4'-5 | | 1.642 | 212 |
| 4 | 3 | 5 | 5'-4 | 4'-0 | | | 16 | | 17 | 4'-11 | | 1.781 | 220 |
| 5 | 3 | 6 | 5'-10 | 4'-6 | | | 18 | | 19 | 5'-5 | | 1.920 | 245 |
| 6 | 4 | 6 | 6'-4 | 5'-0 | | | 18 | | 19 | 5'-11 | | 2.059 | 253 |
| 7 | 4 | 7 | 6'-10 | 5'-6 | | | 20 | | 21 | 6'-5 | | 2.198 | 278 |
| 8 | 5 | 7 | 7'-4 | 6'-0 | | | 20 | | 21 | 6'-11 | | 2.337 | 286 |
| 9 | 5 | 8 | 7'-10 | 6'-6 | | | 22 | | 23 | 7'-5 | | 2.476 | 311 |
| 10 | 6 | 8 | 8'-4 | 7'-0 | | | 22 | | 23 | 7'-11 | | 2.615 | 319 |
| 11 | 6 | 9 | 8'-10 | 7'-6 | | | 24 | | 25 | 8'-5 | | 2.754 | 344 |
| 12 | 7 | 9 | 9'-4 | 8'-0 | | | 24 | | 25 | 8'-11 | | 2.892 | 352 |
| 13 | 7 | 10 | 9'-10 | 8'-6 | | | 26 | | 27 | 9'-5 | | 3.031 | 377 |
| 14 | 8 | 10 | 10'-4 | 9'-0 | | | 26 | | 27 | 9'-11 | | 3.170 | 385 |
| 15 | 8 | 11 | 10'-10 | 9'-6 | | | 28 | | 29 | 10'-5 | | 3.309 | 410 |
| 16 | 9 | 11 | 11'-4 | 10'-0 | | | 28 | | 29 | 10'-11 | | 3.448 | 418 |
| 17 | 9 | 12 | 11'-10 | 10'-6 | | | 30 | | 31 | 11'-5 | | 3.587 | 443 |
| 18 | 10 | 12 | 12'-4 | 11'-0 | 6" | 4'-8 | 30 | 3'-2 | 31 | 11'-11 | 1'-0 | 3.726 | 451 |
| 19 | 10 | 13 | 12'-11 | 11'-6 | 7" | 4'-10 | 32 | 3'-4 | 33 | 12'-6 | 1'-1 | 4.610 | 489 |
| 20 | 11 | 13 | 13'-5 | 12'-0 | | | 32 | | 33 | 13'-0 | | 4.775 | 498 |
| 21 | 11 | 14 | 13'-11 | 12'-6 | | | 34 | | 35 | 13'-6 | | 4.941 | 523 |
| 22 | 12 | 14 | 14'-5 | 13'-0 | | | 34 | | 35 | 14'-0 | | 5.107 | 531 |
| 23 | 12 | 15 | 14-11 | 13'-6 | | | 36 | | 37 | 14'-6 | | 5.272 | 552 |
| 24 | 13 | 15 | 15'-5 | 14'-0 | | | 36 | | 37 | 15'-0 | | 5.438 | 565 |
| 25 | 13 | 16 | 15'-11 | 14'-6 | | | 38 | | 39 | 15'-6 | | 5.604 | 590 |
| 26 | 14 | 16 | 16'-5 | 15'-0 | | | 38 | | 39 | 16'-0 | | 5.769 | 599 |
| 27 | 14 | 17 | 16-11 | 15'-6 | | | 40 | | 41 | 16'-6 | | 5.935 | 624 |
| 28 | 15 | 17 | 17'-5 | 16'-0 | | | 40 | | 41 | 17'-0 | | 6.100 | 632 |
| 29 | 15 | 18 | 17'-11 | 16'-6 | | | 42 | | 43 | 17'-6 | | 6.266 | 658 |
| 30 | 16 | 18 | 18'-5 | 17'-0 | | | 42 | | 43 | 18'-0 | | 6.432 | 666 |
| 31 | 16 | 19 | 18'-11 | 17'-6 | | | 44 | | 45 | 18'-6 | | 6.597 | 692 |
| 32 | 17 | 19 | 19'-5 | 18'-0 | | | 44 | | 45 | 19'-0 | | 6.763 | 700 |
| 33 | 17 | 20 | 19'-11 | 18'-6 | | | 46 | | 47 | 19'-6 | | 6.929 | 725 |
| 34 | 18 | 20 | 20'-5 | 19'-0 | | | 46 | | 47 | 20'-0 | | 7.094 | 734 |
| 35 | 18 | 21 | 20'-11 | 19'-6 | | | 48 | | 49 | 20'-6 | | 7.260 | 759 |
| 36 | 19 | 21 | 21'-5 | 20'-0 | | | 48 | | 49 | 21'-0 | | 7.426 | 767 |
| 37 | 19 | 22 | 21'-11 | 20'-6 | | | 50 | | 51 | 21'-6 | | 7.591 | 793 |
| 38 | 20 | 22 | 22'-5 | 21'-0 | 7" | 4'-10 | 50 | 3'-4 | 51 | 22'-0 | 1'-1 | 7.757 | 801 |
| 39 | 20 | 23 | 23'-0 | 21'-6 | 8" | 5'-0 | 52 | 3'-6 | 53 | 22'-7 | 1'-2 | 9.259 | 846 |
| 40 | 21 | 23 | 23'-6 | 22'-0 | | | 52 | | 53 | 23'-1 | | 9.452 | 855 |
| 41 | 21 | 24 | 24'-0 | 22'-6 | | | 54 | | 55 | 23'-7 | | 9.646 | 881 |
| 42 | 22 | 24 | 24'-6 | 23'-0 | | | 54 | | 55 | 24'-1 | | 9.839 | 889 |
| 43 | 22 | 25 | 25'-0 | 23'-6 | | | 56 | | 57 | 24'-7 | | 10.032 | 915 |
| 44 | 23 | 25 | 25'-6 | 24'-0 | | | 56 | | 57 | 25'-1 | | 10.226 | 924 |
| 45 | 23 | 26 | 26'-0 | 24'-6 | | | 58 | | 59 | 25'-7 | | 10.419 | 950 |
| 46 | 24 | 26 | 26'-6 | 25'-0 | | | 58 | | 59 | 26'-1 | | 10.613 | 958 |
| 47 | 24 | 27 | 27'-0 | 25'-6 | | | 60 | | 61 | 26'-7 | | 10.806 | 984 |
| 48 | 25 | 27 | 27'-6 | 26'-0 | | | 60 | | 61 | 27'-1 | | 11.000 | 992 |
| 49 | 25 | 28 | 28'-0 | 26'-6 | | | 62 | | 63 | 27'-7 | | 11.193 | 1018 |
| 50 | 26 | 28 | 28'-6 | 27'-0 | | | 62 | | 63 | 28'-1 | | 11.386 | 1027 |
| 51 | 26 | 29 | 29'-0 | 27'-6 | | | 64 | | 65 | 28'-7 | | 11.580 | 1053 |
| 52 | 27 | 29 | 29'-6 | 28'-0 | | | 64 | | 65 | 29'-1 | | 11.773 | 1055 |
| 53 | 27 | 30 | 30'-0 | 28'-6 | | | 66 | | 67 | 29'-7 | | 11.967 | 1087 |
| 54 | 28 | 30 | 30'-6 | 29'-0 | 8" | 5'-0 | 66 | 3'-6 | 67 | 30'-1 | 1'-2 | 12.160 | 1096 |

N=1 S=6 W=4'-0 M=0'-4

| LINE | COLUMN "B" DIMENSIONS H | K | T | REINFORCING STEEL A LENGTH | A NO | B LENGTH | B NO | C NO.=18 LENGTH | D NO.=4 LENGTH | E NO.=2 LENGTH | QUANTITIES CONC. CU. YD. | REINF. STEEL LBS. |
|---|---|---|---|---|---|---|---|---|---|---|---|---|
| 1 | ---- | | --- | ---- | -- | --- | -- | ---- | --- | --- | ---- | ---- |
| 2 | ---- | | --- | ---- | -- | --- | -- | ---- | --- | --- | ---- | ---- |
| 3 | ---- | | --- | ---- | -- | --- | -- | ---- | --- | --- | ---- | ---- |
| 4 | ---- | | --- | ---- | -- | --- | -- | ---- | --- | --- | ---- | ---- |
| 5 | ---- | | --- | ---- | -- | --- | -- | ---- | --- | --- | ---- | ---- |
| 6 | 6'-4 | 5'-0 | 6" | 5'-8 | 18 | 3'-2 | 23 | 5'-11 | 1'-0 | 1'-6 | 2.417 | 301 |
| 7 | 6'-10 | 5'-6 | | | 20 | | 25 | 6'-5 | | | 2.575 | 321 |
| 8 | 7'-4 | 6'-0 | | | 20 | | 25 | 6'-11 | | | 2.732 | 338 |
| 9 | 7'-10 | 6'-6 | | | 22 | | 27 | 7'-5 | | | 2.889 | 366 |
| 10 | 8'-4 | 7'-0 | | | 22 | | 27 | 7'-11 | | | 3.047 | 375 |
| 11 | 8'-10 | 7'-6 | | | 24 | | 29 | 8'-5 | | | 3.204 | 403 |
| 12 | 9'-4 | 8'-0 | | | 24 | | 29 | 8'-11 | | | 3.362 | 412 |
| 13 | 9'-10 | 8'-6 | | | 26 | | 31 | 9'-5 | | | 3.519 | 440 |
| 14 | 10'-4 | 9'-0 | | | 26 | | 31 | 9'-11 | | | 3.675 | 450 |
| 15 | 10'-10 | 9'-6 | | | 28 | | 33 | 10'-5 | | | 3.834 | 477 |
| 16 | 11'-4 | 10'-0 | | | 28 | | 33 | 10'-11 | | | 3.991 | 486 |
| 17 | 11'-10 | 10'-6 | | | 30 | | 35 | 11'-5 | | | 4.149 | 515 |
| 18 | 12'-4 | 11'-0 | 6" | 5'-8 | 30 | 3'-2 | 35 | 11'-11 | 1'-0 | 1'-6 | 4.305 | 524 |
| 19 | 12'-11 | 11'-6 | 7" | 5'-10 | 32 | 3'-4 | 37 | 12'-6 | 1'-1 | 1'-7 | 5.299 | 566 |
| 20 | 13'-5 | 12'-0 | | | 32 | | 37 | 13'-0 | | | 5.486 | 575 |
| 21 | 13'-11 | 12'-6 | | | 34 | | 39 | 13'-6 | | | 5.673 | 604 |
| 22 | 14'-5 | 13'-0 | | | 34 | | 39 | 14'-0 | | | 5.861 | 613 |
| 23 | 14'-11 | 13'-6 | | | 36 | | 41 | 14'-6 | | | 6.048 | 642 |
| 24 | 15'-5 | 14'-0 | | | 36 | | 41 | 15'-0 | | | 6.235 | 651 |
| 25 | 15'-11 | 14'-6 | | | 38 | | 43 | 15'-6 | | | 6.422 | 680 |
| 26 | 16'-5 | 15'-0 | | | 38 | | 43 | 16'-0 | | | 6.609 | 689 |
| 27 | 16'-11 | 15'-6 | | | 40 | | 45 | 16'-6 | | | 6.797 | 637 |
| 28 | 17'-5 | 16'-0 | | | 40 | | 45 | 17'-0 | | | 6.984 | 727 |
| 29 | 17'-11 | 16'-6 | | | 42 | | 47 | 17'-6 | | | 7.171 | 755 |
| 30 | 18'-5 | 17'-0 | | | 42 | | 47 | 18'-0 | | | 7.358 | 765 |
| 31 | 18'-11 | 17'-6 | | | 44 | | 49 | 18'-6 | | | 7.545 | 793 |
| 32 | 19'-5 | 18'-0 | | | 44 | | 49 | 19'-0 | | | 7.733 | 803 |
| 33 | 19'-11 | 18'-6 | | | 46 | | 51 | 19'-6 | | | 7.920 | 831 |
| 34 | 20'-5 | 19'-0 | | | 46 | | 51 | 20'-0 | | | 8.107 | 841 |
| 35 | 20'-11 | 19'-6 | | | 48 | | 53 | 20'-6 | | | 8.294 | 869 |
| 36 | 21'-5 | 20'-0 | | | 48 | | 53 | 21'-0 | | | 8.481 | 878 |
| 37 | 21'-11 | 20'-6 | | | 50 | | 55 | 21'-6 | | | 8.669 | 907 |
| 38 | 22'-5 | 21'-0 | 7" | 5'-10 | 50 | 3'-4 | 55 | 22'-0 | 1'-1 | 1'-7 | 8.856 | 916 |
| 39 | 23'-0 | 21'-6 | 8" | 6'-0 | 52 | 3'-6 | 57 | 22'-7 | 1'-2 | 1'-8 | 10.533 | 966 |
| 40 | 23'-6 | 22'-0 | | | 52 | | 57 | 23'-1 | | | 10.752 | 975 |
| 41 | 24'-0 | 22'-6 | | | 54 | | 59 | 23'-7 | | | 10.970 | 1004 |
| 42 | 24'-6 | 23'-0 | | | 54 | | 59 | 24'-1 | | | 11.188 | 1014 |
| 43 | 25'-0 | 23'-6 | | | 56 | | 61 | 24'-7 | | | 11.406 | 1043 |
| 44 | 25'-6 | 24'-0 | | | 56 | | 61 | 25'-1 | | | 11.629 | 1052 |
| 45 | 26'-0 | 24'-6 | | | 58 | | 63 | 25'-7 | | | 11.842 | 1082 |
| 46 | 26'-6 | 25'-0 | | | 58 | | 63 | 26'-1 | | | 12.060 | 1091 |
| 47 | 27'-0 | 25'-6 | | | 60 | | 65 | 26'-7 | | | 12.278 | 1120 |
| 48 | 27'-6 | 26'-0 | | | 60 | | 65 | 27'-1 | | | 12.496 | 1130 |
| 49 | 28'-0 | 26'-6 | | | 62 | | 67 | 27'-7 | | | 12.714 | 1159 |
| 50 | 28'-6 | 27'-0 | | | 62 | | 67 | 28'-1 | | | 12.933 | 1168 |
| 51 | 29'-0 | 27'-6 | | | 64 | | 69 | 28'-7 | | | 13.151 | 1197 |
| 52 | 29'-6 | 28'-0 | | | 64 | | 69 | 29'-1 | | | 13.369 | 1207 |
| 53 | 30'-0 | 28'-6 | | | 66 | | 71 | 29'-7 | | | 13.587 | 1236 |
| 54 | 30'-6 | 29'-0 | 8" | 6'-0 | 66 | 3'-6 | 71 | 30'-1 | 1'-2 | 1'-8 | 13.805 | 1245 |

N=4 S=7 W=5'-0 M=1'-4

TABLE 1 : CONCRETE DISPLACED BY PIPES:

| PIPE SIZES R.C.P. | C.M.P. | 6" CU. YD. | 7" CU. YD. | 8" CU. YD. |
|---|---|---|---|---|
| 42" | 48" | 0.233 | 0.271 | 0.310 |
| 48" | 60" | 0.340 | 0.396 | 0.453 |
| 54" | 66" | 0.427 | 0.498 | 0.569 |
| 60" | 72" | 0.524 | 0.611 | 0.698 |
| | 54" | 0.295 | 0.344 | 0.393 |

TABLE 2 : MAXIMUM PIPE SIZE TO BE USED:

| | R.C.P. | C.M.P. |
|---|---|---|
| COLUMN A | 42" | 48" |
| COLUMN B | 48" | 60" |
| COLUMN C | 54" | 66" |
| COLUMN D | 60" | 72" |

TABLE 3 : CON

| PIPES SIZES | R.C.P. CU. YD. |
|---|---|
| 42" | 0.273 |
| 48" | 0.428 |
| 54" | ---- |
| 60" | 0.617 |
| 66" | ---- |
| 72" | ---- |

DGN File: N:\Esd\Standard_Drawings\Imperial\2005Approved\Catch Basins and Cleanouts (CB)\cb10cudgn
25-JAN-2005

## COLUMN "C"

| DIMENSIONS H | DIMENSIONS K | DIMENSIONS T | REINFORCING STEEL A LENGTH | A NO | B LENGTH | B NO | C NO.=16 LENGTH | D NO.=4 LENGTH | E NO.=2 LENGTH | QUANTITIES CONC. CU. YD. | QUANTITIES REINF. STEEL LBS. | LINE |
|---|---|---|---|---|---|---|---|---|---|---|---|---|
| ---- | ---- | --- | ---- | -- | ---- | -- | ---- | ---- | ---- | ---- | ---- | 1 |
| ---- | ---- | --- | ---- | -- | ---- | -- | ---- | ---- | ---- | ---- | ---- | 2 |
| ---- | ---- | --- | ---- | -- | ---- | -- | ---- | ---- | ---- | ---- | ---- | 3 |
| ---- | ---- | --- | ---- | -- | ---- | -- | ---- | ---- | ---- | ---- | ---- | 4 |
| ---- | ---- | --- | ---- | -- | ---- | -- | ---- | ---- | ---- | ---- | ---- | 5 |
| ---- | ---- | --- | ---- | -- | ---- | -- | ---- | ---- | ---- | ---- | ---- | 6 |
| '-10 | 5'-6 | 6" | 6'-2 | 20 | 3'-2 | 26 | 6'-5 | 1'-0 | 2'-0 | 2.763 | 343 | 7 |
| '-4 | 6'-0 | | | 20 | | 26 | 6'-11 | | | 2.930 | 353 | 8 |
| '-10 | 6'-6 | | | 22 | | 28 | 7'-5 | | | 3.096 | 382 | 9 |
| 3'-4 | 7'-0 | | | 22 | | 28 | 7'-11 | | | 3.263 | 391 | 10 |
| '-10 | 7'-6 | | | 24 | | 30 | 8'-5 | | | 3.430 | 420 | 11 |
| 9'-4 | 8'-0 | | | 24 | | 30 | 8'-11 | | | 3.596 | 429 | 12 |
| '-10 | 8'-6 | | | 26 | | 32 | 9'-5 | | | 3.763 | 458 | 13 |
| 0'-4 | 9'-0 | | | 26 | | 32 | 9'-11 | | | 3.930 | 467 | 14 |
| '-10 | 9'-6 | | | 28 | | 34 | 10'-5 | | | 4.096 | 496 | 15 |
| 1'-4 | 10'-0 | | | 28 | | 34 | 10'-11 | | | 4.263 | 506 | 16 |
| '-10 | 10'-6 | | | 30 | | 36 | 11'-5 | | | 4.430 | 535 | 17 |
| 2'-4 | 11'-0 | 6" | 6'-2 | 30 | 3'-2 | 36 | 11'-11 | 1'-0 | 2'-0 | 4.596 | 544 | 18 |
| '-11 | 11'-6 | 7" | 6'-4 | 32 | 3'-4 | 38 | 12'-6 | 1'-1 | 2'-1 | 5.644 | 587 | 19 |
| 3'-5 | 12'-0 | | | 32 | | 38 | 13'-0 | | | 5.842 | 596 | 20 |
| '-11 | 12'-6 | | | 34 | | 40 | 13'-6 | | | 6.040 | 626 | 21 |
| 4'-5 | 13'-0 | | | 34 | | 40 | 14'-0 | | | 6.238 | 635 | 22 |
| '-11 | 13'-6 | | | 36 | | 42 | 14'-6 | | | 6.436 | 665 | 23 |
| 5'-5 | 14'-0 | | | 36 | | 42 | 15'-0 | | | 6.634 | 674 | 24 |
| '-11 | 14'-6 | | | 38 | | 44 | 15'-6 | | | 6.832 | 704 | 25 |
| 6'-5 | 15'-0 | | | 38 | | 44 | 16'-0 | | | 7.030 | 713 | 26 |
| '-11 | 15'-6 | | | 40 | | 46 | 16'-6 | | | 7.228 | 743 | 27 |
| 7'-5 | 16'-0 | | | 40 | | 46 | 17'-0 | | | 7.426 | 752 | 28 |
| '-11 | 16'-6 | | | 42 | | 48 | 17'-6 | | | 7.624 | 782 | 29 |
| 8'-5 | 17'-0 | | | 42 | | 48 | 18'-0 | | | 7.822 | 791 | 30 |
| '-11 | 17'-0 | | | 44 | | 50 | 18'-6 | | | 8.020 | 821 | 31 |
| 9'-5 | 18'-0 | | | 44 | | 50 | 19'-0 | | | 8.215 | 830 | 32 |
| 9'-11 | 18'-6 | | | 46 | | 52 | 19'-6 | | | 8.416 | 860 | 33 |
| 0'-5 | 19'-0 | | | 46 | | 52 | 20'-0 | | | 8.615 | 869 | 34 |
| 0'-11 | 19'-6 | | | 48 | | 54 | 20'-6 | | | 8.812 | 899 | 35 |
| 1'-5 | 20'-0 | | | 48 | | 54 | 21'-0 | | | 9.011 | 908 | 36 |
| 1'-11 | 20'-6 | | | 50 | | 56 | 21'-6 | | | 9.209 | 937 | 37 |
| 2'-5 | 21'-0 | 7" | 6'-4 | 50 | 3'-4 | 56 | 22'-0 | 1'-1 | 2'-1 | 9.407 | 946 | 38 |
| 3'-0 | 21'-6 | 8" | 6'-6" | 52 | 3'-6 | 58 | 22'-7 | 1'-2 | 2'-2 | 11.171 | 998 | 39 |
| 3'-6 | 22'-0 | | | 52 | | 58 | 23'-1 | | | 11.401 | 1007 | 40 |
| 4'-0 | 22'-6 | | | 54 | | 60 | 23'-7 | | | 11.632 | 1037 | 41 |
| 4'-6 | 23'-0 | | | 54 | | 60 | 24'-1 | | | 11.862 | 1047 | 42 |
| 5'-0 | 23'-6 | | | 56 | | 62 | 24'-7 | | | 12.093 | 1077 | 43 |
| 5'-6 | 24'-0 | | | 56 | | 62 | 25'-1 | | | 12.323 | 1086 | 44 |
| 6'-0 | 24'-6 | | | 58 | | 64 | 25'-7 | | | 12.554 | 1117 | 45 |
| 6'-6 | 25'-0 | | | 58 | | 64 | 26'-1 | | | 12.784 | 1126 | 46 |
| 7'-0 | 25'-6 | | | 60 | | 66 | 26'-7 | | | 13.015 | 1156 | 47 |
| 7'-6 | 26'-0 | | | 60 | | 66 | 27'-1 | | | 13.245 | 1166 | 48 |
| 8'-0 | 26'-6 | | | 62 | | 68 | 27'-7 | | | 13.476 | 1196 | 49 |
| 8'-6 | 27'-0 | | | 62 | | 68 | 28'-1 | | | 13.706 | 1205 | 50 |
| 9'-0 | 27'-6 | | | 64 | | 70 | 28'-7 | | | 13.937 | 1235 | 51 |
| 9'-6 | 28'-0 | | | 64 | | 70 | 29'-1 | | | 14.167 | 1245 | 52 |
| 0'-0 | 28'-6 | | | 66 | | 72 | 29'-7 | | | 14.398 | 1275 | 53 |
| 0'-6 | 29'-0 | 8" | 6'-6 | 66 | 3'-6 | 72 | 30'-1 | 1'-2 | 2'-2 | 14.628 | 1285 | 54 |

N=5 S=7 W=5'-5 M=1'-10

## COLUMN "D"

| DIMENSIONS H | DIMENSIONS K | DIMENSIONS T | REINFORCING STEEL A LENGTH | A NO | B LENGTH | B NO | C NO.=20 LENGTH | D NO.=4 LENGTH | E NO.=2 LENGTH | QUANTITIES CONC. CU. YD. | QUANTITIES REINF. STEEL LBS. | LINE |
|---|---|---|---|---|---|---|---|---|---|---|---|---|
| ---- | ---- | --- | ---- | -- | ---- | -- | ---- | ---- | ---- | ---- | ---- | 1 |
| ---- | ---- | --- | ---- | -- | ---- | -- | ---- | ---- | ---- | ---- | ---- | 2 |
| ---- | ---- | --- | ---- | -- | ---- | -- | ---- | ---- | ---- | ---- | ---- | 3 |
| ---- | ---- | --- | ---- | -- | ---- | -- | ---- | ---- | ---- | ---- | ---- | 4 |
| ---- | ---- | --- | ---- | -- | ---- | -- | ---- | ---- | ---- | ---- | ---- | 5 |
| ---- | ---- | --- | ---- | -- | ---- | -- | ---- | ---- | ---- | ---- | ---- | 6 |
| ---- | ---- | --- | ---- | -- | ---- | -- | ---- | ---- | ---- | ---- | ---- | 7 |
| 7'-4 | 6'-0 | 6" | 6'-8 | 20 | 3'-2 | 28 | 6'-11 | 1'-0 | 2'-6 | 3.127 | 385 | 8 |
| 7'-10 | 6'-6 | | | 22 | | 30 | 7'-5 | | | 3.303 | 417 | 9 |
| 8'-4 | 7'-0 | | | 22 | | 30 | 7'-11 | | | 3.479 | 427 | 10 |
| 8'-10 | 7'-6 | | | 24 | | 32 | 8'-5 | | | 3.655 | 458 | 11 |
| 9'-4 | 8'-0 | | | 24 | | 32 | 8'-11 | | | 3.831 | 468 | 12 |
| 9'-10 | 8'-6 | | | 26 | | 34 | 9'-5 | | | 4.007 | 499 | 13 |
| 10'-4 | 9'-0 | | | 26 | | 34 | 9'-11 | | | 4.182 | 510 | 14 |
| 10'-10 | 9'-6 | | | 28 | | 36 | 10'-5 | | | 4.358 | 541 | 15 |
| 11'-4 | 10'-0 | | | 28 | | 36 | 10'-11 | | | 4.534 | 551 | 16 |
| 11'-10 | 10'-6 | | | 30 | | 38 | 11'-5 | | | 4.710 | 582 | 17 |
| 12'-4 | 11'-0 | 6" | 6'-8 | 30 | 3'-2 | 38 | 11'-11 | 1'-0 | 2'-6 | 4.886 | 592 | 18 |
| 12'-11 | 11'-6 | 7" | 6'-10 | 32 | 3'-4 | 40 | 12'-6 | 1'-1 | 2'-7 | 5.988 | 638 | 19 |
| 13'-5 | 12'-0 | | | 32 | | 40 | 13'-0 | | | 6.197 | 648 | 20 |
| 13'-11 | 12'-6 | | | 34 | | 42 | 13'-6 | | | 6.406 | 680 | 21 |
| 14'-5 | 13'-0 | | | 34 | | 42 | 14'-0 | | | 6.615 | 690 | 22 |
| 14'-11 | 13'-6 | | | 36 | | 44 | 14'-6 | | | 6.824 | 722 | 23 |
| 15'-5 | 14'-0 | | | 36 | | 44 | 15'-0 | | | 7.032 | 733 | 24 |
| 15'-11 | 14'-6 | | | 38 | | 46 | 15'-6 | | | 7.241 | 764 | 25 |
| 16'-5 | 15'-0 | | | 38 | | 46 | 16-0 | | | 7.450 | 775 | 26 |
| 16'-11 | 15'-6 | | | 40 | | 48 | 16'-6 | | | 7.659 | 806 | 27 |
| 17'-5 | 16'-0 | | | 40 | | 48 | 17'-0 | | | 7.868 | 817 | 28 |
| 17'-11 | 16'-6 | | | 42 | | 50 | 17'-6 | | | 8.076 | 848 | 29 |
| 18'-5 | 17'-0 | | | 42 | | 50 | 18'-0 | | | 8.285 | 859 | 30 |
| 18'-11 | 17'-6 | | | 44 | | 52 | 18'-6 | | | 8.494 | 890 | 31 |
| 19'-5 | 18'-0 | | | 44 | | 52 | 19'-0 | | | 8.703 | 901 | 32 |
| 19'-11 | 18'-6 | | | 46 | | 54 | 19'-6 | | | 8.912 | 932 | 33 |
| 20'-5 | 19'-0 | | | 46 | | 54 | 20'-0 | | | 9.120 | 948 | 34 |
| 20'-11 | 19'-6 | | | 48 | | 56 | 20'-6 | | | 9.329 | 975 | 35 |
| 21'-5 | 20'-0 | | | 48 | | 56 | 21'-0 | | | 9.538 | 985 | 36 |
| 21'-11 | 20'-6 | | | 50 | | 58 | 21'-6 | | | 9.747 | 1017 | 37 |
| 22'-5 | 21'-0 | 7" | 6'-10 | 50 | 3'-4 | 58 | 22'-0 | 1'-1 | 2'-7 | 9.965 | 1027 | 38 |
| 23'-0 | 21'-6 | 8" | 7'-0 | 52 | 3'-6 | 60 | 22'-7 | 1'-2 | 2'-8 | 11.808 | 1080 | 39 |
| 23'-6 | 22'-0 | | | 52 | | 60 | 23'-1 | | | 12.051 | 1091 | 40 |
| 24'-0 | 22'-6 | | | 54 | | 62 | 23'-7 | | | 12.294 | 1123 | 41 |
| 24'-6 | 23'-0 | | | 54 | | 62 | 24'-1 | | | 12.536 | 1134 | 42 |
| 25'-0 | 23'-6 | | | 56 | | 64 | 24'-7 | | | 12.779 | 1166 | 43 |
| 25'-6 | 24'-0 | | | 56 | | 64 | 25'-1 | | | 13.022 | 1176 | 44 |
| 26'-0 | 24'-6 | | | 58 | | 66 | 25'-7 | | | 13.265 | 1208 | 45 |
| 26'-6 | 25'-0 | | | 58 | | 66 | 26'-1 | | | 13.508 | 1219 | 46 |
| 27'-0 | 25'-6 | | | 60 | | 68 | 26'-7 | | | 13.750 | 1251 | 47 |
| 27'-6 | 26'-0 | | | 60 | | 68 | 27'-1 | | | 13.993 | 1262 | 48 |
| 28'-0 | 26'-6 | | | 62 | | 70 | 27'-7 | | | 14.236 | 1294 | 49 |
| 28'-6 | 27'-0 | | | 62 | | 70 | 28'-1 | | | 14.479 | 1304 | 50 |
| 29'-0 | 27'-6 | | | 64 | | 72 | 28'-7 | | | 14.722 | 1337 | 51 |
| 29'-6 | 28'-0 | | | 64 | | 72 | 29'-1 | | | 14.964 | 1347 | 52 |
| 30'-0 | 28'-6 | | | 66 | | 74 | 29'-7 | | | 15.207 | 1380 | 53 |
| 30'-6 | 29'-0 | 8" | 7'-0 | 66 | 3'-6 | 74 | 30'-1 | 1'-2 | 2'-8 | 15.450 | 1390 | 54 |

N=6 S=8 W=6'-0 M=2'-4

ICRETE NEEDED FOR FORMED INVERT:

| C.M.P. CU. YD. |
|---|
| ---- |
| 0.143 |
| ---- |
| 0.223 |
| 0.270 |
| 0.322 |

STRUCTURAL STEEL :

RECTANGULAR GRATE & FRAME = 340 LBS
BICYCLE - SAFE GRATE & FRAME = 365 LBS.
SOLID COVER & FRAME = 474 LBS.

REVISIONS

| NO. | DATE | APPR. | REMARKS |
|---|---|---|---|
| | | | |

PORTATION
: CONSTRUCTION

JAN.01,2005 DATE
JAN.01,2005 DATE

S
RECOMME
CHAIRMA APPROVE
DEPUTY DIRECTOR

STANDARD CATCH BASIN AND CLEANOUT BOX SCHEDULE OF INSTALLATION 42" TO 60" RCP 48" TO 72" CMP

STANDARD DRAWING TITLE

STD DWG
CB 10C

# CRASH CUSHIO

## TYPE A,B & D

### TYPE E

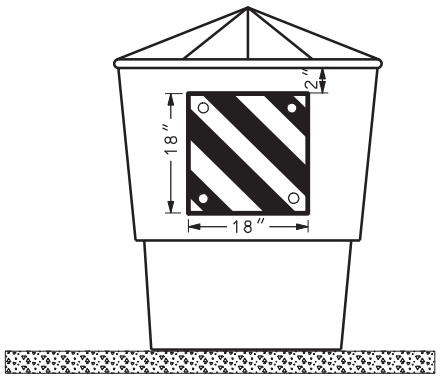


PLACE THE APPROPRIATE OBJECT MARKER PANEL OR SHEETING 2 INCHES FROM THE TOP OF THE LEAD BARREL OF THE ARRAY.

MARKER POST NOT REQUIRED.

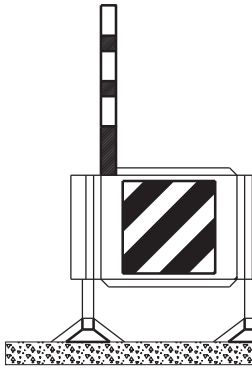

OBJECT MARKER PLATE OR SHEETING:
SIDE OF UNIT NEAREST THE APPROAC
AREA CENTER OBJECT MARKER.

* APPROVED SYSTEM TYPE D, REACT-
SUPPLIED WITH THE SYSTEM, MARKER

### MARKER PLATE

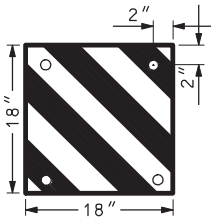


USE A 0.032 GAUGE ALUMINUM MARKER PLATE WITH APPROPRIATE MARKER SHEETING

USE FOUR 1 INCH X 3/8 INCH ZINC PLATED BOLTS WITH WASHERS AND NUTS TO MOUNT PLATE.

SELF ADHESIVE SHEETING WITH APPROPRIATE OBJECT MARKER DESIGNATION CAN BE USED AS A SUBSTITUTE.

T

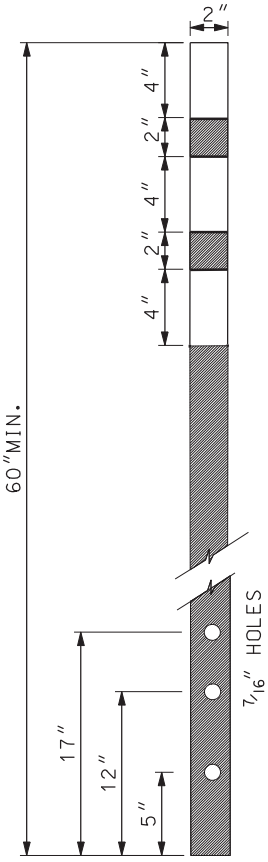


### MARKER POST

PLACE YELLOW BANDS OF REFLECTIVE SHEETING AS SPECIFIED BY STANDARD SPECIFICATION, SECTION 02891, PART 2 AT THE TOP OF THE POST WITH A 2 INCH SPACE BETWEEN THE 1ST AND 2ND BAND AND THE 2ND AND 3RD BAND. DRILL THREE MOUNTING HOLES, 7/16 INCH IN DIAMETER, MEASURED FROM THE BOTTOM UP 5 INCHES, 12 INCHES AND 17 INCHES.

### MARKER POST MOUNTING

MOUNT MARKER POST 48 INCHES FROM THE BOTTOM OF THE THIRD YELLOW BAND TO GROUND LEVEL. DO NOT COLLAPSE MARKER POST WHEN SECURING TO SYSTEM.

WOOD POST: PLACE MARKER POST ON THE FRONT OF THE FIRST POST OF SYSTEM AND SECURE WITH THREE 3/8 X 4 INCH ZINC PLATED LAG BOLTS AND WASHERS.

METAL POST: PLACE MARKER POST ON THE FRONT OF THE FIRST POST OF SYSTEM AND SECURE WITH THREE 3/8 X 3 INCH ZINC PLATED BOLTS WITH NUTS AND WASHERS.

PLASTIC NOSE PIECES: PLACE MARKER POST 12 INCHES FORWARD FROM THE BACK EDGE OF THE NOSE PIECE AND SECURE WITH THREE 3/8 X 3 INCH ZINC PLATED BOLTS WITH WASHERS.

### NOTE: 1

USE MARKER POST UNLESS OTHERWISE SPECIFIED. USE IS OPTIONAL WHEN SNOW ACCUMULATION IS NOT A CONCERN.

### NOTE: 2

SHEETING TO COMPLY WITH UDOT STANDARD SPECIFICATION 02842 FOR FLEXIBLE SHEETING.

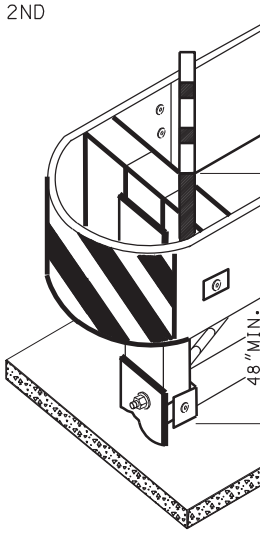


OBJECT MARKER
ATTACH TO THE
AND OFFSET 6
THE APPROACH

MARKER POST

DGN File: N:\Esd\Standard Drawings\Imperial\2005Approved\Crash Cushions (CC)\cc01.dgn
25-JAN-2005

ONS

ATTACH TO THE TOP FRONT AND
CH LANE OF TRAFFIC. IN A GORE

-350 HAS AN OBJECT MARKER
R POST IS NOT REQUIRED.

TYPE C

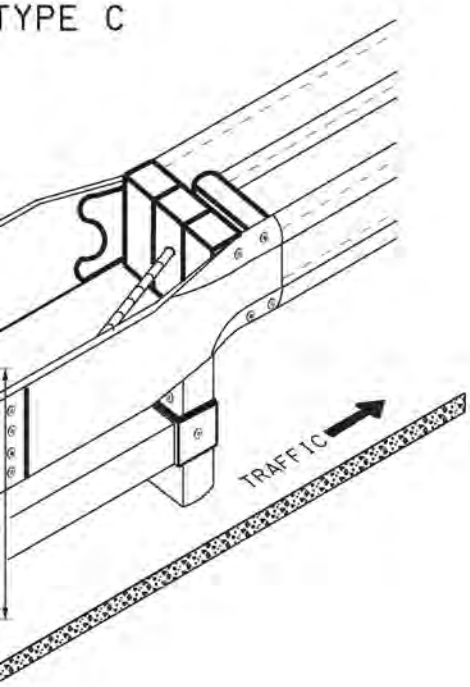


R PLATE OR SHEETING:
E FRONT OF SYSTEM TOP.
INCHES FROM CENTER TOWARD
LANE OF TRAFFIC.

TYPE A, B & D

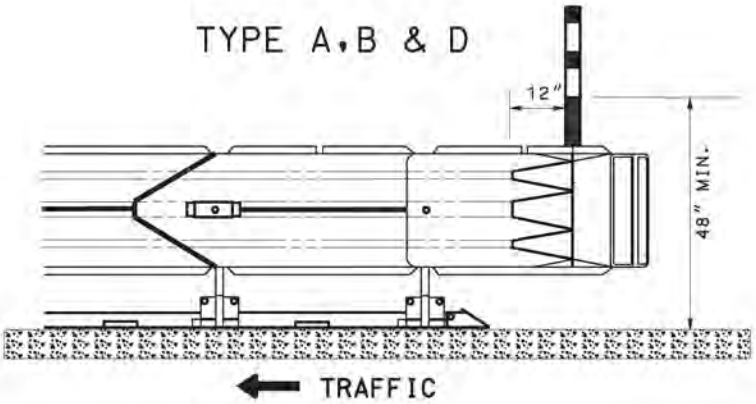


**MARKER POST:**

MOUNT ON THE SIDE OF THE APPROACH TRAFFIC, 12 INCHES FROM THE BACK EDGE OF PLASTIC NOSE PIECE. IN GORE AREAS MOUNT ON BOTH SIDES.

**CRASH CUSHION TYPE F.**

THIS SYSTEM HAS A BELTED OR PLASTIC NOSE PIECE AND STEEL POSTS. OBJECT MARKER MOUNTING SIMILAR TO TYPE H AND MARKER POST IS MOUNTED ON THE NOSE PIECE SIMILAR TO TYPE B.

TYPE H

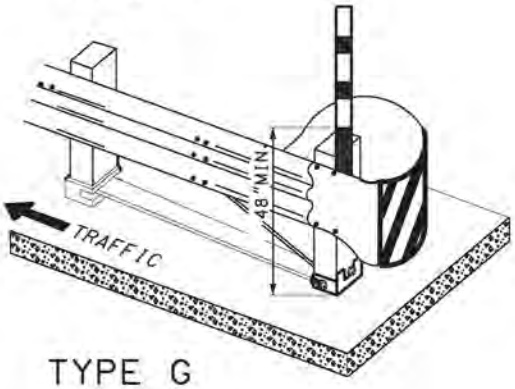


TYPE G

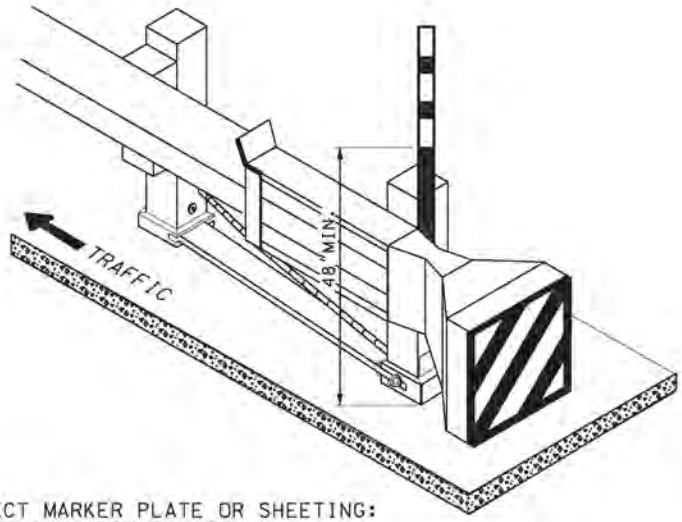


OBJECT MARKER PLATE OR SHEETING:
PLACE THE APPROPRIATE
OBJECT MARKER PANEL TO THE FRONT
OF THE SYSTEMS.

REVISIONS

| NO. | DATE | APPR. | REMARKS |
|---|---|---|---|
| | | | |

RTATION
CONSTRUCTION

RECOMME — JAN.01,2005 DATE
CHAIRMA APPROVE — JAN.01,2005 DATE
DEPUTY DIRECTOR

STANDARD DRAWING TITLE
CRASH CUSHION MARKINGS

STD DWG
CC 1

## PLAN A1: SPEEDS

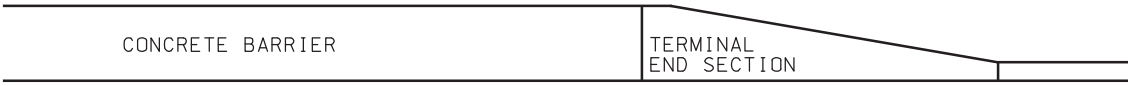


PROFILE VIEW

PLAN VIEW

## PLAN A2: SPEEDS OVER 4

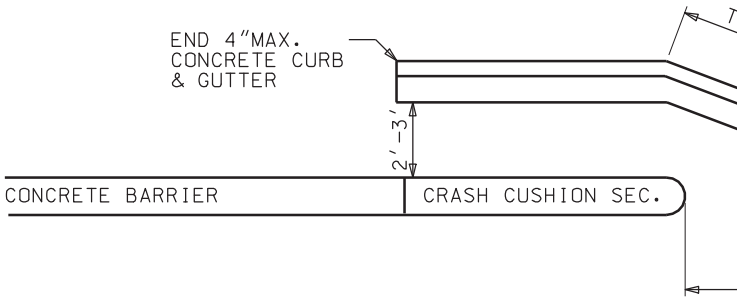


25-JAN-2005 DGN File:N:\Esd\Standard.Drawings\Imperial\2005Approved\Crash Cushions (CC)\cc02.dgn

UP TO 40 MPH

6" MIN. CURB & GUTTER

LIP OF CURB

DIRECTION OF TRAFFIC

40 MPH

RANSITION FROM CURB & GUTTER
DESIGN TO 4"CURB & GUTTER

DESIGNED CURB & GUTTER

50'MIN.SPACE

DIRECTION OF TRAFFIC

REVISIONS

| NO. | DATE | APPR. | REMARKS |
|---|---|---|---|
| | | | |

JRTATION
CONSTRUCTION

RECOMME S — JAN.01.2005 DATE

CHAIRMA APPROVE — JAN.01.2005 DATE

DEPUTY DIRECTOR

STANDARD DRAWING TITLE

CRASH CUSHION
DRAINAGE DETAILS
GUIDELINE A

STD DWG

CC 2

## SHOULDER APPLICATION

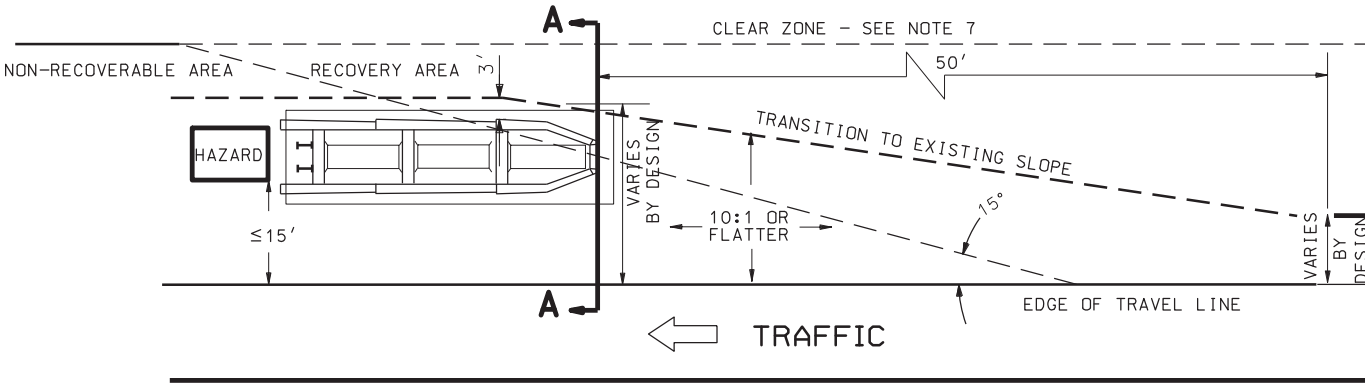


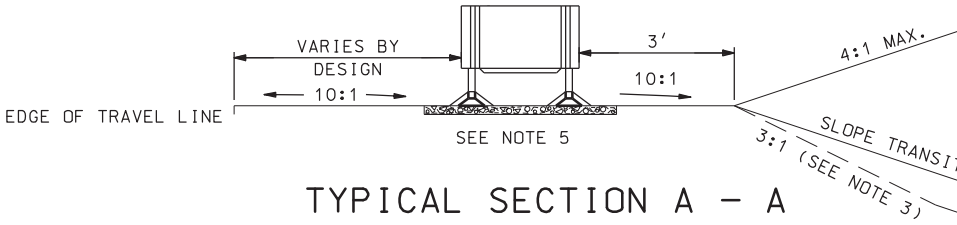


## TYPICAL SECTION A – A

## GORE APPLICATION AREA

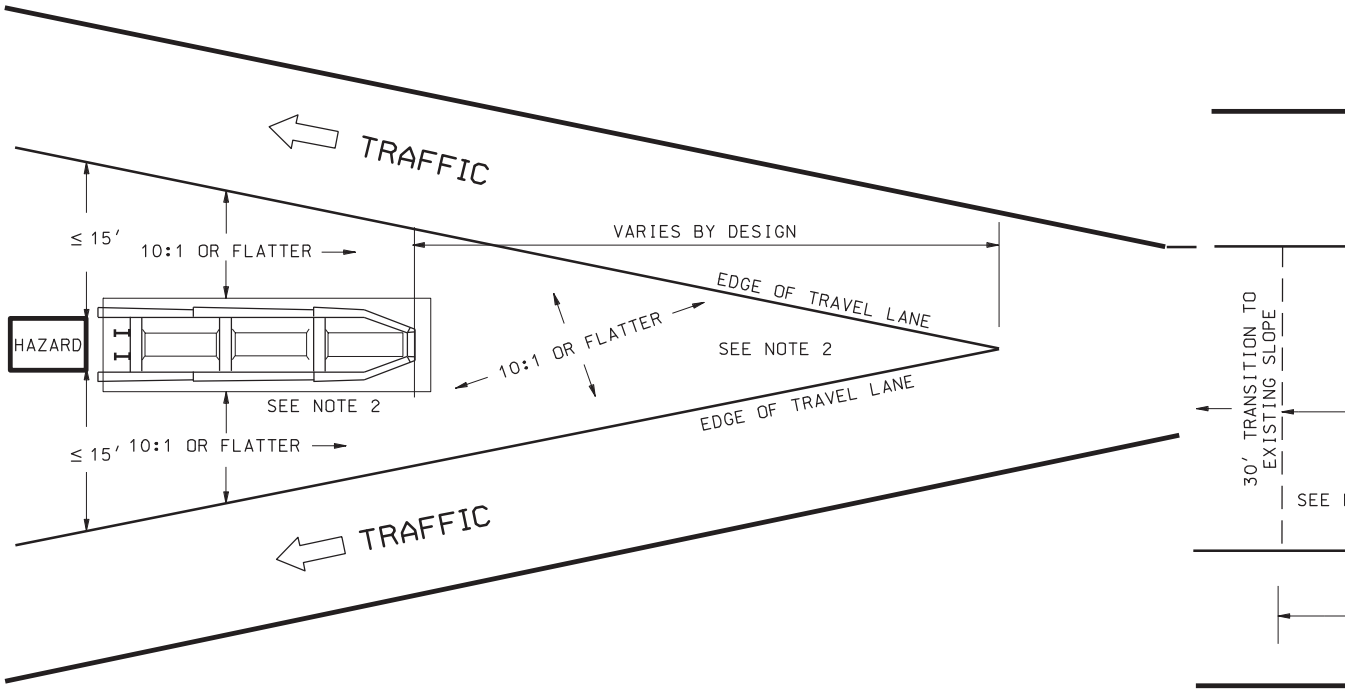


DGN File: N:\Esd\Standard Drawings\Imperial\2005Approved\Crash Cushions (CC)\cc04.dgn

25-JAN-2005

## NOTES:

1. CRASH CUSHION TYPE A: QUADGUARD, MANUFACTURED BY ENERGY ABSORPTION SYSTEMS, TO PROTECT HAZARDS FROM 37 INCHES TO 90 INCHES.

   CRASH CUSHION TYPE B: QUADGUARD, MANUFACTURED BY ENERGY ABSORPTION SYSTEMS, TO PROTECT HAZARDS UP TO 36 INCHES.

   CRASH CUSHION TYPE D: QUADGUARD ELITE AND QUADGUARD LMC, MANUFACTURED BY ENERGY ABSORPTION SYSTEMS, AND REACT 350, MANUFACTURED BY ROADWAY SAFETY SERVICES.
   TYPE D SYSTEMS PROTECT HAZARDS UP TO 90 INCHES IN WIDTH.
   TYPE D SYSTEMS ARE USED WHERE ONE OR MORE IMPACTS PER YEAR ARE ANTICIPATED, OR WHEN REPAIR HISTORY INDICATES TWO OR MORE IMPACTS OVER A THREE YEAR PERIOD.

2. ALL APPLICATIONS REQUIRE THE USE OF A 10:1 SLOPE OR FLATTER TO THE FRONT AND SIDE APPROACHES. USE A 10:2 OR FLATTER SLOPE AT THE REAR OF THE SYSTEM WHEN TRAFFIC ALSO APPROACHES FROM THE REAR OF THE SYSTEM.

3. USE A 4:1 OR FLATTER FILL SLOPE AND A RECOVERY AREA IF IMPRACTICAL, USE A MAXIMUM 3:1 FILL SLOPE AND A RECOVERY AREA ESTABLISHED AT THE TOE OF 3:1 FILL SLOPE. WHEN USED WITH A CUT SLOPE, A 4:1 OR FLATTER CUT IS REQUIRED IN THE RECOVERY AREA.

4. USE A TRANSITION ELEMENT, AS PER MANUFACTURER'S SPECIFICATIONS, WHEN TRAFFIC APPROACHES THE REAR OF SYSTEM.

5. USE MANUFACTURER'S SPECIFICATIONS FOR PAD AND BACKUP REQUIREMENTS.

6. INSTALL PROPER MARKINGS AS PER STD DWG CC 1.

7. MAINTAIN AASHTO CLEAR ZONE REQUIREMENTS.

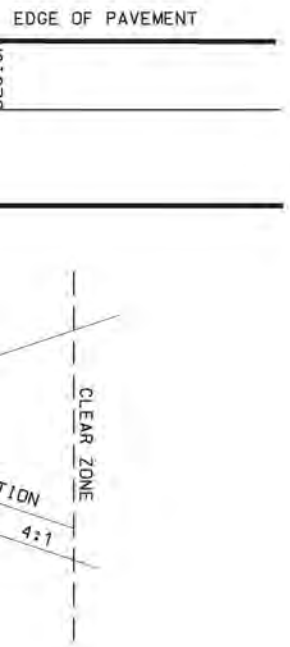


## MEDIAN APPLICATION

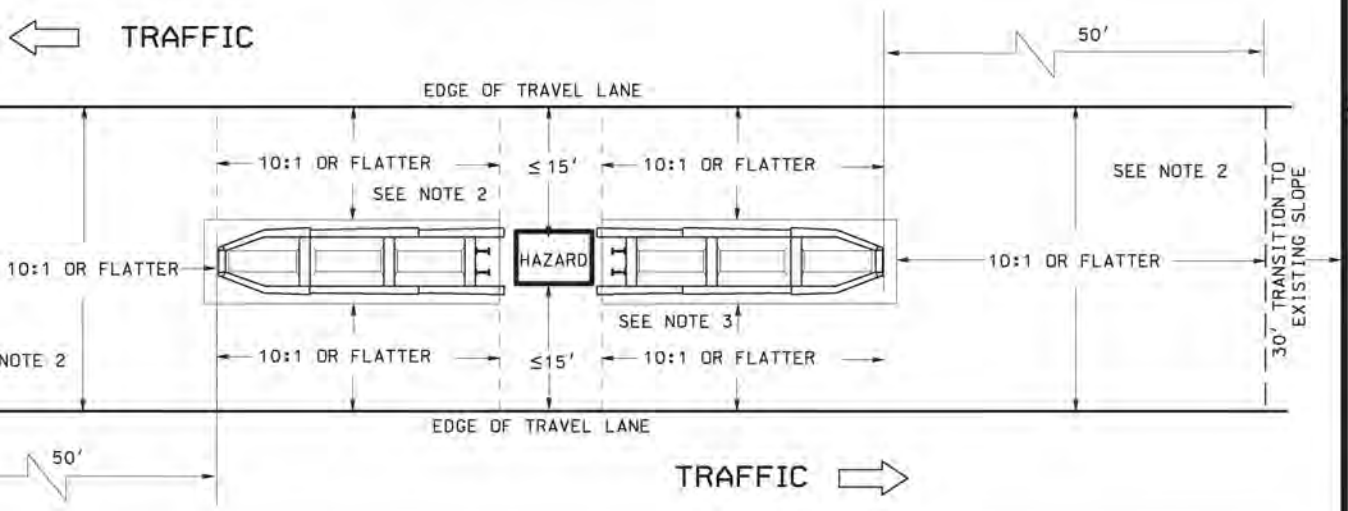


REVISIONS

| NO. | DATE | APPR. | REMARKS |
|---|---|---|---|
| | | | |

PORTATION
: CONSTRUCTION

RECOMME: JAN.01.2005 DATE

CHAIRMA APPROVE: JAN.01.2005 DATE

DEPUTY DIRECTOR DATE

DETAILS FOR PLACEMENT CRASH CUSHIONS TYPE A, B, AND D

STANDARD DRAWING TITLE

STD DWG
CC 4

## CORRUGATED STEEL PIPE ARCHES
**2 2/3" x ½" CORRUGATIONS**

| PIPE DIM. SPAN X RISE inch | CORNER RADIUS inch | MIN. COVER ft. | MIN. THICKNESS inch | MAX. FILL HEIGHT ft. |
|---|---|---|---|---|
| 17 x 13 | 3 | 18 | 0.064 | 11 |
| 21 x 15 | 3 | 18 | 0.064 | 9 |
| 24 x 18 | 3 | 24 | 0.064 | 7 |
| 28 x 20 | 3 | 24 | 0.064 | 5 |
| 35 x 24 | 4 | 30 | 0.064 | 6 |
| 42 x 29 | 4½ | 30 | 0.064 | 5 |
| 49 x 33 | 5½ | 30 | 0.079 | 5 |
| 57 x 38 | 6½ | 30 | 0.109 | 6 |
| 64 x 43 | 7 | 30 | 0.109 | 5 |
| 71 x 47 | 8 | 24 | 0.138 | 5 |
| 77 x 52 | 8½ | 24 | 0.168 | 5 |
| 83 x 57 | 9 | 24 | 0.168 | 5 |

SEE NOTE 1

## CORRUGATED STEEL PIPE ARCHES
**6" x 2" CORRUGATIONS**
**BOLTED FABRICATION 4 BOLTS/FT ¾" DIA.**

| PIPE DIM. SPAN X RISE ft-inch | CORNER RADIUS inch | MIN. COVER ft. | MIN. THICKNESS inch | MAX. FILL HEIGHT ft. |
|---|---|---|---|---|
| 6-1 x 4-7 | 18 | 18 | 0.109 | 16 |
| 7-0 x 5-1 | 18 | 18 | 0.109 | 14 |
| 7-11 x 5-7 | 18 | 18 | 0.109 | 12 |
| 8-10 x 6-1 | 18 | 24 | 0.109 | 11 |
| 9-9 x 6-7 | 18 | 24 | 0.109 | 10 |
| 10-11 x 7-1 | 18 | 24 | 0.109 | 8 |
| 11-10 x 7-7 | 18 | 24 | 0.109 | 7 |
| 12-10 x 7-7 | 18 | 24 | 0.109 | 6 |
| 14-1 x 8-4 | 18 | 30 | 0.109 | 5 |
| 15-4 x 9-3 | 21 | 24 | 0.138 | 6 |
| 15-10 x 9-10 | 21 | 24 | 0.138 | 5 |
| 16-7 x 10-9 | 21 | 24 | 0.138 | 4 |
| 13-3 x 9-4 | 31 | 24 | 0.109 | 12 |
| 14-3 x 9-10 | 31 | 24 | 0.109 | 11 |
| 15-4 x 10-4 | 31 | 24 | 0.138 | 10 |
| 16-3 x 10-10 | 31 | 24 | 0.138 | 9 |
| 17-2 x 11-4 | 31 | 30 | 0.138 | 9 |
| 18-1 x 11-10 | 31 | 30 | 0.168 | 8 |
| 19-3 x 12-4 | 31 | 30 | 0.168 | 7 |
| 19-11 x 12-10 | 31 | 30 | 0.168 | 7 |
| 20-7 x 13-10 | 31 | 36 | 0.188 | 7 |

## RO

| THICKNESS | 0 |
|---|---|
| PIPE DIAMETER inch | MIN. COVE inch |
| 36 | 12 |
| 42 | 12 |
| 48 | 12 |
| 54 | 12 |
| 60 | 12 |
| 66 | 13 |
| 72 | 15 |
| 78 | 16 |
| 84 | 17 |
| 90 | 18 |
| 96 | |
| 102 | |
| 108 | |
| 114 | |
| 120 | |
| 126 | |
| 132 | |
| 138 | |
| 144 | |

SEE NOTE 1

## ROUND CORRUGATED STEEL PIPE
**2 2/3" x ½" CORRUGATIONS**

| THICKNESS | 0.064 | | 0.079 | | 0.109 | | 0.138 | | 0.168 | |
|---|---|---|---|---|---|---|---|---|---|---|
| PIPE DIAMETER inch | MIN. COVER inch | MAX. FILL ft. | MIN. COVER inch | MAX. FILL ft. | MIN. COVER inch | MAX. FILL ft. | MIN. COVER inch | MAX. FILL ft. | MIN. COVER inch | MAX. FILL ft. |
| 12 | 12 | 213 | 12 | 266 | 12 | 372 | 12 | 479 | 12 | 586 |
| 15 | 12 | 170 | 12 | 212 | 12 | 298 | 12 | 383 | 12 | 469 |
| 18 | 12 | 142 | 12 | 177 | 12 | 248 | 12 | 319 | 12 | 391 |
| 21 | 12 | 121 | 12 | 152 | 12 | 213 | 12 | 274 | 12 | 335 |
| 24 | 12 | 106 | 12 | 133 | 12 | 186 | 12 | 239 | 12 | 293 |
| 27 | 12 | 94 | 12 | 118 | 12 | 165 | 12 | 213 | 12 | 260 |
| 30 | 12 | 85 | 12 | 106 | 12 | 149 | 12 | 191 | 12 | 234 |
| 36 | 12 | 71 | 12 | 88 | 12 | 124 | 12 | 159 | 12 | 195 |
| 42 | 12 | 60 | 12 | 76 | 12 | 106 | 12 | 137 | 12 | 167 |
| 48 | 12 | 53 | 12 | 66 | 12 | 93 | 12 | 119 | 12 | 146 |
| 54 | | | 12 | 59 | 12 | 82 | 12 | 106 | 12 | 130 |
| 60 | | | | | 12 | 74 | 12 | 95 | 12 | 117 |
| 66 | | | | | | | 13 | 87 | 12 | 106 |
| 72 | | | | | | | 14 | 79 | 13 | 97 |
| 78 | | | | | | | | | 14 | 86 |
| 84 | | | | | | | | | 15 | 75 |

SEE NOTE 1

## ROUND CORRUGATED STEEL PIPE
**¾" x 1" SPIRAL RIB PIPE**

| THICKNESS | 0.064 | | 0.079 | | 0.109 | |
|---|---|---|---|---|---|---|
| PIPE DIAMETER inch | MIN. COVER inch | MAX. FILL ft. | MIN. COVER inch | MAX. FILL ft. | MIN. COVER inch | MAX. FILL ft. |
| 24 | 12 | 56 | 12 | 70 | 12 | 99 |
| 30 | 12 | 45 | 12 | 56 | 12 | 79 |
| 36 | 12 | 37 | 12 | 47 | 12 | 66 |
| 42 | 12 | 32 | 12 | 40 | 12 | 56 |
| 48 | 12 | 28 | 12 | 35 | 12 | 49 |
| 54 | | 25 | 15 | 31 | 15 | 44 |
| 60 | | 22 | 15 | 28 | 15 | 39 |
| 66 | | | 18 | 25 | 18 | 36 |
| 72 | | | 18 | 23 | 18 | 33 |
| 78 | | | | | 21 | 30 |
| 84 | | | | | 21 | 28 |

## CORRUGATED STEEL PIPE ARCHES
**3" x 1" OR 5" x 1" CORRUGATIONS**

| PIPE DIM. SPAN X RISE inch | CORNER RADIUS inch | MIN. COVER inch | MIN. THICKNESS inch | MAX. FILL HEIGHT ft. |
|---|---|---|---|---|
| 53 x 41 | 7 | 24 | 0.109 | 7 |
| 60 x 46 | 8 | 24 | 0.109 | 7 |
| 66 x 51 | 9 | 18 | 0.109 | 9 |
| 73 x 55 | 12 | 18 | 0.109 | 10 |
| 81 x 59 | 14 | 18 | 0.109 | 11 |
| 87 x 63 | 14 | 18 | 0.109 | 10 |
| 95 x 67 | 16 | 18 | 0.109 | 11 |
| 103 x 71 | 16 | 24 | 0.109 | 10 |
| 112 x 75 | 18 | 24 | 0.109 | 10 |
| 117 x 79 | 18 | 24 | 0.109 | 10 |
| 128 x 83 | 18 | 24 | 0.138 | 8 |
| 137 x 87 | 18 | 24 | 0.138 | 7 |
| 142 x 91 | 18 | 24 | 0.168 | 7 |

SEE NOTE 1

## R

| THICKNESS | |
|---|---|
| PIPE DIAMETER inch | MI COV in |
| 36 | 1 |
| 42 | 1 |
| 48 | 1 |
| 54 | 1 |
| 60 | 1 |
| 66 | 1 |
| 72 | 1 |
| 78 | 1 |
| 84 | 1 |
| 90 | 1 |
| 96 | |
| 102 | |
| 108 | |
| 114 | |
| 120 | |
| 126 | |
| 132 | |
| 138 | |
| 144 | |

SEE NOTE 1

NOTE 1: TABL
SEAM

DGN File:N:\Esd\Standard_Drawings\Imperial\2005Approved\Drainage (DG)\dg01.dgn
25-JAN-2005

## ROUND CORRUGATED STEEL PIPE
**3" x 1" CORRUGATIONS**

| .064 | | 0.079 | | 0.109 | | 0.138 | | 0.168 | |
|---|---|---|---|---|---|---|---|---|---|
| R | MAX. FILL ft. | MIN. COVER inch | MAX. FILL ft. | MIN. COVER inch | MAX. FILL ft. | MIN. COVER inch | MAX. FILL ft. | MIN. COVER inch | MAX. FILL ft. |
| | 81 | 12 | 102 | 12 | 143 | 12 | 184 | 12 | 225 |
| | 70 | 12 | 87 | 12 | 122 | 12 | 157 | 12 | 193 |
| | 61 | 12 | 76 | 12 | 107 | 12 | 138 | 12 | 159 |
| | 54 | 12 | 68 | 12 | 95 | 12 | 122 | 12 | 150 |
| | 49 | 12 | 61 | 12 | 85 | 12 | 110 | 12 | 135 |
| | 44 | 12 | 55 | 12 | 78 | 12 | 100 | 12 | 122 |
| | 40 | 13 | 51 | 12 | 71 | 12 | 92 | 12 | 112 |
| | 37 | 14 | 47 | 12 | 66 | 12 | 85 | 12 | 104 |
| | 35 | 15 | 43 | 13 | 61 | 12 | 78 | 12 | 96 |
| | 32 | 16 | 40 | 14 | 57 | 12 | 73 | 12 | 90 |
| | | 17 | 38 | 15 | 53 | 13 | 69 | 12 | 84 |
| | | 18 | 36 | 15 | 50 | 14 | 65 | 13 | 79 |
| | | | | 16 | 47 | 14 | 61 | 14 | 75 |
| | | | | 17 | 45 | 15 | 58 | 15 | 71 |
| | | | | 18 | 42 | 16 | 55 | 15 | 67 |
| | | | | | | 17 | 52 | 16 | 64 |
| | | | | | | 17 | 50 | 17 | 61 |
| | | | | | | 18 | 48 | 18 | 58 |
| | | | | | | | | 18 | 56 |

## ROUND CORRUGATED STEEL PIPE
**5" x 1" CORRUGATIONS**

| 0.064 | | 0.079 | | 0.109 | | 0.138 | | 0.168 | |
|---|---|---|---|---|---|---|---|---|---|
| N. VER ch | MAX. FILL ft. | MIN. COVER inch | MAX. FILL ft. | MIN. COVER inch | MAX. FILL ft. | MIN. COVER inch | MAX. FILL ft. | MIN. COVER inch | MAX. FILL ft. |
| 2 | 72 | 12 | 90 | 12 | 127 | 12 | 163 | 12 | 200 |
| 2 | 62 | 12 | 77 | 12 | 109 | 12 | 140 | 12 | 171 |
| 2 | 54 | 12 | 68 | 12 | 95 | 12 | 122 | 12 | 150 |
| 2 | 48 | 12 | 60 | 12 | 84 | 12 | 109 | 12 | 133 |
| 2 | 43 | 12 | 54 | 12 | 76 | 12 | 98 | 12 | 120 |
| 3 | 39 | 12 | 49 | 12 | 69 | 12 | 89 | 12 | 109 |
| 4 | 36 | 13 | 45 | 12 | 63 | 12 | 81 | 12 | 100 |
| 6 | 33 | 14 | 41 | 12 | 58 | 12 | 75 | 12 | 92 |
| 7 | 31 | 15 | 38 | 13 | 54 | 12 | 70 | 12 | 85 |
| 8 | 29 | 16 | 36 | 14 | 50 | 12 | 65 | 12 | 80 |
| | | 17 | 34 | 15 | 47 | 13 | 61 | 12 | 75 |
| | | 18 | 32 | 15 | 44 | 14 | 57 | 13 | 70 |
| | | | | 16 | 42 | 14 | 54 | 14 | 66 |
| | | | | 17 | 40 | 15 | 51 | 15 | 63 |
| | | | | 18 | 38 | 16 | 49 | 15 | 60 |
| | | | | | | 17 | 46 | 16 | 57 |
| | | | | | | 17 | 44 | 17 | 54 |
| | | | | | | 18 | 42 | 18 | 52 |
| | | | | | | | | 18 | 50 |

E IS FOR PIPE WITH HELICAL LOCK
S OR HELICAL WELDED SEAMS ONLY.

## ROUND CORRUGATED STEEL STRUCTURAL PLATE PIPE
**6" x 2" CORRUGATIONS**
**BOLTED FABRICATION 4 BOLTS/FT 3/4" DIA. THICKNESS**

| THICKNESS | | 0.109 | 0.138 | 0.168 | 0.186 | 0.218 | 0.249 | 0.280 |
|---|---|---|---|---|---|---|---|---|
| PIPE DIAMETER inch | MIN. COVER inch | MAX. FILL ft. | MAX. FILL ft. | MAX. FILL ft. | MAX. FILL ft. | MAX. FILL ft. | MAX. FILL ft. | MAX. FILL ft. |
| 60 | 12 | 46 | 68 | 90 | 103 | 124 | 146 | 160 |
| 66 | 12 | 42 | 62 | 81 | 93 | 113 | 133 | 145 |
| 72 | 12 | 38 | 57 | 75 | 86 | 103 | 122 | 135 |
| 78 | 12 | 35 | 52 | 69 | 79 | 95 | 112 | 123 |
| 84 | 12 | 33 | 49 | 64 | 73 | 88 | 104 | 114 |
| 90 | 12 | 31 | 45 | 60 | 68 | 82 | 97 | 106 |
| 96 | 12 | 29 | 43 | 56 | 64 | 77 | 91 | 100 |
| 102 | 13 | 27 | 40 | 52 | 60 | 73 | 86 | 94 |
| 108 | 14 | 25 | 38 | 50 | 57 | 69 | 81 | 88 |
| 114 | 15 | 24 | 36 | 47 | 54 | 65 | 77 | 84 |
| 120 | 15 | 23 | 34 | 45 | 51 | 62 | 73 | 80 |
| 126 | 16 | 22 | 32 | 42 | 49 | 59 | 69 | 76 |
| 132 | 17 | 21 | 31 | 40 | 46 | 56 | 66 | 72 |
| 138 | 18 | 20 | 29 | 39 | 44 | 54 | 63 | 69 |
| 144 | 18 | 19 | 28 | 37 | 43 | 51 | 61 | 66 |
| 150 | 19 | 18 | 27 | 36 | 41 | 49 | 58 | 64 |
| 156 | 20 | 17 | 26 | 34 | 39 | 47 | 56 | 61 |
| 162 | 21 | 17 | 25 | 33 | 38 | 46 | 54 | 59 |
| 168 | 21 | 16 | 24 | 32 | 36 | 44 | 52 | 57 |
| 174 | 22 | 16 | 23 | 31 | 35 | 42 | 50 | 55 |
| 180 | 23 | 15 | 22 | 30 | 34 | 41 | 48 | 53 |
| 186 | 24 | 15 | 22 | 29 | 33 | 40 | 47 | 51 |
| 192 | 24 | | 21 | 28 | 32 | 38 | 45 | 50 |
| 198 | 25 | | 20 | 27 | 31 | 37 | 44 | 48 |
| 204 | 26 | | 20 | 26 | 30 | 36 | 43 | 47 |
| 210 | 27 | | 19 | 25 | 29 | 35 | 42 | 45 |
| 216 | 27 | | | 25 | 28 | 34 | 41 | 44 |
| 222 | 28 | | | 24 | 27 | 33 | 40 | 43 |
| 228 | 29 | | | 23 | 27 | 32 | 39 | 42 |
| 234 | 30 | | | 23 | 26 | 31 | 38 | 41 |
| 240 | 30 | | | | 25 | 31 | 37 | 40 |
| 246 | 31 | | | | 25 | 30 | 36 | 39 |
| 252 | 32 | | | | | 29 | 35 | 38 |
| 258 | 33 | | | | | 28 | 34 | 37 |
| 264 | 33 | | | | | 28 | 34 | 36 |
| 270 | 34 | | | | | 27 | 33 | 35 |
| 276 | 35 | | | | | | 32 | 34 |
| 282 | 36 | | | | | | 32 | 34 |
| 288 | 36 | | | | | | 31 | 33 |
| 294 | 37 | | | | | | | 32 |
| 300 | 38 | | | | | | | 32 |
| 306 | 39 | | | | | | | 31 |

## STRUCTURAL STEEL UNDERPASS
**6" x 2" CORRUGATIONS**

| PIPE DIM. SPAN X RISE ft-inch | CORNER RADIUS inch | MIN. COVER inch | MIN. THICKNESS inch | MAX. FILL HEIGHT ft. |
|---|---|---|---|---|
| 12-2 x 11-0 | 38 | 24 | 0.111 | 11 |
| 13-2 x 11-11 | 38 | 24 | 0.111 | 10 |
| 14-1 x 12-10 | 38 | 24 | 0.111 | 10 |
| 14-10x 13-5 | 38 | 24 | 0.111 | 10 |
| 15-9 x 15-1 | 38 | 24 | 0.111 | 7 |
| 16-5 x 16-1 | 38 | 24 | 0.140 | 7 |
| 17-3 x 17-0 | 47 | 36 | 0.140 | 9 |
| 19-2 x 17-2 | 47 | 36 | 0.170 | 7 |
| 20-4 x 17-9 | 47 | 36 | 0.188 | 6 |

REVISIONS

| NO | DATE | APPR. | REMARKS |
|---|---|---|---|

JRTATION
CONSTRUCTION

RECOMME S — JAN.01,2005 DATE

CHAIRMA APPROVEI — JAN.01,2005 DATE

DEPUTY DIRECTOR

FILL HEIGHT
FOR METAL PIPE
(STEEL)

STANDARD DRAWING TITLE

STD DWG
DG 1

# PIPE MINIMUM COVER

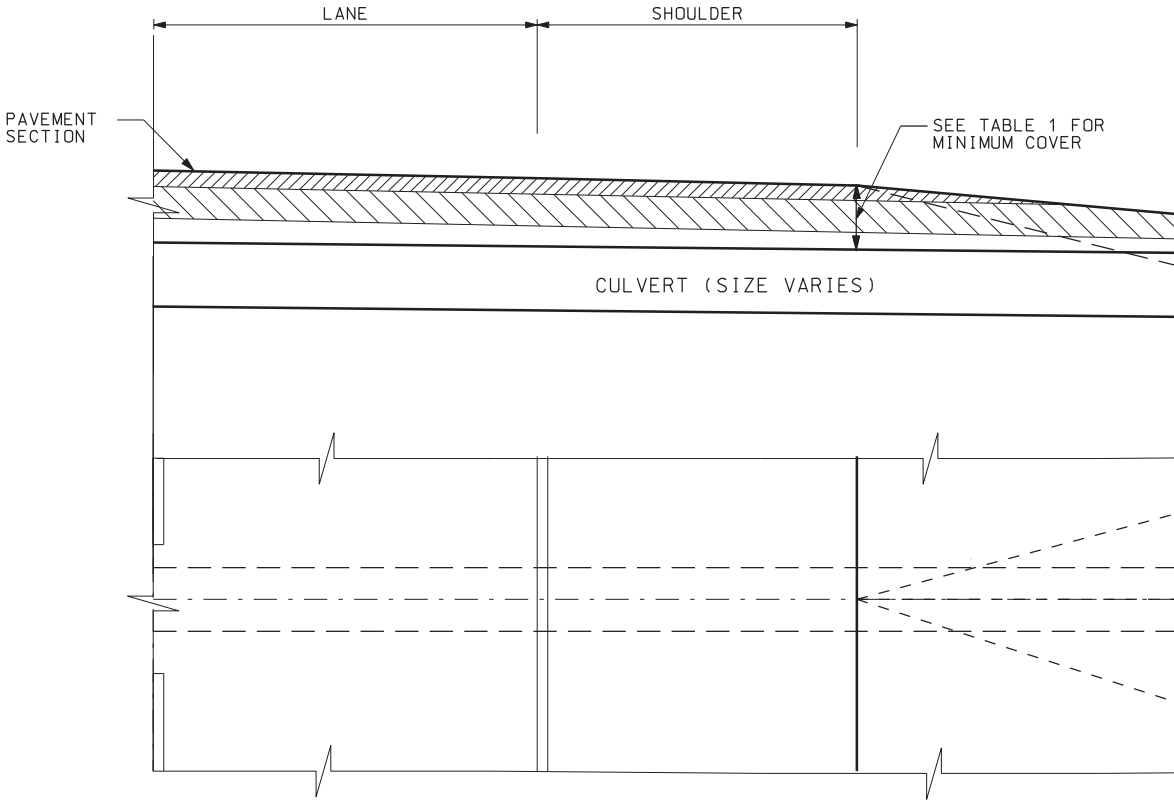


| TABLE 1: MINIMUM COV | | | |
|---|---|---|---|
| SURFACE TYPE | CORRUGATED METAL PIPES AND PIPE ARCHES | STRUCTURAL PLATE PIPES AND PIPE ARCHES | REIN CONC PI |
| FLEXIBLE PAVEMENTS OR UNPAVED | THE GREATER OF 1/5 (DIA. OR SPAN) OR 2'MIN. | THE GREATER OF 1/8 (DIA. OR SPAN) OR 2'MIN. | 1'-6 |
| RIGID PAVEMENTS | 1/5 (DIA. OR SPAN) OR 1'-6"MIN. | 1/8 (DIA. OR SPAN) OR 1'-6"MIN. | 1'-6 |

DGN File:N:\Esd\Standard_Drawings\Imperial\2005Approved\Drainage (DG)\dg04.dgn
25-JAN-2005

## NOTES:

1. GRADE GROUND UNIFORMLY AROUND THE PIPE.
2. PLASTIC PIPE INCLUDES POLYETHYLENE AND POLYVINYL CHLORIDE.
3. THE MINIMUM COVER FOR HDPE PIPES OF DIAMETER LARGER THAN 48" IS HALF THE PIPE DIAMETER (D/2).
4. PROTECT PIPE DURING CONSTRUCTION.
5. ENGINEER REVIEWS AND APPROVES ANY VARIATION TO MINIMUM COVER.
6. PLACE HEADWALL ON ALL PIPE 36" DIA. AND ABOVE.
7. USE METAL END SECTION ON ALL FLEXIBLE PIPES BELOW 36" IN DIAMETER.
8. 1' MIN. COVER WITH HEAD WALL. OR 6" MIN. COVER 1' FROM EDGE OF END SECTION WHEN NO HEAD WALL IS REQUIRED.

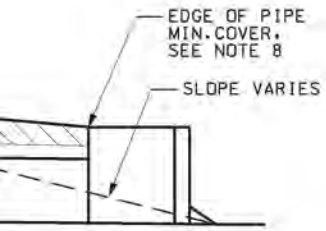


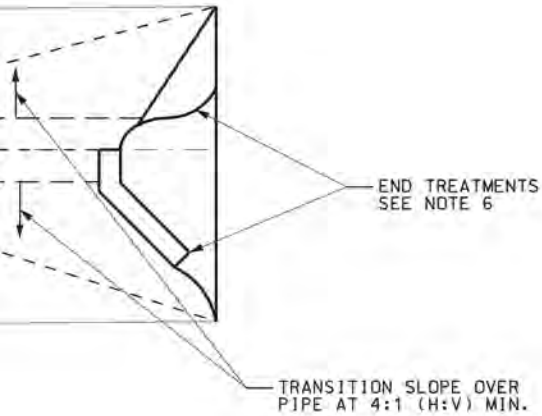


| VER | |
|---|---|
| FORCED CRETE PES | PLASTIC PIPES (SEE NOTE 2 AND 3) |
| 6"MIN. | 2' MIN. |
| 6"MIN. | 2'MIN. |

NOTE: DRAWING NOT TO SCALE

REVISIONS

| NO. | DATE | APPR. | REMARKS |
|---|---|---|---|
| | | | |

RTATION
: CONSTRUCTION

RECOMME JAN.01.2005 DATE
CHAIRMA APPROVE JAN.01.2005 DATE
DEPUTY DIRECTOR

STANDARD DRAWING TITLE
PIPE MINIMUM COVER

STD DWG
DG 4

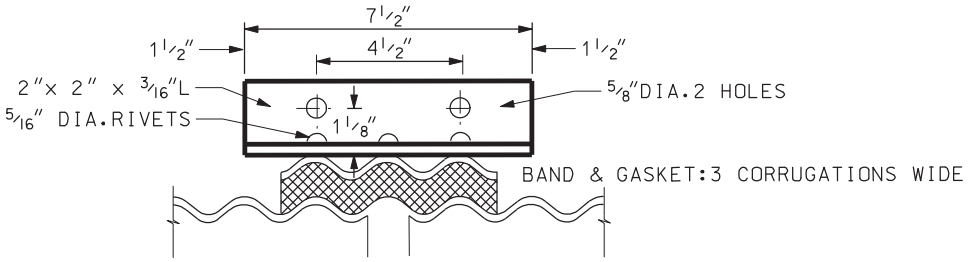


18"- 30" DIAMETER INCLUSIVE

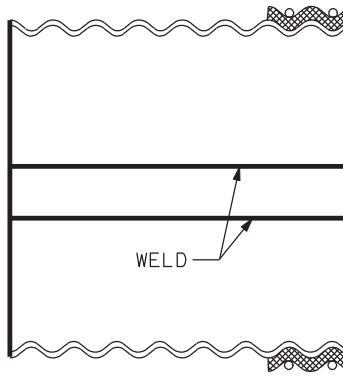


B

7.5"FOR 1
12" FOR 3
24" FOR 6
1 PIECE BA
2 PIECE BA

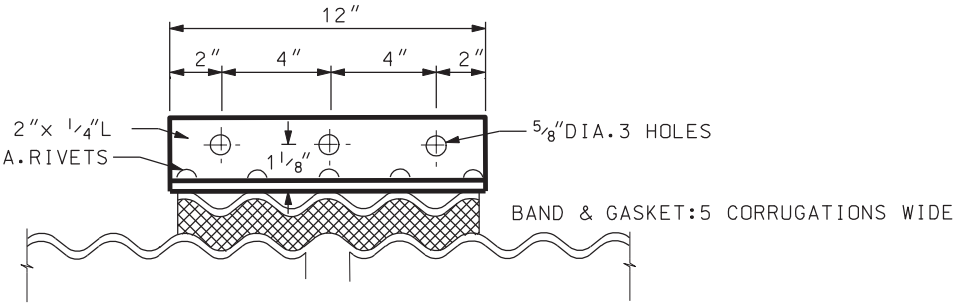


36"- 60" DIAMETER INCLUSIVE

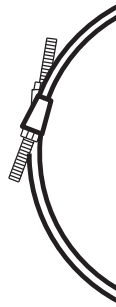

TYPE "

SIZE OF

1/4" DIA.
3/4" DIA.
1/2" DIA.
1 PIECE
2 PIECE

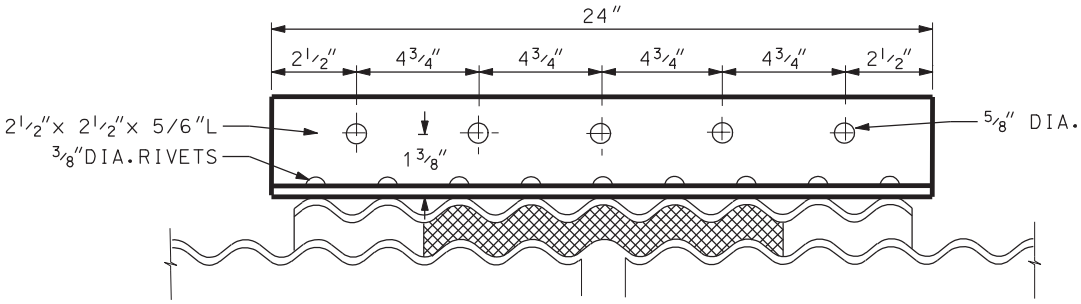


66"- 84" DIAMETER INCLUSIVE

BAND: 9 CORRUGATIONS WIDE
GASKET:5 CORRUGATIONS WIDE

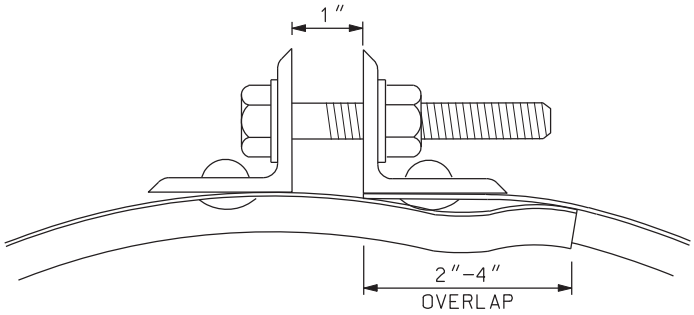


1/2"DIA. HEX. BOLT & NUT WITH WASHER OR
1/2" DIA. CARRIAGE BOLT & NUT WITH WASHER
(9/16" x 3/4" SLOTTED OPENING)

TYPE "A" CMP COUPLING

DGN File:N:\Esd\Standard.Drawings\Imperial\2005Approved\Drainage (DG)\dg07.dgn
25-JAN-2005

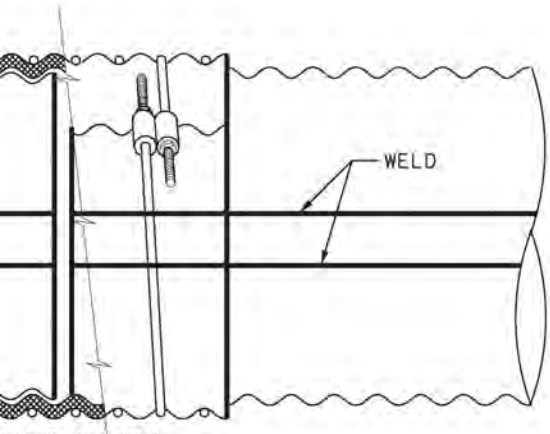


BAND WIDTH

8"- 30" DIA. CMP INCLUSIVE
6"- 60" DIA. CMP INCLUSIVE
6"- 84" DIA. CMP INCLUSIVE
AND FOR 18" - 42" DIA. CMP
AND FOR 48" - 84" DIA. CMP

'B" CMP COUPLING

ROD & SILO TYPE LUG

FOR 18" - 21" DIA. CMP
FOR 24" - 36" DIA. CMP
FOR 42" - 84" DIA. CMP
HOOPS FOR 18" - 42" DIA. CMP
HOOPS FOR 48" - 84" DIA. CMP

TABLE 1

| NOMINAL PIPE DIAMETER inch | GASKET LENGTH inch |
|---|---|
| 15 | 44 |
| 18 | 54 |
| 21 | 63 |
| 24 | 72 |
| 27 | 80 |
| 30 | 90 |
| 33 | 97 |
| 36 | 107 |
| 42 | 126 |
| 48 | 144 |
| 54 | 160 |
| 60 | 179 |
| 66 | 198 |
| 72 | 214 |
| 78 | 232 |
| 84 | 248 |
| 90 | 267 |
| 96 | 286 |

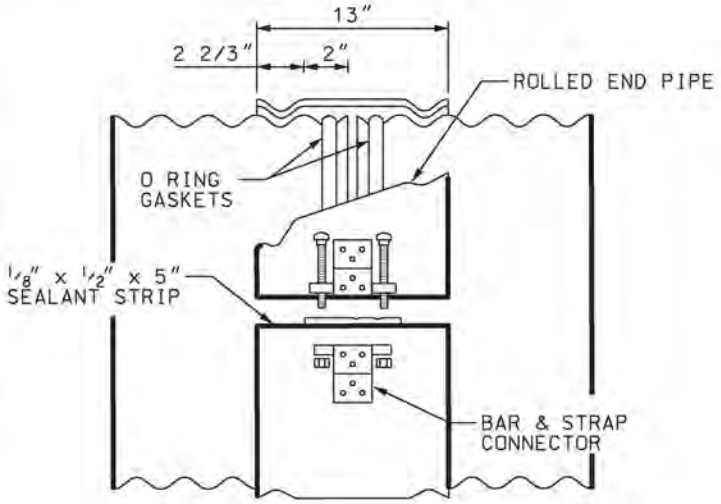


BAND THICKNESS: MATCH PIPE WALL THICKNESS, BUT IN NO CASE LESS THAN 16 GAUGE AND NEED NOT EXCEED 14 GAUGE. USE TWO PIECE BAND FOR PIPE OVER 42" DIAMETER.

TYPE "C"

LONGITUDINAL SEAMS OF CMP AT 45°.

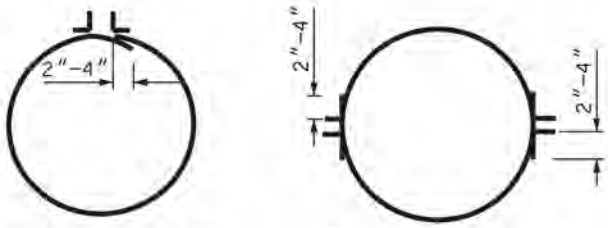


**ONE PIECE BAND**
FOR 18"- 42"DIA.
PIPE CULVERTS.

**TWO PIECE BAND**
FOR 48"- 84"DIA.
PIPE CULVERTS.

ALTERNATE OVERLAPS FOR TWO PIECE BANDS, FOR BOTH TYPES, AS SHOWN ON DIAGRAM

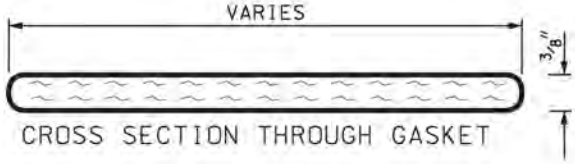


CROSS SECTION THROUGH GASKET

## NOTES:

1. THICKNESS OF CONNECTING BANDS: IN ACCORDANCE WITH STANDARD SPECIFICATIONS.
2. KEEP DIRT & GRAVEL FROM BETWEEN PIPE & BAND.
3. USE A CHAIN HOIST, CHAIN OR CABLE CINCHING TO PRODUCE A TIGHT JOINT BEFORE NUTS ARE TIGHTENED.
4. USE A 2" MINIMUM OVERLAP FOR BANDS.
5. COMPLY WITH TABLE 1 FOR GASKETS DIMENSIONS USE A CLOSED CELL NEOPRENE, SKINNED ALL FOUR SIDES MATERIAL MEETING THE REQUIREMENTS OF ASTM D 1056 GRADE SCE-43L. GASKETS: 1-PIECE CONTINUOUS CONSTRUCTION.
6. FOR FASTENING ANGLES USE FLATHEAD RIVETS FREE OF SHARP POINTS OR EDGES (AASHTO M 36).

REVISIONS

| NO. | DATE | APPR. | REMARKS |
|---|---|---|---|

RTATION
CONSTRUCTION

JAN.01.2005 DATE
JAN.01.2005 DATE

RECOMME
CHAIRMA APPROVE
DEPUTY DIRECTOR

GASKETTED JOINTS OR COUPLING BANDS FOR CMP

STANDARD DRAWING TITLE

STD DWG
DG 7

# END SECTIONS FOR CIRCULAR PIPE CORRUGATIONS

3″ × 1″ ; 2 2/3″ × 1/2″
5″ × 1″ ; 3/4″ × 3/4″ × 7 1/2″
AND 3/4″ × 1″ × 11 1/2″

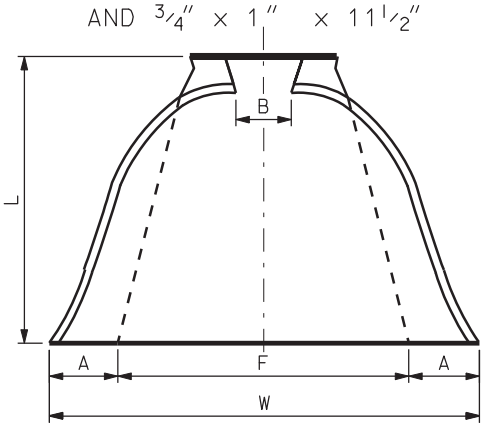


PLAN

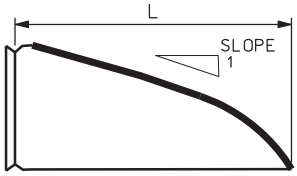


TYPICAL CROSS SECTION

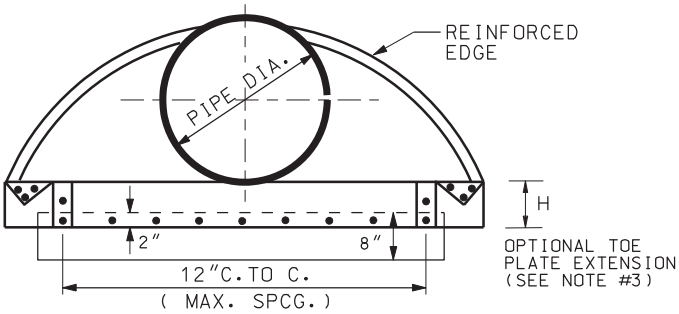


ELEVATION

| LINE NO. | PIPE DIA | THICK--NESS | END SECTION DIMENSIONS | | | | | | |
|---|---|---|---|---|---|---|---|---|---|
| | | | A | B | H | F | L | W MAX.WIDTH | APPROXIMATE AVERAGE END SECTION SLOPE |
| | inch | inch | inch | inch | inch | inch | inch | inch | |
| 1 | 12 | 0.064 | 5 | 7 | 6 | 22 | 21 | 44 | 2 1/4 |
| 2 | 15 | 0.064 | 6 | 8 | 6 | 28 | 26 | 52 | 2 1/4 |
| 3 | 18 | 0.064 | 7 | 10 | 6 | 34 | 31 | 58 | 2 1/8 |
| 4 | 21 | 0.064 | 8 | 12 | 6 | 40 | 36 | 66 | 2 1/8 |
| 5 | 24 | 0.064 | 9 | 13 | 6 | 46 | 41 | 72 | 2 1/8 |
| 6 | 30 | 0.079 | 11 | 16 | 8 | 55 | 51 | 88 | 2 1/8 |
| 7 | 36 | 0.079 | 13 | 19 | 9 | 70 | 60 | 105 | 2 |
| 8 | 42 | 0.109 | 15 | 25 | 10 | 82 | 69 | 122 | 2 1/8 |
| 9 | 48 | 0.109 | 17 | 29 | 12 | 88 | 78 | 131 | 2 |
| 10 | 54 | 0.109 | 17 | 33 | 12 | 100 | 84 | 143 | 2 |
| 11 | 60 | 0.109 | 17 | 36 | 12 | 112 | 87 | 157 | 1 7/8 |
| 12 | 66 | 0.109 | 17 | 39 | 12 | 118 | 87 | 162 | 1 5/8 |
| 13 | 72 | 0.109 | 17 | 44 | 12 | 120 | 87 | 169 | 1 7/8 |
| 14 | 78 | 0.109 | 17 | 48 | 12 | 130 | 87 | 178 | 1 3/8 |
| 15 | 84 | 0.109 | 17 | 52 | 12 | 136 | 87 | 184 | 1 1/3 |
| 16 | 90 | 0.109 | 17 | 58 | 12 | 142 | 87 | 188 | 1 1/4 |
| 17 | 96 | 0.109 | 17 | 58 | 12 | 144 | 87 | 197 | 1 1/8 |

FILL SLOPE NEED NOT MATCH THE END SECTION SLOPE.
SHAPE FILL AT EACH SITE TO FIT.

1. SOME LARGER SIZES MAY REQUIRE FIELD ASSEMBLY.
2. OPTIONAL TOE PLATES MAY BE PROVIDED TO DEPTH SPECIFIED.
3. FOR 78″ x 52″ AND 84″ x 58″ SIZES REINFORCED EDGES TO BE SUPPLEMENTED WITH GALVANIZED STIFFENER ANGLES. THE ANGLES TO BE ATTACHED BY GALVANIZED NUTS AND BOLTS FOR STEEL UNITS OR ALUMINIUM NUTS AND BOLTS FOR ALUMINIUM UNITS.

TYPE 1

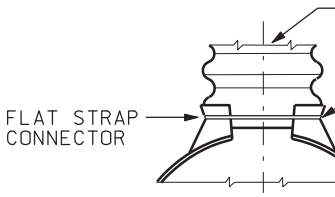


AVALIABLE IN SIZ
THROUGH 24″ ROUN
17″ x 13″ THROUG
28″ x 22″ PIPE-A

TYPE 2

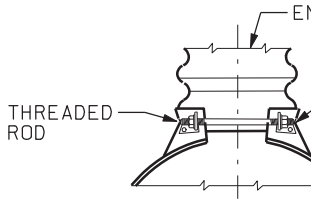


AVALIABLE IN SIZ
THROUGH 96″ ROUN
35″ x 24″ THROUG
57″ x 38″ PIPE-A

TYPE 3

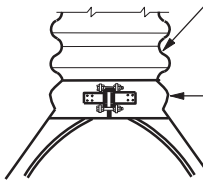

AVAILABLE FOR AL
AND PIPE ARCH S
(TYPE 1 AND TYPE
ARE RECOMMENDED
SMALLER SIZES W

## APPLICABLE SPECIFICATIO
## (CIRCULAR AND ARCH PIPE

1. CONFORM TO:
   AASHTO M 218 (GALVANIZED STEEL
   AASHTO M 197 (ALUMINUM ALLOY S
2. ALL 3 PIECE BODIES TO HAVE 12
   SIDES AND 10 GAUGE MIN.CENTER
   MULTIPLE PANEL BODIES TO HAVE
   ARE TO BE TIGHTLY JOINED BY GA
   OR BOLTS FOR STEEL UNITS AND A
   RIVETS OR BOLTS FOR ALUMINUM U
3. GALVANIZED STEEL OR ALUMINUM T
   BE AVAILABLE AS AN ACCESSORY.
   USE SAME THICKNESS AS THE END
4. GALVANIZED STEEL OR ALUMINUM L
   AVAILABLE AS AN ACCESSORY, WHE
5. END SECTIONS CAN BE USED WITH
   OR PIPE ARCH WALL THICKNESS SP

DGN File:N:\Esd\Standard_Drawings\Imperial\2005Approved\Drainage (DG)\dg08.dgn
25-JAN-2005

END OF PIPE

STRAP BOLT

ES 12"
D AND
H
RCHES

ND OF PIPE

ROD HOLDER

ES 30"
ND AND
GH
RCHES

PIPE TO WHICH END
IS ATTACHED
(REFORMED ENDS NOT
REQUIRED)

DIMPLE BAND COLLAR
BOLTED TO END SECTION
WITH 3/8" BOLTS

LL ROUND
IZES SHOWN
E 2 CONDITIONS
FOR THE
ITH ANNULAR ENDS)

ONS
E)

SHEET)
HEET)

GAUGE MIN.
PANELS.
SEAMS WHICH
LVANIZED RIVETS
LUMINUM
NITS.

OE PLATE TO
WHEN SPECIFIED.
SECTION.

IFTING LUG
N SPECIFIED.

ANY OR PIPE
ECIFIED.

# END SECTIONS FOR CORRUGATED METAL PIPE ARCHES

3" x 1" ; 5" x 1"
AND 2 2/3" x 1/2"

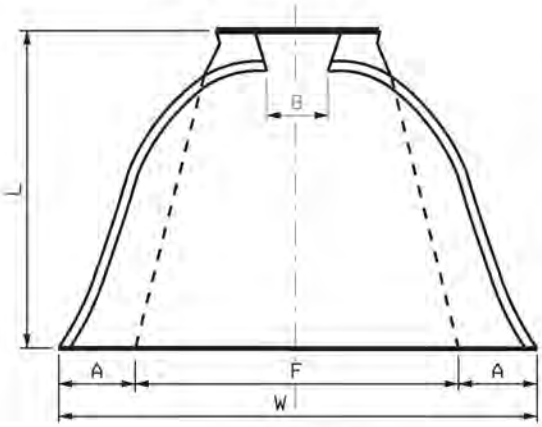


PLAN

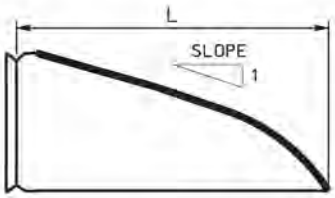


TYPICAL CROSS SECTION

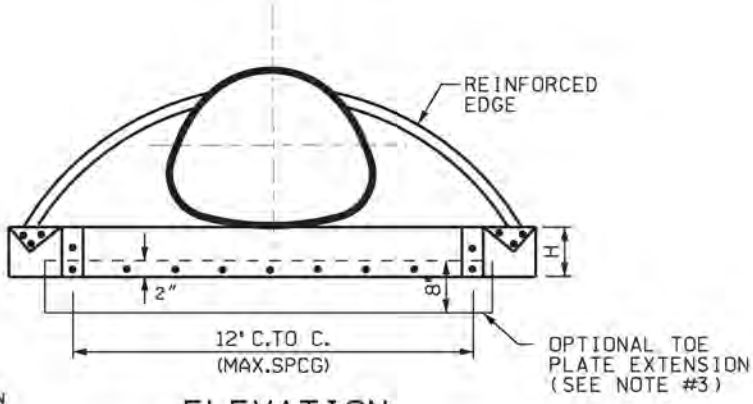


ELEVATION

| LINE NO. | SPAN x RISE | EQUIV ROUND | THICKNESS | | END SECTION DIMENSIONS | | | | | | |
|---|---|---|---|---|---|---|---|---|---|---|---|
| | | | GALV. STEEL | ALUM. | A MIN. | B MAX. | H MIN. | F MIN. | L ±50 | W MAX.WIDTH | APPROXIMATE AVERAGE AND SECTION SLOPE |
| | inch | inch | inch | inch | inch | inch | inch | inch | inch | inch | |
| 1 | 17x13 | 15 | 0.064 | 5 | 5 | 9 | 6 | 28 | 20 | 52 | 2 1/8 |
| 2 | 21x15 | 18 | 0.064 | 6 | 6 | 11 | 6 | 34 | 24 | 58 | 2 |
| 3 | 24x18 | 21 | 0.064 | 7 | 7 | 12 | 6 | 40 | 28 | 63 | 2 1/8 |
| 4 | 28x20 | 24 | 0.064 | 7 | 7 | 16 | 6 | 46 | 32 | 70 | 2 |
| 5 | 35x24 | 30 | 0.079 | 9 | 9 | 16 | 6 | 58 | 39 | 85 | 1 7/8 |
| 6 | 42x29 | 36 | 0.079 | 11 | 11 | 18 | 7 | 73 | 46 | 104 | 1 7/8 |
| 7 | 49x33 | 42 | 0.109 | 12 | 12 | 21 | 9 | 82 | 53 | 117 | 1 3/4 |
| 8 | 57x38 | 48 | 0.109 | 16 | 16 | 26 | 12 | 88 | 62 | 132 | 1 7/8 |
| 9 | 64x43 | 54 | 0.109 | 17 | 17 | 30 | 12 | 100 | 69 | 144 | 1 7/8 |
| 10 | 71x47 | 60 | 0.109 | 17 | 17 | 36 | 12 | 112 | 77 | 156 | 1 7/8 |
| 11 | 77x52 | 66 | 0.109 | 17 | 17 | 36 | 12 | 124 | 77 | 167 | 1 5/8 |
| 12 | 83x57 | 72 | 0.109 | 17 | 17 | 44 | 12 | 130 | 77 | 177 | 1 1/2 |

FILL SLOPE NEED NOT MATCH THE END SECTION SLOPE.
SHAPE FILL AT EACH SITE TO FIT.

1. SOME LARGER SIZES MAY REQUIRE FIELD ASSEMBLY.

2. OPTIONAL TOE PLATES MAY BE PROVIDED TO DEPTH SPECIFIED.

3. FOR 78" x 52" AND 84" x 58" SIZES REINFORCED EDGES TO BE SUPPLEMENTED WITH GALVANIZED STIFFENER ANGLES. THE ANGLES TO BE ATTACHED BY GALVANIZED NUTS AND BOLTS FOR STEEL UNITS OR ALUMINIUM NUTS AND BOLTS FOR ALUMINIUM UNITS.

4. PLACE ANGLE REINFORCMENT UNDER THE CENTER PANEL SEAMS ON THE 88" x 58" SIZES.

REVISIONS

| NO. | DATE | APPR. | REMARKS |
|---|---|---|---|

ORTATION
CONSTRUCTION

RECOMME: JAN.01,2005 DATE

CHAIRMA APPROVEI: JAN.01,2005 DATE

DEPUTY DIRECTOR

METAL CULVERT
END SECTION

STANDARD DRAWING TITLE

STD DWG
DG 8

# SILT FE

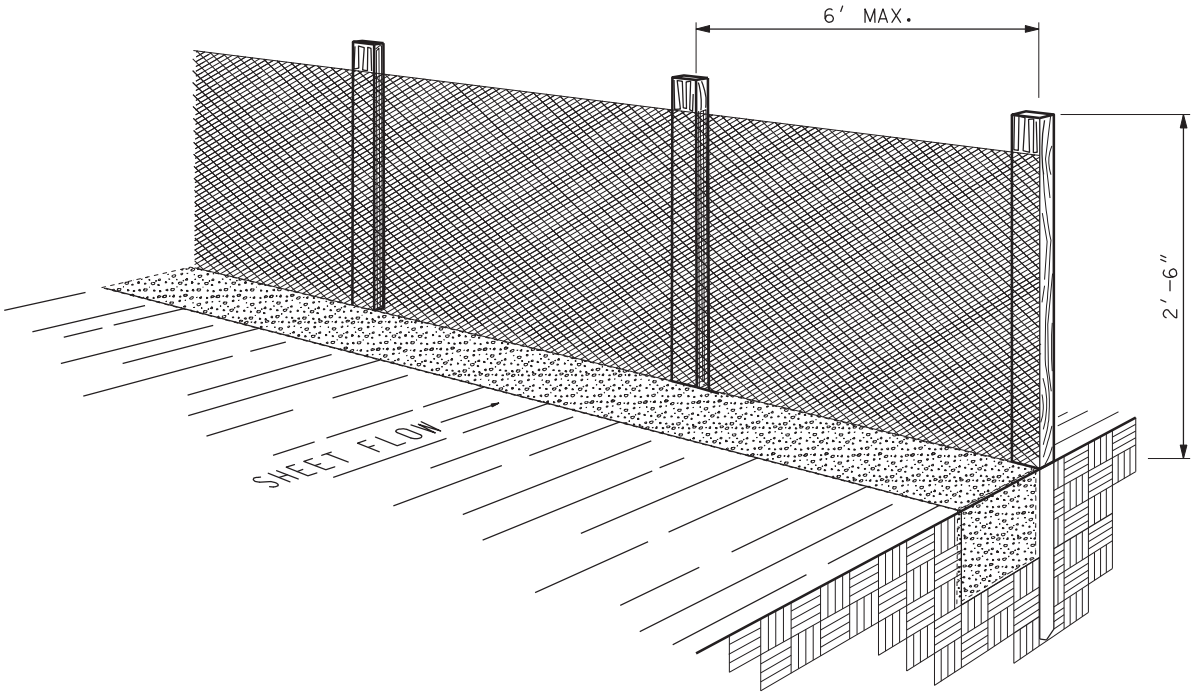


PERSPECTIVE VIEW

NOTES:

1. WHERE POSSIBLE, LAYO
   BEYOND THE TOE OF SL

2. ALIGN THE FENCE ALON

3. WHEN EXCAVATING THE
   PRODUCE NO MORE THAN

4. EXTEND THE BOTTOM 1′
   THREE SIDES OF THE T

5. TO AVOID EXCESSIVE P
   THE FENCE, PROVIDE A
   A CHECK DAM.

6. AVOID USING JOINTS A
   A JOINT IS NECESSARY
   WITH 6″ OVERLAPS AN
   THE POST.

7. MAINTAIN A PROPERLY
   THE DURATION OF THE
   BEEN VEGETATED.

8. REMOVE SEDIMENT AS I
   AREA APPROVED BY THE

25-JAN-2005 DGN File: N:\Esd\Standard Drawings\Imperial\2005Approved\Environmental Controls (EN)\en02.dgn

ENCE

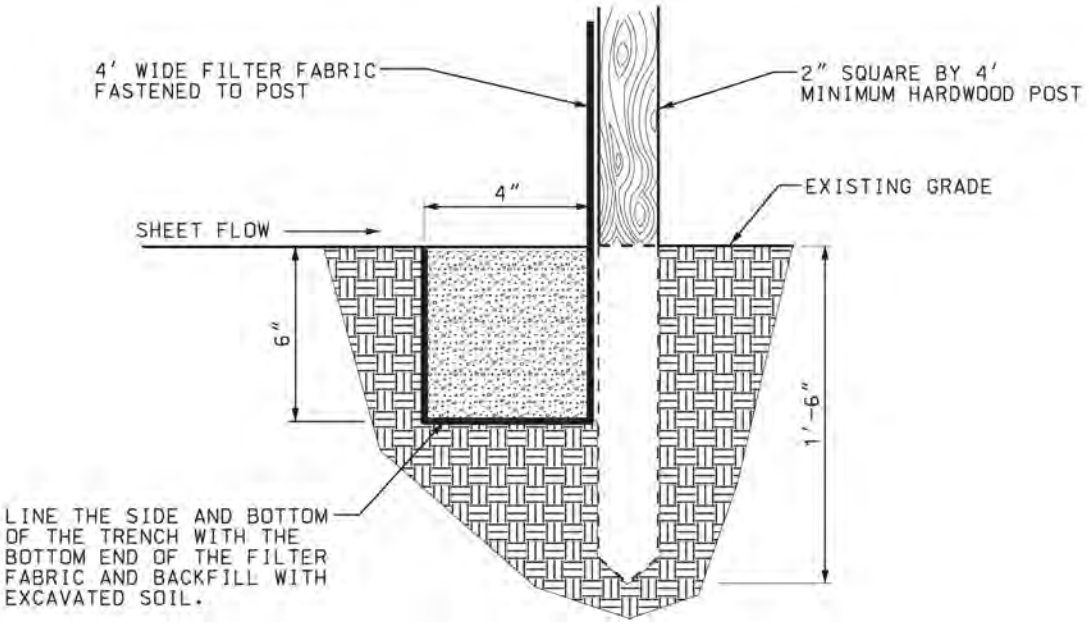


SECTION

UT THE SILT FENCE 5' TO 10'
OPE.

G THE CONTOUR AS CLOSE AS POSSIBLE.

TRENCH. USE MACHINERY THAT WILL
THE DESIRED DIMENSIONS.

– 4" OF FILTER FABRIC TO LINE ALL
RENCH.

ONDING OF WATER AT LOW POINTS ALONG
N OPENING IN THE SILT FENCE AND INSTALL

LONG THE FENCE AS MUCH AS POSSIBLE. IF
. SPLICE THE FILTER FABRIC AT A POST
D SECURELY FASTEN BOTH ENDS TO

FUNCTIONING SILT FENCE THROUGHOUT
PROJECT OR UNTIL DISTURBED AREAS HAVE

T ACCUMULATES AND PLACE IT IN A STABLE
ENGINEER.

REVISIONS

| NO. | DATE | APPR. | REMARKS |
|---|---|---|---|
| | | | |

PORTATION
: CONSTRUCTION

RECOMME JAN.01,2005 DATE

CHAIRMA APPROVE JAN.01,2005 DATE

DEPUTY DIRECTOR

TEMPORARY
EROSION CONTROL
(SILT FENCE)

STANDARD DRAWING TITLE

STD DWG
EN 2

# DROP INLET BARR

## STRAW AND HAY BALE DROP INLET BARRIER

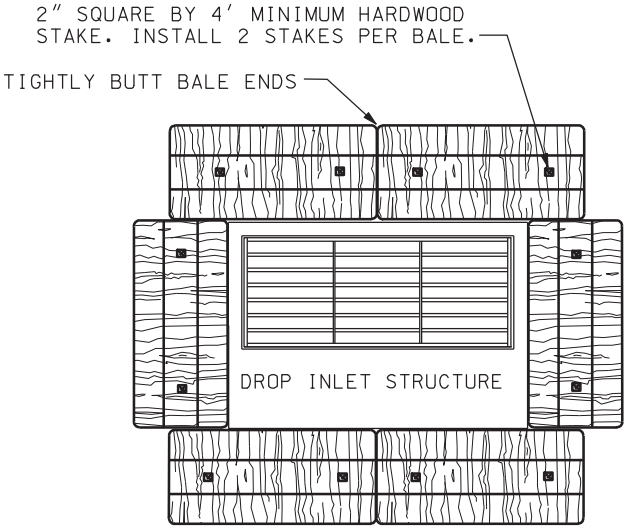


PLAN VIEW

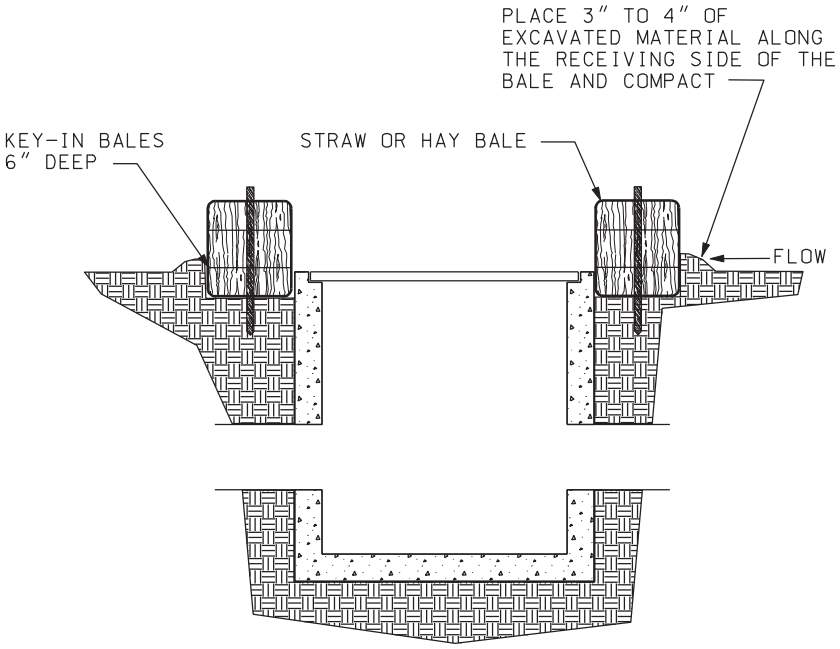


SECTION

NOTES:

1. KEY-IN BALES IN AN EXCAVATED TRENCH AROUND THE PERIMETER OF THE DROP INLET STRUCTURE THAT IS 6" DEEP BY A BALES WIDTH WIDE.
2. OVERLAP ON CORNERS MUST BE AT LEAST HALF A BALE WIDE.
3. DEPENDING ON THE SIZE OF THE INLET STRUCTURE, MORE BALES THAN SHOWN MAY BE REQUIRED.
4. IN MEDIAN AREAS, CONSTRUCT SO THAT THE TOPS OF THE BALES ARE NOT HIGHER THAN THE ADJACENT ROADWAY.
5. MAINTAIN A PROPERLY FUNCTIONING SEDIMENT BARRIER THROUGHOUT CONSTRUCTION OR UNTIL DISTURBED AREAS CONTRIBUTING TO THE INLET HAVE BEEN PAVED OR VEGETATED.
6. REMOVE SEDIMENT AS IT ACCUMULATES AND PLACE IT IN A STABLE AREA APPROVED BY THE ENGINEER.

## SILT FEN DROP INLET B

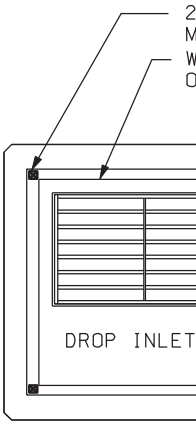


PLAN

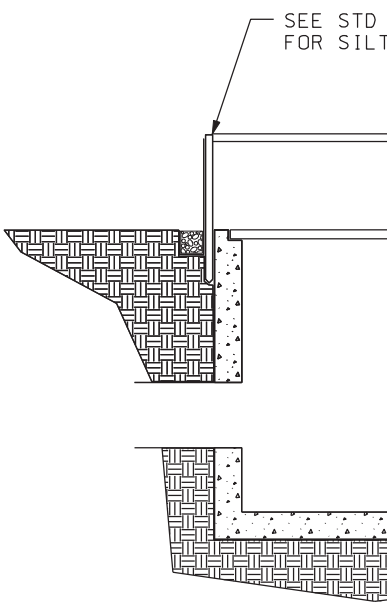


SECT

NOTES:

1. EXCAVATE A TRENCH AROUND THE DROP INLET THAT IS 6"
2. DRIVE POSTS AT EACH CORNE DISTANCE BETWEEN CORNER P ANOTHER POST(S) BETWEEN T
3. CONNECT THE TOPS OF ALL T FRAME MADE OF 2" BY 4" BO FOR FASTENING.
4. IN MEDIAN AREAS, CONSTRUC IS NOT HIGHER THAN THE AD
5. MAINTAIN A PROPERLY FUNCT THROUGHOUT CONSTRUCTION O CONTRIBUTING TO THE INLET
6. REMOVE SEDIMENT AS IT ACC AREA APPROVED BY THE ENGI

DGN File:N:\Esd\Standard.Drawings\Imperial\2005Approved\Environmental Controls (EN)\en04.dgn
25-JAN-2005

RIERS

CE
ARRIER

" SQUARE BY 4'
INIMUM HARDWOOD POST
OODEN SUPPORT FRAME MADE
F 2" BY 4" (NOMINAL) BOARDS

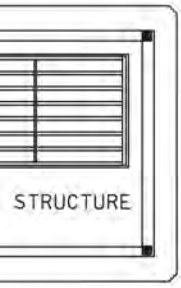


VIEW

DWG EN 2
FENCE DETAIL.

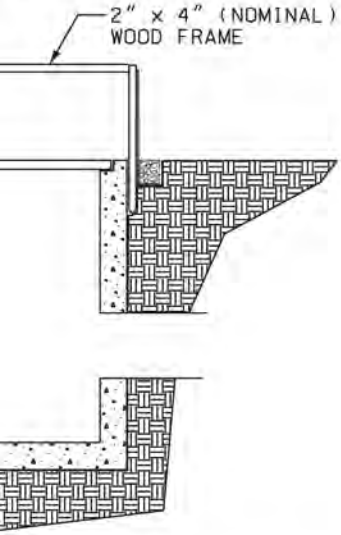


ION

THE CORNER THE PERIMETER OF
DEEP AND 4" WIDE.

R OF THE INLET STRUCTURE. IF THE
OSTS EXCEEDS 4', PLACE
HEM.

HE POSTS WITH A WOODEN SUPPORT
ARDS. USE NAILS OR SCREWS

T SO THAT THE TOP OF THE SILT FENCE
JACENT ROADWAY.

IONING SILT FENCE BARRIER
R UNTIL DISTURBED AREAS
HAVE BEEN PAVED OR VEGETATED.

UMULATES AND PLACE IT IN A STABLE
NEER.

STONE
DROP INLET BARRIER

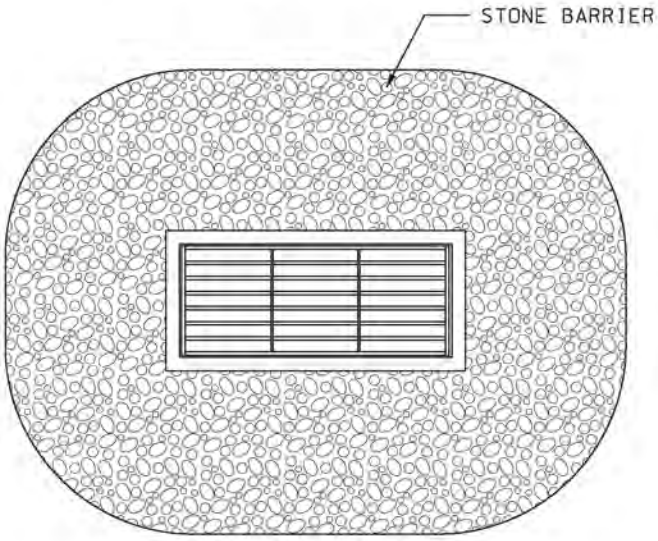


PLAN VIEW

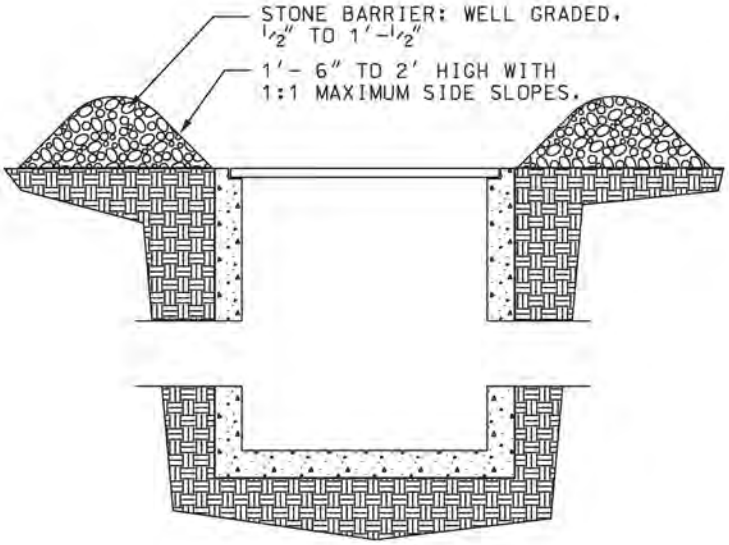


SECTION

NOTES:

1. PLACE STONE BARRIER AS SHOWN AROUND THE INLET OPENING.
2. IN MEDIAN AREAS, CONSTRUCT SO THAT THE TOP OF THE STONE BARRIER IS NOT HIGHER THAN THE ADJACENT ROADWAY.
3. MAINTAIN A PROPERLY FUNCTIONING STONE BARRIER THROUGHOUT CONSTRUCTION OR UNTIL DISTURBED AREAS CONTRIBUTING TO THE INLET HAVE BEEN PAVED OR VEGETATED.
4. REMOVE SEDIMENT AS IT ACCUMULATES AND PLACE IT IN A STABLE AREA APPROVED BY THE ENGINEER.

REVISIONS

| NO. | DATE | APPR. | REMARKS |
|---|---|---|---|
| | | | |

PORTATION
CONSTRUCTION

RECOMME JAN.01,2005 DATE
CHAIRMA APPROVE JAN.01,2005 DATE
DEPUTY DIRECTOR

STANDARD DRAWING TITLE
TEMPORARY
EROSION CONTROL
(DROP INLET BARRIERS)

STD DWG
EN 4

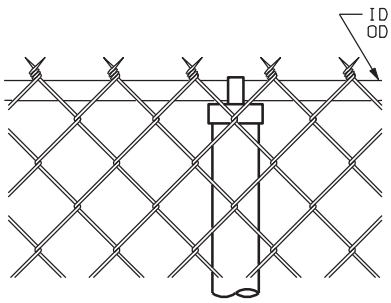


TWISTED & BARBED SELVAGE
TYPE I

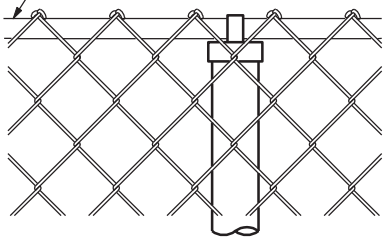

KNUCKLED SELVAGE
TYPE II

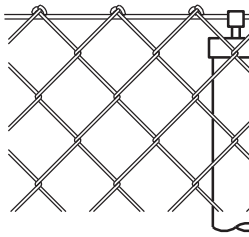

KNUCKLED S
WITH TENS
TYPE

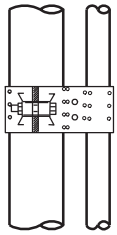

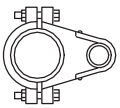

TOP
GATE HINGE

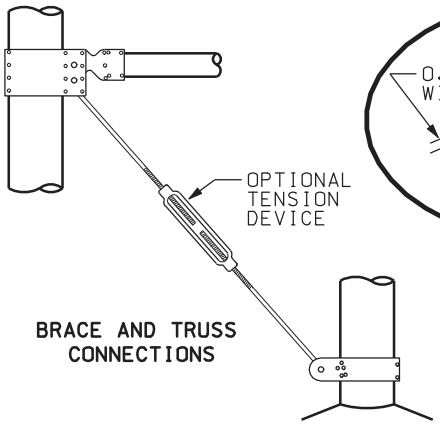


BRACE AND TRUSS
CONNECTIONS

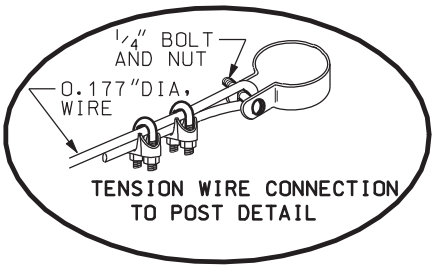


TENSION WIRE CONNECTION
TO POST DETAIL

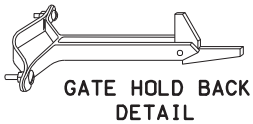

GATE HOLD BACK
DETAIL

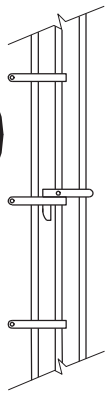

DROP ROD
ASSEMBLY

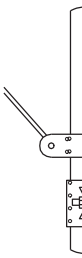

BOTT
HINGE
D

CENTE

TYPICAL MULTIPLE BAY SEGMENT

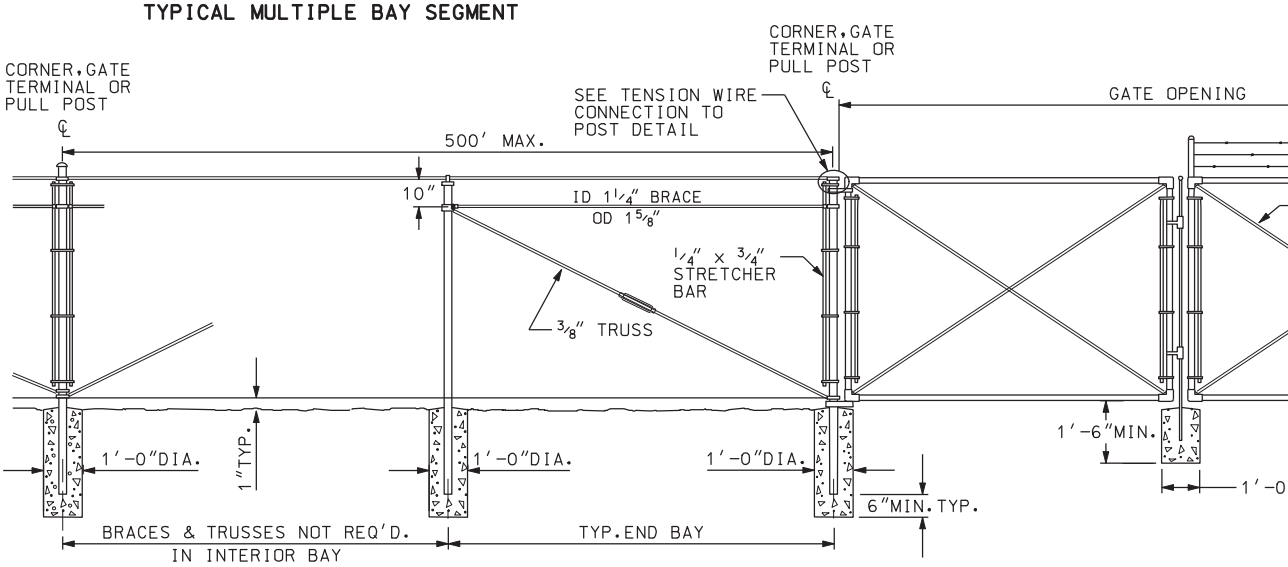


| HEIGHT | GATE OPENING | GATE POST | GATE FRAME |
|---|---|---|---|
| UNDER 6' | SINGLE TO 6' OR DOUBLE TO 12' | 2" | 1" |
| | SINGLE OVER 6' TO 8' OR DOUBLE OVER 12' TO 16' | 2 1/2" | 1 1/2" |
| | SINGLE OVER 8' TO 12' OR DOUBLE 16' TO 24' | 3 1/2" | |
| 6' AND OVER * | SINGLE TO 6' OR DOUBLE TO 12' | 2 1/2" | 1 1/2" |
| | SINGLE OVER 6' TO 13' OR DOUBLE OVER 12' TO 24' | 3 1/2" | |
| | SINGLE OVER 13' TO 18' OR DOUBLE OVER 24' TO 36' | 6" | |
| | SINGLE OVER 18' OR DOUBLE OVER 36' | 8" | |

| HEIGHT OF FABRIC | DEPTH OF POSTS | PL |
|---|---|---|
| 7' | 3' | |
| 6' | 3' | |
| 5' | 3' | |
| 4' | 2' | |
| 3' | 2' | |

* GATES OVER 6' IN HEIGHT AND WIDER THAN 12' WILL REQUIRE 3 INDUSTRIAL PRESSED STEEL HINGES.

DGN File: N:\Esd\Standard Drawings\Imperial\2005Approved\Fence and Gates (FG)\fg06.dgn
25-JAN-2005

## NOTES:

1. POSTS: SCHEDULE 40 PIPE.
   TRIPLE COATED HIGH TENSILE STEEL PIPE OR ROLL-FORMED C-SECTION OF THE SIZE SHOWN IN THE CHART AND AS DEFINED IN THE STANDARD SPECIFICATION. WEIGHT IN lb/ft WITH TOLERANCE OF 5 PERCENT. OTHER TYPES OF POSTS WITH EQUAL OR GREATER SECTION MODULUS MAY BE USED IF APPROVED, IN ADVANCE, BY THE ENGINEER.

2. FABRIC HEIGHTS LESS THAN 5':
   TRUSS RODS AND BRACES NOT REQUIRED.

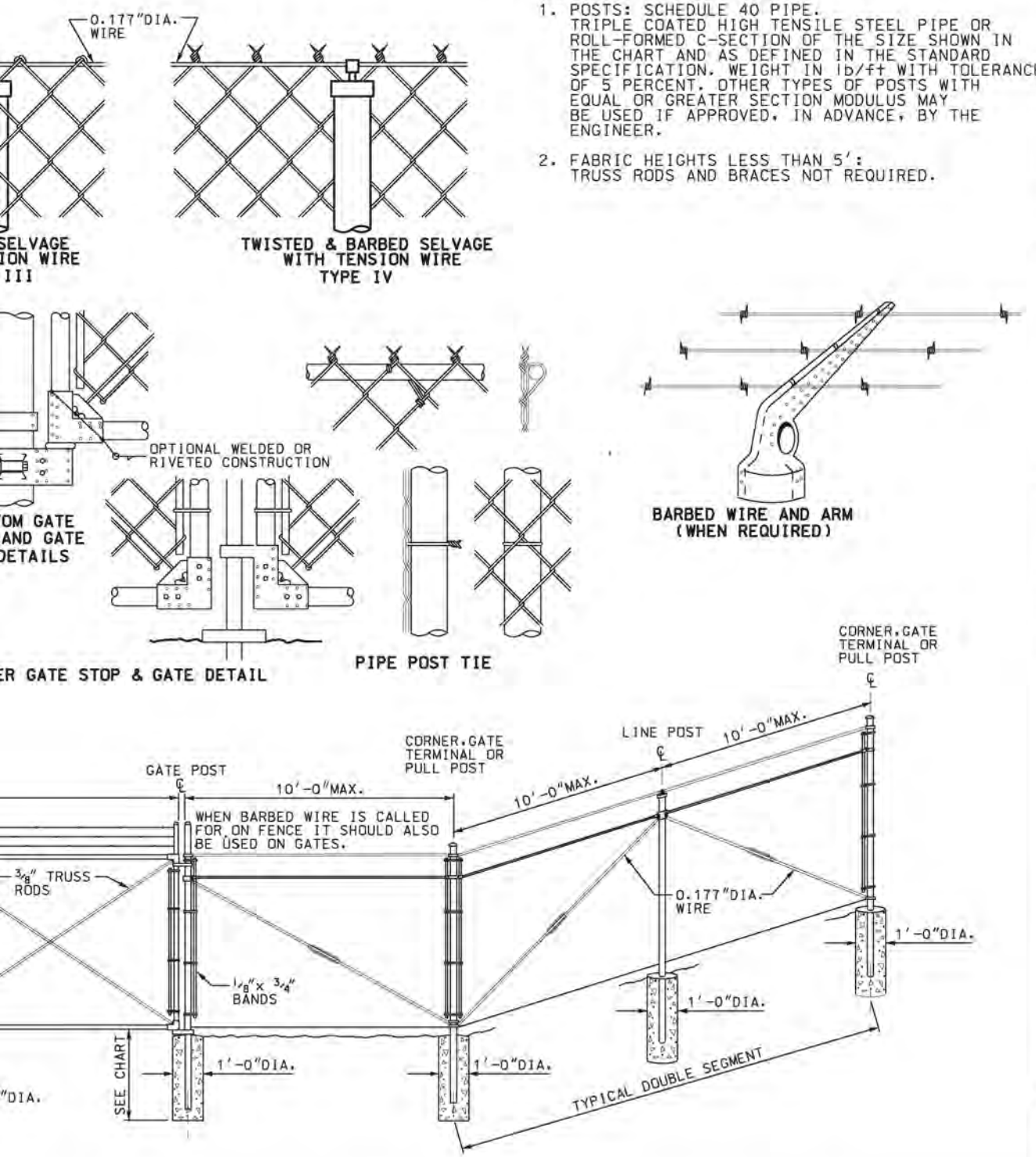


| LENGTH OF END CORNER OR ULL POSTS | LENGTH OF LINE POSTS | SIZE OF POSTS | | | | | | | | | |
|---|---|---|---|---|---|---|---|---|---|---|---|
| | | END, CORNER & PULL POSTS | | | | LINE POST MIN. SIZE | | | | | |
| | | NOM. SIZE | OUTSIDE DIA. | PIPE WEIGHT ASTM A 120 | PIPE WEIGHT TRIPLE COAT | NOM. SIZE | OUTSIDE DIA. | PIPE WEIGHT ASTM A 120 | PIPE WEIGHT TRIPLE COAT | OUTSIDE DIMENSIONS C-SECTION | WT/FT |
| 10' | 9'-8" | 2 1/2" | 2.875" | 5.79 | 4.64 | 2" | 2.375" | 3.65 | 3.11 | 1.875 x 1.625 | 2.28 |
| 9' | 8'-8" | 2" | 2.375" | 3.65 | 3.11 | 1 1/2" | 1.900" | 2.72 | 2.23 | 1.875 x 1.625 | 1.85 |
| 8' | 7'-8" | 2" | 2.375" | 3.65 | 3.11 | 1 1/2" | 1.900" | 2.72 | 2.23 | 1.875 x 1.625 | 1.85 |
| 6' | 5'-8" | 2" | 2.375" | 3.65 | 3.11 | 1 1/2" | 1.900" | 2.72 | 2.23 | 1.875 x 1.625 | 1.85 |
| 5' | 4'-8" | 2" | 2.375" | 3.65 | 3.11 | 1 1/2" | 1.900" | 2.72 | 2.23 | 1.875 x 1.625 | 1.85 |

| NO. | DATE | APPR. | REMARKS |
|---|---|---|---|
| | | | |

REVISIONS

RTATION
CONSTRUCTION

JAN.01,2005
DATE

JAN.01,2005
DATE

RECOMME
CHAIRMA APPROVE
DEPUTY DIRECTOR

CHAIN LINK FENCE

STANDARD DRAWING TITLE

STD DWG
FG 6

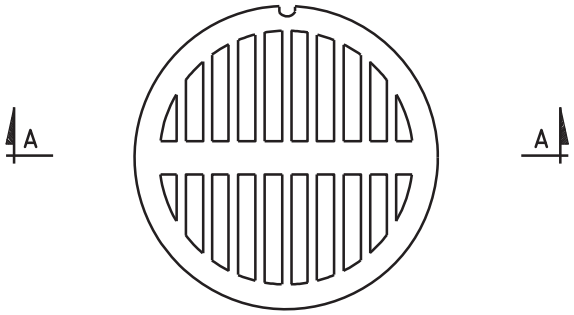


GRATED COVER PLAN

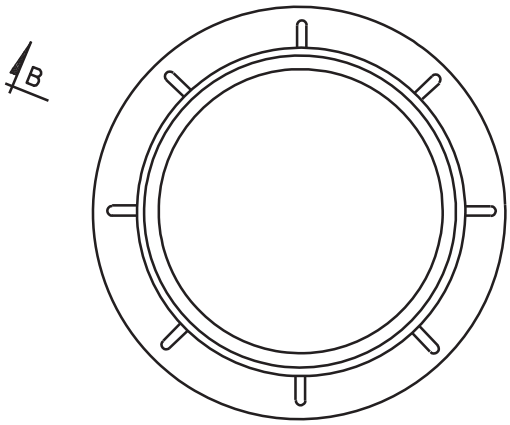


FRAME PLAN

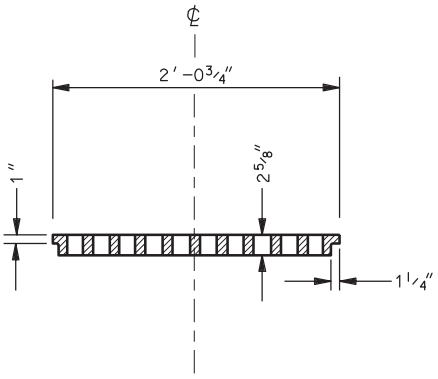


SECTION A-A

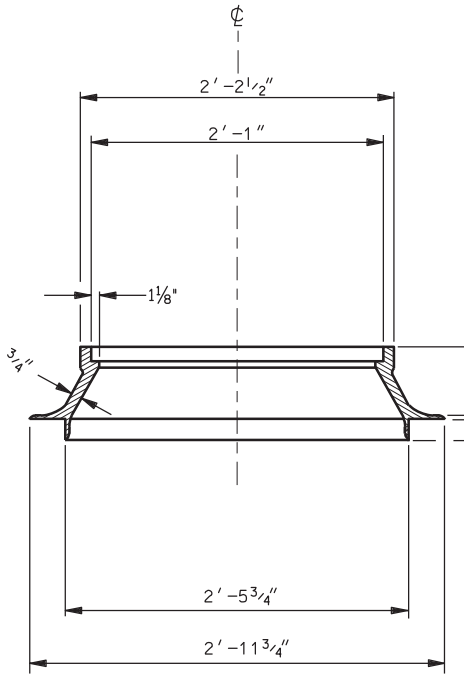


SECTION B-B

25-JAN-2005 DGN File:N:\Esd\Standard.Drawings\Imperial\2005Approved\Grates Frames and Trash Racks (GF)\gf01.dgn

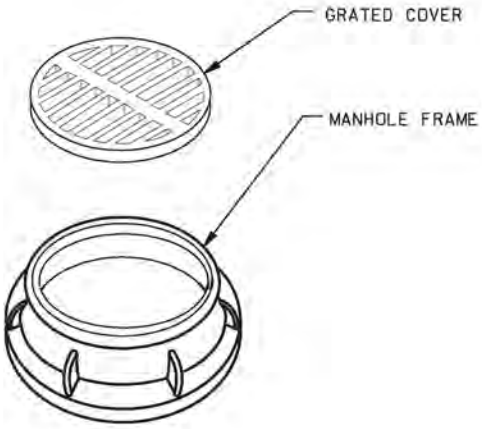


B

## NOTES:

1. MANHOLE FRAME AND COVER FURNISHED IN CAST GRAY IRON CONFORMING TO AASHTO DESIGNATION M 105, CLASS 30B.
2. USE PRECAST CONCRETE GRADE RINGS TO ACHIVE FUNISH GRADE ELEVATION. PRECAST GRADE ARE FURNISHED IN HEIGHTS OF 4", 6" AND 8". TOTAL HEIGHT OF GRADE RINGS NOT TO EXCEED 1'-0". CONFORM ALL PRECAST GRADE RINGS TO AASHTO DESIGNATION M 199.
3. DIMENSION OF GRATE OPENINGS MAY VARY AMONG MANUFACTURES. SUBMIT SHOP DRAWING FOR APPROVAL PRIOR TO INSTALLATION.
4. ESTIMATED WEIGHT OF FRAME AND COVER 385 LBS.

## DESIGN DATA

MS 18 (HS 20) OR INTERSTATE ALTERNATE LOADING IN ACCORDANCE WITH CURRENT AASHTO AND INTERIM SPECIFICATIONS.

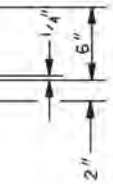


REVISIONS

| NO. | DATE | APPR. | REMARKS |
|---|---|---|---|
| | | | |

PORTATION
: CONSTRUCTION

RECOMME — JAN.01,2005 DATE

CHAIRMA APPROVE — JAN.01,2005 DATE

DEPUTY DIRECTOR

MANHOLE FRAME AND GRATED COVER

STANDARD DRAWING TITLE

STD DWG

GF 1

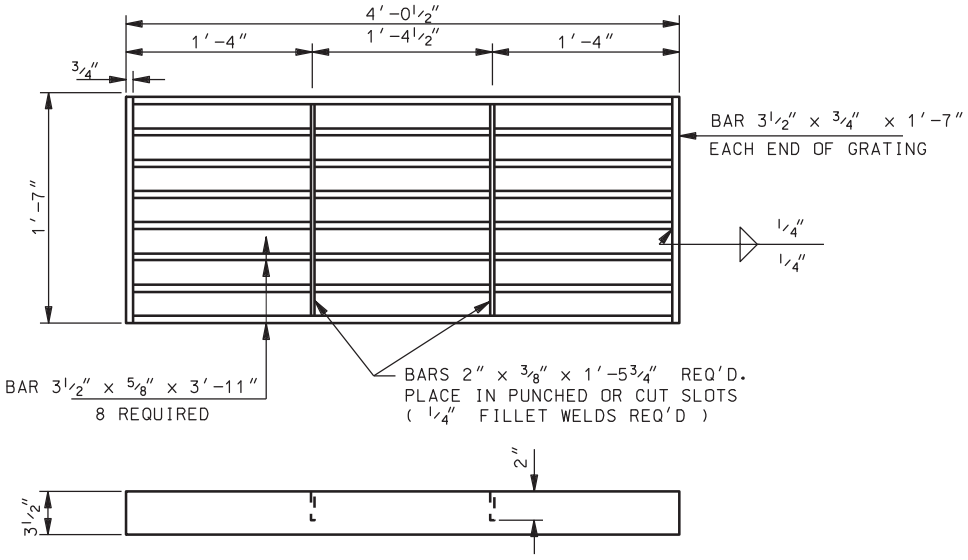


## STANDARD GRATING

GRATE WEIGHT: 272 LBS

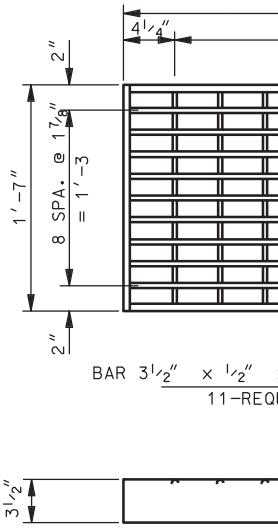


## BICYCLE

GRATE

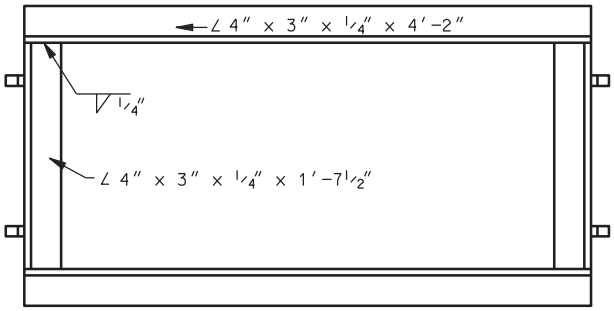


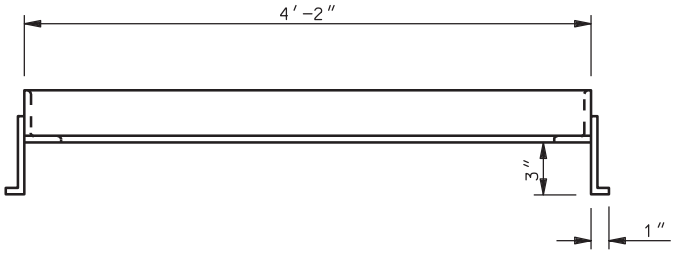


## FRAME

FRAME WEIGHT: 68 LBS

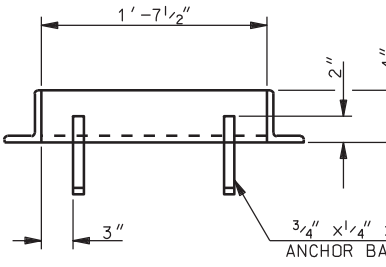


DGN File:N:\Esd\Standard.Drawings\Imperial\2005Approved\Grates Frames and Trash Racks (GF)\gf03.dgn
25-JAN-2005

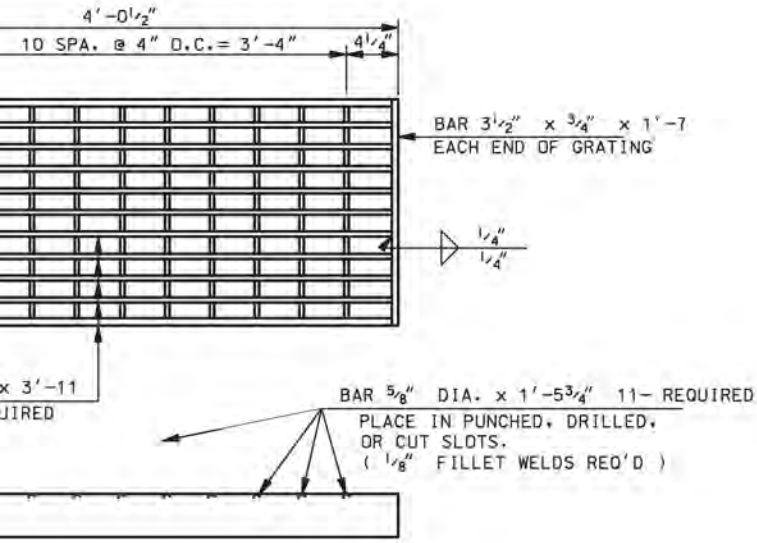


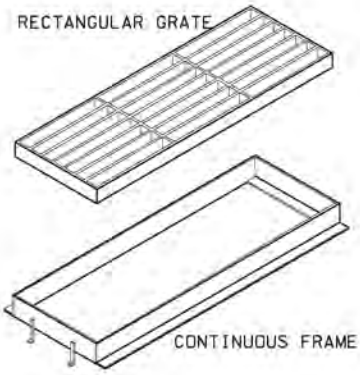


E-SAFE GRATING
E WEIGHT: 297 LBS

## NOTES:

1. HOT-DIP GALVANIZE GRATING AND FRAME AFTER FABRICATION IN ACCORDANCE WITH AASHTO DESIGNATION M 111 (ASTM A 123).
2. STRUCTURAL STEEL GRATING: USE STRUCTURAL CARBON STEEL CONFORMING TO AASHTO DESIGNATION M 270, GRADE 36 (ASTM A 709 GRADE 36).
3. SEE ROADWAY PLANS FOR TYPE OF GRATE REQUIRED.
4. ALL JOINTS REQUIRE 1/4" FILLET WELDS UNLESS NOTED OTHERWISE.

## DESIGN DATA

MS 18 ( HS-20 ) OR INTERSTATE ALTERNATE LOADING IN ACCORDANCE WITH CURRENT ASSHTO AND INTERIM SPECIFICATIONS.

STRUCTURAL STEEL: fs = 20,000 psi

x 6"
RS

REVISIONS

| NO. | DATE | APPR. | REMARKS |
|---|---|---|---|
| | | | |

PORTATION
: CONSTRUCTION

RECOMME: JAN.01,2005 DATE
CHAIRMA APPROVE: JAN.01,2005 DATE
DEPUTY DIRECTOR

STANDARD DRAWING TITLE
RECTANGULAR GRATE AND FRAME

STD DWG
GF 3

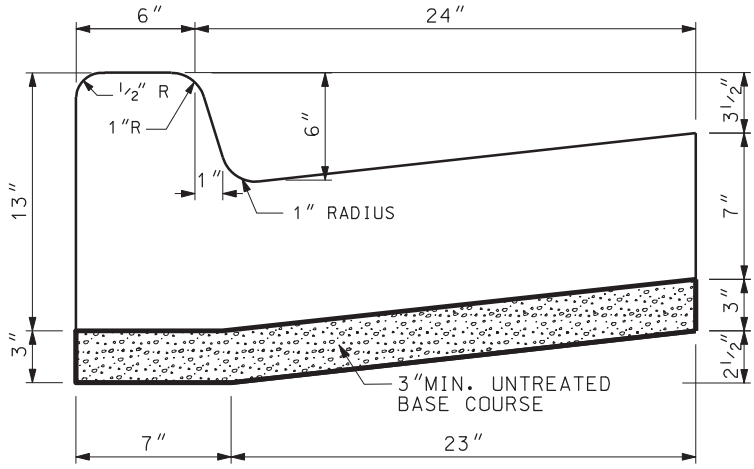


TYPE B1

CURB & GUTTER

AREA = 1.680 SQ.FT.

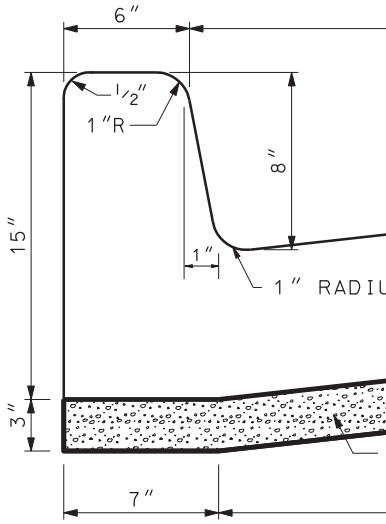


TYPE B

CURB & GU

AREA = 1.765

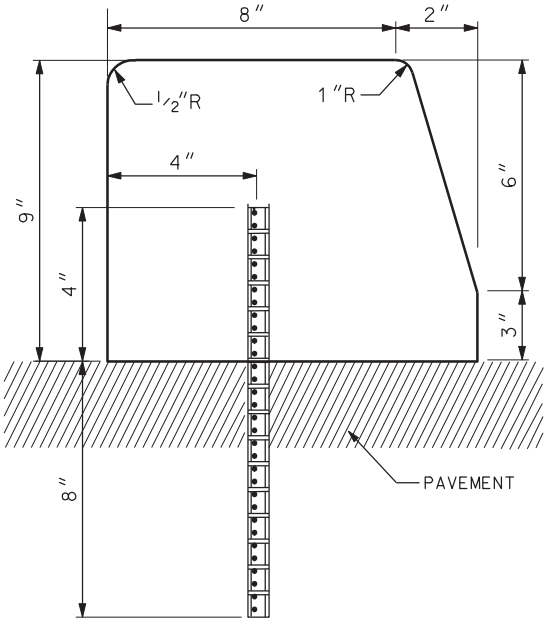


TYPE B3

CURB

AREA = 0.580 SQ.FT.

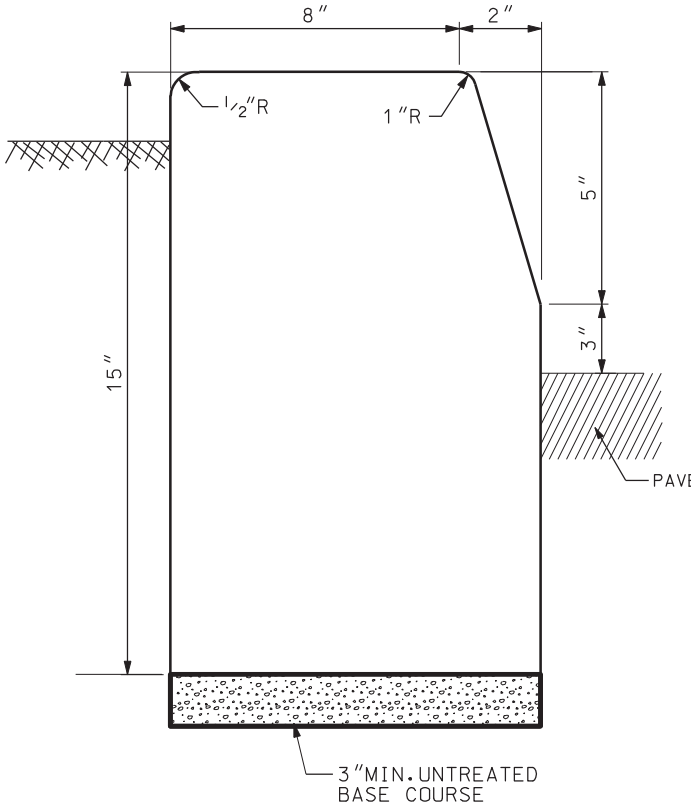


TYPE B4

CURB

AREA = 1.033 SQ.FT.

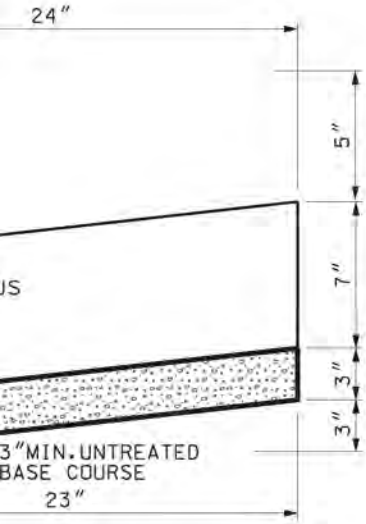


2
TTER
SQ.FT.

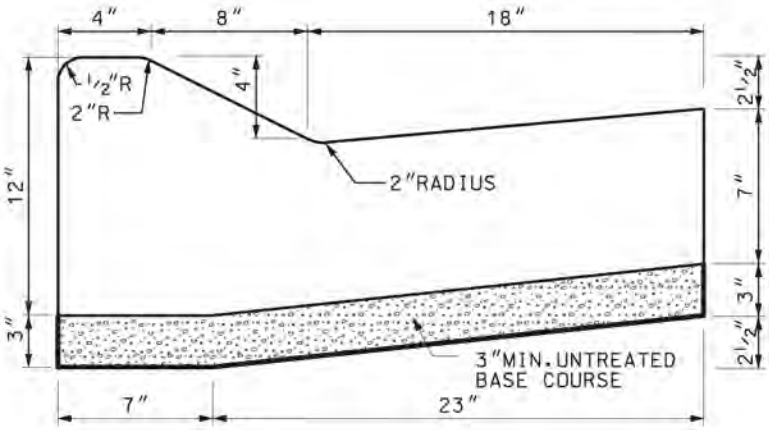


TYPE M1
CURB & GUTTER
AREA = 1.700 SQ.FT.

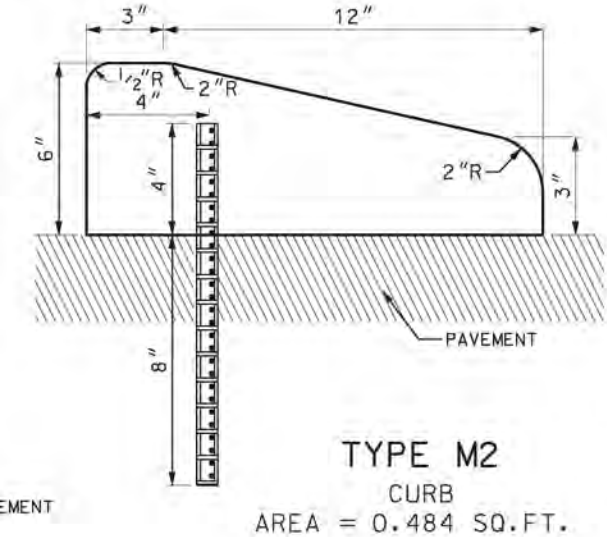


EMENT

TYPE M2
CURB
AREA = 0.484 SQ.FT.

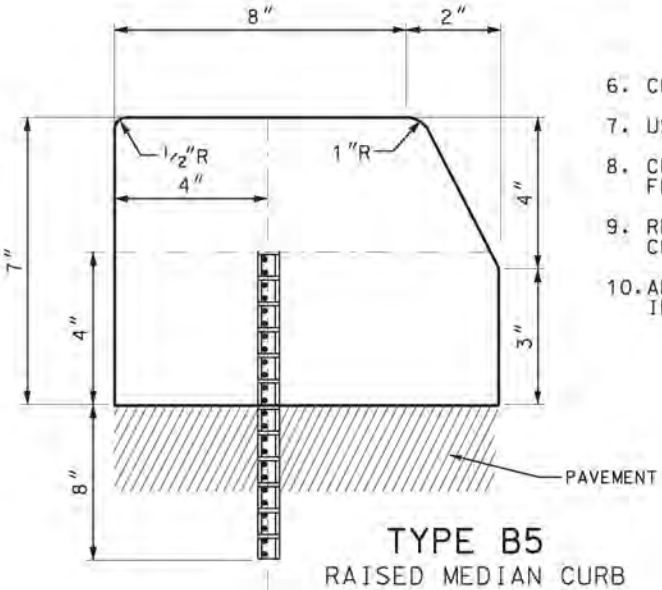


TYPE B5
RAISED MEDIAN CURB
(RMC)
AREA = 0.490 SQ.FT.

## NOTES:

1. DRAINAGE CURBS: TYPE B1,B2 & M1
2. MOUNTABLE CURBS: TYPES M1 & M2 FOR APPLICATION REFER TO THE AASHTO POLICY ON GEOMETRIC DESIGN OF HIGHWAYS AND STREETS.
3. CURBS TYPES B1, B2, B3, B4 & B5 USED WITH DESIGN SPEED UP TO 40 MPH EXCEPT IN PREDOMINATELY URBAN OR RAPIDLY DEVELOPING RURAL AREAS WHERE CURB MAY BE USED WITH DESIGN SPEEDS UP TO 50 MPH.
4. DOWELS: 3/4" DEFORMED BARS ON 5' MAX.CENTERS.
5. PRECAST CURBS:
   A. MINIMUM OF 10' IN LENGTH.
   B. DOWELS AT A MINIMUM OF 3 PER 10' LENGTH.
   C. INCLUDE ADEQUATE REINFORCING STEEL TO WITH STAND HANDLING STRESSES.
6. CONCRETE CLASS AA "AE"
7. USE TYPE B4 ONLY AS BORDER CURB.
8. CURB HEIGHT IS MEASURED VERTICALLY FROM THE FLOW LINE OF THE GUTTER TO TOP BACK OF CURB.
9. REFER TO ROADWAY PLANS FOR UNTREATED BASE COURSE SIZE.
10. ADJUST CURB FACE TO 4" MAXIMUM HEIGHT WHEN USED IN CONJUNCTION WITH GUARDRAIL BARRIER.

| NO. | DATE | APPR. | REMARKS |
|---|---|---|---|
| | | | |

REVISIONS

PORTATION
: CONSTRUCTION

RECOMME — JAN.01,2005 DATE
CHAIRMA APPROVE — JAN.01,2005 DATE
DEPUTY DIRECTOR

STANDARD DRAWING TITLE
CONCRETE
CURB AND GUTTER

STD DWG
GW 2

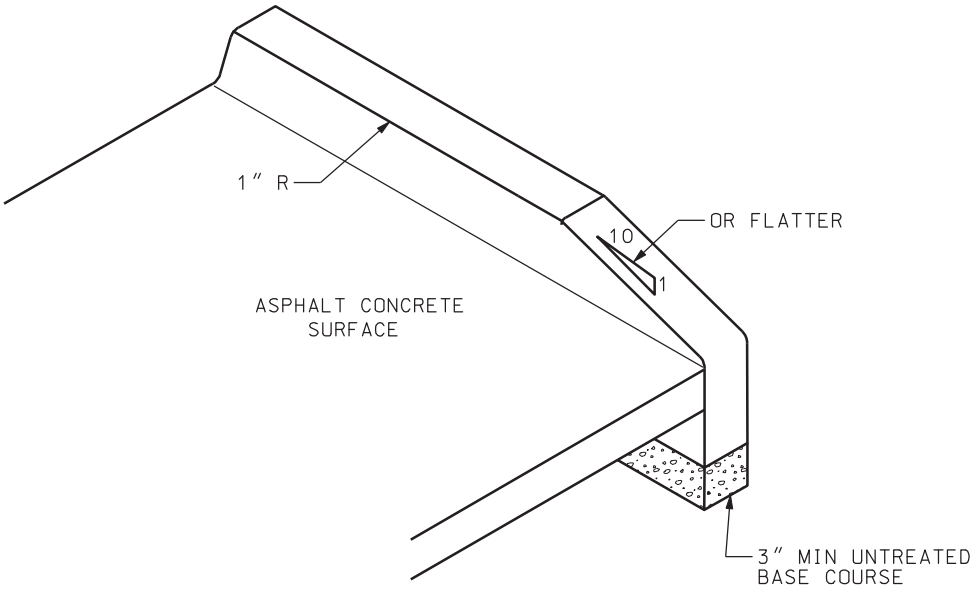


TYPICAL
CURB END DETAIL

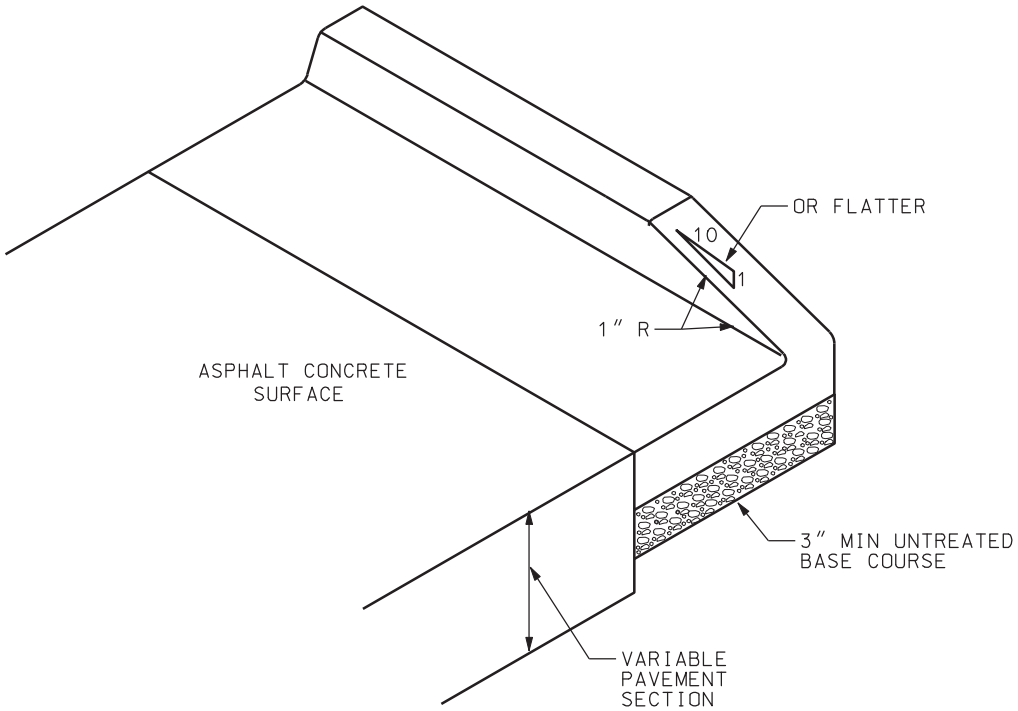


TYPICAL
CURB & GUTTER
END DETAIL

25-JAN-2005 DGN File:N:\Esd\Standard.Drawings\Imperial\2005Approved\General Road Work (GW)\gw03.dgn

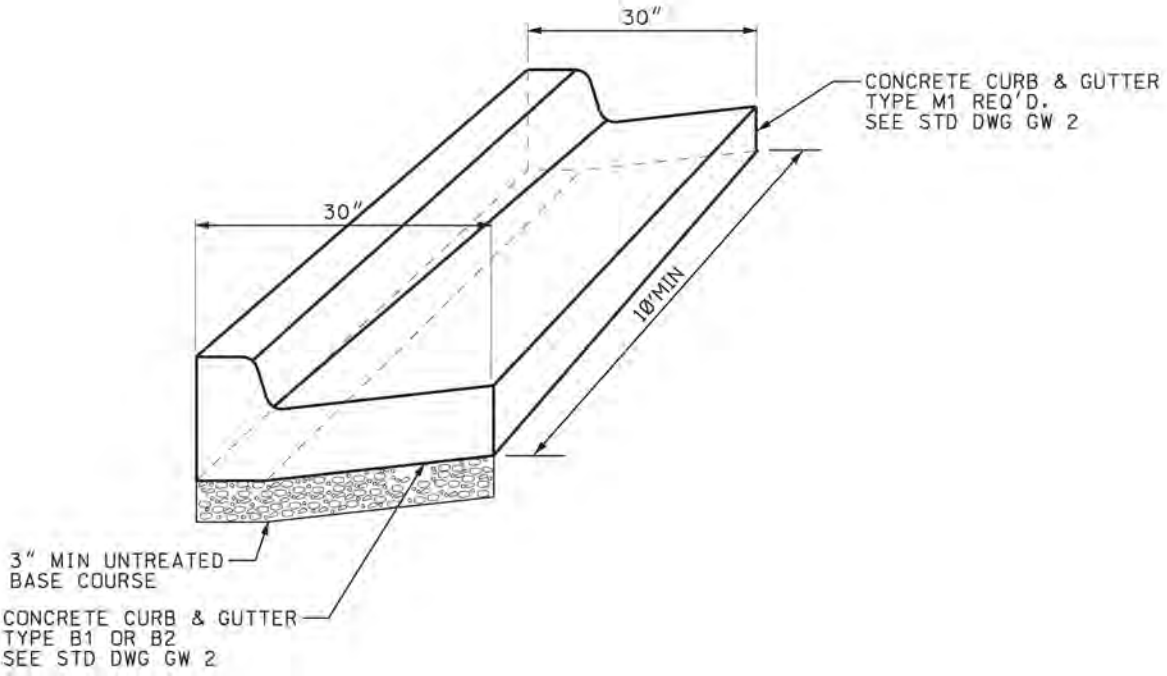


CURB & GUTTER
TRANSITION DETAIL

REVISIONS

| NO. | DATE | APPR. | REMARKS |
|---|---|---|---|
| | | | |

PORTATION
: CONSTRUCTION

RECOMME: JAN.01,2005 DATE

CHAIRMA APPROVE: JAN.01,2005 DATE

DEPUTY DIRECTOR

STANDARD DRAWING TITLE

CONCRETE
CURB AND GUTTER
DETAILS

STD DWG
GW 3

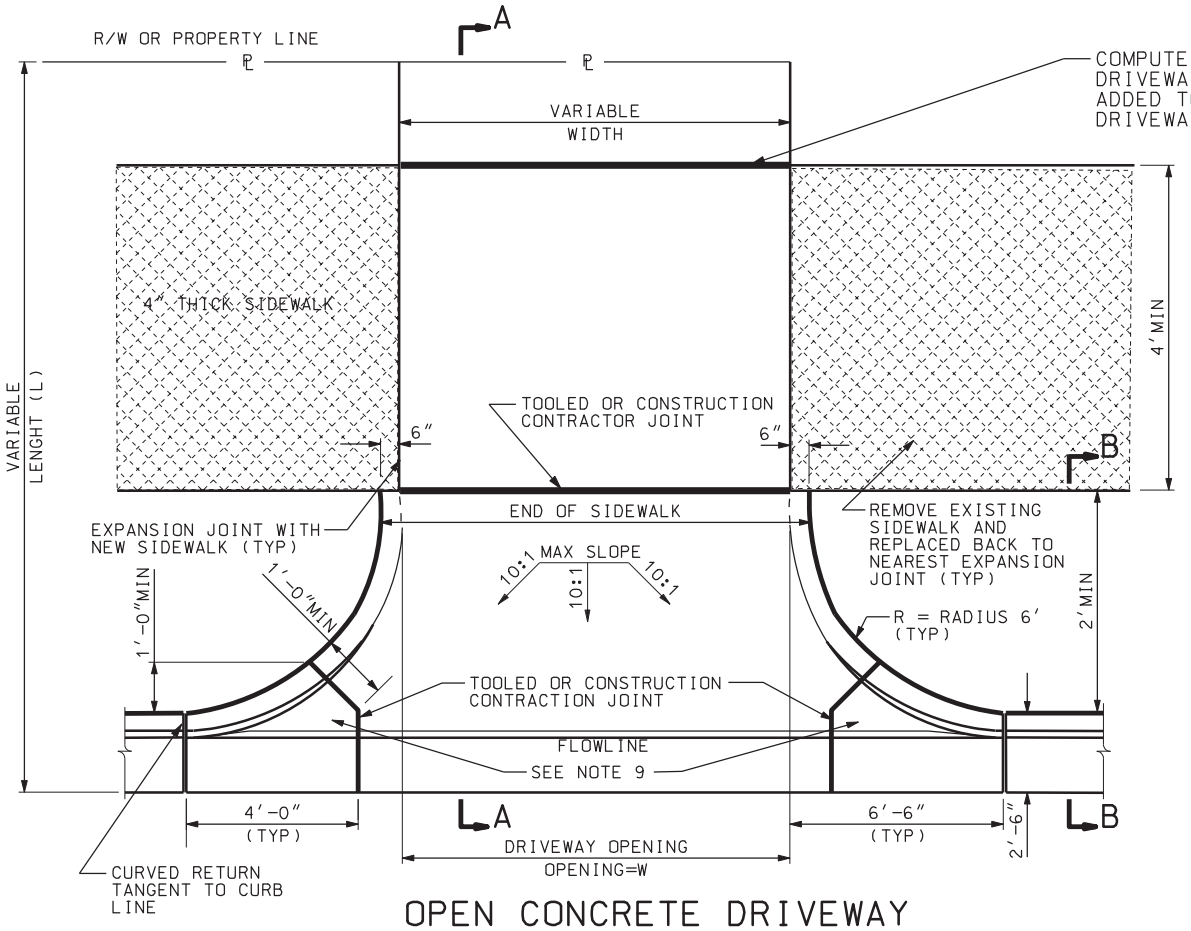


OPEN CONCRETE DRIVEWAY

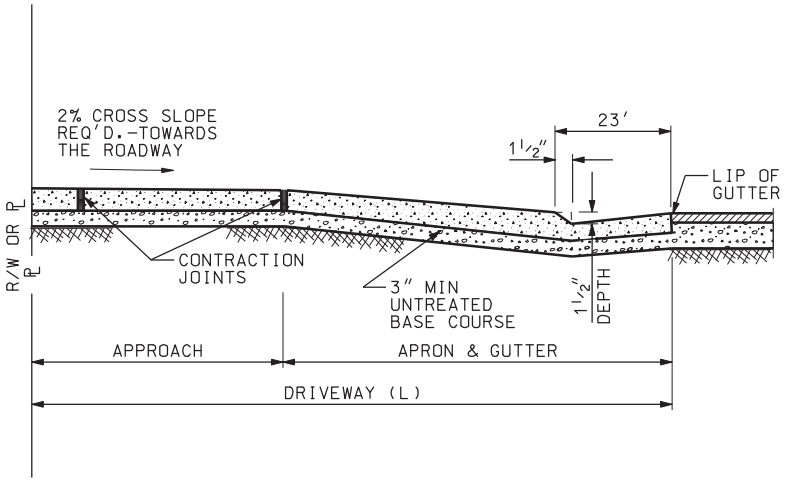


SECTION A-A

| DRIVEWAY RADIUS AND FLARE | | |
|---|---|---|
| OPEN CONCRETE DRIVEWAY | ft² | FLARE |
| 6' RADIUS | 44.13 | 12:1 |
| | | 1- TYPE " |
| | | 2- TYPE " |
| | | 3- TYPE " |
| NOTE: | | |
| ft2 QUANTITY = BOTH SIDES OF | | |
| DRIVEWAY ROUNDED TO THE | | 10:1 |
| NEAREST 0.5 ft² | | 1- TYPE " |
| | | 2- TYPE " |
| | | 3- TYPE " |
| | | |
| | | |

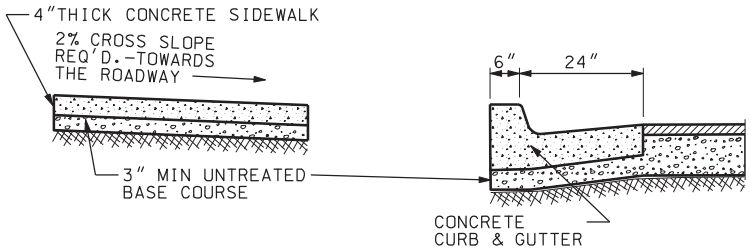


SECTION B-B

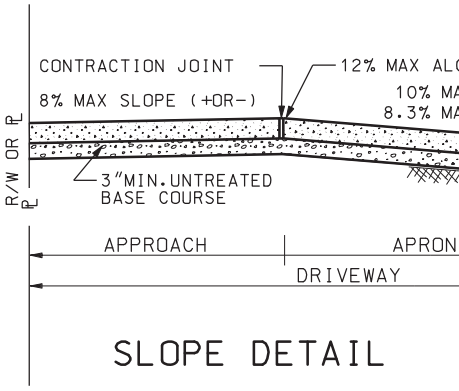


SLOPE DETAIL

DGN File: N:\Esd\Standard.Drawings\Imperial\2005Approved\General Road Work (GW)\gw04.dgn

25-JAN-2005

FOOT QUANTITIES FOR THE
ACH. APRON & GUTTER AND
UANTITIES GIVEN IN THE
S AND FLARE FOOTAGE CHART.

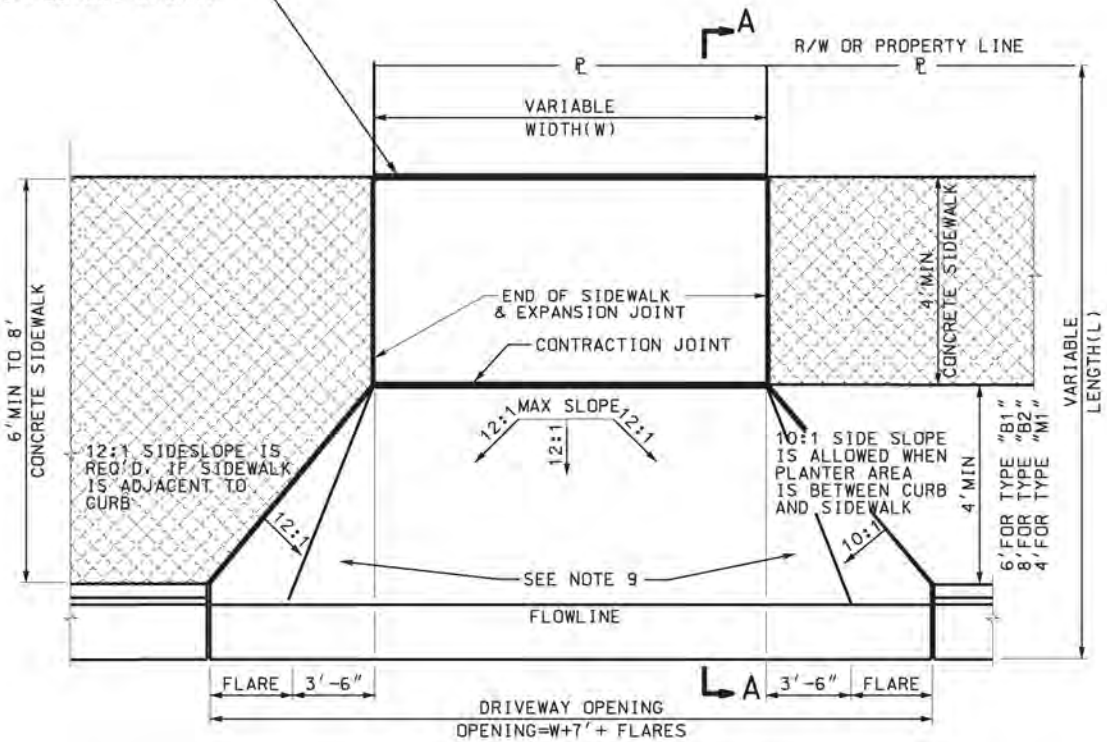


# FLARED DRIVEWAY

| AREA CHART | |
|---|---|
| D DRIVEWAY | $ft^2$ |
| FLARES | |
| B1" CURB & GUTTER | 88.09 |
| B2" CURB & GUTTER | 129.92 |
| M1" CURB & GUTTER | 44.56 |
| | |
| | |
| FLARES | |
| B1" CURB & GUTTER | 78.90 |
| B2" CURB & GUTTER | 115.39 |
| M1" CURB & GUTTER | 34.66 |
| | |
| | |

## NOTES:

1. DRIVEWAY DIMENSIONS (MAX.& MIN.) ARE LOCATED IN UDOT "MANUAL FOR THE ACCOMMODATION OF UTILITIES AND THE CONTROL AND PROTECTION OF STATE HIGHWAY RIGHTS OF WAY" CURRENT EDITION.
2. MAXIMUM DISTANCE BETWEEN TOOLED OR CONSTRUCTION JOINTS 10' LATERALLY AND LONGITUDINALLY SPACED EQUALLY.
3. PROVIDE EXPANSION JOINTS WHERE CONCRETE SIDEWALK BUTTS AGAINST CONCRETE DRIVEWAYS AND IN CONCRETE SIDEWALK AT 30 FEET INTERVALS.
4. DO NOT PAY FOR SIDEWALK INSIDE THE DRIVEWAY LIMITS (WIDTH AND LENGTH)
5. OPEN CONCRETE DRIVEWAY - FLARED DRIVEWAY
   A: RESIDENTIAL = 6 inch THICK. COMMERCIAL = 7 inch THICK
   B: EXTEND DRIVEWAY APPROACH TO R/W - PROPERTY LINE
   C: IF THE GRADES SHOWN ON THE SLOPE DETAIL CANNOT BE MET, DEPRESS THE LONGITUDINAL SLOPE OF THE SIDEWALK AT A RATE OF 5 PERCENT TO MEET THE APRON - APPROACH ELEVATION.
6. USE CLASS AA(AE) CONCRETE FOR SIDEWALK AND DRIVEWAYS
7. USE UNTREATED BASE COURSE UNDER ALL SIDEWALKS AND DRIVEWAYS.
8. 10:1 = 10% SLOPE; 12:1 = 8.33% SLOPE.
9. QUANTITIES FOR DRIVEWAYS INCLUDE RADIUS AND FLARES TO LIP OF GUTTER.

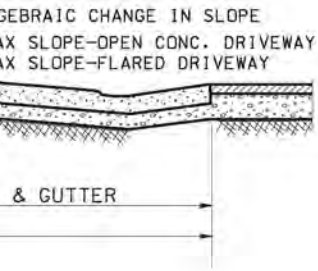


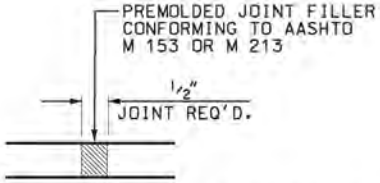


# EXPANSION-CONTRACTION JOINT DETAIL

REVISIONS

| NO. | DATE | APPR. | REMARKS |
|---|---|---|---|
| | | | |

PORTATION
: CONSTRUCTION

JAN.01,2005
DATE

JAN.01,2005
DATE

S

RECOMME

CHAIRMA
APPROVE

DEPUTY DIRECTOR

CONCRETE DRIVEWAYS
AND SIDEWALKS

STANDARD DRAWING TITLE

STD DWG
GW 4

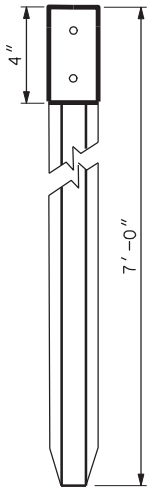


TYPE I

SINGLE UNIT

SEE NOTE 1

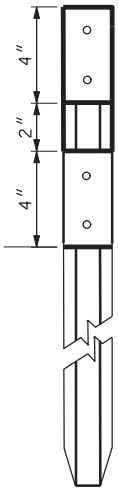


TYPE II

DOUBLE UNIT

SEE NOTE 1

( OF COLOR SPECIFIED )

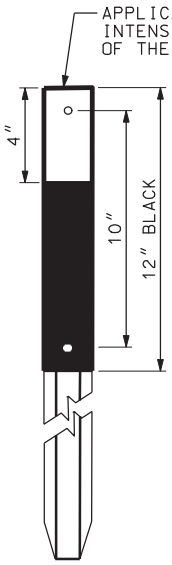


CULVERT MARKER

SEE NOTE 2

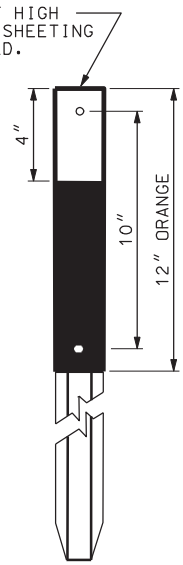


MAINTENANCE MARKER

SEE NOTE 2

FREE CROS MARK

SEE NO

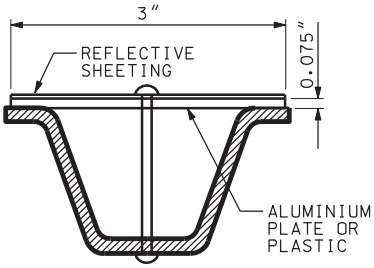


DELINEATOR INSTALLATION

SEE NOTE 8

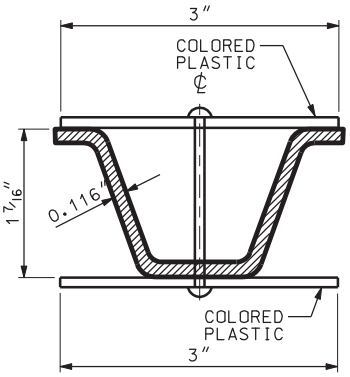


CULVERT/MAINTENANCE MARKER INSTALLATION

FOR 2 LB/FT POST WITH COLORED PLASTIC ATTACHED. SEE NOTE 2.

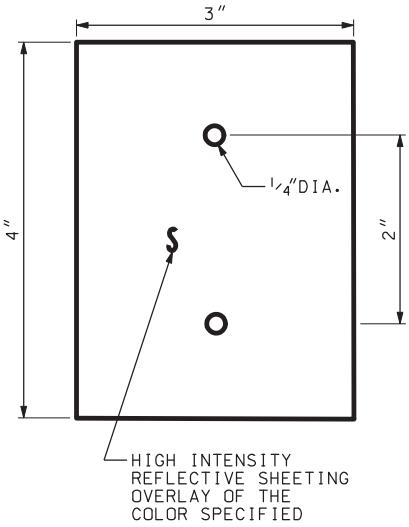


DELINEATOR PLATE

SEE NOTE 8

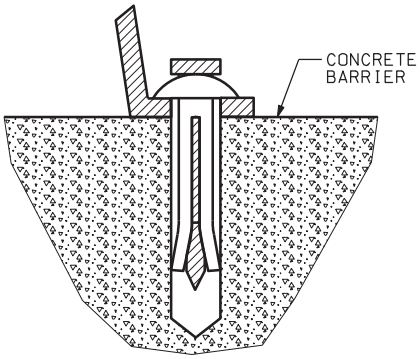


METAL HIT ANCHORS

SEE NOTE 3

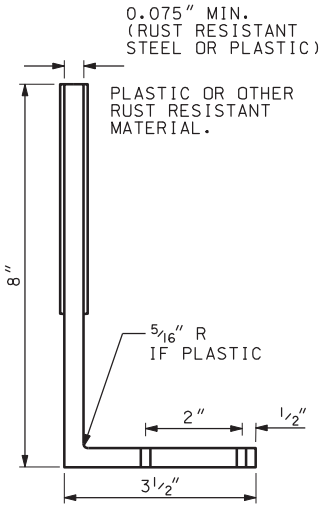


"L" REFLE

DGN File:N:\Esd\Standard Drawings\Imperial\2005Approved\General Road Work (GW)\gw09.dgn
25-JAN-2005

# NOTES:

1. USE GALVANIZED STEEL POSTS FABRICATED WITH 5/16" HOLES ON 1" SPACING. PUNCH HOLES ON THE CENTERLINE OF THE POST. PLACE TOP HOLE 1" FROM THE TOP OF POST. PUNCH HOLES THE FULL LENGTH OF THE POST.
2. PAINT THE SPECIFIED COLOR OR ATTACH 3" X 12" X 1/10" COLORED PLASTIC ON CULVERT AND MAINTENANCE MARKERS. USE BLACK ABOVE ORANGE WHEN BOTH MARKERS (MAINTENANCE AND CULVERT) ARE REQUIRED ON ONE DELINEATOR.
3. MOUNT BARRIER REFLECTORS ON CONCRETE AND BRIDGE PARAPETS WITH TWO 1/4" X 1/4" METAL HIT ANCHORS.
4. MOUNT BARRIER REFLECTORS ON CONCRETE BARRIER AS SHOWN ON STD DWG BA 1B.
5. MOUNT STRAIGHT REFLECTORS ON WOOD POSTS WITH TWO 2 1/2" ELECTRO GALVANIZED RING SHANK NAILS WITH NEOPRENE WASHERS.
6. MOUNT STRAIGHT REFLECTORS ON STEEL POSTS WITH TWO 1/4" X 3/4" BOLTS AND SELF LOCKING NUTS.
7. MOUNT BARRIER REFLECTORS ON GUARDRAIL POSTS AS SHOWN ON STD DWG BA 4A.
8. INSTALL DELINEATOR PLATE ON THE SIDE OF THE POST FACING TRAFFIC. PREFERRED ORIENTATION OF POST TO ONCOMING TRAFFIC IS AS SHOWN. HOWEVER, EXISTING POST WITH THE OPPOSITE ORIENTATION IS ACCEPTABLE. INSTALL ON OPEN FACE SIDE WITH TWO 1/4" DIAMETER EXPANSION RIVETS (GRIP RANGE 1 3/8" TO 1 5/8"). INSTALL ON OPPOSITE SIDE WITH TWO 1/4" POP RIVETS WITH BACKING WASHERS.
9. REFER TO STD DWG ST 2 FOR FREEWAY CROSSOVER DELINEATION MARKINGS AND HARDWARE.

EWAY
SSOVER
KER
OTE 9

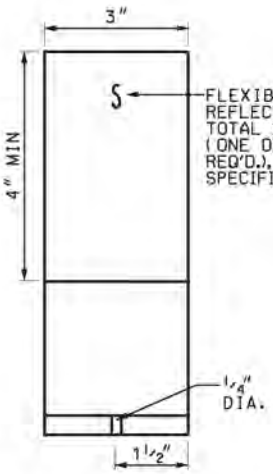


ECTOR

BARRIER REFLECTORS
SEE NOTES 3, 4, 5, 6, 7

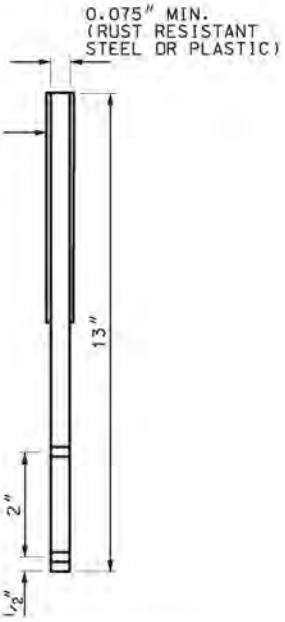


STRAIGHT REFLECTOR

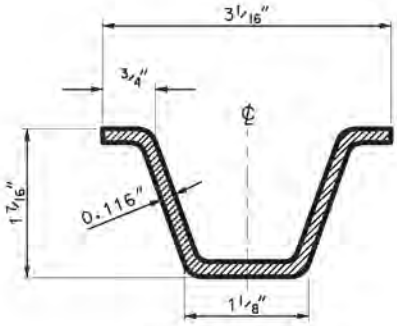


CROSS SECTION
FOR 2 LB/FT POST

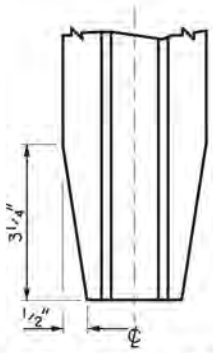


POST TAPER DETAIL

REVISIONS

| NO. | DATE | APPR. | REMARKS |
|---|---|---|---|
| | | | |

RTATION
: CONSTRUCTION

RECOMME JAN.01,2005 DATE
CHAIRMA APPROVE JAN.01,2005 DATE
DEPUTY DIRECTOR DATE

DELINEATION HARDWARE

STANDARD DRAWING TITLE

STD DWG
GW 9

## ENTRANCE RAMP

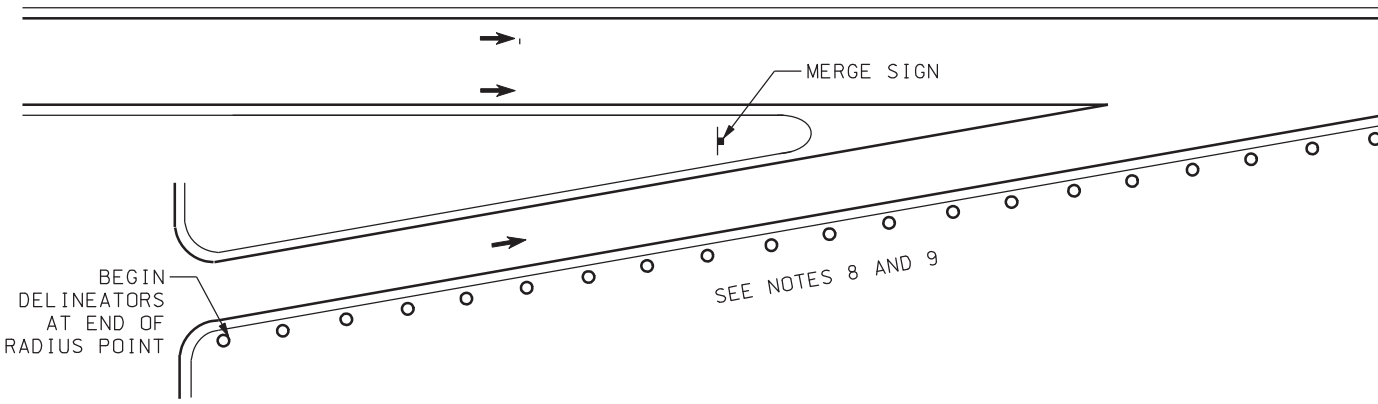


## EXIT RAMP

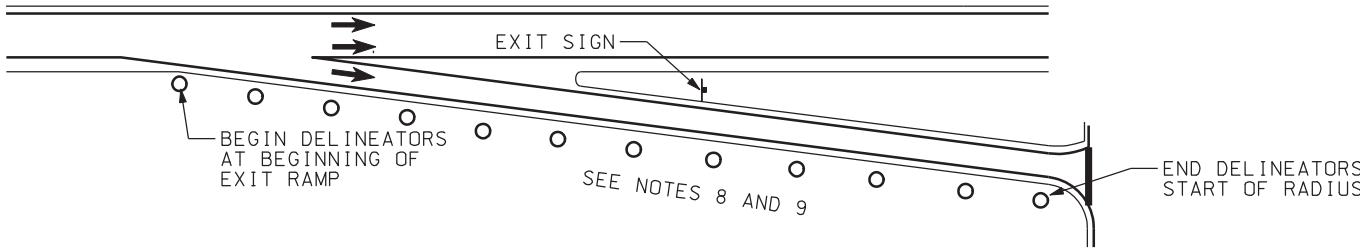


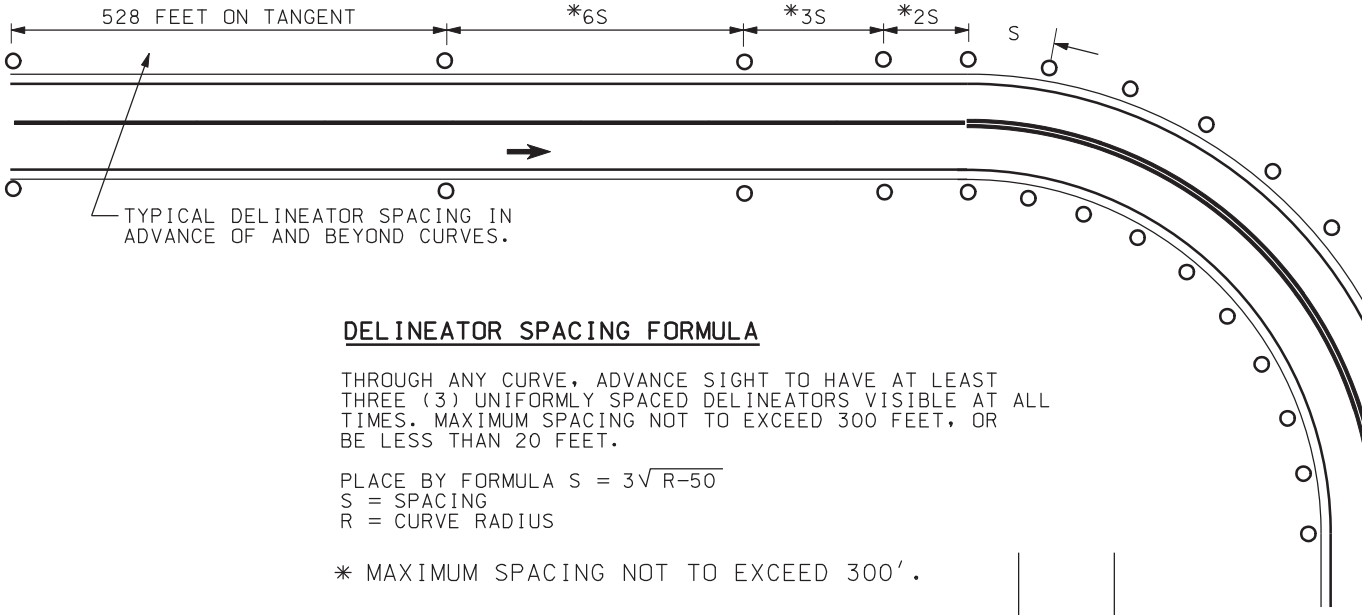


### DELINEATOR SPACING FORMULA

THROUGH ANY CURVE, ADVANCE SIGHT TO HAVE AT LEAST THREE (3) UNIFORMLY SPACED DELINEATORS VISIBLE AT ALL TIMES. MAXIMUM SPACING NOT TO EXCEED 300 FEET, OR BE LESS THAN 20 FEET.

PLACE BY FORMULA $S = 3\sqrt{R-50}$
S = SPACING
R = CURVE RADIUS

* MAXIMUM SPACING NOT TO EXCEED 300'.

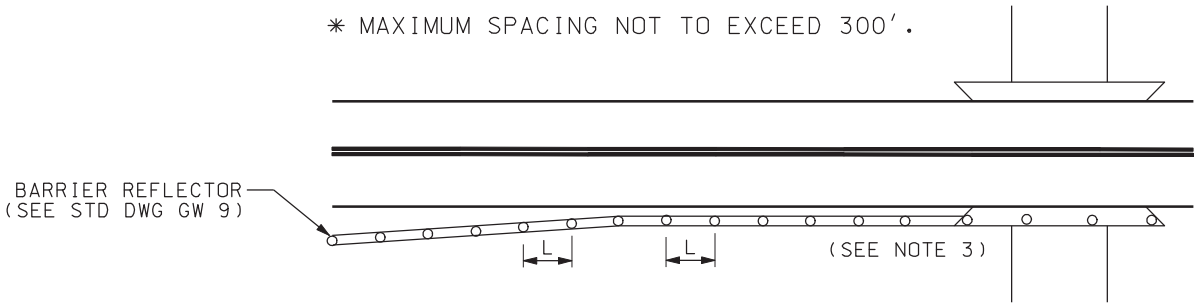


## BARRIER REFLECTOR DETAIL

(SEE NOTE 2)

DGN File:N:\Esd\Standard.Drawings\Imperial\2005Approved\General Road Work (GW)\gw10.dgn
25-JAN-2005

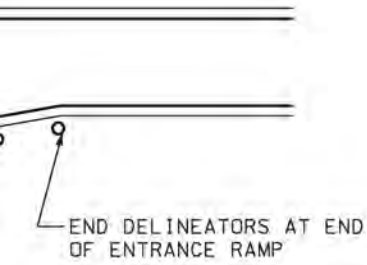


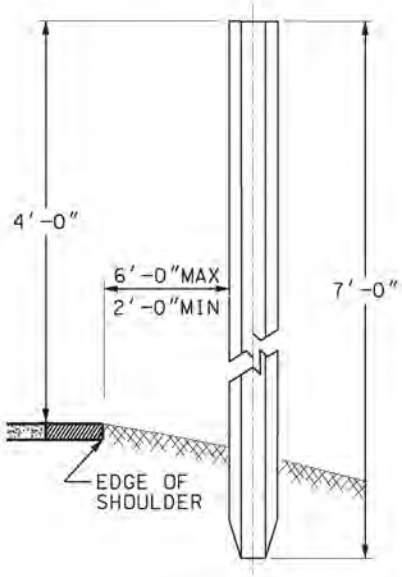


DELINEATOR

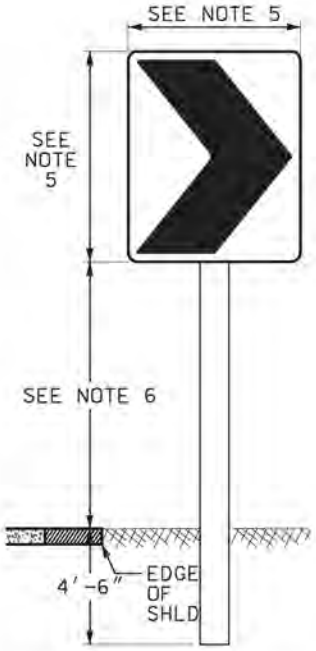


CHEVRON ALIGNMENT SIGN

AT
POINT

## NOTES:

1. BARRIERS ARE DEFINED AS BEING GUARDRAIL, CONCRETE BARRIER & BRIDGE PARAPET WALL.

2. MOUNT BARRIER REFLECTORS ON ENTIRE LENGTH OF BARRIER AS PER BARRIER TYPE STANDARD.

   USE REFLECTOR SPACING (L) OF 100 FEET IN PERMANENT LOCATIONS, AND 50 FEET FOR TEMPORARY SITUATIONS.

   USE REFLECTOR COLOR TO MATCH THE ADJACENT PAINT STRIPE.

3. IF GUARDRAIL IS NOT ATTACHED TO PARRAPET, INSTALL APPROPRIATE OBJECT MARKER OM-3R (OR L OR C) IN PLACE OF DELINEATOR AT LEADING EDGE OF BRIDGE PARAPET.

4. CHEVRON ALIGNMENT (W1-8) SIGNS MAY BE USED WHEN ADDITIONAL EMPHASIS AND GUIDANCE FOR A CHANGE IN HORIZONTAL ALIGNMENT IS NEEDED. THE W1-8 SIGN MAY BE USED TO SUPPLEMENT STANDARD DELINEATORS ON CURVES. THE W1-8 SIGN MAY BE USED TO SUPPLEMENT OR AS AN ALTERNATE TO THE LARGE ARROW (W1-6) SIGN.

   WHEN USED, INSTALL THE W1-8 SIGNS ON THE OUTSIDE OF A TURN OR CURVE, IN LINE WITH, AND AT APPROXIMATELY A RIGHT ANGLE TO APPROACHING TRAFFIC.

   THE W1-8 SIGN SHOULD BE VISIBLE FOR A SUFFICIENT DISTANCE TO PROVIDE THE ROAD USER WITH ADEQUATE TIME TO REACT TO THE CHANGE IN ALIGNMENT. SPACE THE SIGNS SUCH THAT THE ROAD USER ALWAYS HAS AT LEAST TWO SIGNS IN THEIR VIEW UNTIL THE CHANGE OF ALIGNMENT ELIMINATES THE NEED FOR A SIGN.

5. USE W1-8 SIGN SIZE AS FOLLOWS:

   a) FOR CONVENTIONAL ROADS USE 24" X 30".
   b) FOR EXPRESSWAYS USE 30"X 36".
   c) FOR FREEWAYS USE 36" X 48".

6. USE 7' MIN, 7'6" MAX MOUNTING HEIGHT ON INTERSTATE, EXPRESSWAY, AND URBAN AREAS. USE 5' MIN, 7'6" MAX IN RURAL AREAS.

7. USE CONSISTENT MOUNTING HEIGHT AT EACH LOCATION.

8. USE TYPE II DELINEATORS AT 300 FEET SPACING ON TANGENTS ALONG ALL ENTRANCE AND EXIT RAMPS AS SHOWN. USE DELINEATOR SPACING FORMULA FOR ALL RAMP CURVES. RAMP DELINEATORS ARE NOT REQUIRED WHERE CONTINUOUS LIGHTING IS IN OPERATION.

9. USE DELINEATORS ON THE LEFT SIDE OF ENTRANCE AND EXIT RAMPS FOR RIGHT HAND CURVES UPON APPROVAL OF THE REGION TRAFFIC ENGINEER.

REVISIONS

| NO. | DATE | APPR. | REMARKS |
|---|---|---|---|
| | | | |

PORTATION
: CONSTRUCTION

RECOMME: JAN.01.2005 DATE
CHAIRMA APPROVE: JAN.01.2005 DATE
DEPUTY DIRECTOR

STANDARD DRAWING TITLE
DELINEATION APPLICATION

STD DWG
GW 10

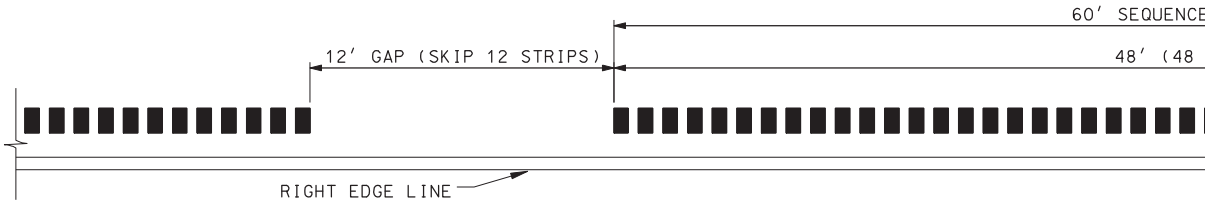


TYPICAL GAP

| TABLE 1<br>LONGITUDINAL RUMBLE STRIP APPLICATION | | | |
|---|---|---|---|
| ROADWAY TYPE | RIGHT SHOULDER WIDTH (RSW) | GROOVE WIDTH (BOTH SHOULDERS) | LOCATION OF RIGHT SHOULDER STRIP |
| UNDIVIDED | < 4′ | 6″ | EDGE LINE |
| UNDIVIDED | ≥ 4′ | 8″ | 12″ OFFSET FROM EDGE LINE |
| DIVIDED | < 6′ | 8″ | EDGE LINE OR 4″ OFFSET |
| DIVIDED | ≥ 6′ | 12″ | 12″ OFFSET FROM EDGE LINE |

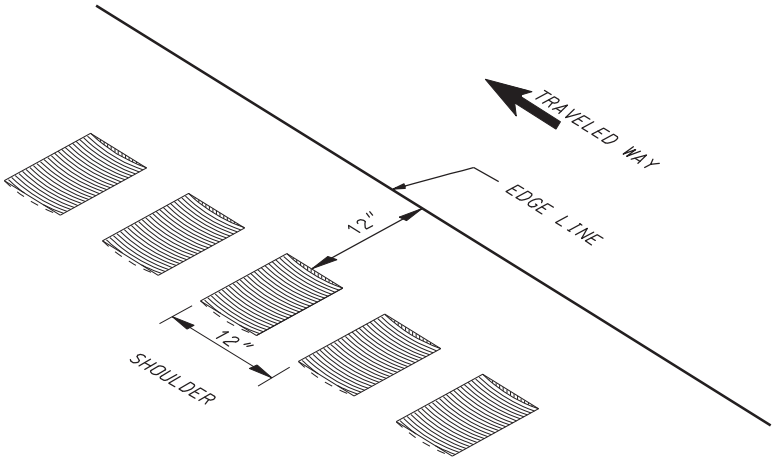


TYPICAL SHOULDER INSTALLATION
LEFT SHOULDER DETAIL

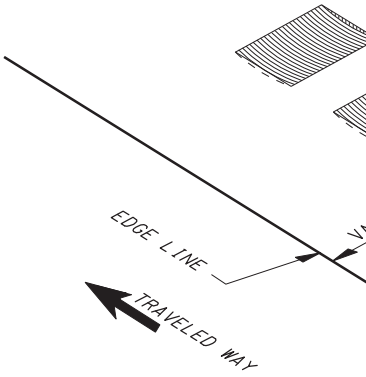


TYPICAL SHO
RIGHT SH

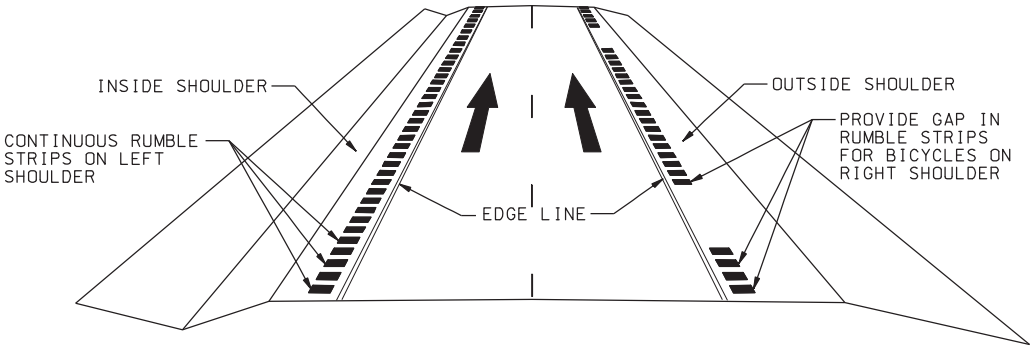


PERSPECTIVE VIEW (MULTI-LANE ROADWAY)

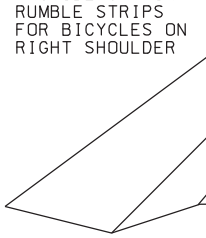


DGN File:N:\Esd\Standard.Drawings\Imperial\2005Approved\Paving (PV)\pv06.dgn
25-JAN-2005

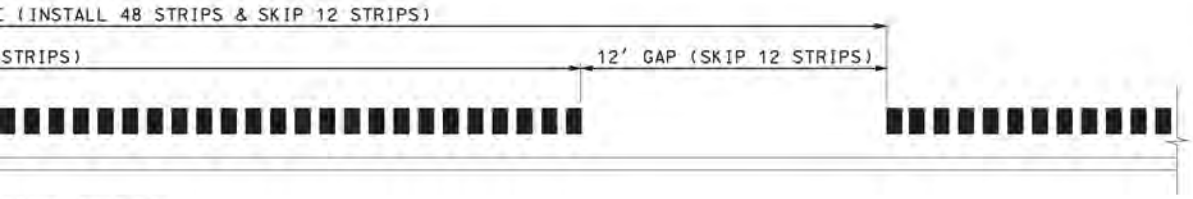


PING DETAIL

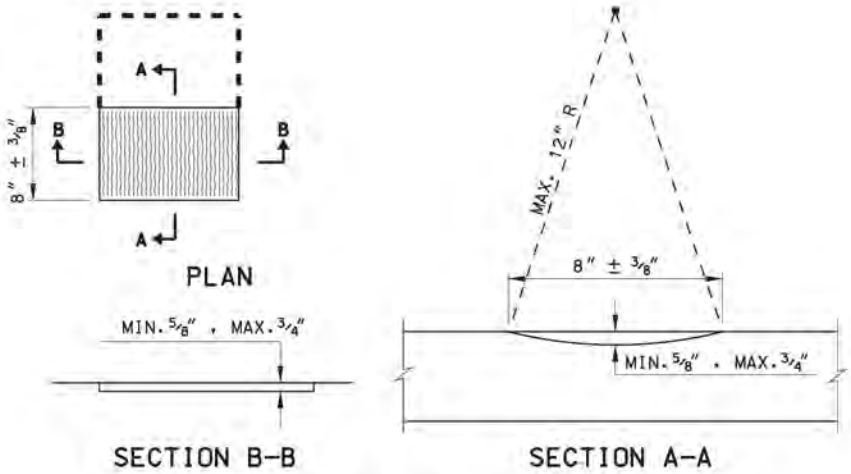


RUMBLE STRIP DETAILS

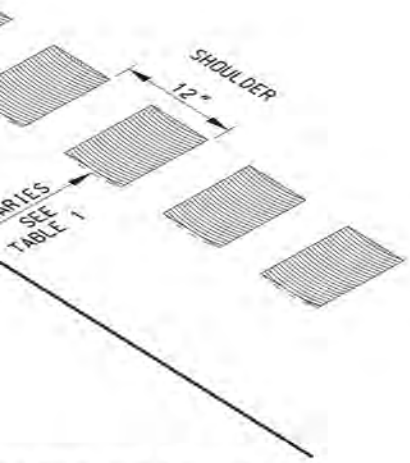


OULDER INSTALLATION
HOULDER DETAIL

## NOTES:

1. MILL RUMBLE STRIPS TO LEAVE A RECTANGULAR SHAPE WITH UNIFORM EDGES. DO NOT DAMAGE ADJACENT PAVEMENT DURING MILLING OPERATION.
2. DO NOT PLACE RUMBLE STRIPS ON STUCTURES OR APPROACH SLABS.
3. RESTART RUMBLE STRIP SEQUENCE (48 STRIPS, SKIP 12 STRIPS) WHEN RUMBLE STRIPS ARE HALTED OR INTERRUPTED.

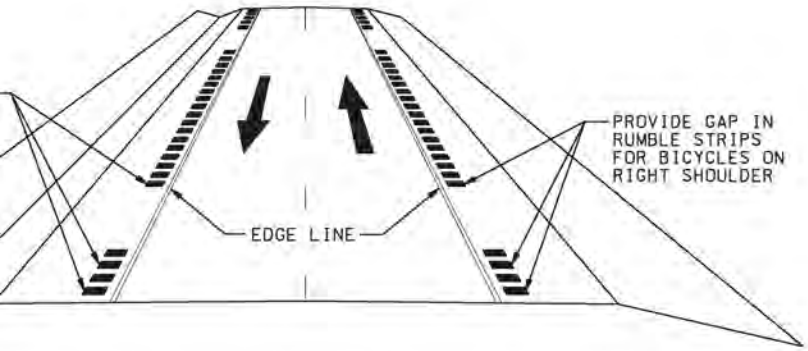


PERSPECTIVE VIEW (TWO-LANE ROADWAY)

REVISIONS

| NO. | DATE | APPR. | REMARKS |
|---|---|---|---|
| | | | |

RTATION
CONSTRUCTION

RECOMME JAN.01.2005 DATE
CHAIRMA APPROVE JAN.01.2005 DATE
DEPUTY DIRECTOR

RUMBLE STRIPS

STANDARD DRAWING TITLE

STD DWG
PV 6

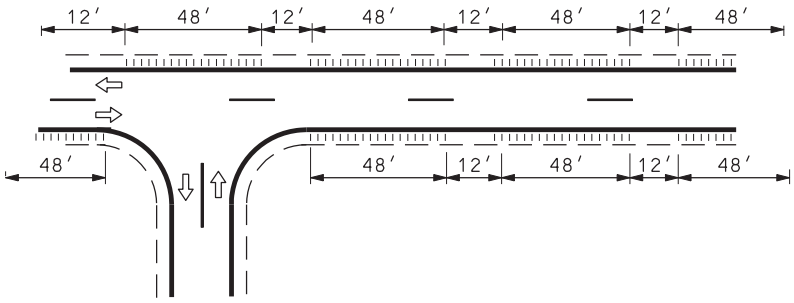


INSTALLATION ON
HIGHWAYS WITH NO ACCESS CONTROL
(SEE NOTE 4)

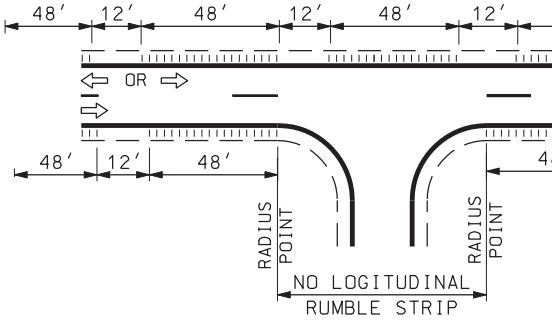


TYPICAL HEAVY USE DRIV
OR CROSSROAD EXCEPTION

USE CONTINUOUS RUMBLE STI
LEFT SHOULDER IN ONE WAY
SITUATIONS.

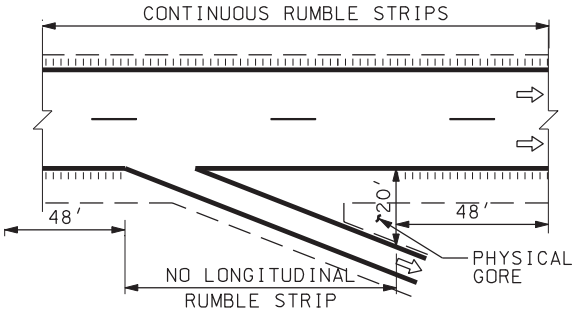


RAMP EXCEPTION DETAIL
ENTRANCE RAMP SIMILAR

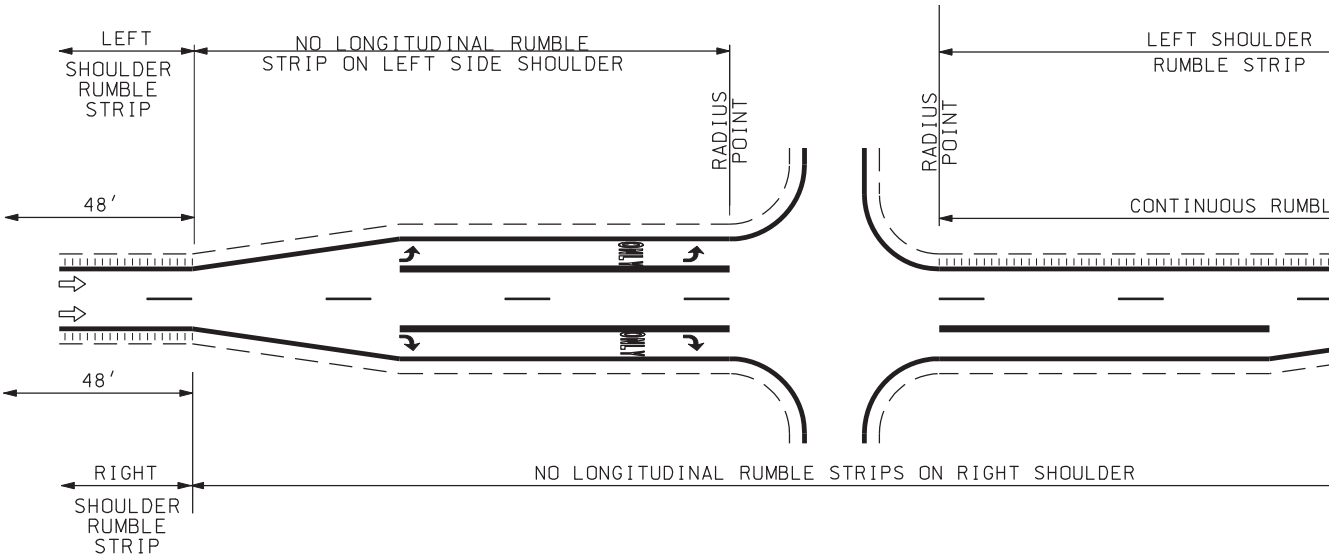


TYPICAL INTERSECTION, TURN LANE &
ACCELERATION LANE EXCEPTION DETAIL

DGN File:N:\Esd\Standard_Drawings\Imperial\2005Approved\Paving (PV)\pv07.dgn
25-JAN-2005

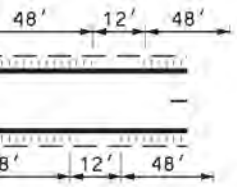


VEWAY
DETAIL

RIP ON
TRAFFIC



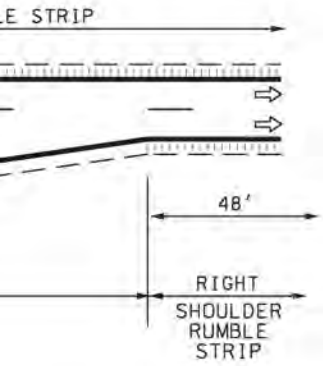


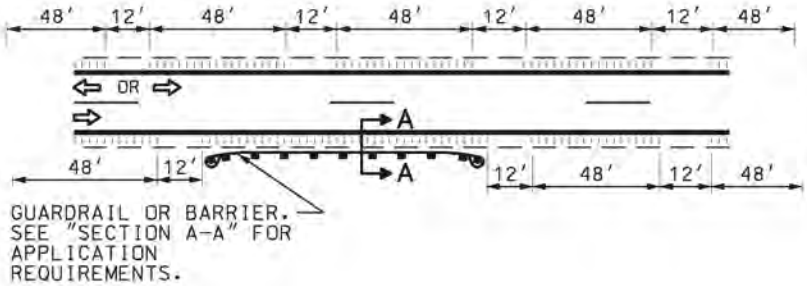


## TYPICAL GUARDRAIL AND/OR BARRIER

USE CONTINUOUS RUMBLE STRIP ON LEFT SHOULDER IN ONE WAY TRAFFIC SITUATIONS.

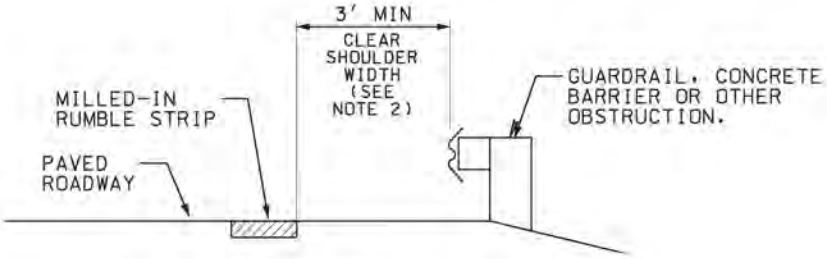


## SECTION A-A
## ROADSIDE BARRIER EXCEPTION

SEE NOTE 3

## NOTES:

1. OMIT RUMBLE STRIPS ACROSS PRINCIPAL INTERSECTING ROADWAYS AS PER DETAILS.
2. IF BICYCLE TRAFFIC EXISTS OR IS ANTICIPATED THEN PROVIDE A MINIMUM EFFECTIVE CLEAR SHOULDER WIDTH OF 3 FEET. APPLY THIS REQUIREMENT TO BOTH SHOULDERS OF UNDIVIDED HIGHWAYS AND THE RIGHT SHOULDER ONLY ON DIVIDED HIGHWAYS.
3. MAINTAIN 3 FEET MINIMUM CLEAR SHOULDER WIDTH BETWEEN OBSTRUCTION AND INSIDE EDGE OF RUMBLE STRIP. OTHERWISE ELIMINATE RUMBLE STRIP.
4. ON HIGHWAY WITH NO ACCESS CONTROL PLACE RUMBLE STRIP AS PER STD DWG PV 6.

REVISIONS

| NO. | DATE | APPR. | REMARKS |
|---|---|---|---|
| | | | |

ORTATION
: CONSTRUCTION

S

RECOMME — JAN.01,2005 DATE

CHAIRMA APPROVE — JAN.01,2005 DATE

DEPUTY DIRECTOR

RUMBLE STRIPS -
TYPICAL APPLICATION

STANDARD DRAWING TITLE

STD DWG

PV 7

# REGULATORY, WARNING, ROUTE MARKERS

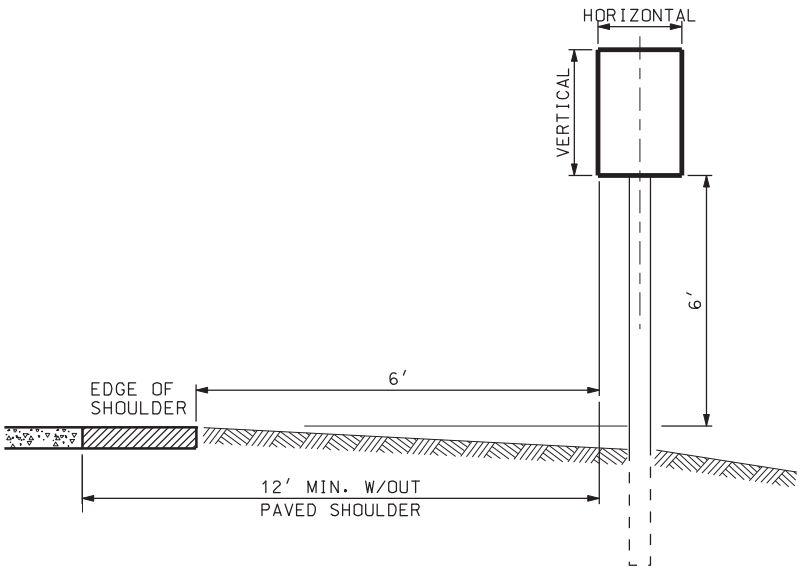


RURAL

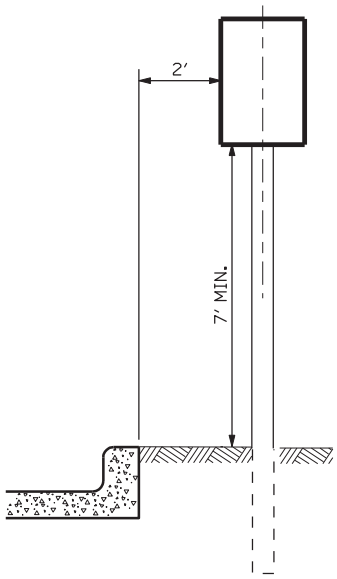


RESIDENTIAL – URBAN

SIGN INSTALLATION

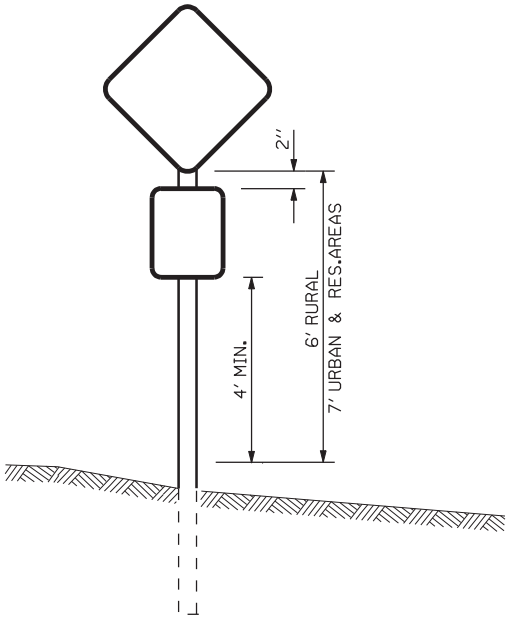


W/SUPPLEMENTAL SIGN

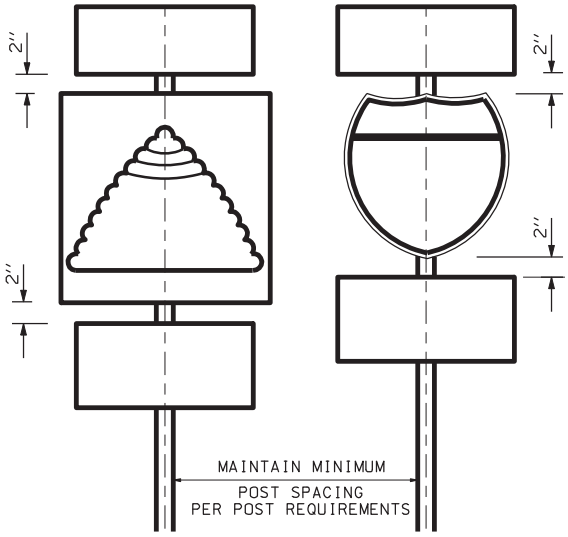


ROUTE MARKERS

DGN File:N:\Esd\Standard.Drawings\Imperial\2005Approved\Signs (SN)\sn07.dgn
25-JAN-2005

# GUIDE & DIRECTIONAL SIGNING

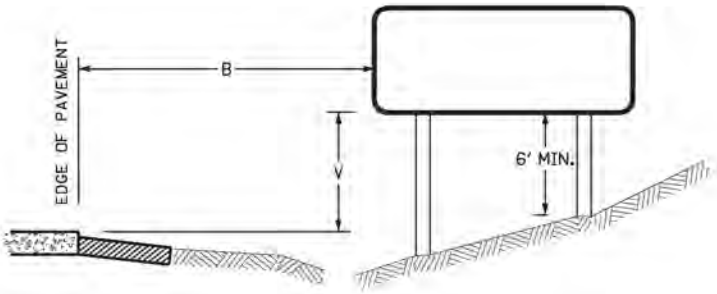


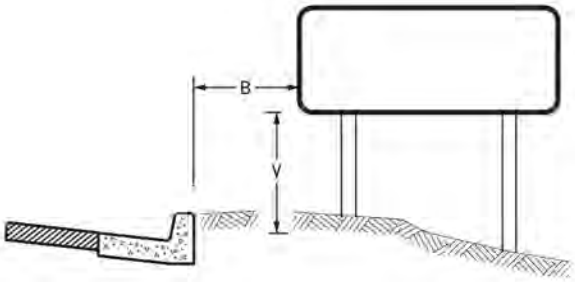


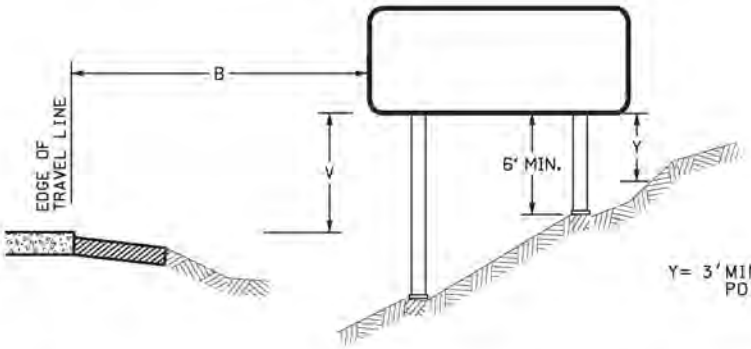


Y= 3'MIN. GROUND TO ANY POINT OF SIGN PANEL.

## GUIDE & DIRECTIONAL SIGN PLACEMENT

| (B) LATERAL PLACEMENT | | | (V) VERTICAL PLACEMENT | | |
|---|---|---|---|---|---|
| CONVENTIONAL | | INTERSTATE | INTERSTATE | CONVENTIONAL | |
| RURAL | URBAN | | | RURAL | URBAN |
| 6'- 12' FROM EDGE OF PAVEMENT OR SHOULDER | 2' MIN WITH CURB | DESIRABLE - 30' FROM TRAVEL LANE ACCEPTABLE- 12' MIN FROM EDGE OF SHOULDER | DESIRABLE - 7' ACCEPTABLE - 6' | 6' | 7' |
| | 2' MIN PLUS SHOULDER | | 7' | | |
| | WITHOUT CURB | 2' MIN WHEN BEHIND BARRIER | 7' | | |

REVISIONS

| NO. | DATE | APPR. | REMARKS |
|---|---|---|---|

RECOMMENDED: CONSTRUCTION

CHAIRMAN APPROVED: JAN.01,2005 DATE

DEPUTY DIRECTOR: JAN.01,2005 DATE

PLACEMENT OF GROUND MOUNT SIGNS

STANDARD DRAWING TITLE

STD DWG

SN 7

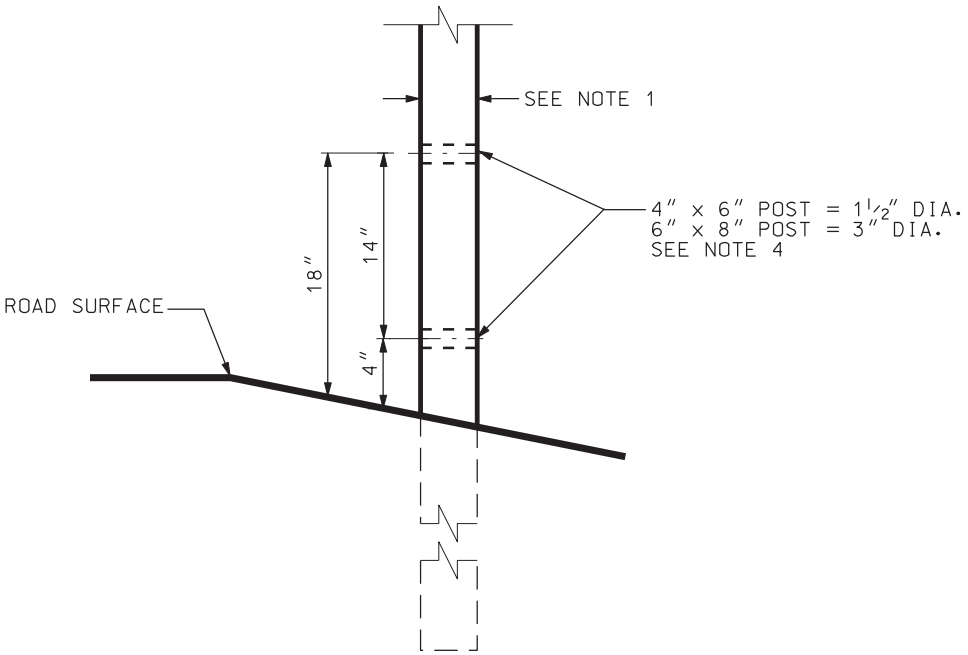


WEAKENED POST DETAIL
SEE NOTE 3

| VERTICAL SIGN DIMENSION ( inches ) | 1 |
|---|---|
| 12 | 1 – 4 |
| 18 | 1 – 4 |
| 24 | 1 – 4 |
| 30 | 1 – 4 |
| 36 | 1 – 4 |
| 42 | 1 – 4 |
| 48 | 1 – 4 |
| 54 | 1 – 4 |
| 60 | 1– 4 4 |
| 66 | 1– 4 4 |
| 72 | 1– 4 4 |

LEGEN

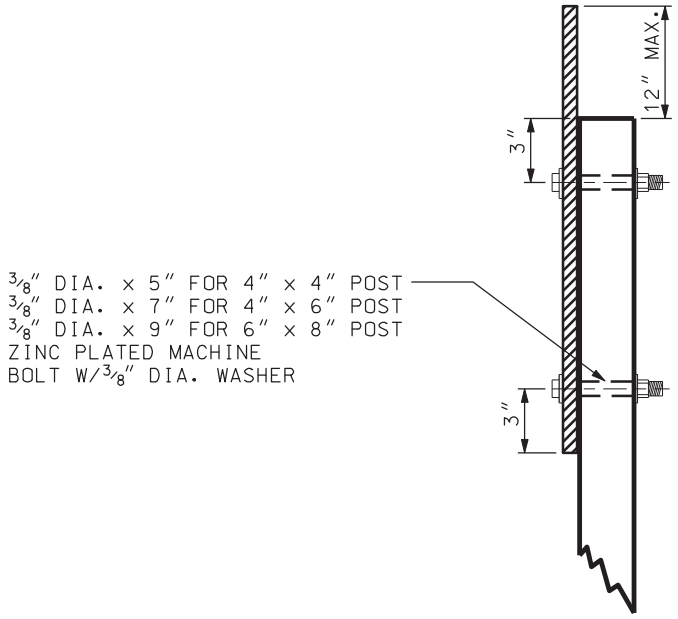


SIDE VIEW

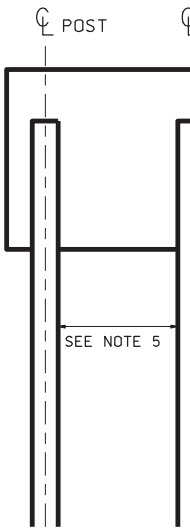


MULTIPLE

DGN File:N:\Esd\Standard.Drawings\Imperial\2005Approved\Signs (SN)\sn08.dgn
25-JAN-2005

## TIMBER SIGN POSTS (Nominal)

| HORIZONTAL SIGN DIMENSION ( inches ) | | | | | | | | | | | |
|---|---|---|---|---|---|---|---|---|---|---|---|
| 2 | 24 | 36 | 48 | 60 | 72 | 84 | 96 | 108 | 120 | 132 | 144 |
| 4x4 | 1 - 4x4<br>4 | 1 - 4x4<br>4 | 1 - 4x4<br>4 | 2 - 4x4<br>4 | 2 - 4x4<br>4 | 2 - 4x4<br>4 | 2 - 4x4<br>4 | 2 - 4x4<br>4 | 2 - 4x4<br>4 | 2 - 4x4<br>4 | 2 - 4x4<br>4 |
| 4x4 | 1 - 4x4<br>4 | 1 - 4x4<br>4 | 1- 4x6<br>4 | 2 - 4x4<br>4 | 2 - 4x4<br>4 | 2 - 4x4<br>4 | 2 - 4x6<br>4 | 2 - 4x6<br>4 | 2 - 4x6<br>4 | 2 - 4x6<br>4 | 2 - 4x6<br>4 |
| 4x4 | 1 - 4x4<br>4 | 1- 4x6<br>4 | 1- 4x6<br>4 | 2 - 4x4<br>4 | 2 - 4x6<br>4 | 2 - 4x6<br>4 | 2 - 4x6<br>4 | 2 - 4x6<br>4 | 2 - 4x6<br>4 | 2 - 4x6<br>4 | 2 - 4x6<br>4 |
| 4x4 | 1 - 4x4<br>4 | 1- 4x6<br>4 | 1- 4x6<br>4 | 2 - 4x6<br>4 | 2 - 4x6<br>4 | 2 - 4x6<br>4 | 2 - 4x6<br>4 | 2 - 4x6<br>4 | 2 - 4x6<br>4 | 3 - 4x6<br>4 | 3 - 4x6<br>4 |
| 4x4 | 1- 4x6<br>4 | 1- 4x6<br>4 | 1- 4x6<br>4 | 2 - 4x6<br>4 | 2 - 4x6<br>4 | 2 - 4x6<br>4 | 2 - 4x6<br>4 | 3 - 4x6<br>4 | 3 - 4x6<br>4 | 3 - 4x6<br>4 | 3 - 4x6<br>4 |
| 4x4 | 1- 4x6<br>4 | 1- 4x6<br>4 | 1- 4x6<br>4 | 2 - 4x6<br>4 | 2 - 4x6<br>4 | 2 - 4x6<br>4 | 3 - 4x6<br>4 | 3 - 4x6<br>4 | 3 - 4x6<br>4 | 2 - 6x8<br>5 | 2 - 6x8<br>5 |
| 4x4 | 1- 4x6<br>4 | 1- 4x6<br>4 | 2 - 4x6<br>4 | 2 - 4x6<br>4 | 2 - 4x6<br>4 | | 3 - 4x6<br>4 | 3 - 4x6<br>4 | 2 - 6x8<br>4 | 2 - 6x8<br>5 | 2 - 6x8<br>5 |
| 4x4 | 1- 4x6<br>4 | 1- 6x8<br>5 | 2 - 4x6<br>4 | 2 - 4x6<br>4 | 1- 6x8<br>5 | | 2 - 6x8<br>5 | 2 - 6x8<br>5 | 2 - 6x8<br>5 | 2 - 6x8<br>5 | 2 - 6x8<br>5 |
| x6 | 1- 4x6<br>4 | 1- 6x8<br>5 | 2 - 4x6<br>4 | 1- 6x8<br>5 | 1- 6x8<br>5 | | 2 - 6x8<br>5 | 2 - 6x8<br>5 | 2 - 6x8<br>5 | 2 - 6x8<br>5 | 2 - 6x8<br>5 |
| x6 | 1- 4x6<br>4 | 1- 6x8<br>5 | 2 - 4x6<br>4 | 1- 6x8<br>5 | | | 2 - 6x8<br>5 | 2 - 6x8<br>5 | 2 - 6x8<br>5 | 2 - 6x8<br>5 | |
| x6 | 1- 6x8<br>5 | 1- 6x8<br>5 | 1- 6x8<br>5 | 1- 6x8<br>5 | | | 2 - 6x8<br>5 | 2 - 6x8<br>5 | 2 - 6x8<br>5 | | |

D 2 - 4x6 — NUMBER & SIZE ( inch x inch ) OF POSTS
5 — EMBEDMENT DEPTH IN FEET

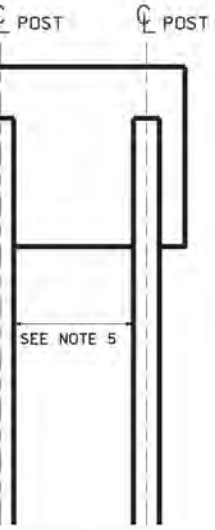


POST SIGN

### NOTES:

1. NARROW POST DIMENSION TO FACE TRAFFIC.
2. USE ONE 4"x 6" POST FOR MULTIPLE SIGN INSTALLATION ON SINGLE POST. EXCLUDING ROUTE MARKERS.
3. MINIMUM DEPTH OF EMBEDMENT: 4' UNLESS 5' IS SHOWN.
4. FIELD DRILL TWO HOLES IN THE CENTER OF THE POST. DRILL PERPENDICULAR TO THE CENTER LINE OF THE ROAD.
5. MINIMUM SPACING BETWEEN POST:

| | POST SIZE | SPACING |
|---|---|---|
| FOR 3 OR MORE POSTS | 4" x 4" | = 4' |
| FOR 3 OR MORE POSTS | 4" x 6" | = 4' |
| FOR 2 OR MORE POSTS | 6" x 8" | = 7' |

REVISIONS

| NO. | DATE | APPR. | REMARKS |
|---|---|---|---|
| | | | |

JRTATION
: CONSTRUCTION

S

RECOMME — JAN.01,2005 DATE

CHAIRMA APPROVE

DEPUTY DIRECTOR — JAN.01,2005 DATE

STANDARD DRAWING TITLE

GROUND MOUNTED
TIMBER SIGN POST (P1)

STD DWG
SN 8

# TUBULAR STEEL POSTS (P4)
## (WITH SLIPBASE)
## (SINGLE OR DOUBLE POST)

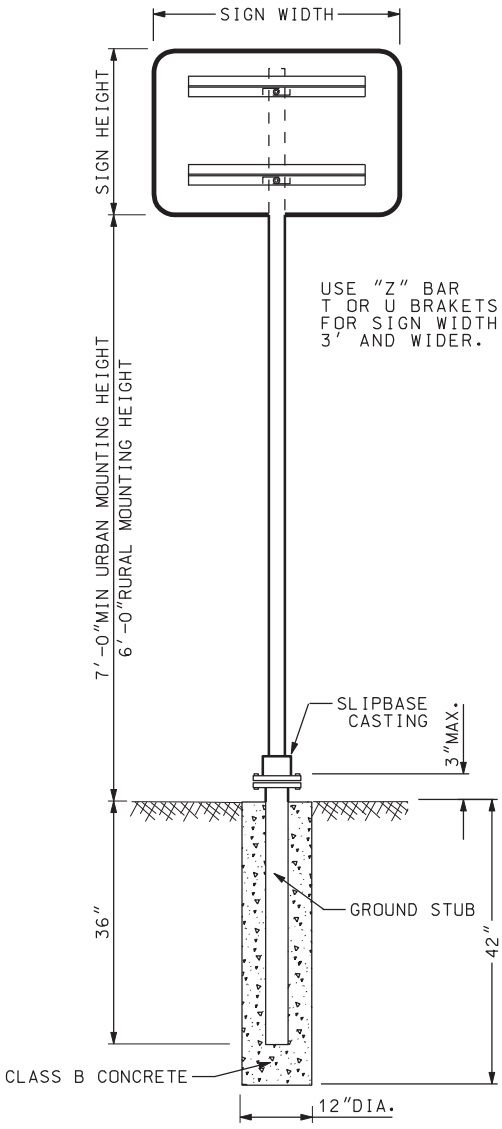


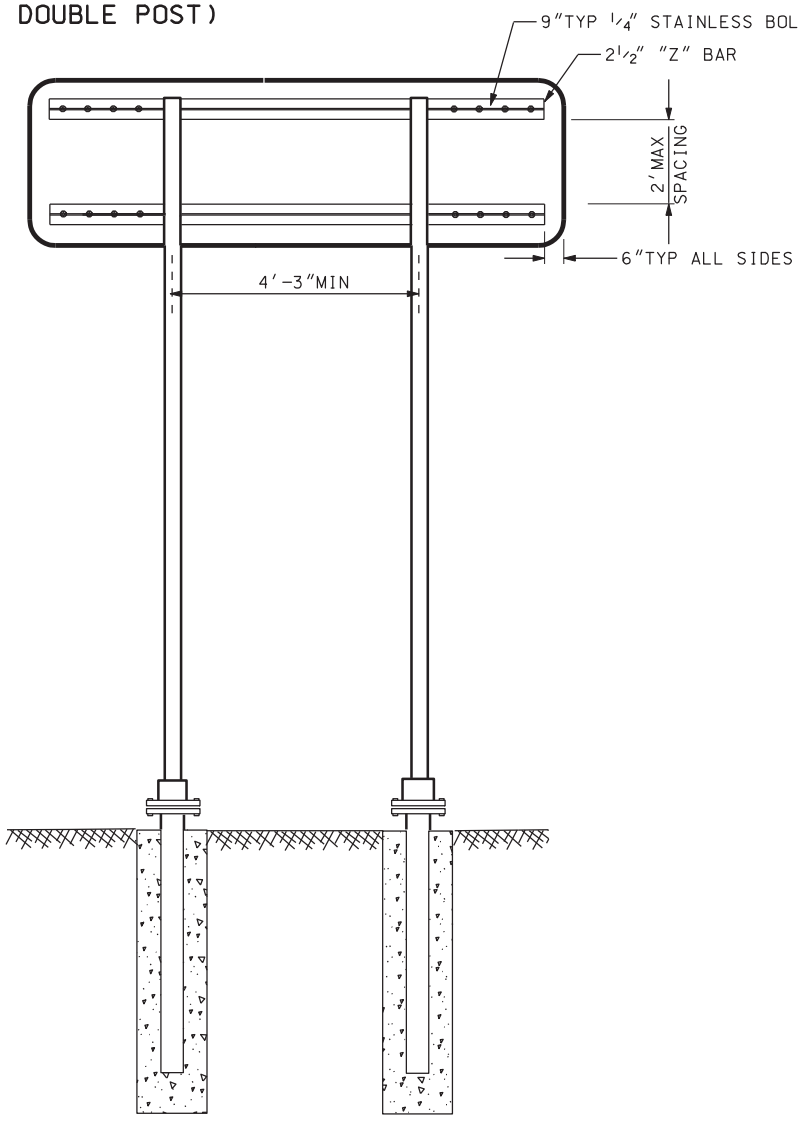


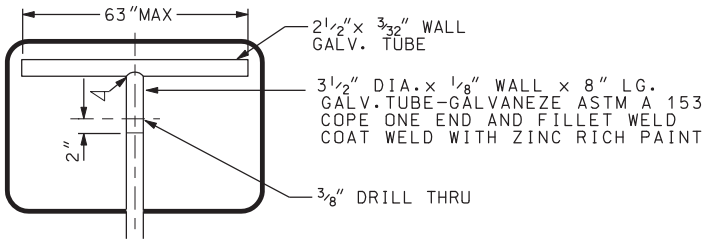


T BRACKET

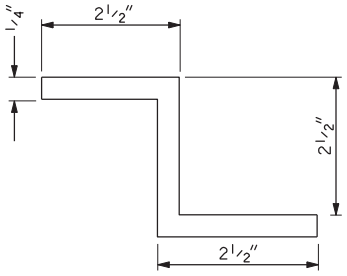


"Z" BAR - ASTM B 221-6061T6

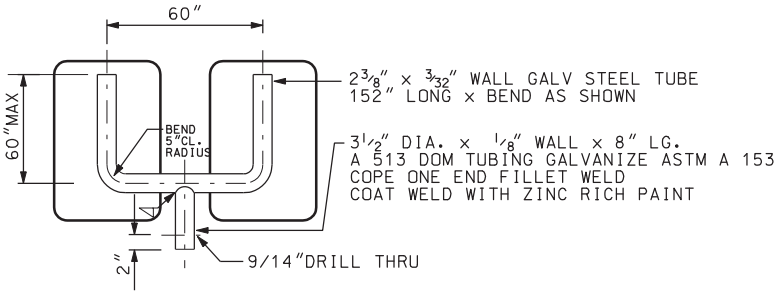


U BRACKET

EXTEND T AND U BRACKETS
TO 2" SHORT OF THE EDGE
OF THE PANEL.

DGN File:N:\Esd\Standard.Drawings\Imperial\2005Approved\Signs (SN)\sn11.dgn
25-JAN-2005

| STANDARD PIPE SIZE | A | B | C | D | E | F | G | K | L | R1 | R2 |
|---|---|---|---|---|---|---|---|---|---|---|---|
| 2 | 3 3/4 | 2 3/4 | 1 1/2 | 1 1/8 | 1/2 | 3/16 | 1 | 2 11/16 | 1 7/32 | 1 1/4 | 1 3/16 |
| 2 1/2 | 4 1/4 | 3 1/4 | 2 | 1 1/4 | 1/2 | 1/4 | 1 | 3 3/16 | 1 15/32 | 1 1/2 | 1 7/16 |

DIMENSIONS FOR MOUNTING CLAMP

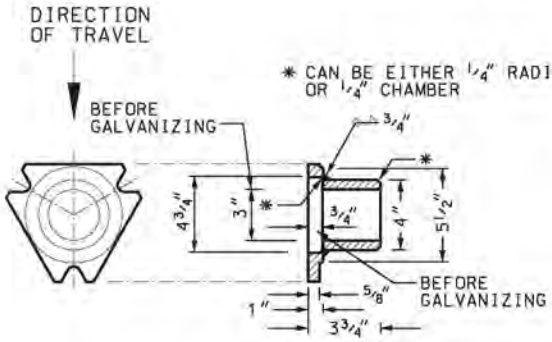


SLIPBASE CASTING

## U-BOLT

U-BOLT TO BE MADE IN ACCORDANCE WITH STANDARD MANUFACTURING PROCEDURE. 9/32" OR 5/16" DIAMETER STOCK IS PERMISSIBLE. AMERICAN STANDARD REGULAR SEMI-FINISHED HEX NUTS AND LOCKWASHERS.

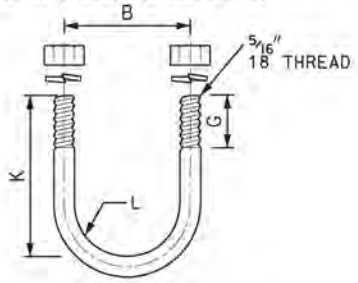


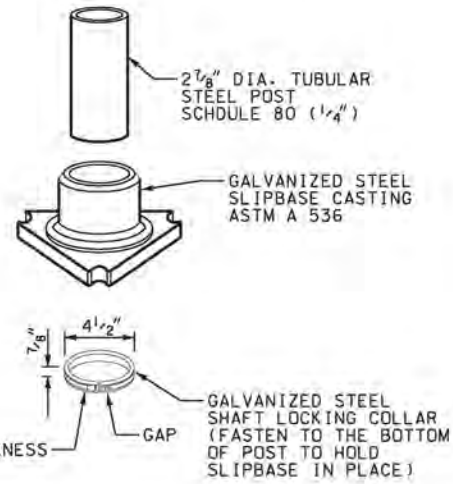


## PIPE CLAMP CASTING

PIPE CLAMP CASTING: ASTM B26 OR B108 ALUMINUM ALLOY A444.00-T4 OR 356.0-F. SIGN MOUNTING CLAMP PARTS NOT MADE FROM ALUMINUM: GALVANIZED IN CONFORMANCE WITH ASTM A 153 OR STAINLESS STEEL.

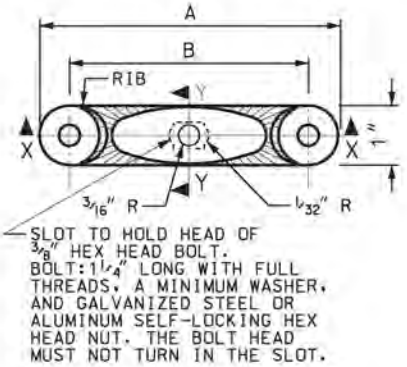


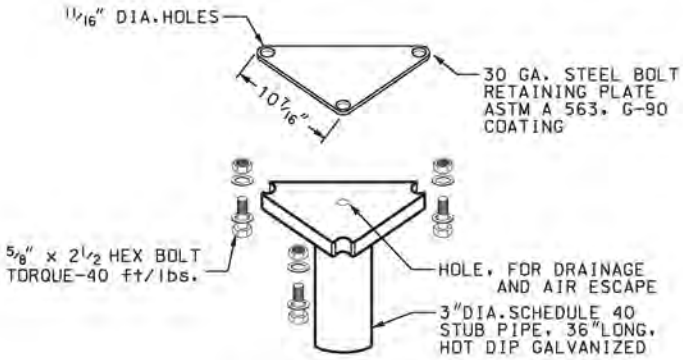


TYPICAL ASSEMBLY

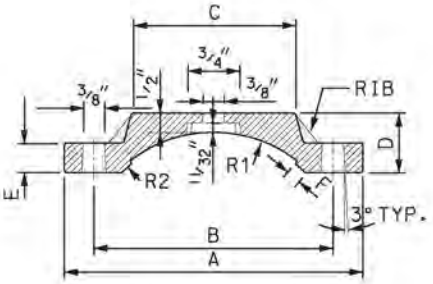


SECTION X-X

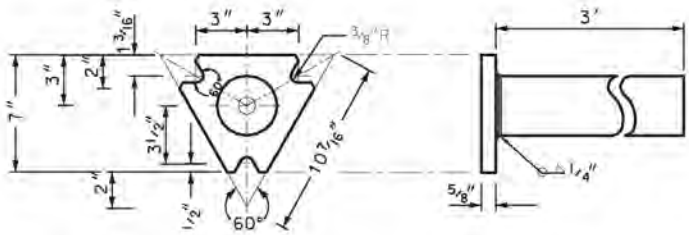


SLIPBASE STUB POST

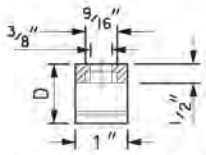


SECTION Y-Y

MOUNTING CLAMP FOR SOCKET OR SLIPBASE

REVISIONS

| NO. | DATE | APPR. | REMARKS |
|---|---|---|---|

PORTATION
: CONSTRUCTION

RECOMME: JAN.01.2005 DATE
CHAIRMA APPROVE: JAN.01.2005 DATE
DEPUTY DIRECTOR

SLIPBASE GROUND MOUNTED TUBULAR STEEL SIGN POST (P4)

STANDARD DRAWING TITLE

STD DWG
SN 11

| VERTICAL SIGN DIMENSION ( V ) | HORIZONTAL SIGN | | | | | | | | | | | | | |
|---|---|---|---|---|---|---|---|---|---|---|---|---|---|---|
| | ONE POST PER SIGN | | | | | TWO POSTS PER SIGN | | | | | | | | |
| | 1′-0″ | 2′-0″ | 3′-0″ | 4′-0″ | 5′-0″ | 6′-0″ | 7′-0″ | 8′-0″ | 9′-0″ | 10′-0″ | 11′-0″ | 12′-0″ | 13′-0″ | 14′- |
| 1′-0″ | 3″Ø 3′-0″ | 3″Ø 3′-0″ | 3″Ø 3′-0″ | 3″Ø 3′-0″ | 3″Ø 3′-0″ | S3X5.7 3′-0″ | S3X5.7 3′-0″ | S3X5.7 3′-0″ | S3X5.7 3′-0″ | S3X5.7 3′-0″ | S3X5.7 3′-0″ | S3X5.7 3′-0″ | S3X5.7 3′-0″ | S3X5 3′- |
| 1′-6″ | 3″Ø 3′-0″ | 3″Ø 3′-0″ | 3″Ø 3′-0″ | 3″Ø 3′-0″ | 3″Ø 3′-0″ | S3X5.7 3′-0″ | S3X5.7 3′-0″ | S3X5.7 3′-0″ | S3X5.7 3′-0″ | S3X5.7 3′-0″ | S3X5.7 3′-0″ | S3X5.7 3′-0″ | S3X5.7 3′-0″ | S3X5 3′- |
| 2′-0″ | 3″Ø 3′-0″ | 3″Ø 3′-0″ | 3″Ø 3′-0″ | 3″Ø 3′-0″ | 3″Ø 3′-0″ | S3X5.7 3′-0″ | S3X5.7 3′-0″ | S3X5.7 3′-0″ | S3X5.7 3′-0″ | S3X5.7 3′-0″ | S4X9.5 3′-0″ | S4X9.5 3′-0″ | S4X9.5 3′-0″ | S4X9 3′- |
| 2′-6″ | 3″Ø/ 3′-0″ | 3″Ø 3′-0″ | 3″Ø 3′-0″ | 3″Ø 3′-0″ | 3″Ø 3′-0″ | S3X5.7 3′-0″ | S3X5.7 3′-0″ | S3X5.7 3′-0″ | S4X9.5 3′-0″ | S4X9.5 3′-0″ | S4X9.5 3′-0″ | S4X9.5 3′-0″ | S4X9.5 3′-0″ | S4X9 3′- |
| 3′-0″ | 3″Ø 3′-0″ | 3″Ø 3′-0″ | 3″Ø 3′-0″ | 3″Ø 3′-0″ | 4″Ø 3′-0″ | S3X5.7 3′-0″ | S3X5.7 3′-0″ | S4X9.5 3′-0″ | S4X9.5 3′-0″ | S4X9.5 3′-0″ | S4X9.5 3′-0″ | S4X9.5 3′-0″ | S4X9.5 3′-0″ | S6X1 3′- |
| 4′-0″ | 3″Ø 3′-0″ | 3″Ø 3′-0″ | 3″Ø 3′-6″ | 4″Ø 3′-6″ | 4″Ø 3′-6″ | S4X9.5 3′-6″ | S4X9.5 3′-6″ | S4X9.5 3′-6″ | S4X9.5 4′-0″ | S4X9.5 3′-6″ | S6X12.5 3′-6″ | S6X12.5 3′-6″ | S6X12.5 3′-0″ | S6X1 3′- |
| 5′-0″ | 3″Ø 3′-0″ | 3″Ø 3′-0″ | 4″Ø 3′-6″ | 4″Ø 3′-6″ | 5″Ø 3′-6″ | S4X9.5 3′-6″ | S4X9.5 4′-0″ | S4X9.5 4′-0″ | S6X12.5 4′-6″ | S6X12.5 4′-0″ | S6X12.5 3′-0″ | S6X12.5 3′-6″ | S6X12.5 3′-6″ | S6X1 3′- |
| 6′-0″ | 3″Ø 3′-0″ | 4″Ø 3′-0″ | 4″Ø 3′-0″ | 5″Ø 3′-0″ | 5″Ø 3′-0″ | S4X9.5 4′-0″ | S6X12.5 4′-0″ | S6X12.5 4′-6″ | S6X12.5 3′-0″ | S6X12.5 3′-6″ | S6X12.5 3′-6″ | S6X12.5 4′-0″ | S6X12.5 4′-0″ | S6X1 4′- |
| 7′-0″ | 3″Ø 3′-0″ | 4″Ø 3′-0″ | 4″Ø 3′-0″ | 5″Ø 3′-0″ | 5″Ø 3′-6″ | S6X12.5 4′-0″ | S6X12.5 3′-0″ | S6X12.5 3′-6″ | S6X12.5 3′-6″ | S6X12.5 3′-6″ | S6X12.5 4′-0″ | S6X17.5 4′-0″ | S6X17.5 4′-6″ | S8X1 4′- |
| 8′-0″ | 3″Ø 3′-0″ | 4″Ø 3′-0″ | 5″Ø 3′-0″ | 5″Ø 3′-6″ | 6″Ø 4′-0″ | S6X12.5 3′-0″ | S6X12.5 3′-6″ | S6X12.5 3′-6″ | S6X12.5 4′-0″ | S6X12.5 4′-0″ | S6X17.5 4′-6″ | S8X18.4 4′-6″ | S8X18.4 4′-6″ | S8X1 5′- |
| 9′-0″ | 3″Ø 3′-0″ | 4″Ø 3′-0″ | 5″Ø 3′-6″ | 6″Ø 4′-0″ | 6″Ø 4′-0″ | S6X12.5 3′-6″ | S6X12.5 3′-6″ | S6X12.5 4′-0″ | S6X17.5 4′-0″ | S6X17.5 4′-6″ | S8X18.4 4′-6″ | S8X18.4 5′-0″ | S8X18.4 5′-0″ | S8X1 5′- |
| 10′-0″ | 3″Ø 3′-0″ | 5″Ø 3′-0″ | 5″Ø 3′-6″ | 6″Ø 4′-0″ | 6″Ø 4′-6″ | S6X12.5 3′-6″ | S6X12.5 4′-0″ | S6X17.5 4′-6″ | S6X17.5 4′-6″ | S8X18.4 5′-0″ | S8X18.4 5′-0″ | S8X18.4 5′-6″ | S8X18.4 5′-6″ | S8X18 6′-0 |
| 11′-0″ | 4″Ø 3′-0″ | 5″Ø 3′-0″ | 6″Ø 3′-6″ | 6″Ø 4′-6″ | 8″Ø 5′-0″ | S6X12.5 4′-0″ | S6X17.5 4′-6″ | S6X17.5 4′-6″ | S8X18.4 5′-0″ | S8X18.4 5′-0″ | S8X18.4 5′-6″ | S8X18.4 5′-6″ | W10X19.0 6′-0″ | W10X1 6′-0 |
| 12′-0″ | 4″Ø 3′-0″ | 5″Ø 3′-0″ | 6″Ø 4′-0″ | 6″Ø 4′-6″ | 8″Ø 5′-0″ | S6X12.5 4′-0″ | S6X17.5 4′-6″ | S6X18.4 4′-6″ | S8X18.4 5′-0″ | S8X18.4 5′-0″ | S8X18.4 5′-6″ | W10X19.0 6′-0″ | W10X19.0 6′-0″ | W10X1 6′-6 |
| 13′-0″ | 4″Ø 3′-0″ | 5″Ø 3′-6″ | 6″Ø 4′-0″ | 8″Ø 5′-0″ | 8″Ø 5′-6″ | S6X17.5 4′-0″ | S8X18.4 4′-6″ | S8X18.4 5′-0″ | S8X18.4 5′-0″ | S8X18.4 5′-6″ | W10X19.0 6′-0″ | W10X19.0 6′-0″ | W10X19.0 6′-6″ | W10X2 6′-6 |
| 14′-0″ | 4″Ø 3′-0″ | 5″Ø 3′-6″ | 6″Ø 4′-6″ | 8″Ø 5′-0″ | 8″Ø 5′-6″ | S6X17.5 4′-6″ | S8X18.4 5′-0″ | S8X18.4 5′-0″ | S8X18.4 5′-6″ | W10X19.0 6′-0″ | W10X19.0 6′-0″ | W10X19.0 6′-6″ | W10X22.0 6′-6″ | W10X2 7′-0 |
| 15′-0″ | 4″Ø 3′-0″ | 6″Ø 3′-6″ | 6″Ø 4′-6″ | 8″Ø 5′-6″ | 8″Ø 6′-0″ | S8X18.4 4′-6″ | S8X18.4 5′-0″ | S8X18.4 5′-6″ | S8X18.4 5′-6″ | W10X19.0 6′-0″ | W10X19.0 6′-6″ | W10X22.0 6′-6″ | W10X22.0 7′-0″ | W10X2 7′-6 |
| 16′-0″ | 4″Ø 3′-0″ | 6″Ø 4′-0″ | 8″Ø 4′-6″ | 8″Ø 5′-6″ | 8″Ø 6′-0″ | S8X18.4 5′-0″ | S8X18.4 5′-0″ | S8X18.4 5′-6″ | W10X19.0 6′-0″ | W10X19.0 6′-6″ | W10X22.0 6′-6″ | W10X22.0 7′-0″ | W10X26.0 7′-6″ | W10X3 7′-6 |

USE 10′ WIDTH IF SIZE FALLS IN THIS AREA

1 1/2 T

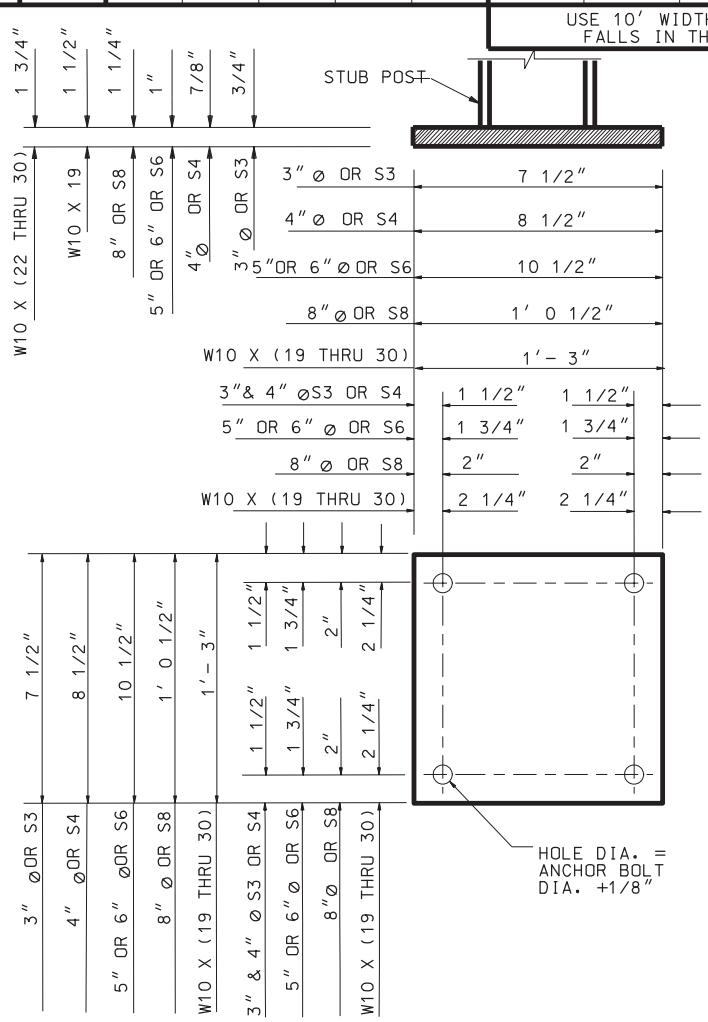


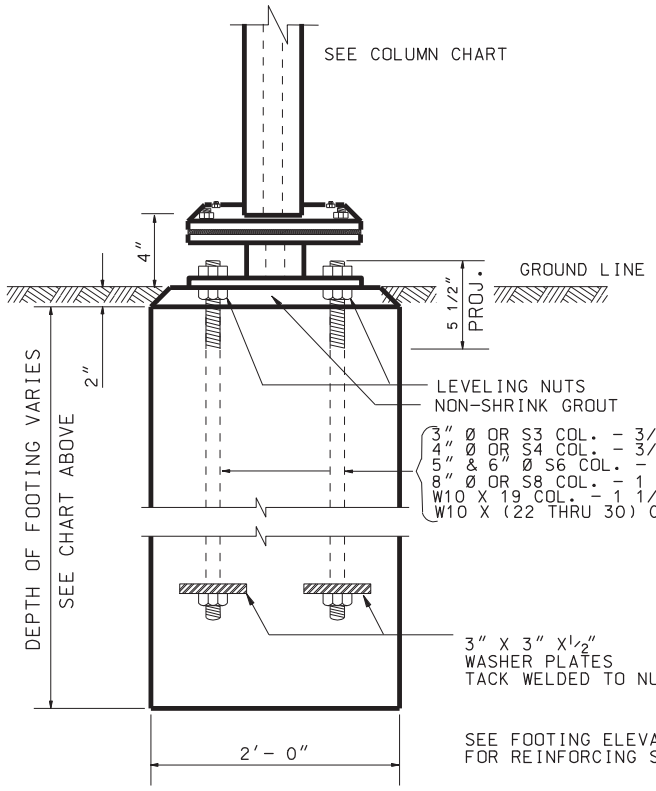


FOOTING DETAILS

DGN File:N:\Esd\Standard_Drawings\Imperial\2005Approved\Signs (SN)\sn12a.dgn

25-JAN-2005

| DIMENSION ( W ) | | | THREE POSTS PER SIGN | | | | | | | |
|---|---|---|---|---|---|---|---|---|---|---|
| 0" | 15'-0" | 16'-0" | 17'-0" | 18'-0" | 19'-0" | 20'-0" | 21'-0" | 22'-0" | 23'-0" | 24'-0" |
| .7 0" | S3X5.7 3'-0" | S3X5.7 3'-0" | S3X5.7 3'-0" | S3X5.7 3'-0" | S3X5.7 3'-0" | S3X5.7 3'-0" | S3X5.7 3'-0" | S3X5.7 3'-0" | S3X5.7 3'-0" | S3X5.7 3'-0" |
| .7 0" | S4X9.5 3'-0" | S4X9.5 3'-0" | S3X5.7 3'-0" | S3X5.7 3'-0" | S3X5.7 3'-0" | S3X5.7 3'-0" | S4X9.5 3'-0" | S4X9.5 3'-0" | S4X9.5 3'-0" | S4X9.5 3'-0" |
| .5 0" | S4X9.5 3'-0" | S4X9.5 3'-0" | S4X9.5 3'-0" | S4X9.5 3'-0" | S4X9.5 3'-0" | S4X9.5 3'-0" | S4X9.5 3'-0" | S4X9.5 3'-0" | S4X9.5 3'-0" | S4X9.5 3'-0" |
| .5 0" | S4X9.5 3'-0" | S4X9.5 3'-0" | S4X9.5 3'-0" | S4X9.5 3'-0" | S4X9.5 3'-0" | S4X9.5 3'-0" | S4X9.5 3'-0" | S4X9.5 3'-0" | S6X12.5 3'-0" | S6X12.5 3'-0" |
| 2.5 6" | S6X12.5 3'-0" | S6X12.5 3'-0" | S4X9.5 3'-0" | S4X9.5 3'-0" | S4X9.5 3'-0" | S6X12.5 3'-6" | S6X12.5 3'-6" | S6X12.5 3'-6" | S6X12.5 3'-6" | S6X12.5 3'-0" |
| 2.5 6" | S6X12.5 3'-6" | S6X12.5 3'-6" | S6X12.5 3'-6" | S6X12.5 3'-6" | S6X12.5 3'-0" | S6X12.5 3'-6" | S6X12.5 3'-6" | S6X12.5 3'-6" | S6X12.5 3'-6" | S6X12.5 3'-6" |
| 2.5 6" | S6X12.5 4'-0" | S6X12.5 4'-0" | S6X12.5 3'-6" | S6X12.5 3'-6" | S6X12.5 3'-6" | S6X12.5 3'-6" | S6X12.5 4'-0" | S6X12.5 4'-0" | S6X12.5 4'-0" | S6X17.5 4'-0" |
| 7.5 0" | S6X17.5 4'-6" | S8X18.4 4'-6" | S6X12.5 3'-6" | S6X12.5 4'-0" | S6X12.5 4'-0" | S6X17.5 4'-0" | S6X17.5 4'-0" | S6X17.5 4'-6" | S8X18.4 4'-6" | S8X18.4 4'-6" |
| 8.4 6" | S8X18.4 4'-6" | S8X18.4 5'-0" | S6X17.5 4'-0" | S6X17.5 4'-0" | S6X17.5 4'-6" | S8X18.4 4'-6" | S8X18.4 4'-6" | S8X18.4 5'-0" | S8X18.4 5'-0" | S8X18.4 5'-0" |
| 8.4 0" | S8X18.4 5'-0" | S8X18.4 5'-6" | S8X18.4 4'-6" | S8X18.4 4'-6" | S8X18.4 4'-6" | S8X18.4 5'-0" | S8X18.4 5'-0" | S8X18.4 5'-0" | S8X18.4 5'-6" | S8X18.4 5'-6" |
| 8.4 6" | S8X18.4 5'-6" | S8X18.4 5'-6" | S8X18.4 5'-0" | S8X18.4 5'-0" | S8X18.4 5'-0" | S8X18.4 5'-0" | S8X18.4 5'-6" | S8X18.4 5'-6" | W10X19.0 5'-6" | W10X19.0 6'-0" |
| .4 0" | W10X19.0 6'-0" | W10X19.0 6'-6" | S8X18.4 5'-6" | S8X18.4 5'-6" | S8X18.4 6'-0" | S8X18.4 6'-0" | W10X19.0 6'-0" | W10X19.0 6'-6" | W10X19.0 6'-6" | W10X19.0 6'-6" |
| 9.0 0" | W10X19.0 6'-6" | W10X19.0 7'-0" | S8X18.4 5'-6" | S8X18.4 5'-6" | W10X19.0 6'-0" | W10X19.0 6'-0" | W10X19.0 6'-6" | W10X19.0 6'-6" | W10X19.0 7'-0" | W10X22.0 7'-0" |
| 9.0 6" | W10X22.0 6'-6" | W10X22.0 7'-0" | W10X19.0 5'-6" | W10X19.0 6'-0" | W10X19.0 6'-0" | W10X19.0 6'-6" | W10X19.0 6'-6" | W10X22.0 6'-6" | W10X22.0 7'-0" | W10X22.0 7'-0" |
| 2.0 6" | W10X22.0 7'-0" | W10X22.0 7'-0" | W10X19.0 6'-0" | W10X19.0 6'-0" | W10X19.0 6'-6" | W10X22.0 6'-6" | W10X22.0 7'-0" | W10X22.0 7'-0" | W10X22.0 7'-0" | W10X22.0 7'-6" |
| 2.0 0" | W10X26.0 7'-6" | W10X26.0 7'-6" | W10X19.0 6'-6" | W10X22.0 6'-6" | W10X22.0 7'-0" | W10X22.0 7'-0" | W10X22.0 7'-0" | W10X26.0 7'-6" | W10X26.0 7'-6" | W10X30.0 8'-0" |
| 6.0 6" | W10X30.0 7'-6" | W10X30.0 8'-0" | W10X22.0 6'-6" | W10X22.0 7'-0" | W10X22.0 7'-0" | W10X26.0 7'-6" | W10X26.0 7'-6" | W10X26.0 7'-6" | W10X30.0 8'-0" | W10X30.0 8'-0" |
| 0.0 6" | W10X30.0 8'-0" | W10X30.0 8'-6" | W10X22.0 7'-0" | W10X22.0 7'-0" | W10X26.0 7'-6" | W10X26.0 7'-6" | W10X30.0 8'-0" | W10X30.0 8'-0" | W10X30.0 8'-6" | W10X30.0 8'-6" |

| WIDTH W | SPACING FOR POSTS |
|---|---|
| 1'- 5' | ONE POST |
| 6' | 1'* 4'* 1' |
| 7' | 1'* 5'* 1' |
| 8' | 1'* 6'* 1' |
| 9' | 1'* 7'* 1' |
| 10' | 1'* 8'* 1' |
| 11' | 1.5'* 8'* 1.5' |
| 12' | 2'* 8'* 2' |
| 13' | 2.5'* 8'* 2.5' |
| 14' | 3'* 8'* 3' |
| 15' | 3.5'* 8'* 3.5' |
| 16' | 4'* 8'* 4' |
| 17' | 1'* 7.5'* 7.5' * 1' |
| 18' | 1'* 8'* 8' * 1' |
| 19' | 1.5'* 8'* 8' * 1.5' |
| 20' | 2'* 8'* 8' * 2' |
| 21' | 2.5'* 8'* 8' * 2.5' |
| 22' | 3'* 8'* 8' * 3' |
| 23' | 3.5'* 8'* 8' * 3.5' |
| 24' | 4'* 8'* 8' * 4' |

(•)REPRESENTS ONE POST

URNS TOP & BOTTOM

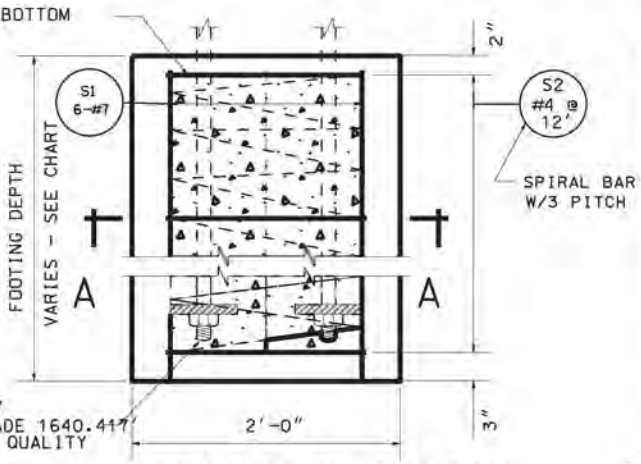


FOOTING ELEVATION

| BAR | LENGTH |
|---|---|
| S1 | FOOTING HEIGHT- 2" |
| S2 | 7"- 0" |

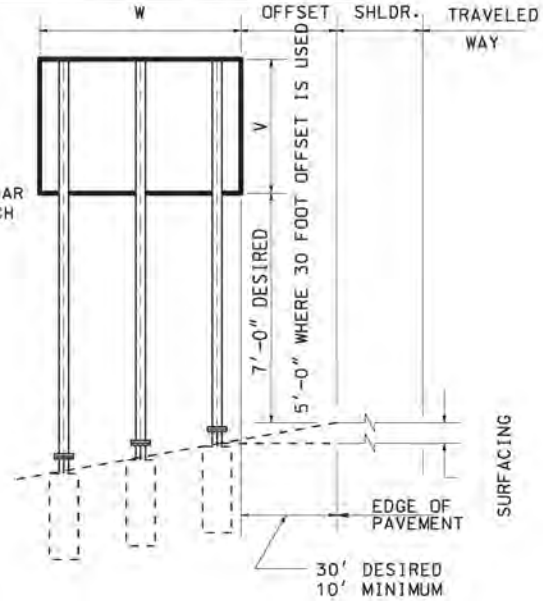


REAR ELEVATION

4" Ø X 2'-2"
4" Ø X 2'-2"
1" Ø X 2'-5"
1/4" Ø X 2'-6"
2" Ø X 2'-9"
OL. - 1 3/4" Ø X 2'-9"

TS

TION
TEEL

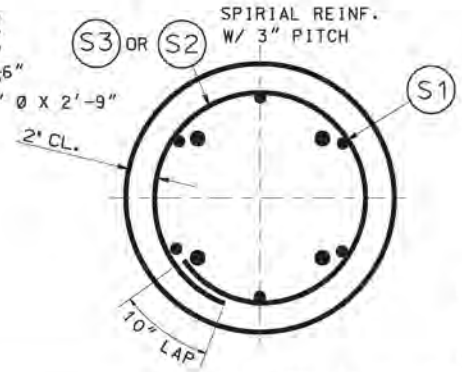


SECTION A - A

## NOTES:

1. ENTER CHART WITH KNOWN HORIZONTAL AND VERTICAL DIMENSIONS OF SIGN. PROCEED HORIZONTALLY AND VERTICALLY FROM GIVEN DIMENSIONS TO INTERSECTING SQUARE WHICH GIVES IN ORDER, TOP: NUMBER, SIZE AND WEIGHT OF SUPPORT SECTION OR OF STANDARD STRENGTH PIPE COLUMNS. BOTTOM: MINIMUM REQUIRED DEPTH OF FOOTING.
2. SEE STD DWG SN 12B FOR MATERIAL SPECIFICATIONS NOT GIVEN AND GENERAL NOTES.
3. DO NOT ATTACH SIGNS BELOW HINGE POINT.

REVISIONS

| NO. | DATE | APPR. | REMARKS |
|---|---|---|---|
| | | | |

PORTATION
: CONSTRUCTION

JAN.01,2005
DATE

JAN.01,2005
DATE

RECOMME

CHAIRMA
APPROVE

DEPUTY DIRECTOR

GROUND MOUNTED
SIGN INSTALLATION
DETAILS

STANDARD DRAWING TITLE

STD DWG
SN 12A

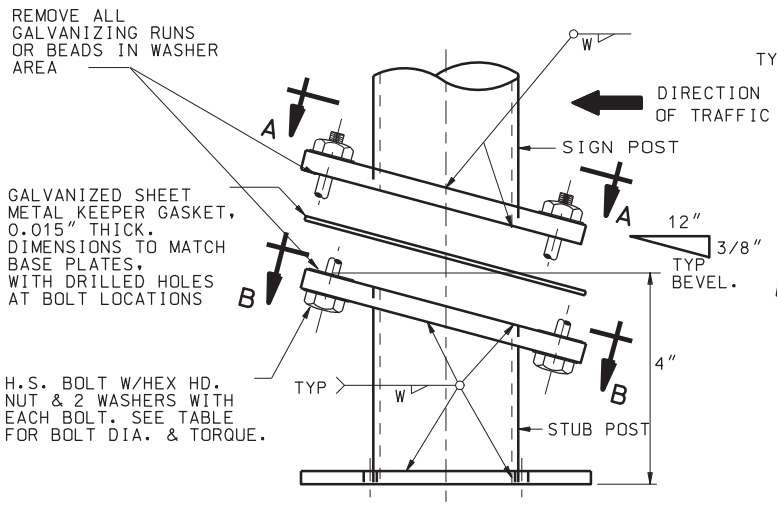


SIGN POST & STUB POST ELEVATION
(FOR PIPE COLUMNS)

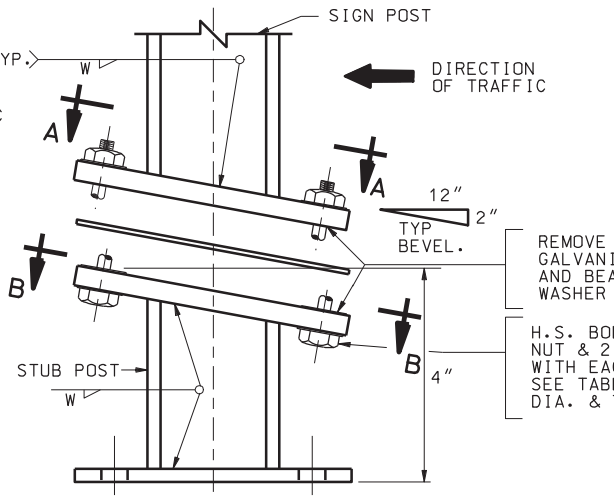


SIGN POST & STUB POST ELEVATION
(FOR S3 & S4 SECTIONS)

| BASE CONNECTION DATA TABLE | | | | | | | | | | FUSE PLATE | | | | |
|---|---|---|---|---|---|---|---|---|---|---|---|---|---|---|
| POST SIZE | BOLT SIZE & TORQUE | A | B | C | D | E | F | $T_1$ | W | F | G | H | J | K |
| S3 X 5.7 | 1/2" DIA.X 2 1/2" 10 FT.-LB. TORQUE | 3" | 7 1/2" | 3/4" | 1 1/2" | 3/4" | 6" | 5/8" | 3/16" | 3 7/16" | 2 1/4" | 1 1/8" | 2 3/8" | 1 1 |
| S4 X 9.5 | | 3 1/2" | 7 1/2" | 3/4" | 2" | 3/4" | 6" | 5/8" | 1/4" | 3 7/16" | 2 1/4" | 1 1/8" | 2 3/4" | 1 1 |
| S6 X 12.5 | 5/8" DIA. X 3" 24 FT.-LB. TORQUE | 4 1/2" | 10" | 1 1/8" | 2 1/4" | 3/4" | 8 1/2" | 3/4" | 5/16" | 4 3/8" | 2 1/2" | 1 1/4" | 3 3/8" | 2 |
| S6 X 17.5 | | 4 1/2" | 10" | 1 1/8" | 2 1/4" | 3/4" | 8 1/2" | 3/4" | 5/16" | 4 3/8" | 2 1/2" | 1 1/4" | 3 5/8" | 2 |
| S8 X 18.4 | | 5" | 12" | 1 1/8" | 2 3/4" | 3/4" | 10 1/2" | 3/4" | 5/16" | 4 3/8" | 2 1/2" | 1 1/4" | 4" | 2 1 |
| W10 X 19.0 | 3/4" DIA.X 3 1/2" 38 FT.-LB. TORQUE | 6" | 1'-2 1/2" | 1 1/4" | 3 1/2" | 7/8" | 1'-0 3/4" | 1" | 5/16" | 6" | 3" | 1 1/2" | 4" | 2 1 |
| W10 X 22.0 | | 7" | 1'-3" | 1 1/2" | 4" | 7/8" | 1'-1 1/4" | 1" | 5/16" | 6" | 3" | 1 1/2" | 5 3/4" | 3 3 |
| W10 X 26.0 | | 7" | 1'-3" | 1 1/2" | 4" | 7/8" | 1'-1 1/4" | 1" | 5/16" | 6" | 3" | 1 1/2" | 5 3/4" | 3 3 |
| W10 X 30.0 | 1" DIA.X 3 1/2" 51 FT.-LB. TORQUE | 7" | 1'-3" | 1 1/2" | 4" | 7/8" | 1' 1 1/4" | 1 1/8" | 5/16" | 6" | 3" | 1 1/2" | 5 3/4" | 3 3 |
| 3" DIA. STD. PIPE | 1/2" DIA.X 2 1/2" 10 FT.-LB. TORQUE | 4 1/2" | 7 1/2" | 1" | 2 1/2" | 3/4" | 6" | 3/4" | 1/4" | NO FUSE PLATE RE | | | | |
| 4" DIA. STD. PIPE | | 5 1/2" | 8 1/2" | 1" | 3 1/2" | 3/4" | 7" | 3/4" | 1/4" | | | | | |
| 5" DIA. STD. PIPE | 5/8" DIA.X 3 1/2" 24 FT.-LB. TORQUE | 6 1/2" | 10 1/4" | 1 1/4" | 4" | 7/8" | 8 1/2" | 1" | 1/4" | | | | | |
| 6" DIA. STD. PIPE | | 7 1/2" | 11 1/2" | 1 1/4" | 5" | 7/8" | 9 3/4" | 1" | 5/16" | | | | | |
| 8" DIA. STD. PIPE | | 9 1/2" | 1'-2" | 1 1/4" | 7" | 7/8" | 1'-0 1/4" | 1" | 5/16" | | | | | |

## GENERAL NOTES:

1. CONFORM TO THE LATEST EDITION OF AASHTO STANDARD SPECIFICATION FOR STRUCTURAL SUPPORTS FOR HIGHWAY SIGNS, LUMINAIRES AND TRAFFIC SIGNALS.
2. FABRICATE BASE, SLIP AND FUSE PLATES FROM STEEL MEETING THE REQUIREMENTS SPECIFIED FOR THE SIGN POST TO WHICH THEY ARE ATTACHED EXCEPT WHERE PIPE POST ARE USED. IN WHICH CASE CONFORM TO THE REQUIREMENTS OF ASTM A 36.
3. USE STRUCTURAL STEEL THAT IS STRUCTURAL CARBON STEEL CONFORMING TO THE FOLLOWING ASTM DESIGNATIONS: STANDARD PIPE 3"-8" DIA. ASTM A 53 GRADE B. W AND S SHAPES ASTM A 36.
4. USE BOLTS, NUTS AND WASHERS CONFORMING TO ASTM A 325 AND CADMIUM ELECTRO PLATING CONFORMING TO ASTM A 165 NS.
5. WELD TO THE REQUIREMENTS OF THE AASHTO STANDARD SPECIFICATION FOR WELDING OF STRUCTURAL STEEL HIGHWAY BRIDGES.
6. SAW CUTTING ALL PLATE CUTS IS PREFERRED. FLAME CUTTING WILL BE PERMITTED PROVIDED ALL EDGES ARE GROUND. METAL PROJECTING BEYOND THE PLATE FACE WILL NOT BE TOLERATED.
7. GALVANIZE ALL STRUCTURAL STEEL AFTER FABRICATION IN CONFORMANCE TO AASHTO M 111 (ASTM A 123).
8. TIGHTEN HIGH STRENGTH BOLTS IN THE BASE CONNECTION ONLY TO THE TORQUE LIMITS SHOWN IN THE TABLE. DO NOT OVER TIGHTEN.
9. TIGHTEN ALL HIGH STRENGTH FRICTION FUSE BOLTS IN THE SHOP. USE DIRECT-TENSION INDICATOR WASHERS TO TIGHTEN THE BOLTS. SEE STANDARD SPECIFICATION SECTION 05120.
10. MOUNT ALL SIGNS DESIGNATED FOR MOUNTING WITH BREAKAWAY BASES ON UNDIVIDED HIGHWAYS OR ON DIVIDED HIGHWAYS OF LESS THAN FOUR LANES WITH BREAKAWAYS PLATES PARALLEL TO THE BASE PLATES.

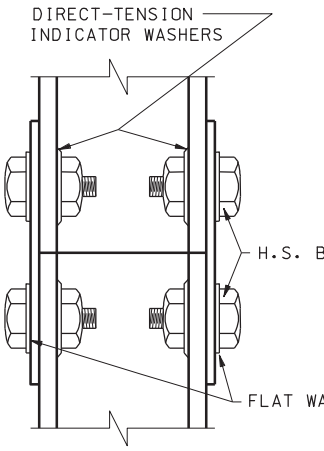


DETAIL "A" HINGE

DGN File:N:\Esd\Standard.Drawings\Imperial\2005Approved\Signs (SN)\sn12b.dgn
25-JAN-2005

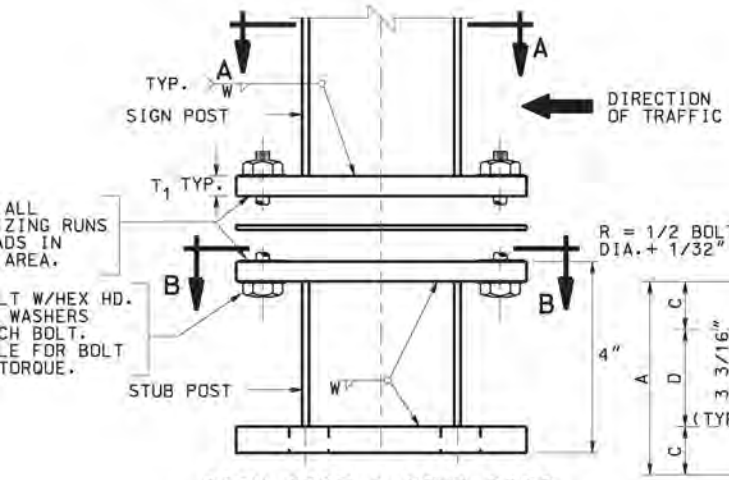


SIGN POST & STUB POST ELEVATION
(FOR S6, S8 & W10 SECTIONS)

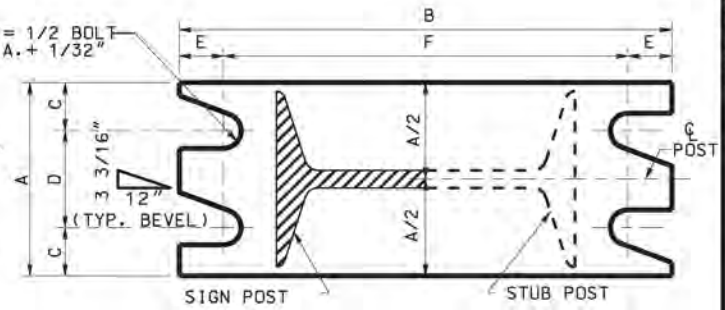


SECTION A-A SECTION B-B
(SEE TABLE FOR DIMENSIONS)

SECTIONS SHOWN ARE FOR INSTALLATIONS ON RIGHT SHOULDER AND IN GORE. PLATE SLOT BEVELS ARE OPPOSITE HAND FROM THAT SHOWN FOR INSTALLATION ON LEFT SHOULDER "S" POST IS SHOWN. PIPE POST SELECTIONS ARE SIMILAR.

DATA TABLE

| K | L | N | $T_2$ | $D_1$ | BOLT DIA. |
|---|---|---|---|---|---|
| /2" | 7/16" | 1/2" | 1/4" | 9/16" | 1/2" |
| /2" | 5/8" | 1/2" | 5/16" | 9/16" | 1/2" |
| " | 11/16" | 5/8" | 3/8" | 9/16" | 1/2" |
| " | 13/16" | 5/8" | 3/8" | 11/16" | 5/8" |
| /4" | 7/8" | 5/8" | 7/16" | 13/16" | 3/4" |
| /4" | 7/8" | 3/4" | 3/8" | 15/16" | 3/4" |
| /4" | 1" | 7/8" | 3/8" | 15/16" | 7/8" |
| /4" | 1" | 7/8" | 7/16" | 15/16" | 7/8" |
| /4" | 1" | 7/8" | 1/2" | 15/16" | 7/8" |

QUIRED ON PIPE COLUMN

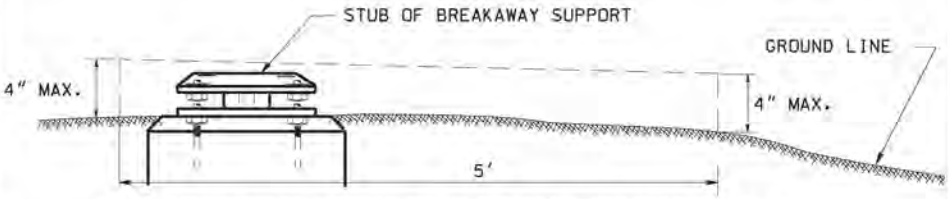


PLACE SIGN SUPPORT FOUNDATION SO IMPACTING VEHICLES DO NOT SNAG ON EITHER FOUNDATION OR ANY SUBSTANTIAL REMAINS OF SIGN SUPPORT. GRADE SURROUNDING TERRAIN TO PERMIT IMPACTING VEHICLES TO PASS OVER FOUNDATION AND PORTIONS OF SIGN SUPPORTS WHICH REMAIN IN THE GROUND OR ARE RIGIDLY ATTACHED TO THE FOUNDATION.

BREAKAWAY SUPPORT STUB HEIGHT MEASUREMENT

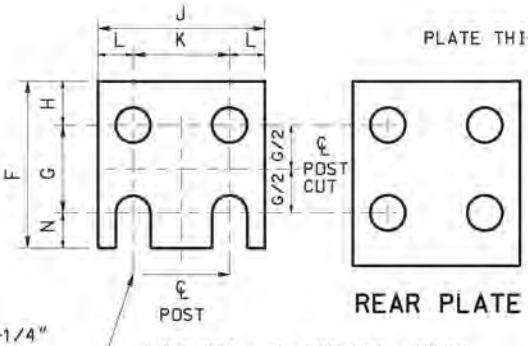


REAR PLATE

HOLE DIA.= D USE H.S. BOLTS W/HEX HEAD AND NUT. ONE FLAT WASHER UNDER EACH BOLT HEAD AND DIRECT-TENSION INDICATOR WASHER UNDER NUTS.

FACE PLATE

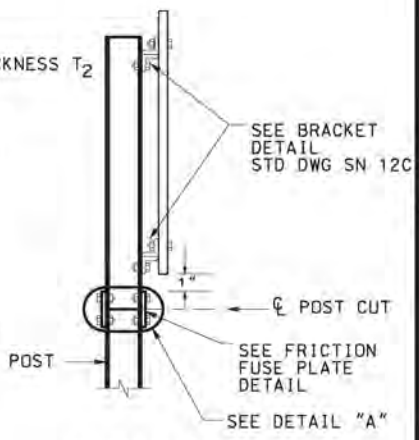


SIDE VIEW

FUSE PLATE DETAIL
(SEE TABLE FOR DIMENSIONS)

PLACE SLOTTED FUSE PLATE ON FACE OF POST SLOTS DOWNWARD.

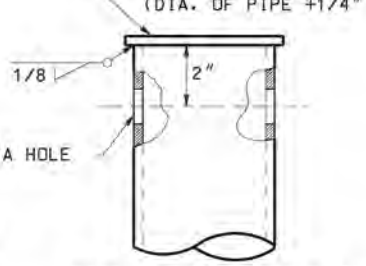


TOP OF PIPE DETAIL

REVISIONS

| NO. | DATE | APPR. | REMARKS |
|---|---|---|---|
| | | | |

PORTATION
: CONSTRUCTION

JAN.01,2005
DATE

JAN.01,2005
DATE

RECOMME
CHAIRMA APPROVE
DEPUTY DIRECTOR

GROUND MOUNTED SIGN INSTALLATION DETAILS

STANDARD DRAWING TITLE

STD DWG
SN 12B

## NOTES:

1. SEE STD DWG SN 12B FOR GENERAL NOTES.
2. USE 18-8 STAINLESS STEEL FOR THE 1/4" R.H. MACHINE S AND THE 3/8" BOLTS AND WASHERS USED ON THE SIGN FACE ELECTROPLATING CONFORMING TO ASTM B 766 FOR ALL OTH AND WASHERS.
3. SHOP GALVANIZE THE ENTIRE SIGN BRACING ASSEMBLY, ST TO MEET AASHTO M 111 (ASTM A 123).
4. USE ASTM A 107, GRADE 1020 MERCHANT QUALITY FOR U-B
5. USE BOTH 1/4" FLAT WASHERS AND 1/4" LOCK WASHERS ON AL USE LOCK WASHERS ON ALL BOLTS.

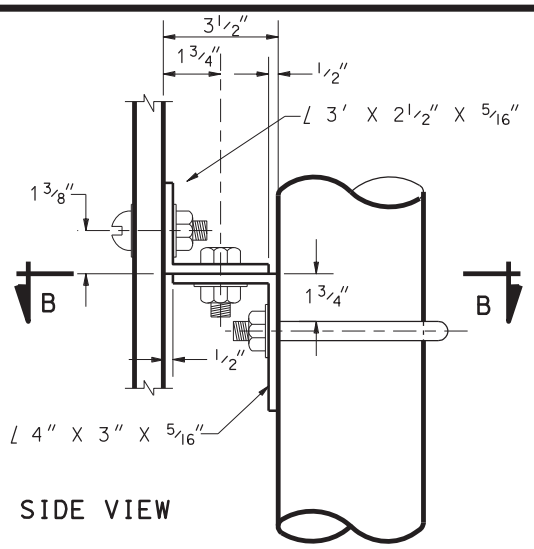


SIDE VIEW

## BRACKET DETAIL

(FOR PIPE COLUMNS)

PLACE CORNER SCREWS AS NEAR THE END OF THE ANGLE AS POSSIBLE MAINTAINING A 1/2" CLEARANCE FROM THE ANGLE EDGE AND AVOIDING CONFLICT WITH THE BORDER MAETRIAL.

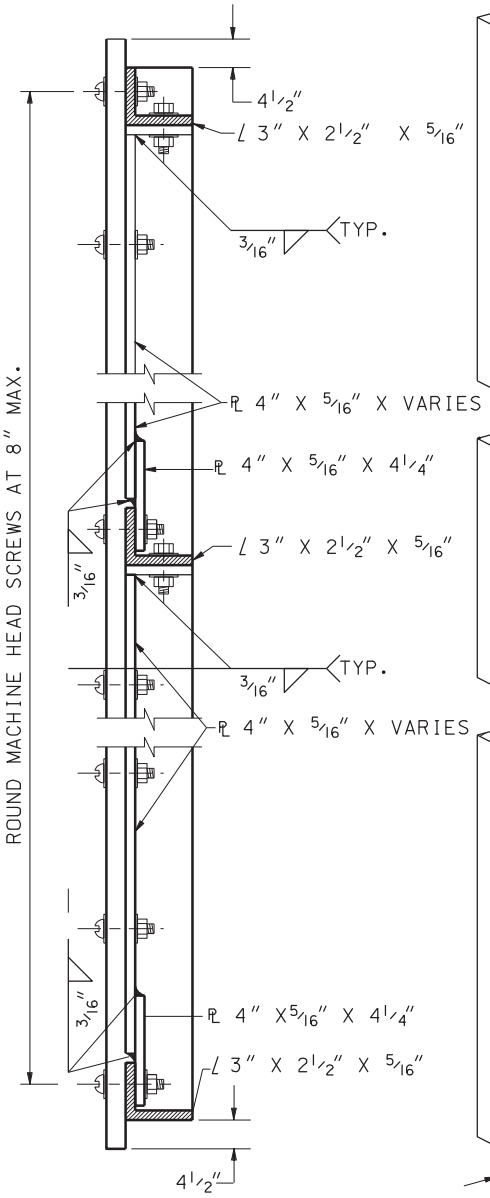


## SECTION A-A

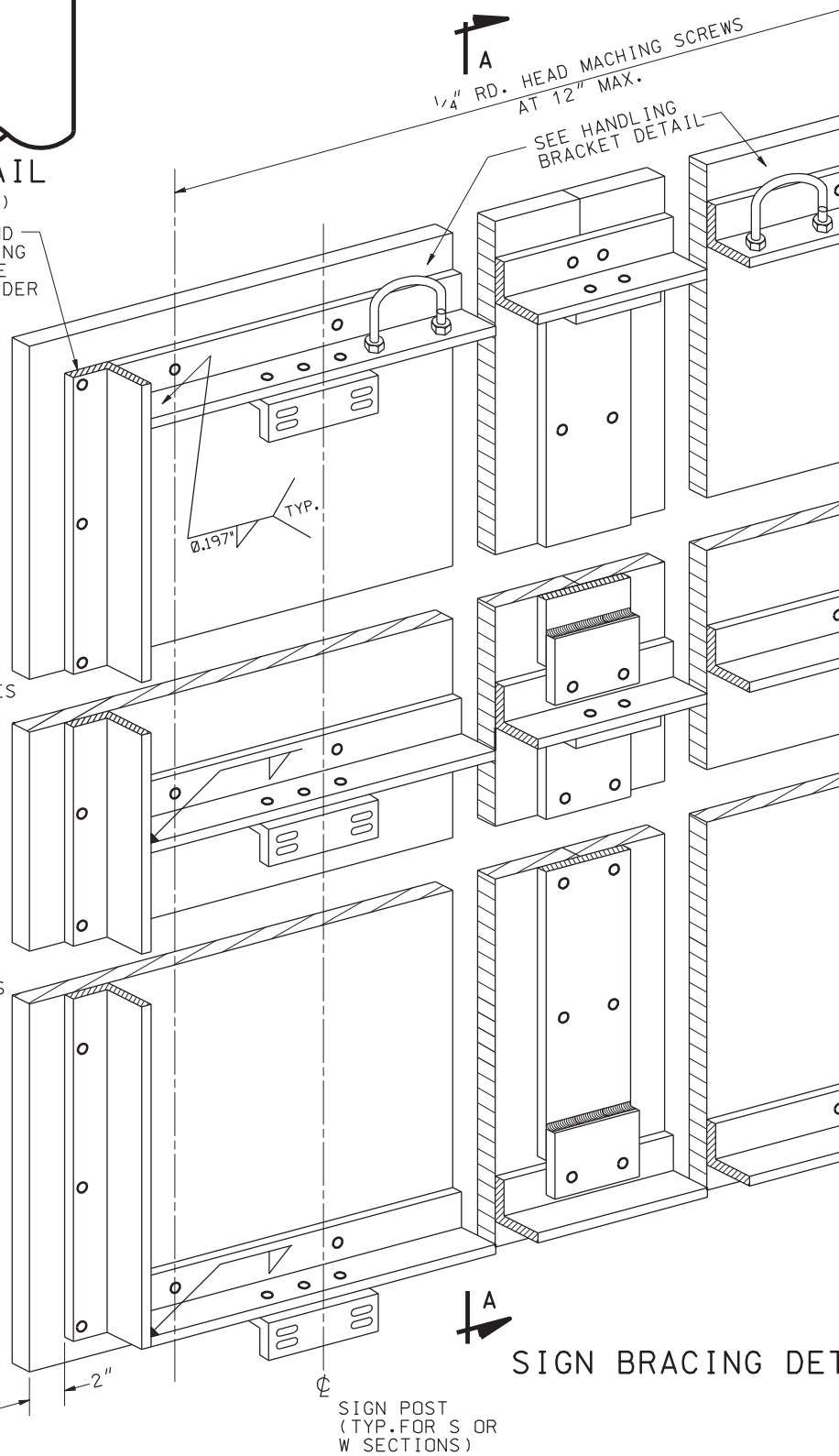


## SIGN BRACING DET

DGN File: N:\Esd\Standard.Drawings\Imperial\2005Approved\Signs (SN)\sn12c.dgn

25-JAN-2005

CREWS AND WASHERS
. USE CADMIUM
HER BOLTS, NUTS

TEEL SIGN POST AND U-BOLTS

BOLT.

LL 1/4" R.H. SCREWS.

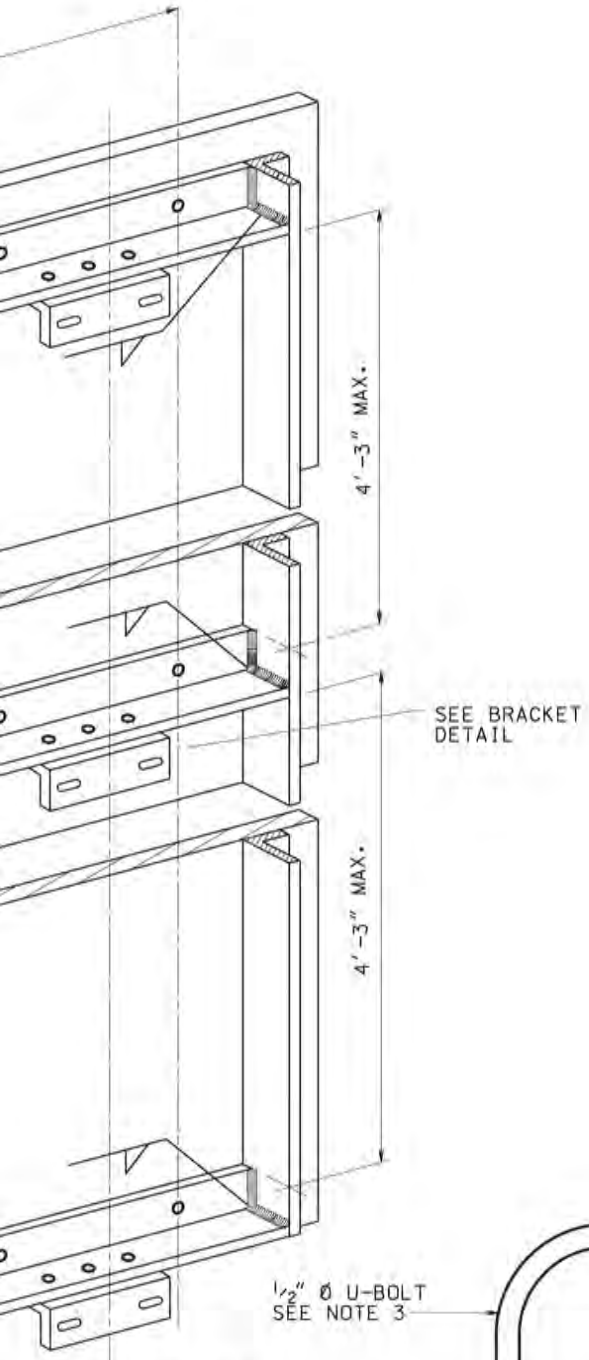


TAILS

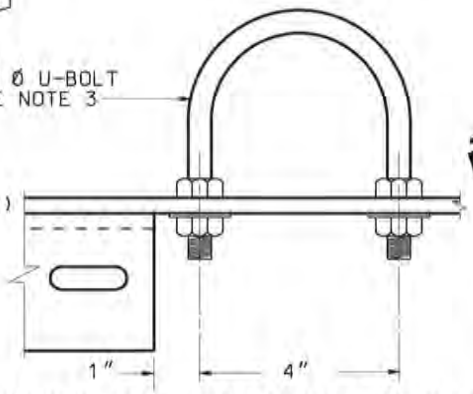


HANDLING BRACKET DETAIL

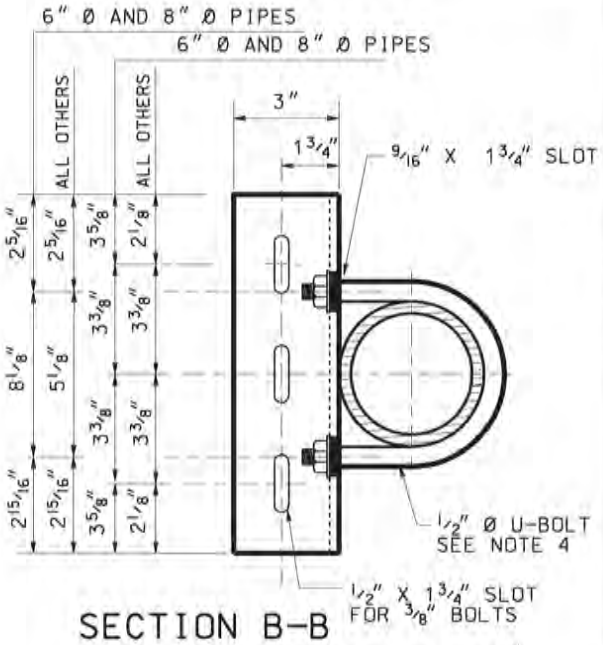


SECTION B-B

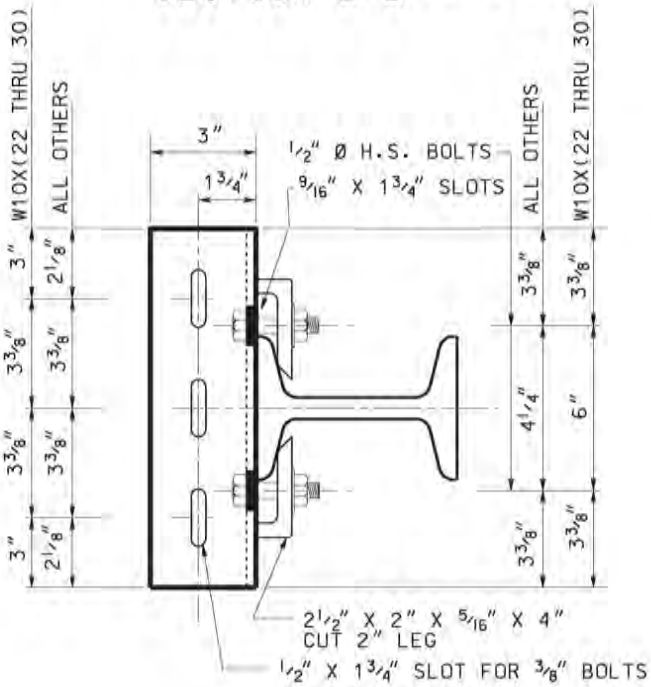


SECTION C-C

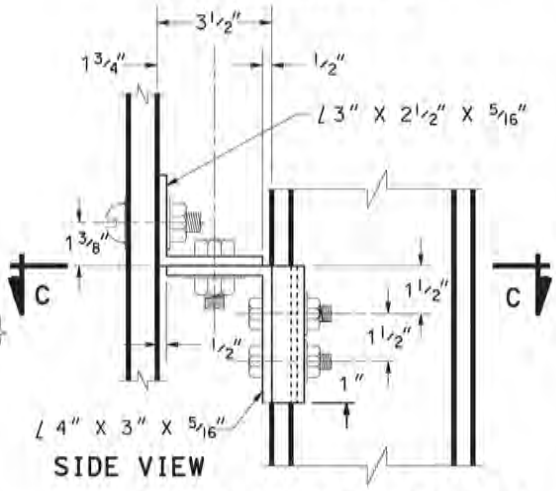


SIDE VIEW

BRACKET DETAIL

(FOR S OR W COLUMNS)

| NO. | DATE | APPR. | REMARKS |
|---|---|---|---|
| | | | |

REVISIONS

PORTATION
CONSTRUCTION

JAN.01,2005
DATE

JAN.01,2005
DATE

S

RECOMME

CHAIRMA
APPROVE

DEPUTY DIRECTOR

GROUND MOUNTED
SIGN INSTALLATION
DETAILS

STANDARD DRAWING TITLE

STD DWG
SN 12C

FREEWAY CRO

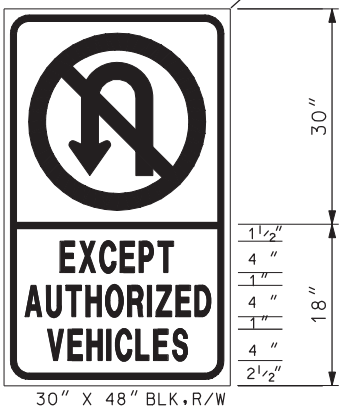


SIGN
R3-4

CROS
FOR 1

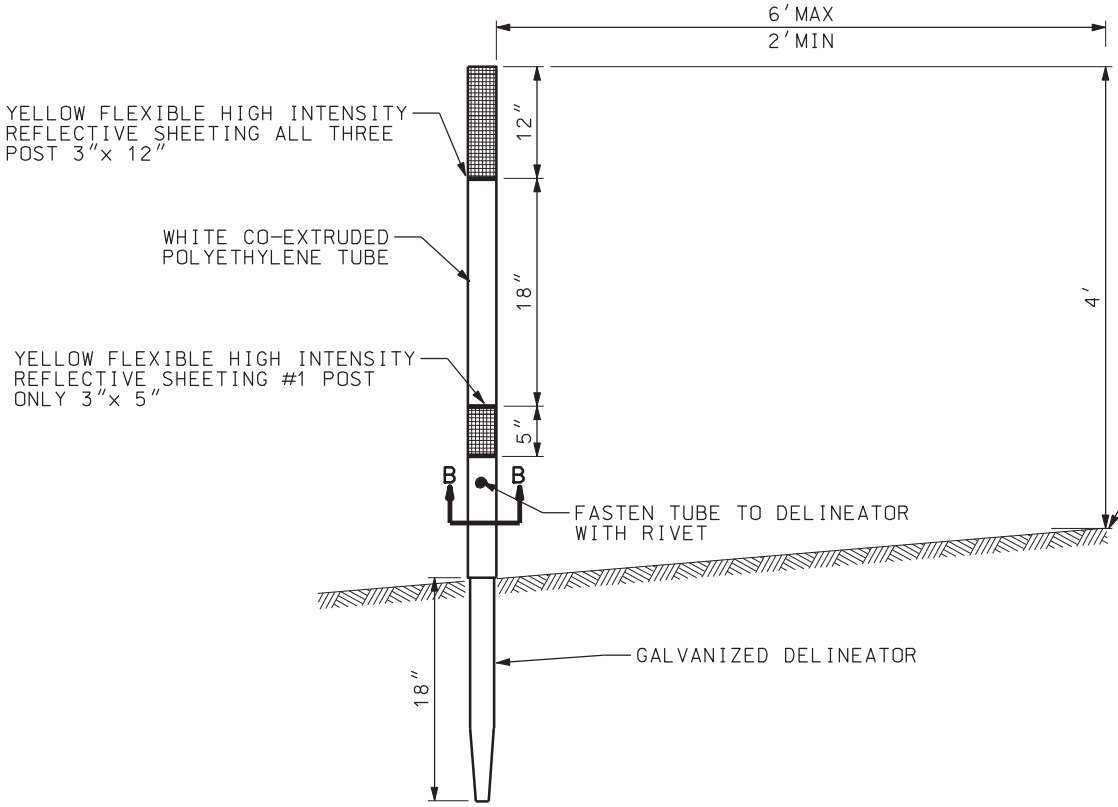


SECTION A-A

DGN File:N:\Esd\Standard.Drawings\Imperial\2005Approved\Striping (ST)\st02.dgn
25-JAN-2005

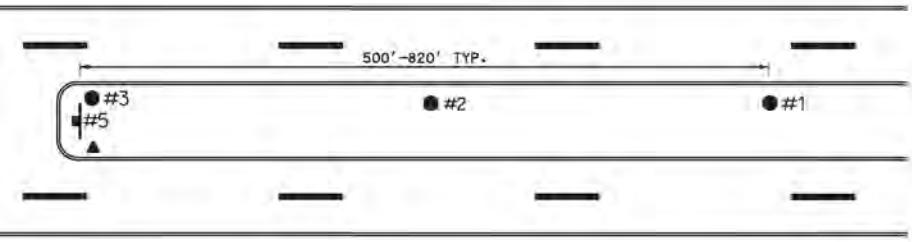


SSOVER

**LEGEND**

● = WHITE FLEXIBLE GUIDE POST

▲ = TYPE II DELINEATOR

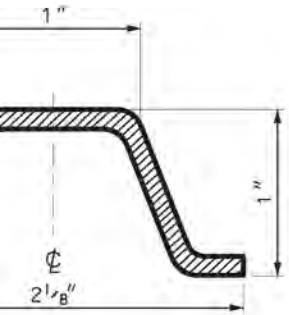


S SECTION
.2 LB/FT POST

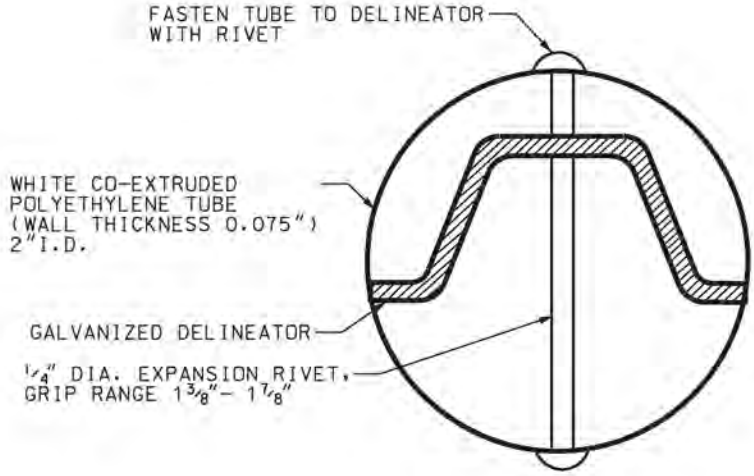


**SECTION B-B**
SEE NOTES 2,3

**NOTES:**

1. USE EXISTING DELINEATOR SPACING WHEN POSSIBLE.
   POST #2 SPACED EVENLY BETWEEN POST #1 & #3
   POST #3 PLACE 10 FEET IN ADVANCE OF POINT OF TANGENCY.
2. USE GALVANIZED STEEL POST WITH 5/16" HOLES ON 1" SPACING, FULL LENGTH OF POST. ATTACH WHITE POLYETHYLENE TUBE WITH REFLECTIVE SHEETING AS SHOWN.
3. USE OTHER APPROPRIATE WHITE FLEXIBLE GUIDE POST UPON APPROVAL FROM ENGINEER FOR MAINTENANCE.
4. INSTALL TYPE II DELINEATOR AS SHOWN.
5. USE A SIGN AT EACH END OF CROSSING ADJACENT TO APPROACHING TRAFFIC WHERE THE MEDIAN IS SEPARATED BY MORE THAN 150 FEET.

REVISIONS

| NO. | DATE | APPR. | REMARKS |
|---|---|---|---|
| | | | |

PORTATION
: CONSTRUCTION

JAN.01.2005 DATE

JAN.01.2005 DATE

S

RECOMME

CHAIRMA APPROVE

DEPUTY DIRECTOR

FREEWAY CROSSOVER MARKINGS

STANDARD DRAWING TITLE

STD DWG
ST 2

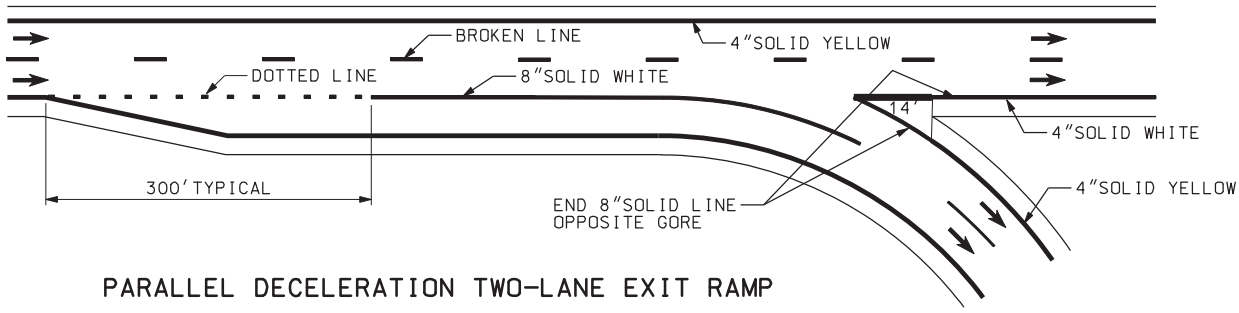


PARALLEL DECELERATION TWO-LANE EXIT RAMP

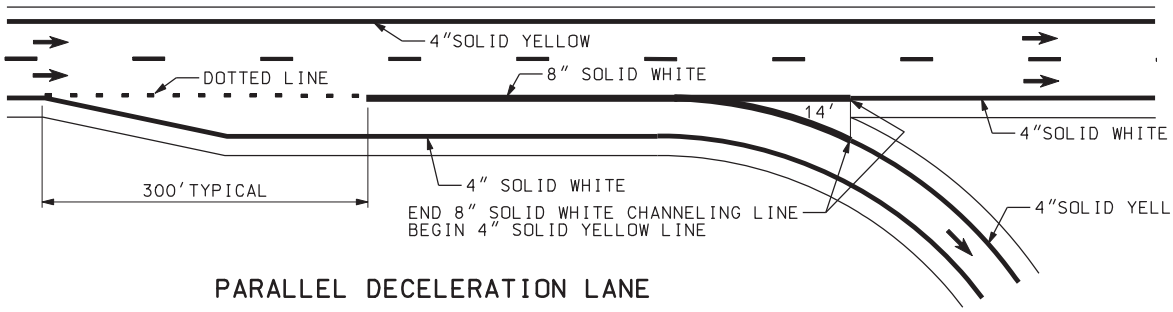


PARALLEL DECELERATION LANE

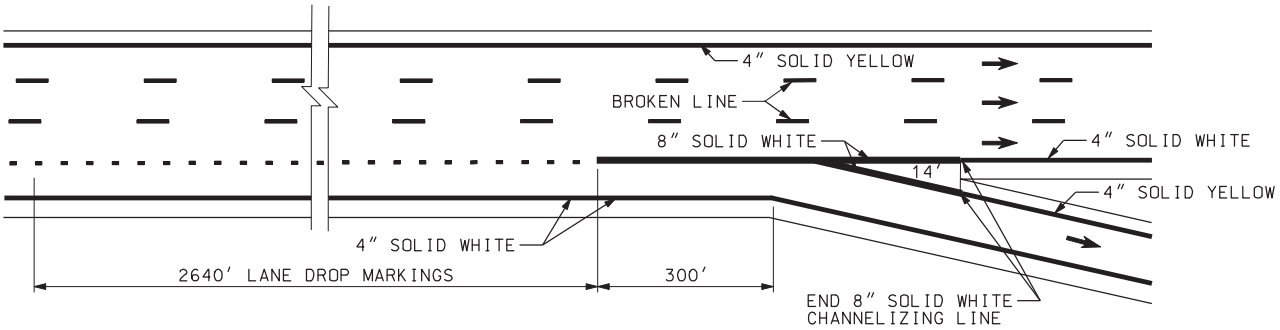


LANE DROP EXIT RAMP

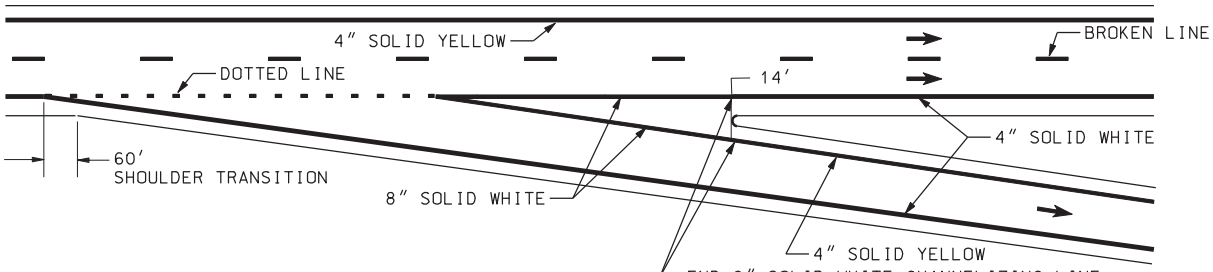


TYPICAL EXIT RAMP

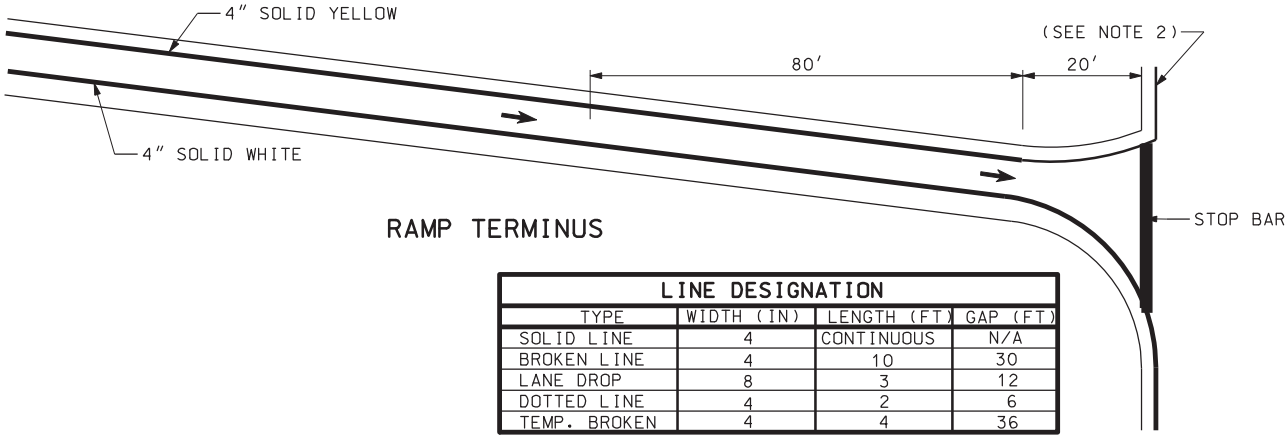


RAMP TERMINUS

| LINE DESIGNATION | | | |
|---|---|---|---|
| TYPE | WIDTH (IN) | LENGTH (FT) | GAP (FT) |
| SOLID LINE | 4 | CONTINUOUS | N/A |
| BROKEN LINE | 4 | 10 | 30 |
| LANE DROP | 8 | 3 | 12 |
| DOTTED LINE | 4 | 2 | 6 |
| TEMP. BROKEN | 4 | 4 | 36 |

DGN File:N:\Esd\Standard_Drawings\Imperial\2005Approved\Striping (ST)\st03.dgn
25-JAN-2005

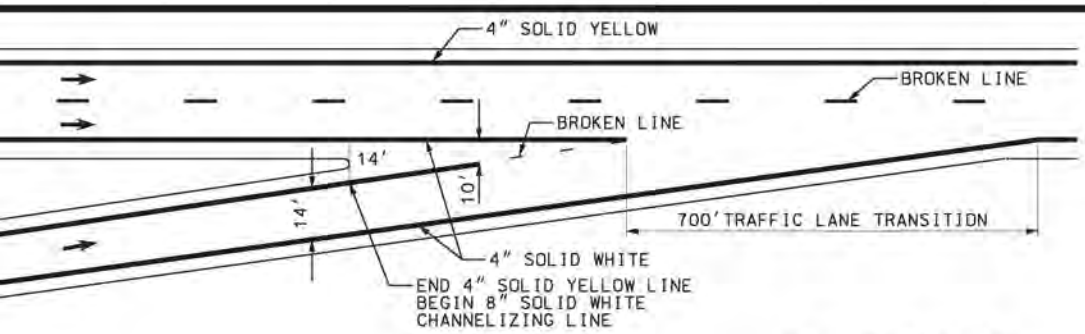


ENTRANCE RAMP

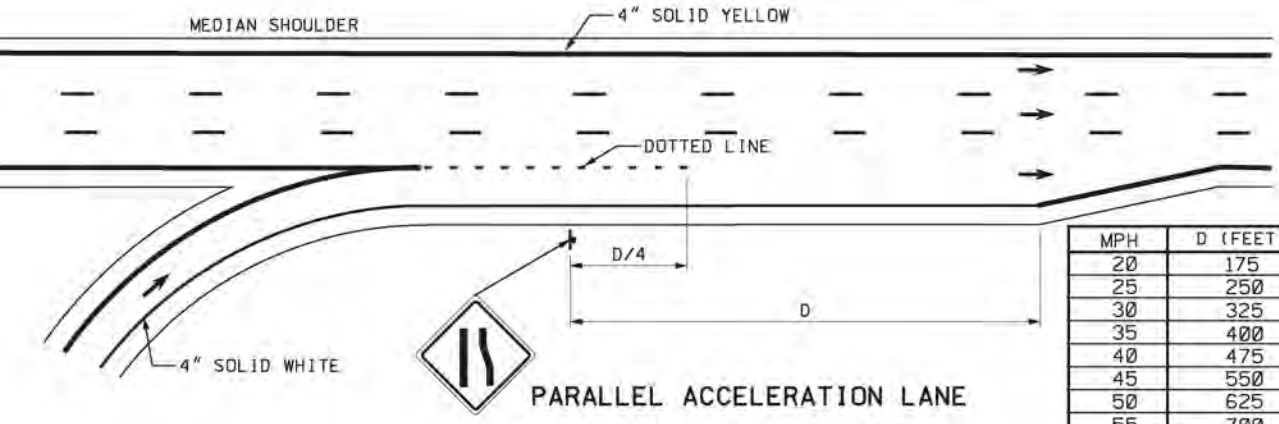


PARALLEL ACCELERATION LANE

| MPH | D (FEET) |
|---|---|
| 20 | 175 |
| 25 | 250 |
| 30 | 325 |
| 35 | 400 |
| 40 | 475 |
| 45 | 550 |
| 50 | 625 |
| 55 | 700 |
| 60 | 775 |
| 65 | 850 |
| 70 | 925 |
| 75 | 1000 |

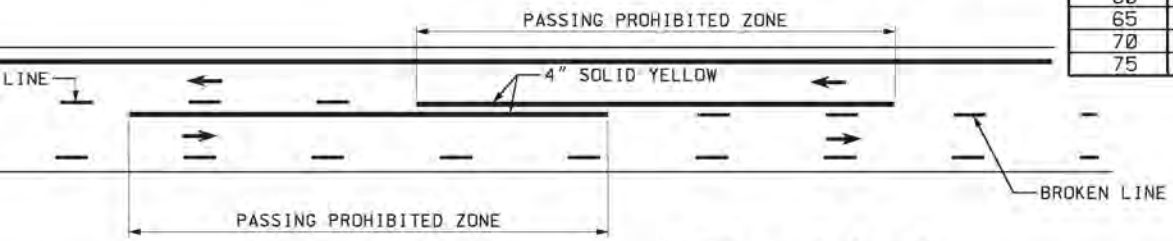


TWO-LANE TWO-WAY

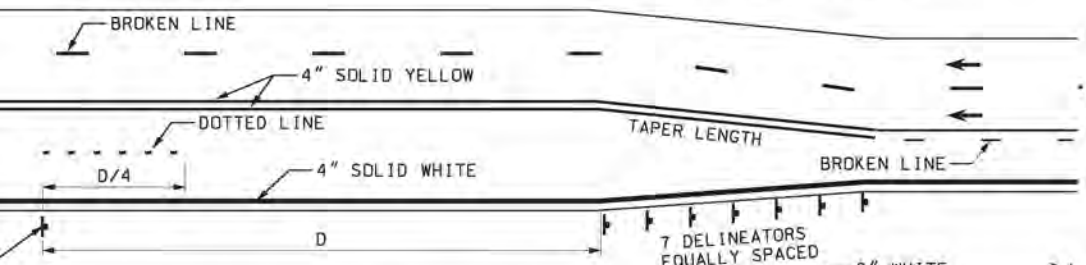


LANE DROP

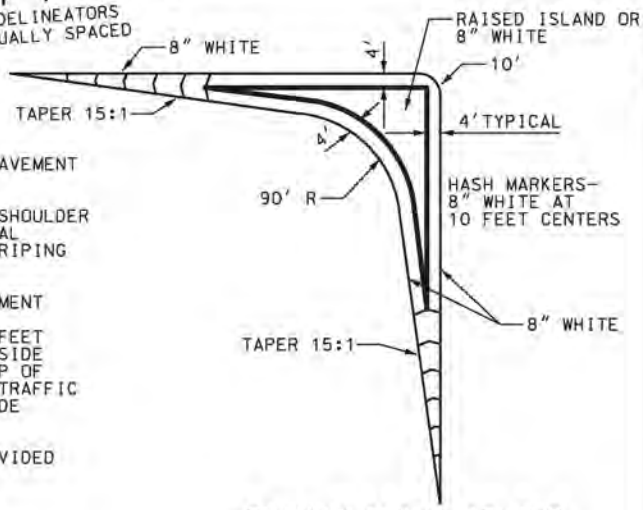


CHANNELIZING ISLAND

## NOTES:

1. FULLY REFLECTORIZE ALL WHITE AND YELLOW PAVEMENT MARKINGS.
2. TIE RAMP SHOULDER STRIPING INTO EXISTING SHOULDER STRIPING ON THE CROSS STREET WITH A GRADUAL TRANSITION. DISCONTINUE RAMP SHOULDER STRIPING AT THE CROSS STREET EDGE OF PAVEMENT.
3. PAINT A SHOULDER LINE IN AREAS WHERE PAVEMENT EXTENDS TO CURB AND GUTTER. TO DEFINE THE TRAVEL PATH OF A TYPICAL LANE ( 11 OR 12 FEET WIDE ) WHEN THE LATERAL DISTANCE FROM OUTSIDE BROKEN LINE OR PERMISSIVE TURN LANE TO LIP OF GUTTER IS 16 FEET OR GREATER. THE REGION TRAFFIC ENGINEER CAN AUTHORIZE EXCEPTIONS TO EXLUDE SHOULDER LINES IN THESE AREAS.
4. PAINT THE LEFT EDGE OF EACH ROADWAY OF DIVIDED ROADS WITH A YELLOW SHOULDER LINE.
5. GET APPROVAL FOR CHANGES TO EXISTING OR INSTALLATION OF NEW PASS ZONES BY TRAFFIC AND SAFETY DIVISION.
6. CONTACT THE REGION TRAFFIC ENGINEER FOR STRIPING AND PAVEMENT MARKINGS ON MULTI-LANE RAMP TERMINI.

REVISIONS

| NO. | DATE | APPR. | REMARKS |
|---|---|---|---|
| | | | |

PORTATION
: CONSTRUCTION

JAN.01,2005
DATE

JAN.01,2005
DATE

S

RECOMME

CHAIRMA
APPROVE

DEPUTY DIRECTOR

TYPICAL PAVEMENT MARKINGS

STANDARD DRAWING TITLE

STD DWG

ST 3

TYPE I

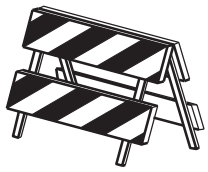

TYPE II

BARRICADES

NOTES 1, 2

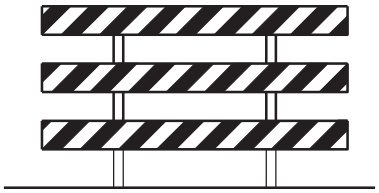

TYPE III

NOTE 2

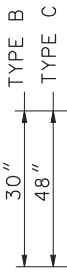


TYPE
TYPE

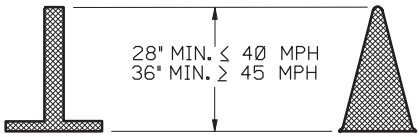


TUBULAR MARKERS
DAYLIGHT HOURS ONLY

CONES
DAYLIGHT HOURS ONLY

FE

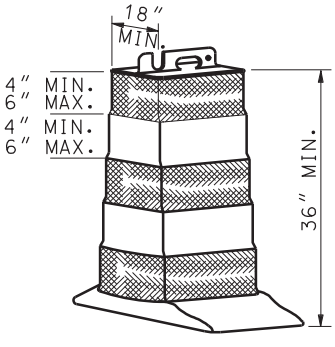


ONE-PIECE RECTANGULAR
W/REFLECTIVE BANDS

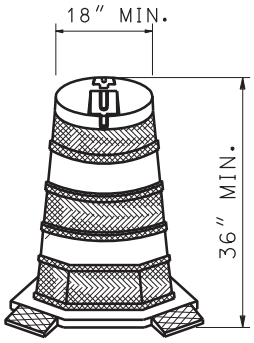


TWO-PIECE ROUND
W/REFLECTIVE BANDS

PLASTIC DRUMS
SEE NOTE 4

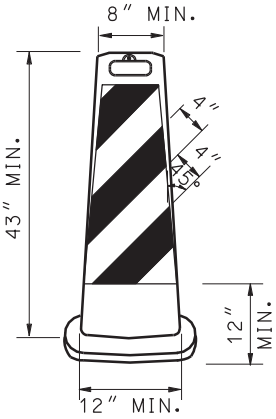

VERTICAL PA
SEE NOTE

DGN File:N:\Esd\Standard Drawings\Imperial\2005Approved\Traffic Control (TC)\tc01a.dgn
25-JAN-2005

# ADVANCE WARNING ARROW PANELS

SEE NOTE 3

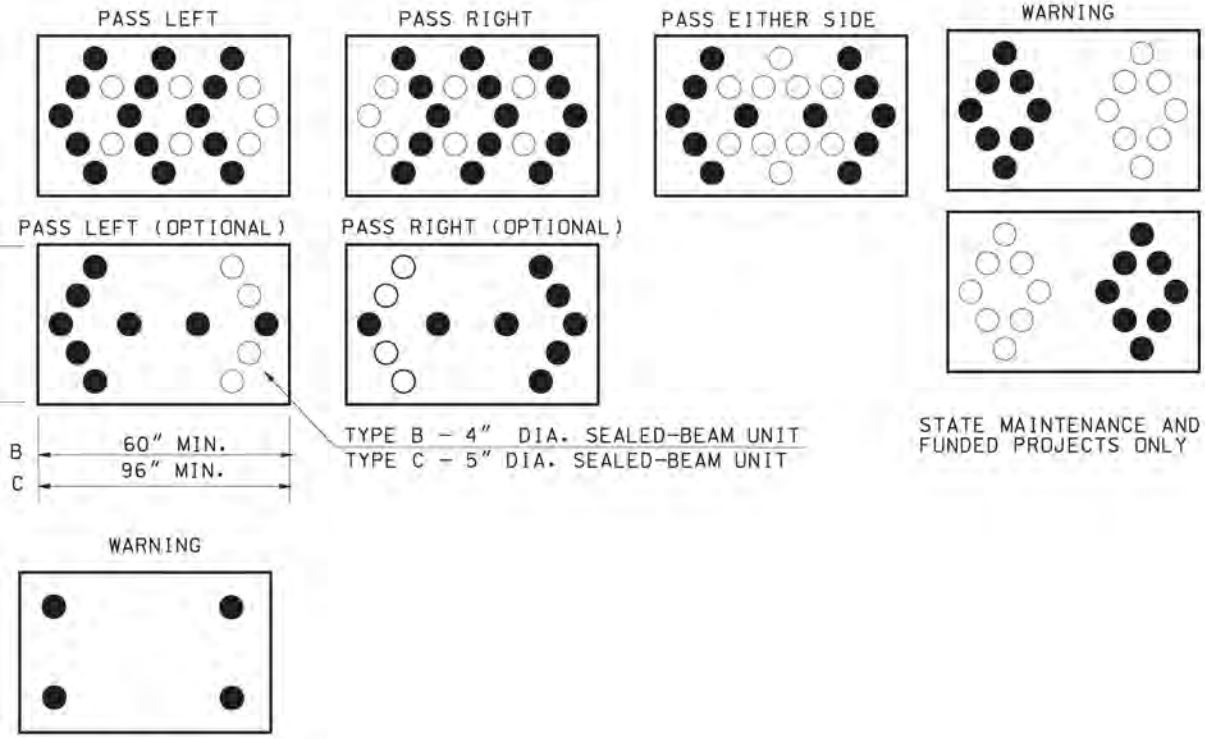

ANELS
1

## NOTES:

1. A MINIMUM OF 270 SQUARE INCHES OF RETROREFLECTIVE MATERIAL PLACED A MINIMUM OF 12 INCHES ABOVE THE ROADWAY SURFACE IS REQUIRED ON BARRICADES AND VERTICAL PANELS WHEN USED ON THE INTERSTATE OR ROADWAYS WITH A POSTED SPEED OF GREATER THAN 45 MPH. PLACE BARRICADES AND VERTICAL PANELS IN SUCH A MANNER THAT THEY ARE VISIBLE TO APPROACHING TRAFFIC.
2. USE SANDBAGS WITH SAND OR OTHER COMPARABLE SOFT MATERIAL AS BALLAST. DO NOT PLACE BALLAST HIGHER THAN 12 INCHES ABOVE THE ROADWAY AND DO NOT COVER ANY REFLECTIVE AREA OF RAILS OR SIGNS.
3. PLACE THE BOTTOM EDGE OF THE ADVANCE WARNING ARROW PANELS A MINIMUM OF 7 FEET ABOVE THE ROADWAY SURFACE.
4. USE PLASTIC DRUMS AS LANE CLOSURE TAPER DEVICES FOR SPEEDS 50 MPH AND GREATER.

REVISIONS

| NO. | DATE | APPR. | REMARKS |
|---|---|---|---|
| | | | |

PORTATION
: CONSTRUCTION

RECOMME S — JAN.01,2005 DATE

CHAIRMA APPROVE — JAN.01,2005 DATE

DEPUTY DIRECTOR

STANDARD DRAWING TITLE

CONSTRUCTION ZONE CHANNELIZATION DEVICES

STD DWG

TC 1A

NOTES 1, 5

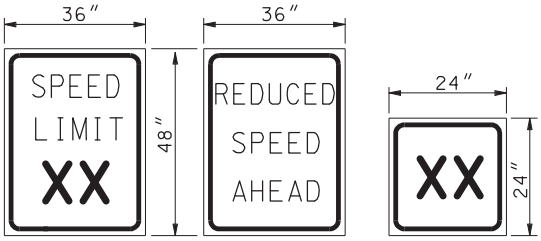


NOTE 6

## REDUCED SPEED SIGNING

* REGULATORY – BLACK/WHITE

** ADVISORY – BLACK/ORANGE

XX SPEED

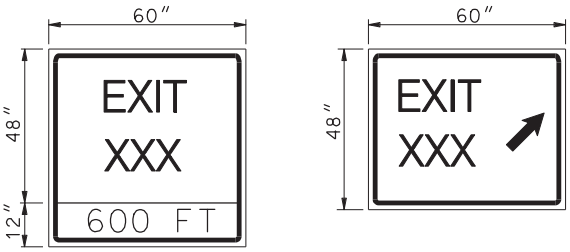


## EXIT RAMP SIGNING

BLACK/ORANGE

XXX EXIT NUMBER

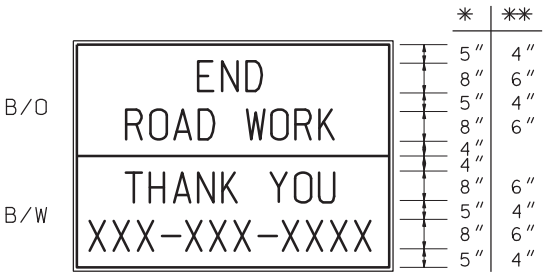


## CONSTRUCTION ZONE INFORMATION SIGN

* 84″ X 60″ FREEWAY

** 60″ X 48″ CONVENTIONAL HIGHWAYS

USE SERIES "C" STANDARD HIGHWAYS ALPHABET

XXX CONTRACTOR'S PHONE NUMBER

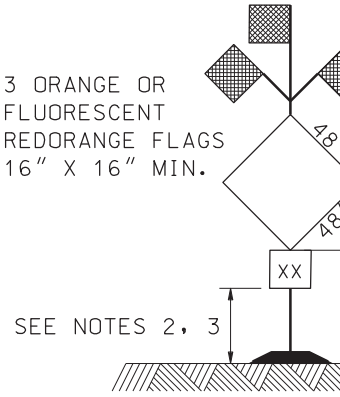


## TYP. SIGN INS
## WITH FLA

SEE NOTES 4,

DGN File: N:\Esd\Standard_Drawings\Imperial\2005Approved\Traffic Control (TC)\tc01b.dgn
25-JAN-2005

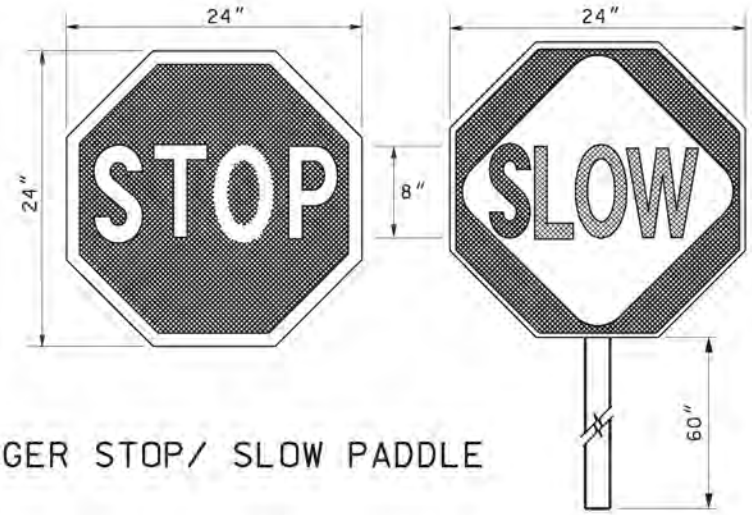


FLAGGER STOP/ SLOW PADDLE

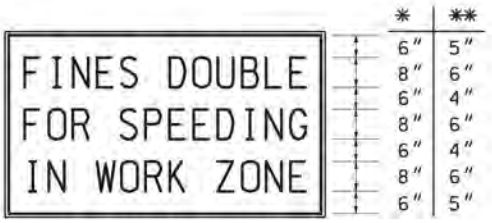


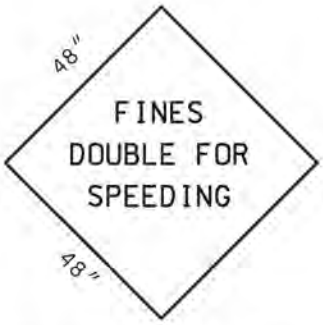


## FINES DOUBLE SIGN – LONG TERM APPLICATION

* 84" X 48" FREEWAY
** 60" X 36" CONVENTIONAL HIGHWAYS
USE SERIES "C" STANDARD HIGHWAYS ALPHABET
BLACK/ORANGE

## FINES DOUBLE SIGN – SHORT TERM APPLICATION

USE 7" SERIES "C" STANDARD HIGHWAY ALPHABET
USE ON RAMPS AND SIDE STREET APPROACHES
BLACK/ORANGE

TALLATION
AGS
5

## NOTES

1. CLOSE ROADWAYS WITH TYPE III BARRICADES. EXTEND THE BARRICADES ACROSS INTENDED ROAD CLOSURE A MINIMUM OF 3/4 OF THE ROADWAY STARTING FROM THE CENTER OF THE ROADWAY AND EXTENDING IN BOTH DIRECTIONS TOWARD THE SHOULDERS. PLACE A "ROAD CLOSED" SIGN (R11-2) OVER THE CENTER LINE AND THE APPROPRIATE "DETOUR" ARROW SIGNS (M4-10 L OR R) ON EACH SIDE OF THE "ROAD CLOSED" SIGN. DETOUR ARROWS ARE NOT REQUIRED IF DETOUR IS NOT AT ROAD CLOSURE.
2. SIGNS ON PORTABLE STANDS REQUIRE A 12 INCH MINIMUM MOUNTING HEIGHT.
3. SIGNS ON PORTABLE STANDS PLACED AMONG CHANNELIZING DEVICES REQUIRE A 36 INCH MINIMUM MOUNTING HEIGHT.
4. SIGNS USING POST TYPES P1, P2 OR P3 REQUIRE A MINIMUM 84 INCHES MOUNTING HEIGHT FROM ROADWAY SURFACE. REFER TO SN SERIES STANDARD DRAWINGS.
5. PLACE TWO ORANGE STRIPS OF REFLECTIVE SHEETING, 4 INCHES X 24 INCHES, VERTICALLY, 12 INCHES FROM THE RIGHT AND LEFT CORNERS ON THE BACK OF SIGNS USED WITH PORTABLE STANDS. USE THE SAME GRADE OF REFLECTIVE SHEETING AS USED ON THE FRONT OF THE SIGN.
6. USE SANDBAGS WITH SAND OR OTHER COMPARABLE SOFT MATERIAL AS BALLAST. DO NOT PLACE BALLAST HIGHER THAN 12 INCHES ABOVE THE ROADWAY AND DO NOT COVER ANY REFLECTIVE AREA OF RAILS OR SIGNS.
7. PLACE ADVISORY SPEED LIMIT SIGNS ONLY IN COMBINATION WITH AND BELOW A WARNING SIGN.

REVISIONS

| NO. | DATE | APPR. | REMARKS |
|---|---|---|---|
| | | | |

PORTATION
CONSTRUCTION

JAN.01,2005 DATE
JAN.01,2005 DATE

RECOMME
CHAIRMA APPROVE
DEPUTY DIRECTOR

CONSTRUCTION ZONE SIGNING

STANDARD DRAWING TITLE

STD DWG
TC 1B

# HAZARD MITIGATION

1. USE CONSTRUCTION CLEAR ZONE DISTANCE IDENTIFIED IN TABLE 1 TO MITIGATE THE FOLLOWING HAZARDS.
   HAZARDS
   A. NON-WORKING EQUIPMENT OR VEHICLES
   B. STOCKPILED MATERIAL
   C. WORKING VEHICLES AND WORKERS (NON-FLAGGERS)
   D. OTHER OBJECTS AND FEATURES (IE: BRIDGE PARAPETS, BARRIER BLUNT ENDS, POLES)
   E. VERTICAL DROP-OFF LESS THAN 48 INCHES OR SLOPES STEEPER THAN 4:1

2. MITIGATE ALL OTHER HAZARDS OR DROP-OFFS GREATER THAN 48 INCHES WITHIN AASHTO CLEAR ZONE AS APPROVED BY THE REGION TRAFFIC ENGINEER.

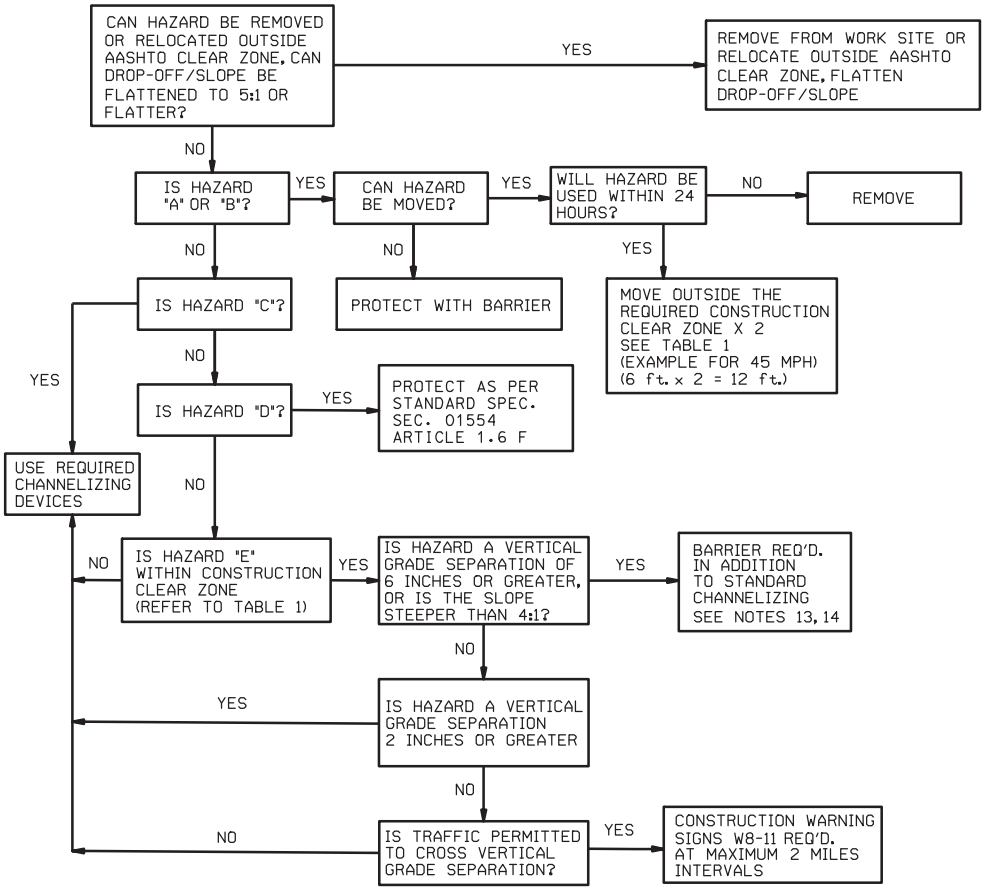


## DETAIL AA

## NOTES:

1. USE CURRENT EDITION OF UDOT STANDARDS AND MUTCD FOR TRAFFIC CONTROL.
2. SEE STD DWG TC 1A AND TC 1B FOR CONSTRUCTION ZONE SIGNING AND DEVICE REQUIREMENT.
3. COVER OR REMOVE NON-APPLICABLE SIGNING, BOTH EXISTING AND CONSTRUCTION SIGNS. REMOVE NON-APPLICABLE PAVEMENT MARKINGS.
4. REMOVE NON-APPLICABLE PORTABLE SIGNS OR MOVE BEYOND A DISTANCE TWICE THAT OF THE CONSTRUCTION CLEAR ZONE. (SEE TABLE 1 AND DETAIL AA).
5. REFER TO STANDARD SPECIFICATION 01554 FOR FLAGGING REQUIREMENT FOR OPERATING TRAFFIC SIGNALS.
6. USE A FULL LANE CLOSURE WHEN WORK ENCROACHES INTO A TRAFFIC LANE, UNLESS THE TRAFFIC LANE CAN BE RECREATED.
7. CLEAN AND RESTORE PAVEMENT MARKINGS AT THE END OF EACH DAY'S OPERATION, BOTH ON AND OFF THE PROJECT, THAT ARE OBSCURED BY WORK OPERATIONS.
8. LIMIT ADVISORY AND REGULATORY SPEED REDUCTION OF 10 MPH, WITH THE APPROVAL FROM THE ENGINEER. FOR REDUCTIONS EXCEEDING 10 MPH, OBTAIN APPROVAL FROM THE REGION TRAFFIC ENGINEER. USE SPEED REDUCTIONS ONLY DURING IMPACTED TIMES AND AREAS. RESTORE REGULATORY SPEED LIMIT AT LOCATIONS WHERE TRAFFIC IS NOT BEING IMPACTED BY CONSTRUCTION ACTIVITIES.
9. USE THE POSTED SPEED LIMIT PRIOR TO CONSTRUCTION TO COMPUTE THE SIGN SPACING, TAPER LENGTH, BUFFER ZONE, AND CONSTRUCTION CLEAR ZONE DISTANCE. USE THE POSTED SPEED LIMIT DURING CONSTRUCTION TO DETERMINE THE TANGENT SPACING FOR CHANNELIZING DEVICES.
10. USE PLASTIC DRUMS FOR LANE CLOSURE TAPER DEVICES FOR SPEEDS 50 MPH AND GREATER.
11. USE DOWNSTREAM TAPER FOR OPERATIONS LONGER THAN 3 DAYS.
12. PLACE ADVANCE WARNING ARROW PANEL IN THE FIRST 1/3 OF THE TAPER.
13. USE AN APPROVED CONSTRUCTION ZONE ATTENUATOR WITH TEMPORARY PRECAST CONCRETE BARRIER WHEN APPROACH ENDS ARE WITHIN AASHTO CLEAR ZONE. DO NOT USE A TRUCK MOUNTED ATTENUATOR FOR ANY PERIOD LONGER THAN 24 HOURS.
14. USE PROPER LENGTH OF NEED FOR TEMPORARY BARRIER AS PER THE REQUIREMENTS OF THE CURRENT EDITION OF THE ROADSIDE DESIGN GUIDE. USE POSTED SPEED LIMIT PRIOR TO THE CONSTRUCTION ZONE FOR THE DESIGN OF THE REQUIRED LENGTH OF NEED. USE TABLE 2 FOR THE CONSTRUCTION ZONE FLARE RATE REQUIREMENT FOR TEMPORARY BARRIER. APPROVAL FROM THE REGION TRAFFIC ENGINEER IS REQUIRED FOR MODIFICATION TO THE REQUIRED FLARE RATE.

**TABLE 1**
CONSTRUCTION CLEAR ZONE

| MPH | feet |
|---|---|
| 40 & LESS | 3 |
| 45 | 6 |
| 50 | 6.5 |
| 55 | 7.5 |
| 60 | 8 |
| 65 | 8.5 |
| 70 | 9 |
| 75 | 10.5 |

**TABLE 2**
CONSTRUCTION ZONE FLARE RATES
TEMPORARY BARRIER

| MPH | FLARE |
|---|---|
| ≥70 | 20:1 |
| 65 | 18:1 |
| 60 | 17:1 |
| 55 | 16:1 |
| 50 | 14:1 |
| 45 | 10:1 |
| ≤40 | 6:1 |

REVISIONS

| NO. | DATE | APPR. | REMARKS |
|---|---|---|---|

PORTATION
: CONSTRUCTION

JAN.01,2005
DATE

JAN.01,2005
DATE

RECOMME

CHAIRMA APPROVE

DEPUTY DIRECTOR

TRAFFIC CONTROL GENERAL

STANDARD DRAWING TITLE

STD DWG
TC 2A

## TAPER, BUFFER ZONE & SIGN SPACING CHART

| | POSTED SPEED MPH(S) | MINIMUM TAPER LENGTH(L) | LENGTH OF BUFFER(BZ) | MINIMUM SIGN SPACING(SS) | | | ONE LANE TWO-WAY FLAGGING |
|---|---|---|---|---|---|---|---|
| | | 12'LANE CLOSURE | DESIRABLE | A | B | C | TAPER LENGTH |
| | | feet | feet | feet | feet | feet | feet |
| NON INTER STATE | 30 AND LOWER | 180 | 100 | 100 | 100 | 100 | 50 |
| | 35 | 245 | 120 | 350 | 350 | 350 | |
| | 40 | 320 | 165 | | | | |
| | 45 | 540 | 220 | 500 | 500 | 500 | 100 |
| | 50 | 600 | 280 | | | | |
| | 55 | 660 | 335 | | | | |
| | 60 | 720 | 415 | | | | |
| | 65 | 780 | 485 | | | | |
| INTER STATE | 65 | 780 | 485 | 1000 | 1500 | 2640 | |
| | 70 | 840 | 600 | | | | |
| | 75 | 900 | 700 | | | | |

1- TAP

A) L

L=

1/

1/2

WH

W

S

2- CHAN

A) U
P

B) O

C) L
E
O

## REDUCED SPEED WORK Z

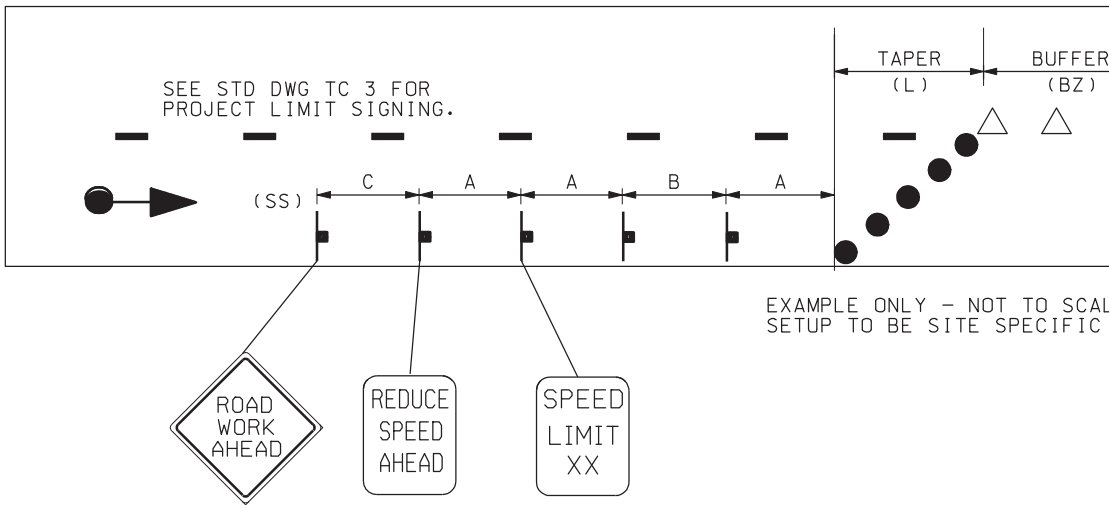


EXAMPLE ONLY - NOT TO SCAL
SETUP TO BE SITE SPECIFIC

## STANDARD WORK ZONE SIGNING

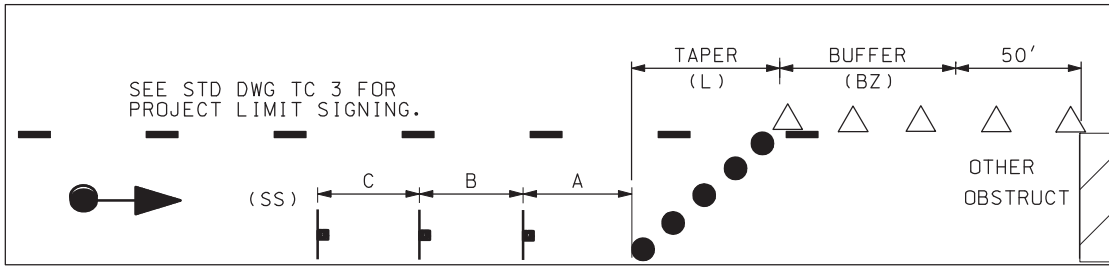


EXAMPLE ONLY - NOT TO SCALE
SETUP TO BE SITE SPECIFIC

DGN File:N:\Esd\Standard.Drawings\Imperial\2005Approved\Traffic Control (TC)\tc02b.dgn
25-JAN-2005

## ER FORMULAS

ANE TAPER LENGTH IN FEET

= SW ≥ 45 MPH  $L = \frac{WS^2}{60} \leq$ 40 MPH

'3 L = FOR SHOULDER CLOSURE TAPER

≤ L = FOR LANE SHIFT TAPER

HERE L = TAPER LENGTH

= WIDTH OF CLOSURE OR SHIFT

= POSTED SPEED

## NNELIZING DEVICES

SE A MINIMUM OF 1 DEVICE PER FOOT OF LANE CLOSURE.
LUS 1 ADDITIONAL DEVICE TO START.

N TANGENT: S X 2 = SPACING UP TO 100 FEET MAXIMUM.

ENGTH OF BUFFER ZONE (BZ) IS THE DISTANCE FROM
ND OF LANE CLOSURE TAPER TO WORK AREA, OR ANY
BSTRUCTION PRIOR TO WORK AREA.

## TRAFFIC CONTROL DEVICE LEGEND

- SIGN (PORTABLE OR FIXED)
- CHANNELIZING DEVICE (SEE STD DWG TC 1)
- PLASTIC DRUMS
- FLAGGING STATION
- ADVANCE WARNING ARROW PANEL
- BARRIER
- DIRECTION OF TRAFFIC
- TYPE III BARRICADE
- DIRECTION OF WORK VEHICLE

## ZONE SIGNING

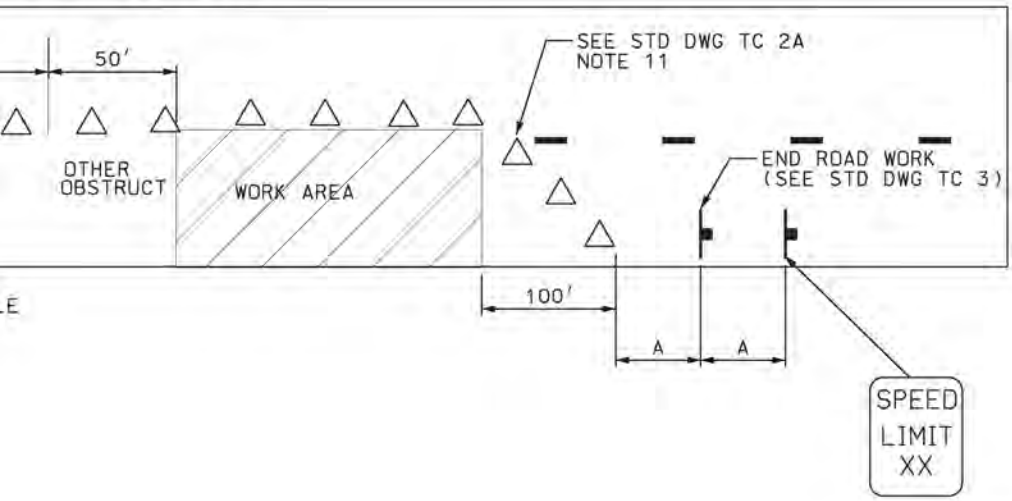


NON-REDUCED SPEED

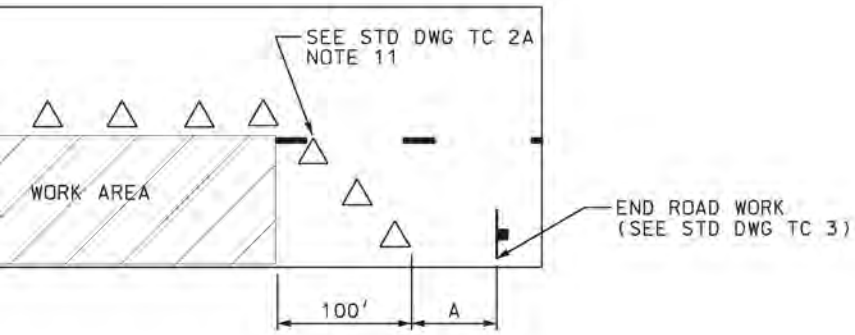


REVISIONS

| NO. | DATE | APPR. | REMARKS |
|---|---|---|---|
| | | | |

PORTATION
: CONSTRUCTION

JAN.01,2005
DATE

JAN.01,2005
DATE

RECOMME

CHAIRMA
APPROVE

DEPUTY DIRECTOR

TRAFFIC CONTROL
GENERAL

STANDARD DRAWING TITLE

STD DWG
TC 2B

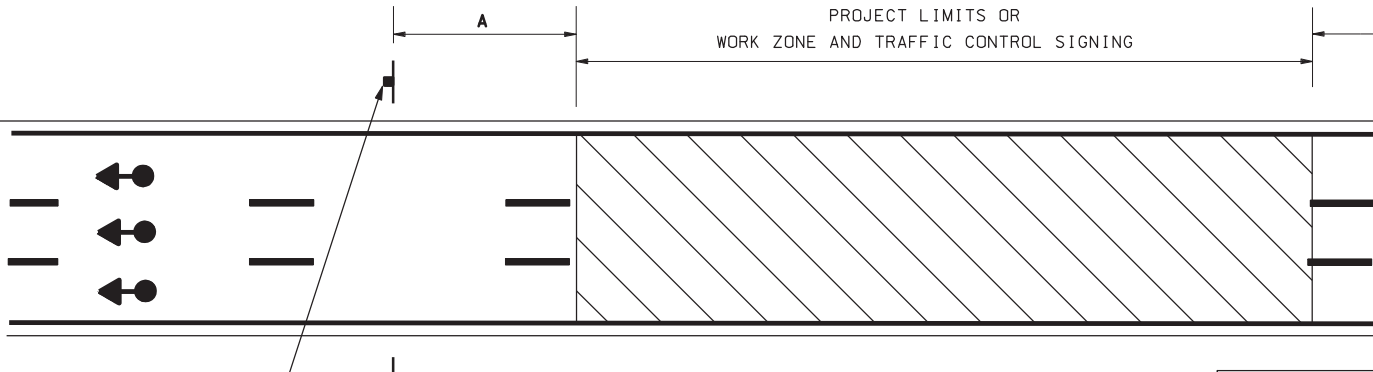


INTERSTATE & EXPRESSWAY
(DETAIL TC 3-1)

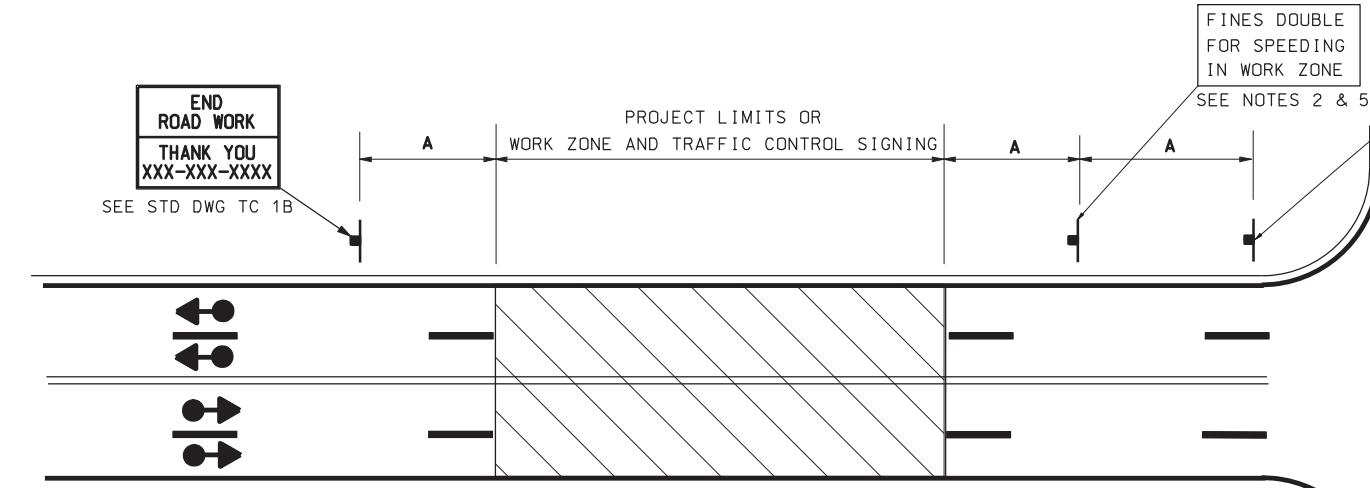


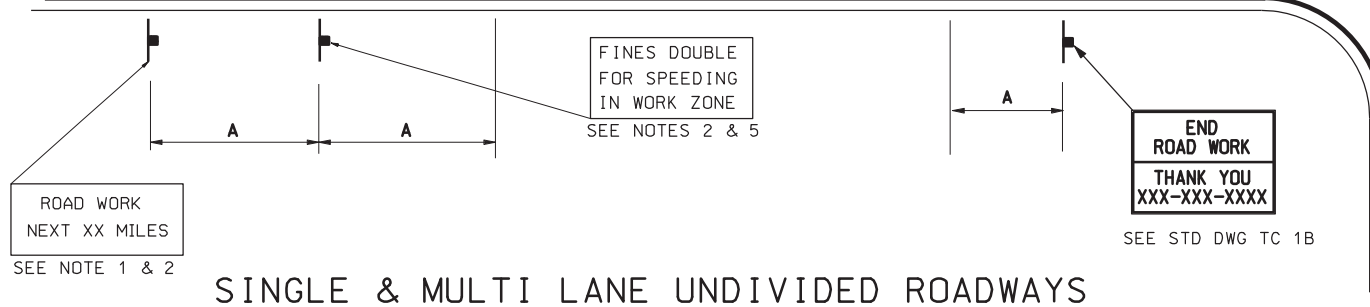


SINGLE & MULTI LANE UNDIVIDED ROADWAYS
(SIGN SEQUENCING REQUIRED IN BOTH DIRECTIONS)
(DETAIL TC 3-2)

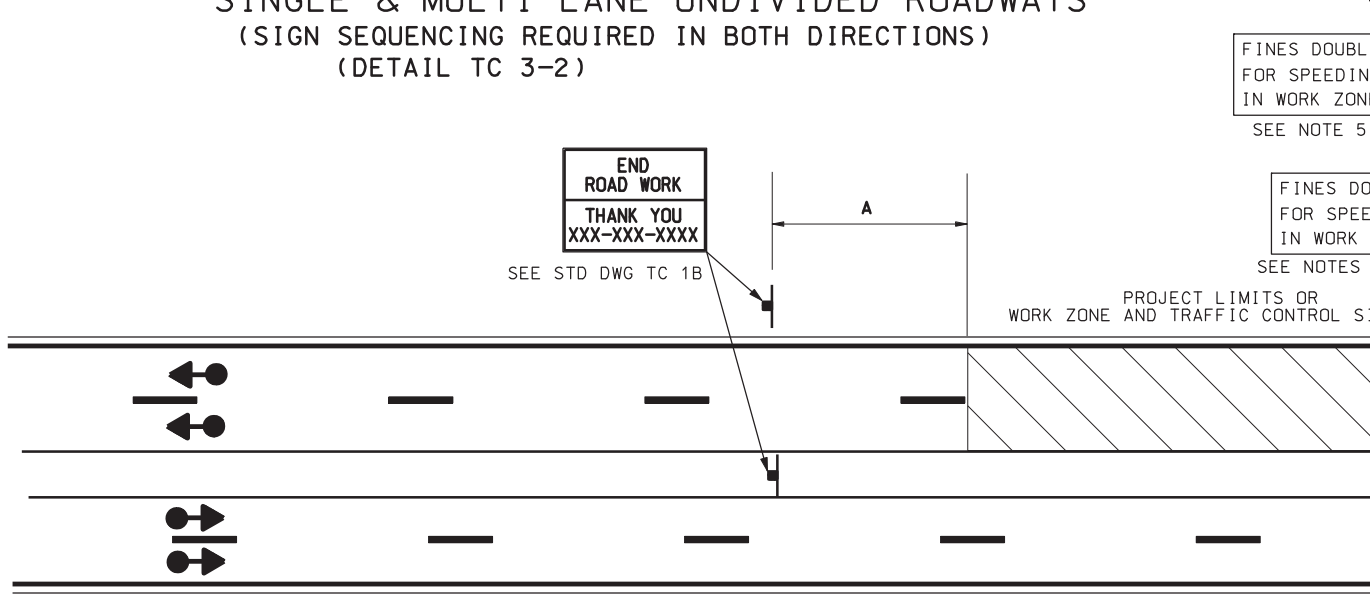


DIVIDED ROADWAYS IN URBANIZED
(DETAIL TC 3-3)

DGN File:N:\Esd\Standard.Drawings\Imperial\2005Approved\Traffic Control (TC)\tc03.dgn
25-JAN-2005

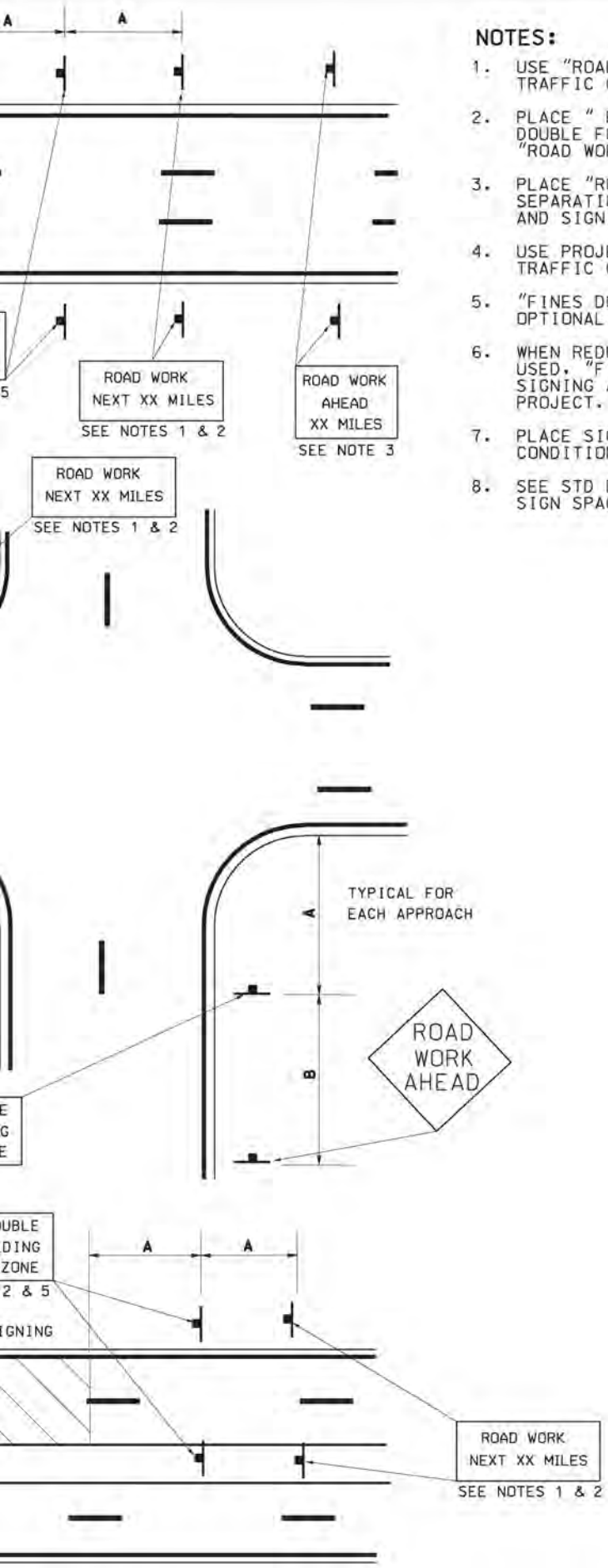


## NOTES:

1. USE "ROAD WORK NEXT __ MILES" SIGN G20-1, WHEN TRAFFIC CONTROL IS GREATER THAN 2 MILES IN LENGTH.
2. PLACE " ROAD WORK AHEAD" SIGN AHEAD OF THE "FINES DOUBLE FOR SPEEDING IN WORK ZONE" SIGN WHEN THE "ROAD WORK NEXT __ MILES" IS NOT USED.
3. PLACE "ROAD WORK AHEAD __ MILES" SIGN AT ROUTE SEPARATION POINT IF AN ALTERNATE ROUTE IS AVAILABLE AND SIGNIFICANT DELAYS ARE EXPECTED.
4. USE PROJECT LIMIT SIGNING IN BOTH DIRECTIONS IF TRAFFIC CONTROL AFFECTS TRAFFIC IN BOTH DIRECTIONS.
5. "FINES DOUBLE FOR SPEEDING IN WORK ZONE" SIGN IS OPTIONAL. SEE STD DWG TC 1B.
6. WHEN REDUCED SPEEDS AND/OR "FINES DOUBLE" OPTION IS USED, "FINES DOUBLE" SIGNING AND SPEED LIMIT SIGNING ARE REQUIRED AT ALL INTERCHANGES WITHIN THE PROJECT.
7. PLACE SIGNING ON RIGHT SHOULDER AND MEDIAN WHEN CONDITIONS PERMIT.
8. SEE STD DWG TC 2B FOR TAPER, BUFFER ZONE, AND SIGN SPACING CHART.

REVISIONS

| NO. | DATE | APPR. | REMARKS |
|---|---|---|---|
| | | | |

PORTATION
CONSTRUCTION

RECOMME JAN.01,2005 DATE
CHAIRMA APPROVE JAN.01,2005 DATE
DEPUTY DIRECTOR

TRAFFIC CONTROL
PROJECT LIMIT SIGNING

STANDARD DRAWING TITLE

STD DWG
TC 3

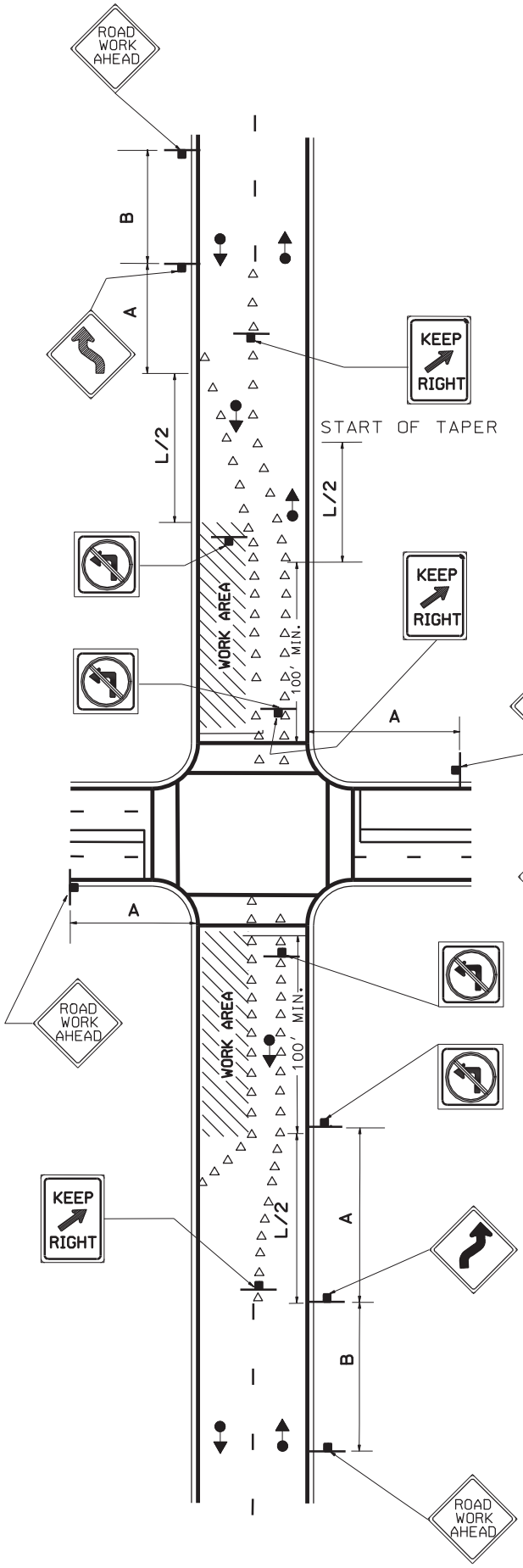


(DETAIL TC 4-1)

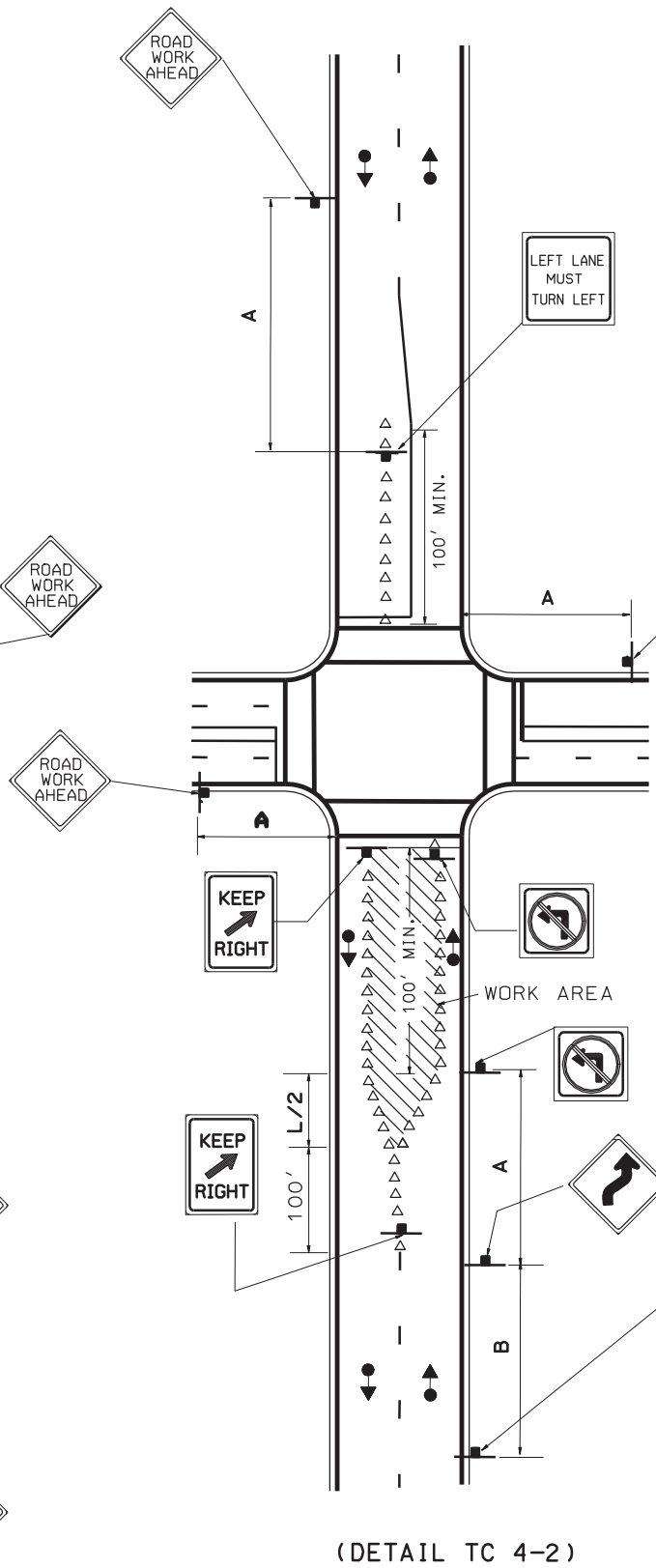


(DETAIL TC 4-2)

LANE SHIFT FOR URBAN INTERSE

DGN File: N:\Esd\Standard Drawings\Imperial\2005Approved\Traffic Control (TC)\tc04.dgn
25-JAN-2005

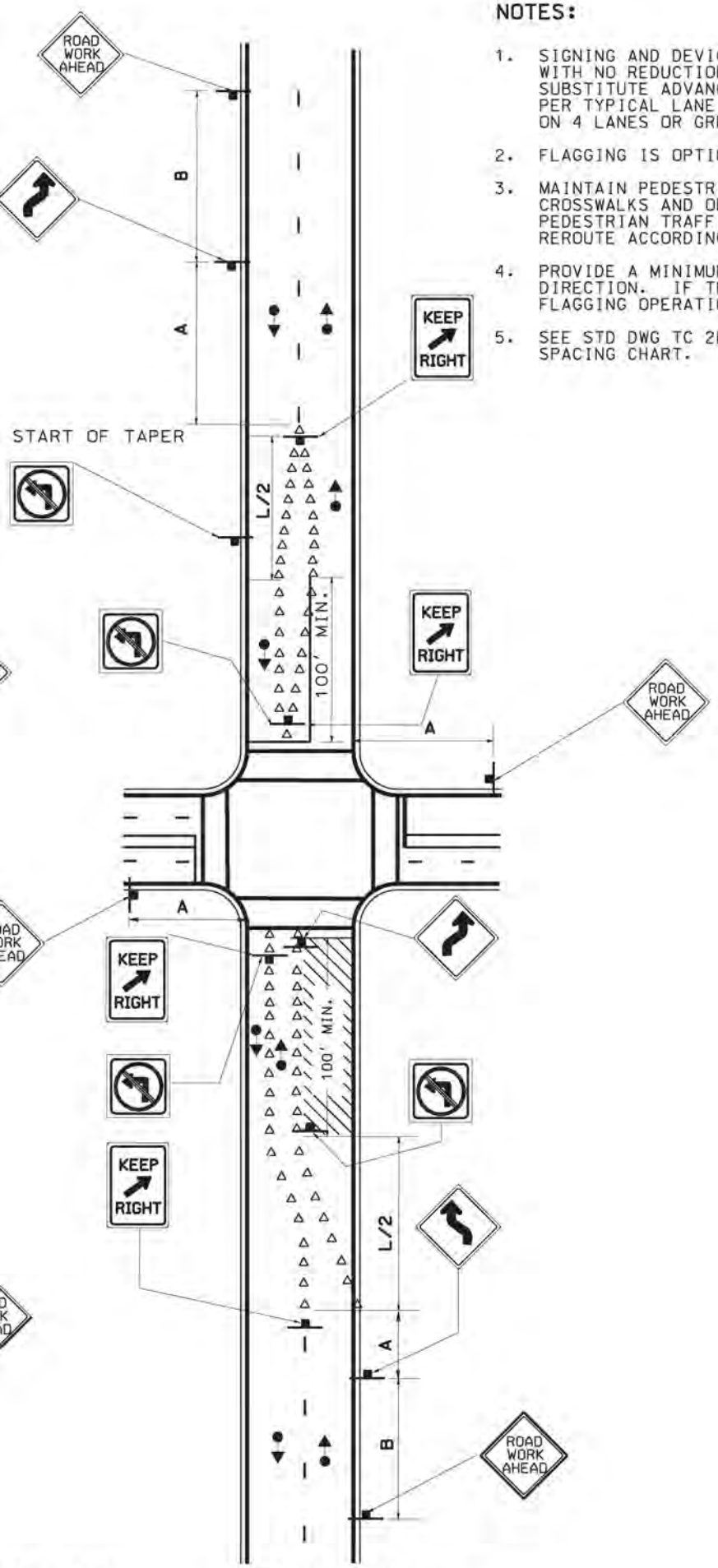


ECTIONS (DETAIL TC 4-3)

NOTES:

1. SIGNING AND DEVICES SHOWN FOR 2 LANE ROADWAY WITH NO REDUCTION IN NUMBER OF LANES. SUBSTITUTE ADVANCE SIGNING AND DEVICES AS PER TYPICAL LANE CLOSURE. FOR LANE REDUCTION ON 4 LANES OR GREATER SEE STD DWG TC 8 OR TC 5
2. FLAGGING IS OPTIONAL WITH LANE CLOSURE.
3. MAINTAIN PEDESTRIAN TRAFFIC AT EXISTING CROSSWALKS AND ON EXISTING SIDEWALKS. WHEN PEDESTRIAN TRAFFIC CANNOT BE MAINTAINED REROUTE ACCORDING TO STD DWG TC 6.
4. PROVIDE A MINIMUM 10' TRAFFIC LANE IN EACH DIRECTION. IF THIS CANNOT BE DONE USE A FLAGGING OPERATION AS PER STD DWG TC 14
5. SEE STD DWG TC 2B FOR TAPER, BUFFER, AND SIGN SPACING CHART.

REVISIONS

| NO. | DATE | APPR. | REMARKS |
|---|---|---|---|
| | | | |

PORTATION
: CONSTRUCTION

RECOMME — JAN.01,2005 DATE

CHAIRMA APPROVE — JAN.01,2005 DATE

DEPUTY DIRECTOR

TRAFFIC CONTROL
URBAN INTERSECTIONS
WITH ROADWAYS UNDER
50 MPH

STANDARD DRAWING TITLE

STD DWG
TC 4

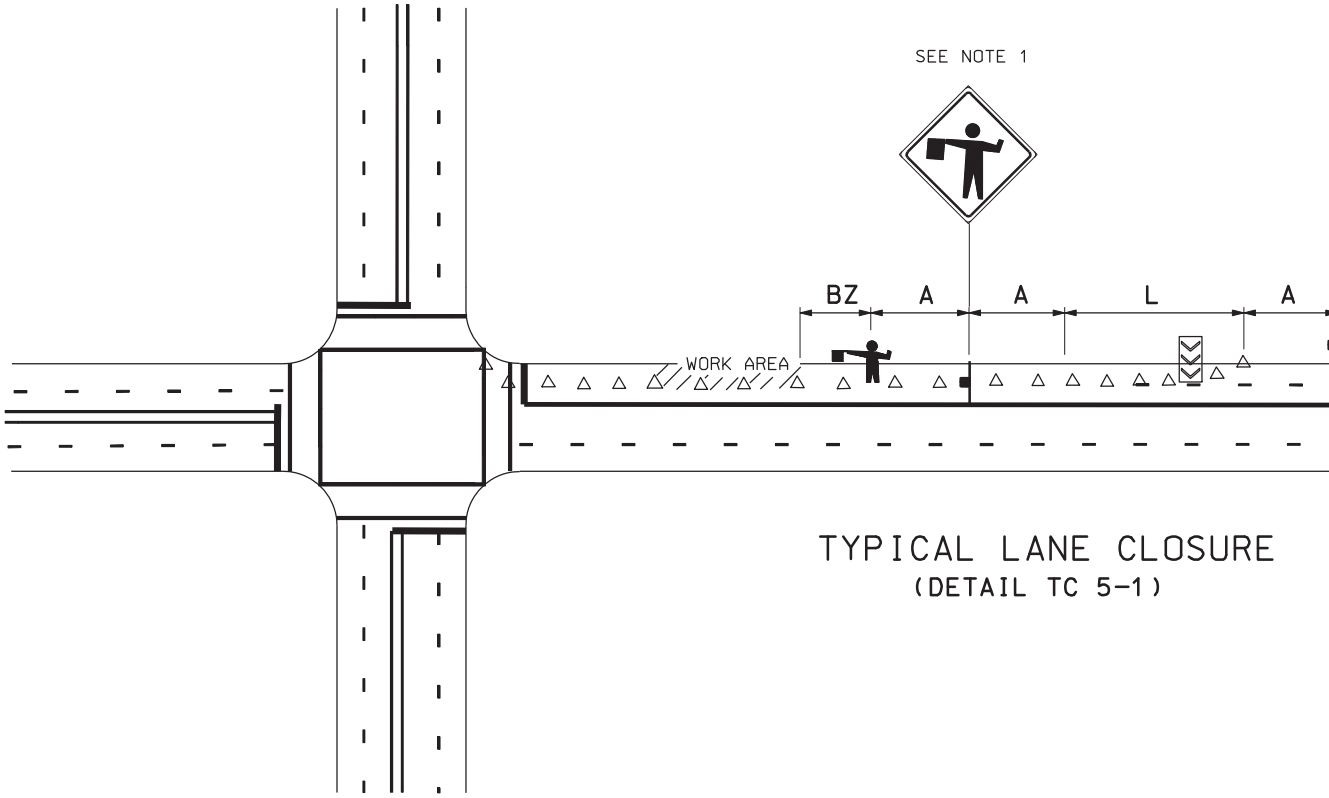


TYPICAL LANE CLOSURE
(DETAIL TC 5-1)

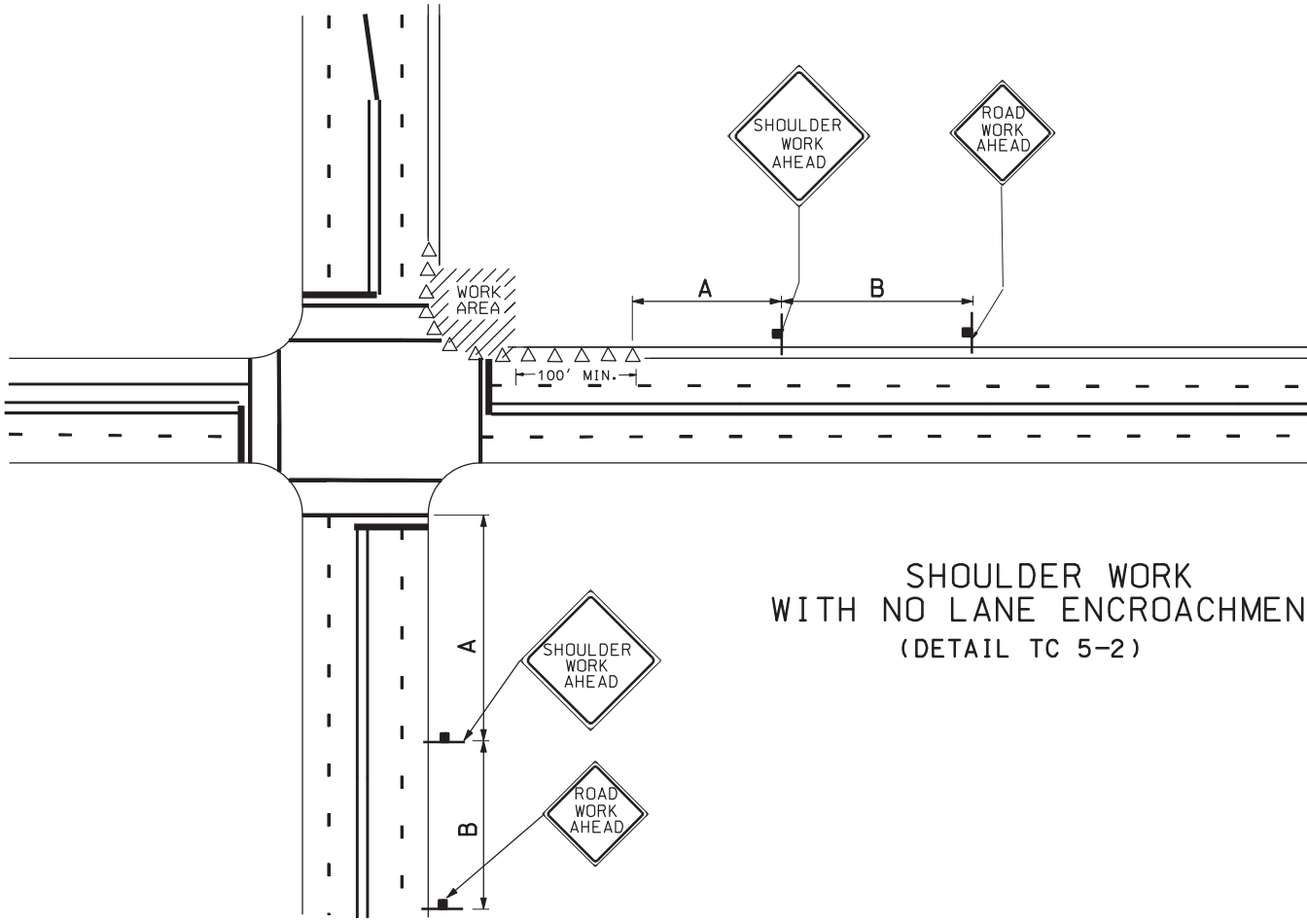


SHOULDER WORK
WITH NO LANE ENCROACHMEN
(DETAIL TC 5-2)

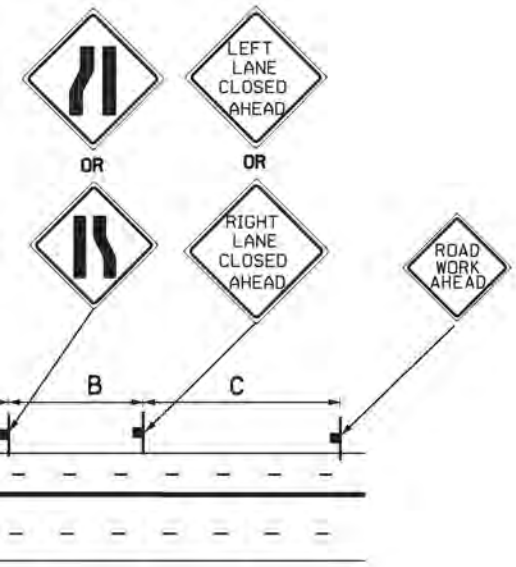


## NOTES:

1. FLAGGING IS OPTIONAL WITH LANE CLOSURE.
2. MAINTAIN PEDESTRIAN TRAFFIC AT EXISTING CROSSWALKS AND ON EXISTING SIDEWALKS. WHEN PEDESTRIAN TRAFFIC CANNOT BE MAINTAINED REROUTE ACCORDING TO STD DWG TC 6.
3. PROVIDE A MINIMUM 10' TRAFFIC LANE IN EACH DIRECTION. IF THIS CANNOT BE DONE USE A FLAGGING OPERATION AS PER STD DWG TC 14.
4. SEE STD DWG TC 2B FOR TAPER, BUFFER, AND SIGN SPACING CHART.

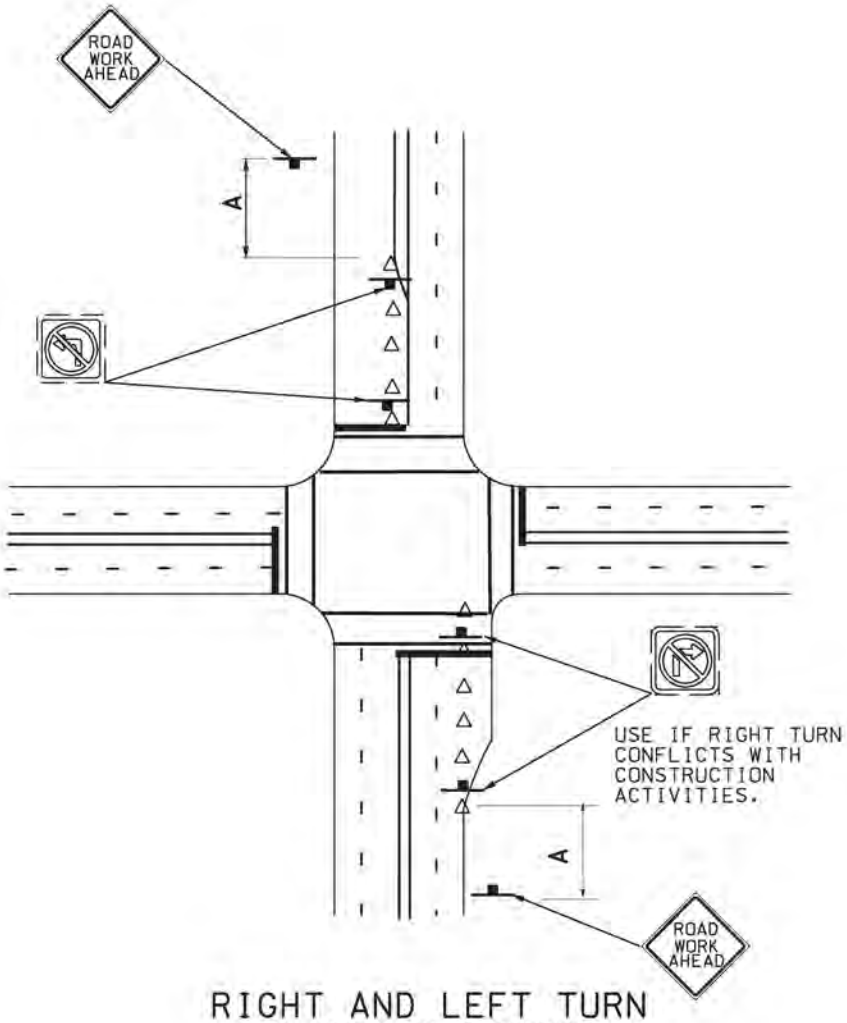


RIGHT AND LEFT TURN LANES CLOSURE
(DETAIL TC 5-3)

| REVISIONS | | | |
|---|---|---|---|
| NO. | DATE | APPR. | REMARKS |

PORTATION
: CONSTRUCTION

RECOMME — JAN.01,2005 DATE
CHAIRMA APPROVE — JAN.01,2005 DATE
DEPUTY DIRECTOR

TRAFFIC CONTROL
URBAN INTERSECTIONS
WITH ROADWAYS UNDER
50 MPH

STANDARD DRAWING TITLE

STD DWG
TC 5

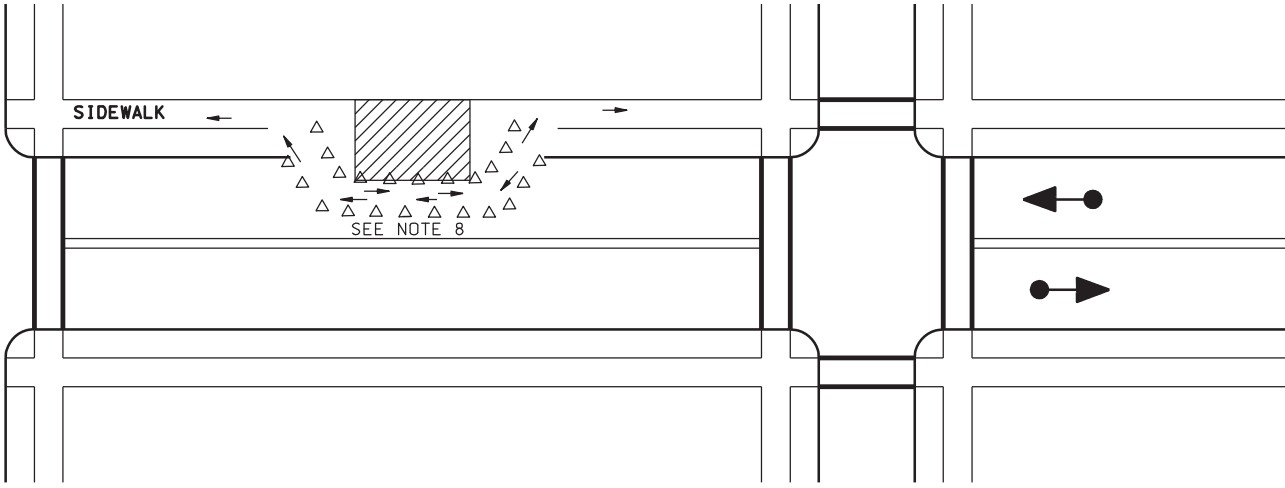


TEMPORARY WALKWAY
(DETAIL TC 6-1)
SEE NOTE 1

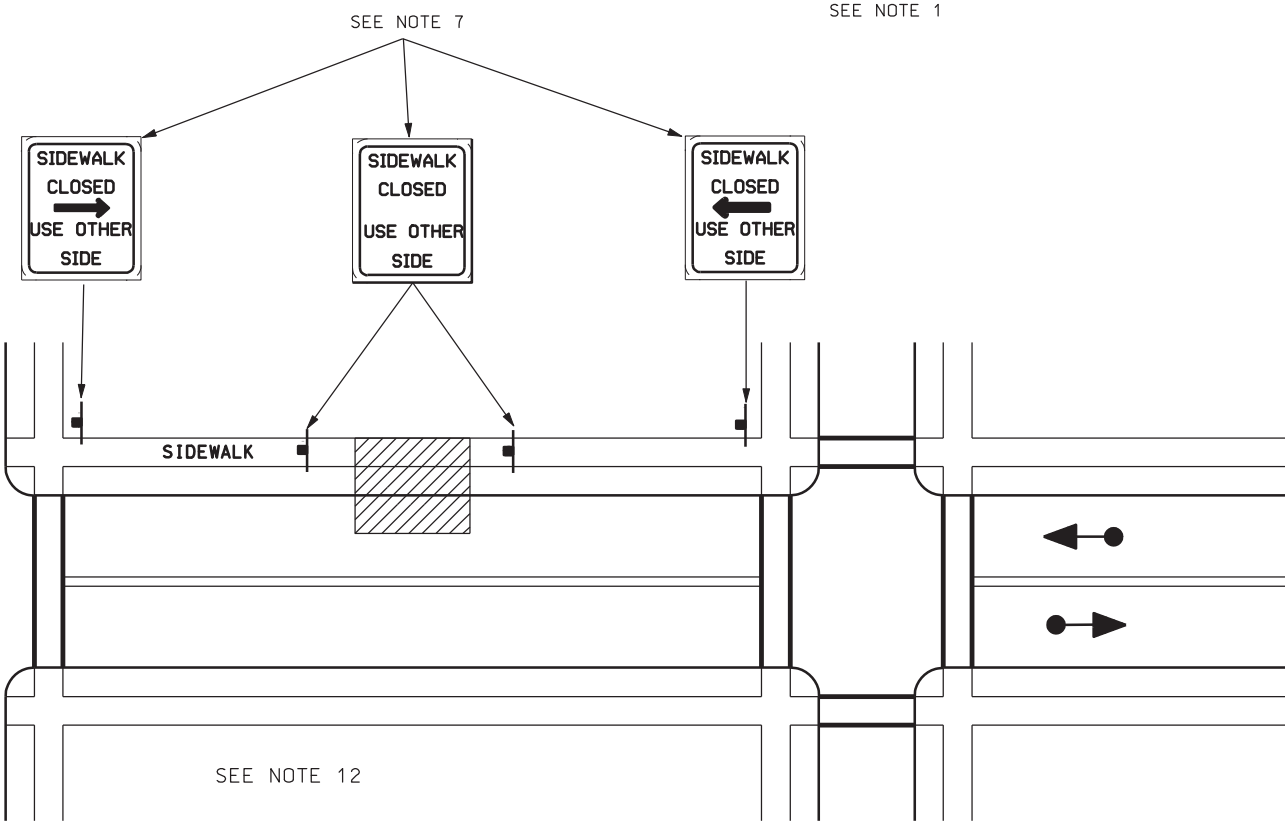


ALTERNATE ROUTE
(DETAIL TC 6-2)
SEE NOTE 1

DGN File:N:\Esd\Standard.Drawings\Imperial\2005Approved\Traffic Control (TC)\tc06.dgn
25-JAN-2005

## NOTES:

1. ONLY THE TRAFFIC CONTROL DEVICES CONTROLLING PEDESTRIAN FLOWS ARE SHOWN. OTHER DEVICES ARE NEEDED TO CONTROL TRAFFIC ON THE STREET. USE LANE CLOSURE SIGNING OR ROAD NARROWS SIGNS, AS NEEDED.
2. PROVIDE A TEMPORARY WALKWAY AROUND CONSTRUCTION AREA IF WALKWAY IS CLOSED TO PEDESTRIANS. IF WALKWAY CANNOT BE PROVIDED DIRECT PEDESTRIANS TO ALTERNATE ROUTES. (SEE DETAIL TC 6-1)
3. CONSTRUCT WALKWAY A MINIMUM OF 48" WIDE AND COVER WHEN POTENTIAL OF FALLING MATERIAL EXIST.
4. CONSTRUCT WALKWAY WITH A WOOD FLOOR OR PAVED SURFACE SO THAT IT IS TRAVERSABLE BY A WHEELCHAIR.
5. WHEN SIDEWALKS EXIST ON BOTH SIDES OF STREET COMPLETE WORK ON ONE SIDE AND REOPEN PRIOR TO STARTING WORK ON THE OTHER SIDE.
6. MOUNT SIGNS 6' MINIMUM HEIGHT.
7. USE A SIGN 24" X 36" MINIMUM, SIGN LEGEND TO BE 4" MINIMUM, SERIES "C" WITH AN ARROW 4" X 12".
8. USE CHANNELIZING DEVICES SPACED 10' ON CENTER AND CONNECTED TO EACH OTHER WITH AN ORANGE, RED, OR YELLOW POLYVINYL RIBBON OR STREAMER 4" OR GREATER IN WIDTH.
9. USE A 20' CORNER RADIUS TO DEVELOP A TEMPORARY WALKWAY AROUND A CORNER.
10. DIRECT PEDESTRIANS TO AN INTERSECTION OR MARKED CROSSWALK AS AN ALTERNATE ROUTE WHEN POSSIBLE.
11. CONSULT REGION TRAFFIC ENGINEER WHEN SCHOOL ROUTING PLANS ARE AFFECTED.
12. DO NOT DIRECT PEDESTRIANS TO OPPOSITE SIDE IF SIDEWALK DOES NOT EXIST.

REVISIONS

| NO. | DATE | APPR. | REMARKS |
|---|---|---|---|
| | | | |

PORTATION
CONSTRUCTION

RECOMME — JAN.01,2005 DATE

CHAIRMA APPROVE — JAN.01,2005 DATE

DEPUTY DIRECTOR

STANDARD DRAWING TITLE

TRAFFIC CONTROL
PEDESTRIAN ROUTING

STD DWG
TC 6

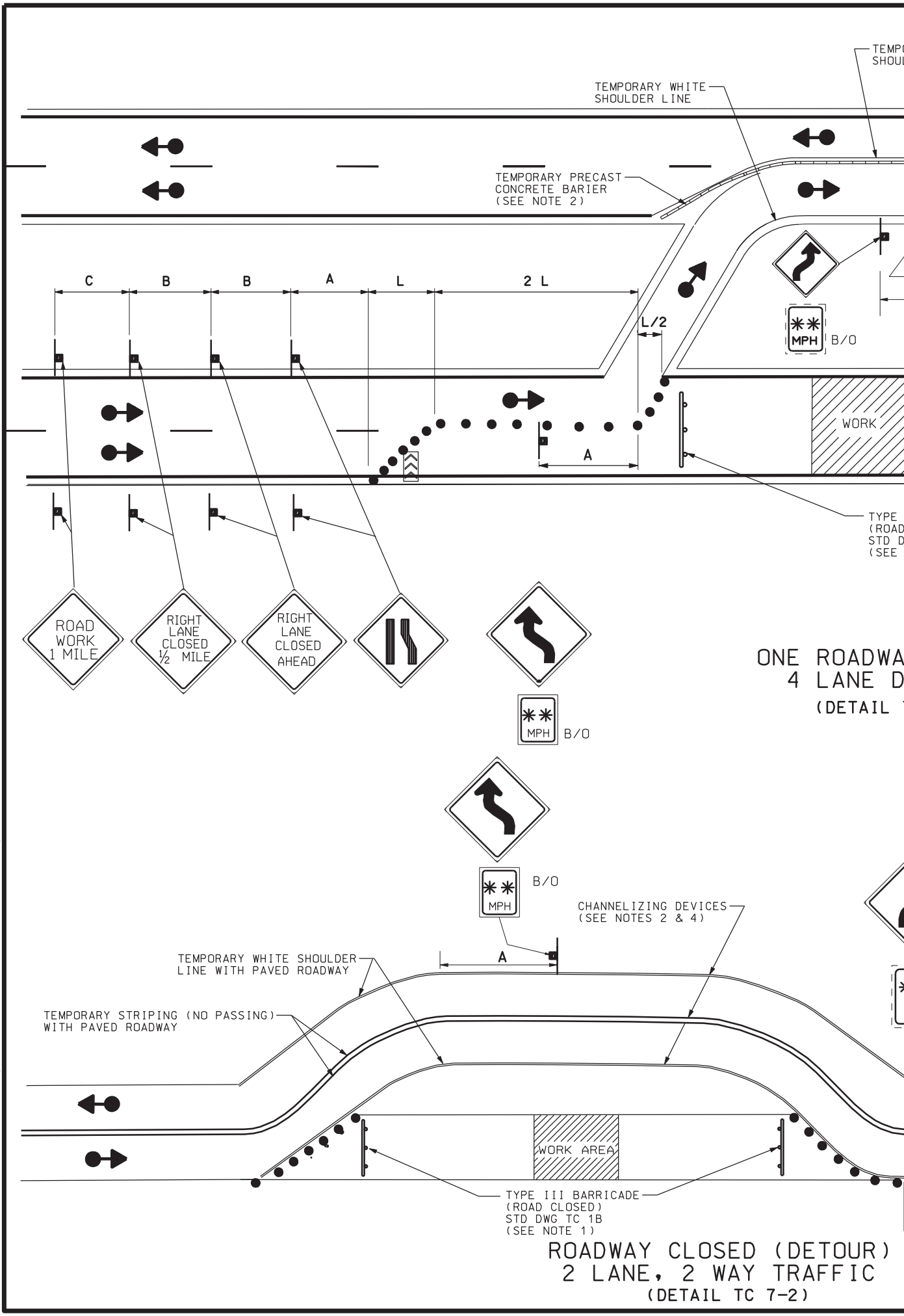


DGN File: N:\Esd\Standard Drawings\Imperial\2005Approved\Traffic Control (TC)\tc07.dgn

25-JAN-2005

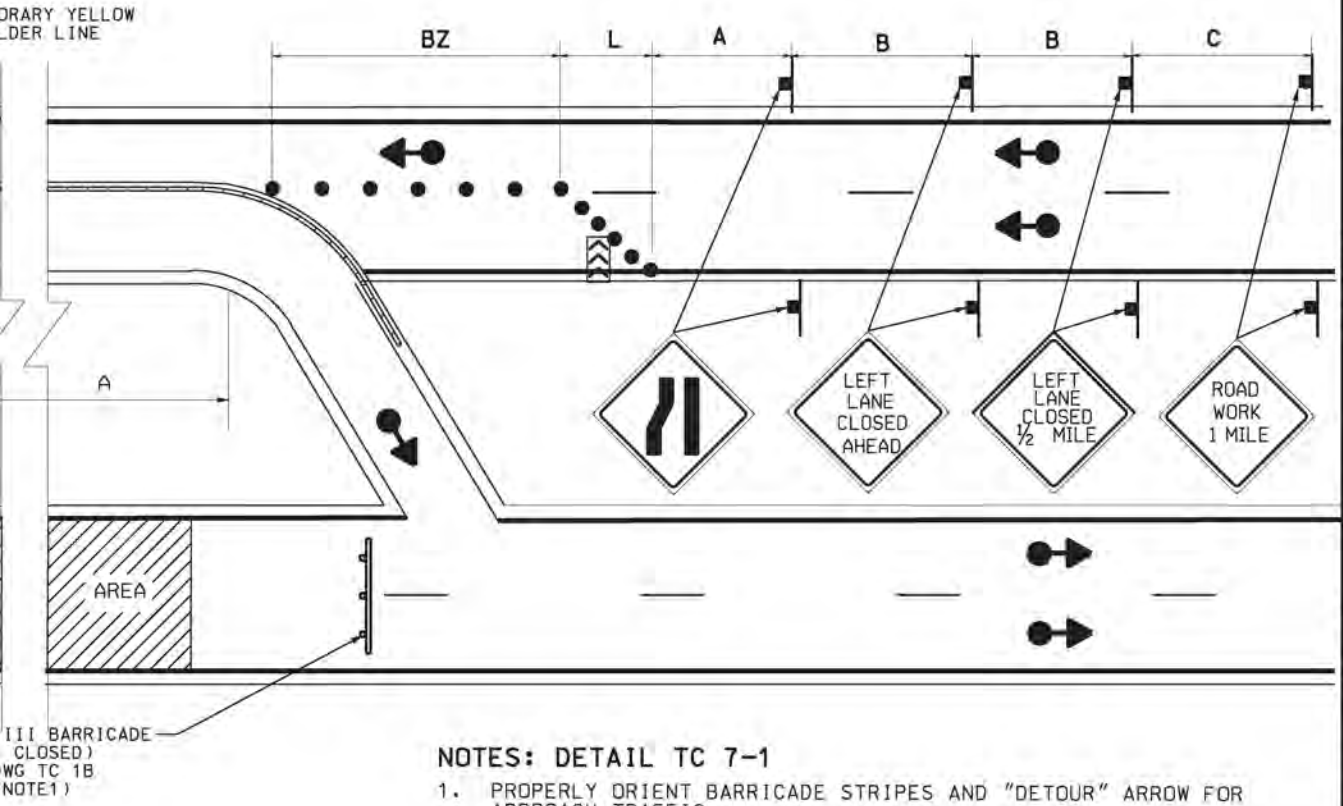


## NOTES: DETAIL TC 7-1

1. PROPERLY ORIENT BARRICADE STRIPES AND "DETOUR" ARROW FOR APPROACH TRAFFIC.
2. SEE STD DWG TC 2A GENERAL NOTES 13 & 14 FOR TEMPORARY PRECAST BARRIER REQUIREMENTS.
3. SEE STD DWG TC 2B FOR TAPER, BUFFER, AND SIGN SPACING CHART.

## NOTES: DETAIL TC 7-2

1. PROPERLY ORIENT BARRICADE STRIPES AND "DETOUR" ARROW FOR APPROACH TRAFFIC.
2. USE CHANNELIZING DEVICES ON UNPAVED DETOUR SURFACES.
3. WHEN GRADING IS REQUIRED THE ENGINEER HAS THE OPTION OF ELIMINATING EITHER THE CENTER CHANNELIZING DEVICES OR THE SHOULDER CHANNELIZING DEVICES.
4. PLACE A WARNING SIGN AS SHOWN IN DETAIL WHEN CENTER LINE IS ELIMINATED.
5. SEE STD DWG TC 2B FOR TAPER, BUFFER, AND SIGN SPACING CHART.

Y CLOSED
IVIDED
TC 7-1)

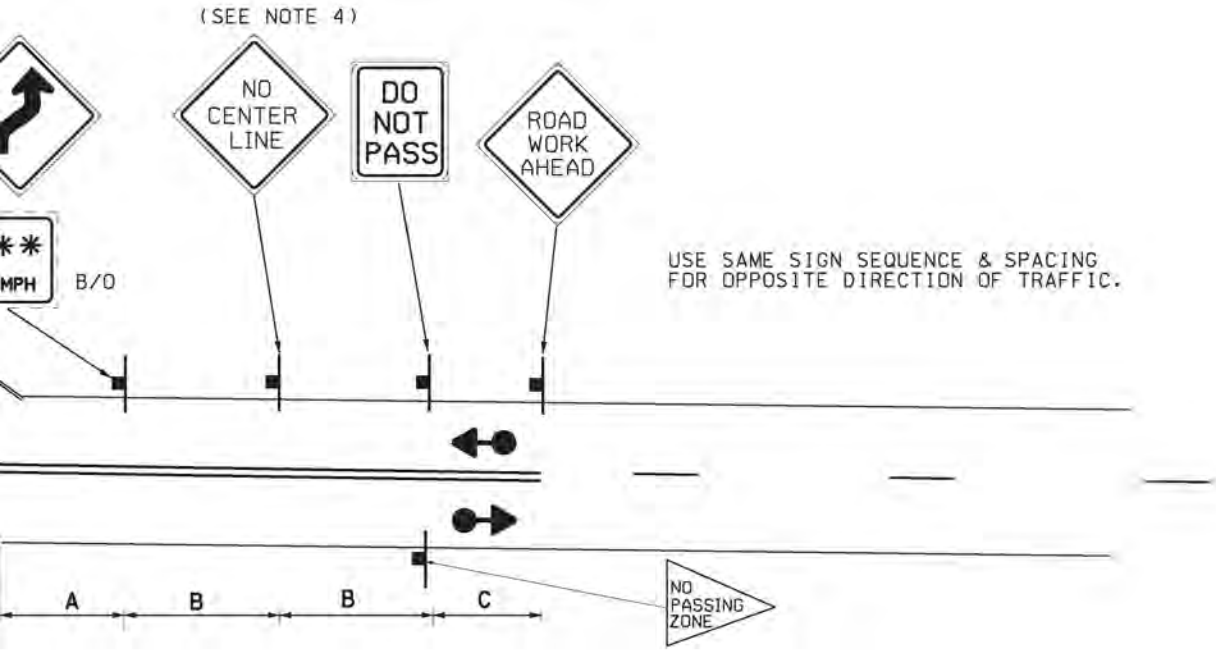


USE SAME SIGN SEQUENCE & SPACING FOR OPPOSITE DIRECTION OF TRAFFIC.

| NO. | DATE | APPR. | REMARKS |
|---|---|---|---|
| | | | |

REVISIONS

PORTATION
CONSTRUCTION

JAN.01,2005 DATE
JAN.01,2005 DATE

RECOMME
CHAIRMA APPROVE
DEPUTY DIRECTOR

TRAFFIC CONTROL
ROAD CLOSED, DETOUR

STANDARD DRAWING TITLE

STD DWG
TC 7

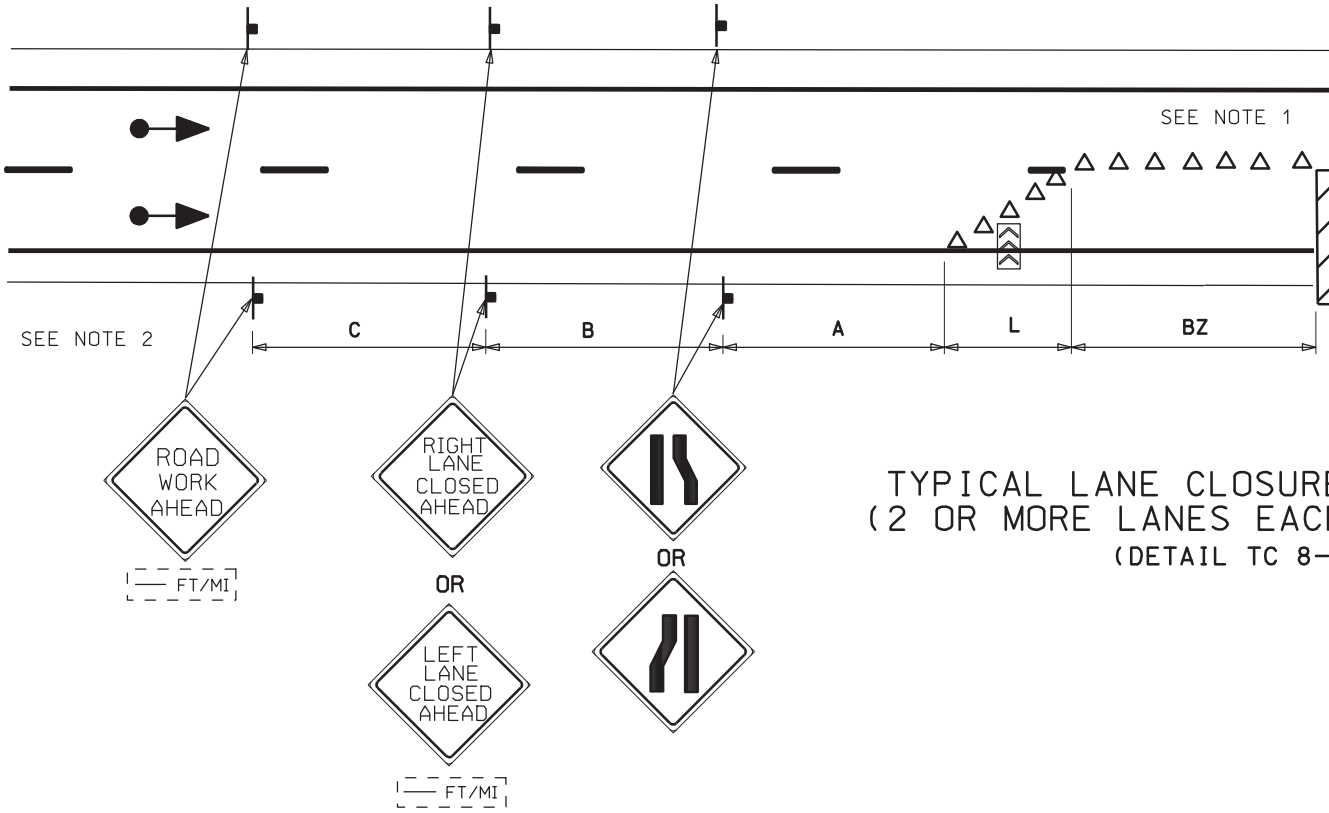


TYPICAL LANE CLOSURE
(2 OR MORE LANES EACH
(DETAIL TC 8-

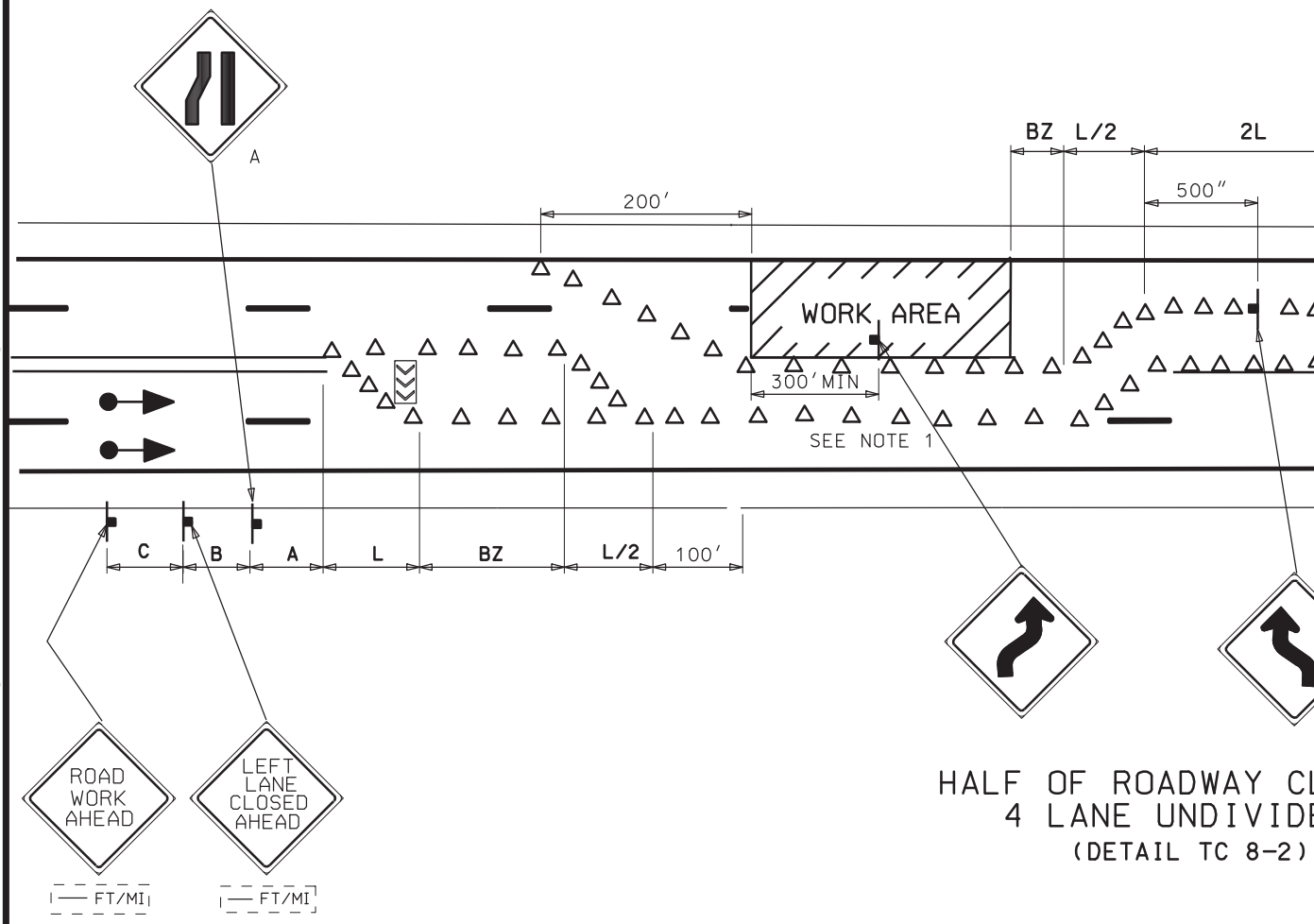


HALF OF ROADWAY CL
4 LANE UNDIVIDE
(DETAIL TC 8-2)

DGN File: N:\Esd\Standard Drawings\Imperial\2005Approved\Traffic Control (TC)\tc08.dgn

25-JAN-2005

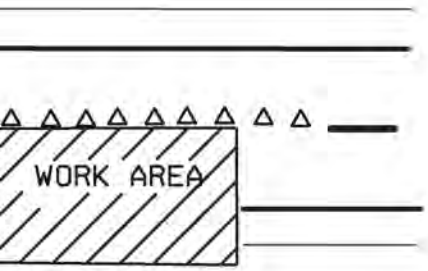


## NOTES: DETAIL TC 8-1

1. USE PLASTIC DRUMS FOR ALL CHANNELIZING DEVICES FOR SPEEDS 50 MPH AND GREATER.
2. PLACE SIGNS IN MEDIAN/LEFT SHOULDER WHEN CONDITIONS PERMIT.
3. SEE STD DWG TC 2B FOR TAPER, BUFFER ZONE, AND SIGN SPACING CHART.

E MULTILANE
H DIRECTION)
1)

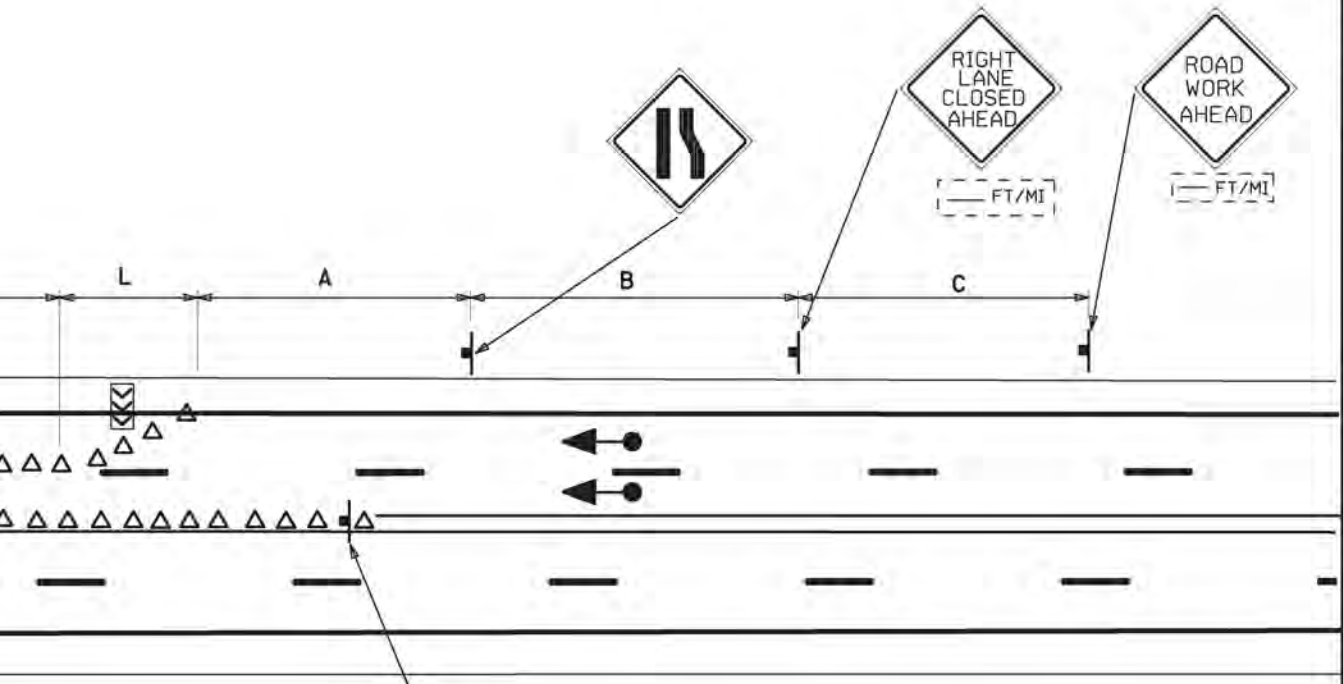

LOSED
ED

## NOTES: DETAIL TC 8-1

1. USE PLASTIC DRUMS FOR ALL CHANNELIZING DEVICES FOR SPEEDS 50 MPH AND GREATER.
2. SEE STD DWG TC 2B FOR TAPER, BUFFER ZONE, AND SIGN SPACING CHART.

REVISIONS

| NO. | DATE | APPR. | REMARKS |
|---|---|---|---|
| | | | |

PORTATION
: CONSTRUCTION

JAN.01,2005
DATE

JAN.01,2005
DATE

RECOMME

CHAIRMA
APPROVE

DEPUTY DIRECTOR

STANDARD DRAWING TITLE

TRAFFIC CONTROL
LANE CLOSURE

STD DWG

TC 8

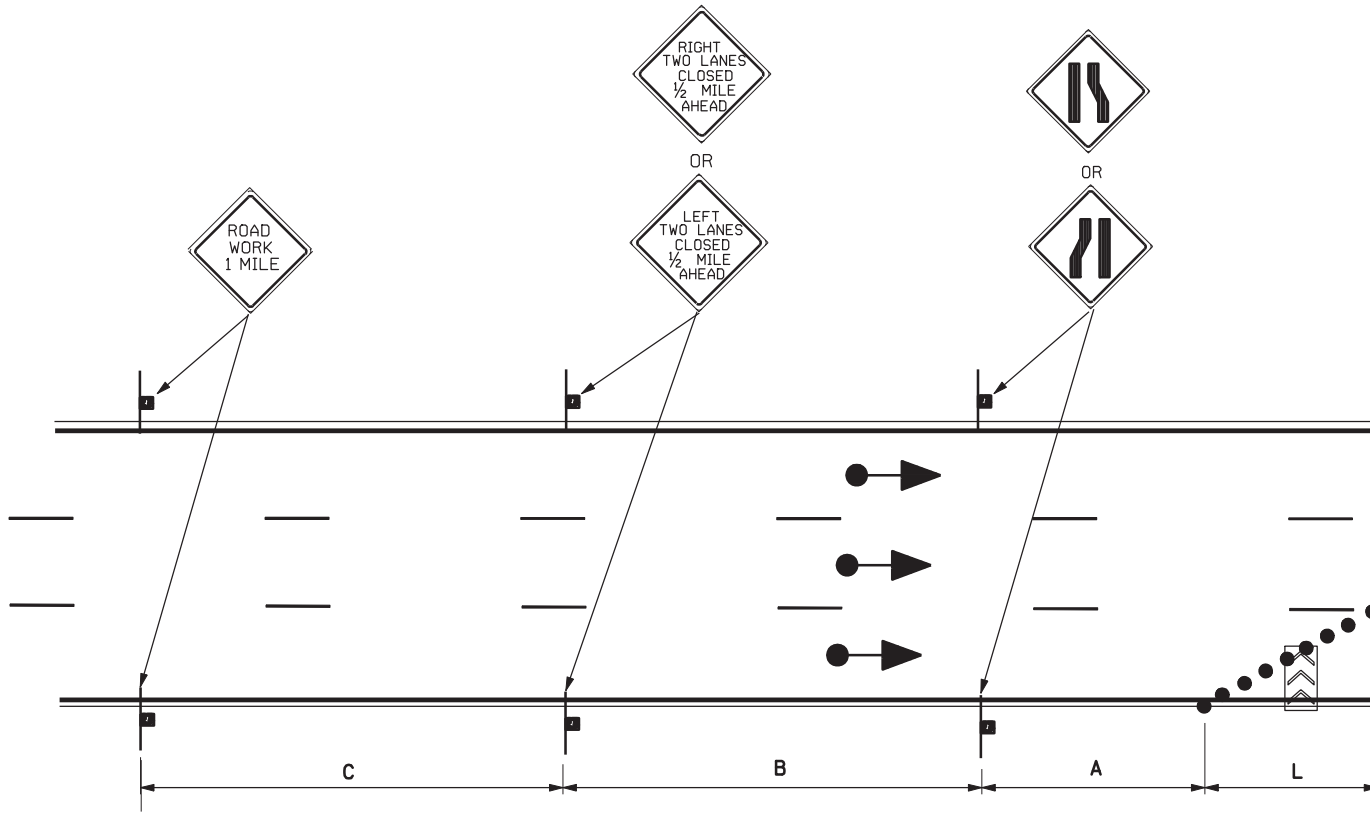


TWO LANES
(DETAIL TC 9-

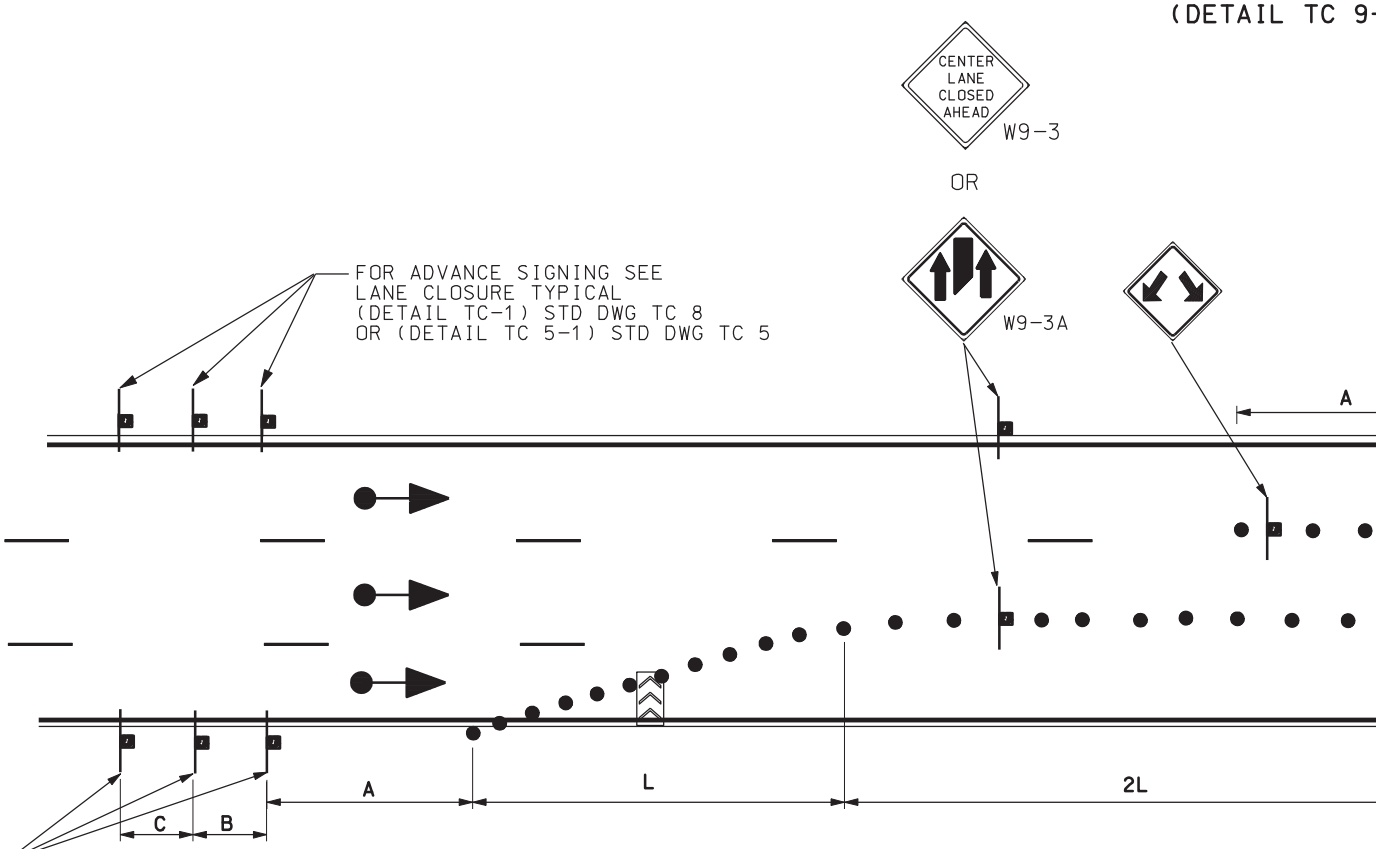


CENTER LAN
(DETAIL T

DGN File:N:\Esd\Standard.Drawings\Imperial\2005Approved\Traffic Control (TC)\tc09.dgn
25-JAN-2005

**NOTE:**

1. SEE STD DWG TC 2B FOR TAPER, BUFFER, AND SIGN SPACING CHART.

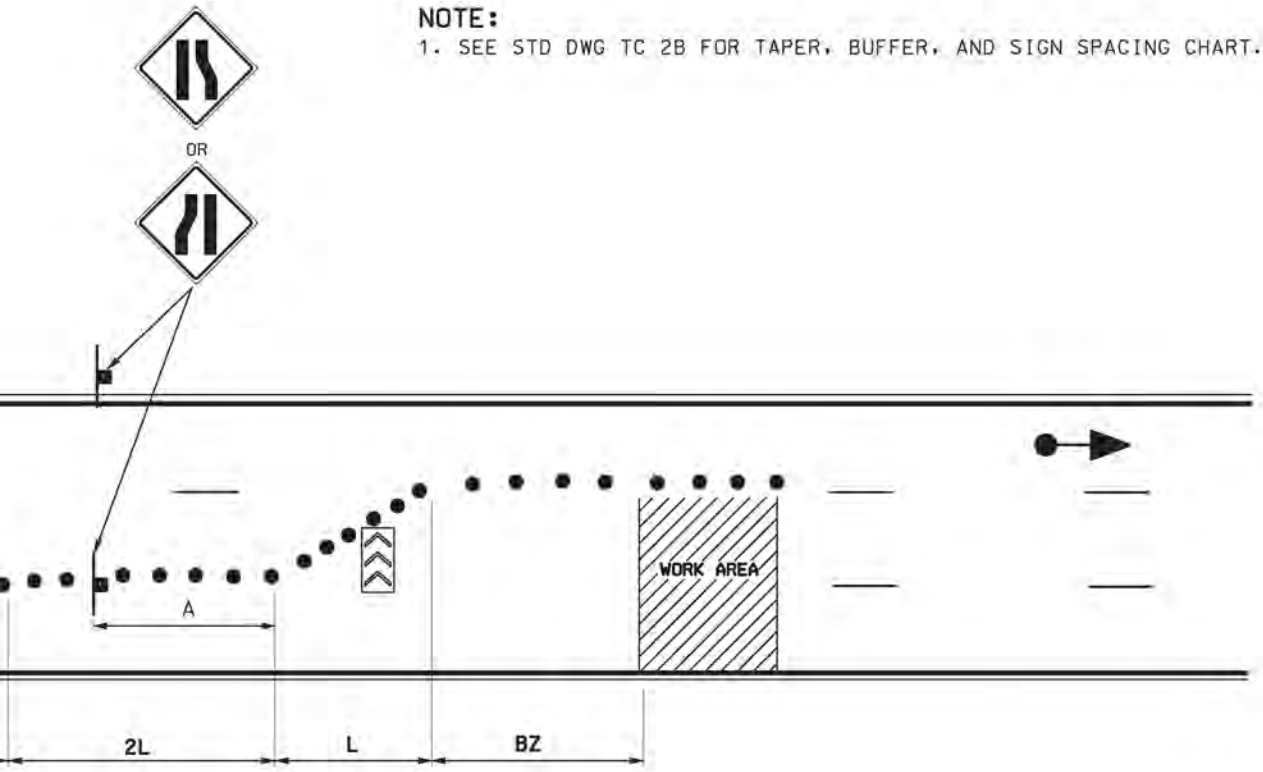


CLOSURE
-1)

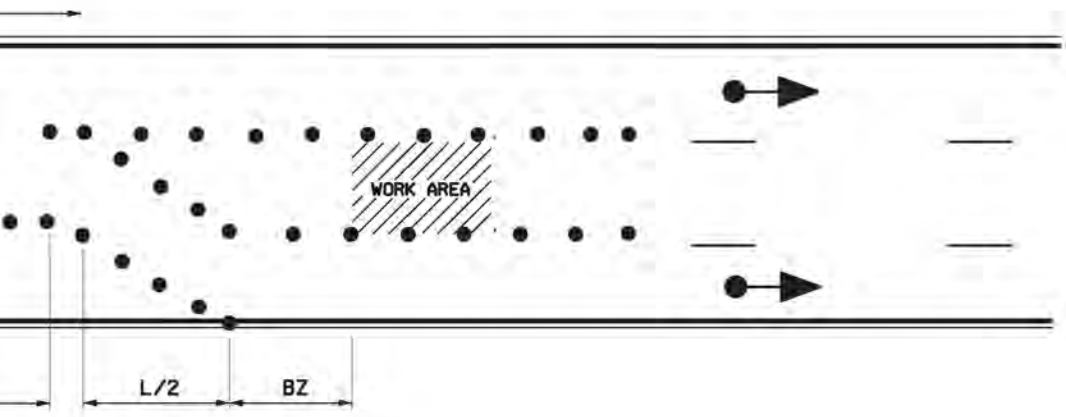


NE CLOSURE
TC 9-2)

REVISIONS

| NO. | DATE | APPR. | REMARKS |
|---|---|---|---|
| | | | |

PORTATION
CONSTRUCTION

RECOMME — JAN.01,2005 DATE

CHAIRMA APPROVE — JAN.01,2005 DATE

DEPUTY DIRECTOR

TRAFFIC CONTROL
MULTILANE CLOSURE

STANDARD DRAWING TITLE

STD DWG
TC 9

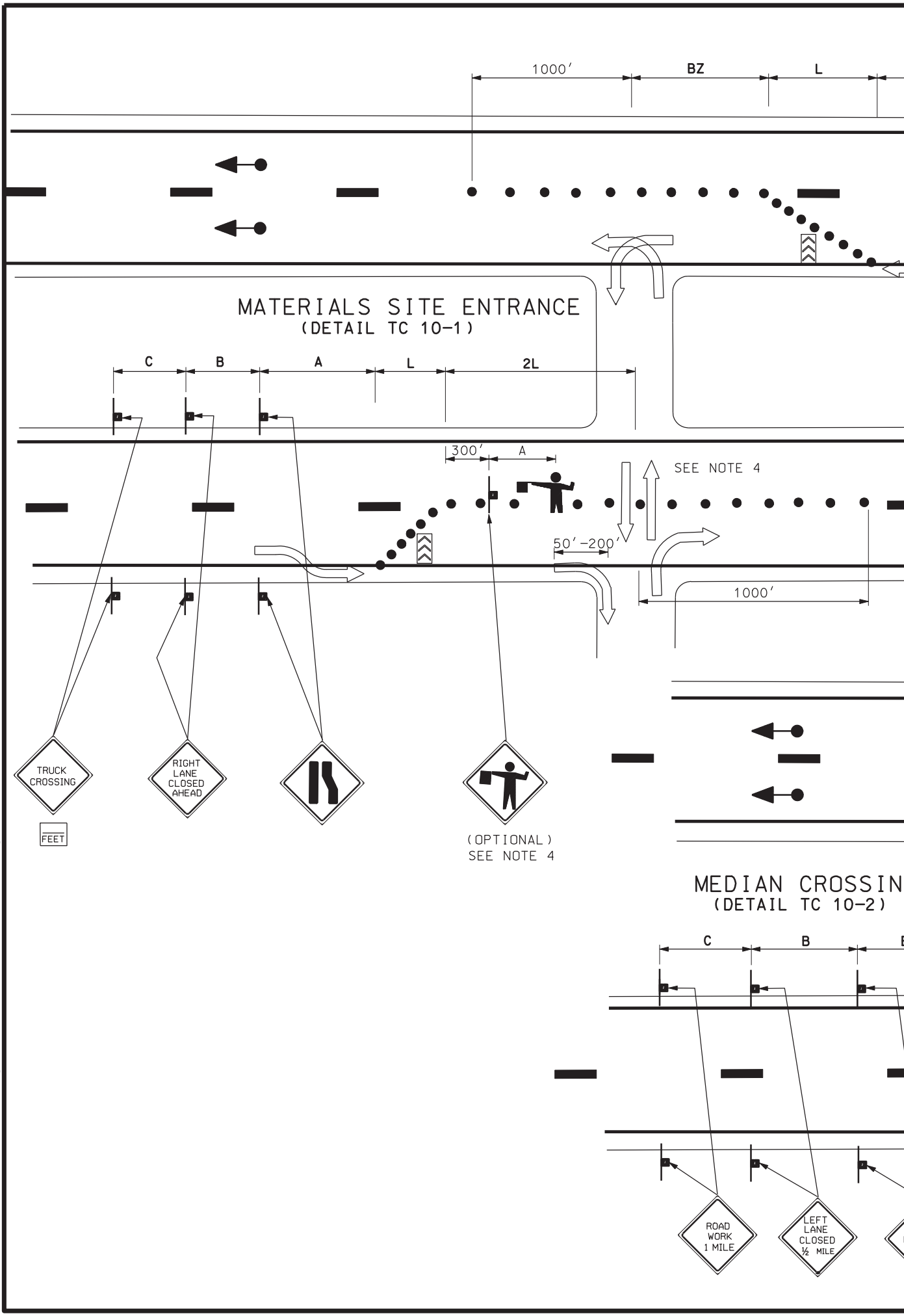


DGN File: N:\Esd\Standard Drawings\Imperial\2005Approved\Traffic Control (TC)\tc10.dgn

25-JAN-2005

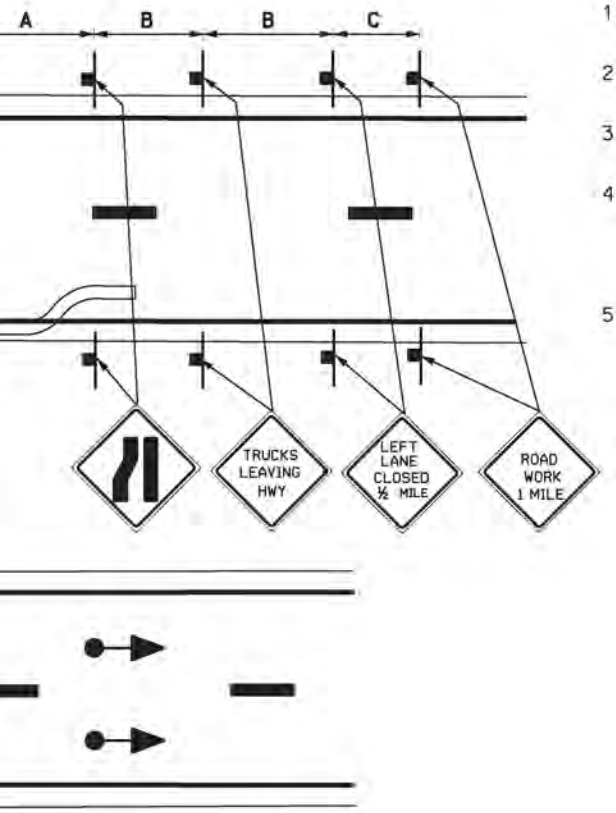


## NOTES:

1. THREE MILES OR GREATER IS REQUIRED BETWEEN TEMPORARY MEDIAN CROSSOVERS OR TURNAROUNDS.
2. DO NOT USE A CROSSOVER OR TURNAROUND WHEN AN INTERCHANGE IS WITHIN 4 MILES OF THE PROJECT.
3. REGION TRAFFIC ENGINEER APPROVES ANY EXCEPTION TO NOTE 2.
4. CONSTRUCTION TRAFFIC CROSSING THE ACTIVE LANES HAS THE RESPONSIBILITY TO STOP OR YIELD TO THROUGH TRAFFIC. USE OF A FLAGGER IS PERMITTED IF SIGHT DISTANCE IS INADEQUATE FOR CROSSING TRAFFIC TO PROCEED SAFELY.
5. SEE STD DWG TC 2B FOR TAPER, BUFFER ZONE, AND SIGN SPACING CHART.

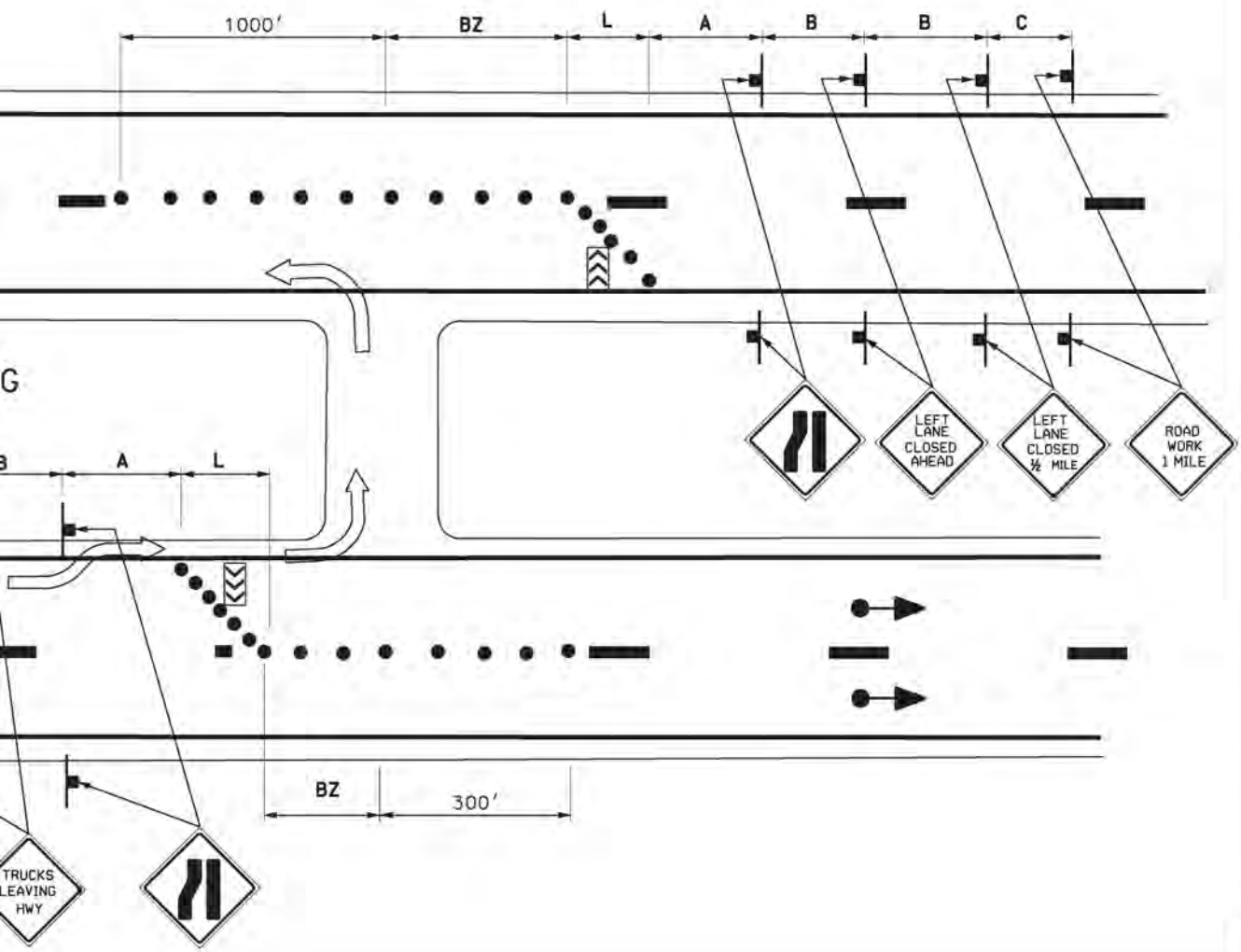


REVISIONS

| NO. | DATE | APPR. | REMARKS |
|---|---|---|---|
| | | | |

PORTATION
: CONSTRUCTION

S:
RECOMME — JAN.01.2005 DATE
CHAIRMA APPROVE — DATE
DEPUTY DIRECTOR — JAN.01.2005 DATE

TRAFFIC CONTROL
EXPRESSWAY AND
FREEWAY CROSSOVER/
TURN AROUND

STANDARD DRAWING TITLE

STD DWG
TC 10

# TRAFFIC CONTROL FOR

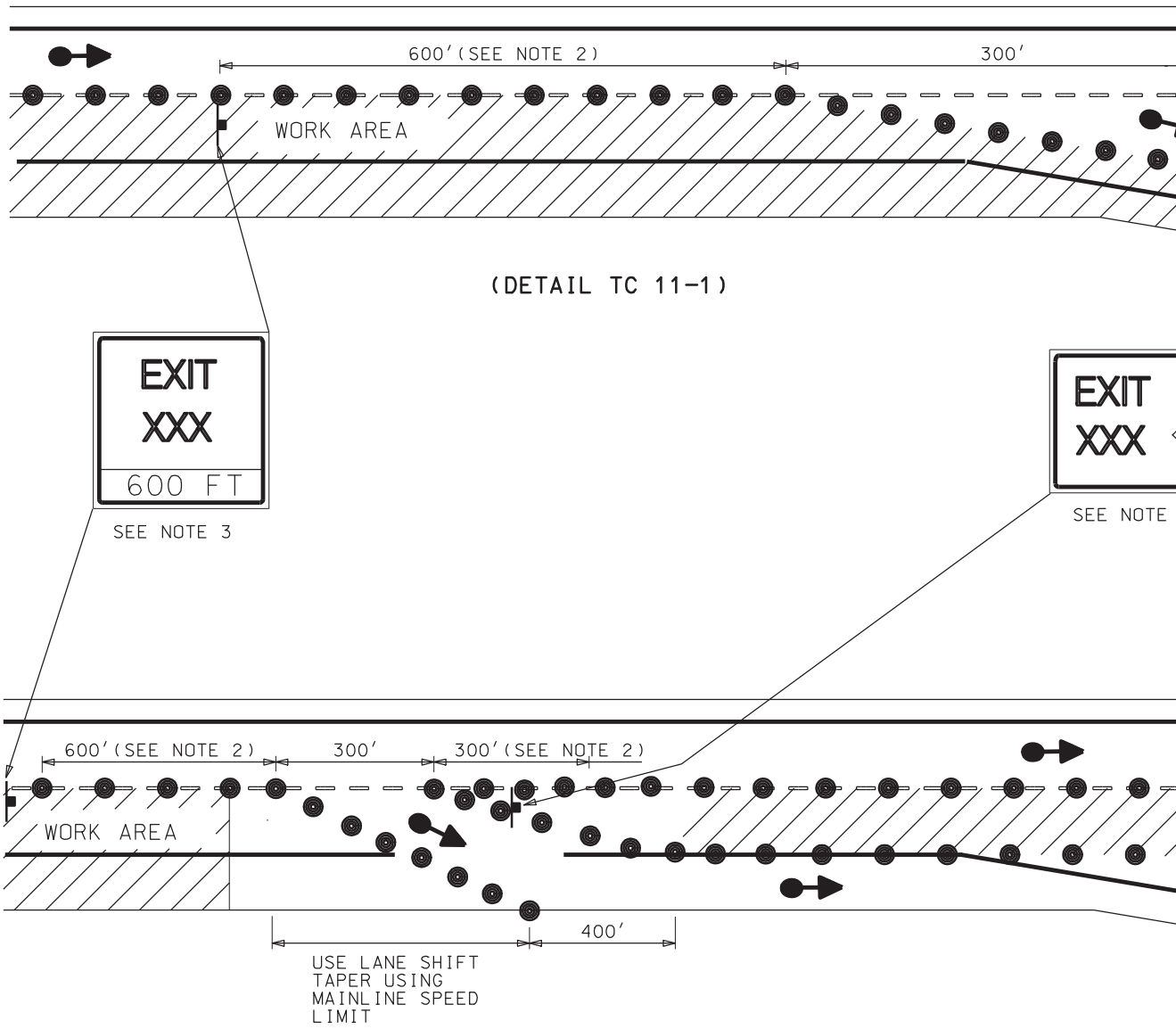


25-JAN-2005 DGN File:N:\Esd\Standard.Drawings\Imperial\2005Approved\Traffic Control (TC)\tc11.dgn

# R EXIT RAMP GORE

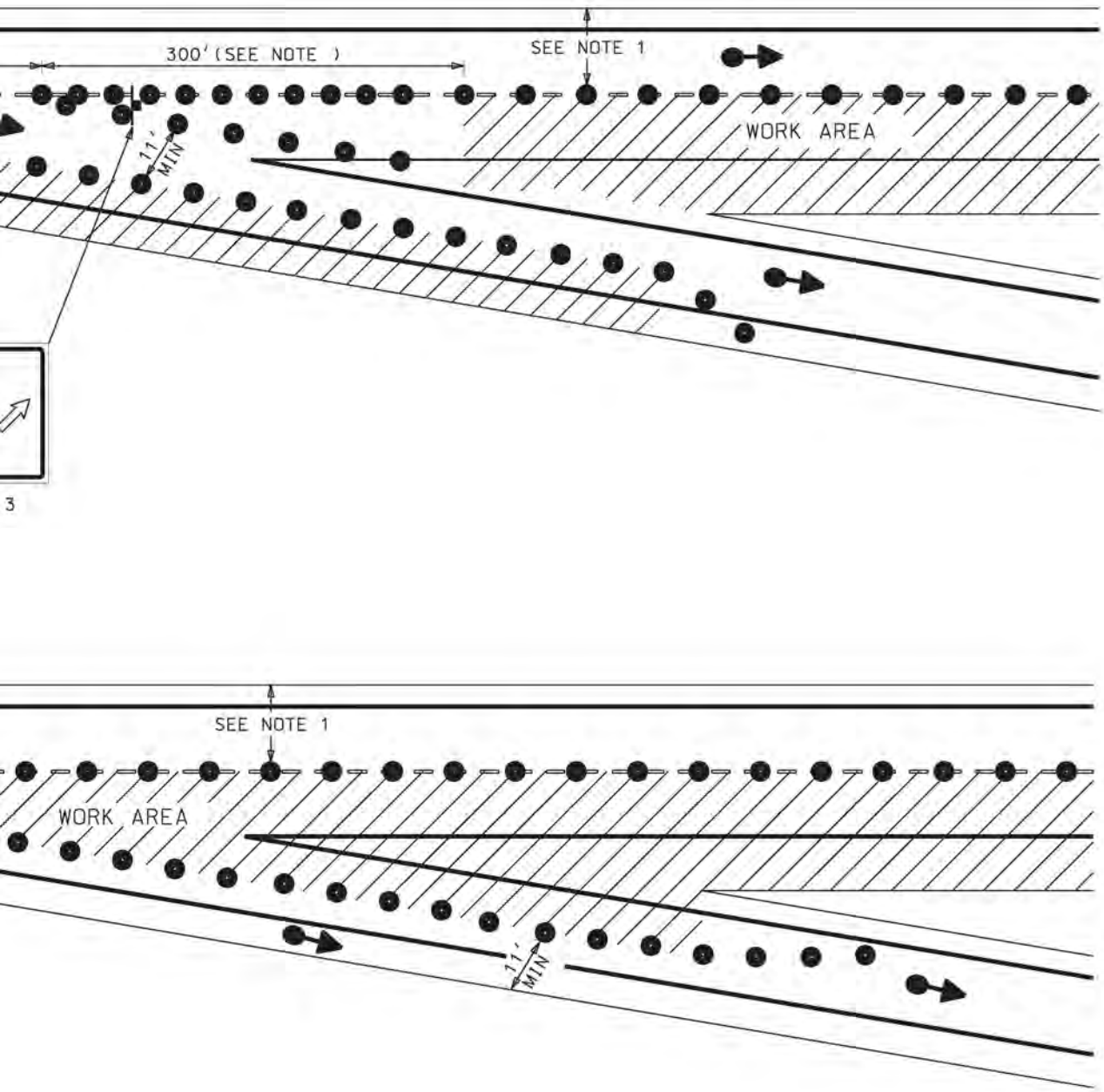


**NOTES:**

1. MAINTAIN 12' TRAVEL LANE AND 2' SHOULDER WIDTHS.
2. USE CHANNELIZING DEVICES SPADED AT 50'.
3. SEE STD DWG TC 1B.

REVISIONS

| NO. | DATE | APPR. | REMARKS |
|---|---|---|---|
| | | | |

PORTATION
CONSTRUCTION

RECOMME — JAN.01,2005 DATE
CHAIRMA APPROVE — JAN.01,2005 DATE
DEPUTY DIRECTOR

TRAFFIC CONTROL
EXIT RAMP GORE

STANDARD DRAWING TITLE

STD DWG
TC 11

# TRAFFIC CONTROL FOR

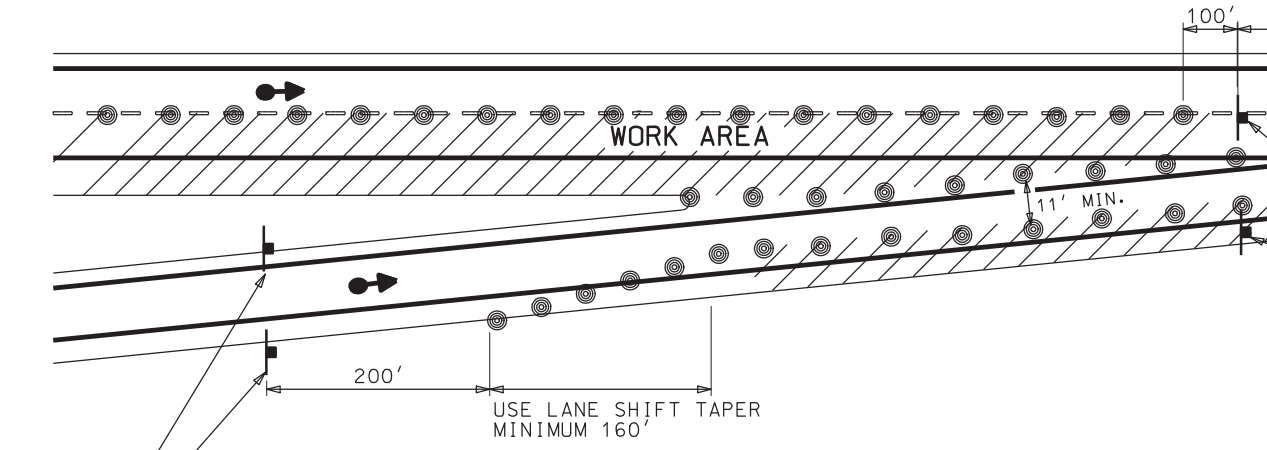


(DETAIL TC 12-1)

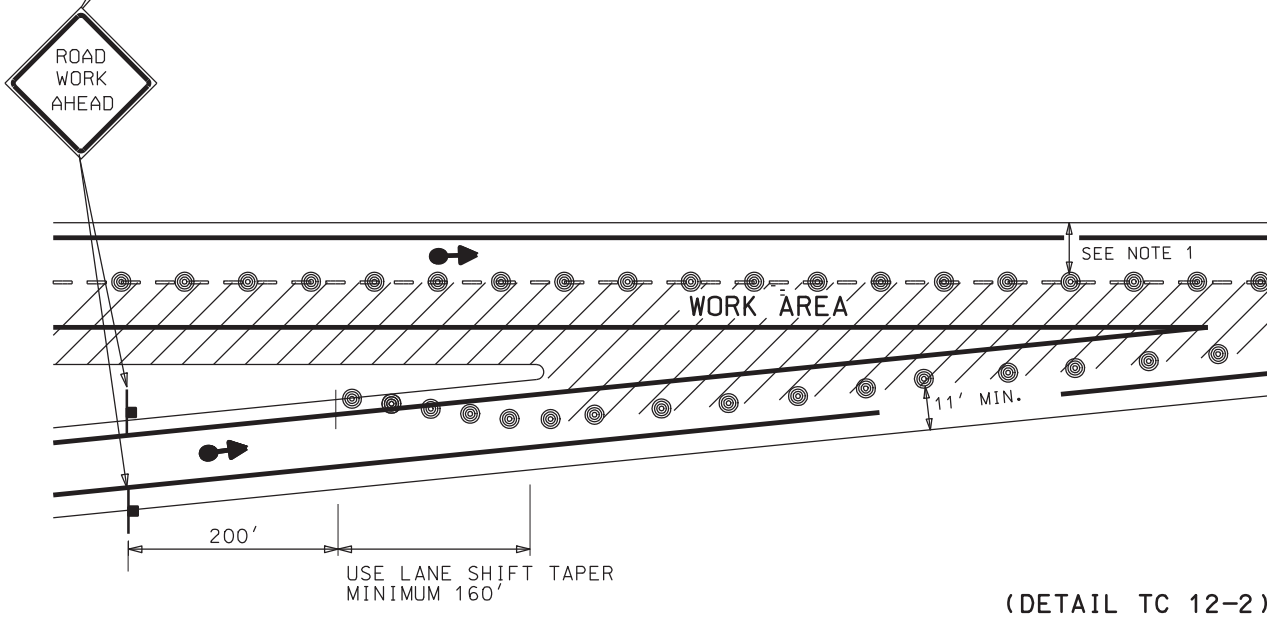


(DETAIL TC 12-2)

DGN File: N:\Esd\Standard Drawings\Imperial\2005Approved\Traffic Control (TC)\tc12.dgn
25-JAN-2005

# ENTRANCE RAMP GORE

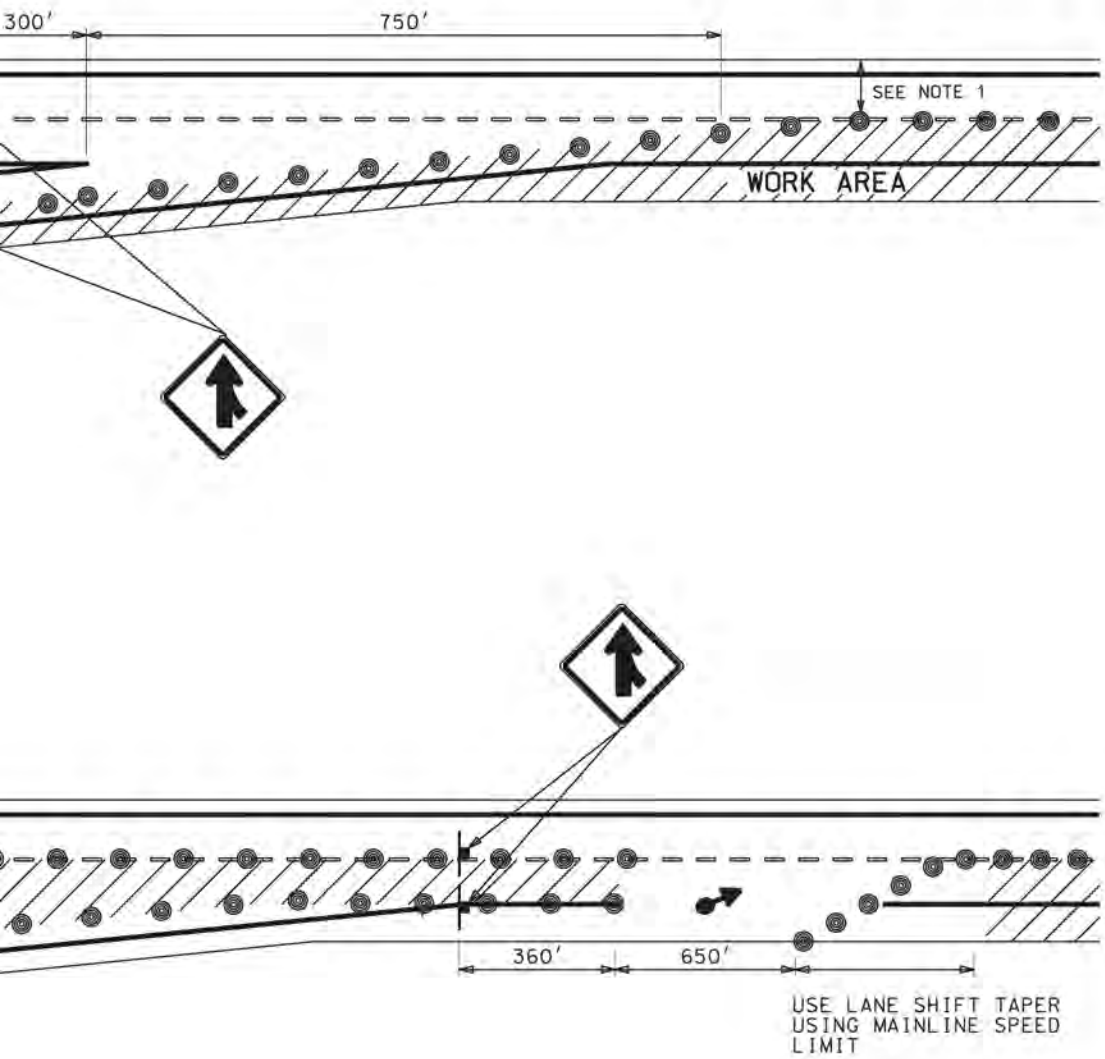


NOTE :

1. MAINTAIN 12' TRAVEL LANE AND 2' SHOULDER WIDTHS.

REVISIONS

| NO. | DATE | APPR. | REMARKS |
|---|---|---|---|
| | | | |

PORTATION
CONSTRUCTION

RECOMME — JAN.01,2005 DATE

CHAIRMA APPROVE — JAN.01,2005 DATE

DEPUTY DIRECTOR

STANDARD DRAWING TITLE

TRAFFIC CONTROL
ENTRANCE RAMP GORE

STD DWG
TC 12

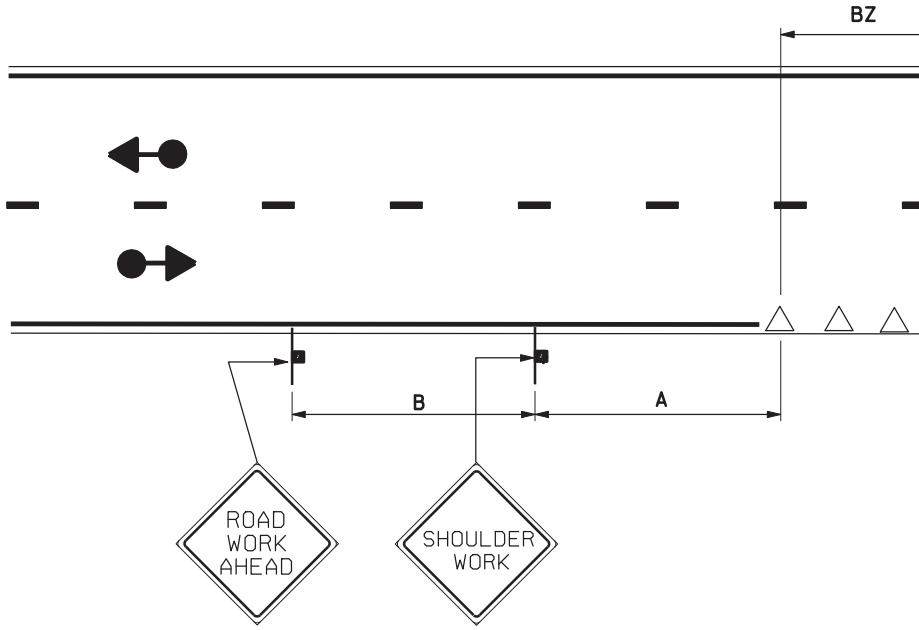


SHOULDE

(DETAI

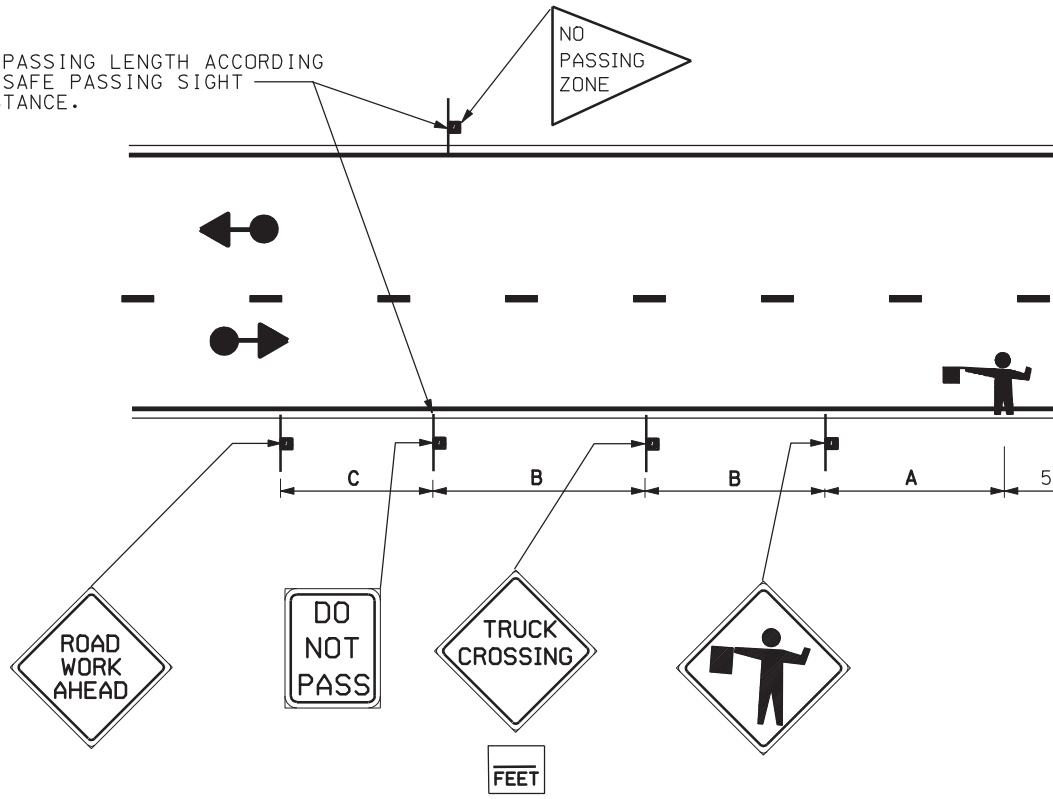

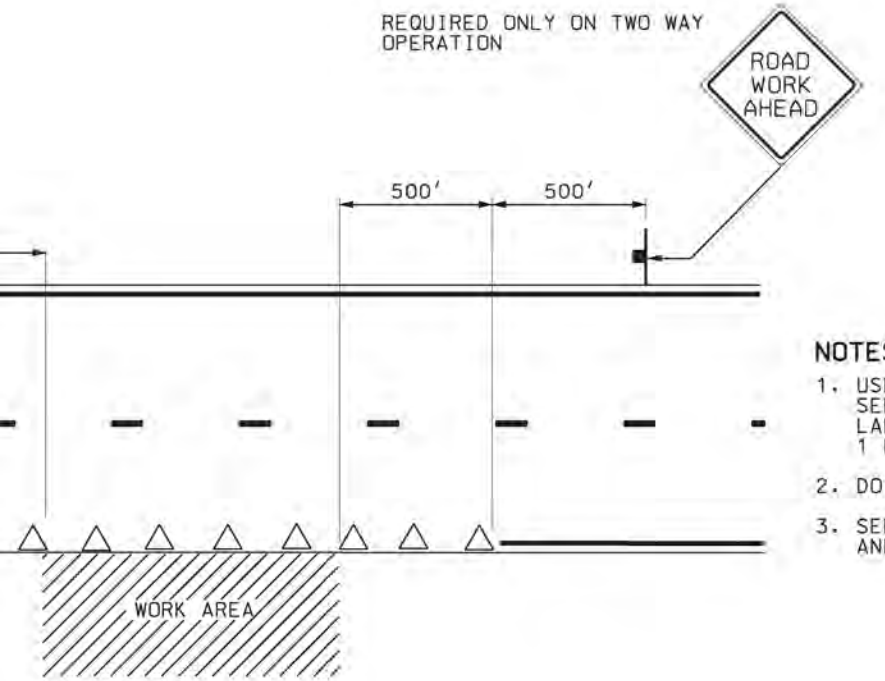


**NOTES: DETAIL TC 13-1**

1. USE CHANNELIZING DEVICES TO SEPARATE WORK ZONE FROM TRAVEL LANE WHEN WORK DURATION EXCEEDS 1 HOUR.
2. DO NOT ENCROACH INTO LANES.
3. SEE STD DWG TC 2B FOR TAPER, BUFFER, AND SIGN SPACING CHART.

ER OPERATION
L TC 13-1)

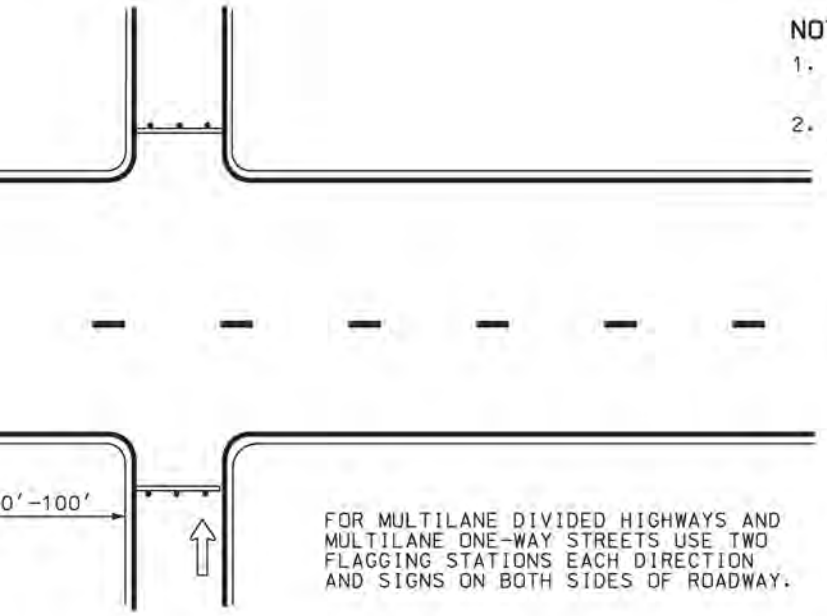


**NOTES: DETAIL TC 13-2**

1. INSTALL TYPE III BARRICADES WHEN HAUL ROAD IS NOT IN USE.
2. SEE STD DWG TC 2B FOR TAPER, BUFFER, AND SIGN SPACING CHART.

USE SAME SIGN SEQUENCE AND SPACING FOR OPPOSITE DIRECTION OF TRAFFIC.

FOR MULTILANE DIVIDED HIGHWAYS AND MULTILANE ONE-WAY STREETS USE TWO FLAGGING STATIONS EACH DIRECTION AND SIGNS ON BOTH SIDES OF ROADWAY.

HAUL ROAD OPERATION-TWO WAY
(DETAIL TC 13-2)

REVISIONS

| NO. | DATE | APPR. | REMARKS |
|---|---|---|---|

PORTATION
CONSTRUCTION

RECOMME — JAN.01,2005 DATE
CHAIRMA APPROVE — JAN.01,2005 DATE
DEPUTY DIRECTOR

TRAFFIC CONTROL
SHOULDER-HAUL ROAD

STANDARD DRAWING TITLE

STD DWG
TC 13

## NOTES:

1. USE A FLAGGER AT ALL INTERSECTING ROADWAYS. REFER TO STANDARD SPECIFICATION 01554 FOR REQUIREMENT AT OPERATING TRAFFIC SIGNALS.
2. PROVIDE FLAGGING IF TURNING TRAFFIC CONFLICTS WITH ONE WAY TRAFFIC.
3. PROVIDE A DETOUR WHEN ROAD CLOSURE EXCEEDS 24 HOURS.
4. SEE STD DWG TC 2B FOR TAPER, BUFFER ZONE, AND SIGN SPACING CHART.

USE SAM
& FLAGG

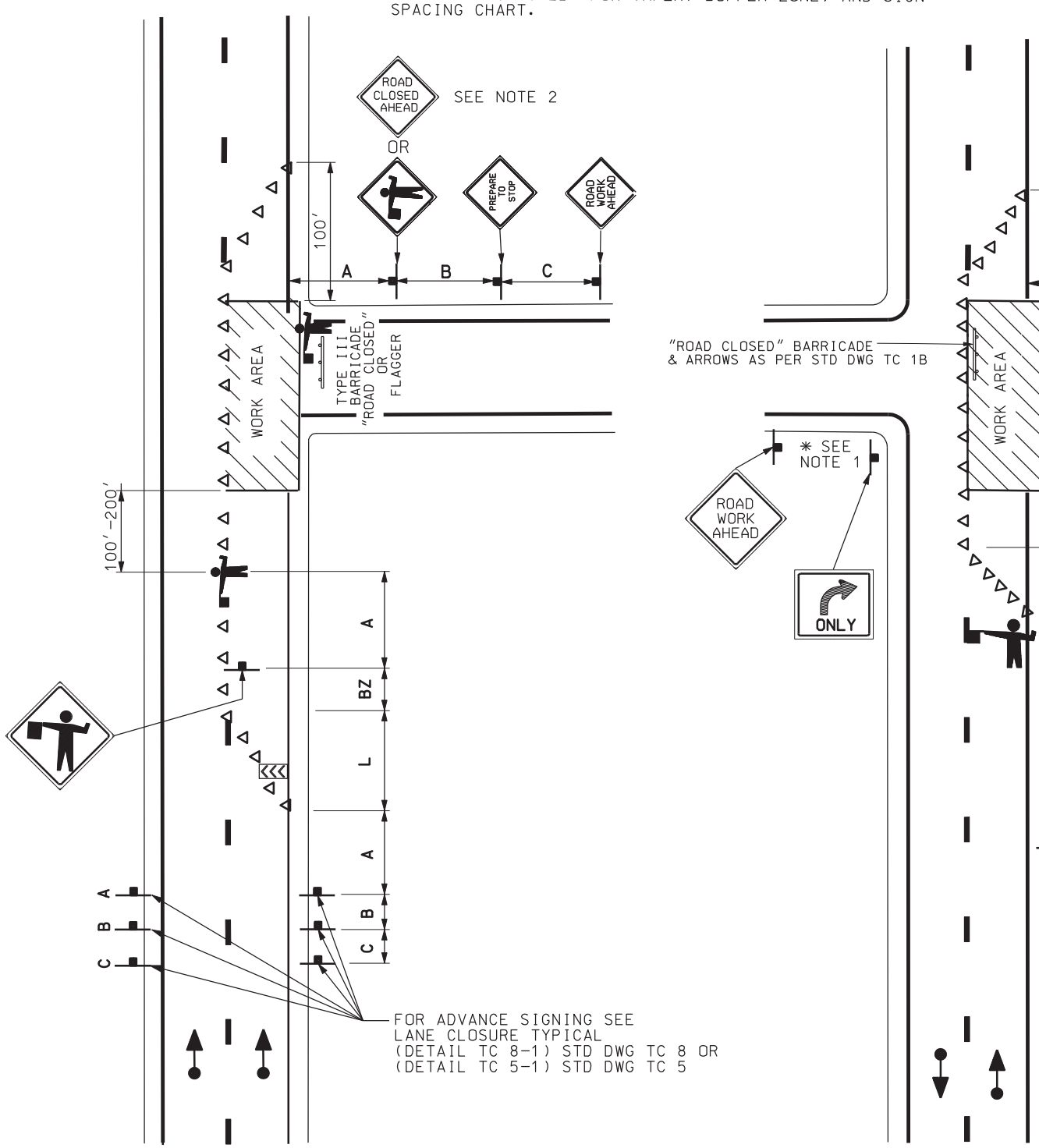


FLAGGING OPERATION - ONE WAY WITH POTENTIAL ENCROACHMENT BY WORK VEHICLE

(DETAIL TC 14-1)

FLAGGING OPERATION
WITH ONE LANE

(DETAIL TC 14

DGN File: N:\Esd\Standard Drawings\Imperial\2005Approved\Traffic Control (TC)\tc14.dgn

25-JAN-2005

E SIGN SEQUENCE, SPACING,
ER FOR OPPOSITE DIRECTION OF TRAFFIC.

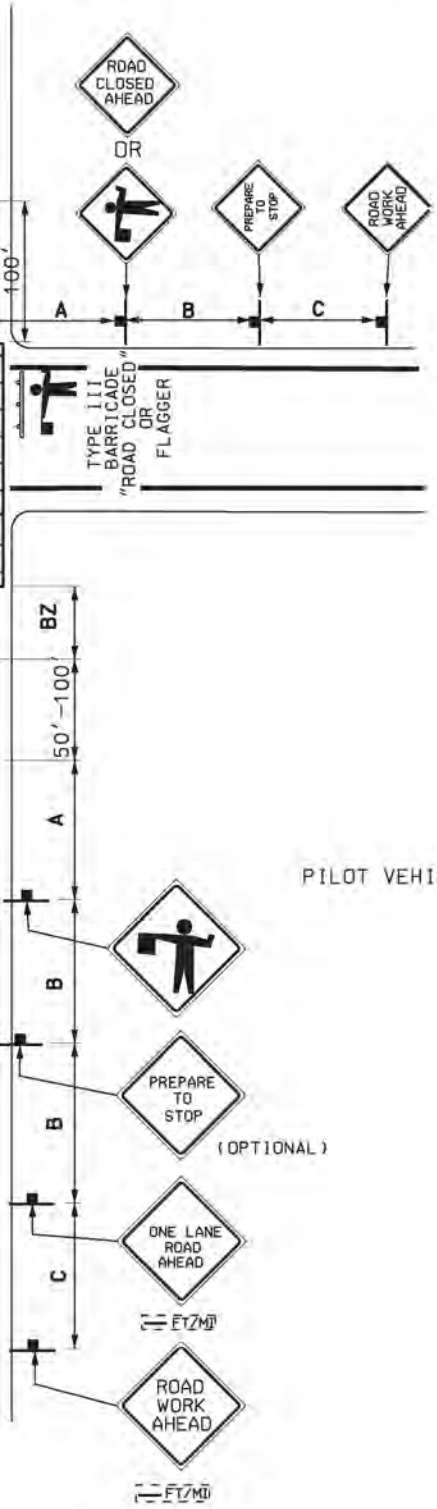


– TWO WAY
CLOSED
1-2)

USE SAME SIGN SEQUENCE, SPACING,
& FLAGGER FOR OPPOSITE DIRECTION OF TRAFFIC.

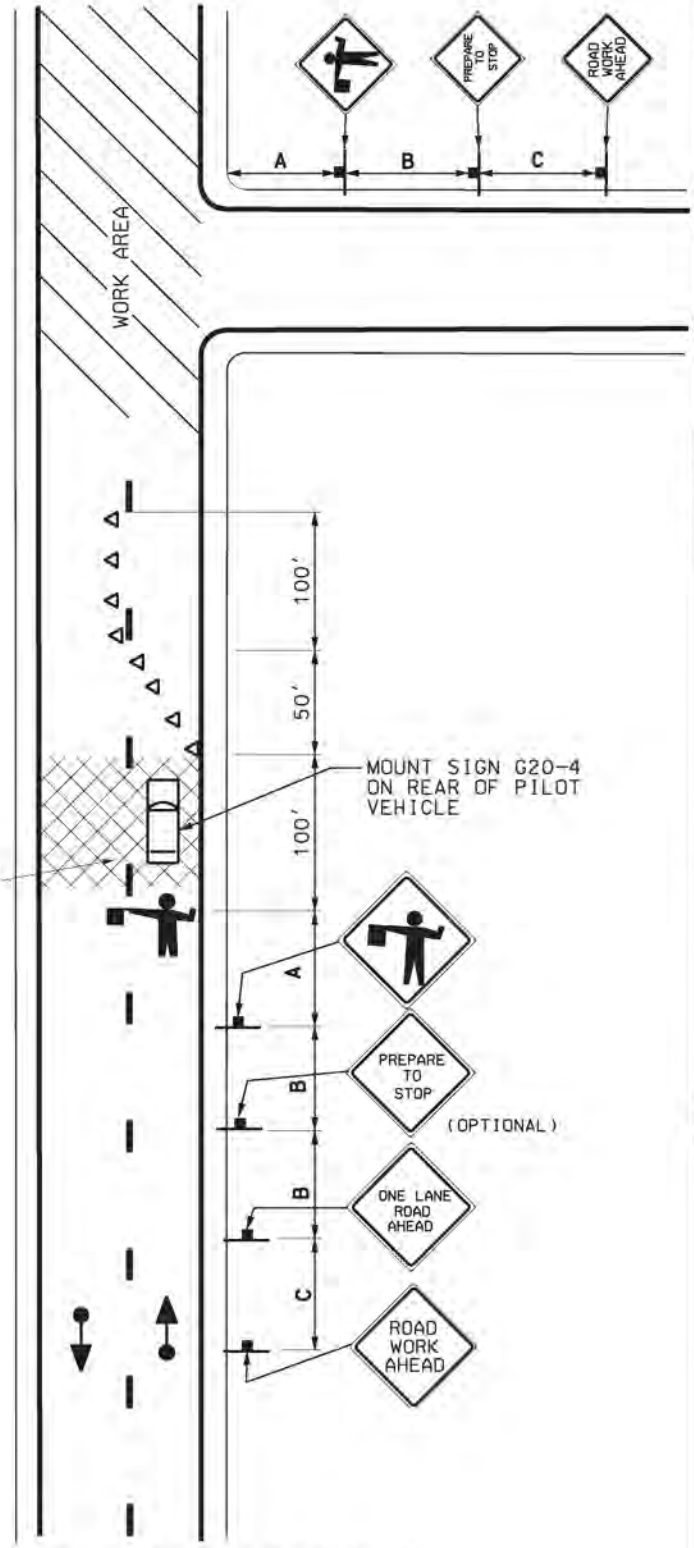


FLAGGING OPERATIONS
WITH USE OF PILOT VEHICLE
(DETAIL TC 14-3)

REVISIONS

| NO. | DATE | APPR. | REMARKS |
|---|---|---|---|
| | | | |

PORTATION
: CONSTRUCTION

RECOMME — JAN.01,2005 DATE

CHAIRMA APPROVE — JAN.01,2005 DATE

DEPUTY DIRECTOR

TRAFFIC CONTROL
FLAGGING OPERATION

STANDARD DRAWING TITLE

STD DWG
TC 14

# PROJECT SIGNING
# 2 LANE-2 WAY

SAME SEQUENCE AND SPACING
REQUIRED FOR OPPOSITE
DIRECTION OF TRAFFIC.

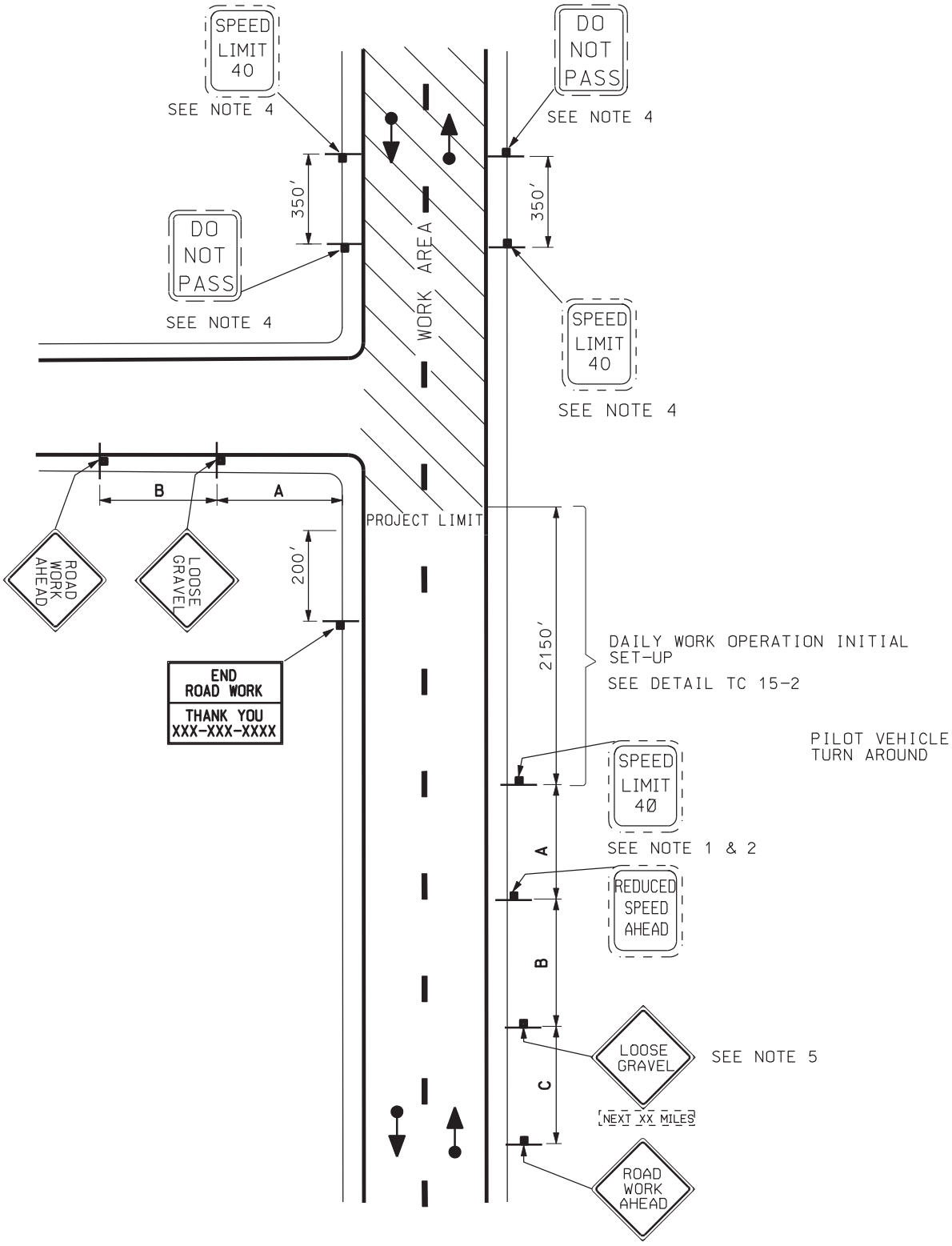


(DETAIL TC 15-1)

# DAILY WO
# 2 LA

SAME SIGN
AND FLAGGE
OPPOSITE

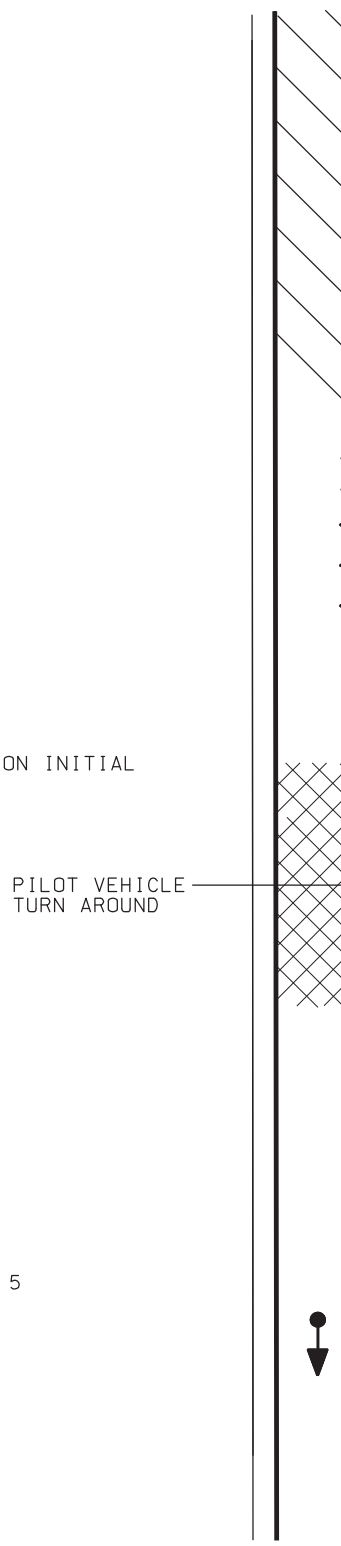


FLAGGING/
OPE
(DETA

DGN File:N:\Esd\Standard Drawings\Imperial\2005Approved\Traffic Control (TC)\tc15.dgn

25-JAN-2005

ORK OPERATION
ANE-2 WAY

SEQUENCE, SPACING
ER REQUIRED FOR
DIRECTION OF TRAFFIC.

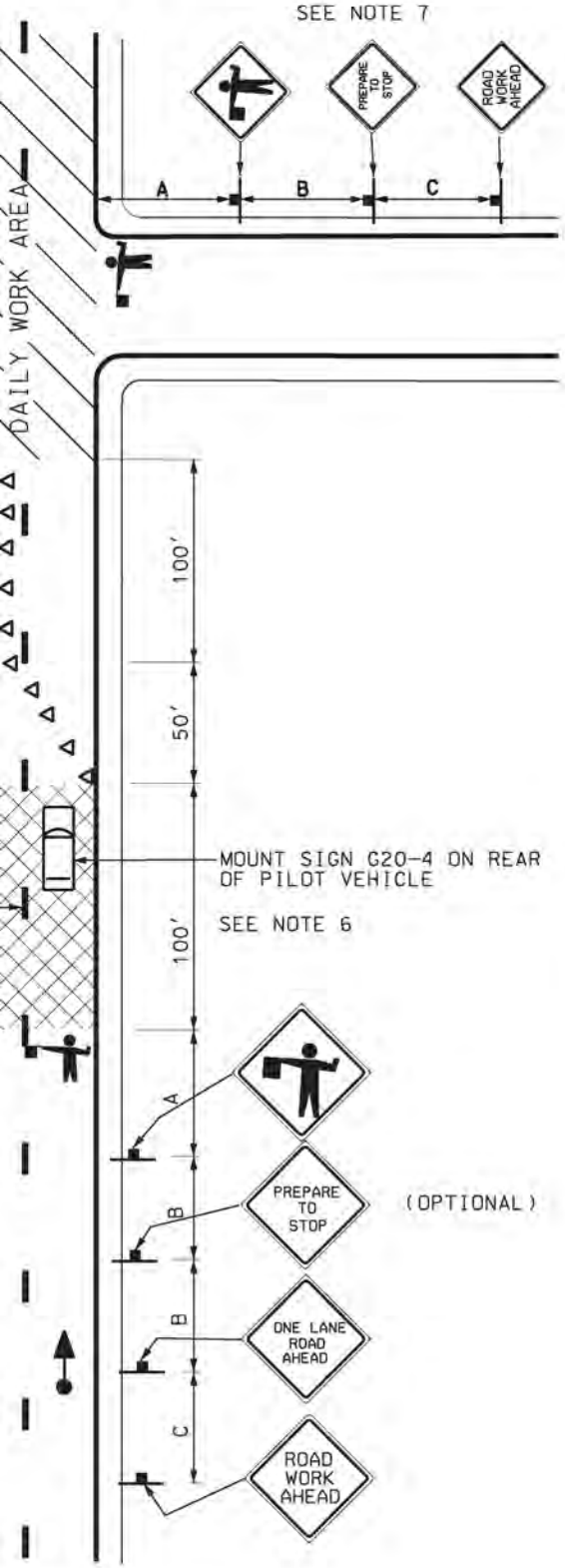


PILOT VEHICLE
RATION
IL TC 15-2)

## NOTES:

1. ESTABLISH A REDUCED SPEED LIMIT OF 40 MPH FOR SEAL COAT AND COVER MATERIAL OPERATIONS WHEN SPEEDS ARE GREATER THAN 40 MPH.
2. "REDUCED SPEED AHEAD" AND "SPEED LIMIT" SIGNING NOT REQUIRED WHEN EXISTING SPEED LIMITS ARE 40 MPH OR LESS.
3. MOVE DAILY WORK OPERATION SIGNING, DETAIL TC 15-2, AS WORK PROGRESSES.
4. PLACE "DO NOT PASS" AND "SPEED LIMIT" SIGNS AT 1 MILE INTERVALS THROUGH THE PROJECT AND AT MAJOR INTERSECTIONS.
5. PLACE "LOOSE GRAVEL" SIGN WITH APPROPRIATE DISTANCE MESSAGE ½ WAY THROUGH THE PROJECT IF PROJECT LENGTH IS BETWEEN 5 MILES AND 10 MILES. REPEAT EVERY 4 MILES ON LONGER PROJECTS.
6. PILOT VEHICLE NOT TO EXCEED SPEED OF 25 MPH.
7. USE A FLAGGER AT ALL INTERSECTING ROADWAYS DURING DAILY WORK OPERATIONS. REFER TO STANDARD SPECIFICATION 01554 FOR REQUIREMENTS AT OPERATING TRAFFIC SIGNALS.
8. CONTINUE FLAGGING AND PILOT VEHICLE OPERATIONS UNTIL THE ENGINEER OR THEIR REPRESENTATIVE ALLOWS FREE FLOW TRAFFIC TO PROCEED.
9. SEE STD DWG TC 2B FOR TAPER, BUFFER, AND SIGN SPACING CHART.

REVISIONS

| NO. | DATE | APPR. | REMARKS |
|---|---|---|---|
| | | | |

PORTATION
CONSTRUCTION

RECOMME — JAN.01,2005 DATE
CHAIRMA APPROVE — JAN.01,2005 DATE
DEPUTY DIRECTOR

TRAFFIC CONTROL
2 LANE/ 2 WAY
SEAL COAT WITH
COVER MATERIAL

STANDARD DRAWING TITLE

STD DWG
TC 15

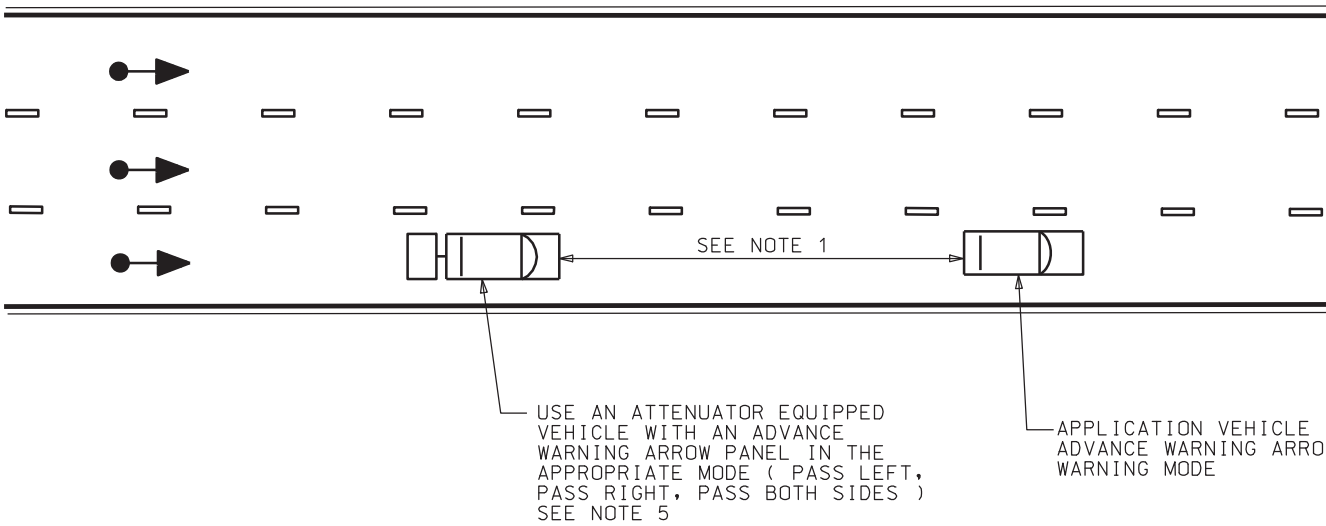


MULTILANE
LANE LINES & SHOULDER
(DETAIL TC 16-1)

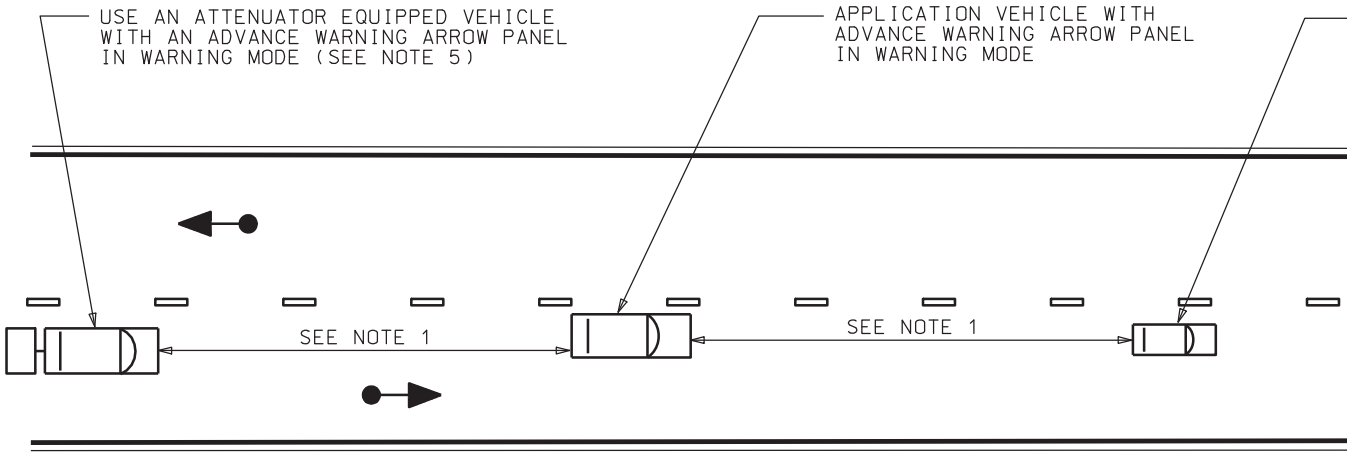


TWO LANE-TWO WAY
CENTER & SHOULDER
(DETAIL TC 16-2)

DGN File:N:\Esd\Standard_Drawings\Imperial\2005Approved\Traffic Control (TC)\tc16.dgn
25-JAN-2005

WITH
W PANEL

— LEAD VEHICLE WITH ADVANCE
WARNING ARROW PANEL IN WARNING
MODE FOR APPROACHING TRAFFIC

## NOTES:

1. DO NOT EXCEED 300' SPACING BETWEEN THE APPLICATING TRUCK AND THE FOLLOW OR LEAD VEHICLE.
2. NO STATIC SIGNS ARE REQUIRED WITH THESE OPERATIONS.
3. ALL EQUIPMENT TO HAVE ROTARY STROBE LIGHTS AND EMERGENCY FLASHERS IN OPERATION.
4. USE TYPE B ADVANCED WARNING ARROW PANEL. SEE STD DWG TC 1A.
5. USE NCHRP-350 APPROVED TRUCK MOUNTED ATTENUATOR (TMA) MEETING THE REQUIREMENTS FOR THE POSTED SPEED LIMIT.

   TL-2 RATED SYSTEM FOR SPEEDS 45 ≤ MPH.
   TL-3 RATED SYSTEM FOR SPEEDS 50 ≥ MPH.

REVISIONS

| NO. | DATE | APPR. | REMARKS |
|---|---|---|---|
| | | | |

PORTATION
: CONSTRUCTION

S:

RECOMME — JAN.01.2005 DATE

CHAIRMA APPROVE — JAN.01.2005 DATE

DEPUTY DIRECTOR

STANDARD DRAWING TITLE

TRAFFIC CONTROL
PAVEMENT MARKING

STD DWG

TC 16